SPECIFICATIONS
(FOR CONSTRUCTION CONTRACT)

Solicitation No. W9128F-04-B-0002

Consolidated Lodging Facility Phase Four

Minneapolis St. Paul – International Airport
Air Force Reserve Station, MN

December 2003

US Army Corps of Engineers
Omaha District

This page was intentionally left blank for duplex printing.

CONSOLIDATED LODGING FACILITY
PHASE FOUR
MINNEAPOLIS ST PAUL - INTERNATIONAL AIRPORT AIR FORCE RESERVE STATION, MN

PROJECT TABLE OF CONTENTS

CONTRACT REQUIREMENTS

00010 Solicitation, Offer and Award (SF-1442)
00100 Instructions, Conditions & Notices to Bidders
00600 Representations, Certifications & Other Statements of Bidders
00700 Contract Clauses
00800 Special Contract Requirements

DIVISION 01 - GENERAL REQUIREMENTS

01030 BID OPTIONS
01040 AS-BUILT DRAWINGS
01090 SOURCES FOR REFERENCE PUBLICATIONS
01200 WARRANTY OF CONSTRUCTION
01330 SUBMITTAL PROCEDURES
01355 ENVIRONMENTAL PROTECTION
01400 SPECIAL SAFETY REQUIREMENTS FOR DEMOLITION AND RENOVATION
01451A CONTRACTOR QUALITY CONTROL
01500 TEMPORARY CONSTRUCTION FACILITIES

DIVISION 02 - SITE WORK

02220 DEMOLITION
02230 CLEARING AND GRUBBING
02300 EARTHWORK
02315 EXCAVATION, FILLING AND BACKFILLING FOR BUILDINGS
02316 EXCAVATION, TRENCHING, AND BACKFILLING FOR UTILITIES SYSTEMS
02531 SANITARY SEWERS
02722 AGGREGATE AND/OR GRADED-CRUSHED AGGREGATE BASE COURSE
02741 BITUMINOUS PAVING FOR ROADS, STREETS AND OPEN STORAGE AREAS
02748 BITUMINOUS TACK COAT
02763 PAVEMENT MARKINGS
02770 CONCRETE SIDEWALKS AND CURBS AND GUTTERS
02811 UNDERGROUND SPRINKLER SYSTEMS
02821 FENCING
02921 SEEDING
02922 SODDING
02930 EXTERIOR PLANTING

DIVISION 03 - CONCRETE

03101 STRUCTURAL CONCRETE FORMWORK
03150 EXPANSION JOINTS AND CONTRACTION JOINTS
03200 CONCRETE REINFORCEMENT
03300 CAST-IN-PLACE STRUCTURAL CONCRETE
03410 PRECAST/PRESTRESSED CONCRETE FLOOR AND ROOF UNITS
03413 PRECAST ARCHITECTURAL CONCRETE

DIVISION 04 - MASONRY

04200 MASONRY
04220 NONBEARING MASONRY VENEER/STEEL STUD WALLS

DIVISION 05 - METALS

05120 STRUCTURAL STEEL
05400 COLD-FORMED STEEL FRAMING
05500 MISCELLANEOUS METAL

DIVISION 06 - WOODS & PLASTICS

06100 ROUGH CARPENTRY
06200 FINISH CARPENTRY

DIVISION 07 - THERMAL & MOISTURE PROTECTION

07110 BITUMINOUS DAMPPROOFING
07220 ROOF INSULATION
07413 METAL SIDING
07421 COMPOSITE METAL BUILDING PANELS
07530 ELASTOMERIC ROOFING (EPDM)
07600 SHEET METALWORK, GENERAL
07810 SPRAY-APPLIED FIREPROOFING
07840 FIRESTOPPING
07900 JOINT SEALING

DIVISION 08 - DOORS & WINDOWS

08110 STEEL DOORS AND FRAMES
08120 ALUMINUM STOREFRONT AND ENTRANCES
08210 WOOD DOORS
08520 ALUMINUM WINDOWS
08700 BUILDERS' HARDWARE
08810 GLASS AND GLAZING

DIVISION 09 - FINISHES

09250 GYPSUM WALLBOARD
09310 CERAMIC TILE
09510 ACOUSTICAL CEILINGS
09650 RESILIENT FLOORING
09680 CARPET
09900 PAINTING, GENERAL
09915 COLOR SCHEDULE

DIVISION 10 - SPECIALTIES

10214 EXTERIOR LOUVERS
10260 WALL AND CORNER PROTECTION
10440 INTERIOR SIGNAGE
10522 FIRE EXTINGUISHERS, CABINETS AND ACCESSORIES
10800 TOILET ACCESSORIES

DIVISION 13 - SPECIAL CONSTRUCTION

13280A ASBESTOS ABATEMENT
13286N HANDLING OF LIGHTING BALLASTS AND LAMPS CONTAINING PCBs AND MERCURY
13851 FIRE DETECTION AND ALARM SYSTEM, ADDRESSABLE
13930 WET PIPE SPRINKLER SYSTEM, FIRE PROTECTION

DIVISION 15 - MECHANICAL

15080 THERMAL INSULATION FOR MECHANICAL SYSTEMS
15400 PLUMBING, GENERAL PURPOSE
15653 AIR-CONDITIONING SYSTEM (UNITARY TYPE)
15895 AIR SUPPLY, DISTRIBUTION, VENTILATION, AND EXHAUST SYSTEM
15950 HVAC SEQUENCE OF OPERATION
15951 DIRECT DIGITAL CONTROL FOR HVAC
15990 TESTING, ADJUSTING, AND BALANCING OF HVAC SYSTEMS
15995 COMMISSIONING OF HVAC SYSTEMS

DIVISION 16 - ELECTRICAL

16120 INSULATED WIRE AND CABLE
16403 SWITCHBOARDS AND PANELBOARDS
16415 ELECTRICAL WORK, INTERIOR
16528 EXTERIOR LIGHTING INCLUDING SECURITY AND CCTV APPLICATIONS
16710 PREMISES DISTRIBUTION SYSTEM

-- End of Project Table of Contents --

This page was intentionally left blank for duplex printing.

SOLICITATION, OFFER, AND AWARD (Construction, Alteration, or Repair)	1. SOLICITATION NO.	2. TYPE OF SOLICITATION	3. DATE ISSUED	PAGE OF PAGES
	W9128F-04-B-0002	☒ SEALED BID (IFB) ☐ NEGOTIATED (RFP)	12 Dec 2003	1 of 3

IMPORTANT - The "offer" section on the reverse must be fully completed by offeror.

4. CONTRACT NO.	5. REQUISITION/PURCHASE REQUEST NO.	6. PROJECT NO.

7. ISSUED BY CODE CT

U S ARMY ENGINEER DISTRICT, OMAHA
106 SOUTH 15TH STREET
OMAHA, NE 68102-1618

8. ADDRESS OFFER TO

US ARMY CORPS OF ENGINEERS
Attn: CONTRACTING DIVISION (CENWO-CT)
106 SOUTH 15TH STREET
OMAHA, NE 68102-1618

9. FOR INFORMATION CALL:	A. NAME	B. TELEPHONE NO. (Include area code) (NO COLLECT CALLS)
▶	Kevin McElroy	(402) 221-4108

SOLICITATION

NOTE: In sealed bid solicitations "offer" and "offeror" mean "bid" and "bidder".

10. THE GOVERNMENT REQUIRES PERFORMANCE OF THE WORK DESCRIBED IN THESE DOCUMENTS (Title, identifying no., date):

The offeror hereby agrees to do all the work described in these documents entitled:

Consolidated Lodging Facility
Phase Four
Minneapolis St. Paul - International Airport Air Force Reserve Station, MN.

RETURN WITH PROPOSAL: INFORMATION REQUIRED BY; SECTION 00010 (SF1442); AND SECTION 00600
OTHER BONDING INFORMATION: SEE CONTRACT CLAUSES CLAUSE "PERFORMANCE AND PAYMENT BONDS".

11. The Contractor shall begin performance within 10 calendar days and complete it within 360 calendar days after receiving

☐ award, ☒ notice to proceed. This performance period is ☒ mandatory, ☐ negotiable. (See _____ .)

12A. THE CONTRACTOR MUST FURNISH ANY REQUIRED PERFORMANCE AND PAYMENT BONDS? (If "YES," indicate within how many calendar days after award in Item 12B.)	12B. CALENDAR DAYS
☒ YES ☐ NO	

13. ADDITIONAL SOLICITATION REQUIREMENTS:

A. Sealed offers in original and 0 copies to perform the work required are due at the place specified in Item 8 by 1400 (hour) local time 12 Jan 2004 (date). If this is a sealed bid solicitation, offers must be publicly opened at that time. Sealed envelopes containing offers shall be marked to show the offeror's name and address, the solicitation number, and the date and time offers are due.

B. An offer guarantee ☐ is, ☒ is not required.

C. All offers are subject to the (1) work requirements, and (2) other provisions and clauses incorporated in the solicitation in full text or by reference.

D. Offers providing less than 60 calendar days for Government acceptance after the date offers are due will not be considered and will be rejected.

14. NAME AND ADDRESS OF OFFEROR (Include ZIP Code)	15. TELEPHONE NO. (Include area code)
DUNS Number:_____	16. REMITTANCE ADDRESS (Include only if different than Item 14)
CODE FACILITY CODE	

17. The offeror agrees to perform the work required at the prices specified below in strict accordance with the terms of this solicitation, if this offer is accepted by the Government in writing within 60 calendar days after the date offers are due. (Insert any number equal to or greater than the minimum requirement stated in Item 13D. Failure to insert any number means the offeror accepts the minimum in Item 13D.)

AMOUNTS ▶ See Attached Bidding Schedule

Contractor's Fax No._____ CAGE Code:_____

Contractor's e-mail Address:_____

18. The offeror agrees to furnish any required performance and payment bonds.

19. ACKNOWLEDGMENT OF AMENDMENTS

(The offeror acknowledges receipt of amendments to the solicitation - give number and date of each)

AMENDMENT NO.										
DATE										

20A. NAME AND TITLE OF PERSON AUTHORIZED TO SIGN OFFER (Type or print)	20B. SIGNATURE	20C. OFFER DATE

AWARD (To be completed by Government)

21. ITEMS ACCEPTED:

22. AMOUNT	23. ACCOUNTING AND APPROPRIATION DATA

24. SUBMIT INVOICES TO ADDRESS SHOWN IN (4 copies unless otherwise specified) ▶	ITEM 26	25. OTHER THAN FULL AND OPEN COMPETITION PURSUANT TO ☐ 10 U.S.C. 2304(c) ( ) ☐ 41 U.S.C. 253(c) ( )

26. ADMINISTERED BY CODE	27. PAYMENT WILL BE MADE BY
US ARMY ENGINEER DISTRICT, OMAHA 106 SOUTH 15TH STREET OMAHA, NE 68102-1618	USAED OMAHA C/O USACE FINANCE CENTER 5722 INTEGRITY DRIVE MILLINGTON, TN 38054-5005

CONTRACTING OFFICER WILL COMPLETE ITEM 28 OR 29 AS APPLICABLE

☐ 28. NEGOTIATED AGREEMENT (contractor is required to sign this document and return_____ copies to issuing office.) Contractor agrees to furnish and deliver all items or perform all work, requisitions identified on this form and any continuation sheets for the consideration stated in this contract. The rights and obligations of the parties to this contract shall be governed by (a) this contract award, (b) the solicitation, and (c) the clauses, representations, certifications, and specifications incorporated by reference in or attached to this contract.	☐ 29. AWARD (Contractor is not required to sign this document.) Your offer on this solicitation, is hereby accepted as to the items listed. This award consummates the contract, which consists of (a) the Government solicitation and your offer, and (b) this contract award. No further contractual document is necessary.
30A. NAME AND TITLE OF CONTRACTOR OR PERSON AUTHORIZED TO SIGN (Type or print)	31A. NAME OF CONTRACTING OFFICER (Type or print)

30B. SIGNATURE	30C. DATE	31B. UNITED STATES OF AMERICA BY	31C. AWARD DATE

STANDARD FORM 1442 BACK (REV. 4-85)

BIDDING SCHEDULE

Item No.	Description	Quantity	Unit	Amount
	BASIC			
1.	Entire work complete excluding options below.	Job	L.S.	$_____
	OPTIONS			
0-1	Asbestos Abatement for Building 711 and 715	Job	L.S.	$_____
0-2	Building Demolition for Buildings 711 & 716	Job	L.S.	$_____
O-3	Northwest Parking Lot Addition (Sitework)	Job	L.S.	$_____
O-4	Landscaping For Northwest Portion of Site (Sitework)	Job	L.S.	$_____

TOTAL AMOUNT (BASIC + OPTIONS) $_____
(in figures)

Notes:

1. See SECTION 00100, INSTRUCTIONS, CONDITIONS, & NOTICES TO BIDDERS for evaluation of options. The Government reserves the right to exercise the options within 120 days after issuance of Notice to Proceed.

2. Bid prices must be entered for all items of the schedule. Total amount bids submitted without bid prices being entered on individual items will be rejected. Additions will be subject to verification by the Government. In case of variation between the lump-sum prices and the total amount, the lump-sum prices will be considered the bid.

3. A modification to a bid which provides for a single adjustment to the total amount bid, should state the application of the adjustment to each respective lump-sum price affected. If the modification is not so apportioned, the single adjustment will be applied to Item No. 1.

This page was intentionally left blank for duplex printing.

SECTION 00100

INSTRUCTIONS, CONDITIONS & NOTICES TO BIDDERS
(July 2000, Revised November 2003)

INDEX

Attachments: Required Central Contractor Registration

1 GENERAL BIDDING INFORMATION
2 (FAR 52.214-6) EXPLANATION TO PROSPECTIVE BIDDERS (APRIL 1984).
3 RESERVED
4 (FAR 52.214-5) SUBMISSION OF BIDS (MAR 1997).
5 (FAR 52.214-18) PREPARATION OF BIDS - CONSTRUCTION (APRIL 1984).
6 (FAR 52.214-4) FALSE STATEMENTS IN BIDS (APRIL 1984).
7 (FAR 52.214-7) LATE SUBMISSIONS, MODIFICATIONS, AND WITHDRAWALS OF BIDS (NOV 1999).
8 INFORMATION FOR MODIFYING BIDS.
9 BID GUARANTEE.
10 PERFORMANCE AND PAYMENT BONDS.
11 (FAR 52.214-19) CONTRACT AWARD - SEALED BIDDING - CONSTRUCTION (AUG 1996).
12 NORTH AMERICAN CLASSIFICATION SYSTEM (NAICS).
13 SMALL BUSINESS SIZE STANDARD.
14 (FAR 52.214-3) AMENDMENTS TO INVITATIONS FOR BIDS (DECEMBER 1989).
15 CHANGES PRIOR TO OPENING BIDS.
16 (FAR 52.214-34) SUBMISSION OF OFFERS IN THE ENGLISH LANGUAGE (APR 1991)
17 (FAR 52.214-35) SUBMISSION OF OFFERS IN U.S. CURRENCY (APR 1991)
18 (EFARS 52.214-5000) ARITHMETIC DISCREPANCIES.
19 (FAR 52.217-5) EVALUATION OF OPTIONS (JUL 1990).
20 OPTIONS.
21 AVAILABILITY OF SPECIFICATIONS, STANDARDS, AND DESCRIPTIONS.
22 AVAILABLE PLANT.
23 EQUIPMENT OWNERSHIP AND OPERATING EXPENSE SCHEDULE.
24 NOTICE REGARDING BUY AMERICAN ACT.
25 (FAR 52.236-27) SITE VISIT (CONSTRUCTION) (FEB 1995).
26 BIDDER'S QUESTIONS AND COMMENTS.
27 (FAR 52.233-2) SERVICE OF PROTEST (AUG 1996).
28 PRE-AWARD SURVEY INFORMATION (Local Provision) (Sep 93)
29 DATA UNIVERSAL NUMBERING SYSTEM (DUNS) NUMBER
30 (FAR 52.216-1) TYPE OF CONTRACT (APR 1984).
31 SUBCONTRACTING PLAN/SUBCONTRACTING GOALS REGARDING THE UTILIZATION OF SMALL BUSINESS CONCERNS.

SECTION 00100

INSTRUCTIONS, CONDITIONS & NOTICES TO BIDDERS

1 GENERAL BIDDING INFORMATION

Bids shall be either mailed or hand-carried as indicated below. Bid will be PUBLICLY opened at the bid time indicated on Standard Form SF 1442 (Page 00010-1).

1.1 MAILED BIDS AND HAND-CARRIED BIDS

a. Mailed bids shall be addressed to the location as indicated on Standard Form SF 1442 (Page 00010-1), Item No. 8.

b. Due to heightened security at Government installations, those bidders who have their bids hand-carried* shall contact Kevin McElroy, Contract Specialist at (402) 221-4108 or (402) 221-4100 prior to delivering to the U. S. Army Corps of Engineer District, Omaha, 106 South 15th Street, Omaha, NE.

c. On the date specified and for thirty (30) minutes prior to time specified on Standard Form SF 1442, Page 00010-1, item 13.A, a Contracting representative will be in the lobby to receive bids. At the time specified on Standard SF 1442 Page 00010-1, item 13.A, the designated bid opening official will announce that receipt of bids is closed. Official time will be established by time/stamp clock located in the area where bids are received.

d. Anyone wishing to attend this public opening will be required to present photo identification to sign in and then will be escorted to the facility where bids will be opened. Once bids have been opened, read and recorded, attendees will then be escorted to exit the building.

e. **RETURN ADDRESS REQUIREMENTS**

Bidder(s) must ensure that **ALL** mail sent to the Omaha District, U.S. Army Corps of Engineers, either pre-contract or post-contract award, has a return mailing address on the outside of the envelope, package, box, etc. **ANY MAIL** addressed to the U.S. Army Corps of Engineers, including but not limited to bids, modifications to bids, proposals, revised proposals, bid guarantees, bonds, correspondence, etc., **will be REJECTED** by the US Army Corps of Engineers mail room facility located at 106 South Street, Omaha, Nebraska 68102-1618 if it does not contain a return mailing address. **There will be no exceptions.**

*This instruction shall also apply to those bids delivered through a delivery or parcel service.

1.2 SOLICITATION RESTRICTIONS

This solicitation is unrestricted and open to both large and small business participation.

1.3 BASIS FOR AWARD.

IT IS INTENDED THAT AWARD WILL BE MADE TO ONE BIDDER FOR THE ENTIRE WORK.

1.4 DESCRIPTION OF WORK

The scope of this project is to furnish all plant, labor, materials, and equipment and performing all work for The Consolidated Lodging Facility Phase IV which will include an approximately 2,000 square meter (21,480 square feet) expansion of the Consolidated Lodging Phase III West Wing. The facility will be a Four (4) Story load bearing masonry structure, slab on grade, using pre-cast hollow concrete floor planks and concrete floor topping. The exterior finishes are a combination of brick veneer, pre-cast architectural panels, glazing, and pre-finished metal panels. The roofing will be fully adhered EPDM single ply roof membrane. The facility will require extensions of the HVAC, Electrical, Communications, Fire Detection and Alarm System, Energy Monitoring and Control System, and Supervised Sprinkler System. The Phase IV will provide guestrooms, bathrooms, laundry area, and vending. The facility will require minor site demolition, utility connections, water line, storm sewers, sanitary sewers, communications lines, and power lines. Also included in the project are a small parking lot, sidewalks, and landscaping. Work shall be in accordance with plans and specifications issued with this solicitation.

1.5 ESTIMATED CONSTRUCTION COST

The estimated construction cost of this project is between $2,500,000 and $5,000,000.

2 (FAR 52.214-6) EXPLANATION TO PROSPECTIVE BIDDERS (APRIL 1984).

Any prospective bidder desiring an explanation or interpretation of the solicitation, drawings, specifications, etc., must request it in writing soon enough to allow a reply to reach all prospective bidders before the submission of their bids. Oral explanations or instructions given before the award of a contract will not be binding. Any information given a prospective bidder concerning a solicitation will be furnished promptly to all other prospective bidders as an amendment to the solicitation, if that information is necessary in submitting bids or if the lack of it would be prejudicial to other prospective bidders.

3 RESERVED

(NOTE: FACSIMILE, ELECTRONIC COMMERCE OR TELEGRAPHIC BIDS ARE NOT AUTHORIZED AND WILL NOT BE ACCEPTED. TELEGRAPHIC MODIFICATIONS OR WITHDRAWAL OF BIDS ARE AUTHORIZED. FACSIMILE MODIFICATIONS OR WITHDRAWAL ARE NOT AUTHORIZED.)

4 (FAR 52.214-5) SUBMISSION OF BIDS (MAR 1997).

(a) Bids and bid modifications shall be submitted in sealed envelopes or packages (unless submitted by electronic means) (1) addressed to the office specified in the solicitation and (2) showing the time and date specified for receipt, the solicitation number, and the name and address of the bidder.

(b) Bidders using commercial carrier services shall ensure that the bid is addressed and marked on the outermost envelope or wrapper as prescribed in subparagraphs (a) (1) and (2) of this provision when delivered

to the office specified in the solicitation.

(c) Telegraphic bids will not be considered unless authorized by the solicitation; however, bids may be modified or withdrawn by written or telegraphic notice.

(d) Facsimile bids, modifications, or withdrawals, will not be considered unless authorized by the solicitation

(e) Bids submitted by electronic commerce shall be considered only if the electronic commerce method was specifically stipulated or permitted by the solicitation.

5 (FAR 52.214-18) PREPARATION OF BIDS - CONSTRUCTION (APRIL 1984).

(a) Bids must be--

(1) Submitted on the forms furnished by the Government or on copies of those forms, and
(2) **Manually signed.** The person signing a bid must initial each erasure or change appearing on any bid form.

(b) The bid form may require bidders to submit bid prices for one or more items on various bases, including--

(1) Lump sum bidding;

(2) Alternate prices;

(3) Units of construction; or

(4) Any combination of subparagraphs (1) through (3) above.

(c) If the solicitation requires bidding on all items, failure to do so will disqualify the bid. If bidding on all items is not required, bidders should insert the words "no bid" in the space provided for any item on which no price is submitted.

(d) Alternate bids will not be considered unless this solicitation authorizes their submission.

6 (FAR 52.214-4) FALSE STATEMENTS IN BIDS (APRIL 1984).

Bidders must provide full, accurate, and complete information as required by this solicitation and its attachments. The penalty for making false statements in bids is prescribed in 18 U.S.C. 1001.

(NOTE: FACSIMILE, ELECTRONIC COMMERCE OR TELEGRAPHIC BIDS ARE NOT AUTHORIZED AND WILL NOT BE ACCEPTED. TELEGRAPHIC MODIFICATIONS OR WITHDRAWAL OF BIDS ARE AUTHORIZED. FACSIMILE MODIFICATIONS OR WITHDRAWAL ARE NOT AUTHORIZED.)

7 (FAR 52.214-7) LATE SUBMISSIONS, MODIFICATIONS, AND WITHDRAWALS OF BIDS (NOV 1999).

(a) Bidders are responsible for submitting bids, and any modifications

or withdrawals, so as to reach the Government office designated in the invitation for bids (IFB) by the time specified in the IFB. If no time is specified in the IFB, the time for receipt is 4:30 p.m., local time, for the designated Government office on the date that bids are due.

(b)(1) Any bid, modification, or withdrawal received at the Government office designated in the IFB after the exact time specified for receipt of bids is "late" and will not be considered unless it is received before award is made, the Contracting Officer determines that accepting the late bid would not unduly delay the acquisition; and—

(i) If it was transmitted through an electronic commerce method authorized by the IFB, it was received at the initial point of entry to the Government infrastructure not later than 5:00 p.m. one working day prior to the date specified for receipt of bids; or

(ii) There is acceptable evidence to establish that it was received at the Government installation designated for receipt of bids and was under the Government's control prior to the time set for receipt of bids.

(2) However, a late modification of an otherwise successful bid that makes its terms more favorable to the Government, will be considered at any time it is received and may be accepted.

(c) Acceptable evidence to establish the time of receipt at the Government installation includes the time/date stamp of that installation on the bid wrapper, other documentary evidence of receipt maintained by the installation, or oral testimony or statements of Government personnel.

(d) If an emergency or unanticipated event interrupts normal Government processes so that bids cannot be received at the Government office designated for receipt of bids by the exact time specified in the IFB and urgent Government requirements preclude amendment of the IFB, the time specified for receipt of bids will be deemed to be extended to the same time of day specified in the solicitation on the first work day on which normal Government processes resume.

(e) Bids may be withdrawn by written notice received at any time before the exact time set for receipt of bids. If the IFB authorizes facsimile bids, bids may be withdrawn via facsimile received at any time before the exact time set for receipt of bids, subject to the conditions specified in the provision at 52.214-31, Facsimile Bids. A bid may be withdrawn in person by a bidder or its authorized representative if, before the exact time set for receipt of bids, the identity of the person requesting withdrawal is established and the person signs a receipt for the bid.

(End of provision)

8 INFORMATION FOR MODIFYING BIDS.

Bids which have been delivered to the designated bid receiving office may be modified or withdrawn by mail, mailgram, or telegram received at any time before the exact time set for receipt of bids. Modifications or withdrawals sent by mail should be transmitted to the place of bid opening Standard Form SF1442 (Page 00010-1), Item 8. Telephone modifications or withdrawals, other than telecopier, will not be accepted. All bid modifications or withdrawals must be signed by the bidder or its authorized representative. Any questions regarding these procedures should be directed to the Omaha District's Contracting Division at (402) 221-4108. This number should also be used to verify the receipt of messages.

9 BID GUARANTEE.

See Contract Clauses clause FAR 52.228-1, BID GUARANTEE. Bid guarantee MUST be in an original and accompanied by an original power of attorney of the surety. Bidders are reminded that a bid bond is required under the solicitation. Proper bid bonds and documents related to the bid bond are a matter of responsiveness that may not be corrected after bid opening. The Comptroller General of the General Accounting Office has issued a recent decision that may impact acceptability of bid bonds and related documents. The case, All Seasons Construction, Inc, B-291166.2, December 6, 2002, concluded that, in order for the bid to be responsive, signatures (including mechanically-produced signatures) must be added to powers of attorney **after** generation from a computer printer. It may be found at the GAO website at <<http://www.gao.gov/decisions/bidpro/bidpro.htm>>. Bidders are encouraged to refer to this case for guidance prior to submitting their bids.

10 PERFORMANCE AND PAYMENT BONDS.

See Contract Clauses clause FAR 52.228-15, PERFORMANCE AND PAYMENT BONDS. To have the bond considered valid, both the bond and the Power of Attorney must be original. Facsimile copies will not be acceptable, and will render the bid invalid, therefore eliminating it from competition.

(NOTE: FOR THE PURPOSES OF THIS SOLICITATION, THE WORD "ITEM" SHALL BE CONSIDERED TO MEAN "SCHEDULE.")

11 (FAR 52.214-19) CONTRACT AWARD - SEALED BIDDING - CONSTRUCTION (AUG 1996).

(a) The Government will evaluate bids in response to this solicitation without discussions and will award a contract to the responsible bidder whose bid, conforming to the solicitation, will be most advantageous to the Government, considering only price and the price-related factors specified elsewhere in the solicitation.

(b) The Government may reject any or all bids, and waive informalities or minor irregularities in bids received.

(c) The Government may accept any item or combination of items, unless doing so is precluded by a restrictive limitation in the solicitation of the bid.

(d) The Government may reject a bid as nonresponsive if the prices bid are materially unbalanced between line items or subline items. A bid is materially unbalanced when it is based on prices significantly less than cost for some work, and prices which are significantly overstated in relation to cost for other work, and if there is a reasonable doubt that the bid will result in the lowest overall cost to the Government even though it may be the low evaluated bid, of it is so unbalanced as to be tantamount to allowing an advance payment.

12 NORTH AMERICAN CLASSIFICATION SYSTEM (NAICS).

In accordance with NAICS Manual, the work in this solicitation is assigned classification code 236220.

13 SMALL BUSINESS SIZE STANDARD.

This solicitation is not limited to small business concerns, but, for definition purposes, a concern is small if its average annual receipts for its preceding 3 fiscal years did not exceed $28.5 million. (based on FAR 19.102)

14 (FAR 52.214-3) AMENDMENTS TO INVITATIONS FOR BIDS (DECEMBER 1989).

(a) If this solicitation is amended, then all terms and conditions which are not modified remain unchanged.
(b) Bidders shall acknowledge receipt of any amendment to this solicitation (1) by signing and returning the amendment, (2) by identifying the amendment number and date in the space provided for this purpose on the form for submitting a bid, (3) by letter or telegram or (4) by facsimile, if facsimile bids are authorized in the solicitation. The Government must receive the acknowledgment by the time and at the place specified for receipt of bids. (FAR 52.214-3.)

15 CHANGES PRIOR TO OPENING BIDS.

The right is reserved, as the interest of the Government may require, to revise the specifications and/or drawings prior to the date set for opening bids. Such revisions will be announced by an amendment or amendments to this Invitation for Bids. **It shall be the responsibility of the prospective bidder to obtain copies of amendments from the website listed in paragraph: PLAN HOLDER'S LIST below**. The Government may (but not required) send an amendment notification to let prospective bidders know that an amendment has been issued. If the revisions and amendments are of a nature which requires material changes in quantities or prices to be bid, the date set for opening bids may be postponed as necessary, in the opinion of the Commander, to enable bidders to revise their bids. In such cases, the amendment will include an announcement of the new date for opening bids.

16 (FAR 52.214-34) SUBMISSION OF OFFERS IN THE ENGLISH LANGUAGE (APR 1991)

Offers submitted in response to this solicitation shall be in the English language. Offers received in other than English shall be rejected.

(End of provision)

17 (FAR 52.214-35) SUBMISSION OF OFFERS IN U.S. CURRENCY (APR 1991)

Offers submitted in response to this solicitation shall be in terms of U.S. dollars. Offers received in other than U.S. dollars shall be rejected.
(End of provision)

18 (EFARS 52.214-5000) ARITHMETIC DISCREPANCIES.

(a) For the purpose of initial evaluation of bids, the following will be utilized in resolving arithmetic discrepancies found on the face of the bidding schedule as submitted by the bidder:

(1) Obviously misplaced decimal points will be corrected;

(2) In case of discrepancy between unit price and extended price, the unit price will govern;

(3) Apparent errors in extension of unit prices will be corrected;

(4) Apparent errors in addition of lump sum and extended prices will be corrected.

(b) For the purposes of bid evaluation, the Government will proceed on the assumption that the bidder intends his bid to be evaluated on the basis of the unit prices, extensions, and totals arrived at by resolution of arithmetic discrepancies as provided above and the bid will be so reflected on the abstract of bids.

(c) These correction procedures shall not be used to resolve any ambiguity concerning which bid is low.

19 (FAR 52.217-5) EVALUATION OF OPTIONS (JUL 1990).

Except when it is determined in accordance with FAR 17.206(b) not to be in the Government's best interests, the Government will evaluate offers for award purposes by adding the total price for all options to the total price for the basic requirement. Evaluation of options will not obligate the Government to exercise the option(s).

20 OPTIONS.

The Government may reject an offer as nonresponsive if it is materially unbalanced as to prices for the basic requirement and the option quantities. An offer is unbalanced when it is based on prices significantly less than cost for some work and prices which are significantly overstated for other work.

21 AVAILABILITY OF SPECIFICATIONS, STANDARDS, AND DESCRIPTIONS.

Specifications, standards, and descriptions cited in this solicitation are available as indicated below:

21.1 (FAR 52.211-2) AVAILABILITY OF SPECIFICATIONS LISTED IN THE DOD INDEX OF SPECIFICATIONS AND STANDARDS (DODISS) AND DESCRIPTIONS LISTED IN THE ACQUISITION MANAGEMENT SYSTEMS AND DATA REQUIREMENTS CONTROL LIST, DOD 5010.12-L (DEC 1999).

Copies of specifications, standards, and data item descriptions cited in this solicitation may be obtained—

(a) From the ASSIST database via the Internet at http://assist.daps.mil; or

(b) By submitting a request to the—

Department of Defense Single Stock Point (DoDSSP)
Building 4, Section D
700 Robbins Avenue
Philadelphia, PA 19111-5094
Telephone (215) 697-2667/2179
Facsimile (215) 697-1462.

(End of provision)

21.2 CORPS OF ENGINEERS SPECIFICATIONS.

Corps of Engineers specifications of the CRD-C series may be obtained from the National Institute of Building Sciences Construction Criteria Base (CCB) on CD-ROM. Contact the CCB directly at (202) 289-7800 for an order form or obtain an order form at the following internet address: http://www.ccb.org/ccbsubscribe/Subsmain.asp. There is a regular annual subscription fee to CCB of $700 per year. (Note: This is considered to be the Contractor's responsibility and cost). This will include CCB on CD-ROM or DVD plus unlimited internet access plus access to the new Whole Building Design Guide, now under construction and scheduled for launch in October 2001. Selected Corps of Engineers specifications of CRD-C series are available in Acrobat Reader .pdf file format at the following internet address: http://www.wes.army.mil/SL/MTC/handbook/handbook.htm.

21.3 COMMERCIAL (NON-GOVERNMENT) SPECIFICATIONS, STANDARDS, AND DESCRIPTIONS.

These specifications, standards, and descriptions are not available from Government sources. They may be obtained from the publishers.

22 AVAILABLE PLANT.

Each bidder shall, upon request of the Contracting Officer, furnish a list of the plant available to the bidder and proposed for use on the work.

23 EQUIPMENT OWNERSHIP AND OPERATING EXPENSE SCHEDULE.

Whenever a contract or modification of contract price is negotiated, the Contractor's cost proposals for equipment ownership and operating expenses shall be determined in accordance with the requirements of paragraph: EQUIPMENT OWNERSHIP AND OPERATING EXPENSE SCHEDULE, contained in Section: 00800, SPECIAL CONTRACT REQUIREMENTS of the specifications. A copy of EP 1110-1-8 "Construction Equipment Ownership and Operating Expense Schedule" is available for review at the office listed in paragraph: SITE VISIT (CONSTRUCTION) herein or at the following internet address: http://www.usace.army.mil/inet/usace-docs/eng-pamphlets/ep.htm. (copy also included on CD-ROM issued with this solicitation). .

24 NOTICE REGARDING BUY AMERICAN ACT.

The Buy American Act (41 U.S.C. 10a-10d) generally requires that only domestic construction material be used in the performance of this contract. Exception from the Buy American Act shall be permitted only in the case of nonavailability of domestic construction materials. A bid or proposal offering nondomestic construction material will not be accepted unless specifically approved by the Government. When a bidder or offeror proposes to furnish nondomestic construction material, his bid or proposal must set forth an itemization of the quantity, unit price, and intended use of each item of such nondomestic construction material. When offering nondomestic construction material pursuant to this paragraph, bids or proposals may also

offer, at stated prices, any available comparable domestic construction material, so as to avoid the possibility that failure of a nondomestic construction material to be acceptable under this paragraph will cause rejection of the entire bid. All bidders are cautioned that, prior Government conduct notwithstanding, the Contractor's selection of a domestic construction material (as defined in FAR 52.225-5 Buy American Act-Construction Materials) which would require the subsequent selection of a foreign construction material for compatibility is not a justification for waiver of the Buy American Act. It is the Contractor's responsibility to verify, prior to submitting the materials for approval, that each system can be built to meet the contract specifications without the use of foreign construction materials.

25 (FAR 52.236-27) SITE VISIT (CONSTRUCTION) (FEB 1995).

(a) The clauses at 52.236-2, Differing Site Conditions, and 52.236-3, Site Investigations and Conditions Affecting the Work, will be included in any contract awarded as a result of this solicitation. Accordingly, offerors or quoters are urged and expected to inspect the site where the work will be performed.

(b) Contractors interested in inspecting the site of the proposed work should contact John Marchetti, 934 MSG/CEV, United States Air Force Reserve Command, 760 Military Highway, Minneapolis St. Paul IAP-ARS, Minneapolis, Minnesota 55450-2000, Phone:(612) 713-1915, Fax: (612) 713-1950.

26 BIDDER'S QUESTIONS AND COMMENTS.

Questions and/or comments relative to these bidding documents should be submitted via e-mail or mailed to the address identified in paragraph: AVAILABILITY OF BID RESULTS below. Comments should reach this office no later than 20 calendar days prior to the date set for opening of bids, if feasible, in order that changes, if needed, may be added by amendment. E-mail addresses, FAX numbers, items for question and points of contact are listed below. Phone calls with questions should be made between 8:30 a.m. and 3:30 p.m. (Central Standard Time) Monday through Friday.

Note: A courtesy copy of all questions shall be sent to the Contract Specialist (Contractual Matters Point of Contact), the Program Manager and Specifications Section (Technical Content Points of Contact).

Items for Question	Points of Contact/ Phone numbers/ FAX Numbers	E-mail Addresses
Contractual Matters: Ordering CD-Rom of the plans and specifications (limit One per firm)/ amendments**/ Bid Results (See Paragraph AVAILABILITY OF BID RESULTS, below)/ Receipt of Bids	Kevin McElroy 402-221-4108 (phone) 402-221-4199 (Fax)	Kevin.P.McElroy@usace.army.mil
Planholder's List	See paragraph: PLAN	

	HOLDER'S LIST, below.	
Small Business Matters	Hubert Carter 402-221-4110 (phone)	hubert.j.carter@usace.army.mil
Technical Contents Of Plans and Specification	Vince Turner 402-221-4561 (phone)	Vincent.C.Turner@usace.army.mil
	Or	
	Specifications Section Marylee Stobbe 402-221-4411 (Phone) 402-221-3842 (Fax)	Marylee.F.Stobbe@usace.army.mil
Site Inspection	See Paragraph: SITE VISIT (CONSTRUCTION), above	

**** - The Government may elect to send a notification that an amendment has been posted to the Government's web address. It shall be the Contractor's, Subcontractor's and Supplier's responsibility to check the Government's web address for amendments.**

26.1 PLAN HOLDER'S LIST.

The CD-Rom will provide a list of plan holders that have registered at the time the CD-Rom was created. It is bidder's responsibility to check for any updates to the plan holder's list, which is available at the following web address:

http://ebs-nwo.wes.army.mil/

26.2 AVAILABILITY OF BID RESULTS (Local Clause/Provision)

Bid results will be available after bid opening on the Governent's web address:
http://ebs-nwo.wes.army.mil/. Official bid abstracts will be available and may be requested by sending a self-addressed stamped envelope to: U.S. Army Corps of Engineers, Omaha District, ATTN: CENWO-CT-M(Kevin McElroy), 106 South 15th Street, Omaha, NE 68102-1618.

27 (FAR 52.233-2) SERVICE OF PROTEST (AUG 1996).

(a) Protests, as defined in section 33.101 of the Federal Acquisition Regulation, that are filed directly with an agency, and copies of any protests that are filed with the General Accounting Office (GAO), shall be served on the Contracting Officer (addressed as follows) by obtaining written and dated acknowledgement of receipt from District Counsel, 106 South 15th Street, Omaha, Nebraska 68102-1618.

(b) The copy of any protest shall be received in the office designated above within one day of filing a protest with the GAO.

28 PRE-AWARD SURVEY INFORMATION (Local Provision) (Sep 93)

In accordance with Paragraph PERFORMANCE AND PAYMENT BONDS, request that the following information be submitted with your bid. This facilitates the award process.

1. Financial
   - Name, address, and fax number of Financial Institution
   - Name and phone number of finance individual (primary and alternate) to be contacted for information

2. Bonding Information
   - Provide the name, address, regular phone number and fax number of your Surety Company.

3. Performance
   - Provide three (3) references to be contacted on your company's performance

The following information should be submitted:
Name and Fax number of Owner/User
Project Name, Location, Contract Number, and dollar value
Name and phone number of individuals (primary and alternate) that can verify performance of the project

29 DATA UNIVERSAL NUMBERING SYSTEM (DUNS) NUMBER

(a) The offeror shall enter, in the block with its name and address on the cover page of its offer, the annotation "DUNS" followed by the DUNS number that identifies the offeror's name and address exactly as stated in the offer. The DUNS number is a nine-digit number assigned by Dun and Bradstreet Information Services.

(b) If the offeror does not have a DUNS number, it should contact Dun and Bradstreet directly to obtain one. A DUNS number will be provided immediately by telephone at no charge to the offeror. For information on obtaining a DUNS number, the offeror, if located within the United States, should call Dun and Bradstreet at 1-800-333-0505. The offeror should be prepared to provide the following information:

(1) Company name.

(2) Company address.

(3) Company telephone number.

(4) Line of business.

(5) Chief executive officer/key manager.

(6) Date the company was started.

(7) Number of people employed by the company.

(8) Company affiliation.

(c) Offerors located outside the United States may obtain the location

and phone number of the local Dun and Bradstreet Information Services office from the Internet home page at http://www.customerservice@dnb.com. If an offeror is unable to locate a local service center, it may send an e-mail to Dun and Bradstreet at globalinfo@mail.dnb.com.

(End of provision)

30 (FAR 52.216-1) TYPE OF CONTRACT (APR 1984).

The Government contemplates award of a Firm Fixed Price contract resulting from this solicitation.

31 SUBCONTRACTING PLAN/SUBCONTRACTING GOALS REGARDING THE UTILIZATION OF SMALL BUSINESS CONCERNS.

a. Application. This clause applies only to large business concerns submitting bids for services exceeding $500,000 or for construction exceeding $1,000,000.

b. Federal Acquisition Regulations (FAR). Attention is directed to the following FAR provisions contained in this solicitation:

52.219-8, Utilization of Small Business Concerns (Alternate I)

52.219-9, Small Business Subcontracting Plan (Alternate I)

52.219-16, Liquidated Damages - Small Business Subcontracting Plan

52.226-1, Utilization of Indian Organizations and Indian-Owned Economic Enterprises

c. Goals. The U.S. Army Corps of Engineers considers the following goals reasonable and achievable for fiscal year 2004 and for the performance of the resultant contract:

(1) 57.2% of planned subcontracting dollars with small business concerns.

(2) 8.9% of planned subcontracting dollars with those small business concerns owned and controlled by socially and economically disadvantaged individuals.

(3) 8.1% of planned subcontracting dollars with those small business concerns owned and controlled by women.

(4) 3.0% of planned subcontracting dollars with those small business concerns owned and controlled by Service-Disabled Veterans.

(5) 3.0% of planned subcontracting dollars with those small business concerns owned and controlled by HubZones.

d. Submission and Review of Subcontracting Plan.

SUBMISSION OF SMALL BUSINESS SUBCONTRACTING PLAN IS NOT APPLICABLE TO SMALL BUSINESSES.

(1) The apparent low bidder must submit a subcontracting plan within five (5) calendar days after bid opening (a longer period maybe

granted by the Contracting Officer upon request) within 24 hours after notification by the Government to the Contracting Activity.

(2) Goals included in the subcontracting plan should be at least equal to those indicated above. If lesser goals are proposed, the bidder may be required to substantiate how the proposed plan represents the bidder's best effort to comply with the terms and conditions of the solicitation. Bidders are highly encouraged to become familiar with the intent of the solicitation provisions and the elements of the subcontracting plan.

(3) The subcontracting plan must contain, as a minimum, the elements set forth in FAR provision 52.219-9. An example subcontracting plan will be furnished to the apparent low bidder (upon request). The example subcontracting plan (if requested) should not be construed as an acceptable subcontracting plan. Any format will be acceptable provided that the plan addresses each element as required by the Federal Acquisition Regulations and its supplements.

(4) Proposed plans will be reviewed by the Government to ensure the plan represents the firm's best efforts to maximize subcontracting opportunities for small, small disadvantaged and women-owned businesses.

(5) Subcontracting plans are required to be approved prior to Contract Award. The approved subcontracting plan (to include goals) will become a material part of the contract.

e. Failing to Submit An Acceptable Subcontracting Plan. An apparent low bidder failing to submit a subcontracting plan which demonstrates a reasonable effort to meet the goals listed above or provide an explanation why lesser goals are proposed (upon request), will be considered as non-responsive and not considered eligible for award of the contract.

f. Questions or Assistance Needed in Developing Subcontracting Plan. For any questions or assistance needed in developing the subcontracting plan, contact the Contract Specialist or District's Deputing for Small Business (See paragraph: BIDDER QUESTIONS AND COMMENTS, Contract Specialist [Bid Results] or the District's Deputy for Small Business [Small Business] or fax your inquiries to 402-221-4199).

REQUIRED CENTRAL CONTRACTOR REGISTRATION (CCR)

Register Now: Don't wait until you submit an offer on a solicitation. You must be registered to receive the contract award. It can often take 30 days for CCR to process your registration information.

Register One of Three Ways:

Internet: http://www.ccr.gov

Value Added Network (VAN) for EDI users: Contact your VAN for information. If you need to find a VAN look at http://www.acq.osd.mil/ec/ecip/van_list.htm

FAX or Mail: Call (888)227-2423 or (616)961-4725 to receive a registration package. FAX or mail the completed information to the CCR Assistance Center. It can take up to 30 days to process a faxed or mailed package.

CCR Assistance Center
74 Washington Street North, Suite 7
Battle Creek, MI 49017-3084
FAX: (616)961-7243

This page was intentionally left blank for duplex printing.

SECTION 00600
REPRESENTATIONS, CERTIFICATIONS & OTHER STATEMENTS OF BIDDERS

INDEX

1. (FAR 52.203-2) CERTIFICATE OF INDEPENDENT PRICE DETERMINATION (APR 1985).
2. (FAR 52.203-11) CERTIFICATION AND DISCLOSURE REGARDING PAYMENTS TO INFLUENCE CERTAIN FEDERAL TRANSACTIONS (APR 1991).
3. TAXPAYER IDENTIFICATION (Local Provison).
4. (FAR 52.204-5) WOMEN-OWNED BUSINESS (OTHER THAN SMALL BUSINESS) [MAY 1999]
5. (DFARS 252.204-7001) COMMERCIAL AND GOVERNMENT ENTITY (CAGE) CODE REPORTING (AUG 1999).
6. (FAR 52.209-5) CERTIFICATION REGARDING DEBARMENT, SUSPENSION, PROPOSED DEBARMENT, AND OTHER RESPONSIBILITY MATTERS (DEC 2001).
7. (DFARS 252.209-7001) DISCLOSURE OF OWNERSHIP OR CONTROL BY A FOREIGN GOVERNMENT THAT SUPPORTS TERRORISM (MAR 1998). [For Contracts exceeding $100,000]
8. (FAR 52.211-6) BRAND NAME OR EQUAL (AUG 1999).
9. RESERVED
10. RESERVED
11. (FAR 52.219-1) SMALL BUSINESS PROGRAM REPRESENTATIONS (APR 2002) ALTERNATE I (APR 2002)
12. (FAR 52.219-2) EQUAL LOW BIDS (OCT 1995)
13. RESERVED
14. (FARS 52.219-19) SMALL BUSINESS CONCERN REPRESENTATION FOR THE SMALL BUSINESS COMPETITIVENESS DEMONSTRATION PROGRAM (OCT 2000).
15. (FARS 52.219-21) SMALL BUSINESS SIZE REPRESENTATION FOR TARGETED INDUSTRY CATEGORIES UNDER THE SMALL BUSINESS COMPETITIVENESS DEMONSTRATION PROGRAM (MAY 1999).
16. (FAR 52.222-21) CERTIFICATION OF NONSEGREGATED FACILITIES (FEB 1999)
17. (FAR 52.222-22) PREVIOUS CONTRACTS AND COMPLIANCE REPORTS (FEB 1999).
18. (FAR 52.223-4) RECOVERED MATERIAL CERTIFICATION (OCT 1997)
19. (FAR 52.223-13) CERTIFICATION OF TOXIC CHEMICAL RELEASE REPORTING (AUG 2003) [For Contracts over $100,000]
20. (DFARS 252.225-7031) SECONDARY ARAB BOYCOTT OF ISRAEL (APR 2003)
21. (DFARS 252.247-7022) REPRESENTATION OF EXTENT OF TRANSPORTATION BY SEA (AUG 1992).

SECTION 00600
REPRESENTATIONS, CERTIFICATIONS & OTHER STATEMENTS OF BIDDERS

The bidder (offeror) makes the following certification and representations as a part of the bid, shall check the appropriate boxes, fill in the appropriate information, and provide signatures on the attached "Solicitation Form" (00600) pages, and submit with Standard Form 1442 (Section 00010).

1. (FAR 52.203-2) CERTIFICATE OF INDEPENDENT PRICE DETERMINATION (APR 1985).

(a) The offeror certifies that -

(1) The prices in this offer have been arrived at independently, without, for the purpose of restricting competition, any consultation, communication, or agreement with any other offeror or competitor relating to (i) those prices, (ii) the intention to submit an offer, or (iii) the methods or factors used to calculate the prices offered;

(2) the prices in this offer have not been and will not be knowingly disclosed by the offeror, directly or indirectly, to any other offeror or competitor before bid opening (in the case of a Sealed Bid solicitation) or contract award (in the case of a negotiated solicitation) unless otherwise required by law; and

(3) no attempt has been made or will be made by the offeror to induce any other concern to submit or not to submit an offer for the purpose of restricting competition.

(b) Each signature on the offer is considered to be a certification by the signatory that the signatory -

(1) is the person in the offeror's organization responsible for determining the prices being offered in this bid or proposal, and that the signatory has not participated and will not participate in any action contrary to subparagraphs (a)(1) through (a)(3) above; or

(2)(i) has been authorized, in writing, to act as agent for the following principals in certifying that those principals have not participated, and will not participate in any action contrary to subparagraphs (a)(1) through (a)(3) above

_____

_____

_____ [insert full name of person(s) in the offeror's organization responsible for determining the prices offered in this bid or proposal, and the title of his or her position in the offeror's organization];

(ii) as an authorized agent, does certify that the principals named in subdivision (b)(2)(i) above have not participated, and will not participate, in any action contrary to subparagraphs (a)(1) through (a)(3) above; and

(iii) as an agent, has not personally participated, and will not participate, in any action contrary to subparagraphs (a)(1) through (a)(3) above.

(c) If the offeror deletes or modifies subparagraph (a)(2) above, the offeror must furnish with its offer a signed statement setting forth in detail the circumstances of the disclosure.

2. (FAR 52.203-11) CERTIFICATION AND DISCLOSURE REGARDING PAYMENTS TO INFLUENCE CERTAIN FEDERAL TRANSACTIONS (APR 1991).

(a) The definitions and prohibitions contained in the clause, at FAR 52.203-12, Limitation on Payments to Influence Certain Federal Transactions, included in this solicitation, are hereby incorporated by reference in paragraph (b) of this certification.

(b) The offeror, by signing its offer, hereby certifies to the best of his or her knowledge and belief that on or after December 23, 1989, -

(1) No Federal appropriated funds have been paid or will be paid to any person for influencing or attempting to influence an officer or employee of any agency, a Member of Congress, an officer or employee of Congress, or an employee of a Member of Congress on his or her behalf in connection with the awarding of any Federal contract, the making of any Federal grant, the making of any Federal loan, the entering into of any cooperative agreement, and the extension, continuation, renewal, amendment or modification of any Federal contract, grant, loan, or cooperative agreement;

(2) If any funds other than Federal appropriated funds (including profit or fee received under a covered Federal transaction) have been paid, or will be paid, to any person for influencing or attempting to influence an officer or employee of any agency, a Member of Congress, an officer or employee of Congress, or an employee of a Member of Congress on his or her behalf in connection with this solicitation, the offeror shall complete and submit, with its offer, OMB standard form LLL, Disclosure of Lobbying Activities, to the Contracting Officer; and

(3) He or she will include the language of this certification in all subcontract awards at any tier and require that all recipients of subcontract awards in excess of $100,000 shall certify and disclose accordingly.

(c) Submission of this certification and disclosure is a prerequisite for making or entering into this contract imposed by section 1352, title 31, United States Code. Any person who makes an expenditure prohibited under this provision or who fails to file or amend the disclosure form to be filed or amended by this provision, shall be subject to a civil penalty of not less than $10,000, and not more than $100,000, for each such failure.

3. TAXPAYER IDENTIFICATION (Local Provison).

(a) Definitions.

"Common parent," as used in this provision, means that corporate entity that owns or controls an affiliated group of corporations that files its Federal income tax returns on a consolidated basis, and of which the offeror is a member.

"Taxpayer Identification Number (TIN)," as used in this provision, means the number required by the Internal Revenue Service (IRS) to be used by the offeror in reporting income tax and other returns. The TIN may be either a Social Security Number or an Employer Identification Number.

(b) All offerors must submit the information required in paragraphs (d) through (f) of this provision to comply with debt collection requirements of 31 U.S.C. 7701(c) and 3325(d), reporting requirements of 26 U.S.C. 6041, 6041A, and 6050M, and implementing regulations issued by the IRS. If the resulting contract is subject to the payment reporting requirements described in Federal Acquisition Regulation (FAR) 4.904, the failure or refusal by the offeror to furnish the information may result in a 31 percent reduction of payments otherwise due under the contract.

(c) The TIN may be used by the Government to collect and report on any delinquent amounts arising out of the offeror's relationship with the Government (31 U.S.C. 7701(c)(3)). If the resulting contract is subject to the payment reporting requirements described in FAR 4.904, the TIN provided hereunder may be matched with IRS records to verify the accuracy of the offeror's TIN.

(d) Taxpayer Identification Number (TIN).

[ ] TIN: _____.

[ ] TIN has been applied for.

[ ] TIN is not required because:

[ ] Offeror is a nonresident alien, foreign corporation, or foreign partnership that does not have income effectively connected with the conduct of a trade or business in the United States and does not have an office or place of business or a fiscal paying agent in the United States;

[ ] Offeror is an agency or instrumentality of a foreign government;

[ ] Offeror is an agency or instrumentality of the Federal Government.

(e) Type of organization.

[ ] Sole proprietorship;

[ ] Partnership;

[ ] Corporate entity (not tax-exempt);

[ ] Corporate entity (tax-exempt);

[ ] Government entity (Federal, State, or local);

[ ] Foreign government;

[ ] International organization per 26 CFR 1.6049-4;

[ ] Other _____.

(f) Common parent.

[ ] Offeror is not owned or controlled by a common parent as defined in paragraph (a) of this provision.

[ ] Name and TIN of common parent:

Name _____

TIN _____

(End of provision)

4. (FAR 52.204-5) WOMEN-OWNED BUSINESS (OTHER THAN SMALL BUSINESS) [MAY 1999]

(a) *Definition*. Women-owned business concern, as used in this provision, means a concern that is

at least 51 percent owned by one or more women; or in the case of any publicly owned business, at least 51 percent of its stock is owned by one or more women; and whose management and daily business operations are controlled by one or more women.

(b) *Representation. [Complete only if the offeror is a women-owned business concern and has not represented itself as a small business concern in paragraph (b)(1) of FAR 52.219–1, Small Business Program Representations, of this solicitation.]* The offeror represents that it [ ] is a women-owned business concern.
(End of provision)

5. (DFARS 252.204-7001) COMMERCIAL AND GOVERNMENT ENTITY (CAGE) CODE REPORTING (AUG 1999).

(a) The offeror is requested to enter its CAGE code on its offer in the block with its name and address. The CAGE code entered must be for that name and address. Enter "CAGE" before the number.

(b) If the offeror does not have a CAGE code, it may ask the Contracting Officer to request one from the Defense Logistics Information Service (DLIS). The Contracting Officer will-

(1) Ask the Contractor to complete section B of a DD Form 2051, Request for Assignment of a Commercial and Government Entity (CAGE) Code;

(2) Complete section A and forward the form to DLIS; and

(3) Notify the Contractor of its assigned CAGE code.

(c) Do not delay submission of the offer pending receipt of a CAGE code.

6. (FAR 52.209-5) CERTIFICATION REGARDING DEBARMENT, SUSPENSION, PROPOSED DEBARMENT, AND OTHER RESPONSIBILITY MATTERS (DEC 2001).

(a)(1) The Offeror certifies, to the best of its knowledge and belief, that—
(i) The Offeror and/or any of its Principals—
(A) Are [ ] are not [ ] presently debarred, suspended, proposed for debarment, or declared ineligible for the award of contracts by any Federal agency;
(B) Have [ ] have not [ ], within a three-year period preceding this offer, been convicted of or had a civil judgment rendered against them for: commission of fraud or a criminal offense in connection with obtaining, attempting to obtain, or performing a public (Federal, state, or local) contract or subcontract; violation of Federal or state antitrust statutes relating to the submission of offers; or commission of embezzlement, theft, forgery, bribery, falsification or destruction of records, making false statements, tax evasion, or receiving stolen property; and
(C) Are [ ] are not [ ] presently indicted for, or otherwise criminally or civilly charged by a governmental entity with, commission of any of the offenses enumerated in paragraph (a)(1)(i)(B) of this provision.
(ii) The Offeror has [ ] has not [ ], within a three-year period preceding this offer, had one or more contracts terminated for default by any Federal agency.
(2) "Principals," for the purposes of this certification, means officers; directors; owners; partners; and, persons having primary management or supervisory responsibilities within a business entity *(e.*g., general manager; plant manager; head of a subsidiary, division, or business segment, and similar positions).

This Certification Concerns a Matter Within the Jurisdiction of an Agency of the United States and the Making of a False, Fictitious, or Fraudulent Certification May Render the Maker Subject

to Prosecution Under Section 1001, Title 18, United States Code.

(b) The Offeror shall provide immediate written notice to the Contracting Officer if, at any time prior to contract award, the Offeror learns that its certification was erroneous when submitted or has become erroneous by reason of changed circumstances.

(c) A certification that any of the items in paragraph (a) of this provision exists will not necessarily result in withholding of an award under this solicitation. However, the certification will be considered in connection with a determination of the Offeror's responsibility. Failure of the Offeror to furnish a certification or provide such additional information as requested by the Contracting Officer may render the Offeror nonresponsible.

(d) Nothing contained in the foregoing shall be construed to require establishment of a system of records in order to render, in good faith, the certification required by paragraph (a) of this provision. The knowledge and information of an Offeror is not required to exceed that which is normally possessed by a prudent person in the ordinary course of business dealings.

(e) The certification in paragraph (a) of this provision is a material representation of fact upon which reliance was placed when making award. If it is later determined that the Offeror knowingly rendered an erroneous certification, in addition to other remedies available to the Government, the Contracting Officer may terminate the contract resulting from this solicitation for default. (End of Provision)

7. (DFARS 252.209-7001) DISCLOSURE OF OWNERSHIP OR CONTROL BY A FOREIGN GOVERNMENT THAT SUPPORTS TERRORISM (MAR 1998). [For Contracts exceeding $100,000]

(a) Definitions.

As used in this provision-

(1) "Government of a terrorist country" includes the state and the government of a terrorist country, as well as any political subdivision, agency, or instrumentality thereof.

(2) "Terrorist country" means a country determined by the Secretary of State, under section 6(j)(1)(A)) of the Export Administration Act of 1979 (50 U.S.C. App. 2405(j)(i)(A)), to be a country the government of which has repeatedly provided support for acts of international terrorism. As of the date of this provision, terrorist countries include: Cuba, Iran, Iraq, Libya, North Korea, Sudan, and Syria.

(3) "Significant interest" means-

(i) Ownership of or beneficial interest in 5 percent or more of the firm's or subsidiary's securities. Beneficial interest includes holding 5 percent or more of any class of the firm's securities in "nominee shares," "street names," or some other method of holding securities that does not disclose the beneficial owner;

(ii) Holding a management position in the firm, such as a director or officer;

(iii) Ability to control or influence the election, appointment, or tenure of directors or officers in the firm;

(iv) Ownership of 10 percent or more of the assets of a firm such as equipment, buildings, real estate, or other tangible assets of the firm; or

(v) Holding 50 percent or more of the indebtedness of a firm.

(b) Prohibition on award. In accordance with 10 U.S.C. 2327, no contract may be awarded to a firm or a subsidiary of a firm if the government of a terrorist country has a significant interest in the firm or subsidiary [or, in the case of a subsidiary, the firm that owns the subsidiary], unless a waiver is granted by the Secretary of Defense.

(c) Disclosure.

The Offeror shall disclose any significant interest the government of each of the following countries has in the Offeror or a subsidiary of the Offeror. If the Offeror is a subsidiary, it shall also disclose any significant interest the government of a terrorist country has in any firm that owns or controls the subsidiary. The disclosure shall include--

(1) Identification of each government holding a significant interest; and
(2) A description of the significant interest held by each Government.
(End of provision)

8. (FAR 52.211-6) BRAND NAME OR EQUAL (AUG 1999).

(a) If an item in this solicitation is identified as "brand name or equal," the purchase description reflects the characteristics and level of quality that will satisfy the Government's needs. The salient physical, functional, and other characteristics that "equal" products must meet are specified in the solicitation.

(b) To be considered for award, offers of "equal" products, including "equal" products of the brand name manufacturer, must--

(1) Meet the salient physical, functional, and other characteristics specified in the solicitation;

(2) Clearly identify the item by--

(i) Brand name, if any; and

(ii) Make or model number;

(3) Include descriptive literature such as cuts, illustrations, drawings, or a clear reference to previously furnished descriptive data or information available to the Contracting Officer; and

(4) Clearly describe any modifications the offeror plans to make in a product to make it conform to the solicitation requirements. Mark any descriptive material to clearly show the modifications.

(c) The Contracting Officer will evaluate "equal" products on the basis of information by the offeror or identified in the offer and reasonably available to the Contracting Officer. The Contracting Officer is not responsible for locating or securing any information not identified in the offer.

(d) Unless the offeror clearly indicates in its offer that the product being offered is an "equal" product, the offeror shall provide the brand name product referenced in the solicitation.

9. RESERVED

10. RESERVED

11. (FAR 52.219-1) SMALL BUSINESS PROGRAM REPRESENTATIONS (APR 2002) ALTERNATE I (APR 2002)

(a)(1) The North American Industry Classification System (NAICS) code for this acquisition is _____ [*insert NAICS code*].

(2) The small business size standard is _____ [*insert size standard*].

(3) The small business size standard for a concern which submits an offer in its own name, other than on a construction or service contract, but which proposes to furnish a product which it did not itself manufacture, is 500 employees.

(b) *Representations*. (1) The offeror represents as part of its offer that it [ ] is, [ ] is not a small

business concern.

(2) [*Complete only if the offeror represented itself as a small business concern in paragraph (b)(1) of this provision*.] The offeror represents, for general statistical purposes, that it [ ] is, [ ] is not, a small disadvantaged business concern as defined in 13 CFR 124.1002.

(3) [*Complete only if the offeror represented itself as a small business concern in paragraph (b)(1) of this provision*.] The offeror represents as part of its offer that it [ ] is, [ ] is not a women-owned small business concern.

(4) [*Complete only if the offeror represented itself as a small business concern in paragraph (b)(1) of this provision*.] The offeror represents as part of its offer that it [ ] is, [ ] is not a veteran-owned small business concern.

(5) [*Complete only if the offeror represented itself as aveteran-owned small business concern in paragraph (b)(4) of this provision*.] The offeror represents as part of its offer that it [ ] is, [ ] is not a service-disabled veteran-owned small business concern.

(6) *[Complete only if the offeror represented itself as a small business concern in paragraph (b)(1) of this provision*.] The offeror represents, as part of its offer, that—

(i) It [ ] is, [ ] is not a HUBZone small business concern listed, on the date of this representation, on the List of Qualified HUBZone Small Business Concerns maintained by the Small Business Administration, and no material change in ownership and control, principal office, or HUBZone employee percentage has occurred since it was certified by the Small Business Administration in accordance with 13 CFR part 126; and

(ii) It [ ] is, [ ] is not a joint venture that complies with the requirements of 13 CFR part 126, and the representation in paragraph (b)(6)(i) of this provision is accurate for the HUBZone small business concern or concerns that are participating in the joint venture. [*The offeror shall enter the name or names of the HUBZone small business concern or concerns that are participating in the joint venture:*_____.] Each HUBZone small business concern participating in the joint venture shall submit a separate signed copy of the HUBZone representation.

(7) [*Complete if offeror represented itself as disadvantaged in paragraph (b)(2) of this provision.*] The offeror shall check the category in which its ownership falls:

_____ Black American.
_____ Hispanic American.
_____ Native American (American Indians, Eskimos, Aleuts, or Native Hawaiians).
_____ Asian-Pacific American (persons with origins from Burma, Thailand, Malaysia, Indonesia, Singapore, Brunei, Japan, China, Taiwan, Laos, Cambodia (Kampuchea),Vietnam, Korea, The Philippines, U.S. Trust Territory of the Pacific Islands (Republic of Palau), Republic of the Marshall Islands, Federated States of Micronesia, the Commonwealth of the Northern Mariana Islands, Guam, Samoa, Macao, Hong Kong, Fiji, Tonga, Kiribati, Tuvalu, or Nauru).
_____ Subcontinent Asian (Asian-Indian) American (persons with origins from India, Pakistan, Bangladesh, Sri Lanka, Bhutan, the Maldives Islands, or Nepal).
_____ Individual/concern, other than one of the preceding.

(c) *Definitions*. As used in this provision—

"Service-disabled veteran-owned small business concern"—

(1) Means a small business concern—

(i) Not less than 51 percent of which is owned by one or more service-disabled veterans or, in the case of any publicly owned business, not less than 51 percent of the stock of which is owned by one or more service-disabled veterans; and

(ii) The management and daily business operations of which are controlled by one or more service-disabled veterans or, in the case of a veteran with permanent and severe disability, the spouse or permanent caregiver of such veteran.

(2) Service-disabled veteran means a veteran, as defined in 38 U.S.C. 101(2), with a disability that is service connected, as defined in 38 U.S.C. 101(16).

"Small business concern" means a concern, including its affiliates, that is independently owned and operated, not dominant in the field of operation in which it is bidding on Government contracts, and qualified as a small business under the criteria in 13 CFR part 121 and the size standard in paragraph (a) of this provision.

"Veteran-owned small business concern" means a small business concern—

(1) Not less than 51 percent of which is owned by one or more veterans (as defined at 38 U.S.C. 101(2)) or, in the case of any publicly owned business, not less than 51 percent of the stock of which is owned by one or more veterans; and

(2) The management and daily business operations of which are controlled by one or more veterans.

"Women-owned small business concern" means a small business concern—

(1) That is at least 51 percent owned by one or more women; or, in the case of any publicly owned business, at least 51 percent of the stock of which is owned by one or more women; and

(2) Whose management and daily business operations are controlled by one or more women.

(d) *Notice*. (1) If this solicitation is for supplies and has been set aside, in whole or in part, for small business concerns, then the clause in this solicitation providing notice of the set-aside contains restrictions on the source of the end items to be furnished.

(2) Under 15 U.S.C. 645(d), any person who misrepresents a firm's status as a small, HUBZone small, small disadvantaged, or women-owned small business concern in order to obtain a contract to be awarded under the preference programs established pursuant to section 8(a), 8(d), 9, or 15 of the Small Business Act or any other provision of Federal law that specifically references section 8(d) for a definition of program eligibility, shall—

(i) Be punished by imposition of fine, imprisonment, or both;

(ii) Be subject to administrative remedies, including suspension and debarment; and

(iii) Be ineligible for participation in programs conducted under the authority of the Act.

(End of provision)

12. (FAR 52.219-2) <u>EQUAL LOW BIDS (OCT 1995)</u>

(a) This provision applies to small business concerns only.

(b) The bidder's status as a labor surplus area (LSA) concern may affect entitlement to award in case of tie bids. If the bidder wishes to be considered for this priority, the bidder must identify, in the following space, the LSA in which the costs to be incurred on account of manufacturing or production (by the bidder or the first-tier subcontractors) amount to more than 50 percent of the contract price.

_____ _____

_____ _____

(c) Failure to identify the labor surplus areas as specified in paragraph (b) of this provision will preclude the bidder from receiving priority consideration. If the bidder is awarded a contract as a result of receiving priority consideration under this provision and would not have otherwise received award, the bidder shall perform the contract or cause the contract to be performed in accordance with the obligations of an LSA concern.

13. RESERVED

14. (FARS 52.219-19) SMALL BUSINESS CONCERN REPRESENTATION FOR THE SMALL BUSINESS COMPETITIVENESS DEMONSTRATION PROGRAM (OCT 2000).

(a) *Definition*. "Emerging small business" as used in this solicitation, means a small business concern whose size is no greater than 50 percent of the numerical size standard applicable to the North American Industry Classification System (NAICS) code assigned to a contracting opportunity.

(b) (Complete only if Offeror has represented itself under the provision at FAR 52.219-1 as a small business concern under the size standards of this solicitation.) The Offeror [ ] is, [ ] is not an emerging small business.

(c) (Complete only if the Offeror is a small business or an emerging small business, indicating its size range.)

Offeror's number of employees for the past 12 months (check this column if size standard stated in solicitation is expressed in terms of number of employees) or Offeror's average annual gross revenue for the last 3 fiscal years (check this column if size standard stated in solicitation is expressed in terms of annual receipts). (Check one of the following.)

No. of Employees	Average Annual Gross Revenues
_____50 or fewer	_____$1 million or less
_____51 - 100	_____$1,000,001 - $2 million
_____101 - 250	_____$2,000,001 - $3.5 million
_____251 - 500	_____$3,500,001 - $5 million
_____501 - 750	_____$5,000,001 - $10 million
_____751 - 1,000	_____$10,000,001 - $17 million
_____Over 1,000	_____Over $17 million

15. (FARS 52.219-21) SMALL BUSINESS SIZE REPRESENTATION FOR TARGETED INDUSTRY CATEGORIES UNDER THE SMALL BUSINESS COMPETITIVENESS DEMONSTRATION PROGRAM (MAY 1999).

[Complete only if the Offeror has represented itself under the provision at 52.219-1 as a small business concern under the size standards of this solicitation.]

Offeror's number of employees for the past 12 months *[check this column if size standard stated in solicitation is expressed in terms of number of employees]* or Offeror's average annual gross revenue for the last 3 fiscal years [check this column if size standard in solicitation is expressed in terms of annual receipts]. *[Check one of the following.]*

No. of Employees	Average Annual Gross Revenues
_____50 or fewer	_____$1 million or less
_____51 - 100	_____$1,000,001 - $2 million
_____101 - 250	_____$2,000,001 - $3.5 million
_____251 - 500	_____$3,500,001 - $5 million
_____501 - 750	_____$5,000,001 - $10 million
_____751 - 1,000	_____$10,000,001 - $17 million
_____Over 1,000	_____Over $17 million

16. (FAR 52.222-21) CERTIFICATION OF NONSEGREGATED FACILITIES (FEB 1999)

(a) "Segregated facilities," as used in this clause, means any waiting rooms, work areas, rest rooms and wash rooms, restaurants and other eating areas, time clocks, locker rooms and other storage or dressing areas, parking lots, drinking fountains, recreation or entertainment areas, transportation, and housing facilities provided for employees, that are segregated by explicit directive or are in fact segregated on the basis of race, color, religion, sex, or national origin because of written or oral policies or employee custom. The term does not include separate or single-user rest rooms or necessary dressing or sleeping areas provided to assure privacy between the sexes.

(b) The Contractor agrees that it does not and will not maintain or provide for its employees any segregated facilities at any of its establishments, and that it does not and will not permit its employees to perform their services at any location under its control where segregated facilities are maintained. The Contractor agrees that a breach of this clause is a violation of the Equal Opportunity clause in this contract.

(c) The Contractor shall include this clause in every subcontract and purchase order that is subject to the Equal Opportunity clause of this contract.

(End of clause)

17. (FAR 52.222-22) PREVIOUS CONTRACTS AND COMPLIANCE REPORTS (FEB 1999).

The offeror represents that—

(a) It [ ] has, [ ] has not participated in a previous contract or subcontract subject the Equal Opportunity clause of this solicitation;

(b) It [ ] has, [ ] has not filed all required compliance reports; and

(c) Representations indicating submission of required compliance reports, signed by proposed subcontractors, will be obtained before subcontract awards.

(End of provision)

18. (FAR 52.223-4) RECOVERED MATERIAL CERTIFICATION (OCT 1997)

As required by the Resource Conservation and Recovery Act of 1976 (42 U.S.C. 6962(c)(3)(A)(i)), the offeror certifies, by signing this offer, that the percentage of recovered materials to be used in the performance of the contract will be at least the amount required by the applicable contract specifications.

(End of provision)

19. (FAR 52.223-13) CERTIFICATION OF TOXIC CHEMICAL RELEASE REPORTING (AUG 2003) [For Contracts over $100,000]

(a) Executive Order 13148, of April 21, 2000, Greening the Government through Leadership in Environmental Management, requires submission of this certification as a prerequisite for contract award.

(b) By signing this offer, the offeror certifies that—

(1) As the owner or operator of facilities that will be used in the performance of this contract that are subject to the filing and reporting requirements described in section 313 of the Emergency Planning and Community Right-to-Know Act of 1986 (EPCRA) (42 U.S.C. 11023) and section 6607 of the Pollution Prevention Act of 1990 (PPA) (42 U.S.C. 13106), the offeror will file and continue to file for such facilities for the life of the contract the Toxic Chemical Release Inventory Form (Form R) as described in sections 313(a) and (g) of EPCRA and section 6607 of PPA; or

(2) None of its owned or operated facilities to be used in the performance of this contract is subject to the Form R filing and reporting requirements because each such facility is exempt for at least one of the following reasons: [*Chec k each block that is applicable*.]

[ ] (i) The facility does not manufacture, process, or otherwise use any toxic chemicals listed in 40 CFR 372.65;

[ ] (ii) The facility does not have 10 or more fulltime employees as specified in section 313(b)(1)(A) of EPCRA, 42 U.S.C. 11023(b)(1)(A);

[ ] (iii) The facility does not meet the reporting thresholds of toxic chemicals established under section 313(f) of EPCRA, 42 U.S.C. 11023(f) (including the alternate thresholds at 40 CFR 372.27, provided an appropriate certification form has been filed with EPA);

[ ] (iv) The facility does not fall within the following Standard Industrial Classification (SIC) codes or their corresponding North American Industry Classification System sectors:

(A) Major group code 10 (except 1011, 1081, and 1094.

(B) Major group code 12 (except 1241).

(C) Major group codes 20 through 39.

(D) Industry code 4911, 4931, or 4939 (limited to facilities that combust coal and/or oil for the purpose of generating power for distribution in commerce).

(E) Industry code 4953 (limited to facilities regulated under the Resource Conservation and Recovery Act, Subtitle C (42 U.S.C. 6921, *et seq*.), or 5169, or 5171, or 7389 (limited to facilities primarily engaged in solvent recovery services on a contract or fee basis); or

[ ] (v) The facility is not located in the United States or its outlying areas..

(End of provision)

20. (DFARS 252.225-7031) SECONDARY ARAB BOYCOTT OF ISRAEL (APR 2003)

(a) *Definitions.* As used in this provision-

(1) "Foreign person" means any person (including any individual, partnership, corporation, or other form of association) other than a United States person.

(2) "United States person" is defined in 50 U.S.C. App. 2415(2) and means-

(i) Any United States resident or national (other than an individual resident outside the United States who is employed by other than a United States person);

(ii) Any domestic concern (including any permanent domestic establishment of any foreign concern); and

(iii) Any foreign subsidiary or affiliate (including any permanent foreign establishment) of any domestic concern that is controlled in fact by such domestic concern.

(b) *Certification*. If the offeror is a foreign person, the offeror certifies, by submission of an offer, that it-

(1) Does not comply with the Secondary Arab Boycott of Israel; and

(2) Is not taking or knowingly agreeing to take any action, with respect to the Secondary Boycott of Israel by Arab countries, which 50 U.S.C. App. 2407(a) prohibits a United States person from taking.

(End of Provision)

21. (DFARS 252.247-7022) REPRESENTATION OF EXTENT OF TRANSPORTATION BY SEA (AUG 1992).

(a) The Offeror shall indicate by checking the appropriate blank in paragraph (b) of this provision whether transportation of supplies by sea is anticipated under the resultant contract. The term "supplies" is defined in the Transportation of Supplies by Sea clause of this solicitation.

(b) <u>REPRESENTATION</u>. The Offeror represents that it-

_____ Does anticipate that supplies will be transported by sea in the performance of any contract or subcontract resulting from this solicitation.

_____ Does not anticipate that supplies will be transported by sea in the performance of any contract or subcontract resulting from this solicitation.

(c) Any contract resulting from this solicitation will include the Transportation of Supplies by Sea Clause. If the Offeror represents that it will not use ocean transportation, the resulting contract will also include the Defense FAR Supplement clause at 252.247-7024, Notification of Transportation of Supplies by Sea.

This page was intentionally left blank for duplex printing.

SECTION 00700

CONTRACT CLAUSES

INDEX

* - CONTRACT CLAUSES THAT MAY BE INCORPORATED BY REFERENCE

1. FAR 52.252-2 CLAUSES INCORPORATED BY REFERENCE (FEB 1998)
2. DFARS 252.201-7000 CONTRACTING OFFICER'S REPRESENTATIVE (DEC 1991)
3. *FAR 52.202-1 DEFINITIONS (DEC 2001) ALTERNATE I (MAY 2001)
4. *FAR 52.203-3 GRATUITIES (APR 1984)
5. *FAR 52.203-5 COVENANT AGAINST CONTINGENT FEES (APR 1984)
6. *FAR 52.203-7 ANTI-KICKBACK PROCEDURES (JUL 1995)
7. *FAR 52.203-8 CANCELLATION, RESCISSION, AND RECOVERY OF FUNDS FOR ILLEGAL OR IMPROPER ACTIVITY (JAN 1997)
8. DFARS 252.203-7001 PROHIBITION ON PERSONS CONVICTED OF FRAUD OR OTHER DEFENSE—CONTRACT-RELATED FELONIES (MARCH 1999)
9. DFARS 252.203-7002 DISPLAY OF DOD HOTLINE POSTER (DEC 1991) (For Military Contracts Exceeding $5,000,000)
10. *FAR 52.203-10 PRICE OR FEE ADJUSTMENT FOR ILLEGAL OR IMPROPER ACTIVITY (JAN 1997)
11. *FAR 52.203-12 LIMITATION ON PAYMENTS TO INFLUENCE CERTAIN FEDERAL TRANSACTIONS (JUNE 2003)
12. *FAR 52.204-4 PRINTED OR COPIED DOUBLE-SIDED ON RECYCLED PAPER (AUG 2000)
13. *FAR 52.204-7 CENTRAL CONTRACTOR REGISTRATION (OCT 2003)
14. DFARS 252.204-7003 CONTROL OF GOVERNMENT PERSONNEL WORK PRODUCT (APR 1992)
15. DFARS 252.204-7004 ALTERNATE A (NOV 2003)
16. *FAR 52.209-6 PROTECTING THE GOVERNMENTS INTEREST WHEN SUBCONTRACTING WITH CONTRACTORS DEBARRED, SUSPENDED, OR PROPOSED FOR DEBARMENT (JUL 1995)
17. DFARS 252.209-7004 SUBCONTRACTING WITH FIRMS THAT ARE OWNED OR CONTROLLED BY THE GOVERNMENT OF A TERRORIST COUNTRY (MAR 1998)
18. *FAR 52.211-15 DEFENSE PRIORITY AND ALLOCATION REQUIREMENTS (SEP 1990) [For Military Contract's Only]
19. FAR 52.211-18 VARIATION IN ESTIMATED QUANTITY (APR 1984)
20. *FAR 52.214-26 AUDIT AND RECORDS--SEALED BIDDING (OCT 1997)
21. *FAR 52.214-27 PRICE REDUCTION FOR DEFECTIVE COST OR PRICING DATA—MODIFICATIONS--SEALED BIDDING (OCT 1997)
22. *FAR 52.214-28 SUBCONTRACTOR COST OR PRICING DATA--MODIFICATIONS—SEALED BIDDING (OCT 1997)
23. *FAR 52.219-4 NOTICE OF PRICE EVALUATION PREFERENCE FOR HUBZONE SMALL BUSINESS CONCERNS (JAN 1999)
24. *FAR 52.219-8 UTILIZATION OF SMALL BUSINESS CONCERNS (OCT 2000)
25. *FAR 52.219-9 SMALL BUSINESS SUBCONTRACTING PLAN (JAN 2002) [When Contracting By Negotiations]
26. *FAR 52.219-9 SMALL BUSINESS SUBCONTRACTING PLAN (JAN 2002) --ALTERNATE I (OCT 2001) [When Contracting By Sealed Bidding]
27. DFARS 252.219-7009 SECTION 8(a) DIRECT AWARD (MAR 2002) [When Competitive 8(a) Contracting Procedures are used]
28. *FAR 52.219-14 LIMITATIONS ON SUBCONTRACTING (DEC 1996) [For Small Business Set Aside

Only]
29. *FAR 52.219-16 LIQUIDATED DAMAGES-SUBCONTRACTING PLAN (JAN 1999)
30. DFARS 252.219-7010 ALTERNATE A (JUN 1998) [When Competitive 8(a) Contracting Procedures are used]
31. FAR 52.219-18 NOTIFICATION OF COMPETITION LIMITED TO ELIGIBLE 8(A) CONCERNS (JUNE 2003) [When Competitive 8(a) Contracting Procedures are used]
32. DFARS 252.219-7003 SMALL, SMALL DISADVANTAGED AND WOMEN-OWNED SMALL BUSINESS SUBCONTRACTING PLAN (DOD CONTRACTS) (APR 1996)
33. DFARS 252.219-7004 SMALL, SMALL DISADVANTAGED AND WOMEN-OWNED SMALL BUSINESS SUBCONTRACTING PLAN (TEST PROGRAM) (JUN 1997)
34. *FAR 52.222-3 CONVICT LABOR (JUNE 2003)
35. *FAR 52.222-4 CONTRACT WORK HOURS AND SAFETY STANDARDS ACT—OVERTIME COMPENSATION (SEPT 2000)
36. *FAR 52.222-6 DAVIS-BACON ACT (FEB 1995)
37. *FAR 52.222-7 WITHHOLDING OF FUNDS (FEB 1988)
38. *FAR 52.222-8 PAYROLLS AND BASIC RECORDS (FEB 1988)
39. *FAR 52.222-9 APPRENTICES AND TRAINEES (FEB 1988)
40. *FAR 52.222-10 COMPLIANCE WITH COPELAND ACT REQUIREMENTS (FEB 1988)
41. *FAR 52.222-11 SUBCONTRACTS (LABOR STANDARDS) (FEB 1988)
42. *FAR 52.222-12 CONTRACT TERMINATION--DEBARMENT (FEB 1988)
43. *FAR 52.222-13 COMPLIANCE WITH DAVIS-BACON AND RELATED ACT REGULATIONS (FEB 1988)
44. *FAR 52.222-14 DISPUTES CONCERNING LABOR STANDARDS (FEB 1988)
45. *FAR 52.222-15 CERTIFICATION OF ELIGIBILITY (FEB 1988)
46. *FAR 52.222-26 EQUAL OPPORTUNITY (APR 2002)
47. *FAR 52.222-27 AFFIRMATIVE ACTION COMPLIANCE REQUIREMENTS FOR CONSTRUCTION (FEB 1999)
48. *FAR 52.222-35 EQUAL OPPORTUNITY FOR SPECIAL DISABLED VETERANS, VETERANS OF THE VIETNAM ERA, AND OTHER ELIGIBLE VETERANS (DEC 2001)
49. *FAR 52.222-36 AFFIRMATIVE ACTION FOR WORKERS WITH DISABILITIES (JUN 1998)
50. *FAR 52.222-37 EMPLOYMENT REPORTS ON SPECIAL DISABLED VETERANS, VETERANS OF THE VIETNAM ERA, AND OTHER ELIGIBLE VETERANS (DEC 2001)
51. *FAR 52.222-38 COMPLIANCE WITH VETERANS' EMPLOYMENT REPORTING REQUIREMENTS (DEC 2001)
52. *FAR 52.223-5 POLLUTION PREVENTION AND RIGHT-TO-KNOW INFORMATION (AUG 2003) [For Work on Federal Facilities]
53. *FAR 52.223-6 DRUG-FREE WORKPLACE (MAY 2001)
54. FAR 52.223-9 ESTIMATE OF PERCENTAGE OF RECOVERED MATERIAL CONTENT FOR EPA-DESIGNATED PRODUCTS (AUG 2000) [For Contracts exceeding $100,000. EPA Designated product (available at http://www.epa.gov/cpg/)]
55. *FAR 52.223-14 TOXIC CHEMICAL RELEASE REPORTING (AUG 2003) [For Contracts Over $100,000]
56. RESERVED
57. DFARS 252.223-7006 PROHIBITION ON STORAGE AND DISPOSAL OF TOXIC AND HAZARDOUS MATERIALS (APR 1993)
58. *FAR 52.225-9 BUY AMERICAN ACT—CONSTRUCTION MATERIALS (JUNE 2003) (For Contracts less than $6.481 million)
59. *FAR 52.225-10 NOTICE OF BUY AMERICAN ACT REQUIREMENT—CONSTRUCTION MATERIALS (MAY 2002) (Applicable with FAR 52.225-9)
60. *FAR 52.225-11 BUY AMERICAN ACT—CONSTRUCTION MATERIALS UNDER TRADE AGREEMENTS (JUNE 2003) [For Contracts more than $6,481,000] ALTERNATE I (MAY 2002) [For Contracts between $6.481 and 7.304733 Million]
61. *FAR 52.225-12 NOTICE OF BUY AMERICAN ACT REQUIREMENT—CONSTRUCTION MATERIALS UNDER TRADE AGREEMENTS (MAY 2002) [Applicable with FAR 52.225-11] ALTERNATE II

(MAY 2002) [For Contracts Between 6.481 and 7.344733 Million]
62. *FAR 52.225-13 RESTRICTIONS ON CERTAIN FOREIGN PURCHASES (OCT 2003)
63. DFARS 252.226-7001 UTILIZATION OF INDIAN ORGANIZATIONS, INDIAN-OWNED ECONOMIC ENTERPRISES, AND NATIVE HAWAIIAN SMALL BUSINESS CONCERNS (OCT 2003)
64. *FAR 52.227-1 AUTHORIZATION AND CONSENT (JUL 1995)
65. *FAR 52.227-2 NOTICE AND ASSISTANCE REGARDING PATENT AND COPYRIGHT INFRINGEMENT (AUG 1996)
66. *FAR 52.227-4 PATENT INDEMNITY--CONSTRUCTION CONTRACTS (APR 1984)
67. DFARS 252.227-7033 RIGHTS IN SHOP DRAWINGS (APR 1966)
68. FAR 52.228-1 BID GUARANTEE (SEP 1996) [NOTE: Not required for projects less than $100,000]
69. *FAR 52.228-2 ADDITIONAL BOND SECURITY (OCT 1997)
70. *FAR 52.228-5 INSURANCE--WORK ON A GOVERNMENT INSTALLATION (JAN 1997) [For Contracts Exceeding $100,000]
71. *FAR 52.228-11 PLEDGES OF ASSETS (FEB 1992)
72. *FAR 52.228-12 PROSPECTIVE SUBCONTRACTOR REQUESTS FOR BONDS (OCT 1995)
73. FAR 52.228-13 ALTERNATIVE PAYMENT PROTECTIONS (JULY 2000) [Applicable only for projects or delivery orders less than $100,000]
74. FAR 52.228-14 IRREVOCABLE LETTER OF CREDIT (DEC 1999)
75. FAR 52.228-15 PERFORMANCE AND PAYMENT BONDS (JULY 2000).
76. FAR 52.229-3 FEDERAL, STATE, AND LOCAL TAXES (APR 2003) [For Contracts Exceeding $100,000]
77. RESERVED
78. DFARS 252.231-7000 SUPPLEMENTAL COST PRINCIPLES (DEC 1991)
79. *FAR 52.232-5 PAYMENTS UNDER FIXED-PRICE CONSTRUCTION CONTRACTS (SEPT 2002)
80. RESERVED.
81. *FAR 52.232-17 INTEREST (JUN 1996)
82. *FAR 52.232-23 ASSIGNMENT OF CLAIMS (JAN 1986)
83. *FAR 52.232-27 PROMPT PAY FOR CONSTRUCTION CONTRACTS (OCT 2003)
84. *FAR 52.232-33 PAYMENT BY ELECTRONIC FUNDS TRANSFER –CENTRAL CONTRACTOR REGISTRATION (OCT 2003)
85. DFARS 252.232-7004 DOD PROGRESS PAYMENT RATES (OCT 2001)
86. DFARS 252.232-7005 REIMBURSEMENT OF SUBCONTRACTOR ADVANCE PAYMENTS--DOD PILOT MENTOR-PROTEGE PROGRAM (SEP 2001)
87. *FAR 52.233-1 DISPUTES (JULY 2002)
88. *FAR 52.233-3 PROTEST AFTER AWARD (AUG 1996)
89. RESERVED
90. FAR 52.236-2 DIFFERING SITE CONDITIONS (APR 1984)
91. *FAR 52.236-3 SITE INVESTIGATION AND CONDITIONS AFFECTING THE WORK (APR 1984)
92. *FAR 52.236-5 MATERIAL AND WORKMANSHIP (APR 1984)
93. RESERVED
94. *FAR 52.236-6 SUPERINTENDENCE BY THE CONTRACTOR (APR 1984)
95. FAR 52.236-7 PERMITS AND RESPONSIBILITIES (NOV 1991)
96. *FAR 52.236-8 OTHER CONTRACTS (APR 1984)
97. *FAR 52.236-9 PROTECTION OF EXISTING VEGETATION, STRUCTURES, EQUIPMENT, UTILITIES, AND IMPROVEMENTS (APR 1984)
98. *FAR 52.236-10 OPERATIONS AND STORAGE AREAS (APR 1984)
99. *FAR 52.236-11 USE AND POSSESSION PRIOR TO COMPLETION (APR 1984)
100. *FAR 52.236-12 CLEANING UP (APR 1984)
101. *FAR 52.236-13 ACCIDENT PREVENTION-ALTERNATE I (NOV 1991)
102. *FAR 52.236-14 AVAILABILITY AND USE OF UTILITY SERVICES (APR 1984)
103. FAR 52.236-15 SCHEDULES FOR CONSTRUCTION CONTRACTS (APR 1984)
104. *FAR 52.236-17 LAYOUT OF WORK (APR 1984)
105. FAR 52.236-21 SPECIFICATIONS AND DRAWINGS FOR CONSTRUCTION (FEB 1997)
106. *FAR 52.236-26 PRECONSTRUCTION CONFERENCE (FEB 1995)

107. DFARS 252.236-7000 MODIFICATION OF PROPOSALS - PRICE BREAKDOWN (DEC 1991)
108. DFARS 252.236-7008 CONTRACT PRICES - BIDDING SCHEDULES (DEC 1991)
109. *FAR 52.242-13 BANKRUPTCY (JUL 1995)
110. *FAR 52.242-14 SUSPENSION OF WORK (APR 1984)
111. FAR 52.243-4 CHANGES (AUG 1987)
112. DFARS 252.243-7001 PRICING OF CONTRACT MODIFICATIONS (DEC 1991)
113. DFARS 252.243-7002 REQUESTS FOR EQUITABLE ADJUSTMENT (MAR 1998)
114. *FAR 52.244-2 SUBCONTRACTS (AUG 1998)
115. FAR 52.244-6 SUBCONTRACTS FOR COMMERCIAL ITEMS (APR 2003)
116. *FAR 52.245-2 GOVERNMENT PROPERTY (FIXED-PRICE CONTRACTS) (JUNE 2003) [For Government Property over $100,000]
117. *FAR 52.245-4 GOVERNMENT-FURNISHED PROPERTY (SHORT FORM) (JUNE 2003) [For Government Property $100,000 or Less]
118. *FAR 52.246-12 INSPECTION OF CONSTRUCTION (AUG 1996)
119. *FAR 52.246-21 WARRANTY OF CONSTRUCTION (MAR 1994)
120. DFARS 252.247-7023 TRANSPORTATION OF SUPPLIES BY SEA (MAR 2000)
121. DFARS 252.247-7024 NOTIFICATION OF TRANSPORTATION OF SUPPLIES BY SEA (MAR 2000)
122. FAR 52.248-3 VALUE ENGINEERING--CONSTRUCTION (FEB 2000) (ALERNATE I (APR 1984)
123. *FAR 52.249-1 TERMINATION FOR CONVENIENCE OF THE GOVERNMENT (FIXED-PRICE) (SHORT FORM) (APR 1984) [For Contracts $100,000 or Less]
124. *FAR 52.249-2 TERMINATION FOR CONVENIENCE OF THE GOVERNMENT (FIXED-PRICE) ALTERNATE I (SEP 1996) [For Contracts Over $100,000]
125. *FAR 52.249-10 DEFAULT (FIXED-PRICE CONSTRUCTION) (APR 1984)
126. ENVIRONMENTAL LITIGATION (1974 NOV OCE)
127. EFARS 52.249-5000 BASIS FOR SETTLEMENT OF PROPOSALS
128. INAPPLICABLE PROVISIONS AND CLAUSES (Local Provision). [Applicable only for projects or delivery orders less than $100,000]

SECTION 00700

CONTRACT CLAUSES

1. FAR 52.252-2 CLAUSES INCORPORATED BY REFERENCE (FEB 1998)

This contract incorporates one or more clauses by reference, with the same force and effect as if they were given in full text. Upon request, the Contracting Officer will make their full text available. Also, the full text of a clause may be accessed electronically at this/these address(es):

http://www.arnet.gov/far

(End of clause)

* - CONTRACT CLAUSES THAT MAY BE INCORPORATED BY REFERENCE

2. DFARS 252.201-7000 CONTRACTING OFFICER'S REPRESENTATIVE (DEC 1991)

(a) Definition.

"Contracting officer's representative" means an individual designated in accordance with subsection 201.602-2 of the Defense Federal Acquisition Regulation Supplement and authorized in writing by the contracting officer to perform specific technical or administrative functions.

(b) If the Contracting Officer designates a contracting officer's representative (COR), the Contractor will receive a copy of the written designation. It will specify the extent of the COR's authority to act on behalf of the contracting officer. The COR is not authorized to make any commitments or changes that will affect price, quality, quantity, delivery, or any other term or condition of the contract.

(End of clause)

3. *FAR 52.202-1 DEFINITIONS (DEC 2001) ALTERNATE I (MAY 2001)

a) “Agency head” or “head of the agency” means the Secretary (Attorney General, Administrator, Governor, Chairperson, or other chief official, as appropriate) of the agency, unless otherwise indicated, including any deputy or assistant chief official of the executive agency.

(b) “Commercial component” means any component that is a commercial item.

(c) “Commercial item” means—

(1) Any item, other than real property, that is of a type customarily used by the general public or by non-governmental entities for purposes other than governmental purposes, and that—

(i) Has been sold, leased, or licensed to the general public; or

(ii) Has been offered for sale, lease, or license to the general public;

(2) Any item that evolved from an item described in paragraph (c)(1) of this clause through advances in technology or performance and that is not yet available in the commercial marketplace, but will be available in the commercial marketplace in time to satisfy the delivery requirements under a Government solicitation;

(3) Any item that would satisfy a criterion expressed in paragraphs (c)(1) or (c)(2) of this clause, but for—

(i) Modifications of a type customarily available in the commercial marketplace; or

(ii) Minor modifications of a type not customarily available in the commercial marketplace made to meet Federal Government requirements. “Minor” modifications means modifications that do not significantly alter the nongovernmental function or essential physical characteristics of an item or component, or

change the purpose of a process. Factors to be considered in determining whether a modification is minor include the value and size of the modification and the comparative value and size of the final product. Dollar values and percentages may be used as guideposts, but are not conclusive evidence that a modification is minor;

(4) Any combination of items meeting the requirements of paragraphs (c)(1), (2), (3), or (5) of this clause that are of a type customarily combined and sold in combination to the general public;

(5) Installation services, maintenance services, repair services, training services, and other services if—

(i) Such services are procured for support of an item referred to in paragraph (c)(1), (2), (3), or (4) of this definition, regardless of whether such services are provided by the same source or at the same time as the item; and

(ii) The source of such services provides similar services contemporaneously to the general public under terms and conditions similar to those offered to the Federal Government

(6) Services of a type offered and sold competitively in substantial quantities in the commercial marketplace based on established catalog or market prices for specific tasks performed under standard commercial terms and conditions. This does not include services that are sold based on hourly rates without an established catalog or market price for a specific service performed. For purposes of these services—

(i) "Catalog price" means a price included in a catalog, price list, schedule, or other form that is regularly maintained by the manufacturer or vendor, is either published or otherwise available for inspection by customers, and states prices at which sales are currently, or were last, made to a significant number of buyers constituting the general public; and

(ii) "Market prices" means current prices that are established in the course of ordinary trade between buyers and sellers free to bargain and that can be substantiated through competition or from sources independent of the offerors.

(7) Any item, combination of items, or service referred to in paragraphs (c)(1) through (c)(6), notwithstanding the fact that the item, combination of items, or service is transferred between or among separate divisions, subsidiaries, or affiliates of a Contractor; or

(8) A nondevelopmental item, if the procuring agency determines the item was developed exclusively at private expense and sold in substantial quantities, on a competitive basis, to multiple State and local Governments.

(d) "Component" means any item supplied to the Government as part of an end item or of another component, except that for use in 52.225-9, and 52.225-11 see the definitions in 52.225-9(a) and 52.225-11(a).

(e) "Contracting Officer" means a person with the authority to enter into, administer, and/or terminate contracts and make related determinations and findings. The term includes certain authorized representatives of the Contracting Officer acting within the limits of their authority as delegated by the Contracting Officer.

(f) "Nondevelopmental item" means—

(1) Any previously developed item of supply used exclusively for governmental purposes by a Federal agency, a State or local government, or a foreign government with which the United States has a mutual defense cooperation agreement;

(2) Any item described in paragraph (f)(1) of this definition that requires only minor modification or modifications of a type customarily available in the commercial marketplace in order to meet the requirements of the procuring department or agency; or

(3) Any item of supply being produced that does not meet the requirements of paragraph (f)(1) or (f)(2) solely because the item is not yet in use.

(End of clause)

4. *FAR 52.203-3 GRATUITIES (APR 1984)

(a) The right of the Contractor to proceed may be terminated by written notice if, after notice and hearing, the agency head or a designee determines that the Contractor, its agent, or another representative--

(1) Offered or gave a gratuity (e.g., an entertainment or gift) to an officer, official, or employee of the Government; and

(2) Intended, by the gratuity, to obtain a contract or favorable treatment under a contract.

(b) The facts supporting this determination may be reviewed by any court having lawful jurisdiction.

(c) If this contract is terminated under paragraph (a) above, the Government is entitled--

(1) To pursue the same remedies as in a breach of the contract; and

(2) In addition to any other damages provided by law, to exemplary damages of not less than 3 nor more than 10 times the cost incurred by the Contractor in giving gratuities to the person concerned, as determined by the agency head or a designee. (This subparagraph (c)(2) is applicable only if this contract uses money appropriated to the Department of Defense.)

(d) The rights and remedies of the Government provided in this clause shall not be exclusive and are in addition to any other rights and remedies provided by law or under this contract.

5. *FAR 52.203-5 COVENANT AGAINST CONTINGENT FEES (APR 1984)

(a) The Contractor warrants that no person or agency has been employed or retained to solicit or obtain this contract upon an agreement or understanding for a contingent fee, except a bona fide employee or agency. For breach or violation of this warranty, the Government shall have the right to annul this contract without liability or, in its discretion, to deduct from the contract price or consideration, or otherwise recover, the full amount of the contingent fee.

(b) "Bona fide agency," as used in this clause, means an established commercial or selling agency, maintained by a contractor for the purpose of securing business, that neither exerts nor proposes to exert improper influence to solicit or obtain Government contracts nor holds itself out as being able to obtain any Government contract or contracts through improper influence.

"Bona fide employee," as used in this clause, means a person, employed by a contractor and subject to the contractor's supervision and control as to time, place, and manner of performance, who neither exerts nor proposes to exert improper influence to solicit or obtain Government contracts nor holds out as being able to obtain any Government contract or contracts through improper influence.

"Contingent fee," as used in this clause, means any commission, percentage, brokerage, or other fee that is contingent upon the success that a person or concern has in securing a Government contract.

"Improper influence," as used in this clause, means any influence that induces or tends to induce a Government employee or officer to give consideration or to act regarding a Government contract on any basis other than the merits of the matter.

6. *FAR 52.203-7 ANTI-KICKBACK PROCEDURES (JUL 1995)

(a) Definitions.

"Kickback," as used in this clause, means any money, fee, commission, credit, gift, gratuity, thing of value, or compensation of any kind which is provided, directly or indirectly, to any prime Contractor, prime Contractor employee, subcontractor, or subcontractor employee for the purpose of improperly obtaining or rewarding favorable treatment in connection with a prime contract or in connection with a subcontract relating to a prime contract. "Person," as used in this clause, means a corporation, partnership, business association of any kind, trust, joint-stock company, or individual.

"Prime contract," as used in this clause, means a contract or contractual action entered into by the United States for the purpose of obtaining supplies, materials, equipment, or services of any kind.

"Prime Contractor," as used in this clause, means a person who has entered into a prime contract with the United States.

"Prime Contractor employee," as used in this clause, means any officer, partner, employee, or agent of a prime Contractor.

"Subcontract," as used in this clause, means a contract or contractual action entered into by a prime Contractor or subcontractor for the purpose of obtaining supplies, materials, equipment, or services of any kind under a prime contract.

"Subcontractor," as used in this clause, (1) means any person, other than the prime Contractor, who offers to furnish or furnishes any supplies, materials, equipment, or services of any kind under a prime contract or a

subcontract entered into in connection with such prime contract, and (2) includes any person who offers to furnish or furnishes general supplies to the prime Contractor or a higher tier subcontractor.

"Subcontractor employee," as used in this clause, means any officer, partner, employee, or agent of a subcontractor.

(b) The Anti-Kickback Act of 1986 (41 U.S.C. 51-58) (the Act), prohibits any person from--

(1) Providing or attempting to provide or offering to provide any kickback;

(2) Soliciting, accepting, or attempting to accept any kickback; or

(3) Including, directly or indirectly, the amount of any kickback in the contract price charged by a prime Contractor to the United States or in the contract price charged by a subcontractor to a prime Contractor or higher tier subcontractor.

(c) (1) The Contractor shall have in place and follow reasonable procedures designed to prevent and detect possible violations described in paragraph (b) of this clause in its own operations and direct business relationships.

(2) When the Contractor has reasonable grounds to believe that a violation described in paragraph (b) of this clause may have occurred, the Contractor shall promptly report in writing the possible violation. Such reports shall be made to the inspector general of the contracting agency, the head of the contracting agency if the agency does not have an inspector general, or the Department of Justice.

(3) The Contractor shall cooperate fully with any Federal agency investigating a possible violation described in paragraph (b) of this clause.

(4) The Contracting Officer may

(i) offset the amount of the kickback against any monies owed by the United States under the prime contract and/or

(ii) direct that the Prime Contractor withhold from sums owed a subcontractor under the prime contract the amount of the kickback. The Contracting Officer may order that monies withheld under subdivision (c)(4)(ii) of this clause be paid over to the Government unless the Government has already offset those monies under subdivision (c)(4)(i) of this clause. In either case, the Prime Contractor shall notify the Contracting Officer when the monies are withheld.

(5) The Contractor agrees to incorporate the substance of this clause, including subparagraph (c)(5) but excepting subparagraph (c)(1), in all subcontracts under this contract which exceed $100,000.

7. *FAR 52.203-8 CANCELLATION, RESCISSION, AND RECOVERY OF FUNDS FOR ILLEGAL OR IMPROPER ACTIVITY (JAN 1997)

(a) If the Government receives information that a contractor or a person has engaged in conduct constituting a violation of subsection (a), (b), (c), or (d) of Section 27 of the Office of Federal Procurement Policy Act (41 U.S.C. 423) (the Act), as amended by section 4304 of the National Defense Authorization Act for Fiscal Year 1996 (Pub. L. 104-106), the Government may--

(1) Cancel the solicitation, if the contract has not yet been awarded or issued; or

(2) Rescind the contract with respect to which--

(i) The Contractor or someone acting for the Contractor has been convicted for an offense where the conduct constitutes a violation of subsection 27 (a) or (b) of the Act for the purpose of either--

(A) Exchanging the information covered by such subsections for anything of value; or

(B) Obtaining or giving anyone a competitive advantage in the award of a Federal agency procurement contract; or

(ii) The head of the contracting activity has determined, based upon a preponderance of the evidence, that the Contractor or someone acting for the Contractor has engaged in conduct constituting an offense punishable under subsection 27(e)(1) of the Act.

(b) If the Government rescinds the contract under paragraph (a) of this clause, the Government is entitled to recover, in addition to any penalty prescribed by law, the amount expended under the contract.

(c) The rights and remedies of the Government specified herein are not exclusive, and are in addition to any other rights and remedies provided by law, regulation, or under this contract.

8. DFARS 252.203-7001 PROHIBITION ON PERSONS CONVICTED OF FRAUD OR OTHER DEFENSE—CONTRACT-RELATED FELONIES (MARCH 1999)

(a) Definitions.

As used in this clause--

(1) "Arising out of a contract with the "DoD" means any any act in connection with--

(i) Attempting to obtain;

(ii) Obtaining; or

(iii) Performing a contract or first-tier subcontract of any department, or component of the Department of Defense (DoD).

(2) "Conviction of fraud or any other felony," means any conviction for fraud or a felony in violation of state or Federal criminal statutes, whether entered on a verdict or plea, including a plea of nolo contendere, for which sentence has been imposed.

(3) "Date of conviction," means the date judgement was entered against the individual.

(b) Any individual who is convicted after September 29, 1988 of fraud or any other felony arising out of a contract with the DoD is prohibited from serving--

(1) In a management or supervisory capacity on any DoD contract or first-tier subcontract;

(2) On board of directors of any DoD Contractor or first-tier subcontractor;

(3) As a consultant to any DoD Contractor or first-tier subcontractor; or

(4) In any other capacity with the authority to influence, advise, or control the decisions of any DoD contractor or subcontractor with regard to any DoD contract or first-tier subcontract.

(c) Unless waived, the prohibition in paragraph (b) of this clause applies for not less than five years from the date of conviction.

(d) 10 U.S.C. 2408 provides that a defense Contractor or first-tier subcontractor shall be subject to a criminal penalty of not more than $500,000 if convicted of knowingly--

(1) Employing a person under a prohibition in paragraph (b) of this clause;

(2) Allowing such a person to serve on the board of directors of Contractor or first-tier subcontractor.

(e) In addition to the criminal penalties contained in 10 U.S.C. 2408, the Government may consider other available remedies, such as--

(1) Suspension or debarment;

(2) Cancellation of the contract at no cost to the Government; or

(3) Termination of the contract for default.

(f) The Contractor may submit written requests for waiver of the prohibition in paragraph (b) of this clause to the Contracting Officer. Requests shall clearly identify--

(1) The person involved;

(2) The nature of the conviction and resultant sentence or punishment imposed;

(3) The reasons for the requested waiver; and

(4) An explanation of why a waiver is in the interest of national security.

(g) The Contractor agrees to include the substance of this clause appropriately modified to reflect the identity and relationship of the parties, in all first-tier subcontracts exceeding the simplified acquisition threshold in Part 2 of the Federal Acquisition Regulation, except those for commercial items or components.

(h) Pursuant to 10 U.S.C.2408(c), defense contractors and subcontractors may obtain information as to whether a particular has been convicted of fraud or any other felony arising out of a contract with the DoD by contracting The Office of Justice Programs, The Denial of Federal Benefits Office, U.S. Department of Justice, telephone (202) 616-3507.

9. DFARS 252.203-7002 DISPLAY OF DOD HOTLINE POSTER (DEC 1991) (<u>For Military Contracts Exceeding $5,000,000</u>)

(a) The Contractor shall display prominently in common work areas within business segments performing work under Department of Defense (DoD) contracts, DoD Hotline Posters prepared by DoD Office of the Inspector General.

(b) DoD Hotline Posters may be obtained from the DoD Inspector General, ATTN: Defense Hotline, 400 Army Navy Drive, Washington DC 22202-2884.

(c) The Contract need not comply with paragraph (a) of this clause if it has established a mechanism, such as a hotline, by which employees may report suspected instances of improper conduct, and instructions that encourage employees to make such reports.

10. *FAR 52.203-10 PRICE OR FEE ADJUSTMENT FOR ILLEGAL OR IMPROPER ACTIVITY (JAN 1997)

(a) The Government, at its election, may reduce the price of a fixed-price type contract and the total cost and fee under a cost-type contract of profit or fee determined as set forth in paragraph (b) of this clause if the head of the contracting activity or designee determines that there was a violation of subsection 27(a), (b), or (c) of the Office of Federal Procurement Policy Act, as amended (41 U.S.C. 423), as implemented in section 3.104 of the Federal Acquisition Regulation.

(b) The price or fee reduction referred to in paragraph (a) of this clause shall be--

(1) For cost-plus-fixed-fee contracts, the amount of the fee specified in the contract at the time of award;

(2) For cost-plus-incentive-fee contracts, the target fee specified in the contract at the time of award, notwithstanding any minimum fee or "fee floor" specified in the contract;

(3) For cost-plus-award-fee contracts--

(i) The base fee established in the contract at the time of contract award;

(ii) If no base fee is specified in the contract, 30 percent of the amount of each award fee otherwise payable to the Contractor for each award fee evaluation period or at each award fee determination point.

(4) For fixed-price-incentive contracts, the Government may--

(i) Reduce the contract target price and contract target profit both by an amount equal to the initial target profit specified in the contract at the time of contract award; or

(ii) If an immediate adjustment to the contract target price and contract target profit would have a significant adverse impact on the incentive price revision relationship under the contract, or adversely affect the contract financing provisions, the Contracting Officer may defer such adjustment until establishment of the total final price of the contract. The total final price established in accordance with the incentive price revision provisions of the contract shall be reduced by an amount equal to the initial target profit specified in the contract at the time of contract award and such reduced price shall be the total final contract price.

(5) For firm-fixed-price contracts, by 10 percent of the initial contract price or a profit amount determined by the Contracting Officer from records or documents in existence prior to the date of the contract award.

(c) The Government may, at its election, reduce a prime contractor's price or fee in accordance with the procedures of paragraph (b) of this clause for violations of the Act by its subcontractors by an amount not to exceed the amount of profit or fee reflected in the subcontract at the time the subcontract was first definitively priced.

(d) In addition to the remedies in paragraphs (a) and (c) of this clause, the Government may terminate this contract for default. The rights and remedies of the Government specified herein are not exclusive, and are in addition to any other rights and remedies provided by law or under this contract.

11. *FAR 52.203-12 LIMITATION ON PAYMENTS TO INFLUENCE CERTAIN FEDERAL TRANSACTIONS (JUNE 2003)

(a) Definitions.

"Agency," as used in this clause, means executive agency as defined in 2.101.

"Covered Federal Action," as used in this clause, means any of the following Federal actions:

(1) The awarding of any Federal contract.

(2) The making of any Federal grant.

(3) The making of any Federal loan.

(4) The entering into of any cooperative agreement.

(5) The extension, continuation, renewal, amendment, or modification of any Federal contract, grant, loan, or cooperative agreement.

"Indian tribe" and "tribal organization," as used in this clause, have the meaning provided in section 4 of the Indian Self-Determination and Education Assistance Act (25 U.S.C. 450B) and include Alaskan Natives.

"Influencing or attempting to influence," as used in this clause, means making, with the intent to influence, any communication to or appearance before an officer or employee of any agency, a Member of Congress, an officer or employee of Congress, or an employee of a Member of Congress in connection with any covered Federal action.

"Local government," as used in this clause, means a unit of government in a State and, if chartered, established, or otherwise recognized by a State for the performance of a governmental duty, including a local public authority, a special district, an intrastate district, a council of governments, a sponsor group representative organization, and any other instrumentality of a local government.

"Officer or employee of an agency," as used in this clause, includes the following individuals who are employed by an agency:

(1) An individual who is appointed to a position in the Government under title 5, United States Code, including a position under a temporary appointment.

(2) A member of the uniformed services, as defined in subsection 101(3), title 37, United States Code.

(3) A special Government employee, as defined in section 202, title 18, United States Code.

(4) An individual who is a member of a Federal advisory committee, as defined by the Federal Advisory Committee Act, title 5, United States Code, appendix 2.

"Person," as used in this clause, means an individual, corporation, company, association, authority, firm, partnership, society, State and local government, regardless of whether such entity is operated for profit, or not for profit. This term excludes an Indian tribe, tribal organization, or any other Indian organization with respect to expenditures specifically permitted by other Federal law.

"Reasonable compensation," as used in this clause, means, with respect to a regularly employed officer or employee of any person, compensation that is consistent with the normal compensation for such officer or employee for work that is not furnished to, not funded by, or not furnished in cooperation with the Federal Government.

"Reasonable payment," as used in this clause, means, with respect to professional and other technical services, a payment in an amount that is consistent with the amount normally paid for such services in the private sector.

"Recipient," as used in this clause, includes the Contractor and all subcontractors. This term excludes an Indian tribe, tribal organization, or any other Indian organization with respect to expenditures specifically permitted by other Federal law.

"Regularly employed," as used in this clause, means, with respect to an officer or employee of a person requesting or receiving a Federal contract, an officer or employee who is employed by such person for at least 130 working days within 1 year immediately preceding the date of the submission that initiates agency consideration of such person for receipt of such contract. An officer or employee who is employed by such person for less than 130 working days within 1 year immediately preceding the date of the submission that initiates agency consideration of such person shall be considered to be regularly employed as soon as he or she is employed by such person for 130 working days.

"State," as used in this clause, means a State of the United States, the District of Columbia, or an outlying area of the United States, an agency or instrumentality of a State, and multi-State, regional, or interstate entity having governmental duties and powers.

(b) Prohibitions.

(1) Section 1352 of title 31, United States Code, among other things, prohibits a recipient of a Federal Contract, grant, loan, or cooperative agreement from using appropriated funds to pay any person for influencing or attempting to influence an officer or employee of any agency, a Member of Congress, an officer or employee of Congress, or an employee of a Member of Congress in connection with any of the following covered Federal actions: The awarding of any Federal contract; the making of any Federal grant; the making of any Federal loan; the entering into of any cooperative agreement; or the modification of any Federal contract, grant, loan, or cooperative agreement.

(2) The Act also requires Contractors to furnish a disclosure if any funds other than Federal appropriated funds (including profit or fee received under a covered Federal transaction) have been paid, or will be paid, to any person for influencing or attempting to influence an officer or employee of any agency, a Member of Congress, an officer or employee of Congress, or an employee of a Member of Congress in connection with a Federal contract, grant, loan, or cooperative agreement.

(3) The prohibitions of the Act do not apply under the following conditions:

(i) Agency and legislative liaison by own employees.

(A) The prohibition on the use of appropriated funds, in subparagraph (b)(1) of this clause, does not apply in the case of a payment of reasonable compensation made to an officer or employee of a person requesting or receiving a covered Federal action if the payment is for agency and legislative liaison activities not directly related to a covered Federal action.

(B) For purposes of subdivision (b)(3)(i)(A) of this clause, providing any information specifically requested by an agency or Congress is permitted at any time.

(C) The following agency and legislative liaison activities are permitted at any time where they are not related to a specific solicitation for any covered Federal action:

(1) Discussing with an agency the qualities and characteristics (including individual demonstrations) of the person's products or services, conditions or terms of sale, and service capabilities.

(2) Technical discussions and other activities regarding the application or adaptation of the person's products or services for an agency's use.

(D) The following agency and legislative liaison activities are permitted where they are prior to formal solicitation of any covered Federal action--

(1) Providing any information not specifically requested but necessary for an agency to make an informed decision about initiation of a covered Federal action;

(2) Technical discussions regarding the preparation of an unsolicited proposal prior to its official submission; and

(3) Capability presentations by persons seeking awards from an agency pursuant to the provisions of the Small Business Act, as amended by Pub. L. 95-507, and subsequent amendments.

(E) Only those services expressly authorized by subdivision (b)(3)(i)(A) of this clause are permitted under this clause.

(ii) Professional and technical services.

(A) The prohibition on the use of appropriated funds, in subparagraph (b)(1) of this clause, does not apply in the case of--

(1) A payment of reasonable compensation made to an officer or employee f a person requesting or receiving a covered Federal action or an extension, continuation, renewal, amendment, or modification of a covered Federal action, if payment is for professional or technical services rendered directly in the preparation, submission, or negotiation of any bid, proposal, or application for that Federal action or for meeting requirements imposed by or pursuant to law as a condition for receiving that Federal action.

(2) Any reasonable payment to a person, other than an officer or employee of a person requesting or receiving a covered Federal action or an extension, continuation, renewal, amendment, or modification of a covered Federal action if the payment is for professional or technical services rendered directly in the preparation, submission, or negotiation of any bid, proposal, or application for that Federal action or for meeting requirements imposed by or pursuant to law as a condition for receiving that Federal action. Persons other than officers or employees of a person requesting or receiving a covered Federal action include consultants and trade associations.

(B) For purposes of subdivision (b)(3)(ii)(A) of this clause, "professional and technical services" shall be limited to advice and analysis directly applying any professional or technical discipline. For example, drafting of a legal document accompanying a bid or proposal by a lawyer is allowable. Similarly, technical advice provided by an engineer on the performance or operational capability of a piece of equipment rendered directly in the negotiation of a contract is allowable. However, communications with the intent to influence made by a professional (such as a licensed lawyer) or a technical person (such as a licensed accountant) are not allowable under this section unless they provide advice and analysis directly applying their professional or technical expertise and unless the advice or analysis is rendered directly and solely in the preparation, submission or

negotiation of a covered Federal action. Thus, for example, communications with the intent to influence made by a lawyer that do not provide legal advice or analysis directly and solely related to the legal aspects of his or her client's proposal, but generally advocate one proposal over another are not allowable under this section because the lawyer is not providing professional legal services. Similarly, communications with the intent to influence made by an engineer providing an engineering analysis prior to the preparation or submission of a bid or proposal are not allowable under this section since the engineer is providing technical services but not directly in the preparation, submission or negotiation of a covered Federal action.

(C) Requirements imposed by or pursuant to law as a condition for receiving a covered Federal award include those required by law or regulation and any other requirements in the actual award documents.

(D) Only those services expressly authorized by subdivisions (b)(3)(ii)(A)(1) and (2) of this clause are permitted under this clause.

(E) The reporting requirements of FAR 3.803(a) shall not apply with respect to payments of reasonable compensation made to regularly employed officers or employees of a person.

(iii) Disclosure.

(A) The Contractor who requests or receives from an agency a Federal contract shall file with that agency a disclosure form, OMB standard form LLL, Disclosure of Lobbying Activities, if such person has made or has agreed to make any payment using nonappropriated funds (to include profits from any covered Federal action), which would be prohibited under subparagraph (b)(1) of this clause, if paid for with appropriated funds.

(B) The Contractor shall file a disclosure form at the end of each calendar quarter in which there occurs any event that materially affects the accuracy of the information contained in any disclosure form previously filed by such person under subparagraph (c)(1) of this clause. An event that materially affects the accuracy of the information reported includes--

(1) A cumulative increase of $25,000 or more in the amount paid or expected to be paid for influencing or attempting to influence a covered Federal action; or

(2) A change in the person(s) or individual(s) influencing or attempting to influence a covered Federal action; or

(3) A change in the officer(s), employee(s), or Member(s) contacted to influence or attempt to influence a covered Federal action.

(C) The Contractor shall require the submittal of a certification, and if required, a disclosure form by any person who requests or receives any subcontract exceeding $100,000 under the Federal contract.

(D) All subcontractor disclosure forms (but not certifications) shall be forwarded from tier to tier until received by the prime Contractor. The prime Contractor shall submit all disclosures to the Contracting Officer at the end of the calendar quarter in which the disclosure form is submitted by the subcontractor. Each subcontractor certification shall be retained in the subcontract file of the awarding Contractor.

(iv) Agreement. The Contractor agrees not to make any payment prohibited by this clause.

(v) Penalties.

(A) Any person who makes an expenditure prohibited under paragraph (a) of this clause or who fails to file or amend the disclosure form to be filed or amended by paragraph (b) of this clause shall be subject to civil penalties as provided for by 31 U.S.C. 1352. An imposition of a civil penalty does not prevent the Government from seeking any other remedy that may be applicable.

(B) Contractors may rely without liability on the representation made by their subcontractors in the certification and disclosure form.

(vi) Cost allowability. Nothing in this clause makes allowable or reasonable any costs which would otherwise be unallowable or unreasonable. Conversely, costs made specifically unallowable by the requirements in this clause will not be made allowable under any other provision.

12. *FAR 52.204-4 PRINTED OR COPIED DOUBLE-SIDED ON RECYCLED PAPER (AUG 2000)

(a) Definitions. As used in this clause—

"Postconsumer material" means a material or finished product that has served its intended use and has been discarded for disposal or recovery, having completed its life as a consumer item. Postconsumer material is a part of the broader category of "recovered material." For paper and paper products, postconsumer material means "postconsumer fiber" defined by the U.S. Environmental Protection Agency (EPA) as—

(1) Paper, paperboard, and fibrous materials from retail stores, office buildings, homes, and so forth, after they have passed through their end-usage as a consumer item, including: used corrugated boxes; old newspapers; old magazines; mixed waste paper; tabulating cards; and used cordage; or

(2) All paper, paperboard, and fibrous materials that enter and are collected from municipal solid waste; but not

(3) Fiber derived from printers' over-runs, converters' scrap, and over-issue publications.

"Printed or copied double-sided" means printing or reproducing a document so that information is on both sides of a sheet of paper.

"Recovered material," for paper and paper products, is defined by EPA in its Comprehensive Procurement Guideline as "recovered fiber" and means the following materials:

(1) Postconsumer fiber; and

(2) Manufacturing wastes such as—

(i) Dry paper and paperboard waste generated after completion of the papermaking process (that is, those manufacturing operations up to and including the cutting and trimming of the paper machine reel into smaller rolls or rough sheets) including: envelope cuttings, bindery trimmings, and other paper and paperboard waste resulting from printing, cutting, forming, and other converting operations; bag, box, and carton manufacturing wastes; and butt rolls, mill wrappers, and rejected unused stock; and

(ii) Repulped finished paper and paperboard from obsolete inventories of paper and paperboard manufacturers, merchants, wholesalers, dealers, printers, converters, or others.

(b) In accordance with Section 101 of Executive Order 13101 of September 14, 1998, Greening the Government through Waste Prevention, Recycling, and Federal Acquisition, the Contractor is encouraged to submit paper documents, such as offers, letters, or reports, that are printed or copied double-sided on recycled paper that meet minimum content standards specified in Section 505 of Executive Order 13101, when not using electronic commerce methods to submit information or data to the Government.

(c) If the Contractor cannot purchase high-speed copier paper, offset paper, forms bond, computer printout paper, carbonless paper, file folders, white wove envelopes, writing and office paper, book paper, cotton fiber paper, and cover stock meeting the 30 percent postconsumer material standard for use in submitting paper documents to the Government, it should use paper containing no less than 20 percent postconsumer material. This lesser standard should be used only when paper meeting the 30 percent postconsumer material standard is not obtainable at a reasonable price or does not meet reasonable performance standards.

(End of clause)

13. *FAR 52.204-7 CENTRAL CONTRACTOR REGISTRATION (OCT 2003)

(a) Definitions. As used in this clause—

"Central Contractor Registration (CCR) database" means the primary Government repository for Contractor information required for the conduct of business with the Government.

"Data Universal Numbering System (DUNS) number" means the 9-digit number assigned by Dun and Bradstreet, Inc. (D&B) to identify unique business entities.

"Data Universal Numbering System +4 (DUNS+4) number" means the DUNS number assigned by D&B plus a 4-character suffix that may be assigned by a business concern. (D&B has no affiliation with this 4-character suffix.) This 4-character suffix may be assigned at the discretion of the business concern to establish additional CCR records for identifying alternative Electronic Funds Transfer (EFT) accounts (see the FAR at Subpart 32.11) for the same parent concern.

"Registered in the CCR database" means that—

(1) The Contractor has entered all mandatory information, including the DUNS number or the DUNS+4 number, into the CCR database; and

(2) The Government has validated all mandatory data fields and has marked the record "Active".

(b)(1) By submission of an offer, the offeror acknowledges the requirement that a prospective awardee shall be registered in the CCR database prior to award, during performance, and through final payment of any contract, basic agreement, basic ordering agreement, or blanket purchasing agreement resulting from this solicitation.

(2) The offeror shall enter, in the block with its name and address on the cover page of its offer, the annotation "DUNS" or "DUNS +4" followed by the DUNS or DUNS +4 number that identifies the offeror's name and address exactly as stated in the offer. The DUNS number will be used by the Contracting Officer to verify that the offeror is registered in the CCR database.

(c) If the offeror does not have a DUNS number, it should contact Dun and Bradstreet directly to obtain one.

(1) An offeror may obtain a DUNS number—

(i) If located within the United States, by calling Dun and Bradstreet at 1-866-705-5711 or via the Internet at *http://www.dnb.com*; or

(ii) If located outside the United States, by contacting the local Dun and Bradstreet office.

(2) The offeror should be prepared to provide the following information:

(i) Company legal business.

(ii) Tradestyle, doing business, or other name by which your entity is commonly recognized.

(iii) Company Physical Street Address, City, State, and Zip Code.

(iv) Company Mailing Address, City, State and Zip Code (if separate from physical).

(v) Company Telephone Number.

(vi) Date the company was started.

(vii) Number of employees at your location.

(viii) Chief executive officer/key manager.

(ix) Line of business (industry).

(x) Company Headquarters name and address (reporting relationship within your entity).

(d) If the Offeror does not become registered in the CCR database in the time prescribed by the Contracting Officer, the Contracting Officer will proceed to award to the next otherwise successful registered Offeror.

(e) Processing time, which normally takes 48 hours, should be taken into consideration when registering. Offerors who are not registered should consider applying for registration immediately upon receipt of this solicitation.

(f) The Contractor is responsible for the accuracy and completeness of the data within the CCR database, and for any liability resulting from the Government's reliance on inaccurate or incomplete data. To remain registered in the CCR database after the initial registration, the Contractor is required to review and update on an annual basis from the date of initial registration or subsequent updates its information in the CCR database to ensure it is current, accurate and complete. Updating information in the CCR does not alter the terms and conditions of this contract and is not a substitute for a properly executed contractual document.

(g) (1) (i) If a Contractor has legally changed its business name, "doing business as" name, or division name (whichever is shown on the contract), or has transferred the assets used in performing the contract, but has not completed the necessary requirements regarding novation and change-of name agreements in Subpart 42.12, the Contractor shall provide the responsible Contracting Officer a minimum of one business day's written notification of

its intention to (A) change the name in the CCR database; (B) comply with the requirements of Subpart 42.12 of the FAR; and (C) agree in writing to the timeline and procedures specified by the responsible Contracting Officer. The Contractor must provide with the notification sufficient documentation to support the legally changed name.

(ii) If the Contractor fails to comply with the requirements of paragraph (g)(1)(i) of this clause, or fails to perform the agreement at paragraph (g)(1)(i)(C) of this clause, and, in the absence of a properly executed novation or change-of name agreement, the CCR information that shows the Contractor to be other than the Contractor indicated in the contract will be considered to be incorrect information within the meaning of the "Suspension of Payment" paragraph of the electronic funds transfer (EFT) clause of this contract.

(2) The Contractor shall not change the name or address for EFT payments or manual payments, as appropriate, in the CCR record to reflect an assignee for the purpose of assignment of claims (see FAR Subpart 32.8, Assignment of Claims). Assignees shall be separately registered in the CCR database. Information provided to the Contractor's CCR record that indicates payments, including those made by EFT, to an ultimate recipient other than that Contractor will be considered to be incorrect information within the meaning of the "Suspension of payment" paragraph of the EFT clause of this contract.

(h) Offerors and Contractors may obtain information on registration and annual confirmation requirements via the internet at *http://www.ccr.gov* or by calling 1-888-227-2423, or 269-961-5757.
(End of clause)

14. DFARS 252.204-7003 CONTROL OF GOVERNMENT PERSONNEL WORK PRODUCT (APR 1992)

The Contractor's procedures for protecting against unauthorized disclosure of information shall not require Department of Defense employees or members of the Armed Forces to relinquish control of their work products, whether classified or not, to the Contractor.

15. DFARS 252.204-7004 ALTERNATE A (NOV 2003)

As prescribed in 204.1104, substitute the following paragraph (a) for paragraph (a) of the clause at FAR 52.204-7:

(a) *Definitions*. As used in this clause--

"Central Contractor Registration (CCR) database" means the primary Government repository for contractor information required for the conduct of business with the Government.

"Commercial and Government Entity (CAGE) code" means-

(1) A code assigned by the Defense Logistics Information Service (DLIS) to identify a commercial or Government entity; or

(2) A code assigned by a member of the North Atlantic Treaty Organization that DLIS records and maintains in the CAGE master file. This type of code is known as an "NCAGE code."

"Data Universal Numbering System (DUNS) number" means the 9-digit number assigned by Dun and Bradstreet, Inc. (D&B) to identify unique business entities.

"Data Universal Numbering System +4 (DUNS+4) number" means the DUNS number assigned by D&B plus a 4-character suffix that may be assigned by a business concern. (D&B has no affiliation with this 4-character suffix.) This 4-character suffix may be assigned at the discretion of the business concern to establish additional CCR records for identifying alternative Electronic Funds Transfer (EFT) accounts (see Subpart 32.11 of the Federal Acquisition Regulation) for the same parent concern.

"Registered in the CCR database" means that-

(1) The Contractor has entered all mandatory information, including the DUNS number or the

DUNS+4 number, into the CCR database;

(2) The Contractor's CAGE code is in the CCR database; and

(3) The Government has validated all mandatory data fields and has marked the records "Active."

16. *FAR 52.209-6 PROTECTING THE GOVERNMENTS INTEREST WHEN SUBCONTRACTING WITH CONTRACTORS DEBARRED, SUSPENDED, OR PROPOSED FOR DEBARMENT (JUL 1995)

(a) The Government suspends or debars Contractors to protect the Government's interests. The Contractor shall not enter into any subcontract in excess of $25,000 with a Contractor that is debarred, suspended, or proposed for debarment unless there is a compelling reason to do so.

(b) The Contractor shall require each proposed first-tier subcontractor, whose subcontract will exceed $25,000, to disclose to the Contractor, in writing, whether as of the time of award of the subcontract, the subcontractor, or its principals, is or is not debarred, suspended, or proposed for debarment by the Federal Government.

(c) A corporate office or a designee of the Contractor shall notify the Contracting Officer, in writing, before entering into a subcontract with a party that is debarred, suspended, or proposed for debarment (see FAR 9.404 for information on the List of Parties Excluded from Procurement Programs). The notice must include the following:

(1) The name of the subcontractor.

(2) The Contractor's knowledge of the reasons for the subcontractor being on the List of Parties Excluded from Procurement Programs.

(3) The compelling reason(s) for doing business with the subcontractor notwithstanding its inclusion on the List of Parties Excluded From Procurement Programs.

(4) The systems and procedures the Contractor has established to ensure that it is fully protecting the Government's interests when dealing with such subcontractor in view of the specific basis for the party's debarment, suspension, or proposed debarment.

17. DFARS 252.209-7004 SUBCONTRACTING WITH FIRMS THAT ARE OWNED OR CONTROLLED BY THE GOVERNMENT OF A TERRORIST COUNTRY (MAR 1998)

(a) Unless the Government determines that there is a compelling reason to do so, the Contractor shall not enter into any subcontract in excess of $25,000 with a firm, or a subsidiary of a firm, that is identified, on the List of Parties Excluded from Federal Procurement and Nonprocurement Programs, as being ineligible for the award of Defense contracts or subcontracts because it is owned or controlled by the government of a terrorist country.

(b) A corporate officer or a designee of the Contractor shall notify the Contracting Officer, in writing, before entering into a subcontract with a party that is identified, on the List of Parties Excluded from Federal Procurement and Nonprocurement Programs, as being ineligible for the award of Defense contracts or subcontracts because it is owned or controlled by the government of a terrorist country. The notice must include the name of the proposed subcontractor and the compelling reason(s) for doing business with the subcontractor notwithstanding its inclusion on the List of Parties Excluded From Federal Procurement and Nonprocurement Programs.

(End of clause)

18. *FAR 52.211-15 DEFENSE PRIORITY AND ALLOCATION REQUIREMENTS (SEP 1990) [<u>For Military Contract's Only</u>]

This is a rated order certified for national defense use, and the Contractor shall follow all the requirements of the Defense Priorities and Allocations System regulation (15 CFR 700).

19. FAR 52.211-18 VARIATION IN ESTIMATED QUANTITY (APR 1984)

If the quantity of a unit-priced item in this contract is an estimated quantity and the actual quantity of the unit-priced item varies more than 15 percent above or below the estimated quantity, an equitable adjustment in the contract price shall be made upon demand of either party. The equitable adjustment shall be based upon any increase or decrease in costs due solely to the variation above 115 percent or below 85 percent of the estimated quantity. If the quantity variation is such as to cause an increase in the time necessary for completion, the Contractor may request, in writing, an extension of time, to be received by the Contracting Officer within 10 days from the beginning of the delay, or within such further period as may be granted by the Contracting Officer before the date of final settlement of the contract. Upon the receipt of a written request for an extension, the Contracting Officer shall ascertain the facts and make an adjustment for extending the completion date as, in the judgement of the Contracting Officer, is justified.

20. *FAR 52.214-26 AUDIT AND RECORDS--SEALED BIDDING (OCT 1997)

(a) As used in this clause, "records" includes books, documents, accounting procedures and practices, and other data, regardless of whether such items are in written form, in the form of computer data, or in any other form.

(b) Cost or pricing data. If the Contractor has submitted cost or pricing data in connection with the pricing of any modification to this contract, the Contracting Officer or authorized representative of the Contracting Officer, in order to evaluate the accuracy, completeness, and currency of the cost or pricing data, shall have the right to examine and audit all of the Contractor's records, including computations and projections related to--

(1) The proposal for the modification;
(2) The discussions conducted on the proposal(s), including those related to negotiating;
(3) Pricing of the modification; or
(4 Performance of the modification.

(c) Comptroller General. In the case of pricing any modification, the Comptroller General of the United States, or an authorized representative, shall have the same rights as specified in paragraph (b) of this clause.

(d) Availability. The Contractor shall make available at its office at all reasonable times the materials described in paragraph (b) of this clause, for examination, audit, or reproduction, until 3 years after final payment under this contract, or for any other period specified in Subpart 4.7 of the Federal Acquisition Regulation (FAR). FAR Subpart 4.7, Contractor Records Retention, in effect on the date of this contract, is incorporated by reference in its entirety and made a part of this contract.

(1) If this contract is completely or partially terminated, the records relating to the work terminated shall be made available for 3 years after any resulting final termination settlement.

(2) Records pertaining to appeals under the Disputes clause or to litigation or the settlement of claims arising under or relating to the performance of this contract shall be made available until disposition of such appeals, litigation, or claims.

(e) The Contractor shall insert a clause containing all the provisions of this clause, including this paragraph (e), in all subcontracts expected to exceed the threshold in FAR 15.403-4(a)(1) for submission of cost or pricing data.

21. *FAR 52.214-27 PRICE REDUCTION FOR DEFECTIVE COST OR PRICING DATA—MODIFICATIONS--SEALED BIDDING (OCT 1997)

(a) This clause shall become operative only for any modification to this contract involving aggregate increases and/or decreases in costs, plus applicable profits, expected to exceed the threshold for submission of cost or pricing data at FAR 15.403-4(a)(1), except that this clause does not apply to any modification if an exception under FAR 15.403-1(b) applies.

(b) If any price, including profit, negotiated in connection with any modification under this clause, was increased by any significant amount because

(1) The Contractor or a subcontractor furnished cost or pricing data that were not complete, accurate, and current as certified in its Certificate of Current Cost or Pricing Data,

(2) a subcontractor or prospective subcontractor furnished the Contractor cost or pricing data that were not complete, accurate, and current as certified in the Contractor's Certificate of Current Cost or Pricing Data, or

(3) Any of these parties furnished data of any description that were not accurate, the price shall be reduced accordingly and the contract shall be modified to reflect the reduction. This right to a price reduction is limited to that resulting from defects in data relating to modifications for which this clause becomes operative under paragraph (a) of this clause.

(c) Any reduction in the contract price under paragraph (b) above due to defective data from a prospective subcontractor that was not subsequently awarded the subcontract shall be limited to the amount, plus applicable overhead and profit markup, by which

(1) the actual subcontract or

(2) the actual cost to the Contractor, if there was no subcontract, was less than the prospective subcontract cost estimate submitted by the Contractor; provided, that the actual subcontract price was not itself affected by defective cost or pricing data.

(d) (1) If the Contracting Officer determines under paragraph (b) of this clause that a price or cost reduction should be made, the Contractor agrees not to raise the following matters as a defense:

(i) The Contractor or subcontractor was a sole source supplier or otherwise was in a superior bargaining position and thus the price of the contract would not have been modified even if accurate, complete, and current cost or pricing data had been submitted.

(ii) The Contracting Officer should have known that the cost or pricing data in issue were defective even though the Contractor or subcontractor took no affirmative action to bring the character of the data to the attention of the Contracting Officer.

(iii) The contract was based on an agreement about the total cost of the contract and there was no agreement about the cost of each item procured under the contract.

(iv) The Contractor or subcontractor did not submit a Certificate of Current Cost or Pricing Data.

(2) (i) Except as prohibited by subdivision (d)(2)(ii) of this clause, an offset in an amount determined appropriate by the Contracting Officer based upon the facts shall be allowed against the amount of a contract price reduction if--

(A) The Contractor certifies to the Contracting Officer that, to the best of the Contractor's knowledge and belief, the Contractor is entitled to the offset in the amount requested; and

(B) The Contractor proves that the cost or pricing data were available before the date of agreement on the price of the contract (or price of the modification) and that the data were not submitted before such date.

(ii) An offset shall not be allowed if--

(A) The understated data was known by the Contractor to be understated when the Certificate of Current Cost or Pricing Data was signed; or

(B) The Government proves that the facts demonstrate that the contract price would not have increased in the amount to be offset even if the available data had been submitted before the date of agreement on price.

(e) If any reduction in the contract price under this clause reduces the price of items for which payment was made prior to the date of the modification reflecting the price reduction, the Contractor shall be liable to and shall pay the United States at the time such overpayment is repaid--

(1) Simple interest on the amount of such overpayment to be computed from the date(s) of overpayment to the Contractor to the date the Government is repaid by the Contractor at the applicable underpayment rate effective for each quarter prescribed by the Secretary of the Treasury under 26 U.S.C. 6621(a)(2); and

(2) A penalty equal to the amount of the overpayment, if the Contractor of subcontractor knowingly submitted cost or pricing data which were incomplete, inaccurate, or noncurrent.

22. *FAR 52.214-28 SUBCONTRACTOR COST OR PRICING DATA--MODIFICATIONS—SEALED BIDDING (OCT 1997)

(a) The requirements of paragraphs (b) and (c) of this clause shall--

(1) Become operative only for any modification to this contract involving aggregate increases and/or decreases in costs, plus applicable profits, expected to exceed the threshold for submission of cost or pricing data at FAR 15.403-4(a)(1); and

(2) Be limited to such modifications.

(b) Before awarding any subcontract expected to exceed the threshold for submission of cost or pricing data at FAR 15.403-4(a)(1), on the date of agreement on price or the date of award, whichever is later; or before pricing any subcontract modification involving aggregate increases and/or decreases in costs, plus applicable profits, expected to exceed the threshold for submission of cost or pricing data at FAR 15.403-4(a)(1), the Contractor shall require the subcontractor to submit cost or pricing data (actually or by specific identification in writing), unless an exception under FAR 15.403-1(b) applies.

(c) The Contractor shall require the subcontractor to certify in substantially the form prescribed in FAR subsection 15.406-2 that, to the best of its knowledge and belief, the data submitted under paragraph (b) above were accurate, complete, and current as of the date of agreement on the negotiated price of the subcontract or subcontract modification.

(d) The Contractor shall insert the substance of this clause, including this paragraph (d), in each subcontract that when entered into, exceeds the threshold for submission of cost or pricing data at FAR 15.403-4(a)(1).

(End of clause)

23. *FAR 52.219-4 NOTICE OF PRICE EVALUATION PREFERENCE FOR HUBZONE SMALL BUSINESS CONCERNS (JAN 1999)

(a) *Definition*. "HUBZone small business concern," as used in this clause, means a small business concern that appears on the List of Qualified HUBZone Small Business Concerns maintained by the Small Business Administration.

(b) *Evaluation preference*. (1) Offers will be evaluated by adding a factor of 10 percent to the price of all offers, except—

(i) Offers from HUBZone small business concerns that have not waived the evaluation preference;

(ii) Otherwise successful offers from small business concerns;

(iii) Otherwise successful offers of eligible products under the Trade Agreements Act when the dollar threshold for application of the Act is exceeded (see 25.402 of the Federal Acquisition Regulation (FAR)); and

(iv) Otherwise successful offers where application of the factor would be inconsistent with a Memorandum of Understanding or other international agreement with a foreign government.

(2) The factor of 10 percent shall be applied on a line item basis or to any group of items on which award may be made. Other evaluation factors described in the solicitation shall be applied before application of the factor.

(3) A concern that is both a HUBZone small business concern and a small disadvantaged business concern will receive the benefit of both the HUBZone small business price evaluation preference and the small disadvantaged business price evaluation adjustment (see FAR clause 52.219-23). Each applicable price evaluation preference or adjustment shall be calculated independently against an offeror's base offer. These individual preference amounts shall be added together to arrive at the total evaluated price for that offer.

(c) *Waiver of evaluation preference*. A HUBZone small business concern may elect to waive the evaluation preference, in which case the factor will be added to its offer for evaluation purposes. The agreements in paragraph

(d) of this clause do not apply if the offeror has waived the evaluation preference.

[ ] Offeror elects to waive the evaluation preference.

(d) *Agreement*. A HUBZone small business concern agrees that in the performance of the contract, in the case of a contract for—

(1) Services (except construction), at least 50 percent of the cost of personnel for contract performance will be spent for employees of the concern or employees of other HUBZone small business concerns;

(2) Supplies (other than procurement from a nonmanufacturer of such supplies), at least 50 percent of the cost of manufacturing, excluding the cost of materials, will be performed by the concern or other HUBZone small business concerns;

(3) General construction, at least 15 percent of the cost of the contract performance incurred for personnel will be will be spent on the concern's employees or the employees of other HUBZone small business concerns; or

(4) Construction by special trade contractors, at least 25 percent of the cost of the contract performance incurred for personnel will be spent on the concern's employees or the employees of other HUBZone small business concerns.

(e) A HUBZone joint venture agrees that in the performance of the contract, the applicable percentage specified in paragraph (d) of this clause will be performed by the HUBZone small business participant or participants.

(f) A HUBZone small business concern nonmanufacturer agrees to furnish in performing this contract only end items manufactured or produced by HUBZone small business manufacturer concerns. This paragraph does not apply in connection with construction or service contracts.

(End of clause)

24. *FAR 52.219-8 UTILIZATION OF SMALL BUSINESS CONCERNS (OCT 2000)

(a) It is the policy of the United States that small business concerns, veteran-owned small business concerns, service-disabled veteran-owned small business concerns, HUBZone small business concerns, small disadvantaged business concerns, and women-owned small business concerns shall have the maximum practicable opportunity to participate in performing contracts let by any Federal agency, including contracts and subcontracts for subsystems, assemblies, components, and related services for major systems. It is further the policy of the United States that its prime contractors establish procedures to ensure the timely payment of amounts due pursuant to the terms of their subcontracts with small business concerns, veteran-owned small business concerns, service-disabled veteran-owned small business concerns, HUBZone small business concerns, small disadvantaged business concerns, and women-owned small business concerns.

(b) The Contractor hereby agrees to carry out this policy in the awarding of subcontracts to the fullest extent consistent with efficient contract performance. The Contractor further agrees to cooperate in any studies or surveys as may be conducted by the United States Small Business Administration or the awarding agency of the United States as may be necessary to determine the extent of the Contractor ’s compliance with this clause.

(c) *Definitions*. As used in this contract—

“HUBZone small business concern” means a small business concern that appears on the List of Qualified HUBZone Small Business Concerns maintained by the Small Business Administration .

“Service-disabled veteran-owned small business concern ” —

(1) Means a small business concern—

(i) Not less than 51 percent of which is owned by one or more service-disabled veterans or, in the case of any publicly owned business, not less than 51 percent of the stock of which is owned by one or more service-disabled veterans; and

(ii) The management and daily business operations of which are controlled by one or more service-disabled veterans or, in the case of a veteran with permanent and severe disability, the spouse or permanent caregiver of such veteran.

(2) Service-disabled veteran means a veteran, as defined in 38 U.S.C. 101(2), with a disability that is service-connected, as defined in 38 U.S.C. 101(16).

“Small business concern” means a small business as defined pursuant to Section 3 of the Small Business Act and relevant regulations promulgated pursuant thereto.

"Small disadvantaged business concern" means a small business concern that represents, as part of its offer that—

(1) It has received certification as a small disadvantaged business concern consistent with 13 CFR part 124, Subpart B;

(2) No material change in disadvantaged ownership and control has occurred since its certification;

(3) Where the concern is owned by one or more individuals, the net worth of each individual upon whom the certification is based does not exceed $750,000 after taking into account the applicable exclusions set forth at 13 CFR 124.104(c)(2); and

(4) It is identified, on the date of its representation, as a certified small disadvantaged business in the database maintained by the Small Business Administration (PRO-Net).

"Veteran-owned small business concern" means a small business concern—

(1) Not less than 51 percent of which is owned by one or more veterans (as defined at 38 U.S.C. 101(2)) or, in the case of any publicly owned business, not less than 51 percent of the stock of which is owned by one or more veterans; and

(2) The management and daily business operations of which are controlled by one or more veterans.

"Women-owned small business concern" means a small business concern—

(1) That is at least 51 percent owned by one or more women, or, in the case of any publicly owned business, at least 51 percent of the stock of which is owned by one or more women; and

(2) Whose management and daily business operations are controlled by one or more women.

(d) Contractors acting in good faith may rely on written representations by their subcontractors regarding their status as a small business concern, a veteran-owned small business concern, a service-disabled veteran-owned small business concern, a HUBZone small business concern, a small disadvantaged business concern, or a women-owned small business concern.

(End of clause)

25. *FAR 52.219-9 SMALL BUSINESS SUBCONTRACTING PLAN (JAN 2002) [When Contracting By Negotiations]

(a) This clause does not apply to small business concerns.

(b) *Definitions*. As used in this clause—

"Commercial item" means a product or service that satisfies the definition of commercial item in section 2.101 of the Federal Acquisition Regulation.

"Commercial plan" means a subcontracting plan (including goals) that covers the offeror's fiscal year and that applies to the entire production of commercial items sold by either the entire company or a portion thereof (*e.g.*, division, plant, or product line).

"Individual contract plan" means a subcontracting plan that covers the entire contract period (including option periods), applies to a specific contract, and has goals that are based on the offeror's planned subcontracting in support of the specific contract, except that indirect costs incurred for common or joint purposes may be allocated on a prorated basis to the contract.

"Master plan" means a subcontracting plan that contains all the required elements of an individual contract plan, except goals, and may be incorporated into individual contract plans, provided the master plan has been approved.

"Subcontract" means any agreement (other than one involving an employer-employee relationship) entered into by a Federal Government prime Contractor or subcontractor calling for supplies or services required for performance of the contract or subcontract.

(c) The offeror, upon request by the Contracting Officer, shall submit and negotiate a subcontracting plan, where applicable, that separately addresses subcontracting with small business, veteran-owned small business, service-disabled veteran-owned small business, HUBZone small business concerns, small disadvantaged business, and women-owned small business concerns. If the offeror is submitting an individual contract plan, the plan must separately address subcontracting with small business, veteran-owned small business, service-disabled veteran-owned small business, HUBZone small business, small disadvantaged business, and women-owned small business

concerns, with a separate part for the basic contract and separate parts for each option (if any). The plan shall be included in and made a part of the resultant contract. The subcontracting plan shall be negotiated within the time specified by the Contracting Officer. Failure to submit and negotiate the subcontracting plan shall make the offeror ineligible for award of a contract.

(d) The offeror's subcontracting plan shall include the following:

(1) Goals, expressed in terms of percentages of total planned subcontracting dollars, for the use of small business, veteran-owned small business, service-disabled veteran-owned small business, HUBZone small business, small disadvantaged business, and women-owned small business concerns as subcontractors. The offeror shall include all subcontracts that contribute to contract performance, and may include a proportionate share of products and services that are normally allocated as indirect costs.

(2) A statement of—

(i) Total dollars planned to be subcontracted for an individual contract plan; or the offeror's total projected sales, expressed in dollars, and the total value of projected subcontracts to support the sales for a commercial plan;

(ii) Total dollars planned to be subcontracted to small business concerns;

(iii) Total dollars planned to be subcontracted to veteran-owned small business concerns;

(iv) Total dollars planned to be subcontracted to service-disabled veteran-owned small business;

(v) Total dollars planned to be subcontracted to HUBZone small business concerns;

(vi) Total dollars planned to be subcontracted to small disadvantaged business concerns; and

(vii) Total dollars planned to be subcontracted to women-owned small business concerns.

(3) A description of the principal types of supplies and services to be subcontracted, and an identification of the types planned for subcontracting to—

(i) Small business concerns;

(ii) Veteran-owned small business concerns;

(iii) Service-disabled veteran-owned small business concerns;

(iv) HUBZone small business concerns;

(v) Small disadvantaged business concerns; and

(vi) Women-owned small business concerns.

(4) A description of the method used to develop the subcontracting goals in paragraph (d)(1) of this clause.

(5) A description of the method used to identify potential sources for solicitation purposes (*e.g.*, existing company source lists, the Procurement Marketing and Access Network (PRO-Net) of the Small Business Administration (SBA), veterans service organizations, the National Minority Purchasing Council Vendor Information Service, the Research and Information Division of the Minority Business Development Agency in the Department of Commerce, or small, HUBZone, small disadvantaged, and women-owned small business trade associations). A firm may rely on the information contained in PRO-Net as an accurate representation of a concern's size and ownership characteristics for the purposes of maintaining a small, veteran-owned small, service-disabled veteran-owned small, HUBZone small, small disadvantaged, and women-owned small business source list. Use of PRONet as its source list does not relieve a firm of its responsibilities (*e.g.*, outreach, assistance, counseling, or publicizing subcontracting opportunities) in this clause.

(6) A statement as to whether or not the offeror included indirect costs in establishing subcontracting goals, and a description of the method used to determine the proportionate share of indirect costs to be incurred with—

(i) Small business concerns;

(ii) Veteran-owned small business concerns;

(iii) Service-disabled veteran-owned small business concerns;

(iv) HUBZone small business concerns;

(v) Small disadvantaged business concerns; and

(vi) Women-owned small business concerns.

(7) The name of the individual employed by the offeror who will administer the offeror's subcontracting program, and a description of the duties of the individual.

(8) A description of the efforts the offeror will make to assure that small business, veteran-owned

small business, service-disabled veteran-owned small business, HUBZone small business, small disadvantaged business, and women-owned small business concerns have an equitable opportunity to compete for subcontracts.

(9) Assurances that the offeror will include the clause of this contract entitled "Utilization of Small Business Concerns" in all subcontracts that offer further subcontracting opportunities, and that the offeror will require all subcontractors (except small business concerns) that receive subcontracts in excess of $500,000 ($1,000,000 for construction of any public facility) to adopt a subcontracting plan that complies with the requirements of this clause.

(10) Assurances that the offeror will—

(i) Cooperate in any studies or surveys as may be required;

(ii) Submit periodic reports so that the Government can determine the extent of compliance by the offeror with the subcontracting plan;

(iii) Submit Standard Form (SF) 294, Subcontracting Report for Individual Contracts, and/or SF 295, Summary Subcontract Report, in accordance with paragraph (j) of this clause. The reports shall provide information on subcontract awards to small business concerns, veteran-owned small business concerns, service-disabled veteran-owned small business concerns, HUBZone small business concerns, small disadvantaged business concerns, women-owned small business concerns, and Historically Black Colleges and Universities and Minority Institutions. Reporting shall be in accordance with the instructions on the forms or as provided in agency regulations.

(iv) Ensure that its subcontractors agree to submit SF 294 and SF 295.

(11) A description of the types of records that will be maintained concerning procedures that have been adopted to comply with the requirements and goals in the plan, including establishing source lists; and a description of the offeror's efforts to locate small business, veteran-owned small business, service-disabled veteran-owned small business, HUBZone small business, small disadvantaged business, and women-owned small business concerns and award subcontracts to them. The records shall include at least the following (on a plant-wide or company-wide basis, unless otherwise indicated):

(i) Source lists (*e.g.*, PRO-Net), guides, and other data that identify small business, veteran-owned small business, service-disabled veteran-owned small business, HUBZone small business, small disadvantaged business, and women-owned small business concerns.

(ii) Organizations contacted in an attempt to locate sources that are small business, veteran-owned small business, service-disabled veteran-owned small business, HUBZone small business, small disadvantaged business, or women-owned small business concerns.

(iii) Records on each subcontract solicitation resulting in an award of more than $100,000, indicating—

(A) Whether small business concerns were solicited and, if not, why not;

(B) Whether veteran-owned small business concerns were solicited and, if not, why not;

(C) Whether service-disabled veteran-owned small business concerns were solicited and, if not, why not;

(D) Whether HUBZone small business concerns were solicited and, if not, why not;

(E) Whether small disadvantaged business concerns were solicited and, if not, why not;

(F) Whether women-owned small business concerns were solicited and, if not, why not; and

(G) If applicable, the reason award was not made to a small business concern.

(iv) Records of any outreach efforts to contact—

(A) Trade associations;

(B) Business development organizations;

(C) Conferences and trade fairs to locate small, HUBZone small, small disadvantaged, and women-owned small business sources; and

(D) Veterans service organizations.

(v) Records of internal guidance and encouragement provided to buyers through—

(A) Workshops, seminars, training, etc.; and

(B) Monitoring performance to evaluate compliance with the program's

requirements.

(vi) On a contract-by-contract basis, records to support award data submitted by the offeror to the Government, including the name, address, and business size of each subcontractor. Contractors having commercial plans need not comply with this requirement.

(e) In order to effectively implement this plan to the extent consistent with efficient contract performance, the Contractor shall perform the following functions:

(1) Assist small business, veteran-owned small business, service-disabled veteran-owned small business, HUBZone small business, small disadvantaged business, and women-owned small business concerns by arranging solicitations, time for the preparation of bids, quantities, specifications, and delivery schedules so as to facilitate the participation by such concerns. Where the Contractor's lists of potential small business, veteran-owned small business, service-disabled veteran-owned small business, HUBZone small business, small disadvantaged business, and women-owned small business subcontractors are excessively long, reasonable effort shall be made to give all such small business concerns an opportunity to compete over a period of time.

(2) Provide adequate and timely consideration of the potentialities of small business, veteran-owned small business, service-disabled veteran-owned small business, HUBZone small business, small disadvantaged business, and women-owned small business concerns in all "make-or-buy" decisions.

(3) Counsel and discuss subcontracting opportunities with representatives of small business, veteran-owned small business, service-disabled veteran-owned small business , HUBZone small business, small disadvantaged business, and women-owned small business firms.

(4) Provide notice to subcontractors concerning penalties and remedies for misrepresentations of business status as small, veteran-owned small business, HUBZone small, small disadvantaged, or women-owned small business for the purpose of obtaining a subcontract that is to be included as part or all of a goal contained in the Contractor's subcontracting plan.

(f) A master plan on a plant or division-wide basis that contains all the elements required by paragraph (d) of this clause, except goals, may be incorporated by reference as a part of the subcontracting plan required of the offeror by this clause; provided —

(1) The master plan has been approved;

(2) The offeror ensures that the master plan is updated as necessary and provides copies of the approved master plan, including evidence of its approval, to the Contracting Officer; and

(3) Goals and any deviations from the master plan deemed necessary by the Contracting Officer to satisfy the requirements of this contract are set forth in the individual subcontracting plan.

(g) A commercial plan is the preferred type of subcontracting plan for contractors furnishing commercial items. The commercial plan shall relate to the offeror's planned subcontracting generally, for both commercial and Government business, rather than solely to the Government contract. Commercial plans are also preferred for subcontractors that provide commercial items under a prime contract, whether or not the prime contractor is supplying a commercial item.

(h) Prior compliance of the offeror with other such subcontracting plans under previous contracts will be considered by the Contracting Officer in determining the responsibility of the offeror for award of the contract.

(i) The failure of the Contractor or subcontractor to comply in good faith with—

(1) The clause of this contract entitled "Utilization Of Small Business Concerns;" or

(2) An approved plan required by this clause, shall be a material breach of the contract.

(j) The Contractor shall submit the following reports:

(1) *Standard Form 294, Subcontracting Report for Individual Contracts.* This report shall be submitted to the Contracting Officer semiannually and at contract completion. The report covers subcontract award data related to this contract. This report is not required for commercial plans.

(2) *Standard Form 295, Summary Subcontract Report.* This report encompasses all of the contracts with the awarding agency. It must be submitted semi-annually for contracts with the Department of Defense and annually for contracts with civilian agencies. If the reporting activity is covered by a commercial plan, the reporting activity must report annually all subcontract awards under that plan. All reports submitted at the close of each fiscal year (both individual and commercial plans) shall include a breakout, in the Contractor's format, of subcontract awards, in whole dollars, to small disadvantaged business concerns by North American Industry Classification System (NAICS) Industry Subsector. For a commercial plan, the Contractor may obtain from each of its subcontractors a predominant NAICS Industry Subsector and report all awards to that subcontractor under its predominant NAICS Industry Subsector.

(End of clause)

26. *FAR 52.219-9 SMALL BUSINESS SUBCONTRACTING PLAN (JAN 2002) --ALTERNATE I (OCT 2001) [When Contracting By Sealed Bidding]

(a) This clause does not apply to small business concerns.

(b) *Definitions*. As used in this clause—

"Commercial item" means a product or service that satisfies the definition of commercial item in section 2.101 of the Federal Acquisition Regulation.

"Commercial plan" means a subcontracting plan (including goals) that covers the offeror's fiscal year and that applies to the entire production of commercial items sold by either the entire company or a portion thereof (*e.g.*, division, plant, or product line).

"Individual contract plan" means a subcontracting plan that covers the entire contract period (including option periods), applies to a specific contract, and has goals that are based on the offeror's planned subcontracting in support of the specific contract, except that indirect costs incurred for common or joint purposes may be allocated on a prorated basis to the contract.

"Master plan" means a subcontracting plan that contains all the required elements of an individual contract plan, except goals, and may be incorporated into individual contract plans, provided the master plan has been approved.

"Subcontract" means any agreement (other than one involving an employer-employee relationship) entered into by a Federal Government prime Contractor or subcontractor calling for supplies or services required for performance of the contract or subcontract.

(c) The apparent low bidder, upon request by the Contracting Officer, shall submit a subcontracting plan, where applicable, that separately addresses subcontracting with small business, veteran-owned small business, service-disabled veteran-owned small business, HUBZone small business, small disadvantaged business, and women-owned small business concerns. If the bidder is submitting an individual contract plan, the plan must separately address subcontracting with small business, veteran-owned small business, service-disabled veteran-owned small business, HUBZone small business, small disadvantaged business, and women-owned small business concerns, with a separate part for the basic contract and separate parts for each option (if any). The plan shall be included in and made a part of the resultant contract. The subcontracting plan shall be submitted within the time specified by the Contracting Officer. Failure to submit the subcontracting plan shall make the bidder ineligible for the award of a contract.

(d) The offeror's subcontracting plan shall include the following:

(1) Goals, expressed in terms of percentages of total planned subcontracting dollars, for the use of small business, veteran-owned small business, service-disabled veteran-owned small business, HUBZone small business, small disadvantaged business, and women-owned small business concerns as subcontractors. The offeror shall include all subcontracts that contribute to contract performance, and may include a proportionate share of products and services that are normally allocated as indirect costs.

(2) A statement of—

(i) Total dollars planned to be subcontracted for an individual contract plan; or the offeror's total projected sales, expressed in dollars, and the total value of projected subcontracts to support the sales for a commercial plan;

(ii) Total dollars planned to be subcontracted to small business concerns;

(iii) Total dollars planned to be subcontracted to veteran-owned small business concerns;

(iv) Total dollars planned to be subcontracted to service-disabled veteran-owned small business;

(v) Total dollars planned to be subcontracted to HUBZone small business concerns;

(vi) Total dollars planned to be subcontracted to small disadvantaged business concerns; and

(vii) Total dollars planned to be subcontracted to women-owned small business concerns.

(3) A description of the principal types of supplies and services to be subcontracted, and an identification of the types planned for subcontracting to—

(i) Small business concerns;

(ii) Veteran-owned small business concerns;

(iii) Service-disabled veteran-owned small business concerns;
(iv) HUBZone small business concerns;
(v) Small disadvantaged business concerns; and
(vi) Women-owned small business concerns.

(4) A description of the method used to develop the subcontracting goals in paragraph (d)(1) of this clause.

(5) A description of the method used to identify potential sources for solicitation purposes (*e.g.*, existing company source lists, the Procurement Marketing and Access Network (PRO-Net) of the Small Business Administration (SBA), veterans service organizations, the National Minority Purchasing Council Vendor Information Service, the Research and Information Division of the Minority Business Development Agency in the Department of Commerce, or small, HUBZone, small disadvantaged, and women-owned small business trade associations). A firm may rely on the information contained in PRO-Net as an accurate representation of a concern's size and ownership characteristics for the purposes of maintaining a small, veteran-owned small, service-disabled veteran-owned small, HUBZone small, small disadvantaged, and women-owned small business source list. Use of PRONet as its source list does not relieve a firm of its responsibilities (*e.g.*, outreach, assistance, counseling, or publicizing subcontracting opportunities) in this clause.

(6) A statement as to whether or not the offeror included indirect costs in establishing subcontracting goals, and a description of the method used to determine the proportionate share of indirect costs to be incurred with—

(i) Small business concerns;
(ii) Veteran-owned small business concerns;
(iii) Service-disabled veteran-owned small business concerns;
(iv) HUBZone small business concerns;
(v) Small disadvantaged business concerns; and
(vi) Women-owned small business concerns.

(7) The name of the individual employed by the offeror who will administer the offeror's subcontracting program, and a description of the duties of the individual.

(8) A description of the efforts the offeror will make to assure that small business, veteran-owned small business, service-disabled veteran-owned small business, HUBZone small business, small disadvantaged business, and women-owned small business concerns have an equitable opportunity to compete for subcontracts.

(9) Assurances that the offeror will include the clause of this contract entitled "Utilization of Small Business Concerns" in all subcontracts that offer further subcontracting opportunities, and that the offeror will require all subcontractors (except small business concerns) that receive subcontracts in excess of $500,000 ($1,000,000 for construction of any public facility) to adopt a subcontracting plan that complies with the requirements of this clause.

(10) Assurances that the offeror will—

(i) Cooperate in any studies or surveys as may be required;

(ii) Submit periodic reports so that the Government can determine the extent of compliance by the offeror with the subcontracting plan;

(iii) Submit Standard Form (SF) 294, Subcontracting Report for Individual Contracts, and/or SF 295, Summary Subcontract Report, in accordance with paragraph (j) of this clause. The reports shall provide information on subcontract awards to small business concerns, veteran-owned small business concerns, service-disabled veteran-owned small business concerns, HUBZone small business concerns, small disadvantaged business concerns, women-owned small business concerns, and Historically Black Colleges and Universities and Minority Institutions. Reporting shall be in accordance with the instructions on the forms or as provided in agency regulations.

(iv) Ensure that its subcontractors agree to submit SF 294 and SF 295.

(11) A description of the types of records that will be maintained concerning procedures that have been adopted to comply with the requirements and goals in the plan, including establishing source lists; and a description of the offeror's efforts to locate small business, veteran-owned small business, service-disabled veteran-owned small business, HUBZone small business, small disadvantaged business, and women-owned small business concerns and award subcontracts to them. The records shall include at least the following (on a plant-wide or company-wide basis, unless otherwise indicated):

(i) Source lists (*e.g.*, PRO-Net), guides, and other data that identify small business,

veteran-owned small business, service-disabled veteran-owned small business, HUBZone small business, small disadvantaged business, and women-owned small business concerns.

(ii) Organizations contacted in an attempt to locate sources that are small business, veteran-owned small business, service-disabled veteran-owned small business, HUBZone small business, small disadvantaged business, or women-owned small business concerns.

(iii) Records on each subcontract solicitation resulting in an award of more than $100,000, indicating—

(A) Whether small business concerns were solicited and, if not, why not;

(B) Whether veteran-owned small business concerns were solicited and, if not, why not;

(C) Whether service-disabled veteran-owned small business concerns were solicited and, if not, why not;

(D) Whether HUBZone small business concerns were solicited and, if not, why not;

(E) Whether small disadvantaged business concerns were solicited and, if not, why not;

(F) Whether women-owned small business concerns were solicited and, if not, why not; and

(G) If applicable, the reason award was not made to a small business concern.

(iv) Records of any outreach efforts to contact—

(A) Trade associations;

(B) Business development organizations;

(C) Conferences and trade fairs to locate small, HUBZone small, small disadvantaged, and women-owned small business sources; and

(D) Veterans service organizations.

(v) Records of internal guidance and encouragement provided to buyers through—

(A) Workshops, seminars, training, etc.; and

(B) Monitoring performance to evaluate compliance with the program's requirements.

(vi) On a contract-by-contract basis, records to support award data submitted by the offeror to the Government, including the name, address, and business size of each subcontractor. Contractors having commercial plans need not comply with this requirement.

(e) In order to effectively implement this plan to the extent consistent with efficient contract performance, the Contractor shall perform the following functions:

(1) Assist small business, veteran-owned small business, service-disabled veteran-owned small business, HUBZone small business, small disadvantaged business, and women-owned small business concerns by arranging solicitations, time for the preparation of bids, quantities, specifications, and delivery schedules so as to facilitate the participation by such concerns. Where the Contractor's lists of potential small business, veteran-owned small business, service-disabled veteran-owned small business, HUBZone small business, small disadvantaged business, and women-owned small business subcontractors are excessively long, reasonable effort shall be made to give all such small business concerns an opportunity to compete over a period of time.

(2) Provide adequate and timely consideration of the potentialities of small business, veteran-owned small business, service-disabled veteran-owned small business, HUBZone small business, small disadvantaged business, and women-owned small business concerns in all "make-or-buy" decisions.

(3) Counsel and discuss subcontracting opportunities with representatives of small business, veteran-owned small business, service-disabled veteran-owned small business , HUBZone small business, small disadvantaged business, and women-owned small business firms.

(4) Provide notice to subcontractors concerning penalties and remedies for misrepresentations of business status as small, veteran-owned small business, HUBZone small, small disadvantaged, or women-owned small business for the purpose of obtaining a subcontract that is to be included as part or all of a goal contained in the Contractor's subcontracting plan.

(f) A master plan on a plant or division-wide basis that contains all the elements required by paragraph (d) of this clause, except goals, may be incorporated by reference as a part of the subcontracting plan required of the offeror by this clause; provided —

(1) The master plan has been approved;

(2) The offeror ensures that the master plan is updated as necessary and provides copies of the approved master plan, including evidence of its approval, to the Contracting Officer; and

(3) Goals and any deviations from the master plan deemed necessary by the Contracting Officer to satisfy the requirements of this contract are set forth in the individual subcontracting plan.

(g) A commercial plan is the preferred type of subcontracting plan for contractors furnishing commercial items. The commercial plan shall relate to the offeror's planned subcontracting generally, for both commercial and Government business, rather than solely to the Government contract. Commercial plans are also preferred for subcontractors that provide commercial items under a prime contract, whether or not the prime contractor is supplying a commercial item.

(h) Prior compliance of the offeror with other such subcontracting plans under previous contracts will be considered by the Contracting Officer in determining the responsibility of the offeror for award of the contract.

(i) The failure of the Contractor or subcontractor to comply in good faith with—

(1) The clause of this contract entitled "Utilization Of Small Business Concerns;" or

(2) An approved plan required by this clause, shall be a material breach of the contract.

(j) The Contractor shall submit the following reports:

(1) *Standard Form 294, Subcontracting Report for Individual Contracts.* This report shall be submitted to the Contracting Officer semiannually and at contract completion. The report covers subcontract award data related to this contract. This report is not required for commercial plans.

(2) *Standard Form 295, Summary Subcontract Report.* This report encompasses all of the contracts with the awarding agency. It must be submitted semi-annually for contracts with the Department of Defense and annually for contracts with civilian agencies. If the reporting activity is covered by a commercial plan, the reporting activity must report annually all subcontract awards under that plan. All reports submitted at the close of each fiscal year (both individual and commercial plans) shall include a breakout, in the Contractor's format, of subcontract awards, in whole dollars, to small disadvantaged business concerns by North American Industry Classification System (NAICS) Industry Subsector. For a commercial plan, the Contractor may obtain from each of its subcontractors a predominant NAICS Industry Subsector and report all awards to that subcontractor under its predominant NAICS Industry Subsector.

(End of clause)

27. DFARS 252.219-7009 SECTION 8(a) DIRECT AWARD (MAR 2002) [<u>When Competitive 8(a) Contracting Procedures are used</u>]

(a) This contract is issued as a direct award between the contracting office and the 8(a) Contractor pursuant to the Partnership Agreement dated February 1, 2002, between the Small Business Administration (SBA) and the Department of Defense. Accordingly, the SBA, even if not identified in Section A of this contract, is the prime contractor and retains responsibility for 8(a) certification, for 8(a) eligibility determinations and related issues, and for providing counseling and assistance to the 8(a) Contractor under the 8(a) Program. The cognizant SBA district office is:

[To be completed by the Contracting Officer at the time of award]

(b) The contracting office is responsible for administering the contract and for taking any action on behalf of the Government under the terms and conditions of the contract; provided that the contracting office shall give advance notice to the SBA before it issues a final notice terminating performance, either in whole or in part, under

the contract. The contracting office also shall coordinate with the SBA prior to processing any novation agreement. The contracting office may assign contract administration functions to a contract administration office.

(c) The 8(a) Contractor agrees that--

(1) It will notify the Contracting Officer, simultaneous with its notification to the SBA (as required by SBA's 8(a) regulations at 13 CFR 124.308), when the owner or owners upon whom 8(a) eligibility is based plan to relinquish ownership or control of the concern. Consistent with Section 407 of Pub. L. 100-656, transfer of ownership or control shall result in termination of the contract for convenience, unless the SBA waives the requirement for termination prior to the actual relinquishing of ownership and control; and

(2) It will not subcontract the performance of any of the requirements of this contract without the prior written approval of the SBA and the Contracting Officer.

(End of clause)

28. *FAR 52.219-14 LIMITATIONS ON SUBCONTRACTING (DEC 1996) [<u>For Small Business Set Aside Only</u>]

(a) This clause does not apply to the unrestricted portion of a partial set-aside.

(b) By submission of an offer and execution of a contract, the Offeror/Contractor agrees that in performance of the contract in the case of a contract for--

(1) Services (except construction). At least 50 percent of the cost of contract performance incurred for personnel shall be expended for employees of the concern.

(2) Supplies (other than procurement from a nonmanufacturer of such supplies). The concern shall perform work for at least 50 percent of the cost of manufacturing the supplies, not including the cost of materials.

(3) General construction. The concern will perform at least 15 percent of the cost of the contract, not including the cost of materials, with its own employees.

(4) Construction by special trade contractors. The concern will perform at lest 25 percent of the cost of the contract, not including the cost of materials, with its own employees.

29. *FAR 52.219-16 LIQUIDATED DAMAGES-SUBCONTRACTING PLAN (JAN 1999)

(a) Failure to make a good faith effort to comply with the subcontracting plan, as used in this clause, means a willful or intentional failure to perform in accordance with the requirements of the subcontracting plan approved under the clause in this contract entitled ``Small Business Subcontracting Plan," or willful or intentional action to frustrate the plan.

(b) Performance shall be measured by applying the percentage goals to the total actual subcontracting dollars or, if a commercial plan is involved, to the pro rata share of actual subcontracting dollars attributable to Government contracts covered by the commercial plan., If, at contract completion, or in the case of a commercial plan, at the close of the fiscal year for which the plan is applicable, the Contractor has failed to meet its subcontracting goals and the Contracting Officer decides in accordance with paragraph (c) of this clause that the Contractor failed to make a good faith effort to comply with its subcontracting plan, established in accordance with the clause in this contract entitled ``Small Business Subcontracting Plan," the Contractor shall pay the Government liquidated damages in an amount stated. The amount of probable damages attributable to the Contractor's failure to comply shall be an amount equal to the actual dollar amount by which the Contractor failed to achieve each subcontract goal.

(c) Before the Contracting Officer makes a final decision that the Contractor has failed to make such good faith effort, the Contracting Officer shall give the Contractor written notice specifying the failure and permitting the Contractor to demonstrate what good faith efforts have been made and to discuss the matter. Failure

to respond to the notice may be taken as an admission that no valid explanation exists. If, after consideration of all the pertinent data, the Contracting Officer finds that the Contractor failed to make a good faith effort to comply with the subcontracting plan, the Contracting Officer shall issue a final decision to that effect and require that the Contractor pay the Government liquidated damages as provided in paragraph (b) of this clause.

(d) With respect to commercial plans, the Contracting Officer who approved the plan will perform the functions of the Contracting Officer under this clause on behalf of all agencies with contracts covered by a commercial plan.

(e) The Contractor shall have the right of appeal, under the clause in this contract entitled, Disputes, from many final decision of the Contracting Officer.

(f) Liquidated damages shall be in addition to any other remedies that the Government may have.

30. DFARS 252.219-7010 ALTERNATE A (JUN 1998) [When Competitive 8(a) Contracting Procedures are used]

As prescribed in 219.811-3(2), substitute the following paragraph (c) for paragraph (c) of the clause at FAR 52.219-18:

(c) Any award resulting from this solicitation will be made directly by the Contracting Officer to the successful 8(a) offeror selected through the evaluation criteria set forth in this solicitation.

31. FAR 52.219-18 NOTIFICATION OF COMPETITION LIMITED TO ELIGIBLE 8(A) CONCERNS (JUNE 2003) [When Competitive 8(a) Contracting Procedures are used]

(a) Offers are solicited only from small business concerns expressly certified by the Small Business Administration (SBA) for participation in the SBA's 8(a) Program and which meet the following criteria at the time of submission of offer--

(1) The Offeror is in conformance with the 8(a) support limitation set forth in its approved business plan; and

(2) The Offeror is in conformance with the Business Activity Targets set forth in its approved business plan or any remedial action directed by the SBA.

(b) By submission of its offer, the Offeror represents that it meets all of the criteria set forth in paragraph (a) of this clause.

(c) Any award resulting from this solicitation will be made to the Small Business Administration, which will subcontract performance to the successful 8(a) offeror selected through the evaluation criteria set forth in this solicitation.

(d) (1) Agreement. A small business concern submitting an offer in its own name agrees to furnish, in performing the contract, only end items manufactured or produced by small business concerns in the United States or its outlying areas. If this procurement is processed under simplified acquisition procedures and the total amount of this contract does not exceed $25,000, a small business concern may furnish the product of any domestic firm. This subparagraph does not apply in connection with construction or service contracts.

(2) The . . . . . [insert name of SBA's contractor] will notify the U.S. Army Corps of Engineers Contracting Officer in writing immediately upon entering an agreement (either oral or written) to transfer all or part of its stock or other ownership interest to any other party.

(End of clause)

32. DFARS 252.219-7003 SMALL, SMALL DISADVANTAGED AND WOMEN-OWNED SMALL BUSINESS SUBCONTRACTING PLAN (DOD CONTRACTS) (APR 1996)

This clause supplements the Federal Acquisition Regulation 52.219-9, Small, Small Disadvantaged and Women-Owned Small Business Subcontracting Plan, clause of this contract.

(a) Definitions.

"Historically black colleges and universities," as used in this clause, means institutions determined by the Secretary of Education to meet the requirements of 34 CFR Section 608.2. The term also means any nonprofit research institution that was an integral part of such a college or university before November 14, 1986.

"Minority institutions," as used in this clause, means institutions meeting the requirements of Section 1046(3) of the Higher Education Act of 1965 (20 U.S.C. 1135d-5(3)). The term also includes Hispanic-serving institutions as defined in Section 316(b)(1) of such Act (20 U.S.C. 1059c(b)(1).

(b) Except for company or division-wide commercial products subcontracting plans, the term "small disadvantaged business," when used in the FAR 52.219-9 clause, includes historically black colleges and universities and minority institutions in addition to small disadvantaged business concerns.

(c) Work under the contract or its subcontracts shall be credited toward meeting the small disadvantaged business concern goal required by paragraph (d) of the FAR 52.219-9 clause when:

(1) It is performed on Indian lands or in joint venture with an Indian tribe or a tribally-owned corporation, and

(2) It meets the requirements of 10 U.S.C. 2323a.

(d) Subcontracts awarded to workshops approved by the Committee for Purchase from People Who are Blind or Severely Disabled (41 U.S.C. 46-48), may be counted toward the Contractor's small business subcontracting goal.

(e) A mentor firm, under the Pilot Mentor-Protege Program established under Section 831 of Pub. L. 101-510, as amended, may count toward its small disadvantaged business goal, subcontracts awarded--

(1) Protege firms which are qualified organizations employing the severely handicapped; and

(2) Former protege firms that meet the criteria in Section 831(g)(4) of Pub. L. 101-510.

(f) The master plan approval referred to in paragraph (f) of the FAR 52.219-9 clause is approval by the Contractor's cognizant contract administration activity.

(g) In those subcontracting plans which specifically identify small, small disadvantaged, and women-owned businesses, the Contractor shall notify the Administrative Contracting Officer of any substitutions of firms that are not small, small disadvantaged, or women-owned small businesses for the firms listed in the subcontracting plan. Notifications shall be in writing and shall occur within a reasonable period of time after award of the subcontract. Contractor-specified formats shall be acceptable.

33. DFARS 252.219-7004 SMALL, SMALL DISADVANTAGED AND WOMEN-OWNED SMALL BUSINESS SUBCONTRACTING PLAN (TEST PROGRAM) (JUN 1997)

(a) Definition. "Subcontract," as used in this clause, means any agreement (other than one involving an employer-employee relationship) entered into by a Federal Government prime Contractor or subcontractor calling for supplies or services required for performance of the contract or subcontract.

(b) The Offeror's comprehensive small business subcontracting plan and its successors, which are authorized by and approved under the test program of Section 834 of Pub. L. 101-189, shall be included in and made a part of the resultant contract. Upon expulsion from the test program or expiration of the test program, the Contractor shall negotiate an individual subcontracting plan for all future contracts that meet the requirements of Section 211 of Publ. L. 95-507.

(c) The Contractor shall submit Standard Form 295, Summary Subcontract Report, in accordance with the instructions on the form, except--

(1) One copy of SF 295 and attachments shall be submitted to Director, Small and Disadvantaged Business Utilization, Office of the Deputy Under Secretary of Defense (International and Commercial Programs), 3061 Defense Pentagon, Room 2A338, Washington, DC 20301-3061; and

(2) Item 14, Remarks, shall be completed to include semi-annual cumulative--

(1) Small business, small disadvantaged business and women-owned small business goals; and

(2) Small business and small disadvantaged business goals, actual accomplishments, and percentages for each of the two designated industry categories.

(d) The failure of the Contractor or subcontractor to comply in good faith with (1) the clause of this contract entitled "Utilization of Small, Small Disadvantaged and Women-Owned Small Business Concerns," or (2) an approved plan required by this clause, shall be a material breach of the contract.

34. *FAR 52.222-3 CONVICT LABOR (JUNE 2003)

(a) Except as provided in paragraph (b) of this clause, the Contractor shall not employ in the performance of this contract any person undergoing a sentence of imprisonment imposed by any court of a State, the District of Columbia, Puerto Rico, the Northern Mariana Islands, American Samoa,
Guam, or the U.S. Virgin Islands.

(b) The Contractor is not prohibited from employing persons—

(1) On parole or probation to work at paid employment during the term of their sentence;

(2) Who have been pardoned or who have served their terms; or

(3) Confined for violation of the laws of any of the States, the District of Columbia, Puerto Rico, the Northern Mariana Islands, American Samoa, Guam, or the U.S. Virgin Islands who are authorized to work at paid employment in the community under the laws of such jurisdiction, if—

(i) The worker is paid or is in an approved work training program on a voluntary basis;

(ii) Representatives of local union central bodies or similar labor union organizations have been consulted;

(iii) Such paid employment will not result in the displacement of employed workers, or be applied in skills, crafts, or trades in which there is a surplus of available gainful labor in the locality, or impair existing contracts for services;

(iv) The rates of pay and other conditions of employment will not be less than those paid or provided for work of a similar nature in the locality in which the work is being performed; and

(v) The Attorney General of the United States has certified that the work-release laws or regulations of the jurisdiction involved are in conformity with the requirements of Executive Order 11755, as amended by Executive Orders 12608 and 12943. (End of clause)

35. *FAR 52.222-4 CONTRACT WORK HOURS AND SAFETY STANDARDS ACT—OVERTIME COMPENSATION (SEPT 2000)

(a) *Overtime requirements*. No Contractor or subcontractor employing laborers or mechanics (see Federal Acquisition Regulation 22.300) shall require or permit them to work over 40 hours in any workweek unless they are paid at least 1 and 1/2 times the basic rate of pay for each hour worked over 40 hours.

(b) *Violation; liability for unpaid wages; liquidated damages*. The responsible Contractor and subcontractor are liable for unpaid wages if they violate the terms in paragraph (a) of this clause. In addition, the Contractor and subcontractor are liable for liquidated damages payable to the Government. The Contracting Officer will assess liquidated damages at the rate of $10 per affected employee for each calendar day on which the employer required or permitted the employee to work in excess of the standard workweek of 40 hours without paying overtime wages required by the Contract Work Hours and Safety Standards Act.

(c) *Withholding for unpaid wages and liquidated damages*. The Contracting Officer will withhold from payments due under the contract sufficient funds required to satisfy any Contractor or subcontractor liabilities for unpaid wages and liquidated damages. If amounts withheld under the contract are insufficient to satisfy Contractor or subcontractor liabilities, the Contracting Officer will withhold payments from other Federal or Federally assisted contracts held by the same Contractor that are subject to the Contract Work Hours and Safety Standards Act.

(d) *Payrolls and basic records*. (1) The Contractor and its subcontractors shall maintain payrolls and basic payroll records for all laborers and mechanics working on the contract during the contract and shall make them available to the Government until 3 years after contract completion. The records shall contain the name and address of each employee, social security number, labor classifications, hourly rates of wages paid, daily and weekly number of hours worked, deductions made, and actual wages paid. The records need not duplicate those required for construction work by Department of Labor regulations at 29 CFR 5.5(a)(3) implementing the Davis-Bacon Act .

(2) The Contractor and its subcontractors shall allow authorized representatives of the Contracting Officer or the Department of Labor to inspect, copy, or transcribe records maintained under paragraph (d)(1) of this clause. The Contractor or subcontractor also shall allow authorized representatives of the Contracting Officer or Department of Labor to interview employees in the workplace during working hours.

(e) *Subcontracts*. The Contractor shall insert the provisions set forth in paragraphs (a) through (d) of this clause in subcontracts exceeding $100,000 and require subcontractors to include these provisions in any lower-tier subcontracts. The Contractor shall be responsible for compliance by any subcontractor or lower-tier subcontractor with the provisions set forth in paragraphs (a) through (d) of this clause.
(End of clause)

36. *FAR 52.222-6 DAVIS-BACON ACT (FEB 1995)

(a) All laborers and mechanics employed or working upon the site of the work will be paid unconditionally and not less often than once a week, and without subsequent deduction or rebate on any account (except such payroll deductions as are permitted by regulations issued by the Secretary of Labor under the Copeland Act (29 CFR Part 3)), the full amount of wages and bona fide fringe benefits (or cash equivalents thereof) due at time of payment computed at rates not less than those contained in the wage determination of the Secretary of Labor which is attached hereto and made a part hereof, regardless of any contractual relationship which may be alleged to exist between the Contractor and such laborers and mechanics. Contributions made or costs reasonably anticipated for bona fide fringe benefits under section 1(b)(2) of the Davis-Bacon Act on behalf of laborers or mechanics are considered wages paid to such laborers or mechanics, subject to the provisions of paragraph (d) of this clause; also, regular contributions made or costs incurred for more than a weekly period (but not less often than quarterly) under plans, funds, or programs which cover the particular weekly period, are deemed to be constructively made or incurred during such period. Such laborers and mechanics shall be paid not less than the appropriate wage rate and fringe benefits in the wage determination for the classification of work actually performed, without regard to skill, except as provided in the clause entitled Apprentices and Trainees. Laborers or mechanics performing work in more than one classification may be compensated at the rate specified for each classification for the time actually worked therein; provided, that the employer's payroll records accurately set forth the time spent in each classification in which work is performed. The wage determination (including any additional classifications and wage rates conformed under paragraph (b) of this clause) and the Davis-Bacon poster (WH-1321) shall be posted at all times by the Contractor and its subcontractors at the site of the work in a prominent and accessible place where it can be easily seen by the workers.

(b) (1) The Contracting Officer shall require that any class of laborers or mechanics, which is not listed in the wage determination and which is to be employed under the contract shall be classified in conformance with the wage determination. The Contracting Officer shall approve an additional classification and wage rate and fringe benefits therefor only when all the following criteria have been met:

(i) The work to be performed by the classification requested is not performed by a classification in the wage determination.

(ii) The classification is utilized in the area by the construction industry.

(iii) The proposed wage rate, including any bona fide fringe benefits, bears a reasonable relationship to the wage rates contained in the wage determination.

(2) If the Contractor and laborers and mechanics to be employed in the classification (if known), or their representatives, and the Contracting Officer agree on the classification and wage rate (including the amount designated for fringe benefits, where appropriate), a report of the action taken shall be sent by the Contracting Officer to the Administrator of the Wage and Hour Division, Employment Standards Administration, U.S. Department of Labor, Washington, DC 20210. The Administrator or an authorized representative will approve, modify, or disapprove every additional classification action within 30 days of receipt and so advise the Contracting Officer or will notify the Contracting Officer within the 30-day period that additional time is necessary.

(3) In the event the Contractor, the laborers or mechanics to be employed in the classification, or their representatives, and the Contracting Officer do not agree on the proposed classification and wage rate (including the amount designated for fringe benefits, where appropriate), the Contracting Officer shall refer the questions, including the views of all interested parties and the recommendation of the Contracting Officer, to the Administrator of the Wage and Hour Division for determination. The Administrator, or an authorized

representative, will issue a determination within 30 days of receipt and so advise the Contracting Officer or will notify the Contracting Officer within the 30-day period that additional time is necessary.

(4) The wage rate (including fringe benefits, where appropriate) determined pursuant to subparagraphs (b)(2) and (b)(3) of this clause shall be paid to all workers performing work in the classification under this contract from the first day on which work is performed in the classification.

(c) Whenever the minimum wage rate prescribed in the contract for a class of laborers or mechanics includes a fringe benefit which is not expressed as an hourly rate, the Contractor shall either pay the benefit as stated in the wage determination or shall pay another bona fide fringe benefit or an hourly cash equivalent thereof.

(d) If the Contractor does not make payments to a trustee or other third person, the Contractor may consider as part of the wages of any laborer or mechanic the amount of any costs reasonably anticipated in providing bona fide fringe benefits under a plan or program; provided, that the Secretary of Labor has found, upon the written request of the Contractor, that the applicable standards of the Davis-Bacon Act have been met. The Secretary of Labor may require the Contractor to set aside in a separate account assets for the meeting of obligations under the plan or program.

37. *FAR 52.222-7 WITHHOLDING OF FUNDS (FEB 1988)

The Contracting Officer shall, upon his or her own action or upon written request of an authorized representative of the Department of Labor, withhold or cause to be withheld from the Contractor under this contract or any other Federal contract with the same Prime Contractor, or any other Federally assisted contract subject to Davis-Bacon prevailing wage requirements, which is held by the same Prime Contractor, so much of the accrued payments or advances as may be considered necessary to pay laborers and mechanics, including apprentices, trainees, and helpers, employed by the Contractor or any subcontractor the full amount of wages required by the contract. In the event of failure to pay any laborer or mechanic, including any apprentice, trainee, or helper, employed or working on the site of the work, all or part of the wages required by the contract, the Contracting Officer may, after written notice to the Contractor, take such action as may be necessary to cause the suspension of any further payment, advance, or guarantee of funds until such violations have ceased.

38. *FAR 52.222-8 PAYROLLS AND BASIC RECORDS (FEB 1988)

(a) Payrolls and basic records relating thereto shall be maintained by the Contractor during the course of the work and preserved for a period of 3 years thereafter for all laborers and mechanics working at the site of the work. Such records shall contain the name, address, and social security number of each such worker, his or her correct classification, hourly rates of wages paid (including rates of contributions or costs anticipated for bona fide fringe benefits or cash equivalents thereof of the types described in section 1(b)(2)(B) of the Davis-Bacon Act), daily and weekly number of hours worked, deductions made, and actual wages paid. Whenever the Secretary of Labor has found, under paragraph (d) of the clause entitled Davis-Bacon Act, that the wages of any laborer or mechanic include the amount of any costs reasonably anticipated in providing benefits under a plan or program described in section 1(b)(2)(B) of the Davis-Bacon Act, the Contractor shall maintain records which show that the commitment to provide such benefits is enforceable, that the plan or program is financially responsible, and that the plan or program has been communicated in writing to the laborers or mechanics affected and records which show the costs anticipated or the actual cost incurred in providing such benefits. Contractors employing apprentices or trainees under approved programs shall maintain written evidence of the registration of apprenticeship programs and certification of trainee programs, the registration of apprentices and trainees, and the ratios and wage rates prescribed in the applicable programs.

(b) (1) The Contractor shall submit weekly for each week in which any contract work is performed a coy of all payrolls to the Contracting Officer. The payrolls submitted shall set out accurately and completely all of the information required to be maintained under paragraph (a) of this clause. This information may be submitted in any form desired. Optional Form WH-347 (Federal Stock Number 029-005-00014-1) is available for this purpose and may be purchased from the Superintendent of Documents, U.S. Government Printing Office, Washington, DC 20402. The Prime Contractor is responsible for the submission of copies of payrolls by all subcontractors.

(2) Each payroll submitted shall be accompanied by a "Statement of Compliance," signed by the Contractor or subcontractor or his or her agent who pays or supervises the payment of the persons employed under the contract and shall certify--

(i) That the payroll for the payroll period contains the information required to be maintained under paragraph (a) of this clause and that such information is correct and complete;

(ii) That each laborer or mechanic (including each helper, apprentice, and trainee) employed on the contract during the payroll period has been paid the full weekly wages earned, without rebate, either directly or indirectly, and that no deductions have been made either directly or indirectly, and that no deductions have been made either directly or indirectly from the full wages earned, other than permissible deductions as set forth in the Regulations, 29 CFR Part 3; and

(iii) That each laborer or mechanic has been paid not less than the applicable wage rates and fringe benefits or cash equivalents for the classification of work performed, as specified in the applicable wage determination incorporated into the contract.

(3) The weekly submission of a properly executed certification set forth on the reverse side of Optional Form WH-347 shall satisfy the requirement for submission of the "Statement of Compliance" required by subparagraph (b)(2) of this clause.

(4) The falsification of any of the certifications in this clause may subject the Contractor or subcontractor to civil or criminal prosecution under Section 1001 of Title 18 and Section 3729 of Title 31 of the United States Code.

(c) The Contractor or subcontractor shall make the records required under paragraph (a) of this clause available for inspection, copying, or transcription by the Contracting Officer or authorized representatives of the Contracting Officer or the Department of Labor. The Contractor of subcontractor shall permit the Contracting Officer or representatives of the Contracting Officer or the Department of Labor to interview employees during working hours on the job. If the Contractor or subcontractor fails to submit required records or to make them available, the Contracting Officer may, after written notice to the Contractor, take such action as may be necessary to cause the suspension of any further payment. Furthermore, failure to submit the required records upon request or to make such records available may be grounds for debarment action pursuant to 29 CFR 5.12.

39. *FAR 52.222-9 APPRENTICES AND TRAINEES (FEB 1988)

(a) Apprentices. Apprentices will be permitted to work at less than the predetermined rate for the work they performed when they are employed pursuant to and individually registered in a bona fide apprenticeship program registered with the U.S. Department of Labor, Employment and Training Administration, Bureau of Apprenticeship and Training, or with a State Apprenticeship Agency recognized by the Bureau, or if a person is employed in his or her first 90 days of probationary employment as an apprentice in such an apprenticeship program, who is not individually registered in the program, but who has been certified by the Bureau of Apprenticeship and Training or a State Apprenticeship Agency (where appropriate) to be eligible for probationary employment as an apprentice. The allowable ratio of apprentices to journeymen on the job site in any craft classification shall not be greater than the ratio permitted to the Contractor as to the entire work force under the registered program. Any worker listed on a payroll at an apprentice wage rate, who is not registered or otherwise employed as stated in this paragraph, shall be paid not less than the applicable wage determination for the classification of work actually performed. In addition, any apprentice performing work on the job site in excess of the ratio permitted under the registered program shall be paid not less than the applicable wage rate on the wage determination for the work actually performed. Where a Contractor is performing construction on a project in a locality other than that in which its program is registered, the ratios and wage rates (expressed in percentages of the journeyman's hourly rate) specified in the Contractor's or subcontractor's registered program shall be observed. Every apprentice must be paid at not less than the rate specified in the registered program for the apprentice's level of progress, expressed as a percentage of the journeyman hourly rate specified in the applicable wage determination. Apprentices shall be paid fringe benefits in accordance with the provisions of the apprenticeship program. If the apprenticeship program does not specify fringe benefits, apprentices must be paid the full amount of fringe benefits listed on the wage determination for the applicable classification. If the Administrator determines that a different practice prevails for the applicable apprentice classification, fringes shall be paid in accordance with that determination. In the event the Bureau of Apprenticeship and Training, or a State Apprenticeship Agency

recognized by the Bureau, withdraws approval of an apprenticeship program, the Contractor will not longer be permitted to utilize apprentices at less than the applicable predetermined rate for the work performed until an acceptable program is approved.

(b) Trainees. Except as provided in 29 CFR 5.16, trainees will not be permitted to work at less than the predetermined rate for the work performed unless they are employed pursuant to and individually registered in a program which has received prior approval, evidenced by formal certification by the U.S. Department of Labor, Employment and Training Administration. The ratio of trainees to journeymen on the job site shall not be greater than permitted under the plan approved by the Employment and Training Administration. Every trainee must be paid at not less than the rate specified in the approved program for the trainee's level of progress, expressed as a percentage of the journeyman hourly rate specified in the applicable wage determination. Trainees shall be paid fringe benefits in accordance with the provisions of the trainee program. If the trainee program does not mention fringe benefits, trainees shall be paid the full amount of fringe benefits listed in the wage determination unless the Administrator of the Wage and Hour Division determines that there is an apprenticeship program associated with the corresponding journeyman wage rate in the wage determination which provides for less than full fringe benefits for apprentices. Any employee listed on the payroll at a trainee rate who is not registered and participating in a training plan approved by the Employment and Training Administration shall be paid not less than the applicable wage rate in the wage determination for the classification of work actually performed. In addition, any trainee performing work on the job site in excess of the ratio permitted under the registered program shall be paid not less than the applicable wage rate in the wage determination for the work actually performed. In the event the Employment and Training Administration withdraws approval of a training program, the Contractor will no longer be permitted to utilize trainees at less than the applicable predetermined rate for the work performed until an acceptable program is approved.

(c) Equal employment opportunity. The utilization of apprentices, trainees, and journeymen under this clause shall be inconformity with the equal employment opportunity requirements of Executive Order 11246, as amended, and 29 CFR Part 30.

40. *FAR 52.222-10 COMPLIANCE WITH COPELAND ACT REQUIREMENTS (FEB 1988)

The Contractor shall comply with the requirements of 29 CFR Part 3, which are hereby incorporated by reference in this contract.

41. *FAR 52.222-11 SUBCONTRACTS (LABOR STANDARDS) (FEB 1988)

(a) The Contractor or subcontractor shall insert in any subcontracts the clauses entitled Davis-Bacon Act, Contract Work Hours and Safety Standards Act--Overtime Compensation, Apprentices and Trainees, Payrolls and Basic Records, Compliance with Copeland Act Requirements, Withholding of Funds, Subcontracts (Labor Standards), Contract Termination--Debarment, Disputes Concerning Labor Standards, Compliance with Davis-Bacon and Related Act Regulations ,and Certification of Eligibility, and such other clauses as the Contracting Officer may, by appropriate instructions, require, and also a clause requiring subcontractors to include these clauses in any lower tier subcontracts. The Prime Contractor shall be responsible for compliance by any subcontractor or lower tier subcontractor with all the contract clauses cited in this paragraph.

(b) (1) Within 14 days after award of the contract, the Contractor shall deliver to the Contracting Officer a completed Statement and Acknowledgment Form (SF 1413) for each subcontract, including the subcontractor's signed and dated acknowledgment that the clauses set forth in paragraph (a) of this clause have been included in the subcontract.

(2) Within 14 days after the award of any subsequently awarded subcontract the Contractor shall deliver to the Contracting Officer an updated completed SF 1413 for such additional subcontract.

42. *FAR 52.222-12 CONTRACT TERMINATION--DEBARMENT (FEB 1988)

A breach of the contract clauses entitled Davis-Bacon Act, Contract Work Hours and Safety Standards Act--Overtime Compensation, Apprentices and Trainees, Payrolls and Basic Records, Compliance with Copeland Act Requirements, Subcontracts (Labor Standards), Compliance with Davis-Bacon and Related Act Regulations, or Certification of Eligibility may be grounds for termination of the contract, and for debarment as a Contractor and subcontractor as provided in 29 CFR 5.12.

43. *FAR 52.222-13 COMPLIANCE WITH DAVIS-BACON AND RELATED ACT REGULATIONS (FEB 1988)

All rulings and interpretations of the Davis-Bacon and Related Acts contained in 29 CFR Parts 1, 3, and 5 are hereby incorporated by reference in this contract.

44. *FAR 52.222-14 DISPUTES CONCERNING LABOR STANDARDS (FEB 1988)

The United States Department of Labor has set forth in 29 CFR Parts 5, 6, and 7 procedures for resolving disputes concerning labor standards requirements. Such disputes shall be resolved in accordance with those procedures and not the Disputes clause of this contract. Disputes within the meaning of this clause include disputes between the Contractor (or any of its subcontractors) and the contracting agency the U.S. Department of Labor, or the employees of their representatives.

45. *FAR 52.222-15 CERTIFICATION OF ELIGIBILITY (FEB 1988)

(a) By entering into this contract, the Contractor certifies that neither it (nor he or she) nor any person or firm who has an interest in the Contractor's firm is a person or firm ineligible to be awarded Government contracts by virtue of section 3(a) of the Davis-Bacon Act or 29 CFR 5.12(a)(1).

(b) No part of this contract shall be subcontracted to any person or firm ineligible for award of a Government contract by virtue of section 3(a) of the Davis-Bacon Act or 29 CFR 5.12(a)(1).

(c) The penalty for making false statements is prescribed in the U.S. Criminal Code, 18 U.S.C. 1001.

46. *FAR 52.222-26 EQUAL OPPORTUNITY (APR 2002)

(a) *Definition*. "United States," as used in this clause, means the 50 States, the District of Columbia, Puerto Rico, the Northern Mariana Islands, American Samoa, Guam, the U.S. Virgin Islands, and Wake Island.

(b) If, during any 12-month period (including the 12 months preceding the award of this contract), the Contractor has been or is awarded nonexempt Federal contracts and/or subcontracts that have an aggregate value in excess of $10,000, the Contractor shall comply with paragraphs (b)(1) through (b)(11) of this clause, except for work performed outside the United States by employees who were not recruited within the United States. Upon request, the Contractor shall provide information necessary to determine the applicability of this clause.

(1) The Contractor shall not discriminate against any employee or applicant for employment because of race, color, religion, sex, or national origin. However, it shall not be a violation of this clause for the Contractor to extend a publicly announced preference in employment to Indians living on or near an Indian reservation, in connection with employment opportunities on or near an Indian reservation, as permitted by 41 CFR 60-1.5.

(2) The Contractor shall take affirmative action to ensure that applicants are employed, and that employees are treated during employment, without regard to their race, color, religion, sex, or national origin. This shall include, but not be limited to—

(i) Employment;
(ii) Upgrading;
(iii) Demotion;

(iv) Transfer;
(v) Recruitment or recruitment advertising;
(vi) Layoff or termination;
(vii) Rates of pay or other forms of compensation; and
(viii) Selection for training, including apprenticeship.

(3) The Contractor shall post in conspicuous places available to employees and applicants for employment the notices to be provided by the Contracting Officer that explain this clause.

(4) The Contractor shall, in all solicitations or advertisements for employees placed by or on behalf of the Contractor, state that all qualified applicants will receive consideration for employment without regard to race, color, religion, sex, or national origin.

(5) The Contractor shall send, to each labor union or representative of workers with which it has a collective bargaining agreement or other contract or understanding, the notice to be provided by the Contracting Officer advising the labor union or workers' representative of the Contractor's commitments under this clause, and post copies of the notice in conspicuous places available to employees and applicants for employment.

(6) The Contractor shall comply with Executive Order 11246, as amended, and the rules, regulations, and orders of the Secretary of Labor.

(7) The Contractor shall furnish to the contracting agency all information required by Executive Order 11246, as amended, and by the rules, regulations, and orders of the Secretary of Labor. The Contractor shall also file Standard Form 100 (EEO-1), or any successor form, as prescribed in 41 CFR part 60-1. Unless the Contractor has filed within the 12 months preceding the date of contract award, the Contractor shall, within 30 days after contract award, apply to either the regional Office of Federal Contract Compliance Programs (OFCCP) or the local office of the Equal Employment Opportunity Commission for the necessary forms.

(8) The Contractor shall permit access to its premises, during normal business hours, by the contracting agency or the OFCCP for the purpose of conducting on-site compliance evaluations and complaint investigations. The Contractor shall permit the Government to inspect and copy any books, accounts, records (including computerized records), and other material that may be relevant to the matter under investigation and pertinent to compliance with Executive Order 11246, as amended, and rules and regulations that implement the Executive Order.

(9) If the OFCCP determines that the Contractor is not in compliance with this clause or any rule, regulation, or order of the Secretary of Labor, this contract may be canceled, terminated, or suspended in whole or in part and the Contractor may be declared ineligible for further Government contracts, under the procedures authorized in Executive Order 11246, as amended. In addition, sanctions may be imposed and remedies invoked against the Contractor as provided in Executive Order 11246, as amended; in the rules, regulations, and orders of the Secretary of Labor; or as otherwise provided by law.

(10) The Contractor shall include the terms and conditions of paragraphs (b)(1) through (11) of this clause in every subcontract or purchase order that is not exempted by the rules, regulations, or orders of the Secretary of Labor issued under Executive Order 11246, as amended, so that these terms and conditions will be binding upon each subcontractor or vendor.

(11) The Contractor shall take such action with respect to any subcontract or purchase order as the Contracting Officer may direct as a means of enforcing these terms and conditions, including sanctions for noncompliance, provided, that if the Contractor becomes involved in, or is threatened with, litigation with a subcontractor or vendor as a result of any direction, the Contractor may request the United States to enter into the litigation to protect the interests of the United States.

(c) Notwithstanding any other clause in this contract, disputes relative to this clause will be governed by the procedures in 41 CFR 60-1.1.

(End of clause)

47. *FAR 52.222-27 AFFIRMATIVE ACTION COMPLIANCE REQUIREMENTS FOR CONSTRUCTION (FEB 1999)

(a) Definitions.

"Covered area," as used in this clause, means the geographical area described in the solicitation for this contract.

“Deputy Assistant Secretary,” as used in this clause, means the Deputy Assistant Secretary for Federal Contract Compliance, U.S. Department of Labor, or a designee

"Employer's identification number," as used in this clause, means the Federal Social Security number used on the employer's quarterly Federal tax return, U.S. Treasury Department Form 941.

"Minority," as used in this clause, means--

(1) American Indian or Alaskan Native (all persons having origins in any of the original peoples of North America and maintaining identifiable tribal affiliations through membership and participation or community identification).

(2) Asian and Pacific Islander (all persons having origins in any of the original peoples of the Far East, Southeast Asia, the Indian Subcontinent, or the Pacific Islands);

(3) Black (all persons having origins in any of the black African racial groups not of Hispanic origin); and

(4) Hispanic (all persons of Mexican, Puerto Rican, Cuban, Central or South American, or other Spanish culture or origin, regardless of race).

(b) If the Contractor, or a subcontractor at any tier, subcontracts a portion of the work involving any construction trade each such subcontract in excess of $10,000 shall include this clause and the Notice containing the goals for minority and female participation stated in the solicitation for this contract.

(c) If the Contractor is participating in a Hometown Plan (41 CFR 60-4) approved by the U.S. Department of Labor in a covered area, either individually or through an association, its affirmative actin obligations on all work in the plan area (including goals) shall comply with the plan for those trades that have unions participating in the plan. Contractors must be able to demonstrate participation in, and compliance with, the provisions of the plan. Each Contractor or subcontractor participating in an approved plan is also required to comply with its obligations under the Equal Opportunity clause, and to make a good faith effort to achieve each goal under the plan in each trade in which it has employees. The overall good-faith performance by other Contractors or subcontractors toward a goal in an approved plan does not excuse any Contractor's or subcontractor's failure to make good-faith efforts to achieve the plan's goals.

(d) The Contractor shall implement the affirmative action procedures in subparagraphs (g)(1) through (16) of this clause. The goals stated in the solicitation for this contract are expressed as percentages of the total hours of employment and training of minority and female utilization that the Contractor should reasonably be able to achieve in each construction trade in which it has employees in the covered area. If the Contractor performs construction work in a geographical area located outside of the covered area, it shall apply the goals established for the geographical area where that work is actually performed. The Contractor is expected to make substantially uniform progress toward its goals in each craft.

(e) Neither the terms and conditions of any collective bargaining agreement, nor the failure by a union with which the Contractor has a collective bargaining agreement, to refer minorities or women shall excuse the Contractor's obligations under this clause, Executive Order 11246, as amended, or the regulations thereunder.

(f) In order for the nonworking training hours of apprentices and trainees to be counted in meeting the goals, apprentices and trainees must be employed by the Contractor during the training period, and the Contractor must have made a commitment to employ the apprentices and trainees at the completion of their training, subject to the availability of employment opportunities. Trainees must be trained pursuant to training programs approved by the U.S. Department of Labor.

(g) The Contractor shall take affirmative action to ensure equal employment opportunity. The evaluation of the Contractor's compliance with this clause shall be based upon its effort to achieve maximum results from its actions. The Contractor shall document these efforts fully and implement affirmative action steps at least as extensive as the following:

(1) Ensure a working environment free of harassment, intimidation, and coercion at all sites and in all facilities where the Contractor's employees are assigned to work. The Contractor, if possible, will assign two or more women to each construction project. The Contractor shall ensure that foremen, superintendents, and other onsite supervisory personnel are aware of and carry out the Contractor's obligation to maintain such a working environment, with specific attention to minority or female individuals working at these sites or facilities.

(2) Establish and maintain a current list of sources for minority and female recruitment. Provide written notification to minority and female recruitment sources and community organizations when the Contractor or its unions have employment opportunities available, and maintain a record of the organizations' responses.

(3) Establish and maintain a current file of the names, addresses, and telephone numbers of each minority and female off-the-street applicant, referrals of minorities or females from unions, recruitment sources, or community organizations, and the action taken with respect to each individual. If an individual was sent to the union hiring hall for referral and not referred back to the Contractor by the union or, if referred back, not employed by the Contractor, this shall be documented in the file, along with whatever additional actions the Contractor may have taken.

(4) Immediately notify the Deputy Assistant Secretary when the union or unions with which the Contractor has a collective bargaining agreement has not referred back to the Contractor a minority or woman sent by the Contractor, or when the Contractor has other information that the union referral process has impeded the Contractor's efforts to meet its obligations.

(5) Develop on-the-job training opportunities and/or participate in training programs for the area that expressly include minorities and women, including upgrading programs and apprenticeship and trainee programs relevant to the Contractor's employment needs, especially those programs funded or approved by the Department of Labor. The Contractor shall provide notice of these programs to the sources compiled under subparagraph (g)(2) of this clause.

(6) Disseminate the Contractor's equal employment policy by--

(i) Providing notice of the policy to unions and to training, recruitment, and outreach programs, and requesting their cooperation in assisting the Contractor in meeting its contract obligations;

(ii) Including the policy in any policy manual and in collective bargaining agreements;

(iii) Publicizing the policy in the company newspaper, annual report, etc.;

(iv) Reviewing the policy with all management personnel and with all minority and female employees at least once a year; and

(v) Posting the policy on bulletin boards accessible to employees at each location where construction work is performed.

(7) Review, at least annually, the Contractor's equal employment policy and affirmative action obligations with all employees having responsibility for hiring, assignment, layoff, termination, or other employment decisions. Conduct review of this policy with all on-site supervisory personnel before initiating construction work at a job site. A written record shall be made and maintained identifying the time and place of these meetings, persons attending, subject matter discussed, and disposition of the subject matter.

(8) Disseminate the Contractor's equal employment policy externally by including it in any advertising in the news media, specifically including minority and female news media. Provide written notification to, and discuss this policy with, other Contractors and subcontractors with which the Contractor does or anticipates doing business.

(9) Direct recruitment efforts, both oral and written, to minority, female, and community organizations, to schools with minority and female students, and to minority and female recruitment and training organizations serving the Contractor's recruitment area and employment needs. Not later than 1 month before the date for acceptance of applications for apprenticeship or training by any recruitment source, send written notification to organizations such as the above, describing the openings, screening procedures, and tests to be used in the selection process.

(10) Encourage present minority and female employees to recruit minority persons and women. Where reasonable, provide after-school, summer, and vacation employment to minority and female youth both on the site and in other areas of the Contractor's workforce.

(11) Validate all tests and other selection requirements where required under 41 CFR 60-3.

(12) Conduct, at least annually, an inventory and evaluation at least of all minority and female personnel for promotional opportunities. Encourage these employees to seek or to prepare for, through appropriate training, etc., opportunities for promotion.

(13) Ensure that seniority practices job classifications, work assignments, and other personnel practices do not have a discriminatory effect by continually monitoring all personnel and employment-related activities to ensure that the Contractor's obligations under this contract are being carried out.

(14) Ensure that all facilities and company activities are nonsegregated except that separate or single-user toilet and necessary changing facilities shall be provided to assure privacy between the sexes.

(15) Maintain a record of solicitations for subcontracts for minority and female construction contractors and suppliers, including circulation of solicitations to minority and female contractor associations and other business associations.

(16) Conduct a review, at lest annually, of all supervisors' adherence to and performance under the Contractor's equal employment policy and affirmative action obligations.

(h) The Contractor is encouraged to participate in voluntary associations that may assist in fulfilling one or more of the affirmative action obligations contained in subparagraphs (g)(1) through (16) of this clause. The efforts of a contractor association, joint contractor-union, contractor-community, or similar group of which the contractor is a member and participant may be asserted as fulfilling one or more of its obligations under subparagraphs (g)(1) through (16) of this clause, provided the Contractor--

(1) Actively participates in the group;

(2) Makes every effort to ensure that the group has a positive impact on the employment of minorities and women in the industry;

(3) Ensures that concrete benefits of the program are reflected in the Contractor's minority and female workforce participation;

(4) Makes a good-faith effort to meet its individual goals and timetables; and

(5) Can provide access to documentation that demonstrates the effectiveness of actions taken on behalf of the Contractor. The obligation to comply is the Contractor's, and failure of such a group to fulfill an obligation shall not be a defense for the Contractor's noncompliance.

(i) A single goal for minorities and a separate single goal for women shall be established. The Contractor is required to provide equal employment opportunity and to take affirmative action for all minority groups, both male and female, and all women, both minority and nonminority. Consequently, the Contractor may be in violation of Executive Order 11246, as amended, if a particular group is employed in a substantially disparate manner.

(j) The Contractor shall not use goals or affirmative action standards to discriminate against any person because of race, color, religion, sex, or national origin.

(k) The Contractor shall not enter into any subcontract with any person or firm debarred from Government contracts under Executive Order 11246, as amended.

(l) The Contractor shall carry out such sanctions and penalties for violation of this clause and of the Equal Opportunity clause, including suspension, termination, and cancellation of existing subcontracts, as may be imposed or ordered under Executive Order 11246, as amended, and its implementing regulations, by the OFCCP. Any failure to carry out these sanctions and penalties as ordered shall be a violation of this clause and Executive Order 11246, as amended.

(m) The Contractor in fulfilling its obligations under this clause shall implement affirmative action procedures at least as extensive as those prescribed in paragraph (g) of this clause, so as to achieve maximum results from its efforts to ensure equal employment opportunity. If the Contractor fails to comply with the requirements of Executive Order 11246, as amended, the implementing regulations, or this clause, the Deputy Assistant Secretary shall take action as prescribed in 41 CFR 60-4.8.

(n) The Contractor shall designate a responsible official to--

(1) Monitor all employment-related activity to ensure that the Contractor's equal employment policy is being carried out;

(2) Submit reports as may be required by the Government; and

(3) Keep records that shall at least include for each employee the name, address, telephone number, construction trade, union affiliation (if any), employee identification number, social security number, race, sex, status (e.g., mechanic, apprentice, trainee, helper, or laborer), dates of changes in status, hours worked per week in the indicated trade, rate of pay, and locations at which the work was performed. Records shall be maintained in an easily understandable and retrievable form; however, to the degree that existing records satisfy this requirement, separate records are not required to be maintained.

(o) Nothing contained herein shall be construed as a limitation upon the application of other laws that establish different standards of compliance or upon the requirements for the hiring of local or other area residents (e.g., those under the Public Works Employment Act of 1977 and the Community Development Block Grant Program).

48. *FAR 52.222-35 EQUAL OPPORTUNITY FOR SPECIAL DISABLED VETERANS, VETERANS OF THE VIETNAM ERA, AND OTHER ELIGIBLE VETERANS (DEC 2001)

(a) *Definitions*. As used in this clause—

"All employment openings" means all positions except executive and top management, those positions that will be filled from within the Contractor's organization, and positions lasting 3 days or less. This term includes full-time employment, temporary employment of more than 3 days duration, and part-time employment.

"Executive and top management" means any employee—

(1) Whose primary duty consists of the management of the enterprise in which the individual is employed or of a customarily recognized department or subdivision thereof;

(2) Who customarily and regularly directs the work of two or more other employees;

(3) Who has the authority to hire or fire other employees or whose suggestions and recommendations as to the hiring or firing and as to the advancement and promotion or any other change of status of other employees will be given particular weight;

(4) Who customarily and regularly exercises discretionary powers; and

(5) Who does not devote more than 20 percent or, in the case of an employee of a retail or service establishment, who does not devote more than 40 percent of total hours of work in the work week to activities that are not directly and closely related to the performance of the work described in paragraphs (1) through (4) of this definition. This paragraph (5) does not apply in the case of an employee who is in sole charge of an establishment or a physically separated branch establishment, or who owns at least a 20 percent interest in the enterprise in which the individual is employed.

"Other eligible veteran" means any other veteran who served on active duty during a war or in a campaign or expedition for which a campaign badge has been authorized.

"Positions that will be filled from within the Contractor's organization" means employment openings for which the Contractor will give no consideration to persons outside the Contractor's organization (including any affiliates, subsidiaries, and parent companies) and includes any openings the Contractor proposes to fill from regularly established "recall" lists. The exception does not apply to a particular opening once an employer decides to consider applicants outside of its organization.

"Qualified special disabled veteran" means a special disabled veteran who satisfies the requisite skill, experience, education, and other job-related requirements of the employment position such veteran holds or desires, and who, with or without reasonable accommodation, can perform the essential functions of such position.

"Special disabled veteran" means—

(1) A veteran who is entitled to compensation (or who but for the receipt of military retired pay would be entitled to compensation) under laws administered by the Department of Veterans Affairs for a disability—

(i) Rated at 30 percent or more; or

(ii) Rated at 10 or 20 percent in the case of a veteran who has been determined under 38 U.S.C. 3106 to have a serious employment handicap (*i.e*., a significant impairment of the veteran's ability to prepare for, obtain, or retain employment consistent with the veteran's abilities, aptitudes, and interests); or

(2) A person who was discharged or released from active duty because of a service-connected disability.

"Veteran of the Vietnam era" means a person who—

(1) Served on active duty for a period of more than 180 days and was discharged or released from active duty with other than a dishonorable discharge, if any part of such active duty occurred—

(i) In the Republic of Vietnam between February 28, 1961, and May 7, 1975; or

(ii) Between August 5, 1964, and May 7, 1975, in all other cases; or

(2) Was discharged or released from active duty for a service-connected disability if any part of the active duty was performed—

(i) In the Republic of Vietnam between February 28, 1961, and May 7, 1975; or

(ii) Between August 5, 1964, and May 7, 1975, in all other cases.

(b) *General*. (1) The Contractor shall not discriminate against the individual because the individual is a special disabled veteran, a veteran of the Vietnam era, or other eligible veteran, regarding any position for which the employee or applicant for employment is qualified. The Contractor shall take affirmative action to employ, advance in employment, and otherwise treat qualified special disabled veterans, veterans of the Vietnam era, and other

eligible veterans without discrimination based upon their disability or veterans' status in all employment practices such as—

(i) Recruitment, advertising, and job application procedures;

(ii) Hiring, upgrading, promotion, award of tenure, demotion, transfer, layoff, termination, right of return from layoff and rehiring;

(iii) Rate of pay or any other form of compensation and changes in compensation;

(iv) Job assignments, job classifications, organizational structures, position descriptions, lines of progression, and seniority lists;

(v) Leaves of absence, sick leave, or any other leave;

(vi) Fringe benefits available by virtue of employment, whether or not administered by the Contractor;

(vii) Selection and financial support for training, including apprenticeship, and on-the-job training under 38 U.S.C. 3687, professional meetings, conferences, and other related activities, and selection for leaves of absence to pursue training;

(viii) Activities sponsored by the Contractor including social or recreational programs; and

(ix) Any other term, condition, or privilege of employment.

(2) The Contractor shall comply with the rules, regulations, and relevant orders of the Secretary of Labor issued under the Vietnam Era Veterans' Readjustment Assistance Act of 1972 (the Act), as amended (38 U.S.C. 4211 and 4212).

(c) *Listing openings*. (1) The Contractor shall immediately list all employment openings that exist at the time of the execution of this contract and those which occur during the performance of this contract, including those not generated by this contract, and including those occurring at an establishment of the Contractor other than the one where the contract is being performed, but excluding those of independently operated corporate affiliates, at an appropriate local public employment service office of the State wherein the opening occurs. Listing employment openings with the U.S. Department of Labor's America's Job Bank shall satisfy the requirement to list jobs with the local employment service office.

(2) The Contractor shall make the listing of employment openings with the local employment service office at least concurrently with using any other recruitment source or effort and shall involve the normal obligations of placing a bona fide job order, including accepting referrals of veterans and nonveterans. This listing of employment openings does not require hiring any particular job applicant or hiring from any particular group of job applicants and is not intended to relieve the Contractor from any requirements of Executive orders or regulations concerning nondiscrimination in employment.

(3) Whenever the Contractor becomes contractually bound to the listing terms of this clause, it shall advise the State public employment agency in each State where it has establishments of the name and location of each hiring location in the State. As long as the Contractor is contractually bound to these terms and has so advised the State agency, it need not advise the State agency of subsequent contracts. The Contractor may advise the State agency when it is no longer bound by this contract clause.

(d) *Applicability*. This clause does not apply to the listing of employment openings that occur and are filled outside the 50 States, the District of Columbia, the Commonwealth of Puerto Rico, the Commonwealth of the Northern Mariana Islands, American Samoa, Guam, the Virgin Islands of the United States, and Wake Island.

(e) *Postings*. (1) The Contractor shall post employment notices in conspicuous places that are available to employees and applicants for employment.

(2) The employment notices shall—

(i) State the rights of applicants and employees as well as the Contractor's obligation under the law to take affirmative action to employ and advance in employment qualified employees and applicants who are special disabled veterans, veterans of the Vietnam era, and other eligible veterans; and

(ii) Be in a form prescribed by the Deputy Assistant Secretary for Federal Contract Compliance Programs, Department of Labor (Deputy Assistant Secretary of Labor), and provided by or through the Contracting Officer.

(3) The Contractor shall ensure that applicants or employees who are special disabled veterans are informed of the contents of the notice (e.g., the Contractor may have the notice read to a visually disabled veteran, or may lower the posted notice so that it can be read by a person in a wheelchair).

(4) The Contractor shall notify each labor union or representative of workers with which it has a collective bargaining agreement, or other contract understanding, that the Contractor is bound by the terms of the Act and is committed to take affirmative action to employ, and advance in employment, qualified special disabled veterans, veterans of the Vietnam era, and other eligible veterans.

(f) *Noncompliance*. If the Contractor does not comply with the requirements of this clause, the Government may take appropriate actions under the rules, regulations, and relevant orders of the Secretary of Labor issued pursuant to the Act.

(g) *Subcontracts*. The Contractor shall insert the terms of this clause in all subcontracts or purchase orders of $25,000 or more unless exempted by rules, regulations, or orders of the Secretary of Labor. The Contractor shall act as specified by the Deputy Assistant Secretary of Labor to enforce the terms, including action for noncompliance.

(End of clause)

49. *FAR 52.222-36 AFFIRMATIVE ACTION FOR WORKERS WITH DISABILITIES (JUN 1998)

(a) General.

(1) Regarding any position for which the employee or applicant for employment is qualified, the Contractor shall not discriminate against any employee or applicant because of physical or mental disability. The Contractor agrees to take affirmative action to employ, advance in employment, and otherwise treat qualified individuals with disabilities without discrimination based upon their physical or mental disability in all employment practices such as--

(i) Recruitment, advertising, and job application procedures;

(ii) Hiring, upgrading, promotion, award of tenure, demotion, transfer, layoff, termination, right of return from layoff, and rehiring;

(iii) Rates of pay or other forms of compensation and changes in compensation;

(iv) Job assignments, job classifications, orgizational structures, position descriptions, lines of progression, and senority lists;

(v) Leaves of absence, sick leave, or any other leave;

(vi) Fringe benefits available by virtue of employment, whether or not administered by the Contractor;

(vii) Selection and financial support for training, including apprenticeships, professional meetings, conferences, and other related activities, and selection for leaves of absence to pursue training;

(viii) Activities sponsored by the Contractor, including social or recreational programs; and

(ix) Any other term, condition, or priviledge of employment.

(2) The Contractor agrees to comply with the rules, regulations, and relevant orders of the Secretary of Labor (Secretary) issued under the Rehabilitation Act of 1973 (29 U.S.C. 793) (the Act), as amended.

(b) Postings.

(1) The Contractor agrees to post employment notices stating--

(i) The Contractor's obligation under the law to take affirmative action to employ and advance in employment qualified individuals with disabilities; and

(ii) The rights of applicants and employees.

(2) These notices shall be posted in conspicuous places that are available to employees and applicants for employment. The Contractor shall ensure that applicants and employees with disabilities are informed of the contents of the notice (e.g., the Contractor may have the notice read to visually disabled individual, or may lower the posted notice so that it might be read by a person in a wheelchair). The notices shall be in a form prescribed by the Deputy Assistant Secretary for Federal Contract Compliance of the U.S. Department of Labor (Deputy Assistant Secretary) and shall be provided by or through the Contracting Officer.

(3) The Contractor shall notify each labor union or representative of workers with which it has a collective bargaining agreement or other contract understanding, that the Contractor is bound by the terms of Section 503 of the Act and is committed to take affirmative action to employ, and advance in employment, qualified individuals with physical or mental disabilities.

(c) Noncompliance. If the Contractor does not comply with the requirements of this clause, appropriate actions may be taken under the rules, regulations, and relevant orders of the Secretary issued pursuant to the Act.

(d) Subcontracts. The Contractor shall include the terms of this clause in every subcontract or purchase order in excess of $10,000 unless exempted by rules, regulations, or orders of the Secretary. The Contractor shall act as specified by the Deputy Assistant Secretary to enforce the terms, including action for noncompliance.

50. *FAR 52.222-37 EMPLOYMENT REPORTS ON SPECIAL DISABLED VETERANS, VETERANS OF THE VIETNAM ERA, AND OTHER ELIGIBLE VETERANS (DEC 2001)

(a) Unless the Contractor is a State or local government agency, the Contractor shall report at least annually, as required by the Secretary of Labor, on—

(1) The number of special disabled veterans, the number of veterans of the Vietnam era, and other eligible veterans in the workforce of the Contractor by job category and hiring location; and

(2) The total number of new employees hired during the period covered by the report, and of the total, the number of special disabled veterans, the number of veterans of the Vietnam era, and the number of other eligible veterans; and

(3) The maximum number and the minimum number of employees of the Contractor during the period covered by the report.

(b) The Contractor shall report the above items by completing the Form VETS-100, entitled "Federal Contractor Veterans' Employment Report (VETS-100 Report)".

(c) The Contractor shall submit VETS-100 Reports no later than September 30 of each year beginning September 30, 1988.

(d) The employment activity report required by paragraph (a)(2) of this clause shall reflect total hires during the most recent 12-month period as of the ending date selected for the employment profile report required by paragraph (a)(1) of this clause. Contractors may select an ending date—

(1) As of the end of any pay period between July 1 andAugust 31 of the year the report is due; or

(2) As of December 31, if the Contractor has prior writtenapproval from the Equal Employment Opportunity Commission to do so for purposes of submitting the Employer Information Report EEO-1 (Standard Form 100).

(e) The Contractor shall base the count of veterans reported according to paragraph (a) of this clause on voluntary disclosure. Each Contractor subject to the reporting requirements at 38 U.S.C. 4212 shall invite all special disabled veterans, veterans of the Vietnam era, and other eligible veterans who wish to benefit under the affirmative action program at 38 U.S.C. 4212 to identify themselves to the Contractor. The invitation shall state that—

(1) The information is voluntarily provided;

(2) The information will be kept confidential;

(3) Disclosure or refusal to provide the information will not subject the applicant or employee to any adverse treatment; and

(4) The information will be used only in accordance with the regulations promulgated under 38 U.S.C. 4212.

(f) The Contractor shall insert the terms of this clause in all subcontracts or purchase orders of $25,000 or more unless exempted by rules, regulations, or orders of the Secretary of Labor.

(End of clause)

51. *FAR 52.222-38 COMPLIANCE WITH VETERANS' EMPLOYMENT REPORTING REQUIREMENTS (DEC 2001)

By submission of its offer, the offeror represents that, if it is subject to the reporting requirements of 38 U.S.C. 4212(d) (*i.e.*, if it has any contract containing Federal Acquisition Regulation clause 52.222-37, Employment Reports on Special Disabled Veterans, Veterans of the Vietnam Era, and Other Eligible Veterans), it has submitted the most recent VETS-100 Report required by that clause.

(End of provision)

52. *FAR 52.223-5 POLLUTION PREVENTION AND RIGHT-TO-KNOW INFORMATION (AUG 2003) [For Work on Federal Facilities]

(a) *Definitions*. As used in this clause—

"Priority chemical" means a chemical identified by the Interagency Environmental Leadership Workgroup or, alternatively, by an agency pursuant to Section 503 of Executive Order 13148 of April 21, 2000, Greening the Government through Leadership in Environmental Management.

"Toxic chemical" means a chemical or chemical category listed in 40 CFR 372.65.

(b) Executive Order 13148 requires Federal facilities to comply with the provisions of the Emergency Planning and Community Right-to-Know Act of 1986 (EPCRA) (42 U.S.C. 11001-11050) and the Pollution Prevention Act of 1990 (PPA) (42 U.S.C. 13101-13109).

(c) The Contractor shall provide all information needed by the Federal facility to comply with the following:

(1) The emergency planning reporting requirements of Section 302 of EPCRA.
(2) The emergency notice requirements of Section 304 of EPCRA.
(3) The list of Material Safety Data Sheets, required by Section 311 of EPCRA.
(4) The emergency and hazardous chemical inventory forms of Section 312 of EPCRA.
(5) The toxic chemical release inventory of Section 313 of EPCRA, which includes the reduction and recycling information required by Section 6607 of PPA.
(6) The toxic chemical, priority chemical, and hazardous substance release and use reduction goals of Sections 502 and 503 of Executive Order 13148.

(End of clause)

53. *FAR 52.223-6 DRUG-FREE WORKPLACE (MAY 2001)

(a) Definitions. As used in this clause--

"Controlled substance" means a controlled substance in schedules I through V of section 202 of the Controlled Substances Act (21 U.S.C. 812) and as further defined in regulation at 21 CFR 1308.11 - 1308.15.

"Conviction" means a finding of guilt (including a plea of nolo contendere) or imposition of sentence, or both, by any judicial body charged with the responsibility to determine violations of the Federal or State criminal drug statutes.

"Criminal drug statute" means a Federal or non-Federal criminal statute involving the manufacture, distribution, dispensing, possession or use of any controlled substance.

"Drug-free workplace" means the site(s) for the performance of work done by the Contractor in connection with a specific contract where employees of the Contractor are prohibited from engaging in the unlawful manufacture, distribution, dispensing, possession, or use of a controlled substance.

"Employee" means an employee of a Contractor directly engaged in the performance of work under a Government contract. "Directly engaged" is defined to include all direct cost employees and any other Contractor employee who has other than a minimal impact or involvement in contract performance.

"Individual" means an offeror/contractor that has no more than one employee including the offeror/contractor.

(b) The Contractor, if other than an individual, shall--within 30 days after award (unless a longer period is agreed to in writing for contracts of 30 days or more performance duration), or as soon as possible for contracts of less than 30 days performance duration--

(1) Publish a statement notifying its employees that the unlawful manufacture, distribution, dispensing, possession, or use of a controlled substance is prohibited in the Contractor's workplace and specifying the actions that will be taken against employees for violations of such prohibition;

(2) Establish an ongoing drug-free awareness program to inform such employees about--

(i) The dangers of drug abuse in the workplace;

(ii) The Contractor's policy of maintaining a drug-free workplace;

(iii) Any available drug counseling, rehabilitation, and employee assistance programs; and

(iv) The penalties that may be imposed upon employees for drug abuse violations occurring in the workplace.

(3) Provide all employees engaged in performance of the contract with a copy of the statement required by subparagraph (b)(1) of this clause;

(4) Notify such employees in writing in the statement required by subparagraph (b)(1) of this clause that, as a condition of continued employment on this contract, the employee will--

(i) Abide by the terms of the statement; and

(ii) Notify the employer in writing of the employee's conviction under a criminal drug statute for a violation occurring in the workplace no later than 5 days after such conviction.

(5) Notify the Contracting Officer in writing within 10 days after receiving notice under subdivision (b)(4)(ii) of this clause, from an employee or otherwise receiving actual notice of such conviction. The notice shall include the position title of the employee;

(6) Within 30 days after receiving notice under subdivision (b)(4)(ii) of this clause of a conviction, take one of the following actions with respect to any employee who is convicted of a drug abuse violation occurring in the workplace:

(i) Taking appropriate personnel action against such employee, up to and including termination; or

(ii) Require such employee to satisfactorily participate in a drug abuse assistance or rehabilitation program approved for such purposes by a Federal, State, or local health, law enforcement, or other appropriate agency; and

(7) Make a good faith effort to maintain a drug-free workplace through implementation of subparagraphs (b)(1) through (b)(6) of this clause.

(c) The Contractor, if an individual, agrees by award of the contract or acceptance of a purchase order, not to engage in the unlawful manufacture, distribution, dispensing, possession, or use of a controlled substance while performing this contract.

(d) In addition to other remedies available to the Government, the Contractor's failure to comply with the requirements of paragraph (b) or (c) of this clause may, pursuant to FAR 23.560, render the Contractor subject to suspension of contract payments, termination of the contract for default, and suspension or debarment.

54. FAR 52.223-9 ESTIMATE OF PERCENTAGE OF RECOVERED MATERIAL CONTENT FOR EPA-DESIGNATED PRODUCTS (AUG 2000) [For Contracts exceeding $100,000. EPA Designated product (available at http://www.epa.gov/cpg/)]

(a) Definitions. As used in this clause—

"Postconsumer material" means a material or finished product that has served its intended use and has been discarded for disposal or recovery, having completed its life as a consumer item. Postconsumer material is a part of the broader category of "recovered material."

"Recovered material" means waste materials and by-products recovered or diverted from solid waste, but the term does not include those materials and by-products generated from, and commonly reused within, an original manufacturing process.

(b) The Contractor, on completion of this contract, shall—

(1) Estimate the percentage of the total recovered material used in contract performance, including, if applicable, the percentage of postconsumer material content; and

(2) Submit this estimate to the Contracting Officer.

(End of clause)

55. *FAR 52.223-14 TOXIC CHEMICAL RELEASE REPORTING (AUG 2003) [For Contracts Over $100,000]

(a) Unless otherwise exempt, the Contractor, as owner or operator of a facility used in the performance of this contract, shall file by July 1 for the prior calendar year an annual Toxic Chemical Release Inventory Form (Form R) as described in sections 313(a) and (g) of the Emergency Planning and Community Right-to-Know Act of 1986 (EPCRA) (42 U.S.C. 11023(a) and (g)), and section 6607 of the Pollution Prevention Act of 1990 (PPA) (42 U.S.C. 13106). The Contractor shall file, for each facility subject to the Form R filing and reporting requirements, the annual Form R throughout the life of the contract.

(b) A Contractor-owned or -operated facility used in the performance of this contract is exempt from the requirement to file an annual Form R if—

(1) The facility does not manufacture, process, or otherwise use any toxic chemicals listed in 40 CFR 372.65;

(2) The facility does not have 10 or more full-time employees as specified in section 313(b)(1)(A) of EPCRA, 42 U.S.C. 11023(b)(1)(A);

(3) The facility does not meet the reporting thresholds of toxic chemicals established under section 313(f) of EPCRA, 42 U.S.C. 11023(f) (including the alternate thresholds at 40 CFR 372.27, provided an appropriate certification form has been filed with EPA);

(4) The facility does not fall within the following Standard Industrial Classification (SIC) codes or their corresponding North American Industry Classification System sectors:

(i) Major group code 10 (except 1011, 1081, and 1094.

(ii) Major group code 12 (except 1241).

(iii) Major group codes 20 through 39.

(iv) Industry code 4911, 4931, or 4939 (limited to facilities that combust coal and/or oil for the purpose of generating power for distribution in commerce).

(v) Industry code 4953 (limited to facilities regulated under the Resource Conservation and Recovery Act, Subtitle C (42 U.S.C. 6921, *et seq*.)), or 5169, or 5171, or 7389 (limited to facilities primarily engaged in solvent recovery services on a contract or fee basis); or

(5) The facility is not located in the United States or its outlying areas.

(c) If the Contractor has certified to an exemption in accordance with one or more of the criteria in paragraph (b) of this clause, and after award of the contract circumstances change so that any of its owned or operated facilities used in the performance of this contract is no longer exempt—

(1) The Contractor shall notify the Contracting Officer; and

(2) The Contractor, as owner or operator of a facility used in the performance of this contract that is no longer exempt, shall—

(i) Submit a Toxic Chemical Release Inventory Form (Form R) on or before July 1 for the prior calendar year during which the facility becomes eligible; and

(ii) Continue to file the annual Form R for the life of the contract for such facility.

(d) The Contracting Officer may terminate this contract or take other action as appropriate, if the Contractor fails to comply accurately and fully with the EPCRA and PPA toxic chemical release filing and reporting requirements.

(e) Except for acquisitions of commercial items as defined in FAR Part 2, the Contractor shall—

(1) For competitive subcontracts expected to exceed $100,000 (including all options), include a solicitation provision substantially the same as the provision at FAR 52.223-13, Certification of Toxic Chemical Release Reporting; and

(2) Include in any resultant subcontract exceeding $100,000 (including all options), the substance of this clause, except this paragraph (e).

(End of clause)

56. RESERVED

57. DFARS 252.223-7006 PROHIBITION ON STORAGE AND DISPOSAL OF TOXIC AND HAZARDOUS MATERIALS (APR 1993)

(a) Definitions. As used in this clause--

(1) "Storage" means a non-transitory, semi-permanent or permanent holding, placement, or leaving of material. It does not include a temporary accumulation of a limited quantity of a material used in or a waste generated or resulting from authorized activities, such as servicing, maintenance, or repair of Department of Defense (DoD) items, equipment, or facilities.

(2) "Toxic or hazardous materials" means:

(i) Materials referred to in section 101(14) of the Comprehensive Environmental Response, Compensation, and Liability Act (CERCLA) of 1980 (42 U.S.C. 9601(14)) and materials designated under section 102 of CERCLA (42 U.S.C. 9602) (40 CFR Part 302);

(ii) Materials that are of an explosive, flammable, or pyrotechnic nature; or

(iii) Materials otherwise identified by the Secretary of Defense as specified in DoD regulations.

(b) In accordance with 10 U.S.C. 2692, the Contractor is prohibited from storing or disposing of non-DoD-owned toxic or hazardous materials on a DoD installation, except to the extent authorized by a statutory exception to 10 U.S.C. 2692 or as authorized by the Secretary of Defense or his designee.

58. *FAR 52.225-9 BUY AMERICAN ACT—CONSTRUCTION MATERIALS (JUNE 2003) (<u>For Contracts less than $6.481 million</u>)

(a) *Definitions*. As used in this clause—

"Component" means an article, material, or supply incorporated directly into a construction material.

"Construction material" means an article, material, or supply brought to the construction site by the Contractor or a subcontractor for incorporation into the building or work. The term also includes an item brought to the site preassembled from articles, materials, or supplies. However, emergency life safety systems, such as emergency lighting, fire alarm, and audio evacuation systems, that are discrete systems incorporated into a public building or work and that are produced as complete systems, are evaluated as a single and distinct construction material regardless of when or how the individual parts or components of those systems are delivered to the construction site. Materials purchased directly by the Government are supplies, not construction material.

"Cost of components" means—

(1) For components purchased by the Contractor, the acquisition cost, including transportation costs to the place of incorporation into the construction material (whether or not such costs are paid to a domestic firm), and any applicable duty (whether or not a duty-free entry certificate is issued); or

(2) For components manufactured by the Contractor, all costs associated with the manufacture of the component, including transportation costs as described in paragraph (1) of this definition, plus allocable overhead costs, but excluding profit. Cost of components does not include any costs associated with the manufacture of the end product.

"Domestic construction material" means—

(1) An unmanufactured construction material mined or produced in the United States; or

(2) A construction material manufactured in the United States, if the cost of its components mined, produced, or manufactured in the United States exceeds 50 percent of the cost of all its components. Components of foreign origin of the same class or kind for which nonavailability determinations have been made are treated as domestic.

"Foreign construction material" means a construction material other than a domestic construction material.

"United States" means the 50 States and the District of Columbia, and outlying areas.

(b) *Domestic preference*. (1) This clause implements the Buy American Act (41 U.S.C. 10a - 10d) by providing a preference for domestic construction material. The Contractor shall use only domestic construction material in performing this contract, except as provided in paragraphs (b)(2) and (b)(3) of this clause.

(2) This requirement does not apply to the construction material or components listed by the Government as follows:

_____

[*Contracting Officer to list applicable excepted materials or indicate "none"*]

(3) The Contracting Officer may add other foreign construction material to the list in paragraph (b)(2) of this clause if the Government determines that—

(i) The cost of domestic construction material would be unreasonable. The cost of a particular domestic construction material subject to the requirements of the Buy American Act is unreasonable when the cost of such material exceeds the cost of foreign material by more than 6 percent;

(ii) The application of the restriction of the Buy American Act to a particular construction material would be impracticable or inconsistent with the public interest; or

(iii) The construction material is not mined, produced, or manufactured in the United States in sufficient and reasonably available commercial quantities of a satisfactory quality.

(c) *Request for determination of inapplicability of the BuyAmerican Act*. (1)(i) Any Contractor request to use foreign construction material in accordance with paragraph (b)(3) of this clause shall include adequate information for Government evaluation of the request, including—

(A) A description of the foreign and domestic construction materials;

(B) Unit of measure;

(C) Quantity;

(D) Price;

(E) Time of delivery or availability;

(F) Location of the construction project;

(G) Name and address of the proposed supplier; and

(H) A detailed justification of the reason for use of foreign construction materials cited in accordance with paragraph (b)(3) of this clause.

(ii) A request based on unreasonable cost shall include a reasonable survey of the market and a completed price comparison table in the format in paragraph (d) of this clause.

(iii) The price of construction material shall include all delivery costs to the construction site and any applicable duty (whether or not a duty-free certificate may be issued).

(iv) Any Contractor request for a determination submitted after contract award shall explain why the Contractor could not reasonably foresee the need for such determination and could not have requested the determination before contract award. If the Contractor does not submit a satisfactory explanation, the Contracting Officer need not make a determination.

(2) If the Government determines after contract award that an exception to the Buy American Act applies and the Contracting Officer and the Contractor negotiate adequate consideration, the Contracting Officer will modify the contract to allow use of the foreign construction material. However, when the basis for the exception is the unreasonable price of a domestic construction material, adequate consideration is not less than the differential established in paragraph (b)(3)(i) of this clause.

(3) Unless the Government determines that an exception to the Buy American Act applies, use of foreign construction material is noncompliant with the Buy American Act.

(d) *Data*. To permit evaluation of requests under paragraph (c) of this clause based on unreasonable cost, the Contractor shall include the following information and any applicable supporting data based on the survey of suppliers:

FOREIGN AND DOMESTIC CONSTRUCTION MATERIALS PRICE COMPARISON			
Construction Material Description	Unit of Measure	Quantity	Price (Dollars)*
Item 1:			

Foreign construction material	_____	_____	_____
Domestic construction material	_____	_____	_____
Item 2:			
Foreign construction material	_____	_____	_____
Domestic construction material	_____	_____	_____

[List *name, address, telephone number, and contact for suppliers surveyed. Attach copy of response; if oral, attach summary.]*
[Include other applicable supporting information.]
[Include all delivery costs to the construction site and any applicable duty (whether or not a duty-free entry certificate is issued).]*

59. *FAR 52.225-10 NOTICE OF BUY AMERICAN ACT REQUIREMENT—CONSTRUCTION MATERIALS (MAY 2002) (Applicable with FAR 52.225-9)

(a) *Definitions*. "Construction material," "domestic construction material," and "foreign construction material," as used in this provision, are defined in the clause of this solicitation entitled "Buy American Act—Construction Materials" (Federal Acquisition Regulation (FAR) clause 52.225-9).

(b) *Requests for determinations of inapplicability*. An offeror requesting a determination regarding the inapplicability of the Buy American Act should submit the request to the Contracting Officer in time to allow a determination before submission of offers. The offeror shall include the information and applicable supporting data required by paragraphs (c) and (d) of the clause at FAR 52.225-9 in the request. If an offeror has not requested a determination regarding the inapplicability of the Buy American Act before submitting its offer, or has not received a response to a previous request, the offeror shall include the information and supporting data in the offer.

(c) *Evaluation of offers*. (1) The Government will evaluate an offer requesting exception to the requirements of the Buy American Act, based on claimed unreasonable cost of domestic construction material, by adding to the offered price the appropriate percentage of the cost of such foreign construction material, as specified in paragraph (b)(3)(i) of the clause at FAR 52.225-9.

(2) If evaluation results in a tie between an offeror that requested the substitution of foreign construction material based on unreasonable cost and an offeror that did not request an exception, the Contracting Officer will award to the offeror that did not request an exception based on unreasonable cost.

(d) *Alternate offers*. (1) When an offer includes foreign construction material not listed by the Government in this solicitation in paragraph (b)(2) of the clause at FAR 52.225-9, the offeror also may submit an alternate offer based on use of equivalent domestic construction material.

(2) If an alternate offer is submitted, the offeror shall submit a separate Standard Form 1442 for the alternate offer, and a separate price comparison table prepared in accordance with paragraphs (c) and (d) of the clause at FAR 52.225-9 for the offer that is based on the use of any foreign construction material for which the Government has not yet determined an exception applies.

(3) If the Government determines that a particular exception requested in accordance with paragraph (c) of the clause at FAR 52.225-9 does not apply, the Government will evaluate only those offers based on use of the equivalent domestic construction material, and the offeror shall be required to furnish such domestic construction material. An offer based on use of the foreign construction material for which an exception was requested—

(i) Will be rejected as nonresponsive if this acquisition is conducted by sealed bidding; or
(ii) May be accepted if revised during negotiations.

(End of provision)

60. *FAR 52.225-11 BUY AMERICAN ACT—CONSTRUCTION MATERIALS UNDER TRADE AGREEMENTS (JUNE 2003) [For Contracts more than $6,481,000] ALTERNATE I (MAY 2002) [<u>For Contracts between $6.481 and 7.304733 Million</u>]

(a) *Definitions*. As used in this clause—

"Component" means an article, material, or supply incorporated directly into a construction material.

"Construction material" means an article, material, or supply brought to the construction site by the Contractor or subcontractor for incorporation into the building or work. The term also includes an item brought to the site preassembled from articles, materials, or supplies. However, emergency life safety systems, such as emergency lighting, fire alarm, and audio evacuation systems, that are discrete systems incorporated into a public building or work and that are produced as complete systems, are evaluated as a single and distinct construction material regardless of when or how the individual parts or components of those systems are delivered to the construction site. Materials purchased directly by the Government are supplies, not construction material.

"Cost of components" means—

(1) For components purchased by the Contractor, the acquisition cost, including transportation costs to the place of incorporation into the construction material (whether or not such costs are paid to a domestic firm), and any applicable duty (whether or not a duty-free entry certificate is issued); or

(2) For componentsmanufactured by the Contractor, all costs associated with the manufacture of the component, including transportation costs as described in paragraph (1) of this definition, plus allocable overhead costs, but excluding profit. Cost of components does not include any costs associated with the manufacture of the end product.

"Designated country" means any of the following countries:

Aruba	Kiribati
Austria	Korea, Republic of
Bangladesh	Lesotho
Belgium	Liechtenstein
Benin	Luxembourg
Bhutan	Malawi
Botswana	Maldives
Burkina Faso	Mali
Burundi	Mozambique
Canada	Nepal
Cape Verde	Netherlands
Central African Republic	Niger
Chad	Norway
Comoros	Portugal
Denmark	Rwanda
Djibouti	Sao Tome and Principe
Equatorial Guinea	Sierra Leone
Finland	Singapore
France	Somalia
Gambia	Spain
Germany	Sweden
Greece	Switzerland
Guinea	Tanzania U.R.
Guinea-Bissau	Togo
Haiti	Tuvalu
Hong Kong	Uganda
Iceland	United Kingdom
Ireland	Vanuatu
Israel	Western Samoa
Italy	Yemen
Japan	

"Designated country construction material" means a construction material that—

(1) Is wholly the growth, product, or manufacture of a designated country; or

(2) In the case of a construction material that consists in whole or in part of materials from another

country, has been substantially transformed in a designated country into a new and different construction material distinct from the materials from which it was transformed.

"Domestic construction material" means—

(1) An unmanufactured construction material mined or produced in the United States; or

(2) A construction material manufactured in the United States, if the cost of its components mined, produced, or manufactured in the United States exceeds 50 percent of the cost of all its components. Components of foreign origin of the same class or kind for which nonavailability determinations have been made are treated as domestic.

"Foreign construction material" means a construction material other than a domestic construction material.

"North American Free Trade Agreement country" means Canada or Mexico.

"North American Free Trade Agreement country construction material" means a construction material that—

(1) Is wholly the growth, product, or manufacture of a North American Free Trade Agreement (NAFTA) country; or

(2) In the case of a construction material that consists in whole or in part of materials from another country, has been substantially transformed in a NAFTA country into a new and different construction material distinct from the materials from which it was transformed.

"United States" means the 50 States and the District of Columbia, and outlying areas.

(b) *Construction materials*. (1) This clause implements the Buy American Act (41 U.S.C. 10a - 10d) by providing a preference for domestic construction material. In addition, the Contracting Officer has determined that the Trade Agreements Act and the North American Free Trade Agreement (NAFTA) apply to this acquisition. Therefore, the Buy American Act restrictions are waived for designated country and NAFTA country construction materials.

(2) The Contractor shall use only domestic, designated country, or NAFTA country construction material in performing this contract, except as provided in paragraphs (b)(3) and (b)(4) of this clause.

(3) The requirement in paragraph (b)(2) of this clause does not apply to the construction materials or components listed by the Government as follows:

_____

[*Contracting Officer to list applicable excepted materials or indicate "none"*]

(4) The Contracting Officer may add other foreign construction material to the list in paragraph (b)(3) of this clause if the Government determines that—

(i) The cost of domestic construction material would be unreasonable. The cost of a particular domestic construction material subject to the restrictions of the Buy American Act is unreasonable when the cost of such material exceeds the cost of foreign material by more than 6 percent;

(ii) The application of the restriction of the Buy American Act to a particular construction material would be impracticable or inconsistent with the public interest; or

(iii) The construction material is not mined, produced, or manufactured in the United States in sufficient and reasonably available commercial quantities of a satisfactory quality.

(c) *Request for determination of inapplicability of the Buy American Act*. (1)(i) Any Contractor request to use foreign construction material in accordance with paragraph (b)(4) of this clause shall include adequate information for Government evaluation of the request, including—

(A) A description of the foreign and domestic construction materials;

(B) Unit of measure;

(C) Quantity;

(D) Price;

(E) Time of delivery or availability;

(F) Location of the construction project;

(G) Name and address of the proposed supplier; and

(H) A detailed justification of the reason for use of foreign construction materials cited in accordance with paragraph (b)(3) of this clause.

(ii) A request based on unreasonable cost shall include a reasonable survey of the market and a completed price comparison table in the format in paragraph (d) of this clause.

(iii) The price of construction material shall include all delivery costs to the construction

site and any applicable duty (whether or not a duty-free certificate may be issued).

(iv) Any Contractor request for a determination submitted after contract award shall explain why the Contractor could not reasonably foresee the need for such determination and could not have requested the determination before contract award. If the Contractor does not submit a satisfactory explanation, the Contracting Officer need not make a determination.

(2) If the Government determines after contract award that an exception to the Buy American Act applies and the Contracting Officer and the Contractor negotiate adequate consideration, the Contracting Officer will modify the contract to allow use of the foreign construction material. However, when the basis for the exception is the unreasonable price of a domestic construction material, adequate consideration is not less than the differential established in paragraph (b)(4)(i) of this clause.

(3) Unless the Government determines that an exception to the Buy American Act applies, use of foreign construction material is noncompliant with the Buy American Act.

(d) *Data*. To permit evaluation of requests under paragraph (c) of this clause based on unreasonable cost, the Contractor shall include the following information and any applicable supporting data based on the survey of suppliers:

FOREIGN AND DOMESTIC CONSTRUCTION MATERIALS PRICE COMPARISON			
Construction Material Description	Unit of Measure	Quantity	Price (Dollars)*
Item 1:			
Foreign construction material	_____	_____	_____
Domestic construction material	_____	_____	_____
Item 2:			
Foreign construction material	_____	_____	_____
Domestic construction material	_____	_____	_____

[List *name, address, telephone number, and contact for suppliers surveyed. Attach copy of response; if oral, attach summary.]*
[Include other applicable supporting information.]
[Include all delivery costs to the construction site and any applicable duty (whether or not a duty-free entry certificate is issued).]*

(End of clause)

Alternate I (May 2002). As prescribed in 25.1102(c)(3), delete the definitions of "North American Free Trade Agreement country" and "North American Free Trade Agreement country construction material" from the definitions in paragraph (a) of the basic clause and substitute the following paragraphs (b)(1) and (b)(2) for paragraphs (b)(1) and (b)(2) of the basic clause:

(b) *Construction materials*. (1) This clause implements the Buy American Act (41 U.S.C. 10a - 10d) by providing a preference for domestic construction material. In addition, the Contracting Officer has determined that the Trade Agreements Act applies to this acquisition. Therefore, the Buy American Act restrictions are waived for designated country construction materials.

(2) The Contractor shall use only domestic or designated country construction material in performing this contract, except as provided in paragraphs (b)(3) and (b)(4) of this clause.

61. *FAR 52.225-12 NOTICE OF BUY AMERICAN ACT REQUIREMENT—CONSTRUCTION MATERIALS UNDER TRADE AGREEMENTS (MAY 2002) [Applicable with FAR 52.225-11] ALTERNATE II (MAY 2002) [For Contracts Between 6.481 and 7.344733 Million]

(a) *Definitions.* "Construction material," "designated country construction material," "domestic

construction material," "foreign construction material," and "NAFTA country construction material," as used in this provision, are defined in the clause of this solicitation entitled "Buy American Act—
Construction Materials under Trade Agreements" (Federal Acquisition Regulation (FAR) clause 52.225-11).

(b) *Requests for determination of inapplicability*. An offeror requesting a determination regarding the inapplicability of the Buy American Act should submit the request to the Contracting Officer in time to allow a determination before submission of offers. The offeror shall include the information and applicable supporting data required by paragraphs (c) and (d) of FAR clause 52.225-11 in the request. If an offeror has not requested a determination regarding the inapplicability of the Buy American Act before submitting its offer, or has not received a response to a previous request, the offeror shall include the information and supporting data in the offer.

(c) *Evaluation of offers*. (1) The Government will evaluate an offer requesting exception to the requirements of the Buy American Act, based on claimed unreasonable cost of domestic construction materials, by adding to the offered price the appropriate percentage of the cost of such foreign construction material, as specified in paragraph (b)(4)(i) of FAR clause 52.225-11.

(2) If evaluation results in a tie between an offeror that requested the substitution of foreign construction material based on unreasonable cost and an offeror that did not request an exception, the Contracting Officer will award to the offeror that did not request an exception based on unreasonable cost.

(d) *Alternate offers*. (1) When an offer includes foreign construction material, other than designated country or NAFTA country construction material, that is not listed by the Government in this solicitation in paragraph (b)(3) of FAR clause 52.225-11, the offeror also may submit an alternate offer based on use of equivalent domestic, designated country, or NAFTA country construction material.

(2) If an alternate offer is submitted, the offeror shall submit a separate Standard Form 1442 for the alternate offer, and a separate price comparison table prepared in accordance with paragraphs (c) and (d) of FAR clause 52.225-11 for the offer that is based on the use of any foreign construction material for which the Government has not yet determined an exception applies.

(3) If the Government determines that a particular exception requested in accordance with paragraph (c) of FAR clause 52.225-11 does not apply, the Government will evaluate only those offers based on use of the equivalent domestic, designated country, or NAFTA country construction material, and the offeror shall be required to furnish such domestic, designated country, or NAFTA country construction material. An offer based on use of the foreign construction material for which an exception was requested—

(i) Will be rejected as nonresponsive if this acquisition is conducted by sealed bidding; or

(ii) May be accepted if revised during negotiations.

(End of provision)

ALTERNATE II (MAY 2002) **[For Contracts between 6.481 and 7.304733 Million]**
As prescribed in 25.1102(d)(3), substitute the following paragraphs (a) and (d) for paragraphs (a) and (d) of the basic provision:

(a) *Definitions*. "Construction material," "designated country construction material," "domestic construction material," and "foreign construction material," as used in this provision, are defined in the clause of this solicitation entitled "Buy American Act—Construction Materials under Trade Agreements" (Federal Acquisition Regulation (FAR) clause 52.225-11).

(d) *Alternate offers*. (1) When an offer includes foreign construction material, other than designated country construction material, that is not listed by the Government in this solicitation in paragraph (b)(3) of FAR clause 52.225-11, the offeror also may submit an alternate offer based on use of equivalent domestic or designated country construction material.

(2) If an alternate offer is submitted, the offeror shall submit a separate Standard Form 1442 for the alternate offer, and a separate price comparison table prepared in accordance with paragraphs (c) and (d) of FAR clause 52.225-11 for the offer that is based on the use of any foreign construction material for which the Government has not yet determined an exception applies.

(3) If the Government determines that a particular exception requested in accordance with paragraph (c) of FAR clause 52.225-11 does not apply, the Government will evaluate only those offers based on use of the equivalent domestic or designated country construction material, and the offeror shall be required to furnish such domestic or designated country construction material. An offer based on use of the foreign construction material for which an exception was requested—

(i) Will be rejected as nonresponsive if this acquisition is conducted by sealed bidding; or
(ii) May be accepted if revised during negotiations.

62. *FAR 52.225-13 RESTRICTIONS ON CERTAIN FOREIGN PURCHASES (OCT 2003)

(a) Except as authorized by the Office of Foreign Assets Control (OFAC) in the Department of the Treasury, the Contractor shall not acquire, for use in the performance of this contract, any supplies or services if any proclamation, Executive order, or statute administered by OFAC, or if OFAC's implementing regulations at 31 CFR chapter V, would prohibit such a transaction by a person subject to the jurisdiction of the United States.

(b) Except as authorized by OFAC, most transactions involving Cuba, Iran, Libya, and Sudan are prohibited, as are most imports from North Korea, into the United States or its outlying areas. Lists of entities and individuals subject to economic sanctions are included in OFAC's List of Specially Designated Nationals and Blocked Persons at *http://www.epls.gov/Terlist1.html*. More information about these restrictions, as well as updates, is available in the OFAC's regulations at 31 CFR chapter V and/or on OFAC's website at *http://www.treas.gov/ofac*.

(c) The Contractor shall insert this clause, including this paragraph (c), in all subcontracts.
(End of clause)

63. DFARS 252.226-7001 UTILIZATION OF INDIAN ORGANIZATIONS, INDIAN-OWNED ECONOMIC ENTERPRISES, AND NATIVE HAWAIIAN SMALL BUSINESS CONCERNS (OCT 2003)

(a) *Definitions.* As used in this clause--

"Indian" means any person who is a member of any Indian tribe, band, group, pueblo, or community that is recognized by the Federal Government as eligible for services from the Bureau of Indian Affairs (BIA) in accordance with 25 U.S.C. 1452(c) and any "Native" as defined in the Alaska Native Claims Settlement Act (43 U.S.C. 1601).

"Indian organization" means the governing body of any Indian tribe or entity established or recognized by the governing body of an Indian tribe for the purposes of 25 U.S.C. Chapter 17.

"Indian-owned economic enterprise" means any Indian-owned (as determined by the Secretary of the Interior) commercial, industrial, or business activity established or organized for the purpose of profit, provided that Indian ownership constitutes not less than 51 percent of the enterprise.

"Indian tribe" means any Indian tribe, band, group, pueblo, or community, including native villages and native groups (including corporations organized by Kenai, Juneau, Sitka, and Kodiak) as defined in the Alaska Native Claims Settlement Act, that is recognized by the Federal Government as eligible for services from BIA in accordance with 25 U.S.C. 1452(c).

"Interested party" means a contractor or an actual or prospective offeror whose direct economic interest would be affected by the award of a subcontract or by the failure to award a subcontract.

"Native Hawaiian small business concern" means an entity that is-

(1) A small business concern as defined in Section 3 of the Small Business Act (15 U.S.C. 632) and relevant implementing regulations; and

(2) Owned and controlled by a Native Hawaiian as defined in 25 U.S.C. 4221(9).

(b) The Contractor shall use its best efforts to give Indian organizations, Indian-owned economic enterprises, and Native Hawaiian small business concerns the maximum practicable opportunity to participate in the subcontracts it awards, to the fullest extent consistent with efficient performance of the contract.

(c) The Contracting Officer and the Contractor, acting in good faith, may rely on the representation of an Indian organization, Indian-owned economic enterprise, or Native Hawaiian small business concern as to its eligibility, unless an interested party challenges its status or the Contracting Officer has independent reason to question that status.

(d) In the event of a challenge to the representation of a subcontractor, the Contracting Officer will refer the

matter to-

(1) For matters relating to Indian organizations or Indian-owned economic enterprises:

U.S. Department of the Interior
Bureau of Indian Affairs
Attn: Chief, Division of Contracting and
Grants Administration
1849 C Street NW, MS-2626-MIB
Washington, DC 20240-4000.

The BIA will determine the eligibility and will notify the Contracting Officer.

(2) For matters relating to Native Hawaiian small business concerns:

Department of Hawaiian Home Lands
PO Box 1879
Honolulu, HI 96805.

The Department of Hawaiian Home Lands will determine the eligibility and will notify the Contracting Officer.

(e) No incentive payment will be made-

(1) While a challenge is pending; or
(2) If a subcontractor is determined to be an ineligible participant.

(f)(1) The Contractor, on its own behalf or on behalf of a subcontractor at any tier, may request an incentive payment in accordance with this clause.

(2) The incentive amount that may be requested is 5 percent of the estimated cost, target cost, or fixed price included in the subcontract at the time of award to the Indian organization, Indian-owned economic enterprise, or Native Hawaiian small business concern.

(3) In the case of a subcontract for commercial items, the Contractor may receive an incentive payment only if the subcontracted items are produced or manufactured in whole or in part by an Indian organization, Indian-owned economic enterprise, or Native Hawaiian small business concern.

(4) The Contractor has the burden of proving the amount claimed and shall assert its request for an incentive payment prior to completion of contract performance.

(5) The Contracting Officer, subject to the terms and conditions of the contract and the availability of funds, will authorize an incentive payment of 5 percent of the estimated cost, target cost, or fixed price included in the subcontract awarded to the Indian organization, Indian-owned economic enterprise, or Native Hawaiian small business concern.

(6) If the Contractor requests and receives an incentive payment on behalf of a subcontractor, the Contractor is obligated to pay the subcontractor the incentive amount.

(g) The Contractor shall insert the substance of this clause, including this paragraph (g), in all subcontracts exceeding $500,000 for which further subcontracting opportunities may exist.
(End of clause)

64. *FAR 52.227-1 AUTHORIZATION AND CONSENT (JUL 1995)

(a) The Government authorizes and consents to all use and manufacture, in performing this contract or any subcontract at any tier, of any invention described in and covered by a United States patent

(1) embodied in the structure or composition of any article the delivery of which is accepted by the Government under this contract or

(2) used in machinery, tools, or methods whose use necessarily results from compliance by the Contractor or a subcontractor with

(i) specifications or written provisions forming a part of this contract or

(ii) specific written instructions given by the Contracting Officer directing the manner of performance. The entire liability to the Government for infringement of a patent of the United States shall be determined solely by the provisions of the indemnity clause, if any, included in this contract or any subcontract hereunder (including any lower-tier subcontract), and the Government assumes liability for all other infringement to the extent of the authorization and consent hereinabove granted.

(b) The Contractor agrees to include, and require inclusion of, this clause, suitably modified to identify the parties, in all subcontracts at any tier for supplies or services (including construction, architect-engineer services, and materials, supplies, models, samples, and design or testing services expected to exceed the simplified acquisition threshold) however, omission of this clause from any subcontract, including those at or below the simplified acquisition threshold, does not affect this authorization and consent.

65. *FAR 52.227-2 NOTICE AND ASSISTANCE REGARDING PATENT AND COPYRIGHT INFRINGEMENT (AUG 1996)

(a) The Contractor shall report to the Contracting Officer, promptly and in reasonable written detail, each notice or claim of patent or copy-right infringement based on the performance of this contract of which the Contractor has knowledge.

(b) In the event of any claim or suit against the Government on account of any alleged patent or copyright infringement arising out of the performance of this contract or out of the use of any supplies furnished or work or services performed under this contract, the Contractor shall furnish to the Government, when requested by the Contracting Officer, all evidence and information in possession of the Contractor pertaining to such suit or claim. Such evidence and information shall be furnished at the expense of the Government except where the Contractor has agreed to indemnify the Government.

(c) The Contractor agrees to include, and require inclusion of, this clause in all subcontracts at any tier for supplies or services (including construction and architect-engineer subcontracts and those for material, supplies, models, samples, or design or testing services) expected to exceed the simplified acquisition threshold at FAR 2.101.

66. *FAR 52.227-4 PATENT INDEMNITY--CONSTRUCTION CONTRACTS (APR 1984)

Except as otherwise provided, the Contractor agrees to indemnify the Government and its officers, agents, and employees against liability, including costs and expenses, for infringement upon any United States patent (except a patent issued upon an application that is now or may hereafter be withheld from issue pursuant to a Secrecy Order under 35 U.S.C. 181) arising out of performing this contract or out of the use or disposal by or for the account of the Government of supplies furnished or work performed under this contract.

67. DFARS 252.227-7033 RIGHTS IN SHOP DRAWINGS (APR 1966)

(a) Shop drawings for construction means drawings, submitted to the Government by the Construction Contractor, subcontractor or any lower-tier subcontractor pursuant to a construction contract, showing in detail

(i) the proposed fabrication and assembly of structural elements and (ii) the installation (i.e., form, fit, and attachment details) of materials or equipment. The Government may duplicate, use, and disclose in any manner and for any purpose shop drawings delivered under this contract.

(b) This clause, including this paragraph (b), shall be included in all subcontracts hereunder at any tier.

68. FAR 52.228-1 BID GUARANTEE (SEP 1996) [NOTE: Not required for projects less than $100,000]

(a) Failure to furnish a bid guarantee in the proper form and amount, by the time set for opening of bids, may be cause for rejection of bids.

(b) The bidder shall furnish a bid guarantee in the form of a firm commitment, e.g., bid bond supported by good and sufficient surety or sureties acceptable to the Government, postal money order, certified check, cashier's check, irrevocable letter of credit, or, under Treasury Department regulations, certain bonds or notes of the United States. The Contracting Officer will return bid guarantees, other than bid bonds, (1) to unsuccessful bidders as soon as practicable after the opening of bids; and (2) to the successful bidder upon execution of contractual documents and bonds (including any necessary coinsurance or reinsurance agreements), as required by the bid as accepted.

(c) The amount of the bid guarantee shall be twenty (20%) of the bid price or Three Million Dollars ($3,000,000), whichever is less.

(d) If the successful bidder, upon acceptance of its bid by the Government within the period specified for acceptance, fails to execute all contractual documents or furnish executed bond(s) within 10 days after receipt of the forms by the bidder, the Contracting Officer may terminate the contract for default.

(e) In the event the contract is terminated for default, the bidder is liable for any cost of acquiring the work that exceeds the amount of its bid and the bid guarantee is available to offset the difference.

69. *FAR 52.228-2 ADDITIONAL BOND SECURITY (OCT 1997)

The Contractor shall promptly furnish additional security required to protect the Government and persons supplying labor or materials under this contract if--

(a) Any surety upon any bond, or issuing financial institution for other security, furnished with this contract becomes unacceptable to the Government;

(b) Any surety fails to furnish reports on its financial condition as required by the Government;

(c) The contract price is increased so that the penal sum of any bond becomes inadequate in the opinion of the Contracting Officer; or

(d) An irrevocable letter of credit (ILC) used as security will expire before the end of the period of required security. If the Contractor does not furnish an acceptable extension or replacement ILC, or other acceptable substitute, at least 30 days before an ILC's scheduled expiration, the Contracting Officer has the right to immediately draw on the ILC.

70. *FAR 52.228-5 INSURANCE--WORK ON A GOVERNMENT INSTALLATION (JAN 1997) [<u>For Contracts Exceeding $100,000</u>]

(a) The Contractor shall, at its own expense, provide and maintain during the entire performance of this contract, at least the kinds and minimum amounts of insurance required in the Schedule or elsewhere in the contract.

(b) Before commencing work under this contract, the Contractor shall notify the Contracting Officer in writing that the required insurance has been obtained. The policies evidencing required insurance shall contain an endorsement to the effect that any cancellation or any material change adversely affecting the Government's interest shall not be effective

(1) for such period as the laws of the State in which this contract is to be performed prescribe, or

(2) until 30 days after the insurer or the Contractor gives written notice to the Contracting Officer, whichever period is longer.

(c) The Contractor shall insert the substance of this clause, including this paragraph (c), in subcontracts under this contract that require work on a Government installation and shall require subcontractors to provide and maintain the insurance required in the Schedule or elsewhere in the contract. The Contractor shall maintain a copy of all subcontractors' proofs of required insurance, and shall make copies available to the Contracting Officer upon request.

71. *FAR 52.228-11 PLEDGES OF ASSETS (FEB 1992)

(a) Offerors shall obtain from each person acting as an individual surety on a bid guarantee, a performance bond, or a payment bond--

(1) Pledge of assets; and

(2) Standard Form 28, Affidavit of Individual Surety.

(b) Pledges of assets from each person acting as an individual surety shall be in the form of--

(1) Evidence of an escrow account containing cash, certificates of deposit, commercial or Government securities, or other assets described in FAR 28.203-2 (except see 28.203-2(b)(2) with respect to Government securities held in book entry form) and/or;

(2) A recorded lien on real estate. The offeror will be required to provide--

(i) Evidence of title in the form of a certificate of title prepared by a title insurance company approved by the United States Department of Justice. This title evidence must show fee simple title vested in the surety along with any concurrent owners; whether any real estate taxes are due and payable; and any recorded encumbrances against the property, including the lien filed in favor of the Government as required by FAR 28.203-3(d);

(ii) Evidence of the amount due under any encumbrance shown in the evidence of title;

(iii) A copy of the current real estate tax assessment of the property or a current appraisal dated no earlier than 6 months prior to the date of the bond, prepared by a professional appraiser who certifies that the appraisal has been conducted in accordance with the generally accepted appraisal standards as reflected in the Uniform Standards of Professional Appraisal Practice, as promulgated by the Appraisal Foundation.

72. *FAR 52.228-12 PROSPECTIVE SUBCONTRACTOR REQUESTS FOR BONDS (OCT 1995)

In accordance with Section 806(a)(3) of Public Law 102-190, as amended by Sections 2091 and 8105 of Pub. L. 103-355, upon the request of a prospective subcontractor or supplier offering to furnish labor or material for the performance of this contract for which a payment bond has been furnished to the Government pursuant to the Miller Act, the Contractor shall promptly provide a copy of such payment bond to the requestor.

73. FAR 52.228-13 ALTERNATIVE PAYMENT PROTECTIONS (JULY 2000) [Applicable only for projects or delivery orders less than $100,000]

(a) The Contractor shall submit one of the following payment protections:

(1) A payment bond.

(2) An irrevocable letter of credit from a federally insured financial institution.

(b) The amount of the payment protection shall be 100 percent of the contract price.

(c) The submission of the payment protection is required within 10 days of contract award.

(d) The payment protection shall provide protection for the full contract performance period plus a one-year period.

(e) Except for escrow agreements and payment bonds, which provide their own protection procedures, the Contracting Officer is authorized to access funds under the payment protection when it has been alleged in writing by a supplier of labor or material that a nonpayment has occurred, and to withhold funds pending resolution by administrative or judicial proceedings or mutual agreement of the parties.

(f) When a tripartite escrow agreement is used, the Contractor shall utilize only suppliers of labor and material that signed the escrow agreement.

74. FAR 52.228-14 IRREVOCABLE LETTER OF CREDIT (DEC 1999)

(a) "Irrevocable letter of credit" (ILC), as used in this clause, means a written commitment by a federally insured financial institution to pay all or part of a stated amount of money, until the expiration date of the letter, upon presentation by the Government (the beneficiary) of a written demand therefor. Neither the financial institution nor the offeror/Contractor can revoke or condition the letter of credit.

(b) If the offeror intends to use an ILC in lieu of a bid bond, or to secure other types of bonds such as performance and payment bonds, the letter of credit and letter of confirmation formats in paragraphs (e) and (f) of this clause shall be used.

(c) The letter of credit shall be irrevocable, shall require presentation of no document other than a written demand and the ILC (including confirming letter, if any), shall be issued/confirmed by an acceptable federally insured financial institution as provided in paragraph (d) of this clause, and--

(1) If used as a bid guarantee, the ILC shall expire no earlier than 60 days after the close of the bid acceptance period;

(2) If used as an alternative to corporate or individual sureties as security for a performance or payment bond, the offeror/Contractor may submit an ILC to cover the entire period of performance or may submit an ILC with an initial expiration date estimated to cover the entire period for which financial security is required or may submit an ILC with an initial expiration that is a minimum period of one year from the date of issuance. The ILC shall provide that, unless the issuer provides the beneficiary written notice of non-renewal of least 60 days in advance of the current expiration date, the ILC is automatically extended without amendment for one year from the expiration date, or any future expiration date, until the period of required coverage is completed and the Contracting Officer provides the financial institution with a written statement waiving the right to payment. The period of required coverage shall be:

(i) For contracts subject to the Miller Act, the later of--

(A) One year following the expected date of final payment;

(B) For performance bonds only, until completion of any warranty period; or

(C) For payment bonds only, until resolution of all claims filed against the payment bond during the one-year period following final payment.

(ii) For contracts not subject to the Miller Act, the later of--

(A) 90 days following final payment; or

(B) For performance bonds only, until completion of any warranty period.

(d) Only federally insured financial institution rated investment grade or higher shall issue or confirm the ILC. The offeror/Contractor shall provide the Contracting Officer a credit rating that indicates the financial institution has the required rating(s) as of the date of issuance of the ILC. Unless the financial institution issuing the ILC had letter of credit business of at least $25 million in the past year, ILCs over $5 million must be confirmed by another acceptable financial institution that had letter of credit business of at least $25 million in the past year.

(e) The following format shall be used by the issuing financial institution to create an ILC:

[Issuing Financial Institution's Letterhead or Name and Address]

Issue Date----------

Irrevocable Letter of Credit No.----------
Account party's name----------
Account party's address----------
For Solicitation No.----------
(For reference only)
TO: [U.S. Government agency]
[U.S. Government agency's address]

1. We hereby establish this irrevocable and transferable Letter of Credit in your favor for one or more drawings up to United States $_____. This Letter of Credit is payable at [issuing financial institution's and, if any, confirming financial institution's] office at [issuing financial institution's address and, if any, confirming financial institution's address] and expires with our close of business on _____, or any automatically extended expiration date.

2. We hereby undertake to honor your or transferee's sight draft(s) drawn on issuing or, if any, the confirming financial institution, for all or any part of this credit if presented with this Letter of Credit and confirmation, if any, at the office specified in paragraph 1 of this Letter of Credit on or before the expiration date or any automatically extended expiration date.

3. [This paragraph is omitted if used as a bid guarantee, and subsequent paragraphs are renumbered.] It is a condition of this Letter of Credit that it is deemed to be automatically extended without amendment for one year from the expiration date hereof, or any future expiration date, unless at least 60 days prior to any expiration date, we notify you or the transferee by registered mail, or other receipted means of delivery, that we elect not to consider this Letter of Credit renewed for any such additional period. At the time we notify you, we also agree to notify the account party (and confirming financial institution, if any) by the same means of delivery.

4. This Letter of Credit is transferable. Transfers and assignments of proceeds are to be effected without charge to either the beneficiary or the transferee/assignee of proceeds. Such transfer or assignment shall be only at the written direction of the Government (the beneficiary) in a form satisfactory to the issuing financial institution and the confirming financial institution, if any.

5. This Letter of Credit is subject to the Uniform Customs and Practice (UCP) for Documentary Credits, 1993 Revision, International Chamber of Commerce Publication No. 500, and to the extent not inconsistent therewith, to the laws of _____ [state of confirming financial institution, if any, otherwise state of issuing financial institution].

6. If this credit expires during an interruption of business of this financial institution as described in Article 17 of the UCP, the financial institution specifically agrees to effect payment if this credit is drawn against within 30 days after the resumption of our business.

Sincerely,

[Issuing financial institution]

(f) The following format shall be used by the financial institution to confirm an ILC:

[Confirming Financial Institution's Letterhead or Name and Address]---

(Date) _____

Our Letter of Credit
Advice Number----------
Beneficiary:----------
[U.S. Government agency]
Issuing Financial Institution:----------
Issuing Financial Institution's LC No.:----------

Gentlemen:

1. We hereby confirm the above indicated Letter of Credit, the original of which is attached, issued by _____ [name of issuing financial institution] for drawings of up to United States dollars _____/U.S. $_____ and expiring with our close of business on _____ [the expiration date], or any automatically extended expiration date.

2. Draft(s) drawn under the Letter of Credit and this Confirmation are payable at our office located at _____.

3. We hereby undertake to honor sight draft(s) drawn under and presented with the Letter of Credit and this Confirmation at our offices as specified herein.

4. [This paragraph is omitted if used as a bid guarantee, and subsequent paragraphs are renumbered.] It is a condition of this confirmation that it be deemed automatically extended without amendment for one year from the expiration date hereof, or any automatically extended expiration date, unless:

(a) At least 60 days prior to any such expiration date, we shall notify the Contracting Officer, or the transferee and the issuing financial institution, by registered mail or other receipted means of delivery, that we elect not to consider this confirmation extended for any such additional period; or

(b) The issuing financial institution shall have exercised its right to notify you or the transferee, the account party, and ourselves, of its election not to extend the expiration date of the Letter of Credit.

5. This confirmation is subject to the Uniform Customs and Practice (UCP) for Documentary Credits, 1993 Revision, International Chamber of Commerce Publication No. 500, and to the extent not inconsistent therewith, to the laws of _____ [state of confirming financial institution].

6. If this confirmation expires during an interruption of business of this financial institution as described in Article 17 of the UCP, we specifically agree to effect payment if this credit is drawn against within 30 days after the resumption of our business.

Sincerely,

[Confirming financial institution]

(g) The following format shall be used by the Contracting Officer for a sight draft to draw on the Letter of Credit:

SIGHT DRAFT

[City, State]

(Date) _____

[Name and address of financial institution]

Pay to the order of----------

[Beneficiary Agency] _____

the sum of United States $ _____

This draft is drawn under----------

Irrevocable Letter of Credit No.----------

[Beneficiary Agency]

By: _____

75. FAR 52.228-15 PERFORMANCE AND PAYMENT BONDS (JULY 2000).

[This provision is Not Required for projects less than $100,000. See Clauses "Alternate Payment Protections" and "Inapplicable Provisions and Clauses".]

(a) *Definitions*. As used in this clause—

"Original contract price" means the award price of the contract; or, for requirements contracts, the price payable for the estimated total quantity; or, for indefinite-quantity contracts, the price payable for the specified minimum quantity. Original contract price does not include the price of any options, except those options exercised at the time of contract award.

(b) *Amount of required bonds*. Unless the resulting contract price is $100,000 or less, the successful offeror shall furnish performance and payment bonds to the Contracting Officer as follows:

(1) *Performance bonds (Standard Form 25).* The penal amount of performance bonds at the time of contract award shall be 100 percent of the original contract price.

(2) *Payment Bonds (Standard Form 25-A).* The penal amount of payment bonds at the time of contract award shall be 100 percent of the original contract price.

(3) *Additional bond protection*. (i) The Government may require additional performance and

payment bond protection if the contract price is increased. The increase in protection generally will equal 100 percent of the increase in contract price.

(ii) The Government may secure the additional protection by directing the Contractor to increase the penal amount of the existing bond or to obtain an additional bond.

(c) *Furnishing executed bonds*. The Contractor shall furnish all executed bonds, including any necessary reinsurance agreements, to the Contracting Officer, within the time period specified in the Bid Guarantee provision of the solicitation, or otherwise specified by the Contracting Officer, but in any event, before starting work.

(d) *Surety or other security for bonds*. The bonds shall be in the form of firm commitment, supported by corporate sureties whose names appear on the list contained in Treasury Department Circular 570, individual sureties, or by other acceptable security such as postal money order, certified check, cashier's check, irrevocable letter of credit, or, in accordance with Treasury Department regulations, certain bonds or notes of the United States. Treasury Circular 570 is published in the Federal Register or may be obtained from the:

U.S. Department of Treasury
Financial Management Service
Surety Bond Branch
401 14th Street, NW, 2nd Floor, West Wing
Washington, DC 20227.

(e) *Notice of subcontractor waiver of protection (40 U.S.C. 270b(c).* Any waiver of the right to sue on the payment bond is void unless it is in writing, signed by the person whose right is waived, and executed after such person has first furnished labor or material for use in the performance of the contract.
(End of clause)

76. FAR 52.229-3 FEDERAL, STATE, AND LOCAL TAXES (APR 2003) [<u>For Contracts Exceeding $100,000</u>]

(a) As used in this clause--

"All applicable Federal, State, and local taxes and duties," means all taxes and duties, in effect on the contract date, that the taxing authority is imposing and collecting on the transactions or property covered by this contract.

"After-imposed Federal tax," as used in this clause, means any new or increased Federal excise tax or duty, or tax that was exempted or excluded on the contract date but whose exemption was later revoked or reduced during the contract period, on the transactions or property covered by this contract that the Contractor is required to pay or bear as the result of legislative, judicial, or administrative action taking effect after the contract date. It does not include social security tax or other employment taxes.

"After-relieved Federal tax," means any amount of Federal excise tax or duty, except social security or other employment taxes, that would otherwise have been payable on the transactions or property covered by this contract, but which the Contractor is not required to pay or bear, or for which the Contractor obtains a refund or drawback, as the result of legislative, judicial, or administrative action taking effect after the contract date.

"Contract date," means the date set for bid opening or, if this is a negotiated contract or a modification, the effective date of this contract or modification.

"Local taxes" includes taxes imposed by a possession or territory of the United States, Puerto Rico, or the Northern Mariana Islands, if the contract is performed wholly or partly in any of those areas.

(b) The contract price includes all applicable Federal, State, and local taxes and duties.

(c) The contract price shall be increased by the amount of any after-imposed Federal tax, provided the Contractor warrants in writing that no amount for such newly imposed Federal excise tax or duty or rate increase was included in the contract price, as a contingency reserve or otherwise.

(d) The contract price shall be decreased by the amount of any after-relieved Federal tax.

(e) The contract price shall be decreased by the amount of any Federal excise tax or duty, except social security or other employment taxes, that the Contractor is required to pay or bear, or does not obtain a refund of, through the Contractor's fault, negligence, or failure to follow instructions of the Contracting Officer.

(f) No adjustment shall be made in the contract price under this clause unless the amount of the adjustment exceeds $250.

(g) The Contractor shall promptly notify the Contracting Officer of all matters relating to any Federal excise tax or duty that reasonably may be expected to result in either an increase or decrease in the contract price and shall take appropriate action as the Contracting Officer directs.

(h) The Government shall, without liability, furnish evidence appropriate to establish exemption from any Federal, State, or local tax when the Contractor requests such evidence and a reasonable basis exists to sustain the exemption.

77. RESERVED

78. DFARS 252.231-7000 SUPPLEMENTAL COST PRINCIPLES (DEC 1991)

When the allowability of costs under this contract is determined in accordance with part 31 of the Federal Acquisition Regulation (FAR) allowability shall also be determined in accordance with part 231 of the DoD FAR Supplement, in effect on the date of this contract.

79. *FAR 52.232-5 PAYMENTS UNDER FIXED-PRICE CONSTRUCTION CONTRACTS (SEPT 2002)

(a) Payment of Price. The Government shall pay the Contractor the contract price as provided in this contract.

(b) Progress Payments. The Government shall make progress payments monthly as the work proceeds, or at more frequent intervals as determined by the Contracting Officer, on estimates of work accomplished which meets the standards of quality established under the contract, as approved by the Contracting Officer.

(1) The Contractor's request for progress payments shall include the following substantiation:

(i) An itemization of the amounts requested, related to the various elements of work required by the contract covered by the payment requested.

(ii) A listing of the amount included for work performed by each subcontractor under the contract.

(iii) A listing of the total amount of each subcontract under the contract.

(iv) A listing of the amounts previously paid to each such subcontractor under the contract.

(v) Additional supporting data in a form and detail required by the Contracting Officer.

(2) In the preparation of estimates, the Contracting Officer may authorize material delivered on the site and preparatory work done to be taken into consideration. Material delivered to the Contractor at locations other than the site also may be taken into consideration if--

(i) Consideration is specifically authorized by this contract; and

(ii) The Contractor furnishes satisfactory evidence that it has acquired title to such material and that the material will be used to perform this contract.

(c) Contractor Certification. Along with each request for progress payments, the Contractor shall furnish the following certification, or payment shall not be made: (However, if the Contractor elects to delete paragraph (c)(4) from the certification, the certification is still acceptable.) I hereby certify, to the best of my knowledge and belief, that--

(1) The amounts requested are only for performance in accordance with the specifications, terms, and conditions of the contract;

(2) All payments due to subcontractors and suppliers from previous payments received under the contract have been made, and timely payments will be made from the proceeds of the payment covered by this certification, in accordance with subcontract agreements and the requirements of chapter 39 of Title 31, United States Code;

(3) This request for progress payments does not include any amounts which the prime contractor intends to withhold or retain from a subcontractor or supplier in accordance with the terms and conditions of the subcontract; and

(4) This certification is not to be construed as final acceptance of a subcontractor's performance.

(Name)

(Title)

(Date)

(d) Refund of Unearned Amounts. If the Contractor, after making a certified request for progress payments, discovers that a portion or all of such request constitutes a payment for performance by the Contractor that fails to conform to the specifications, terms, and conditions of this contract (hereinafter referred to as the "unearned amount"), the Contractor shall--

(1) Notify the Contracting Officer of such performance deficiency; and

(2) Be obligated to pay the Government an amount (computed by the Contracting Officer in the manner provided in paragraph (j) of this clause) equal to interest on the unearned amount from the 8th day after the date of receipt of the unearned amount until--

(i) The date the Contractor notifies the Contracting Officer that the performance deficiency has been corrected; or

(ii) The date the Contractor reduces the amount of any subsequent certified request for progress payments by an amount equal to the unearned amount.

(e) Retainage. If the Contracting Officer finds that satisfactory progress was achieved during any period for which a progress payment is to be made, the Contracting Officer shall authorize payment to be made in full. However, if satisfactory progress has not been made, the Contracting Officer may retain a maximum of 10 percent of the amount of the payment until satisfactory progress is achieved. When the work is substantially complete, the Contracting Officer may retain from previously withheld funds and future progress payments that amount the Contracting Officer considers adequate for protection of the Government and shall release to the Contractor all the remaining withheld funds. Also, on completion and acceptance of each separate building, public work, or other division of the contract, for which the price is stated separately in the contract, payment shall be made for the completed work without retention of a percentage.

(f) Title, Liability, and Reservation of Rights. All material and work covered by progress payments made shall, at the time of payment, become the sole property of the Government, but this shall not be construed as--

(1) Relieving the Contractor from the sole responsibility for al material and work upon which payments have been made or the restoration of any damaged work; or

(2) Waiving the right of the Government to require the fulfillment of all of the terms of the contract.

(g) Reimbursement for Bond Premiums. In making these progress payments, the Government shall, upon request, reimburse the Contractor for the amount of premiums paid for performance and payment bonds (including coinsurance and reinsurance agreements, when applicable) after the Contractor has furnished evidence of full payment to the surety. The retainage provisions in paragraph (e) of this clause shall not apply to that portion of progress payments attributable to bond premiums.

(h) Final Payment. The Government shall pay the amount due the Contractor under this contract after--

(1) Completion and acceptance of all work;

(2) Presentation of a properly executed voucher; and

(3) Presentation of release of all claims against the Government arising by virtue of this contract, other than claims, in stated amounts, that the Contractor has specifically excepted from the operation of the release. A release may also be required of the assignee if the Contractor's claim to amounts payable under this contract has been assigned under the Assignment of Claims Act of 1940 (31 U.S.C. 3727 and 41 U.S.C. 15).

(i) Limitation Because of Undefinitized Work. Notwithstanding any provision of this contract, progress payments shall not exceed 80 percent on work accomplished on undefinitized contract actions. A "contract action" is any action resulting in a contract, as defined in FAR Subpart 2.1, including contract modifications for

additional supplies or services, but not including contract modifications that are within the scope and under the terms of the contract, such as contract modifications issued pursuant to the Changes clause, or funding and other administrative changes.

(j) Interest Computation on Unearned Amounts. In accordance with 31 U.S.C. 3903(c)(1), the amount payable under subparagraph (d)(2) of this clause shall be--

(1) Computed at the rate of average bond equivalent rates of 91-day Treasury bills auctioned at the most recent auction of such bills prior to the date the Contractor receives the unearned amount; and

(2) Deducted from the next available payment to the Contractor.

80. RESERVED.

81. *FAR 52.232-17 INTEREST (JUN 1996)

(a) Except as otherwise provided in this contract under a Price Reduction for Defective Cost or Pricing Data clause or a Cost Accounting Standards clause, all amounts that become payable by the Contractor to the Government under this contract (net of any applicable tax credit under the Internal Revenue Code (26 U.S.C. 1481)) shall bear simple interest from the date due until paid unless paid within 30 days of becoming due. The interest rate shall be the interest rate established by the Secretary of the Treasury as provided in Section 12 of the Contract Disputes Act of 1978 (Public Law 95-563), which is applicable to the period in which the amount becomes due, as provided in paragraph (b) of this clause, and then at the rate applicable for each six-month period as fixed by the Secretary until the amount is paid.

(b) Amounts shall be due at the earliest of the following dates:

(1) The date fixed under this contract.

(2) The date of the first written demand for payment consistent with this contract, including any demand resulting from a default termination.

(3) The date the Government transmits to the Contractor a proposed supplemental agreement to confirm completed negotiations establishing the amount of debt.

(4) If this contract provides for revision of prices, the date of written notice to the Contractor stating the amount of refund payable in connection with a pricing proposal or a negotiated pricing agreement not confirmed by contract modification.

(c) The interest charge made under this clause may be reduced under the procedures prescribed in 32.614-2 of the Federal Acquisition Regulation in effect on the date of this contract.

82. *FAR 52.232-23 ASSIGNMENT OF CLAIMS (JAN 1986)

(a) The Contractor, under the Assignment of Claims Act, as amended, 31 U.S.C. 3727, 41 U.S.C. 15 (hereafter referred to as "the Act"), may assign its rights to be paid amounts due or to become due as a result of the performance of this contract to a bank, trust company, or other financing institution, including any Federal lending agency. The assignee under such an assignment may thereafter further assign or reassign its right under the original assignment to any type of financing institution described in the preceding sentence.

(b) Any assignment or reassignment authorized under the Act and this clause shall cover all unpaid amounts payable under this contract, and shall not be made to more than one party, except that an assignment or reassignment may be made to one party as agent or trustee for two or more parties participating in the financing of this contract.

(c) The Contractor shall not furnish or disclose to any assignee under this contract any classified document (including this contract) or information related to work under this contract until the Contracting Officer authorizes such action in writing.

83. *FAR 52.232-27 PROMPT PAY FOR CONSTRUCTION CONTRACTS (OCT 2003)

Notwithstanding any other payment terms in this contract, the Government will make invoice payments under the terms and conditions specified in this clause. The Government considers payment as being made on the day a check is dated or the date of an electronic funds transfer. Definitions of pertinent terms are set forth in sections 2.101, 32.001, and 32.902 of the Federal Acquisition Regulation. All days referred to in this clause are calendar days, unless otherwise specified. (However, see paragraph (a)(3) concerning payments due on Saturdays, Sundays, and legal holidays.)

(a) *Invoice payments*—(1) *Types of invoice payments.* For purposes of this clause, there are several types of invoice payments that may occur under this contract, as follows:

(i) Progress payments, if provided for elsewhere in this contract, based on Contracting Officer approval of the estimated amount and value of work or services performed, including payments for reaching milestones in any project.

(A) The due date for making such payments is 14 days after the designated billing office receives a proper payment request. If the designated billing office fails to annotate the payment request with the actual date of receipt at the time of receipt, the payment due date is the 14th day after the date of the Contractor's payment request, provided the designated billing office receives a proper payment request and there is no disagreement over quantity, quality, or Contractor compliance with contract requirements.

(B) The due date for payment of any amounts retained by the Contracting Officer in accordance with the clause at 52.232–5, Payments Under Fixed-Price Construction Contracts, is as specified in the contract or, if not specified, 30 days after approval by the Contracting Officer for release to the Contractor.

(ii) Final payments based on completion and acceptance of all work and presentation of release of all claims against the Government arising by virtue of the contract, and payments for partial deliveries that have been accepted by the Government (*e.g.,* each separate building, public work, or other division of the contract for which the price is stated separately in the contract).

(A) The due date for making such payments is the later of the following two events:

(*1*) The 30th day after the designated billing office receives a proper invoice from the Contractor.

(*2*) The 30th day after Government acceptance of the work or services completed by the Contractor. For a final invoice when the payment amount is subject to contract settlement actions (*e.g.,* release of claims), acceptance is deemed to occur on the effective date of the contract settlement.

(B) If the designated billing office fails to annotate the invoice with the date of actual receipt at the time of receipt, the invoice payment due date is the 30th day after the date of the Contractor's invoice, provided the designated billing office receives a proper invoice and there is no disagreement over quantity, quality, or Contractor compliance with contract requirements.

(2) *Contractor's invoice.* The Contractor shall prepare and submit invoices to the designated billing office specified in the contract. A proper invoice must include the items listed in paragraphs (a)(2)(i) through (a)(2)(xi) of this clause. If the invoice does not comply with these requirements, the designated billing office must return it within 7 days after receipt, with the reasons why it is not a proper invoice. When computing any interest penalty owed the Contractor, the Government will take into account if the Government notifies the Contractor of an improper invoice in an untimely manner.

(i) Name and address of the Contractor.

(ii) Invoice date and invoice number. (The Contractor should date invoices as close as possible to the date of mailing or transmission.)

(iii) Contract number or other authorization for work or services performed (including order number and contract line item number).

(iv) Description of work or services performed.

(v) Delivery and payment terms (*e.g.,* discount for prompt payment terms).

(vi) Name and address of Contractor official to whom payment is to be sent (must be the same as that in the contract or in a proper notice of assignment).

(vii) Name (where practicable), title, phone number, and mailing address of person to notify in the event of a defective invoice.

(viii) For payments described in paragraph (a)(1)(i) of this clause, substantiation of the amounts requested and certification in accordance with the requirements of the clause at 52.232–5, Payments Under Fixed-Price Construction Contracts.

(ix) Taxpayer Identification Number (TIN). The Contractor shall include its TIN on the invoice only if required elsewhere in this contract.

(x) Electronic funds transfer (EFT) banking information.

(A) The Contractor shall include EFTbanking information on the invoice only if required elsewhere in this contract.

(B) If EFT banking information is not required to be on the invoice, in order for the invoice to be a proper invoice, the Contractor shall have submitted correct EFT banking information in accordance with the applicable solicitation provision (*e.g.,* 52.232–38, Submission of Electronic Funds Transfer Information with Offer), contract clause (*e.g.,* 52.232–33, Payment by Electronic Funds Transfer—Central Contractor Registration, or 52.232–34, Payment by Electronic Funds Transfer—Other Than Central Contractor Registration), or applicable agency procedures.

(C) EFT banking information is not required if the Government waived the requirement to pay by EFT.

(xi) Any other information or documentation required by the contract.

(3) *Interest penalty.* The designated payment office will pay an interest penalty automatically, without request from the Contractor, if payment is not made by the due date and the conditions listed in paragraphs (a)(3)(i) through (a)(3)(iii) of this clause are met, if applicable. However, when the due date falls on a Saturday, Sunday, or legal holiday, the designated payment office may make payment on the following working day without incurring a late payment interest penalty.

(i) The designated billing office received a proper invoice.

(ii) The Government processed a receiving report or other Government documentation authorizing payment and there was no disagreement over quantity, quality, Contractor compliance with any contract term or condition, or requested progress payment amount.

(iii) In the case of a final invoice for any balance of funds due the Contractor for work or services performed, the amount was not subject to further contract settlement actions between the Government and the Contractor.

(4) *Computing penalty amount.* The Government will compute the interest penalty in accordance with the Office of Management and Budget prompt payment regulations at 5 CFR part 1315.

(i) For the sole purpose of computing an interest penalty that might be due the Contractor for payments described in paragraph (a)(1)(ii) of this clause, Government acceptance or approval is deemed to occur constructively on the 7th day after the Contractor has completed the work or services in accordance with the terms and conditions of the contract. If actual acceptance or approval occurs within the constructive acceptance or approval period, the Government will base the determination of an interest penalty on the actual date of acceptance or approval. Constructive acceptance or constructive approval requirements do not apply if there is a disagreement over quantity, quality, or Contractor compliance with a contract provision. These requirements also do not compel Government officials to accept work or services, approve Contractor estimates, perform contract administration functions, or make payment prior to fulfilling their responsibilities.

(ii) The prompt payment regulations at 5 CFR 1315.10(c) do not require the Government to pay interest penalties if payment delays are due to disagreement between the Government and the Contractor over the payment amount or other issues involving contract compliance, or on amounts temporarily withheld or retained in accordance with the terms of the contract. The Government and the Contractor shall resolve claims involving disputes, and any interest that may be payable in accordance with the clause at FAR 52.233–1, Disputes.

(5) *Discounts for prompt payment.* The designated payment office will pay an interest penalty automatically, without request from the Contractor, if the Government takes a discount for prompt payment improperly. The Government will calculate the interest penalty in accordance with the prompt payment regulations at 5 CFR part 1315.

(6) *Additional interest penalty.* (i) The designated payment office will pay a penalty amount, calculated in accordance with the prompt payment regulations at 5 CFR part 1315 in addition to the interest penalty

amount only if—

(A) The Government owes an interest penalty of $1 or more;

(B) The designated payment office does not pay the interest penalty within 10 days after the date the invoice amount is paid; and

(C) The Contractor makes a written demand to the designated payment office for additional penalty payment, in accordance with paragraph (a)(6)(ii) of this clause, postmarked not later than 40 days after the date the invoice amount is paid.

(ii)(A) The Contractor shall support written demands for additional penalty payments with the following data. The Government will not request any additional data. The Contractor shall—

(*1*) Specifically assert that late payment interest is due under a specific invoice, and request payment of all overdue late payment interest penalty and such additional penalty as may be required;

(*2*) Attach a copy of the invoice on which the unpaid late payment interest was due; and

(*3*) State that payment of the principal has been received, including the date of receipt.

(B) If there is no postmark or the postmark is illegible—

(1) The designated payment office that receives the demand will annotate it with the date of receipt provided the demand is received on or before the 40th day after payment was made; or

(*2*) If the designated payment office fails to make the required annotation, the Government will determine the demand's validity based on the date the Contractor has placed on the demand, provided such date is no later than the 40th day after payment was made.

(b) *Contract financing payments.* If this contract provides for contract financing, the Government will make contract financing payments in accordance with the applicable contract financing clause.

(c) *Subcontract clause requirements.* The Contractor shall include in each subcontract for property or services (including a material supplier) for the purpose of performing this contract the following:

(1) *Prompt payment for subcontractors.* A payment clause that obligates the Contractor to pay the subcontractor for satisfactory performance under its subcontract not later than 7 days from receipt of payment out of such amounts as are paid to the Contractor under this contract.

(2) *Interest for subcontractors.* An interest penalty clause that obligates the Contractor to pay to the subcontractor an interest penalty for each payment not made in accordance with the payment clause—

(i) For the period beginning on the day after the required payment date and ending on the date on which payment of the amount due is made; and

(ii) Computed at the rate of interest established by the Secretary of the Treasury, and published in the **Federal Register,** for interest payments under section 12 of the Contract Disputes Act of 1978 (41 U.S.C. 611) in effect at the time the Contractor accrues the obligation to pay an interest penalty.

(3) *Subcontractor clause flowdown.* A clause requiring each subcontractor to

(i) Include a payment clause and an interest penalty clause conforming to the standards set forth in paragraphs (c)(1) and (c)(2) of this clause in each of its subcontracts; and

(ii) Require each of its subcontractors to include such clauses in their subcontracts with each lower-tier subcontractor or supplier.

(d) *Subcontract clause interpretation.* The clauses required by paragraph (c) of this clause shall not be construed to impair the right of the Contractor or a subcontractor at any tier to negotiate, and to include in their subcontract, provisions that—

(1) *Retainage permitted.* Permit the Contractor or a subcontractor to retain (without cause) a specified percentage of each progress payment otherwise due to a subcontractor for satisfactory performance under the subcontract without incurring any obligation to pay a late payment interest penalty, in accordance with terms and conditions agreed to by the parties to the subcontract, giving such recognition as the parties deem appropriate to the ability of a subcontractor to furnish a performance bond and a payment bond;

(2) *Withholding permitted.* Permit the Contractor or subcontractor to make a determination that part or all of the subcontractor's request for payment may be withheld in accordance with the subcontract agreement; and

(3) *Withholding requirements.* Permit such withholding without incurring any obligation to pay a

late payment penalty if—

(i) A notice conforming to the standards of paragraph (g) of this clause previously has been furnished to the subcontractor; and

(ii) The Contractor furnishes to the Contracting Officer a copy of any notice issued by a Contractor pursuant to paragraph (d)(3)(i) of this clause.

(e) *Subcontractor withholding procedures.* If a Contractor, after making a request for payment to the Government but before making a payment to a subcontractor for the subcontractor's performance covered by the payment request, discovers that all or a portion of the payment otherwise due such subcontractor is subject to withholding from the subcontractor in accordance with the subcontract agreement, then the Contractor shall—

(1) *Subcontractor notice.* Furnish to the subcontractor a notice conforming to the standards of paragraph (g) of this clause as soon as practicable upon ascertaining the cause giving rise to a withholding, but prior to the due date for subcontractor payment;

(2) *Contracting Officer notice.* Furnish to the Contracting Officer, as soon as practicable, a copy of the notice furnished to the subcontractor pursuant to paragraph (e)(1) of this clause;

(3) *Subcontractor progress payment reduction.* Reduce the subcontractor's progress payment by an amount not to exceed the amount specified in the notice of withholding furnished under paragraph (e)(1) of this clause;

(4) *Subsequent subcontractor payment.* Pay the subcontractor as soon as practicable after the correction of the identified subcontract performance deficiency, and—

(i) Make such payment within—

(A) Seven days after correction of the identified subcontract performance deficiency (unless the funds therefor must be recovered from the Government because of a reduction under paragraph (e)(5)(i)) of this clause; or

(B) Seven days after the Contractor recovers such funds from the Government; or

(ii) Incur an obligation to pay a late payment interest penalty computed at the rate of interest established by the Secretary of the Treasury, and published in the **Federal Register**, for interest payments under section 12 of the Contracts Disputes Act of 1978 (41 U.S.C. 611) in effect at the time the Contractor accrues the obligation to pay an interest penalty;

(5) *Notice to Contracting Officer.* Notify the Contracting Officer upon—

(i) Reduction of the amount of any subsequent certified application for payment; or

(ii) Payment to the subcontractor of any withheld amounts of a progress payment, specifying—

(A) The amounts withheld under paragraph (e)(1) of this clause; and

(B) The dates that such withholding began and ended; and

(6) *Interest to Government.* Be obligated to pay to the Government an amount equal to interest on the withheld payments (computed in the manner provided in 31 U.S.C. 3903(c)(1)), from the 8th day after receipt of the withheld amounts from the Government until—

(i) The day the identified subcontractor performance deficiency is corrected; or

(ii) The date that any subsequent payment is reduced under paragraph (e)(5)(i) of this clause.

(f) *Third-party deficiency reports*—(1) *Withholding from subcontractor.* If a Contractor, after making payment to a first-tier subcontractor, receives from a supplier or subcontractor of the first-tier subcontractor (hereafter referred to as a ''second-tier subcontractor'') a written notice in accordance with section 2 of the Act of August 24, 1935 (40 U.S.C. 270b, Miller Act), asserting a deficiency in such first-tier subcontractor's performance under the contract for which the Contractor may be ultimately liable, and the Contractor determines that all or a portion of future payments otherwise due such first-tier subcontractor is subject to withholding in accordance with the subcontract agreement, the Contractor may, without incurring an obligation to pay an interest penalty under paragraph (e)(6) of this clause—

(i) Furnish to the first-tier subcontractor a notice conforming to the standards of paragraph (g) of this clause as soon as practicable upon making such determination; and

(ii) Withhold from the first-tier subcontractor's next available progress payment or payments an amount not to exceed the amount specified in the notice of withholding furnished under paragraph (f)(1)(i) of this clause.

(2) *Subsequent payment or interest charge.* As soon as practicable, but not later than 7 days after receipt of satisfactory written notification that the identified subcontract performance deficiency has been corrected, the Contractor shall—

(i) Pay the amount withheld under paragraph (f)(1)(ii) of this clause to such first-tier subcontractor; or

(ii) Incur an obligation to pay a late payment interest penalty to such first-tier subcontractor computed at the rate of interest established by the Secretary of the Treasury, and published in the **Federal Register**, for interest payments under section 12 of the Contracts Disputes Act of 1978 (41 U.S.C. 611) in effect at the time the Contractor accrues the obligation to pay an interest penalty.

(g) *Written notice of subcontractor withholding.* The Contractor shall issue a written notice of any withholding to a subcontractor (with a copy furnished to the Contracting Officer), specifying—

(1) The amount to be withheld;

(2) The specific causes for the withholding under the terms of the subcontract; and

(3) The remedial actions to be taken by the subcontractor in order to receive payment of the amounts withheld.

(h) *Subcontractor payment entitlement.* The Contractor may not request payment from the Government of any amount withheld or retained in accordance with paragraph (d) of this clause until such time as the Contractor has determined and certified to the Contracting Officer that the subcontractor is entitled to the payment of such amount.

(i) *Prime-subcontractor disputes.* A dispute between the Contractor and subcontractor relating to the amount or entitlement of a subcontractor to a payment or a late payment interest penalty under a clause included in the subcontract pursuant to paragraph (c) of this clause does not constitute a dispute to which the Government is a party. The Government may not be interpleaded in any judicial or administrative proceeding involving such a dispute.

(j) *Preservation of prime-subcontractor rights.* Except as provided in paragraph (i) of this clause, this clause shall not limit or impair any contractual, administrative, or judicial remedies otherwise available to the Contractor or a subcontractor in the event of a dispute involving late payment or nonpayment by the Contractor or deficient subcontract performance or nonperformance by a subcontractor.

(k) *Non-recourse for prime contractor interest penalty.* The Contractor's obligation to pay an interest penalty to a subcontractor pursuant to the clauses included in a subcontract under paragraph (c) of this clause shall not be construed to be an obligation of the Government for such interest penalty. A cost-reimbursement claim may not include any amount for reimbursement of such interest penalty.

(l) *Overpayments*. If the Contractor becomes aware of a duplicate contract financing or invoice payment or that the Government has otherwise overpaid on a contract financing or invoice payment, the Contractor shall immediately notify the Contracting Officer and request instructions for disposition of the overpayment.
(End of clause)

84. *FAR 52.232-33 PAYMENT BY ELECTRONIC FUNDS TRANSFER –CENTRAL CONTRACTOR REGISTRATION (OCT 2003)

(a) *Method of payment*. (1) All payments by the Government under this contract shall be made by electronic funds transfer (EFT), except as provided in paragraph (a)(2) of this clause. As used in this clause, the term ''EFT'' refers to the funds transfer and may also include the payment information transfer.

(2) In the event the Government is unable to release one or more payments by EFT, the Contractor agrees to either—

(i) Accept payment by check or some other mutually agreeable method of payment; or

(ii) Request the Government to extend the payment due date until such time as the Government can make payment by EFT (but see paragraph (d) of this clause).

(b) *Contractor's EFT information*. The Government shall make payment to the Contractor using the EFT information contained in the Central Contractor Registration (CCR) database. In the event that the EFT information changes, the Contractor shall be responsible for providing the updated information to the CCR database.

(c) *Mechanisms for EFT payment*. The Government may make payment by EFT through either the Automated Clearing House (ACH) network, subject to the rules of the National Automated Clearing House Association, or the Fedwire Transfer System. The rules governing Federal payments through the ACH are contained

in 31 CFR part 210.

(d) *Suspension of payment*. If the Contractor's EFT information in the CCR database is incorrect, then the Government need not make payment to the Contractor under this contract until correct EFT information is entered into the CCR database; and any invoice or contract financing request shall be deemed not to be a proper invoice for the purpose of prompt payment under this contract. The prompt payment terms of the contract regarding notice of an improper invoice and delays in accrual of interest penalties apply.

(e) *Contractor EFT arrangements*. If the Contractor has identified multiple payment receiving points (i.e., more than one remittance address and/or EFT information set) in the CCR database, and the Contractor has not notified the Government of the payment receiving point applicable to this contract, the Government shall make payment to the first payment receiving point (EFT information set or remittance address as applicable) listed in the CCR database.

(f) *Liability for uncompleted or erroneous transfers*. (1) If an uncompleted or erroneous transfer occurs because the Government used
the Contractor's EFT information incorrectly, the Government remains responsible for—

(i) Making a correct payment;

(ii) Paying any prompt payment penalty due; and

(iii) Recovering any erroneously directed funds.

(2) If an uncompleted or erroneous transfer occurs because the Contractor's EFT information was incorrect, or was revised within 30 days of Government release of the EFT payment transaction instruction to the Federal Reserve System, and—

(i) If the funds are no longer under the control of the payment office, the Government is deemed to have made payment and the Contractor is responsible for recovery of any erroneously directed funds; or

(ii) If the funds remain under the control of the payment office, the Government shall not make payment, and the provisions of paragraph (d) of this clause shall apply.

(g) *EFT and assignment of claims*. If the Contractor assigns the proceeds of this contract as provided for in the assignment of claims terms of this contract, the Contractor shall require as a condition of any such assignment, that the assignee shall register separately in the CCR database and shall be paid by EFT in accordance with the terms of this clause. Notwithstanding any other requirement of this contract, payment to an ultimate recipient other than the Contractor, or a financial institution properly recognized under an assignment of claims pursuant to Subpart 32.8, is not permitted. In all respects, the requirements of this clause shall apply to the assignee as if it were the Contractor. EFT information that shows the ultimate recipient of the transfer to be other than the Contractor, in the absence of a proper assignment of claims acceptable to the Government, is incorrect EFT information within the meaning of paragraph
(d) of this clause.

(h) *Liability for change of EFT information by financial agent.* The Government is not liable for errors resulting from changes to EFT information made by the Contractor's financial agent.

(i) *Payment information*. The payment or disbursing office shall forward to the Contractor available payment information that is suitable for transmission as of the date of release of the EFT instruction to the Federal Reserve System. The Government may request the Contractor to designate a desired format and method(s) for delivery of payment information from a list of formats and methods the payment office is capable of executing. However, the Government does not guarantee that any particular format or method of delivery is available at any particular payment office and retains the latitude to use the format and delivery method most convenient to the Government. If the Government makes payment by check in accordance with paragraph (a) of this clause, the Government shall mail the payment information to the remittance address contained in the CCR database.
(End of Clause)

85. DFARS 252.232-7004 DOD PROGRESS PAYMENT RATES (OCT 2001)

(a) If the contractor is a small business concern, the Progress Payments clause of this contract is modified to change each mention of the progress payment rate and liquidation rate (excepting paragraph (k), *Limitations on Undefinitized Contract Actions*) to 90 percent.

(b) If the contractor is a small disadvantaged business concern, the Progress Payments clause of this contract is modified to change each mention of the progress payment rate and liquidation rate (excepting paragraph (k), *Limitations on Undefinitized Contract Actions*) to 95 percent.
(End of clause)

86. DFARS 252.232-7005 REIMBURSEMENT OF SUBCONTRACTOR ADVANCE PAYMENTS--DOD PILOT MENTOR-PROTEGE PROGRAM (SEP 2001)

(a) The Government will reimburse the Contractor for any advance payments made by the Contractor, as a mentor firm, to a protege firm, pursuant to an approved mentor-protege agreement, provided-

(1) The Contractor's subcontract with the protege firm includes a provision substantially the same as FAR 52.232-12, Advance Payments;

(2) The Contractor has administered the advance payments in accordance with the policies of FAR Subpart 32.4; and

(3) The Contractor agrees that any financial loss resulting from the failure or inability of the protege firm to repay any unliquidated advance payments is the sole financial responsibility of the Contractor.

(b) For a fixed price type contract, advance payments made to a protege firm shall be paid and administered as if they were 100 percent progress payments. The Contractor shall include as a separate attachment with each Standard Form (SF) 1443, Contractor's Request for Progress Payment, a request for reimbursement of advance payments made to a protege firm. The attachment shall provide a separate calculation of lines 14a through 14e of SF 1443 for each protege, reflecting the status of advance payments made to that protege.

(c) For cost reimbursable contracts, reimbursement of advance payments shall be made via public voucher. The Contractor shall show the amounts of advance payments made to each protege on the public voucher, in the form and detail directed by the cognizant contracting officer or contract auditor.
(End of clause)

87. *FAR 52.233-1 DISPUTES (JULY 2002)

(a) This contract is subject to the Contract Disputes Act of 1978, as amended (41 U.S.C. 601-613).

(b) Except as provided in the Act, all disputes arising under or relating to this contract shall be resolved under this clause.

(c) "Claim," as used in this clause, means a written demand or written assertion by one of the contracting parties seeking, as a matter of right, the payment of money in a sum certain, the adjustment or interpretation of contract terms, or other relief arising under or relating to this contract. However, a written demand or written assertion by the Contractor seeking the payment of money exceeding $100,000 is not a claim under the Act until certified. A voucher, invoice, or other routine request for payment that is not in dispute when submitted is not a claim under the Act. The submission may be converted to a claim under the Act, by complying with the submission and certification requirements of this clause, if it is disputed either as to liability or amount or is not acted upon in a reasonable time.

(d)(1) A claim by the Contractor shall be made in writing and, unless otherwise stated in this contract, submitted within 6 years after accrual of the claim to the Contracting Officer for a written decision. A claim by the Government against the Contractor shall be subject to a written decision by the Contracting Officer.

(2) (i) Contractors shall provide the certification specified in paragraph (d)(2)(iii) of this clause when submitting any claim exceeding $100,000.

(ii) The certification requirement does not apply to issues in controversy that have not been submitted as all or part of a claim.

(iii) The certification shall state as follows:

'I certify that the claim is made in good faith; that the supporting data are accurate and complete to the best of my knowledge and belief; that the amount requested accurately reflects the contract adjustment for which the Contractor believes the Government is liable; and that I am duly authorized to certify the claim on behalf of the Contractor.'

(3) The certification may be executed by any person duly authorized to bind the Contractor with respect to the claim.

(e) For Contractor claims of $100,000 or less, the Contracting Officer must, if requested in writing by the Contractor, render a decision within 60 days of the request. For Contractor-certified claims over $100,000, the Contracting Officer must, within 60 days, decide the claim or notify the Contractor of the date by which the decision will be made.

(f) The Contracting Officer's decision shall be final unless the Contractor appeals or files a suit as provided in the Act.

(g) If the claim by the Contractor is submitted to the Contracting Officer or a claim by the Government is presented to the Contractor, the parties, by mutual consent, may agree to use alternative dispute resolution (ADR). If the Contractor refuses an offer for ADR, the Contractor shall inform the Contracting Officer, in writing, of the Contractor's specific reasons for rejecting the offer.

(h) The Government shall pay interest on the amount found due and unpaid from (1) the date the Contracting Officer receives the claim (certified if required), or (2) the date that payment otherwise would be due, if that date is later, until the date of payment. With regard to claims having defective certifications, as defined in (FAR) 48 CFR 33.201, interest shall be paid from the date that the Contracting Officer initially receives the claim. Simple interest on claims shall be paid at the rate, fixed by the Secretary of the Treasury as provided in the Act, which is applicable to the period during which the Contracting Officer receives the claim and then at the rate applicable for each 6-month period as fixed by the Treasury Secretary during the pendency of the claim.

(i) The Contractor shall proceed diligently with performance of this contract, pending final resolution of any request for relief, claim, appeal, or action arising under the contract, and comply with any decision of the Contracting Officer.

88. *FAR 52.233-3 PROTEST AFTER AWARD (AUG 1996)

(a) Upon receipt of a notice of protest (as defined in FAR 33.101) or a determination that a protest is likely (see FAR 33.102(d)), the Contracting Officer may, by written order to the Contractor, direct the Contractor to stop performance of the work called for by this contract. The order shall be specifically identified as a stop-work order issued under this clause. Upon receipt of the order, the Contractor shall immediately comply with its terms and take all reasonable steps to minimize the incurrence of costs allocable to the work covered by the order during the period of work stoppage. Upon receipt of the final decision in the protest, the Contracting Officer shall either--

(1) Cancel the stop-work order; or

(2) Terminate the work covered by the order as provided in the Default, or the Termination for Convenience of the Government, clause of this contract.

(b) If a stop-work order issued under this clause is canceled either before or after a final decision in the protest, the Contractor shall resume work. The Contracting Officer shall make an equitable adjustment in the delivery schedule or contract price, or both, and the contract shall be modified, in writing, accordingly, if--

(1) The stop-work order results in an increase in the time required for, or in the Contractor's cost properly allocable to, the performance of any part of this contract; and

(2) The Contractor asserts its right to an adjustment within 30 days after the end of the period of work stoppage; provided, that if the Contracting Officer decides the facts justify the action, the Contracting Officer may receive and act upon a proposal at any time before final payment under this contract.

(c) If a stop-work order is not canceled and the work covered by the order is terminated for the convenience of the Government, the Contracting Officer shall allow reasonable costs resulting from the stop-work order in arriving at the termination settlement.

(d) If a stop-work order is not canceled and the work covered by the order is terminated for default, the Contracting Officer shall allow, by equitable adjustment or otherwise, reasonable costs resulting from the stop-work order.

(e) The Government's rights to terminate this contract at any time are not affected by action taken under this clause.

(f) If, as the result of the Contractor's intentional or negligent misstatement, misrepresentation, or miscertification, a protest related to this contract is sustained, and the Government pays costs, as provided in FAR

33.102(b)(2) or 33.104(h)(1), the Government may require the Contractor to reimburse the Government the amount of such costs. In addition to any other remedy available, and pursuant to the requirements of Subpart 32.6, the Government may collect this debt by offsetting the amount against any payment due the Contractor under any contract between the Contractor and the Government.

89. RESERVED

90. FAR 52.236-2 DIFFERING SITE CONDITIONS (APR 1984)

(a) The Contractor shall promptly, and before the conditions are disturbed, give a written notice to the Contracting Officer of

(1) subsurface or latent physical conditions at the site which differ materially from those indicated in this contract, or

(2) unknown physical conditions at the site, of an unusual nature, which differ materially from those ordinarily encountered and generally recognized as inhering in work of the character provided for in the contract.

(b) The Contracting Officer shall investigate the site conditions promptly after receiving the notice. If the conditions do materially so differ and cause an increase or decrease in the Contractor's cost of, or the time required for, performing any part of the work under this contract, whether or not changed as a result of the conditions, an equitable adjustment shall be made under this clause and the contract modified in writing accordingly.

(c) No request by the Contractor for an equitable adjustment to the contract under this clause shall be allowed, unless the Contractor has given the written notice required, provided, that the time prescribed in (a) above for giving written notice may be extended by the Contracting Officer.

(d) No request by the Contractor for an equitable adjustment to the contract for differing site conditions shall be allowed if made after final payment under this contract.

91. *FAR 52.236-3 SITE INVESTIGATION AND CONDITIONS AFFECTING THE WORK (APR 1984)

(a) The Contractor acknowledges that it has taken steps reasonably necessary to ascertain the nature and location of the work, and that it has investigated and satisfied itself as to the general and local conditions which can affect the work or its cost, including but not limited to

(1) conditions bearing upon transportation, disposal, handling, and storage of materials;

(2) the availability of labor, water, electric power, and roads;

(3) uncertainties of weather, river stages, tides, or similar physical conditions at the site;

(4) the conformation and conditions of the ground; and

(5) the character of equipment and facilities needed preliminary to and during work performance. The Contractor also acknowledges that it has satisfied itself as to the character, quality, and quantity of surface and subsurface materials or obstacles to be encountered insofar as this information is reasonably ascertainable from an inspection of the site, including all exploratory work done by the Government, as well as from the drawings and specifications made a part of this contract. Any failure of the Contractor to take the actions described and acknowledged in this paragraph will not relieve the Contractor from responsibility for estimating properly the difficulty and cost of successfully performing the work, or for proceeding to successfully perform the work without additional expense to the Government.

(b) The Government assumes no responsibility for any conclusions or interpretations made by the Contractor based on the information made available by the Government. Nor does the Government assume responsibility for any understanding reached or representation made concerning conditions which can affect the work by any of its officers or agents before the execution of this contract, unless that understanding or representation is expressly stated in this contract.

92. *FAR 52.236-5 MATERIAL AND WORKMANSHIP (APR 1984)

(a) All equipment, material, and articles incorporated into the work covered by this contract shall be new and of the most suitable grade for the purpose intended, unless otherwise specifically provided in this contract. References in the specifications to equipment, material, articles, or patented processes by trade name, make, or catalog number, shall be regarded as establishing a standard of quality and shall not be construed as limiting competition. The Contractor may, at its option, use any equipment, material, article, or process that, in the judgment of the Contracting Officer, is equal to that named in the specifications, unless otherwise specifically provided in this contract.

(b) The Contractor shall obtain the Contracting Officer's approval of the machinery and mechanical and other equipment to be incorporated into the work. When requesting approval, the Contractor shall furnish to the Contracting Officer the name of the manufacturer, the model number, and other information concerning the performance, capacity, nature, and rating of the machinery and mechanical and other equipment. When required by this contract or by the Contracting Officer, the Contractor shall also obtain the Contracting Officer's approval of the material or articles which the Contractor contemplates incorporating into the work. When requesting approval, the Contractor shall provide full information concerning the material or articles. When directed to do so, the Contractor shall submit samples for approval at the Contractor's expense, with all shipping charges prepaid. Machinery, equipment, material, and articles that do not have the required approval shall be installed or used at the risk of subsequent rejection.

(c) All work under this contract shall be performed in a skillful and workmanlike manner. The Contracting Officer may require, in writing, that the Contractor remove from the work any employee the Contracting Officer deems incompetent, careless, or otherwise objectionable.

93. RESERVED

94. *FAR 52.236-6 SUPERINTENDENCE BY THE CONTRACTOR (APR 1984)

At all times during performance of this contract and until the work is completed and accepted, the Contractor shall directly superintend the work or assign and have on the work site a competent superintendent who is satisfactory to the Contracting Officer and has authority to act for the Contractor.

95. FAR 52.236-7 PERMITS AND RESPONSIBILITIES (NOV 1991)

The Contractor shall, without additional expense to the Government, be responsible for obtaining any necessary licenses and permits, and for complying with any Federal, State, and municipal laws, codes, and regulations applicable to the performance of the work. The Contractor shall also be responsible for all damages to persons or property that occur as a result of the Contractor's fault or negligence. The Contractor shall also be responsible for all materials delivered and work performed until completion and acceptance of the entire work, except for any completed unit of work which may have been accepted under the contract.

96. *FAR 52.236-8 OTHER CONTRACTS (APR 1984)

The Government may undertake or award other contracts for additional work at or near the site of the work under this contract. The Contractor shall fully cooperate with the other contractors and with Government employees and shall carefully adapt scheduling and performing the work under this contract to accommodate the additional work, heeding any direction that may be provided by the Contracting Officer. The Contractor shall not commit or permit any act that will interfere with the performance of work by any other contractor or by Government employees.

97. *FAR 52.236-9 PROTECTION OF EXISTING VEGETATION, STRUCTURES, EQUIPMENT, UTILITIES, AND IMPROVEMENTS (APR 1984)

(a) The Contractor shall preserve and protect all structures, equipment, and vegetation (such as trees, shrubs, and grass) on or adjacent to the work site, which are not to be removed and which do not unreasonably interfere with the work required under this contract. The Contractor shall only remove trees when specifically authorized to do so, and shall avoid damaging vegetation that will remain in place. If any limbs or branches of trees are broken during contract performance, or by the careless operation of equipment, or by workmen, the Contractor shall trim those limbs or branches with a clean cut and paint the cut with a tree-pruning compound as directed by the Contracting Officer.

(b) The Contractor shall protect from damage all existing improvements and utilities

(1) at or near the work site, and

(2) on adjacent property of a third party, the locations of which are made known to or should be known by the Contractor. The Contractor shall repair any damage to those facilities, including those that are the property of a third party, resulting from failure to comply with the requirements of this contract or failure to exercise reasonable care in performing the work. If the Contractor fails or refused to repair the damage promptly, the Contracting Officer may have the necessary work performed and charge the cost to the Contractor.

98. *FAR 52.236-10 OPERATIONS AND STORAGE AREAS (APR 1984)

(a) The Contractor shall confine all operations (including storage of materials) on Government premises to areas authorized or approved by the Contracting Officer. The Contractor shall hold and save the Government, its officers and agents, free and harmless from liability of any nature occasioned by the Contractor's performance.

(b) Temporary buildings (e.g., storage sheds, shops, offices) and utilities may be erected by the Contractor only with the approval of the Contracting Officer and shall be built with labor and materials furnished by the Contractor without expense to the Government. The temporary buildings and utilities shall remain the property of the Contractor and shall be removed by the Contractor at its expense upon completion of the work. With the written consent of the Contracting Officer, the buildings and utilities may be abandoned and need not be removed.

(c) The Contractor shall, under regulations prescribed by the Contracting Officer, use only established roadways, or use temporary roadways constructed by the Contractor when and as authorized by the Contracting Officer. When materials are transported in prosecuting the work, vehicles shall not be loaded beyond the loading capacity recommended by the manufacturer of the vehicle or prescribed by any Federal, State, or local law or regulation. When it is necessary to cross curbs or sidewalks, the Contractor shall protect them from damage. The Contractor shall repair or pay for the repair of any damaged curbs, sidewalks, or roads.

99. *FAR 52.236-11 USE AND POSSESSION PRIOR TO COMPLETION (APR 1984)

(a) The Government shall have the right to take possession of or use any completed or partially completed part of the work. Before taking possession of or using any work, the Contracting Officer shall furnish the Contractor a list of items of work remaining to be performed or corrected on those portions of the work that the Government intends to take possession of or use. However, failure of the Contracting Officer to list any item of work shall not relieve the Contractor of responsibility for complying with the terms of the contract. The Government's possession or use shall not be deemed an acceptance of any work under the contract.

(b) While the Government has such possession or use, the Contractor shall be relieved of the responsibility for the loss of or damage to the work resulting from the Government's possession or use, notwithstanding the terms of the clause in this contract entitled "Permits and Responsibilities." If prior possession or use by the Government delays the progress of the work or causes additional expense to the Contractor, an equitable adjustment shall be made in the contract price or the time of completion, and the contract shall be modified in writing accordingly.

100.*FAR 52.236-12 CLEANING UP (APR 1984)

The Contractor shall at all times keep the work area, including storage areas, free from accumulations of waste materials. Before completing the work, the Contractor shall remove from the work and premises any rubbish, tools, scaffolding, equipment, and materials that are not the property of the Government. Upon completing the work, the Contractor shall leave the work area in a clean, neat, and orderly condition satisfactory to the Contracting Officer.

101.*FAR 52.236-13 ACCIDENT PREVENTION-ALTERNATE I (NOV 1991)

(a) The Contractor shall provide and maintain work environments and procedures which will (1) safeguard the public and Government personnel, property, materials, supplies, and equipment exposed to Contractor operations and activities; (2) avoid interruptions of Government operations and delays in project completion dates; and (3) control costs in the performance of this contract.

(b) For these purposes on contracts for construction or dismantling, demolition, or removal of improvements, the Contractor shall--

(1) Provide appropriate safety barricades, signs, and signal lights;

(2) Comply with the standards issued by the Secretary of Labor at 29 CFR Part 1926 and 29 CFR Part 1910; and

(3) Ensure that any additional measures the Contracting Officer determines to be reasonably necessary for the purposes are taken.

(c) If this contract is for construction or dismantling, demolition or removal of improvements with any Department of Defense agency or component, the Contractor shall comply with all pertinent provisions of the latest version of U.S. Army Corps of engineers Safety and Health Requirements Manual, EM 385-1-1, in effect on the date of the solicitation.

(d) Whenever the Contracting Officer becomes aware of any noncompliance with these requirements or any condition which poses a serious or imminent danger to the health or safety of the public or Government personnel, the Contracting Officer shall notify the Contractor orally, with written confirmation, and request immediate initiation of corrective action. This notice, when delivered to the Contractor or the Contractor's representative at the work site, shall be deemed sufficient notice of the noncompliance and that corrective action is required. After receiving the notice, the Contractor shall immediately take corrective action. If the Contractor fails or refuses to promptly take corrective action, the Contracting Officer may issue an order stopping all or part of the work until satisfactory corrective action has been taken. The Contractor shall not be entitled to any equitable adjustment of the contract price or extension of the performance schedule on any stop work order issued under this clause.

(e) The Contractor shall insert this clause, including this paragraph (e), with appropriate changes in the designation of the parties, in subcontractors.

(f) Before commencing the work, the Contractor shall--

(1) Submit a written proposed plan for implementing this clause. The plan shall include an analysis of the significant hazards to life, limb, and property inherent in contract work performance and a plan for controlling these hazards; and

(2) Meet with representatives of the Contracting Officer to discuss and develop a mutual understanding relative to administration of the overall safety program.

102.*FAR 52.236-14 AVAILABILITY AND USE OF UTILITY SERVICES (APR 1984)

(a) The Government shall make all reasonably required amounts of utilities available to the Contractor from existing outlets and supplies, as specified in the contract. Unless otherwise provided in the contract, the amount of each utility service consumed shall be charged to or paid for by the Contractor at prevailing rates charged to the Government or, where the utility is produced by the Government, at reasonable rates determined by the Contracting Officer. The Contractor shall carefully conserve any utilities furnished without charge.

(b) The Contractor, at its expense and in a workmanlike manner satisfactory to the Contracting Officer, shall install and maintain all necessary temporary connections and distribution lines, and all meters required to measure the amount of each utility used for the purpose of determining charges. Before final acceptance of the work by the Government, the Contractor shall remove all the temporary connections, distribution lines, meters, and associated paraphernalia.

103.FAR 52.236-15 SCHEDULES FOR CONSTRUCTION CONTRACTS (APR 1984)

(a) The Contractor shall, within five days after the work commences on the contract or another period of time determined by the Contracting Officer, prepare and submit to the Contracting Officer for approval three copies of a practicable schedule showing the order in which the Contractor proposes to perform the work, and the dates on which the Contractor contemplates starting and completing the several salient features of the work (including acquiring materials, plant, and equipment). The schedule shall be in the form of a progress chart of suitable scale to indicate appropriately the percentage of work scheduled for completion by any given date during the period. If the Contractor fails to submit a schedule within the time prescribed, the Contracting Officer may withhold approval of progress payments until the Contractor submits the required schedule.

(b) The Contractor shall enter the actual progress on the chart as directed by the Contracting Officer, and upon doing so shall immediately deliver three copies of the annotated schedule to the Contracting Officer. If, in the opinion of the Contracting Officer, the Contractor falls behind the approved schedule, the Contractor shall take steps necessary to improve its progress, including those that may be required by the Contracting Officer, without additional cost to the Government. In this circumstance, the Contracting Officer may require the Contractor to increase the number of shifts, overtime operations, days of work, and/or the amount of construction plant, and to submit for approval any supplementary schedule or schedules in chart form as the Contracting Officer deems necessary to demonstrate how the approved rate of progress will be regained.

(c) Failure of the Contractor to comply with the requirements of the Contracting Officer under this clause shall be grounds for a determination by the Contracting Officer that the Contractor is not prosecuting the work with sufficient diligence to ensure completion within the time specified in the contract. Upon making this determination, the Contracting Officer may terminate the Contractor's right to proceed with the work, or any separable part of it, in accordance with the default terms of this contract.

104.*FAR 52.236-17 LAYOUT OF WORK (APR 1984)

The Contractor shall lay out its work from Government-established base lines and bench marks indicated on the drawings, and shall be responsible for all measurements in connection with the layout. The Contractor shall furnish, at its own expense, all stakes, templates, platforms, equipment, tools, materials, and labor required to lay out any part of the work. The Contractor shall be responsible for executing the work to the lines and grades that may be established or indicated by the Contracting Officer. The Contractor shall also be responsible for maintaining and preserving all stakes and other marks established by the Contracting Officer until authorized to remove them. If such marks are destroyed by the Contractor or through its negligence before their removal is authorized, the Contracting Officer may replace them and deduct the expense of the replacement from any amounts due or to become due to the Contractor.

105.FAR 52.236-21 SPECIFICATIONS AND DRAWINGS FOR CONSTRUCTION (FEB 1997)

(a) The Contractor shall keep on the work site a copy of the drawings and specifications and shall at all times give the Contracting Officer access thereto. Anything mentioned in the specifications and not shown on the drawings, or shown on the drawings and not mentioned in the specifications, shall be of like effect as if shown or mentioned in both. In case of difference between drawings and specifications, the specifications shall govern. In case of discrepancy in the figures, in the drawings, or in the specifications, the matter shall be promptly submitted to the Contracting Officer, who shall promptly make a determination in writing. Any adjustment by the Contractor

without such a determination shall be at its own risk and expense. The Contracting Officer shall furnish from time to time such detailed drawings and other information as considered necessary, unless otherwise provided.

(b) Wherever in the specifications or upon the drawings the words "directed," "required," "ordered," "designated," "prescribed," or words of like import are used, it shall be understood that the "direction," "requirement," "order," "designation," or "prescription," of the Contracting Officer is intended and similarly the words "approved," "acceptable," "satisfactory," or words of like import shall mean "approved by," or "acceptable to," or "satisfactory to" the Contracting Officer, unless otherwise expressly stated.

(c) Where "as shown," "as indicated," "as detailed," or words of similar import are used, it shall be understood that the reference is made to the drawings accompanying this contract unless stated otherwise. The word "provided" as used herein shall be understood to mean "provide complete in place," that is "furnished and installed."

(d) Shop drawings means drawings, submitted to the Government by the Contractor, subcontractor, or any lower tier subcontractor pursuant to a construction contract, showing in detail

(1) the proposed fabrication and assembly of structural elements, and

(2) the installation (i.e., fit, and attachment details) of materials or equipment. It includes drawings, diagrams, layouts, schematics, descriptive literature, illustrations, schedules, performance and test data, and similar materials furnished by the Contractor to explain in detail specific portions of the work required by the contract. The Government may duplicate, use, and disclose in any manner and for any purpose shop drawings delivered under this contract.

(e) If this contract requires shop drawings, the Contractor shall coordinate all such drawings, and review them for accuracy, completeness, and compliance with contract requirements and shall indicate its approval thereon as evidence of such coordination and review. Shop drawings submitted to the Contracting Officer without evidence of the Contractor's approval may be returned for resubmission. The Contracting Officer will indicate an approval or disapproval of the shop drawings and if not approved as submitted shall indicate the Government's reasons therefor. Any work done before such approval shall be at the Contractor's risk. Approval by the Contracting Officer shall not relieve the Contractor from responsibility for any errors or omissions in such drawings, nor from responsibility for complying with the requirements of this contract, except with respect to variations described and approved in accordance with (f) below.

(f) If shop drawings show variations from the contract requirements, the Contractor shall describe such variations in writing, separate from the drawings, at the time of submission. If the Contracting Officer approves any such variation, the Contracting Officer shall issue an appropriate contract modification, except that, if the variation is minor or does not involve a change in price or in time of performance, a modification need not be issued.

(g) The Contractor shall submit to the Contracting Officer for approval four copies (unless otherwise indicated) of all shop drawings as called for under the various headings of these specifications. Three sets (unless otherwise indicated) of all shop drawings, will be retained by the Contracting Officer and one set will be returned to the Contractor.

106. *FAR 52.236-26 PRECONSTRUCTION CONFERENCE (FEB 1995)

If the Contracting Officer decides to conduct a preconstruction conference, the successful offeror will be notified and will be required to attend. The Contracting Officer's notification will include specific details regarding the date, time, and location of the conference, any need for attendance by subcontractors, and information regarding the items to be discussed.

107. DFARS 252.236-7000 MODIFICATION OF PROPOSALS - PRICE BREAKDOWN (DEC 1991)

(a) The Contractor shall furnish a price breakdown, itemized as required and within the time specified by the Contracting Officer, with any proposal for a contract modification.

(b) The price breakdown--

(1) Must include sufficient detail to permit an analysis of profit, and of all costs for--

(i) Material;

(ii) Labor,

(iii) Equipment;
(iv) Subcontracts; and

(2) Most cover all work involved in the modification, whether the work was deleted, added, or changed.

(c) The Contractor shall provide similar price breakdowns to support any amounts claimed for subcontracts.

(d) The Contractor's proposal shall include a justification for any time extension proposed.

108. DFARS 252.236-7008 CONTRACT PRICES - BIDDING SCHEDULES (DEC 1991)

(a) The Government's payment for the items listed in the Bidding Schedule shall constitute full compensation to the Contractor for--

(1) Furnishing all plant, labor, equipment, appliances, and materials; and

(2) Performing all operations required to complete the work in conformity with the drawings and specifications.

(b) The Contractor shall include in the prices for the items listed in the Bidding Schedule all costs for work in the specifications, whether or not specifically listed in the Bidding Schedule.

109. *FAR 52.242-13 BANKRUPTCY (JUL 1995)

In the event the Contractor enters into proceedings relating to bankruptcy, whether voluntary or involuntary, the Contractor agrees to furnish, by certified mail or electronic commerce method authorized by the contract, written notification of the bankruptcy to the Contracting Officer responsible for administering the contract. This notification shall be furnished within five days of the initiation of the proceedings relating to bankruptcy filing. This notification shall include the date on which the bankruptcy petition was filed, the identity of the court in which the bankruptcy petition was filed, and a listing of Government contract numbers and contracting offices for all Government contracts against which final payment has not been made. This obligation remains in effect until final payment under this contract.

110. *FAR 52.242-14 SUSPENSION OF WORK (APR 1984)

(a) The Contracting Officer may order the Contractor, in writing, to suspend, delay, or interrupt all or any part of the work of this contract for the period of time that the Contracting Officer determines appropriate for the convenience of the Government.

(b) If the performance of all or any part of the work is, for an unreasonable period of time, suspended, delayed, or interrupted (1) by an act of the Contracting Officer in the administration of this contract, or (2) by the Contracting Officer's failure to act within the time specified in this contract (or within a reasonable time if not specified), an adjustment shall be made for any increase in the cost of performance of this contract (excluding profit) necessarily caused by the unreasonable suspension, delay, or interruption, and the contract modified in writing accordingly. However, no adjustment shall be made under this clause for any suspension, delay, or interruption to the extent that performance would have been so suspended, delayed, or interrupted by any other cause, including the fault or negligence of the Contractor, or for which an equitable adjustment is provided for or excluded under any other term or condition of this contract.

(c) A claim under this clause shall not be allowed (1) for any costs incurred more than 20 days before the Contractor shall have notified the Contracting Officer in writing of the act or failure to act involved (but this requirement shall not apply as to a claim resulting from a suspension order), and (2) unless the claim, in an amount stated, is asserted in writing as soon as practicable after the termination of the suspension, delay, or interruption, but not later than the date of final payment under the contract.

111. FAR 52.243-4 CHANGES (AUG 1987)

(a) The Contracting Officer may, at any time, without notice to the sureties, if any, by written order designated or indicated to be a change order, make changes in the work within the general scope of the contract, including changes--

(1) In the specifications (including drawings and designs);
(2) In the method or manner of performance of the work;
(3) In the Government-furnished facilities, equipment, materials, services, or site; or
(4) Directing acceleration in the performance of the work.

(b) Any other written or oral order (which, as used in this paragraph (b), includes direction, instruction, interpretation, or determination) from the Contracting Officer that causes a change shall be treated as a change order under this clause; provided, that the Contractor gives the Contracting Officer written notice stating

(1) the date, circumstances, and source of the order and
(2) that the Contractor regards the order as a change order.

(c) Except as provided in this clause, no order, statement, or conduct of the Contracting Officer shall be treated as a change under this clause or entitle the Contractor to an equitable adjustment.

(d) If any change under this clause causes an increase or decrease in the Contractor's cost of, or the time required for, the performance of any part of the work under this contract, whether or not changed by any such order, the Contracting Officer shall make an equitable adjustment and modify the contract in writing. However, except for an adjustment based on defective specifications, no adjustment for any change under paragraph (b) of this clause shall be made for any costs incurred more than 20 days before the Contractor gives written notice as required. In the case of defective specifications for which the Government is responsible, the equitable adjustment shall include any increased cost reasonably incurred by the Contractor in attempting to comply with the defective specifications.

(e) The Contractor must assert its right to an adjustment under this clause within 30 days after

(1) receipt of a written change order under paragraph (a) of this clause or
(2) the furnishing of a written notice under paragraph (b) of this clause, by submitting to the Contracting Officer a written statement describing the general nature and amount of the proposal, unless this period is extended by the Government. The statement of proposal for adjustment may be included in the notice under paragraph (b) above.

(f) No proposal by the Contractor for an equitable adjustment shall be allowed if asserted after final payment under this contract.

112. DFARS 252.243-7001 PRICING OF CONTRACT MODIFICATIONS (DEC 1991)

When costs are a factor in any price adjustment under this contract, the contract cost principles and procedures in FAR Part 31 and DFARS Part 231, in effect on the date of this contract, apply.

113. DFARS 252.243-7002 REQUESTS FOR EQUITABLE ADJUSTMENT (MAR 1998)

(a) The amount of any request for equitable adjustment to contract terms shall accurately reflect the contract adjustment for which the Contractor believes the Government is liable. The request shall include only costs for performing the change, and shall not include any costs that already have been reimbursed or that have been separately claimed. All indirect costs included in the request shall be properly allocable to the change in accordance with applicable acquisition regulations.

(b)In accordance with 10 U.S.C. 2410(a), any request for equitable adjustment to contract terms that exceeds the simplified acquisition threshold shall bear, at the time of submission, the following certificate executed by an individual authorized to certify the request on behalf of the Contractor:
I certify that the request is made in good faith, and that the supporting data are accurate and complete to the best of may knowledge and belief.

(Official's Name)

(Title)

(c) The certification in paragraph (b) of this clause requires full disclosure of all relevant facts, including--

(1) Cost or pricing data if required in accordance with subsection 15.403-4 of the Federal Acquisition Regulation; and

(2) Information other than cost or pricing data, in accordance with subsection 15.403-3 of the FAR, including actual cost data and data to support any estimated costs, even if cost or pricing data are not required.

(d) The certification requirement in paragraph (b) of this clause does not apply to----

(1) Requests for routine contract payments; for example, requests for payment for accepted supplies and services, routine vouchers under a cost-reimbursement type contract, or progress payment invoices; or

(2) Final adjustment under an incentive provision of the contract.

(End of clause)

114. *FAR 52.244-2 SUBCONTRACTS (AUG 1998)

(a) Definitions. As used in this clause--

"Approved purchasing system" means a Contractor's purchasing system that has been reviewed and approved in accordance with Part 44 of the Federal Acquistion Regulation (FAR).

"Consent of subcontract" means the Contracting Officer's written consent for the Contractor to enter into a particular subcontract.

"Subcontract," means any contract, as defined in FAR Subpart 2.1, entered into by a subcontractor to furnish supplies or sevices for performance of the the prime contract or a subcontract. It includes, but is not limited to purchase orders, and changes and modifications to purchase orders.

(b) This clause does not apply to subcontracts for special test equipment when the contract contains the clause at FAR 52.245-18, Special Test Equipment.

(c) When this clause is included in a fixed-price type contract, consent to subcontract is required only on unpriced contract actions (including unpriced modification or unpriced delivery orders), and only if required in accordance with paragraph (d) or (e) of this clause.

(d) If the Contractor does not have an approved purchasing system, consent to subcontract is required for any subcontract that--

(1) Is of the cost-reimbursement, time-and-materials, or labor-hour type; or

(2) Is fixed-price and exceeds--

(i) For a contract awarded by the Department of Defense, the Coast Guard, or the National Aeronautics and Space Administration, the greater of the simplified theshold or 5 percent of the total estimated cost of the contract; or

(ii) For a contract awarded by a civilian agency other that the Coast Guard and the National Aeronautics and Space Administration, either the the simplified theshold or 5 percent of the total estimated cost of the contract.

(e) If the Contractor has an approved purchasing system, the Contractor nevertheless shall obtain the Contracting Officer's written consent before placing the following subcontracts:

_____
_____
_____

(f)(1) The Contractor shall notify the Contracting Officer reasonably in advance of placing any subcontract or modification thereof for which consent is required under paragraph (c), (d), or (e) of this clause, including the following information:

(i) A description of the supplies or services to be subcontracted.
(ii) Identification of the type of subcontract to be used.
(iii) Identification of the proposed subcontractor.
(iv) The proposed subcontract price.
(v) The subcontractor's current, complete, and accurate cost or pricing data and Certificate of Current Cost or Pricing Data, if required by other contract provisions.
(vi) The subcontractor's Disclosure Statement or Certificate relating to Cost Accounting Standards when such data are required by other provisions of this contract.
(vii) A negotiation memorandum reflecting--
(A) The principal elements of the subcontract price negotiations;
(B) The most significant considerations controlling establishment of initial or revised prices;
(C) The reason cost or pricing data were or were not required;
(D) The extent, if any, to which the Contractor did not rely on the subcontractor's cost or pricing data in determining the price objective and in negotiating the final price;
(E) The extent to which it was recognized in the negotiation that the subcontractor's cost or pricing data were not accurate, complete, or current; the action taken by the Contractor and subcontractor; and the effect of any such defective data on the total price negotiated;
(F) The reasons for any significant difference between the Contractor's price objective and the price negotiated; and
(G) A complete explanation of the incentive fee or profit plan when incentives are used. The explanation shall identify each critical performance element, management decisions used to quantify each incentive element, reasons for the incentives, and a summary of all trade-off possibilities considered.

(2) The Contractor is not required to notify the Contracting Officer in advance of entering into any subcontract for which consent is not required under paragraph (c), (d), or (e) of this clause.

(g) Unless the consent or approval specifically provides otherwise, neither consent by the Contracting Officer to any subcontract nor approval of the Contractor's purchasing system shall constitute a determination--
(1) Of the acceptability of any subcontract terms or conditions;
(2) Of the acceptability of any cost under this contract; or
(3) To relieve the Contractor of any responsibility for performing this contract.

(h) No subcontract or modification thereof placed under this contract shall provide for payment on a cost-plus-a-percentage-of-cost basis, and any fee payable under cost-reimbursement subcontracts shall not exceed the fee limitations in FAR 15.404-4(c)(4)(i).

(i) The Contractor shall give the Contracting Officer immediate written notice of any action or suit filed and prompt notice of any claim made against the Contractor by any subcontractor or vendor that, in the opinion of the Contractor, may result in litigation related in any way to this contract, with respect to which the Contractor may be entitled to reimbursement by the Government.

(j) The Government reserves the right to review the Contractor's purchasing system as set forth in FAR Subpart 44.3.

(k) Paragraphs (d) and (f) of this clause do not apply to the following subcontracts, which ere evaluated during negotiations:

_____
_____
_____
(End of clause)

115. FAR 52.244-6 SUBCONTRACTS FOR COMMERCIAL ITEMS (APR 2003)

(a) *Definitions.* As used in this clause—

"Commercial item" has the meaning contained in the clause at 52.202-1, Definitions.
"Subcontract" includes a transfer of commercial items between divisions, subsidiaries, or affiliates of the Contractor or subcontractor at any tier.
(b) To the maximum extent practicable, the Contractor shall incorporate, and require its subcontractors at all tiers to incorporate, commercial items or nondevelopmental items as components of items to be supplied under this contract.
(c)(1) The Contractor shall insert the following clauses in subcontracts for commercial items:
(i) 52.219-8, Utilization of Small Business Concerns (Oct 2000) (15 U.S.C. 637(d)(2) and (3)), in all subcontracts that offer further subcontracting opportunities. If the subcontract (except subcontracts to small business concerns) exceeds $500,000 ($1,000,000 for construction of any public facility), the subcontractor must include 52.219-8 in lower tier subcontracts that offer subcontracting opportunities.
(ii) 52.222-26, Equal Opportunity (Apr 2002) (E.O. 11246).
(iii) 52.222-35, Equal Opportunity for Special Disabled Veterans, Veterans of the Vietnam Era, and Other Eligible Veterans (Dec 2001) (38 U.S.C. 4212(a));
(iv) 52.222-36, Affirmative Action for Workers with Disabilities (June 1998) (29 U.S.C. 793).
(v) 52.247-64, Preference for Privately Owned U.S.-Flag Commercial Vessels (APR 2003) (46 U.S.C. Appx 1241 and 10 U.S.C. 2631) (flow down required in accordance with paragraph (d) of FAR clause 52.247-64).
(2) While not required, the Contractor may flow down to subcontracts for commercial items a minimal number of additional clauses necessary to satisfy its contractual obligations.
(d) The Contractor shall include the terms of this clause, including this paragraph (d), in subcontracts awarded under this contract.
(End of clause)

116. *FAR 52.245-2 GOVERNMENT PROPERTY (FIXED-PRICE CONTRACTS) (JUNE 2003) [<u>For Government Property over $100,000</u>]

(a) Government-furnished property.
(1) The Government shall deliver to the Contractor, for use in connection with and under the terms of this contract, the Government-furnished property described in the Schedule or specifications together with any related data and information that the Contractor may request and is reasonably required for the intended use of the property (hereinafter referred to as "Government-furnished property").
(2) The delivery or performance dates for this contract are based upon the expectation that Government-furnished property suitable for use (except for property furnished "as is") will be delivered to the Contractor at the times stated in the Schedule or, if not so stated, in sufficient time to enable the Contractor to meet the contract's delivery or performance dates.
(3) If Government-furnished property is received by the Contractor in a condition not suitable for the intended use, the Contractor shall, upon receipt of it, notify the Contracting Officer, detailing the facts, and, as directed by the Contracting Officer and at Government expense, either repair, modify, return, or otherwise

dispose of the property. After completing the directed action and upon written request of the Contractor, the Contracting Officer shall make an equitable adjustment as provided in paragraph (h) of this clause.

(4) If Government-furnished property is not delivered to the Contractor by the required time, the Contracting Officer shall, upon the Contractor's timely written request, make a determination of the delay, if any, caused the Contractor and shall make an equitable adjustment in accordance with paragraph (h) of this clause.

(b) Changes in Government-furnished property.

(1) The Contracting Officer may, by written notice,

(i) decrease the Government-furnished property provided or to be provided under this contract, or

(ii) substitute other Government-furnished property for the property to be provided by the Government, or to be acquired by the Contractor for the Government, under this contract. The Contractor shall promptly take such action as the Contracting Officer may direct regarding the removal, shipment, or disposal of the property covered by such notice.

(2) Upon the Contractor's written request, the Contracting Officer shall make an equitable adjustment to the contract in accordance with paragraph (h) of this clause, if the Government has agreed in the Schedule to make the property available for performing this contract and there is any--

(i) Decrease or substitution in this property pursuant to subparagraph (b)(1) above; or

(ii) Withdrawal of authority to use this property, if provided under any other contract or lease.

(c) Title in Government property.

(1) The Government shall retain title to all Government-furnished property.

(2) All Government-furnished property and all property acquired by the Contractor, title to which vests in the Government under this paragraph (collectively referred to as "Government property"), are subject to the provisions of this clause. However, special tooling accountable to this contract is subject to the provisions of the Special Tooling clause and is not subject to the provisions of this clause. Title to Government property shall not be affected by its incorporation into or attachment to any property not owned by the Government, nor shall government property become a fixture or lose its identity as personal property by being attached to any real property.

(3) Title to each item of facilities and special test equipment acquired by the Contractor for the Government under this contract shall pass to and vest in the Government when its use in performing this contract commences or when the Government has paid for it, whichever is earlier, whether or not title previously vested in the Government.

(4) If this contract contains a provision directing the Contractor to purchase material for which the Government will reimburse the Contractor as a direct item of cost under this contract--

(i) Title to material purchased from a vendor shall pass to and vest in the Government upon the vendor's delivery of such material; and

(ii) Title to all other material shall pass to and vest in the Government upon--

(A) Issuance of the material for use in contract performance;

(B) Commencement of processing of the material or its use in contract performance; or

(C) Reimbursement of the cost of the material by the Government, whichever occurs first.

(d) Use of Government property. The Government property shall be used only for performing this contract, unless otherwise provided in this contract or approved by the Contracting Officer.

(e) Property Administration.

(1) The Contractor shall be responsible and accountable for all Government property provided under this contract and shall comply with Federal Acquisition Regulation (FAR) Subpart 45.5, as in effect on the date of this contract.

(2) The Contractor shall establish and maintain a program for the use, maintenance, repair, protection, and preservation of Government property in accordance with sound industrial practice and the applicable provisions of Subpart 45.5 of the FAR.

(3) If damage occurs to Government property, the risk of which has been assumed by the Government under this contract, the Government shall replace the items or the Contractor shall make such repairs as

the Government directs. However, if the Contractor cannot effect such repairs within the time required, the Contractor shall dispose of the property as directed by the Contracting Officer. When any property for which the Government is responsible is replaced or repaired, the Contracting Officer shall make an equitable adjustment in accordance with paragraph (h) of this clause.

(4) The Contractor represents that the contract price does not include any amount for repairs or replacement for which the Government is responsible. Repair or replacement of property for which the Contractor is responsible shall be accomplished by the Contractor at its own expense.

(f) Access. The Government and all its designees shall have access at all reasonable times to the premises in which any Government property is located for the purpose of inspecting the Government property.

(g) Risk of loss. Unless otherwise provided in this contract, the Contractor assumes the risk of, and shall be responsible for, any loss or destruction of, or damage to, Government property upon its delivery to the Contractor or upon passage of title to the Government under paragraph (c) of this clause. However, the Contractor is not responsible for reasonable wear and tear to Government property or for Government property properly consumed in performing this contract.

(h) Equitable adjustment. When this clause specifies an equitable adjustment, it shall be made to any affected contract provision in accordance with the procedures of the Changes clause. When appropriate, the Contracting Officer may initiate an equitable adjustment in favor of the Government. The right to an equitable adjustment shall be the Contractor's exclusive remedy. The Government shall not be liable to suit for breach of contract for--

(1) Any delay in delivery of Government-furnished property;

(2) Delivery of Government-furnished property in a condition not suitable for its intended use;

(3) A decrease in or substitution of Government-furnished property; or

(4) Failure to repair or replace Government property for which the Government is responsible.

(i) Final accounting and disposition of Government property. Upon completing this contract, or at such earlier dates as may be fixed by the Contracting Officer, the Contractor shall submit, in a form acceptable to the Contracting Officer, inventory schedules covering all items of Government property (including any resulting scrap) not consumed in performing this contract or delivered to the Government. The Contractor shall prepare for shipment, deliver f.o.b. origin, or dispose of the Government property as may be directed or authorized by the Contracting Officer. The net proceeds of any such disposal shall be credited to the contract price or shall be paid to the Government as the Contracting Officer directs.

(j) Abandonment and restoration of Contractor's premises. Unless otherwise provided herein, the Government--

(1) May abandon any Government property in place, at which time all obligations of the Government regarding such abandoned property shall cease; and

(2) Has no obligation to restore or rehabilitate the Contractor's premises under any circumstances (e.g., abandonment, disposition upon completion of need, or upon contract completion). However, if the Government-furnished property (listed in the Schedule or specifications) is withdrawn or is unsuitable for the intended use, or if other Government property is substituted, then the equitable adjustment under paragraph (h) of this clause may properly include restoration or rehabilitation costs.

(k) Communications. All communications under this clause shall be in writing.

(l) Overseas contracts. If this contract is to be performed outside of the United States of America and its outlying areas, the words "Government" and "Government-furnished" (wherever they appear in this clause) shall be construed as "United States Government" and "United States Government-furnished," respectively.

117. *FAR 52.245-4 GOVERNMENT-FURNISHED PROPERTY (SHORT FORM) (JUNE 2003) [For Government Property $100,000 or Less]

(a) The Government shall delivery to the Contractor, at the time and locations stated in this contract, the Government-furnished property described in the Schedule or specifications. If that property, suitable for its intended use, is not delivered to the Contractor, the Contracting Officer shall equitably adjust affected provisions of this contract in accordance with the Changed clause when--

(1) The Contractor submits a timely written request for an equitable adjustment; and

(2) The facts warrant an equitable adjustment.

(b) Title to Government-furnished property shall remain in the Government. The Contractor shall use the Government-furnished property only in connection with this contract. The Contractor shall maintain adequate property control records in accordance with sound industrial practice and will make such records available for Government inspection at all reasonable times, unless the clause at Federal Acquisition Regulation 52.245-1, Property Records, is included in this contract.

(c) Upon delivery of Government-furnished property to the Contractor, the Contractor assumes the risk and responsibility for its loss or damage, except--

(1) For reasonable wear and tear;

(2) To the extent property is consumed in performing this contract; or

(3) As otherwise provided for by the provisions of this contract.

(d) Upon completing this contract, the Contractor shall follow the instructions of the Contracting Officer regarding the disposition of all Government-furnished property not consumed in performing this contract or previously delivered to the Government. The Contractor shall prepare for shipment, deliver f.o.b. origin, or dispose of the Government property, as may be directed or authorized by the Contracting Officer. The net proceeds of any such disposal shall be credited to the contract price or shall be paid to the Government as directed by the Contracting Officer.

(e) If this contract is to be performed outside the United States of America and its outlying areas, the words "Government" and "Government-furnished" (wherever they appear in this clause) shall be construed as "United States Government" and "United States Government-furnished," respectively.

118. *FAR 52.246-12 INSPECTION OF CONSTRUCTION (AUG 1996)

(a) Definition. "Work" includes, but is not limited to, materials, workmanship, and manufacture and fabrication of components.

(b) The Contractor shall maintain an adequate inspection system and perform such inspections as will ensure that the work performed under the contract conforms to contract requirements. The Contractor shall maintain complete inspection records and make them available to the Government. All work shall be conducted under the general direction of the Contracting Officer and is subject to Government inspection and test at all places and at all reasonable times before acceptance to ensure strict compliance with the terms of the contract.

(c) Government inspections and tests are for the sole benefit of the Government and do not--

(1) Relieve the Contractor of responsibility for providing adequate quality control measures;

(2) Relieve the Contractor of responsibility for damage to or loss of the material before acceptance;

(3) Constitute or imply acceptance; or

(4) Affect the continuing rights of the Government after acceptance of the completed work under paragraph (i) below.

(d) The presence or absence of a Government inspector does not relieve the Contractor from any contract requirement, nor is the inspector authorized to change any term or condition of the specification without the Contracting Officer's written authorization.

(e) The Contractor shall promptly furnish, at no increase in contract price, all facilities,labor, and material reasonably needed for performing such safe and convenient inspections and tests as may be required by the Contracting Officer. The Government may charge to the Contractor any additional cost of inspection or test when work is not ready at the time specified by the Contractor for inspection or test, or when prior rejection makes reinspection or retest necessary. The Government shall perform all inspections and tests in a manner that will not unnecessarily delay the work. Special, full size, and performance tests shall be performed as described in the contract.

(f) The Contractor shall, without charge, replace or correct work found by the Government not to conform to contract requirements, unless in the public interest the Government consents to accept the work with an appropriate adjustment in contract price. The Contractor shall promptly segregate and remove rejected material from the premises.

(g) If the Contractor does not promptly replace or correct rejected work, the Government may

(1) by contract or otherwise, replace or correct the work and charge the cost to the Contractor or

(2) Terminate for default the Contractor's right to proceed.

(h) If, before acceptance of the entire work, the Government decides to examine already completed work by removing it or tearing it out, the Contractor, on request, shall promptly furnish all necessary facilities, labor, and material. If the work is found to be defective or nonconforming in any material respect due to the fault of the Contractor or its subcontractors, the Contractor shall defray the expenses of the examination and of satisfactory reconstruction. However, if the work is found to meet contract requirements, the Contracting Officer shall make an equitable adjustment for the additional services involved in the examination and reconstruction, including, if completion of the work was thereby delayed, an extension of time.

(i) Unless otherwise specified in the contract, the Government shall accept, as promptly as practicable after completion and inspection, all work required by the contract or that portion of the work the Contracting Officer determines can be accepted separately. Acceptance shall be final and conclusive except for latent defects, fraud, gross mistakes amounting to fraud, or the Government's rights under any warranty or guarantee.

119. *FAR 52.246-21 WARRANTY OF CONSTRUCTION (MAR 1994)

(a) In addition to any other warranties in this contract, the Contractor warrants, except as provided in paragraph (i) of this clause, that work performed under this contract conforms to the contract requirements and is free of any defect in equipment, material, or design furnished, or workmanship performed by the Contractor or any subcontractor or supplier at any tier.

(b) This warranty shall continue for a period of 1 year from the date of final acceptance of the work. If the Government takes possession of any part of the work before final acceptance, this warranty shall continue for a period of 1 year from the date the Government takes possession.

(c) The Contractor shall remedy at the Contractor's expense any failure to conform, or any defect. In addition, the Contractor shall remedy at the Contractor's expense any damage to Government-owned or controlled real or personal property, when that damage is the result of--

(1) The Contractor's failure to conform to contract requirements; or
(2) Any defect of equipment, material, workmanship, or design furnished.

(d) The Contractor shall restore any work damaged in fulfilling the terms and conditions of this clause. The Contractor's warranty with respect to work repaired or replaced will run for 1 year from the date of repair or replacement.

(e) The Contracting Officer shall notify the Contractor, in writing, within a reasonable time after the discovery of any failure, defect, or damage.

(f) If the Contractor fails to remedy any failure, defect, or damage within a reasonable time after receipt of notice, the Government shall have the right to replace, repair, or otherwise remedy the failure, defect, or damage at the Contractor's expense.

(g) With respect to all warranties, express or implied, from subcontractors, manufacturers, or suppliers for work performed and materials furnished under this contract, the Contractor shall--

(1) Obtain all warranties that would be given in normal commercial practice;

(2) Require all warranties to be executed, in writing, for the benefit of the Government, if directed by the Contracting Officer; and

(3) Enforce all warranties for the benefit of the Government, if directed by the Contracting Officer.

(h) In the event the Contractor's warranty under paragraph (b) of this clause has expired, the Government may bring suit at its expense to enforce a subcontractor's, manufacturer's, or supplier's warranty.

(i) Unless a defect is caused by the negligence of the Contractor or subcontractor or supplier at any tier, the Contractor shall not be liable for the repair of any defects of material or design furnished by the Government nor for the repair of any damage that results from any defect in Government-furnished material or design.

(j) This warranty shall not limit the Government's rights under the Inspection and Acceptance clause of this contract with respect to latent defects, gross mistakes, or fraud.

120. DFARS 252.247-7023 TRANSPORTATION OF SUPPLIES BY SEA (MAR 2000)

(a) Definitions.

As used in this clause--

(1) "Components" means articles, materials, and supplies incorporated directly into end products at any level of manufacture, fabrication, or assembly by the Contractor or any subcontractor.

(2) 'Department of Defense" (DOD) means the Army, Navy, Air Force, Marine Corps, and defense agencies.

(3) "Foreign flag vessel" means any vessel that is not a U.S.-flag vessel.

(4) "Ocean transportation" means any transportation aboard a ship, vessel, boat, barge, or ferry through international waters.

(5) "Subcontractor" means a supplier, materialman, distributor, or vendor at any level below the prime Contractor whose contractual obligation to perform results from, or is conditioned upon, award of the prime contract and who is performing any part of the work or other requirement of the prime contract.

(6) "Supplies" means all property, except land and interests in lard, that is clearly identifiable for eventual use by or owned by the DoD at the time of transportation by sea.

(i) An item is clearly identifiable for eventual use by the DoD if, for example, the contract documentation contains a reference to a DoD contract number or a military destination.

(ii) "Supplies" includes (but is not limited to) public works; buildings and facilities; ships; floating equipment and vessels of every character, type, and description, with parts, subassemblies, accessories, and equipment; machine tools; material; equipment; stores of all kinds; end items; construction materials; and components of the foregoing.

(7) "U.S.-flag vessel" means a vessel of the United States or belonging to the United States, including any vessel registered or having national status under the laws of the United States.

(b) (1) The Contractor shall use U.S. -flag vessels when transporting any supplies by sea under this contract.

(2) A subcontractor transporting supplies by sea under this contract shall use U.S.-flag vessel if--

(i) This Contract is a construction contract; or

(ii) The supplies being transported are-

(A) Noncommercial items; or

(B) Commercial items that-

(1) The Contractor is reselling or distributing to the Government without adding value (generally, the Contractor does not add value to items that it subcontracts for f.o.b. destination shipment);

(2) Are shipped in direct support of U.S. military contingency operations, exercises, or forces deployed in humanitarian or peacekeeping operations; or

(3) Are commissary or exchange cargoes transported outside of the Defense Transportation System in accordance with 10 U.S.C. 2643.

(c) The Contractor and its subcontractors may request that the Contracting Officer authorize shipment in foreign-flag vessels, or designate available U.S.-flag vessels, if the Contractor or a subcontractor believes that--

(1) U.S.-flag vessels are not available for timely shipment;

(2) The freight charges are inordinately excessive or unreasonable; or

(3) Freight charges are higher that charges to private persons for transportation of like goods.

(d) The Contractor must submit any request for use of other than U.S.-flag vessels in writing to the Contracting Officer at least 45 days prior to the sailing date necessary to meet its delivery schedules. The Contracting Officer will process requests submitted after such date(s) as expeditiously as possible, but the Contracting Officer's failure to grant approvals to meet the shipper's sailing date will not of itself constitute a compensable delay under this or any other clause of this contract. Requests shall contain at a minimum--

(1) Type, weight, and cube of cargo;
(2) Required shipping date:
(3) Special handling and discharge requirements;
(4) Loading and discharge points;
(5) Name of shipper and consignee;
(6) Prime contract number, and
(7) A documented description of efforts made to secure U.S.-flag vessels, including points of contact (with names and telephone numbers) with at least two U.S.-flag carriers contacted. Copies of telephone notes, telegraphic and facsimile message or letters will be sufficient for this purpose.

(e) The Contractor shall, within 30 days after each shipment covered by this clause, provide the Contracting Officer and the Division of National Cargo, Office of Market Development, Maritime Administration, U.S. Department of Transportation, Washington, DC 20590, one copy of the rated on board vessel operating carrier's ocean bill of lading, which shall contain the following information--

(1) Prime contract number;
(2) Name of vessel;
(3) Vessel flag of registry;
(4) Date of loading;
(5) Port of loading;
(6) Port of final discharge;
(7) Description of commodity;
(8) Gross weight in pounds and cubic feet if available;
(9) Total ocean freight in U.S. dollars; and
(10) Name of the steamship company.

(f) The Contractor agrees to provide with its final invoice under this contract a representation that to the best of its knowledge and belief--

(1) No ocean transportation was used in the performance of this contract;
(2) Ocean transportation was used and only U.S.-flag vessels were used for all ocean shipments under the contract;
(3) Ocean transportation was used, and the Contractor had the written consent of the Contracting Officer for all non-U.S.-flag ocean transportation; or
(4) Ocean transportation was used and some or all of the shipments were made on non-U.S.-flag vessels without the written consent of the Contracting Officer. The Contractor shall describe these shipments in the following format;

ITEM DESCRIPTION	CONTRACT LINE ITEMS	QUANTITY
TOTAL		

(g) If the final invoice does not include the required representation, the Government will reject and return it to the Contractor as an improper invoice for the purposes of the Prompt Payment clause of this contract. In the event there has been unauthorized use of non-U.S.-flag vessels in the performance of this contract, the Contracting Officer is entitled to equitably adjust the contract, based on the unauthorized use.

(h) The Contractor shall include this clause, including this paragraph (h) in all subcontracts under this contract that-

(1) Exceed the simplified acquistion threshold in Part 2 of the Federal Acquisition Regulation; and
(2) Are for a type of supplies described in paragraph (b) (2) of this clause.

121. DFARS 252.247-7024 NOTIFICATION OF TRANSPORTATION OF SUPPLIES BY SEA (MAR 2000)

(a) The Contractor has indicated by the response to the solicitation provision, Representation of Extent of Transportation by Sea, that it did not anticipate transporting by sea any supplies. If, however, after the award of this contract, the Contractor learns that supplies, as defined in the Transportation of Supplies by Sea clause of this contract, will be transported by sea, the Contractor--

(1) Shall notify the Contracting Officer of that fact; and

(2) Hereby agrees to comply with all the terms and conditions of the Transportation of Supplies by Sea clause of this contract.

(b) (1) The Contractor shall use U.S. -flag vessels when transporting any supplies by sea under this contract.

(2) A subcontractor transporting supplies by sea under this contract shall use U.S.-flag vessel if--

(i) This Contract is a construction contract; or

(ii) The supplies being transported are-

(A) Noncommercial items; or

(B) Commercial items that-

(1) The Contractor is reselling or distributing to the Government without adding value (generally, the Contractor does not add value to items that it subcontracts for f.o.b. destination shipment);

(2) Are shipped in direct support of U.S. military contingency operations, exercises, or forces deployed in humanitarian or peacekeeping operations; or

(3) Are commissary or exchange cargoes transported outside of the Defense Transportation System in accordance with 10 U.S.C. 2643.

122. FAR 52.248-3 VALUE ENGINEERING--CONSTRUCTION (FEB 2000) (ALERNATE I (APR 1984)

(a) General. The Contractor is encouraged to develop, prepare, and submit value engineering change proposals (VECP's) voluntarily. The Contractor shall share in any instant contract savings realized from accepted VECP's, in accordance with paragraph (f) of this clause.

(b) Definitions. "Collateral costs," as used in this clause, means agency costs of operation, maintenance, logistic support, or Government-furnished property.

"Collateral savings," as used in this clause, means those measurable net reductions resulting from a VECP in the agency's overall projected collateral costs, exclusive of acquisition savings, whether or not the acquisition cost changes.

"Contractor's development and implementation costs," as used in this clause, means those costs the Contractor incurs on a VECP specifically in developing, testing, preparing, and submitting the VECP, as well as those costs the Contractor incurs to make the contractual changes required by Government acceptance of a VECP.

"Government costs," as used in this clause, means those agency costs that result directly from developing and implementing the VECP, such as any net increases in the cost of testing, operations, maintenance, and logistic support. The term does not include the normal administrative costs of processing the VECP.

"Instant contract savings," as used in this clause, means the estimated reduction in Contractor cost of performance resulting from acceptance of the VECP, minus allowable Contractor's development and implementation costs, including subcontractors' development and implementation costs (see paragraph (h) of this clause).

"Value engineering change proposal (VECP)" means a proposal that--

(1) Requires a change to this, the instant contract, to implement; and

(2) Results in reducing the contract price or estimated cost without impairing essential functions or characteristics; provided, that it does not involve a change--

(i) In deliverable end item quantities only; or

(ii) To the contract type only.

(c) VECP preparation. As a minimum, the Contractor shall include in each VECP the information described in paragraphs (c) (1) through (7) of this clause. If the proposed change is affected by contractually required configuration management or similar procedures, the instructions in those procedures relating to format, identification, and priority assignment shall govern VECP preparation. The VECP shall include the following:

(1) A description of the difference between the existing contract requirement and that proposed, the comparative advantages and disadvantages of each, a justification when an item's function or characteristics are being altered, and the effect of the change on the end item's performance.

(2) A list and analysis of the contract requirements that must be changed if the VECP is accepted, including any suggested specification revisions.

(3) A separate, detailed cost estimate for

(i) the affected portions of the existing contract requirement and

(ii) the VECP. The cost reduction associated with the VECP shall take into account the Contractor's allowable development and implementation costs, including any amount attributable to subcontracts under paragraph (h) of this clause.

(4) A description and estimate of costs the Government may incur in implementing the VECP, such as test and evaluation and operating and support costs.

(5) A prediction of any effects the proposed change would have on collateral costs to the agency.

(6) A statement of the time by which a contract modification accepting the VECP must be issued in order to achieve the maximum cost reduction, noting any effect on the contract completion time or delivery schedule.

(7) Identification of any previous submissions of the VECP, including the dates submitted, the agencies and contract numbers involved, and previous Government actions, if known.

(d) Submission. The Contractor shall submit VECP's to the Resident Engineer at the worksite, with a copy to the Contracting Officer.

(e) Government action.

(1) The Contracting Officer will notify the Contractor of the status of the VECP within 45 calendar days after the contracting office receives it. If additional time is required, the Contracting Officer will notify the Contractor within the 45-day period and provide the reason for the delay and the expected date of the decision. The Government will process VECP's expeditiously; however, it will not be liable for any delay in acting upon a VECP.

(2) If the VECP is not accepted, the Contracting Officer will notify the Contractor in writing, explaining the reasons for rejection. The Contractor may withdraw any VECP, in whole or in part, at any time before it is accepted by the Government. The Contracting Officer may require that the Contractor provide written notification before undertaking significant expenditures for VECP effort.

(3) Any VECP may be accepted, in whole or in part, by the Contracting Officer's award of a modification to this contract citing this clause. The Contracting Officer may accept the VECP, even though an agreement on price reduction has not been reached, by issuing the Contractor a notice to proceed with the change. Until a notice to proceed is issued or a contract modification applied a VECP to this contract, the Contractor shall perform in accordance with the existing contract. The decision to accept or reject all or part of any VECP is a unilateral decision made solely at the discretion of the Contracting Officer.

(f) Sharing.

(1) Rates. The Government's share of savings is determined by subtracting Government costs from instant contract savings and multiplying the result by

(i) 45 percent for fixed-price contracts or

(ii) 75 percent for cost-reimbursement contracts.

(2) Payment. Payment of any share due the Contractor for use of a VECP on this contract shall be authorized by a modification to this contract to--

(i) Accept the VECP;

(ii) Reduce the contract price or estimated cost by the amount of instant contract savings; and

(iii) Provide the Contractor's share of savings by adding the amount calculated to the contract price or fee.

(g) Deleted.

(h) Subcontracts. The Contractor shall include an appropriate value engineering clause in any subcontract of $50,000 or more and may include one in subcontracts of lesser value. In computing any adjustment in this contract's price under paragraph (f) of this clause, the Contractor's allowable development and implementation costs clearly resulting from a VECP accepted by the Government under this contract, but shall exclude any value engineering incentive payments to a subcontractor. The Contractor may choose any arrangement for subcontractor value engineering incentive payments; provided, that these payments shall not reduce the Government's share of the savings resulting from the VECP.

(i) Data. The Contractor may restrict the Government's right to use any part of a VECP or the supporting data by marking the following legend on the affected parts:

"These data, furnished under the Value Engineering--Construction clause of contract - _____, shall not be disclosed outside the Government or duplicated, used, or disclosed, in whole or in part, for any purpose other than to evaluate a value engineering change proposal submitted under the clause. This restriction does not limit the Government's right to use information contained in these data if it has been obtained or is otherwise available from the Contractor or from another source without limitations."

If a VECP is accepted, the Contractor hereby grants the Government unlimited rights in the VECP and supporting data, except that, with respect to data qualifying and submitted as limited rights technical data, the Government shall have the rights specified in the contract modification implementing the VECP and shall appropriately mark the data. (The terms "unlimited rights" and "limited rights" are defined in Part 27 of the Federal Acquisition Regulation.)

(End of Clause)

123. *FAR 52.249-1 TERMINATION FOR CONVENIENCE OF THE GOVERNMENT (FIXED-PRICE) (SHORT FORM) (APR 1984) [For Contracts $100,000 or Less]

The Contracting Officer, by written notice, may terminate this contract, in whole or in part, when it is in the Government's interest. If this contract is terminated, the rights, duties, and obligations of the parties, including compensation to the Contractor, shall be in accordance with Part 49 of the Federal Acquisition Regulation in effect on the date of this contract.

124. *FAR 52.249-2 TERMINATION FOR CONVENIENCE OF THE GOVERNMENT (FIXED-PRICE) ALTERNATE I (SEP 1996) [For Contracts Over $100,000]

(a) The Government may terminate performance of work under this contract in whole or, from time to time, in part if the Contracting Officer determines that a termination is in the Government's interest. The Contracting Officer shall terminate by delivering to the Contractor a Notice of Termination specifying the extent of termination and the effective date.

(b) After receipt of a Notice of Termination, and except as directed by the Contracting Officer, the Contractor shall immediately proceed with the following obligations, regardless of any delay in determining or adjusting any amounts due under this clause:

(1) Stop work as specified in the notice.

(2) Place no further subcontracts or orders (referred to as subcontracts in this clause) for materials, services, or facilities, except as necessary to complete the continued portion of the contract.

(3) Terminate all subcontracts to the extent they relate to the work terminated.

(4) Assign to the Government, as directed by the Contracting Officer, all right, title, and interest of the Contractor under the subcontracts terminated, in which case the Government shall have the right to settle or to pay any termination settlement proposal arising out of those terminations.

(5) With approval or ratification to the extent required by the Contracting Officer, settle all outstanding liabilities and termination settlement proposals arising from the termination of subcontracts; the approval or ratification will be final for purposes of this clause.

(6) As directed by the Contracting Officer, transfer title and deliver to the Government

(i) the fabricated or unfabricated parts, work in process, completed work, supplies, and other material produced or acquired for the work terminated, and

(ii) the completed or partially completed plans, drawings, information, and other property that, if the contract had been completed, would be required to be furnished to the Government.

(7) Complete performance of the work not terminated.

(8) Take any action that may be necessary, or that the Contracting Officer may direct, for the protection and preservation of the property related to this contract that is in the possession of the Contractor and in which the Government has or may acquire an interest.

(9) Use its best efforts to sell, as directed or authorized by the Contracting Officer, any property of the types referred to in subparagraph (b) (6) of this clause; provided, however, that the Contractor

(i) is not required to extend credit to any purchaser and

(ii) may acquire the property under the conditions prescribed by, and at prices approved by, the Contracting Officer. The proceeds of any transfer or disposition will be applied to reduce any payments to be made by the Government under this contract, credited to the price or cost of the work, or paid in any other manner directed by the Contracting Officer.

(c) The Contractor shall submit complete termination inventory schedules no later than 120 days from the effective date of termination, unless extended in writing by the Contracting Officer upon written request of the Contractor within this 120-day period.

(d) After expiration of the plant clearance period as defined in Subpart 45.6 of the Federal Acquisition Regulation, the Contractor may submit to the Contracting Officer a list, certified as to quantity and quality, of termination inventory not previously disposed of, excluding items authorized for disposition by the Contracting Officer. The Contractor may request the Government to remove those items or enter into an agreement for their storage. Within 15 days, the Government will accept title to those items and remove them or enter into a storage agreement. The Contracting Officer may verify the list upon removal of the items, or if stored, within 45 days from submission of the list, and shall correct the list, as necessary, before final settlement.

(e) After termination, the Contractor shall submit a final termination settlement proposal to the Contracting Officer in the form and with the certification prescribed by the Contracting Officer. The Contractor shall submit the proposal promptly, but no later than 1 year from the effective date of termination, unless extended in writing by the Contracting Officer upon written request of the Contractor within this 1 year period. However, if the Contracting Officer determines that the facts justify it, a termination settlement proposal may be received and acted on after 1 year or any extension. If the Contractor fails to submit the proposal within the time allowed, the Contracting Officer may determine, on the basis of information available, the amount, if any, due the Contractor because of the termination and shall pay the amount determined.

(f) Subject to paragraph (e) of this clause, the Contractor and the Contracting Officer may agree upon the whole or any part of the amount to be paid because of the termination. The amount may include a reasonable allowance for profit on work done. However, the agreed amount, whether under this paragraph (f) or paragraph (g) of this clause, exclusive of costs shown in subparagraph (g)(3) of this clause, may not exceed the total contract price as reduced by (1) the amount of payments previously made and (2) the contract price of work not terminated. The contract shall be amended, and the Contractor paid the agreed amount. Paragraph (f) of this clause shall not limit, restrict, or affect the amount that may be agreed upon to be paid under this paragraph.

(g) If the Contractor and the Contracting Officer fail to agree on the whole amount to be paid the Contractor because of the termination of work, the Contracting Officer shall pay the Contractor the amounts determined as follows, but without duplication of any amounts agreed upon under paragraph (f) of this clause:

(1) For contract work performed before the effective date of the termination, the total (without duplication of any items) of--

(i) The cost of this work;

(ii) The cost of settling and paying termination settlement proposals under terminated subcontracts that are properly chargeable to the terminated portion of the contract if not included in subdivision (g)(1)(i) of this clause; and

(iii) A sum, as profit on subdivision (g)(1)(i) of this clause, determined by the Contracting Officer under 49.202 of the Federal Acquisition Regulation, in effect on the date of this contract, to be fair and reasonable; however, if it appears that the Contractor would have sustained a loss on the entire contract had it been completed, the Contracting Officer shall allow no profit under this subdivision (iii) and shall reduce the settlement to reflect the indicated rate of loss.

(2) The reasonable costs of settlement of the work terminated, including--

(i) Accounting, legal, clerical, and other expenses reasonably necessary for the preparation of termination settlement proposals and supporting data;

(ii) The termination and settlement of subcontracts (excluding the amounts of such settlements); and

(iii) Storage, transportation, and other costs incurred, reasonably necessary for the preservation, protection, or disposition of the termination inventory.

(h) Except for normal spoilage, and except to the extent that the Government expressly assumed the risk of loss, the Contracting Officer shall exclude from the amounts payable to the Contractor under paragraph (g) of this clause, the fair value, as determined by the Contracting Officer, of property that is destroyed, lost, stolen, or damaged so as to become undeliverable to the Government or to a buyer.

(i) The cost principles and procedures of Part 31 of the Federal Acquisition Regulation, in effect on the date of this contract, shall govern all costs claimed, agreed to, or determined under this clause.

(j) The Contractor shall have the right of appeal, under the Disputes clause, from any determination made by the Contracting Officer under paragraph (e), (g), or (l) of this clause, except that if the Contractor failed to submit the termination settlement proposal within the time provided in paragraph (e) or (l), respectively, and failed to request a time extension, there is no right of appeal.

(k) In arriving at the amount due the Contractor under this clause, there shall be deducted--

(1) All unliquidated advance or other payments to the Contractor under the terminated portion of this contract;

(2) Any claim which the Government has against the Contractor under this contract; and

(3) The agreed price for, or the proceeds of sale of, materials, supplies, or other things acquired by the Contractor or sold under the provisions of this clause and not recovered by or credited to the Government.

(l) If the termination is partial, the Contractor may file a proposal with the Contracting Officer for an equitable adjustment of the price(s) of the continued portion of the contract. The Contracting Officer shall make any equitable adjustment agreed upon. Any proposal by the Contractor for an equitable adjustment under this clause shall be requested within 90 days from the effective date of termination unless extended in writing by the Contracting Officer.

(m) (1) The Government may, under the terms and conditions it prescribes, make partial payments and payments against costs incurred by the Contractor for the terminated portion of the contract, if the Contracting Officer believes the total of these payments will not exceed the amount to which the Contractor will be entitled.

(2) If the total payments exceed the amount finally determined to be due, the Contractor shall repay the excess to the Government upon demand, together with interest computed at the rate established by the Secretary of the Treasury under 50 U.S.C. App. 1215(b)(2). Interest shall be computed for the period from the date the excess payment is received by the Contractor to the date the excess is repaid. Interest shall not be charged on any excess payment due to a reduction in the Contractor's termination settlement proposal because of retention or other disposition of termination inventory until 10 days after the date of the retention or disposition, or a later date determined by the Contracting Officer because of the circumstances.

(n) Unless otherwise provided in this contract or by statute, the Contractor shall maintain all records and documents relating to the terminated portion of this contract for 3 years after final settlement. This includes all books and other evidence bearing on the Contractor's costs and expenses under this contract. The Contractor shall make these records and documents available to the Government, at the Contractor's office, at all reasonable times, without any direct charge. If approved by the Contracting Officer, photographs, microphotographs, or other authentic reproductions may be maintained instead of original records and documents.

125. *FAR 52.249-10 DEFAULT (FIXED-PRICE CONSTRUCTION) (APR 1984)

(a) If the Contractor refuses or fails to prosecute the work or any separable part, with the diligence that will insure its completion within the time specified in this contract including any extension, or fails to complete the work within this time, the Government may, by written notice to the Contractor, terminate the right to proceed with the work (or the separable part of the work) that has been delayed. In this event, the Government may take over the work and complete it by contract or otherwise, and may take possession of and use any materials, appliances, and plant on the work site necessary for completing the work. The Contractor and its sureties shall be liable for any damage to the Government resulting from the Contractor's refusal or failure to complete the work within the specified time, whether or not the Contractor's right to proceed with the work is terminated. This liability includes any increased costs incurred by the Government in completing the work.

(b) The Contractor's right to proceed shall not be terminated nor the Contractor charged with damages under this clause, if-

(1) The delay in completing the work arises from unforeseeable causes beyond the control and without the fault or negligence of the Contractor. Examples of such causes include

(i) acts of God or of the public enemy,

(ii) acts of the Government in either its sovereign or contractual capacity,

(iii) acts of another Contractor in the performance of a contract with the Government,

(iv) fires,

(v) floods,

(vi) epidemics,

(vii) quarantine restrictions,

(viii) strikes,

(ix) freight embargoes,

(x) unusually severe weather, or

(xi) delays of subcontractors or suppliers at any tier arising from unforeseeable causes beyond the control and without the fault or negligence of both the Contractor and the subcontractors or suppliers; and

(2) The Contractor, within 10 days from the beginning of any delay (unless extended by the Contracting Officer), notifies the Contracting Officer in writing of the causes of delay. The Contracting Officer shall ascertain the facts and the extent of delay. If, in the judgment of the Contracting Officer, the findings of fact warrant such action, the time for completing the work shall be extended. The findings of the Contracting Officer shall be final and conclusive on the parties, but subject to appeal under the Disputes clause.

(c) If, after termination of the Contractor's right to proceed, it is determined that the Contractor was not in default, or that the delay was excusable, the rights and obligation s of the parties will be the same as if the termination had been issued for the convenience of the Government.

(d) The rights and remedies of the Government in this clause are in addition to any other rights and remedies provided by law or under this contract.

126. ENVIRONMENTAL LITIGATION (1974 NOV OCE)

(a) If the performance of all or any part of the work is suspended, delayed, or interrupted due to an order of a court of competent jurisdiction as a result of environmental litigation, as defined below, the Contracting Officer, at the request of the Contractor, shall determine whether the order is due in any part to the acts or omissions of the Contractor or a Subcontractor at any tier not required by the terms of this contract. If it is determined that the order is not due in any part to acts or omissions of the Contractor or a Subcontractor at any tier other than as required by the terms of this contract, such suspension, delay, or interruption shall be considered as if ordered by the Contracting Officer in the administration of this contract under the terms of the "Suspension of Work" clause of this contract. The period of such suspension, delay, or interruption shall be considered unreasonable, and an adjustment shall be made for any increase in the cost of performance of this contract (excluding profit) as provided in that clause, subject to all the provisions thereof.

(b) The term "environmental litigation," as used herein, means a lawsuit alleging that the work will have an adverse effect on the environment or that the Government has not duly considered, either substantively or procedurally, the effect of the work on the environment.

127. EFARS 52.249-5000 BASIS FOR SETTLEMENT OF PROPOSALS

Actual costs will be used to determine equipment cost for a settlement proposal submitted on the total cost basis under FAR 49.206-2(b). In evaluating a termination settlement proposal using the total cost basis, the following principles will be applied to determine allowable equipment costs:

(1) Actual costs for each piece of equipment, or groups of similar serial or series equipment, need not be available in the contractor's accounting records to determine total actual equipment costs.
(2) If equipment costs have been allocated to a contract using predetermined rates, those charges will be adjusted to actual costs.
(3) Recorded job costs adjusted for unallowable and unallocable expenses will be used to determine equipment operating expenses.
(4) Ownership costs (depreciation) will be determined using the contractor's depreciation schedule (subject to the provisions of FAR 31.205-11).
(5) License, taxes, storage and insurance costs are normally recovered as an indirect expense and unless the contractor charges these costs directly to contracts, they will be recovered through the indirect expense rate.

128. INAPPLICABLE PROVISIONS AND CLAUSES (Local Provision). [Applicable only for projects or delivery orders less than $100,000]

This provision applies only to delivery orders and projects less than $100,000.

Pursuant to Pub. L. 103-355, the following provisions and clauses, as noted below, are inapplicable to this contract:

(a) FAR 28.102-3, Miller Act requirements;
(b) Not Used;
(c) FAR 52.203-5, Covenant Against Contingent Fees;
(d) FAR 52.203-6, Restrictions on Subcontractor Sales to the Government;
(e) FAR 52.203-7, Anti-Kickback Procedures;
(f) FAR 52.222-4, Contract Work Hours and Safety Standards Act-Overtime Compensation; and
(g) FAR 52.223-6, Drug-Free Workplace, except for individuals.

DOCUMENT TABLE OF CONTENTS

DIVISION 00 - DOCUMENTS

SECTION 00800

SPECIAL CONTRACT REQUIREMENTS

5/00, Rev 8/03

PART 1 GENERAL

1.1 COMMENCEMENT, PROSECUTION, AND COMPLETION OF WORK (APR 1984)
1.1.1 Start Work
1.2 LIQUIDATED DAMAGES-CONSTRUCTION (SEPT 2000)
1.3 EXCEPTION TO COMPLETION TIME AND LIQUIDATED DAMAGES
1.4 CONTRACT DRAWINGS AND SPECIFICATIONS
1.4.1 SETS FURNISHED
1.4.2 DRAWING REPRODUCTION AND DISTRIBUTION
1.4.3 NOTIFICATION OF DISCREPANCIES
1.4.4 OMISSIONS
1.5 SUBMITTALS
1.6 PHYSICAL DATA (APR 1984)
1.7 CONCURRENT CONSTRUCTION
1.8 PAYMENT
1.8.1 PROMPT PAYMENT ACT
1.8.2 PAYMENTS FOR MODIFICATIONS
1.8.3 PAYMENT FOR MATERIALS DELIVERED OFFSITE (MAR 1995)
1.9 AVAILABILITY OF UTILITY SERVICES
1.10 DIGGING PERMITS AND ROAD CLOSINGS
1.11 TIME EXTENSIONS FOR UNUSUALLY SEVERE WEATHER
1.12 INSURANCE REQUIRED
1.13 SECURITY REQUIREMENTS
1.13.1 Contractor's Employee Identification
1.13.2 Contractor Employees Requiring Access to Automated Information Systems (AIS)
1.14 CONTRACTOR QUALITY CONTROL (CQC)
1.15 NONDOMESTIC CONSTRUCTION MATERIALS
1.16 NOTICE OF PRIORITY RATING FOR NATIONAL DEFENSE USE (SEP 1990)
1.17 DAILY WORK SCHEDULES AND WEEKLY COORDINATION MEETINGS
1.18 EQUIPMENT OWNERSHIP AND OPERATING EXPENSE SCHEDULE (MAR 1995)
1.19 AS-BUILT DRAWINGS
1.20 SIGN
1.21 CONTRACTOR FURNISHED EQUIPMENT DATA
1.22 ACCOMMODATIONS FOR GOVERNMENT INSPECTORS
1.23 SPECIAL INSTRUCTIONS FOR PROGRESS CHARTS
1.24 TIME EXTENSIONS (SEPT 2000)
1.25 PERFORMANCE OF WORK BY CONTRACTOR (APR 1984)
1.26 ASBESTOS AND LEAD
1.27 PROFIT
1.28 LABOR CONDITIONS APPLICABLE TO TEMPORARY FACILITIES
1.29 DRAWING SCALES
1.30 WAGE RATE APPLICATION
1.30.1 Building Schedule
1.30.2 Heavy and Highway Schedule
1.31 (FAR 52.222-23) NOTICE OF REQUIREMENT FOR AFFIRMATIVE ACTION TO

ENSURE EQUAL EMPLOYMENT OPPORTUNITY FOR CONSTRUCTION (FEB 1999))
1.32 FEDERAL HOLIDAYS

PART 2 NOT USED

PART 3 EXECUTION

3.1 APPENDIX A- CONTRACT DOCUMENT DISTRIBUTION LIST

-- End of Document Table of Contents --

SECTION 00800

SPECIAL CONTRACT REQUIREMENTS
5/00, Rev 8/03

PART 1 GENERAL

Attachments:
- Project Sign Details OD15-9A12 and OD15-9A22
- General Wage Decision Nos. MN030007 & MN030061
- Appendix A - Contract Document Distribution List

1.1 COMMENCEMENT, PROSECUTION, AND COMPLETION OF WORK (APR 1984)

The Contractor shall commence work under this contract within ten (10) calendar days after the date of receipt by him of Notice to Proceed, prosecute said work diligently, and complete the entire work except seeding ready for use not later than 360 calendar days after receipt of Notice to Proceed. The time stated for completion shall include final cleanup of the premises. (FAR 52.211-10)

1.1.1 Start Work

Evidence that the Contractor has started procurement of materials, preparation and submission of shop drawings, preparation of subcontracts, and other preparatory work will satisfy the requirement that work commence within ten (10) calendar days after receipt of Notice to Proceed. Therefore, work need not be commenced at the construction site within ten (10) calendar days.

1.2 LIQUIDATED DAMAGES-CONSTRUCTION (SEPT 2000)

(a) If the Contractor fails to complete the work within the time inserted on the BIDDING SCHEDULE and in Item 11 on page 00010-1 of Standard Form 1442, the Contractor shall pay liquidated damages to the Government in the amount of $800 for each calendar day of delay until the work is completed or accepted.

(b) If the Government terminates the Contractor's right to proceed, liquidated damages will continue to accrue until the work is completed. These liquidated damages are in addition to excess costs of repurchase under the Termination clause. (FAR 52.211-12)

1.3 EXCEPTION TO COMPLETION TIME AND LIQUIDATED DAMAGES

In case the Contracting Officer determines that seeding, sodding, and/or the specified maintenance thereof is not feasible during the construction period, such work will be excepted from the completion time and liquidated damages. This work shall be accomplished during the first seeding, sodding, period and the specified maintenance period following the completion date.

1.4 CONTRACT DRAWINGS AND SPECIFICATIONS

1.4.1 SETS FURNISHED

The contractor shall be responsible for making copies of specifications including amendments. The bid drawings as amended shall be utilized in the performance of the work until CD-ROM containing the contract drawings (i.e., bid drawings that have been posted with all amendment changes) are mailed to the Contractor. See paragraph below for contract drawing reproduction and distribution requirements. The work shall conform to the contract drawings, set out in the drawing index, all of which form a part of these specifications. The work shall also conform to the standard details bound or referenced herein.

1.4.2 DRAWING REPRODUCTION AND DISTRIBUTION

The Contractor shall reproduce multiple legible hard copy sets (half-size English unless directed otherwise) of contract drawings from Government provided CD-ROM containing read-only cal file drawings. Within 14 calendar days after receipt of CD-ROM containing read-only cal drawing files, the Contractor shall provide legible hard copy drawing sets to the addressees contained in the Contract Document Distribution List for Project in Appendix A to this specification. The Government will process no progress payments prior to receipt of the legible contract drawings. After receipt and distribution of the legible hard copy drawing sets, the Government will provide the Contractor with a CD-ROM containing editable CAD file drawings (format defined in Section 01040 AS-BUILT DRAWINGS). The Contractor shall prepare as-built drawings as defined in Section 01040 AS-BUILT DRAWINGS.

1.4.3 NOTIFICATION OF DISCREPANCIES

The Contractor shall check all CD-ROM drawing files furnished him immediately upon their receipt and shall promptly notify the Contracting Officer of any discrepancies. Dimensions marked on drawings shall be followed in lieu of scale measurements. Enlarged plans and details shall govern where the same work is shown at smaller scales. All scales shown are based on a standard drawing size of 28" x 40" . If any other size drawings are furnished or plotted the contractor shall adjust the scales accordingly. The Contractor shall also advise his sub-contractors of the above. The Contractor shall compare all drawings and verify the figures before laying out the work and will be responsible for any errors which might have been avoided thereby.

1.4.4 OMISSIONS

Omissions from the drawings or specifications or the misdescription of details of work which are manifestly necessary to carry out the intent of the drawings and specifications, or which are customarily performed, shall not relieve the Contractor from performing such omitted or misdescribed details of the work but they shall be performed as if fully and correctly set forth and described in the drawings and specifications.

1.5 SUBMITTALS

Government approval is required for submittals with a "G" designation; submittals not having a "G" designation are for information only. When used, a designation following the "G" designation identifies the office that will review the submittal for the Government. The following shall be submitted in accordance with Section 01330 SUBMITTAL PROCEDURES:

SD-02 Shop Drawings

Equipment Room Drawings; G-AO.

1.6 PHYSICAL DATA (APR 1984)

Data and information furnished or referred to below is for the Contractors' information. The Government shall not be responsible for any interpretation of or conclusion drawn from the data or information by the Contractor.

a. The indications of physical conditions on the drawings and in the specifications are the result of site investigations by surveys auger borings. The data shown graphically and by symbol for each respective boring represents the actual geologic features observed and logged at the location given on the drawings. While the borings are representative of subsurface conditions at their respective locations and for their respective vertical reaches, local minor variations characteristic of the subsurface materials of this region could occur.

b. Weather conditions shall have been investigated by the Contractor to satisfy himself as to the hazards likely to arise therefrom. Complete weather records and reports may be obtained from the local U.S. Weather Bureau.

c. Transportation facilities shall have been investigated by the Contractor to satisfy himself as to the existence of access highways and railroad facilities. (FAR 52.236-4)

1.7 CONCURRENT CONSTRUCTION

Construction work closely related to and/or located at the site of the work under a concurrent contract, including Phase Three, Consolidated Lodging, which is in the final stages of construction. This contract (Phase Four) is an extension of the Phase Three wing and will be in progress simultaneously with work under this contract. The location of this concurrent work is shown on the drawings or described in these specifications. The Contractor shall cooperate with others as necessary in the interest of timely completion of all work. In the event of interference, the Contracting Officer shall be notified immediately for resolution and his decision shall be final.

1.8 PAYMENT

1.8.1 PROMPT PAYMENT ACT

Pay requests authorized in CONTRACT CLAUSES clause: "Payments Under Fixed-Price Construction Contracts", will be paid pursuant to the clause, "Prompt Payment for Construction Contracts". Pay requests will be submitted on ENG Form 93 and 93a, "Payment Estimate-Contract Performance" and "Continuation". All information and substantiation required by the identified contract clauses will be submitted with the ENG Form 93, and the required certification will be included on the last page of the ENG Form 93a, signed by an authorized contractor official and dated when signed. The designated billing office is the Office of the Area Engineer.

1.8.2 PAYMENTS FOR MODIFICATIONS

Payments may be made for cost bearing change orders within the scope of the contract only to the extent funds are authorized in the order on a two-part modification. Contractor pricing proposed must be submitted at the

earliest possible time after the change order is issued, or at a specific time as directed by the Contracting Officer. At the discretion of the Contracting Officer, any and all payments may be withheld on the modification until the Contractor has submitted a qualifying price proposal, in as much detail as required by the Contracting Officer, and the final price has been agreed.

1.8.3 PAYMENT FOR MATERIALS DELIVERED OFFSITE (MAR 1995)

a. Pursuant to FAR clause 52.232-5, Payments Under Fixed Priced Construction Contracts, materials delivered to the contractor at locations other than the site of the work may be taken into consideration in making payments if included in payment estimates and if all the conditions of the General Provisions are fulfilled. Payment for items delivered to locations other than the work site will be limited to: (1) materials required by the technical provisions; or (2) materials that have been fabricated to the point where they are identifiable to an item of work required under this contract.

b. Such payment will be made only after receipt of paid or receipted invoices or invoices with canceled check showing title to the items in the prime contractor and including the value of material and labor incorporated into the item. Payment for materials delivered off-site includes petroleum products. (List additional items for which payments will be made for off-site delivery.) (EFAR 52.232-5000)

1.9 AVAILABILITY OF UTILITY SERVICES

All reasonably required amounts of domestic water and electricity will be made available to the Contractor by the Government from existing system outlets and supplies. The Contractor shall, at his own expense, make all temporary connections and install distribution lines. The Contractor shall furnish to the Contracting Officer a complete system layout drawing showing type of materials to be used and method of installation for all temporary electrical systems. The Contractor shall make arrangements with the Using Service, through the Contracting Officer, as to the method of determining the amount of water and electricity to be used by him and the method of payment therefore. All temporary lines shall be maintained by the Contractor in a workmanlike manner satisfactory to the Contracting Officer and shall be removed by the Contractor in like manner prior to final acceptance of the construction. Normal quantities of electricity and water used to make final tests of completely installed systems will be furnished by the Government.

1.10 DIGGING PERMITS AND ROAD CLOSINGS

The Contractor shall allow 14 calendar days from date of written application to receive permission to dig and to close roads. [Roads shall only be closed one lane at a time and vehicular traffic shall be allowed to pass through the construction area.] Work on or near roadways shall be flagged in accordance with the safety requirements in Safety and Health Requirements Manual EM 385-1-1, which forms a part of these specifications. Work located along the alert force route shall not cause blockage and the Contractor shall maintain unobstructed access for alert force traffic at all times.

1.11 TIME EXTENSIONS FOR UNUSUALLY SEVERE WEATHER

a. This clause specifies the procedure for the determination of

time extensions for unusually severe weather in accordance with the contract clause entitled "Default: (Fixed-Price Construction)." In order for the Contracting Officer to award a time extension under this clause, the following conditions must be satisfied:

(1) The weather experienced at the project site during the contract period must be found to be unusually severe, that is, more severe than the adverse weather anticipated for the project location during any given month.

(2) The unusually severe weather must actually cause a delay to the completion of the project. The delay must be beyond the control and without the fault or negligence of the contractor.

b. The following schedule of monthly anticipated adverse weather delays is based on National Oceanic and Atmospheric Administration (NOAA) or similar data for the project location and will constitute the base line for monthly weather time evaluations. The contractor's progress schedule must reflect these anticipated adverse weather delays in all weather dependent activities.

MONTHLY ANTICIPATED ADVERSE WEATHER DELAY
WORK DAYS BASED ON (5) DAY WORK WEEK

JAN	FEB	MAR	APR	MAY	JUN	JUL	AUG	SEP	OCT	NOV	DEC
(*)	(19)	(10)	(04)	(07)	(08)	(06)	(07)	(06)	(04)	(06)	(22)

* Anticipate losing entire month to adverse weather.

c. Upon acknowledgment of the Notice to Proceed (NTP) and continuing throughout the contract, the contractor will record on the daily CQC report, the occurrence of adverse weather and resultant impact to normally scheduled work. Actual adverse weather delay days must prevent work on critical activities for 50 percent or more of the contractor's scheduled work day. The number of actual adverse weather delay days shall include days impacted by actual adverse weather (even if adverse weather occurred in previous month), be calculated chronologically from the first to the last day of each month, and be recorded as full days. If the number of actual adverse weather delay days exceeds the number of days anticipated in paragraph b. above, the contracting officer will convert any qualifying delays to calendar days, giving full consideration for equivalent fair weather work days, and issue a modification in accordance with the contract clause entitled "Default (Fixed Price Construction)". (ER 415-1-15)

1.12 INSURANCE REQUIRED

In accordance with CONTRACT CLAUSES clause: "Insurance Work on a Government Installation," the Contractor shall procure the following minimum insurance:

Type	Amount
Workmen's Compensation and Employer's Liability Insurance	$100,000
General Liability Insurance	$500,000 per occurrence
Automobile Liability Insurance Bodily injury	$200,000 per person and $500,000 per occurrence

Property damage $ 20,000 per occurrence

(Coverages per FAR 28.307-2)

1.13 SECURITY REQUIREMENTS

1.13.1 Contractor's Employee Identification

The Contractor shall be responsible for furnishing to each employee and for requiring each employee engaged on the work to display such identification as may be approved and directed by the Contracting Officer. All prescribed identification shall immediately be delivered to the Contracting Officer, for cancellation upon release of any employees. When the contract involves work in restricted security areas, only employees who are U.S. citizens will be permitted to enter. Proof of U.S. citizenship is required prior to entry. When required by the Contracting Officer, the Contractor shall obtain and submit fingerprints of all persons employed or to be employed on the project. (Based on FAR 52.204-2)

1.13.2 Contractor Employees Requiring Access to Automated Information Systems (AIS)

All Contractor (and subcontractor) employees (U.S. citizens and Non- U.S. citizens) working under this contract (to include grants, cooperative agreements and task orders) who require access to Automated Information Systems (AIS), (stand alone computers, network computers/systems, e-mail) shall, at a minimum, be designated into an ADP-III position (non-sensitive) in accordance with DoD 5220-22-R, Industrial Security Regulation (http://www.deskbook.osd.mil/htmlfiles/DBY_dod-7-Careers.asp).

The investigative requirements for an ADP-III position are a favorable National Agency Check (NAC), SF-85P, Public Trust Position. SF-85P is available at: http://www.gsa.gov/Portal/home.jsp

Under "Key Information", click on "Federal Forms",
Click on "U.S. Government Forms (GSA, Standard and Optional)"
Click on "Standard (SF) Forms"
Click on "SF 85P Questionnaire for Public Trust Positions"
SF 85P is available in either Screen-Fillable FormNet Version or Adobe Acrobat version.

Proof of a favorable NAC shall be submitted to USACE, Omaha District Security Officer, ATTN: CENWO-SL, 106 S. 15th St, Omaha, NE 68102-1618, within three (3) working days after award of any contract or task order, and shall be submitted prior to the individual being permitted access to an AIS.

a. Contractors who have a commercial or government entity (CAGE) Code and Facility Security Clearance should submit forms through their Facility Security Office, who shall forward results of the NAC to the Omaha District Security Officer (address above).

b. For those contractors who do not have a CAGE Code or Facility Security Clearance, the SF 85-P and 2 copies of the FD-258 (Fingerprint Cards) shall be completed and submitted to the Omaha District Security Officer (address above.) These must be mailed or hand-delivered, as original signatures are required. Fingerprint cards are available upon request and may be taken to any local law enforcement center for completion. For those in the Omaha, Nebraska area, fingerprint cards may be completed by contacting the Omaha

District Human Resources Office, (402) 221-4072.

In accordance with Engineering Regulation, ER 380-1-18 (http://www.usace.army.mil/inet/usace-docs/eng-regs/er.htm), Section 4, foreign nationals who work on Corps of Engineers' contracts or task orders shall be approved by the HQUSACE Foreign Disclosure Officer or higher before beginning work on the contract/task order. This regulation includes subcontractor employees. (NOTE: exceptions to the above requirement include foreign nationals who perform janitorial and/or ground maintenance services.) The Contractor shall submit to the Omaha District Contracting Office, ATTN: (CENWO-CT) the names of all foreign nationals proposed for performance under this contract/task order, along with documentation to verify that he/she was legally admitted into the United States and has authority to work and/or go to school in the US. Such documentation may include a US passport, Certificate of US citizenship (INS Form N-560 or N-561), Certificate of Naturalization (INS Form N-550 or N-570), foreign passport with I-551 stamp or attached INS Form I-94 indicating employment authorization, Alien Registration Receipt Card with photograph (INS Form I-151 or I-551), Temporary Resident Card (INS Form I-688), Employment Authorization Card (INS Form I-688A), Reentry Permit (INS Form I-327), Refugee Travel Document (INS Form I-571), Employment Authorization Document issued by the INS which contains a photograph (INS Form I-688B). INS forms are available at http://www.immigration.gov/graphics/formsfee/index.htm.

Compliance with this provision is mandatory (only if AIS access is required). Offeror should check the appropriate box below and return with offer or quote to Contracting Office.

[ ] HAVE FAVORABLE SF-85P(s)*
[ ] SF85-P(s) TO BE INITIATED UPON AWARD
[ ] SF85-P(s) PAPERWORK IN PROGRESS
[ ] DO NOT INTEND TO COMPLY

*Must be accomplished for each employee who will be accessing Government AIS under this action.

(End of Provision)(PIL 2003-06, 19 Feb 03)

1.14 CONTRACTOR QUALITY CONTROL (CQC)

See Section 01451A Contractor Quality Control.

1.15 NONDOMESTIC CONSTRUCTION MATERIALS

The List of nondomestic construction materials or their components included in the list set forth in paragraph 25.104 of the Federal Acquisition Regulation does not apply to the requirements of the contract clause entitled "Buy American Act Construction Materials".

1.16 NOTICE OF PRIORITY RATING FOR NATIONAL DEFENSE USE (SEP 1990)

Any contract awarded as a result of this solicitation will be a DO rated order certified for national defense use under the Defense Priorities and Allocations System (DPAS) (15 CFR 700), and the Contractor will be required to follow all of the requirements of this regulation. (FAR 52.211-14)

1.17 DAILY WORK SCHEDULES AND WEEKLY COORDINATION MEETINGS

In order to closely coordinate work under this contract, the Contractor shall prepare a written agenda/meeting minutes and attend a weekly coordination meeting with the Contracting Officer and Using Service at which time the Contractor shall submit for coordination and approval, his proposed daily work schedule for the next two week period. The Contractor shall provide a copy of modifications (MODs), Serial Letters, Requests for Information (RFIs)and any other information that is needed in the minutes of the meeting. Required temporary utility services, time and duration of interruptions, and protection of adjoining areas shall be included with the Contractor's proposed 2-week work schedule. At this meeting, the Contractor shall also submit his schedule of proposed dates and times of all preparatory inspections to be performed during the next 2 weeks. Coordination action by the Contracting Officer relative to these schedules will be accomplished during these weekly meetings. Daily reports shall be completed and given to the Contracting Officer or Representative within 24 hours of work

1.18 EQUIPMENT OWNERSHIP AND OPERATING EXPENSE SCHEDULE (MAR 1995)

a. This statement shall become operative only for negotiated contracts where cost or pricing data is requested, and for modifications to sealed bid or negotiated contracts where cost or pricing data is requested. This clause does not apply to terminations. See 52.249-5000, Basis for settlement of proposals and FAR Part 49.

b. Allowable cost for construction and marine plant and equipment in sound workable condition owned or controlled and furnished by a Contractor or subcontractor at any tier shall be based on actual cost data for each piece of equipment or groups of similar serial and series for which the Government can determine both ownership and operating costs from the Contractor's accounting records. When both ownership and operating costs cannot be determined for any piece of equipment or groups of similar serial or series of equipment from the Contractor's accounting records, costs for that equipment shall be based upon the applicable provisions of EP 1110-1-8, "Construction Equipment Ownership and Operating Expense Schedule," Region IV. Copies of each regional schedule may be obtained through the following Internet site: http://www.usace.army.mil/inet/usace-docs/eng-pamphlets/ep.htm. Working conditions shall be considered to be average for determining equipment rates using the schedule unless specified otherwise by the Contracting Officer. For equipment not included in the schedule, rates for comparable pieces of equipment may be developed using the formula provided in the schedule. For forward pricing, the Schedule in effect at the time of negotiations shall apply. For retrospective pricing, the Schedule in effect at the time the work was performed shall apply.

c. Equipment rental costs are allowable, subject to the provisions of FAR 31.105(d)(ii) and FAR 31.205-36. Rates for equipment rented from an organization under common control, lease-purchase arrangements, and sale-leaseback arrangements will be determined using the schedule, except that actual rates will be used for equipment leased from an organization under common control that has an established practice of leasing the same or similar equipment to unaffiliated lessees.

d. When actual equipment costs are proposed and the total amount of the pricing action exceeds the small purchase threshold, the contracting officer shall request the contractor to submit either certified cost or pricing data, or partial/limited data as appropriate. The data shall be submitted on Standard Form 1411, Contract Pricing Proposal Cover Sheet.

(EFARS 52.231-5000)

1.19 AS-BUILT DRAWINGS

See SECTION 01040 - AS-BUILT DRAWINGS

1.20 SIGN

On commencement of work on this project, the Contractor shall furnish and erect the temporary sign in the location selected by the Contracting Officer near the project site. The Contractor shall maintain the sign in good condition through the project construction period. Upon completion of the project the Contractor shall remove the sign from the premises. The project sign shall conform to Standard Drawing OD15-9A12 and ODl5-9A22 bound herein. A decal of the "Engineer Castle" will be furnished the Contractor upon request.

1.21 CONTRACTOR FURNISHED EQUIPMENT DATA

See Section 01200 Warranty of Construction for Contractor Furnished Equipment Data to be submitted as part of the Warranty Equipment Booklet.

1.22 ACCOMMODATIONS FOR GOVERNMENT INSPECTORS

The Contractor shall furnish a temporary office facility approximately 10 feet x 20 feet with a minimum of 200 square feet of floor space. It shall be located where directed and shall be reserved for Government personnel only. Drinking water facilities, adequate lighting, local commercial telephone service, air-conditioning, heating equipment, and a partition enclosed chemical toilet shall be furnished and maintained by the Contractor. The office shall be furnished with one legal size filing cabinet with four drawers, one drafting table with stool, one plan rack, one desk, and three chairs. Used furniture, in good condition, will be acceptable. Entrance doors shall be equipped with a substantial lock. The Contractor shall provide janitor service, fuel for the heating facilities, electricity, telephone and water, all at no cost to the Government, except the Contractor will not be liable for Government long-distance calls. Building shall be constructed so as to be easily moved and the Contractor shall relocate the building twice during the contract, if so directed. The entire facility, including furniture, will remain the property of the Contractor and shall be removed from the site after completion of the work.

1.23 SPECIAL INSTRUCTIONS FOR PROGRESS CHARTS

To be submitted in accordance with the CONTRACT CLAUSES clause entitled "Schedule for Construction Contracts" shall indicate the required data for each of the principal features of the work. Contract changes or modifications will not include extensions of time unless the updated progress chart shows that the contract completion date is delayed due to the affect of the change on one or more principal features of the work.

1.24 TIME EXTENSIONS (SEPT 2000)

Time extensions for contract changes will depend upon the extent, if any, by which the changes cause delay in the completion of the various elements of construction. The change order granting the time extension may provide that the contract completion date will be extended only for those specific elements related to the changed work and that the remaining contract completion dates for all other portions of the work will not be altered.

The change order also may provide an equitable readjustment of liquidated damages under the new completion schedule. (FAR 52.211-13)

1.25 PERFORMANCE OF WORK BY CONTRACTOR (APR 1984)

The Contractor shall perform on the site, and with its own organization, work equivalent to at least twenty (20) percent of the total amount of work to be performed under the contract. This percentage may be reduced by a supplemental agreement to this contract if, during performing the work, the Contractor requests a reduction and the Contracting Officer determines that the reduction would be to the advantage of the Government. (FAR 52.236-1)

1.26 ASBESTOS AND LEAD

a. The Contractor is warned that inhalation of asbestos and lead has been associated with health hazards.

b. Asbestos-containing materials have been identified in area(s) where contract work is to be performed. All contract work activities where the potential exists for worker exposure to airborne asbestos fibers shall be performed in accordance with the requirements set forth in SECTION 13280A ASBESTOS ABATEMENT.

c. Lead has been determined to be present in some painted surfaces which are scheduled for removal/renovation. See SECTION 01400 for locations and proper procedures.

1.27 PROFIT

a. Weighted guidelines method of determining profit shall be used on any equitable adjustment change order or modification issued under this contract. The profit factors shall be as follows:

Factor	Rate	Weight	Value
Degree of Risk	20	See Item	
Relative difficulty of work	15	b. below	
Size of Job	15		
Period of performance	15		
Contractor's investment	5		
Assistance by Government	5		
Subcontracting	25		
	100		

b. Based on the circumstances of each procurement action, each of the above factors shall be weighted from .03 to .12 as indicated below. The value shall be obtained by multiplying the rate by the weight. The value column when totaled indicates the fair and reasonable profit percentage under the circumstances of the particular procurement.

(1) Degree of Risk. Where the work involves no risk or the degree of risk is very small, the weighting should be .03; as the degree of risk increases, the weighting should be increased up to a maximum of .12. Lump sum items will have, generally, a higher weighted value than the unit price items for which quantities are provided. Other things to consider: the portion of the work to be done by subcontractors, nature of work, where work is to be performed, reasonableness of negotiated costs, amount of

labor included in costs, and whether the negotiation is before or after performance of work.

(2) Relative Difficulty of Work. If the work is most difficult and complex, the weighting should be .12 and should be proportionately reduced to .03 on the simplest of jobs. This factor is tied in to some extent with the degree of risk. Some things to consider: the nature of the work, by whom it is to be done, where, and what is the time schedule.

(3) Size of Job. All work not in excess of $100,000 shall be weighted at .12. Work estimated between $100,000 and $5,000,000 shall be proportionately weighted from .12 to .05.

(4) Periods of Performance. Jobs in excess of 24 months are to be weighted at .12. Jobs of lesser duration are to be proportionately weighted to a minimum of .03 for jobs not to exceed 30 days. No weight where additional time not required.

(5) Contractor's Investment. To be weighted from .03 to .12 on the basis of below average, average, and above average. Things to consider: amount of subcontracting, mobilization payment item, Government furnished property, equipment and facilities, and expediting assistance.

(6) Assistance by Government. To be weighted from .12 to .03 on the basis of average to above average. Things to consider: use of Government-owned property, equipment and facilities, and expediting assistance.

(7) Subcontracting. To be weighted inversely proportional to the amount of subcontracting. Where 80 percent or more of the work is to be subcontracted, the weighting is to be .03 and such weighting proportionately increased to .12 where all the work is performed by the Contractor's own forces.

1.28 LABOR CONDITIONS APPLICABLE TO TEMPORARY FACILITIES

It is the position of the Department of Defense that the Davis-Bacon Act, 40 U.S.C. 276a is applicable to temporary facilities such as batch plants, sandpits, rock quarries, and similar operations, located off the immediate site of the construction but set up exclusively to furnish required materials for a construction project on the site of the work. Clause "Payrolls and Basic Records" of the CONTRACT CLAUSES is applicable to such operations.

1.29 DRAWING SCALES

All scales shown are based on a standard drawing size of 28" x 40". If any other size drawings are furnished or plotted, the contractor shall adjust the scales accordingly. The Contractor shall also advise his sub-contractors of the above.

1.30 WAGE RATE APPLICATION

For copies of Wage Rates, See Attachments GENERAL WAGE DECISIONS.

1.30.1 Building Schedule

Applicable to all work required within 5 feet outside the building lines.

1.30.2 Heavy and Highway Schedule

Applicable to all work required beyond 5 feet outside the building.

1.31 (FAR 52.222-23) NOTICE OF REQUIREMENT FOR AFFIRMATIVE ACTION TO ENSURE EQUAL EMPLOYMENT OPPORTUNITY FOR CONSTRUCTION (FEB 1999))

(a) The offeror's attention is called to the Equal Opportunity clause and the Affirmative Action Compliance Requirements for Construction clause of this solicitation.

(b) The goals for minority and female participation, expressed in percentage terms for the Contractor's aggregate workforce in each trade on all construction work in the covered area, are as follows:

Goals for Minority Participation for Each Trade	Goals for Female Participation for Each Trade
2.9	6.9

These goals are applicable to all the Contractor's construction work performed in the covered area. If the Contractor performs construction work in a geographical area located outside of the covered area, the Contractor shall apply the goals established for the geographical area where the work is actually performed. Goals are published periodically in the Federal Register in notice form, and these notices may be obtained from any Office of Federal Contract Compliance Programs Office.

(c) The Contractor's compliance with Executive Order 11246, as amended, and the regulations in 41 CFR 60-4 shall be based on (1) its implementation of the Equal Opportunity clause, (2) specific affirmative action obligations required by the clause entitled "Affirmative Action Compliance Requirements for Construction," and (3) its efforts to meet the goals. The hours of minority and female employment and training must be substantially uniform throughout the length of the contract, and in each trade. The Contractor shall make a good faith effort to employ minorities and women evenly on each of its projects. The transfer of minority or female employees or trainees from Contractor to Contractor, or from project to project, for the sole purpose of meeting the Contractor's goals shall be a violation of the contract, Executive Order 11246, as amended, and the regulations in 41 CFR 60-4. Compliance with the goals will be measured against the total work hours performed.

(d) The Contractor shall provide written notification to the Deputy Assistant Secretary for Federal Contract Compliance, U.S. Department of Labor, within 10 working days following award of any construction subcontract in excess of $10,000 at any tier for construction work under the contract resulting from this solicitation. The notification shall list the -

(1) Name, address, and telephone number of the subcontractor;

(2) Employer identification number of the subcontractor;

(3) Estimated dollar amount of the subcontract;

(4) Estimated starting and completion dates of the subcontract; and

(5) Geographical area in which the subcontract is to be performed.

(e) As used in this Notice, and in any contract resulting from this solicitation, the "covered area" is Minneapolis - St Paul SMSA-5120, which Hennepin county is a part of.

1.32 FEDERAL HOLIDAYS

The following Federal legal holidays are observed by this installation:

New Year's Day	1 January
Martin Luther King's Birthday	Third Monday in January
President's Day	Third Monday in February
Memorial Day	Last Monday in May
Independence Day	4 July
Labor Day	First Monday in September
Columbus Day	Second Monday in October
Veterans Day	11 November
Thanksgiving Day	Fourth Thursday in November
Christmas Day	25 December

If a wage determination applies the number of holidays specified on it, it has priority over this clause.

PART 2 NOT USED

PART 3 EXECUTION

3.1 APPENDIX A- CONTRACT DOCUMENT DISTRIBUTION LIST

-- End of Section --

This page was intentionally left blank for duplex printing.

General Decision Number MN030007

Superseded General Decision No. MN020007

State: Minnesota

Construction Type:
BUILDING

County(ies):

ANOKA	HENNEPIN	SCOTT
CARLTON	ITASCA	SHERBURNE
CARVER	KOOCHICHING	ST LOUIS
COOK	LAKE	WASHINGTON
DAKOTA	RAMSEY	

BUILDING CONSTRUCTION PROJECTS (Does not include Residential Construction projects consisting of single family homes and apartments up to and including 4 stories; Does not include Treatment Plants)

Modification Number	Publication Date
0	06/13/2003

COUNTY(ies):

ANOKA	HENNEPIN	SCOTT
CARLTON	ITASCA	SHERBURNE
CARVER	KOOCHICHING	ST LOUIS
COOK	LAKE	WASHINGTON
DAKOTA	RAMSEY	

ASBE0034C 06/01/2002

	Rates	Fringes
ANOKA, CARVER, DAKOTA, HENNEPIN, RAMSEY, SCOTT, SHERBURNE, AND WASHINGTON COUNTIES		
INSULATOR/ASBESTOS WORKERS (Includes application of all insulating materials, protective coverings, coatings & finishings to all types of mechanical systems)	29.59	12.34

ASBE0049B 06/01/2002

	Rates	Fringes
CARLTON, COOK, ITASCA, KOOCHICHING, LAKE & ST. LOUIS COUNTIES:		
ASBESTOS WORKERS/INSULATORS (Includes application of all insulating materials, protective coverings, coatings & finishings to all types of mechanical systems)	28.33	8.93

ASBE0205B 01/01/2002

	Rates	Fringes
ANOKA, BENTON, CARVER, DAKOTA, HENNEPIN, RAMSEY, SCOTT, SHERBURNE, STEARNS & WASHINGTON COUNTIES		
ASBESTOS REMOVAL WORKER/ HAZARDOUS MATERIAL HANDLER Includes preparation, wetting, stripping, removal, scrapping, vacuuming, bagging & disposing of all insulation materials from mechanical systems whether they contain asbestos or not	23.06	5.25

ASBE0205P 05/01/1998

	Rates	Fringes
CARLTON COOK, ITASCA, KOOCHICHING, LAKE, AND ST. LOUIS COUNTIES		
ASBESTOS REMOVAL WORKER / HAZARDOUS MATERIAL HANDLER Includes preparation, wetting, stripping, removal, scrapping, vacuuming, bagging and disposing of all insulation materials from mechanical systems whether they contain asbestos or not	19.72	3.69

ASBE0205R 01/01/2002

	Rates	Fringes
ANOKA, CARVER, DAKOTA, HENNEPIN, RAMSEY, SCOTT,SHERBURNE, AND WASHINGTON COUNTIES		
ASBESTOS REMOVAL WORKER/ HAZARDOUS MATERIAL HANDLER Includes preparation, wetting, stripping, removal, scrapping, vacuuming, bagging & disposing of all insulation materials from mechanical systems whether they contain asbestos or not	23.06	5.25

BOIL0647B 10/01/1999

	Rates	Fringes
BOILERMAKERS	23.35	9.71

BRMN0001A 05/01/2002

	Rates	Fringes
ANOKA, CARVER, DAKOTA, HENNEPIN, RAMSEY, SCOTT, SHERBURNE (City of Elk River) & WASHINGTON COUNTIES		
BRICKLAYERS & STONEMASONS	28.64	8.80

BRMN0001D 05/01/2002

	Rates	Fringes
MARBLE SETTERS	28.64	8.80

BRMN0001U 05/01/2002

	Rates	Fringes
TILE FINISHERS	23.90	7.55

BRMN0003B 05/01/2003

	Rates	Fringes
CARLTON, COOK, LAKE & ST. LOUIS (South of a line between Townships #54 & #55, 2 miles north of Cotton) COUNTIES:		
BRICKLAYERS	28.83	9.51

BRMN0003C 06/01/2002

	Rates	Fringes
CARLTON, COOK, LAKE & ST. LOUIS (City of Duluth and south of Township Line 55)		
TILE LAYERS	21.96	9.00

BRMN0015B 05/01/2002

	Rates	Fringes
KOOCHICHING COUNTY		
BRICKLAYERS	25.82	9.05

BRMN0015D 05/01/2002

	Rates	Fringes
KOOCHICHING COUNTY		
CEMENT MASONS	25.42	9.05

BRMN0016A 05/01/2002

	Rates	Fringes
ITASCA COUNTY		
BRICKLAYERS	25.11	11.20

BRMN1000G 05/01/2002

	Rates	Fringes
TERRAZZO MECHANICS	26.91	10.10
TERRAZZO BASE MACHINES	27.79	8.70
TERRAZZO FINISHERS	27.46	8.70

BRMN1001H 06/01/2002

	Rates	Fringes
ANOKA, CARVER, DAKOTA, HENNEPIN, ITASCA, KOOCHICHING, LAKE, RAMSEY, SCOTT, SHERBURNE, ST LOUIS (Except Duluth and South of Twp line 55), AND WASHINGTON COUNTIES		
TILE LAYERS	27.29	9.65

CARP0087D 05/01/2002

	Rates	Fringes
ANOKA, CARVER, DAKOTA, HENNEPIN, RAMSEY, SCOTT, SHERBURNE (Excluding St. Cloud & extending 5 miles beyond the city limits of St. Cloud) & WASHINGTON COUNTIES		
CARPENTERS, INSULATORS, AND PILEDRIVERMEN	28.66	7.88

CARP0087J 05/01/2002

	Rates	Fringes
ANOKA, CARVER, DAKOTA, HENNEPIN, RAMSEY, SCOTT, SHERBURNE AND WASHINGTON COUNTIES		
CARPENTERS & PILEDRIVERMEN (Site Preparation, Excavation and Incidental Paving)	26.17	9.80

CARP0190D 05/01/2002

	Rates	Fringes
ANOKA, CARVER, DAKOTA, HENNEPIN, RAMSEY, SCOTT, SHERBURNE, AND WASHINGTON COUNTIES		
LATHERS	27.52	9.04

CARP0361E 05/01/2001

	Rates	Fringes
CARLTON, COOK, LAKE (South part, excluding Sawbill Landing) & ST. LOUIS (Alborn, Arnold, Bartlett, Birch, Brookstone, Canyon, Clinton, Culver, Duluth, Floodwood, Gowan, Island, Kelsey, Lakewood, Meadowlands, Munger, Palmers, Payne, Prasit, Shaw & Taft) COUNTIES		
SOFT FLOOR LAYERS	19.73	9.63

CARP0361H 05/01/2001

	Rates	Fringes
CARLTON, COOK, ITASCA, KOOCHICHING, LAKE, & ST. LOUIS COUNTIES:		
LATHERS	20.82	9.00

CARP0361P 05/01/2002

	Rates	Fringes

ST LOUIS COUNTY (DULUTH)

CARPENTERS & PILEDRIVERMEN (Site Preparation, Excavation, and Incidental Paving)	22.91	10.96

CARP0361Q 05/01/2002

	Rates	Fringes
ST LOUIS COUNTY (Remainder)		
CARPENTERS & PILEDRIVERMEN (Site Preparation, Excavation, and Incidental Paving)	22.51	10.96

CARP0361R 05/01/2001

	Rates	Fringes
CARLTON, COOK, LAKE (South part, excluding Sawbill Landing) AND ST. LOUIS (Alborn, Arnold, Bartlett, Birch, Brookstone, Canyon, Clinton, Culver, Duluth, Floodwood, Gowan, Island, Kelsey, Lakewood, Meadowlands, Munger, Palmers, Payne, Prasit, Shaw, Taft) COUNTIES		
CARPENTERS	20.54	9.00

CARP0548G 04/28/2002

	Rates	Fringes
ANOKA, CARVER, DAKOTA, HENNEPIN, RAMSEY, SCOTT, SHERBURNE, AND WASHINGTON COUNTIES		
MILLWRIGHTS	29.44	8.18

CARP0596A 06/01/2002

	Rates	Fringes
ANOKA, CARVER, DAKOTA, HENNEPIN, RAMSEY, SCOTT, SHERBURNE (E. of Hwy #169, inclu. Zimmerman, Big Lake & Elk River) & WASHINGTON COUNTIES:		
SOFT FLOOR LAYERS	25.44	9.73

CARP0606A 05/01/2002

	Rates	Fringes
ITASCA, KOOCHICHING, LAKE (Northern part, including Sawbill Landing) & ST. LOUIS (Excluding Alborn, Arnold, Bartlett, Birch, Brookstone, Canyon, Clinton, Culver, Duluth, Floodwood, Gowan, Island, Kelsey, Lakewood, Meadowlands, Munger, Palmers, Payne, Prasit, Shaw & Taft) COUNTIES:		
CARPENTERS; PILEDRIVERMEN; & SOFT FLOOR LAYERS	19.96	10.10

CARP0606C 05/01/2002

	Rates	Fringes
ITASCA, KOOCHICHING, LAKE (Northern half, excluding Two Harbors, Isabella & Finland), AND ST LOUIS (N.E. 2/3 including Cook, Cusson, Ely; and western strip including Chisholm, Orr and Greaney) COUNTIES		
CARPENTERS & PILEDRIVERMEN (Site Preparation, Excavation, and Incidental Paving)	23.37	10.10

CARP1348A 05/01/2000

	Rates	Fringes
CARLTON, COOK, ITASCA, KOOCHICHING, LAKE & ST. LOUIS COUNTIES:		
MILLWRIGHTS	21.66	10.29

ELEC0110F 03/01/1998

	Rates	Fringes
SOUND, SIGNAL & COMMUNICATIONS WORK:		
Technician (Installation of Controller Only)	19.22	.58+a+b
Installer (Excluding Controller Work)	11.31	.34+a+b

FOOTNOTES:

a. 1 year's service - 5 days' paid vacation; 2 years' service - 10 days' paid vacation; 5 years' service - 12 days' paid vacation; 7 years' service - 14 days' paid vacation; 9 years' service - 16 days' paid vacation; 11 years' service - 18 days' paid vacation; 12 years' service - 20 days' paid vacation

b. 8 Paid Holidays: New Year's Day; Memorial Day; 4th of July; Labor Day; Thanksgiving Day; Day After Thanksgiving; the normal work day preceding Christmas Day; & Christmas Day

---

ELEC0110H 05/01/2002

	Rates	Fringes
ANOKA (Except Anoka & Fridley Townships & the cities of Andover, Anoka, Columbia Heights, Coon Rapids, Fridley, Hilltop, Ramsey & Spring Lake Park), DAKOTA, RAMSEY, SHERBURNE (East of Becker and Santiago Twps), AND WASHINGTON COUNTIES		
ELECTRICIANS	29.45	28.5%+5.77
CABLE SPLICERS	30.45	28.5%+5.77

ELEC0242B 06/01/2002

	Rates	Fringes
CARLTON, COOK, ITASCA (Southerly 12 Twps. including Harris, Feely, Blackberry, Spang, Coodland, Sago & Wawina), LAKE & ST.		

LOUIS (South part bounded on the north by the north line of
Kelsey Township extended east & west) COUNTIES

ELECTRICIANS	26.14	49.5%

ELEC0292K 05/01/2002

	Rates	Fringes

ANOKA (Anoka & Fridley Townships & the cities of Andover, Anoka, Columbia Heights, Coon Rapids, Fridley, Hilltop, Ramsey & Spring Lake Park), CARVER, HENNEPIN, AND SCOTT COUNTIES; AND SHERBURNE COUNTIES (East of Hwy 25 to Hwy 10 and an imaginary line straight West to the Mississiippi River)

ELECTRICIANS:		
Electricians	30.00	14.19
Cable Splicers	31.00	14.66

ELEC0294B 02/01/2003

	Rates	Fringes

ITASCA (Excluding section South of a line extending East & West of the South line of Grand Rapids & Trout Lake Twps), KOOCHICHING & ST. LOUIS (North part bounded on the south by the south line of Ellsburg Township, extended east & west) COUNTIES

JOBS UNDER $3,000,000:		
ELECTRICIANS	21.13	3.91+28.5%
CABLE SPLICERS	28.04	45%

ELEC0294F 06/01/2002

	Rates	Fringes

ITASCA (Excluding section South of a line extending East & West of the South line of Grand Rapids & Trout Lake Twps), KOOCHICHING & ST. LOUIS (North part bounded on the south by the south line of Ellsburg Township, extended east & west) COUNTIES

JOBS OVER $3,000,000:		
ELECTRICIANS	26.09	45%
CABLE SPLICERS	28.04	45%

ELEV0009A 07/03/2002

	Rates	Fringes
ELEVATOR MECHANICS	29.415	7.505+a+b

FOOTNOTES:

a. 7 Paid Holidays: New Year's Day; Memorial Day; Independence Day; Labor Day; Thanksgiving Day; The Day After Thanksgiving & Christmas Day

b. Employer contributes 8% of regular hourly rate to vacation pay credit for employee who has worked in business more than 5 years; 6% for less than 5 years

---

ENGI1049F 05/01/2002

	Rates	Fringes
POWER EQUIPMENT OPERATORS (Site Preparation, Excavation, and Incidental Paving):		
AREA 1:		
GROUP 1	26.27	8.45
GROUP 2	25.72	8.45
GROUP 3	25.54	8.45
GROUP 4	25.42	8.45
GROUP 5	22.38	8.45
GROUP 6	21.17	8.45
AREA 2:		
GROUP 1	24.06	8.45
GROUP 2	23.61	8.45
GROUP 3	23.44	8.45
GROUP 4	23.31	8.45
GROUP 5	20.74	8.45
GROUP 6	19.87	8.45
AREA 3:		
GROUP 1	21.65	8.45
GROUP 2	20.72	8.45
GROUP 3	20.52	8.45
GROUP 4	20.41	8.45
GROUP 5	18.70	8.45
GROUP 6	18.10	8.45

AREA DESCRIPTIONS

AREA 1 (METRO): ANOKA, CARVER, COOK, DAKOTA, HENNEPIN, LAKE, RAMSEY, SCOTT, SHERBURNE (South of the Northern boundary of T. 33-N, and East of the western boundary of R. 27-W), ST. LOUIS, and WASHINGTON COUNTIES

AREA 2 (EASTERN): CARLTON, ITASCA (East of the Western right of way of Hwy #6), KOOCHICHING (East of a North-South line from the Canadian border to Pelland, the Western right of way of Hwy #71 from Pelland to Big Falls and Hwy #6), and SHERBURNE (Remainder) COUNTIES

AREA 3 (WESTERN): ITASCA (Remainder) and KOOCHICHING (Remainder) COUNTIES

POWER EQUIPMENT OPERATOR CLASSIFICATIONS

GROUP 1 - Helicopter Pilot; *Crane with over 135' Boom, excluding Jib; Dragline, Crawler, Hydraulic Backhoe and/or other similar equipment with Shovel-type Controls 3 cu. yds. & over Mfg. rated Cap.; & Pile Driving when 3 Drums are in use

GROUP 2 - Cableway; Concrete Mixer, Stationary Plant over 34E; Derrick (Guy or Stiffleg) (Power) (Skids or Stationary); Diver; Dragline, Crawler, Hydraulic Backhoe and/or similar equipment with Shovel-type Controls, up to 3 cu. yds. Mfg. rated cap.; Dredge or Engineers, Dredge (Power) & Engineer; Front End Loader, 5 cu. yds. & over; Grader or Motor Patrol, Finishing

Earthwork & Bituminous; Locomotive Crane; Master Mechanic; Mixer (Paving) Concrete Paving, Road; Mole, including Power Supply; Mucking Machine, including Mucking Operations, Conway or similar type; Piledriving; Refrigeration Plant Engineer; Tandem Scraper; Tractor - Boom type; Truck Crane - Crawler Crane; & Tugboat 100 HP & over

GROUP 3 - Dual Tractor; Elevating Grader; Pumpcrete; Scraper - Struck Cap. 32 cu. yds. & over; & Self-propelled Traveling Soil Stabilizer

GROUP 4 - Air Track Rock Drill; Articulated Hauler Terex, Caterpillar or similar type; Asphalt Bituminous Stabilizer Plant; Automatic Road Machine (CMI or similar); Backfiller; Bituminous Roller (8 Tons & over); Bituminous Spreader & Finishing (Power); Boom Truck (Power operated Boom); Brokk or R.T.C. 750 Remote Control or Similar types with all

attachments; Cat & Scraper; Cat Tractor with Rock Wagons or similar types; Challenger 75-D or 85-D when pulling Scraper or Bulldozer; Chip Harvester & Tree Cutter over 150 HP; Concrete Batch Plant; Concrete Mixer on jobsite over 14S; Concrete Mobile; Crushing Plant (Gravel & Stone) or Gravel Washing, Crushing & Screening Plant; Curb Machine; Directional Boring Machine; Dope Machine (Pipeline); Drill Rigs, Heavy Rotary or Churn or Cable Drill; Fork Lift or Straddle Carrier; Fork Lift or Lumber Stacker; Front End Loader, over 1 cu. yd.; Hoist Engineer (Power); Hydraulic Tree Planter; Launcherman (Tankerman or Pilot License); Lead Greaser; Locomotive; Mechanic; Milling, Grinding & Planing Machine; Morbark Tub Grinder or Similar Type; Multiple Machines, such as Air Compressors, Welding Machines, Generators, Pumps; Pavement Breaker or Tamping Machine (Power Driven) Mighty Mite or similar type; Pickup Sweeper, 1 cu. yd. & over Hopper Cap.; Pipeline Wrapping, Cleaning or Bending Machine; Power Plant Engineer, 100 K.W.H. & over; Power Actuated Horizontal Boring Machine, over 6"; Pugmill; Rubber- tired Farm Tractor, Backhoe Attach.; Scraper, up to 32 cu. yds.; Skid Steer Loader, over 1 cu. yd. with Backhoe Attachment; Slip Form (Power Driven) (Paving); Tie Tamper & Ballast Machine; Tractor, Bulldozer; Tractor Operator, over 50 HP with Power Take-off; Trenching Machine (Sewer, Water, Gas); Well Point Installation; & Dismantling or Repair Mechanic

GROUP 5 - Air Compressor, 600 CFM or over; Bituminous Roller (Under 8 tons); Bituminous Rubber-tired Roller; Bituminous Spreader & Bituminous Finishing Machine Tender (Power); Concrete Distributor & Spreader Finishing Machine, Longitudinal Float, Joint Machine, & Spray; Concrete Saw (Multiple Blade) (Power Operated); Form Trench Digger (Power); Front End Loader, up to & incl. 1 cu. yd.; Grader (Motor Patrol); Gunite Gunall; Hydraulic Log Splitter; Loader (Barber Greene or similar type); Payhauler or similar type; Post Hole Driving Machine/Post Hole Augar; Power Actuated Auger & Boring Machine; Power Actuated Jack; Pump; Self-propelled Chip Spreader (Flaherty or similar); Sheep Foot Compactor with Blade - 200 HP & over; Shouldering Machine (Power) Apsco or similar type inclu. self-propelled

Sand & Chip Spreader; Stump Chipper & Tree Chipper; Tractor Operator, Bulldozer, 50 HP or less; & Tree Farmer (Machine)

GROUP 6 - Challenger 75-D or 85-D when pulling Disk or Roller; Conveyor; Dredge Deck Hand; Fireman or Tank Car Heater; Gravel Screening Plant (Portable not Crushing or Washing); Greaser (Truck or Tractor); Leverman; Mechanic Tender; Mechanic, Space Heater (Temporary Heat); Oiler (Power Shovel, Crane, Dragline); Power Sweeper; Roller on Gravel Compaction; Self-propelled Vibrating Packer (35 HP & over); Sheep Foot Roller; Tractor, Wheel Type (over 50 HP); & Truck Crane Oiler

*CRANE OVER 135' BOOM, EXCLUDING JIB - $ .25 PREMIUM;
CRANE OVER 200' BOOM, EXCLUDING JIB - $ .50 PREMIUM

UNDERGROUND WORK:
TUNNELS, SHAFTS, ETC. - $ .25 PREMIUM

UNDER AIR PRESSURE - $ .50 PREMIUM

HAZARDOUS WASTE PROJECTS (PPE Required):
LEVEL A - $1.25 PREMIUM
LEVEL B - $ .90 PREMIUM
LEVEL C - $ .60 PREMIUM

ENGI1049K 05/01/2002

	Rates	Fringes
POWER EQUIPMENT OPERATORS (Building Construction):		
GROUP 1	29.94	8.45
GROUP 2	29.60	8.45
GROUP 3	28.19	8.45
GROUP 4	27.85	8.45
GROUP 5	27.68	8.45
GROUP 6	26.17	8.45
GROUP 7	25.05	8.45
GROUP 8	23.04	8.45

POWER EQUIPMENT OPERATOR CLASSIFICATIONS

GROUP 1 - Helicopter Operator; Truck & Crawler Crane with 200' of Boom & Over, including Jib ($.50 premium with 300' of Boom & over, including jib); & Tower Crane 250' & Over

GROUP 2 - Truck & Crawler Crane with 150' of Boom, up to but not including 200' of Boom, including Jib; & Tower Crane 200' & Over, Concrete Pump 164 ft Boom

GROUP 3 - Traveling Tower Crane; Master Mechanic; Pile Driving Operator (when 3 drums are used); Truck & Crawler Crane, up to but not including 150' of Boom, including Jib; Derrick (Guy & Stiffleg); Tower Crane (Stationary) up to 200'; & AllTerrain Vehicle Crane, Boom Truck over 100 ft.

GROUP 4 - Crawler Backhoe; Hoist Engineer (3 drums or more); Locomotive Operator; Overhead Crane Operator (inside building perimeter); & Tractor Operator with Boom

GROUP 5 - Air Compressor Operator 450 CFM or over (2 or more machines); Pump Operator and/or Conveyor Operator (2 or more machines); Mechanic; Pumpcrete or Complaco type Machine Operator; Forklift; Boom Truck up to 100 ft.; Concrete Mixer Operator; Drill Rig - Heavy Rotary or Churn when used for Caisson Drilling for Elevator Cylinder or Building Construction; Front End Loader (Over 1 cu. yd.); Hoist Engineer (1 or 2 drums); Straddle Carrier Operator; Power Plant Engineer (100 KW & over on multiples equal to 100KW & over); Tractor Operator over D2; & Well Point Pump Op.

GROUP 6 - Concrete Batch Plant Operator; Gunite Operator; Tractor Operator D2 or similar size; & Front End Loader Operator, up to 1 cu. yd.

GROUP 7 - Air Compressor Operator 600 CFM or over; Pump

and/or Conveyor Operator; Brakeman; Pick-up Sweeper (1 cu. yd. & over Hopper capacity); Truck Crane Oiler; & Welding Machine Operator, Fireman temporary heat.

GROUP 8 - Mechanical Space Heater (Temporary Heat); Oiler or Greaser; & Elevator Operator

---

IRON0512A 05/01/2003

	Rates	Fringes
ANOKA, BENTON, CARVER, DAKOTA, HENNEPIN, RAMSEY, SCOTT, SHERBURNE, STEARNS, & WASHINGTON COUNTIES		
IRONWORKERS	29.50	11.84

IRON0563B 05/01/2003

	Rates	Fringes
CARLTON, COOK, ITASCA, KOOCHICHING, LAKE & ST. LOUIS COUNTIES		
IRONWORKERS	24.33	13.75

LABO0010D 05/01/2002

	Rates	Fringes
LANDSCAPE LABORERS	13.34	5.05

LABO0132J 05/01/2002

	Rates	Fringes
ANOKA, CARVER, DAKOTA, HENNEPIN, RAMSEY, SCOTT, SHERBURNE & WASHINGTON COUNTIES		
LABORERS:		
GROUP 1	25.73	7.71
GROUP 2	26.23	7.71
GROUP 3	26.73	7.71

LABORERS CLASSIFICATIONS

GROUP 1 - Construction Craft Laborer; Asbestos & Hazardous Waste Tech; Flagperson/Traffic Control; Carpenter Tender; Concrete; Damp Proofer Below Grade; Drill Runner Tender; Dumpman - Dirt, Asphalt, Concrete, Cement; Heater Tender; Hot Tar Caulker - Corker; Joist Handler; Material Handler - Power Buggy; Rebar; Snow Blower Operator; Signal Person; Hydro Blast or Waterblast; Chain Saw Operator; Concrete Saw, Drill Operator; Concrete Vibrator; Demolition & Remodeling, Excluding Demolition of an entire Structural System; Mason Tender; Mortar Mixer - Cement or any other substitute Material or Composition; Pipe Handler; Pneumatic & Electric Tool, Jackhammer, Paving Buster, Chipping Hammer, Tamper Operator, etc.; Swing Stage Line Scaffold (Not including "Patent" Scaffolding); Torchman - Gas, Electric, Thermal or similar device; & Remote Control Tamper

GROUP 2 - Caisson Work; Mounted Wall Saw Operator; Nozzle Operator - Gunite, Cement, Sandblasting; Pipelayer; Pipe Rehab Technical, including Cleaning, Cutting, Cameraing, etc; Refractory Worker; Sheeting Setter & Driver, Heavy Building Excavation; Underground Work - Open Ditch or Excavation 8' Below Grade; & Underpinning

GROUP 3 - Driller for Blasting purposes; Dynamite Blaster or substitute products Tovex TR, Water, Gas, Gel, Bristar, Silent Dynamite, etc.

LABO0132N 02/01/2002

	Rates	Fringes
ANOKA, CARVER, DAKOTA, HENNEPIN, RAMSEY, SCOTT, SHERBURNE & WASHINGTON COUNTIES:		
PLASTERER TENDERS	27.63	6.70

LABO0132S 01/01/2000

	Rates	Fringes
ANOKA, BENTON, CARVER, DAKOTA, HENNEPIN, RAMSEY, SCOTT, SHERBURNE, STEARNS & WASHINGTON COUNTIES:		
LABORERS, Asbestos Abatement	19.16	6.62

LABO0563G 05/01/2002

	Rates	Fringes
LABORERS (Site Preparation, Excavation & Incidental Paving):		
AREA 1:		
GROUP 1	22.89	6.21
GROUP 2	23.09	6.21
GROUP 3	23.24	6.21
GROUP 4	23.34	6.21
GROUP 5	23.59	6.21
GROUP 6	24.89	6.21
AREA 2:		
GROUP 1	22.17	5.96
GROUP 2	22.37	5.96

GROUP 3	22.52	5.96
GROUP 4	22.62	5.96
GROUP 5	22.87	5.96
GROUP 6	24.17	5.96
AREA 3:		
GROUP 1	21.62	6.51
GROUP 2	21.82	6.51
GROUP 3	21.97	6.51
GROUP 4	22.07	6.51
GROUP 5	22.32	6.51
GROUP 6	23.62	6.51
AREA 4:		
GROUP 1	15.74	5.21
GROUP 2	15.94	5.21
GROUP 3	16.09	5.61
GROUP 4	16.19	5.21
GROUP 5	16.44	5.21
GROUP 6	17.74	5.21

AREA DESCRIPTIONS

AREA 1 (District 1): ANOKA, CARVER, DAKOTA, HENNEPIN, RAMSEY, SCOTT, SHERBURNE, and WASHINGTON COUNTIES

AREA 2 (District 2A): CARLTON, COOK, LAKE and ST. LOUIS (South of T. 55 N) COUNTIES

AREA 3 (District 2B): ITASCA and ST. LOUIS (North of T. 55 N)

AREA 4 (District 4): KOOCHICHING COUNTY

LABORERS CLASSIFICATIONS

GROUP 1: Construction; Bituminous Batcherperson (Stationary Plant); Bituminous Worker - Shoveler, Raker, Floater, Squeegee, Utility; Blaster Tender; Brick Tender; Carpenter Tender; Cement Coverperson Batch Truck; Cement Handler - Bulk, Bag; Concrete Batcherperson; Concrete Handler, Caisson, Footings, Columns, Piling, Slabs, etc.; Concrete Longitudinal Float Operator (Manual Bullfloat on Paving); Concrete Shoveler, Tamper & Puddler (Paving); Conduit Layer; Curb Setter; Damp Proofer Below Grade; Demolition of an entire Structural System, Excluding Remodeling; Drill Runner Tender; Dump Operator (Dirt, Paver, Dumping Batch Truck, etc.); Fabric Installer; Grade Checker; Hydrant & Valve Setter; Hydro Blast or Waterblaster; Joint Filler (Concrete Pavement); Kettleperson (Bituminous or Lead); Labor Wrecking Demolition; Mortar Mixer; Pipe Handler; Power Buggy Operator; Pump Operator(Less than 6"); Retaining Wall Installation; Sand Cushion Bedmaker; Slip Lining of Utility Lines; Soil Stabilizer; Sound Barrier & Guard Rail Installation; Squeegeeperson; Stabilizing Batcherperson (Stationary Plant); Temporary Heaters & Blower Tender; Top Person (Sewer, Water or Gas Trench); Flagperson;Traffic Controller (Traffic Barriers) & Transit/Level. Pipelayer, Laser Beam (sewer, water, gas) $1.50 above Group 1 rate. Blasting Person (Dynamite or substitute product) $3.00 above Group 1 rate.

GROUP 2: Chain Saw; Compaction Equipment (Hand Operated or Remote Control); Concrete Drilling; Concrete Mixer Operator; Concrete Sawer; Concrete Vibrator; Ditch & Other Work more than 8' Below starting level of manual work; Formsetter; Joint Sawer, Mortar; Pipe Fuser/Technician; Pneumatic Tools, Jackhammer, Paving Buster, Chipping Hammer, etc.; Remote Control Demo Machine & Related Accessories (Electric/Hydraulic); Stone Tender/Mason Tender; & Torchperson - Gas, Electric, Thermal or Similar Device

GROUP 3: Brick or Block Paving Setter; Caisson Work; Cofferdam Work

GROUP 4: Cement Gun Operator (1 1/2" or Over); Driller - Air

Track or Similar; & Nozzle Operator (Gunite, Sandblasting, Cement); Pipe Rehab (Including Cleaning, Relining, Camera).

GROUP 5: Asbestos & Hazardous Waste Technician;Bottom person (Sewer, Water, or Gas Trench more than 8 ft below starting level of manual work); Tunnel Laborer; Tunnel Miner; Tunnel Miner Tender; Underground Laborer; & Underpinning

GROUP 6: Tunnel Miner Under Pressure

LABO1091A 05/01/2002

	Rates	Fringes
CARLTON, COOK, LAKE & ST. LOUIS (South of T 55 N) COUNTIES:		
LABORERS:		
GROUP 1	21.13	6.06
GROUP 2	21.28	6.06
GROUP 3	21.58	6.06
GROUP 4	21.83	6.06
GROUP 5	19.23	6.06

LABORER CLASSIFICATIONS

GROUP 1: General; Carpenter Tender; Concrete Laborer; Damp Proofer Below Grade; Drill Runner Tender; Dumpman - Dirt, Asphalt, Concrete, Cement; Heater Tender; Hot Tar Caulker - Corker; Joist Handler; Rebar; Snow Blower Operator; Signalperson; Material Handler (All types Power Buggy); Fire Control; Asbestos Removal; & Hazardous Waste

GROUP 2: Chain Saw Operator; Concrete Saw, Drill Operator; Concrete Vibrator; Demolition & Wrecking, Excluding Remodeling; Gunite, Sandblasting Machine Operator; Mason Tender; Mortar Mixer - Cement or any other substitute material or composition; Pipe Handler; Pneumatic & Electric Tools,Jackhammer, Paving Buster, Chipping Hammer, Tamper Operator, etc.; Swing Stage Line Scaffold (not including "patent" scaffolding); Torchman - Gas, Electric, Thermal or similar device; & Hydroblast

GROUP 3: Caisson Work; Nozzle Operator - Gunite, Cement, Sandblasting; Pipelayer; Refractory Worker; Sheeting Setter &

Driver, Heavy Building Excavation; Underground Work - Open Ditch or Excavation 8' Below Grade; Underpinning; & Hod Carrier

GROUP 4: Driller for Blasting Purposes; Dynamite Blasters or substitute products Tovex TR, Water, Gas, Gel, Bristar, Silent Dynamite, etc.; Asbestos Abatement Worker; & Hazardous Waste Worker

GROUP 5: FLAGPERSON

LABO1091C 05/01/2002

	Rates	Fringes
CARLTON, COOK, LAKE & ST. LOUIS (South of TR 55) COUNTIES:		
LABORERS:		
Asbestos Abatement	20.80	7.41

LABO1097A 05/01/2002

	Rates	Fringes
ITASCA, KOOCHICHING & ST. LOUIS (North of T 55N) COUNTIES:		
LABORERS:		
GROUP 1	20.47	5.81
GROUP 2	20.87	5.81
GROUP 3	21.17	5.81
GROUP 4	22.47	5.81

LABORERS CLASSIFICATIONS

GROUP 1: Construction; Carpenter Tender; Concrete; Damp Proofer Below Grade; Dump Person - Dirt, Asphalt, Concrete & Cement; Heater Tender; Hot Tar Caulker - Corker; Joist Handler; Material Handler - Power Buggy; Rebar; Signal Person; & Snow Blower Operator; Chain Saw Operator; Concrete Vibrator; Demolition & Wrecking, Excluding Remodeling; Mason Tender; Mortar Mixer - Cement or Any Other Substitute Material or Composition; Pipe Handler; Pneumatic & Electric Tool, Jackhammer, Paving Buster, Chipping Hammer, Tamper Operator, Etc.; Swing Stage Line Scaffold (Not including "Patent" Scaffolding); & Torch Person - Gas, Electric, Thermal or similar device; Scrapping, Sweeping & Clean-up; Skid Steer, Forklift (Incidental Use); Flagperson.

GROUP 2: Creosote Handler; Caisson Work; Concrete Saw Drill Operator; Nozzle Operator - Gunite, Cement, Sandblasting; Pipelayer; Sheeting Setter & Driver, Heavy Building Excavation; Underground Work - Open Ditch or Excavation 8' Below Grade; Underpinning; & High Pay/Low Pay - 40 ft. Over or Under Ground Floor without Conventional Floor Areas; Pipe- Rehab Technician, including Cleaning, Cutting, Camering, etc.; and Wall Mounted Saw Operator

GROUP 3: Driller for Blasting Purposes; Dynamite Blaster or substitute products; & Tovex TR, Water, Gas, Gel, Bristar, Silent Dynamite, etc.

GROUP 4: Refractory work

LABO1097F 01/01/2002

	Rates	Fringes
ITASCA, KOOCHICHING & ST. LOUIS (North of T 55 N) COUNTIES:		
LABORERS:		
Asbestos Abatement	20.80	7.41

PAIN0061A 05/01/2002

	Rates	Fringes
DAKOTA, RAMSEY AND WASHINGTON COUNTIES		
PAINTERS:		
GROUP 1	26.25	9.38
GROUP 2	26.25	9.28
GROUP 3	19.69	9.28
GROUP 4	27.00	9.38

PAINTER CLASSIFICATIONS

GROUP 1: Brush; Paperhanger
GROUP 2: Drywall Finisher
GROUP 3: Drywall Sander
GROUP 4: Sandblaster; Spray; Swing Stage; Boatswain Chair; Window Jack; Safety Belt; Erected Structural Steel; Application of Epoxy Materials & Materials containing over 50% Creosote

---

PAIN0106A 05/01/2001

	Rates	Fringes
CARLTON, COOK, ITASCA, KOOCHICHING, LAKE & ST. LOUIS COUNTIES:		
GLAZIERS	20.11	7.24+a

FOOTNOTE:
a. 1 to 4 years' service - 1 week's paid vacation; 5 to 11 years' service - 2 weeks' paid vacation; 11 years' service or more - 3 weeks' paid vacation

---

PAIN0106K 05/01/2001

	Rates	Fringes
CARLTON, COOK, ITASCA, KOOCHICHING, LAKE & ST. LOUIS COUNTIES:		
PAINTERS:		
REPAINT:		
Brush; Roller; & Lead Base Paint Removal & Abatement with Basic Hand Tools such as Scrapers	21.23	7.73
Paperhanging; Spray; Steel; Taping; & Lead Base Paint Removal & Abatement with Other Than Basic Hand Tools	21.83	7.73

New:
Brush; Roller 22.73 7.73
Paperhanging; Spray; Steel
and Taping 23.33 7.73

PAIN0386A 05/01/2002

	Rates	Fringes
ANOKA, CARVER, HENNEPIN, SCOTT & SHERBURNE (South and East of a line drawn between the town of Santiago in Sherburne County and the town of Clearwater in Wright County) COUNTIES		
PAINTERS:		
Brush; Roller & Paperhanger	25.50	10.13
Spray; Steel; Sandblaster; Swing Stage & Epoxy	26.25	10.13

PAIN0386K 05/01/2002

	Rates	Fringes
ANOKA, CARVER, HENNEPIN, SCOTT & SHERBURNE (South & east of a line drawn between the town of Santiago, Sherburne County and the town of Clearwater, Wright County) COUNTIES		
DRYWALL:		
Finisher	24.93	10.13
Sander	18.70	10.13

PAIN0880A 05/01/2002

	Rates	Fringes
SIGN PAINTERS	21.12	2.07+a+b

FOOTNOTES:
a. 8 Paid Holidays: New Year's Day; Memorial Day; Independence Day; Labor Day; Thanksgiving Day; the Day After Thanksgiving; the last working Day Before Christmas; & Christmas Day

b. Vacation Pay: 3 yrs' service - 2 wks' paid vacation; 6 yrs' service - 3 wks' paid vacation; 15 yrs' service - 4 wks' paid vacation

---

PAIN0884J 06/01/2002

	Rates	Fringes
BENTON, SHERBURNE (Western one-half, North & West of a line drawn between the city of Santiago in Sherburne County & the city of Clearwater in Wright County) & STEARNS COUNTIES:		
PAINTERS:		
Brush & Roller	19.31	7.71:
Taper & Finisher	19.31	7.71
Spray; Two Component Paints; Epoxies; Sandblasting & Rigging;		

Work done on Swing Scaffold, Safety Harness, Window Jacks, Boatswain's Chair, Coverings & Erection of Scaffolding for same; Work on Erected Structural Steel & Abrasive Blasting	20.76	7.06

PAIN1324F 06/01/2002

	Rates	Fringes
ANOKA, CARLTON, CARVER, DAKOTA, HENNEPIN, ITASCA, KOOCHICHING, RAMSEY, SCOTT, SHERBURNE, & WASHINGTON COUNTIES		
GLAZIERS	27.36	10.14

PLAS0265A 06/01/2000

	Rates	Fringes
ANOKA, CARVER, DAKOTA, HENNEPIN, RAMSEY, SCOTT, SHERBURNE & WASHINGTON COUNTIES:		
PLASTERERS	24.88	8.35

PLAS0633A 05/01/2002

	Rates	Fringes
ANOKA, CARVER, DAKOTA, HENNEPIN, RAMSEY, SCOTT, SHERBURNE & WASHINGTON COUNTIES		
CEMENT MASONS	27.34	9.31

PLAS0633D 05/01/2002

	Rates	Fringes
ANOKA, CARVER, DAKOTA, HENNEPIN, RAMSEY, SCOTT, SHERBURNE & WASHINGTON COUNTIES:		
CEMENT MASONS (Site Preparation, Excavation, & Incidental Paving)	26.14	9.31

PLAS0633K 05/01/2002

	Rates	Fringes
CARLTON, COOK, LAKE & ST. LOUIS (South of T 55N) COUNTIES		
CEMENT MASONS	22.79	9.30

PLAS0633T 05/01/2002

	Rates	Fringes
CARLTON, COOK, LAKE & ST. LOUIS (South of T. #55 north) COUNTIES		
CEMENT MASONS (Site Preparation, Excavation & Incidental Paving)	24.93	9.30

PLAS0633X 05/01/2002

	Rates	Fringes
ITASCA & ST. LOUIS (North of White Face River) COUNTIES		
CEMENT MASONS	21.59	8.21

PLAS1633D 05/01/2002

	Rates	Fringes
KOOCHICHING COUNTY		
PLASTERERS	19.59	5.91

PLAS6330C 05/01/2002

	Rates	Fringes
CARLTON, COOK, ITASCA, LAKE AND ST. LOUIS COUNTIES		
PLASTERERS	23.27	9.30

PLUM0011A 05/01/2001

	Rates	Fringes
CARLTON, COOK (A strip 20 miles inland along the shores of Lake Superior), LAKE (A strip 20 miles inland along the shores of Lake Superior) & ST. LOUIS (South of an east-west line drawn through Cotton) COUNTIES		
PLUMBERS, PIPEFITTERS and STEAMFITTERS	26.35	9.15

PLUM0015A 05/01/2001

	Rates	Fringes
ANOKA, CARVER, HENNEPIN, SCOTT & SHERBURNE (East of a line running northeasterly from the point of Wright County that lies furthest north to that point of Mille Lacs County that is south by west) COUNTIES		
PLUMBERS	28.80	9.71+a

FOOTNOTE:
a. Paid Holiday: Labor Day

PLUM0034B 05/01/2002

	Rates	Fringes
DAKOTA, RAMSEY & WASHINGTON COUNTIES		
PLUMBERS	30.55	10.29+a

FOOTNOTE:
a. 1 Paid Holiday: Labor Day

PLUM0417A 01/01/2003

	Rates	Fringes
ANOKA, DAKOTA, HENNEPIN, RAMSEY, SCOTT & WASHINGTON COUNTIES:		
SPRINKLER FITTERS	30.97	11.81+A

FOOTNOTE:
A. 6 Paid Holidays: Memorial Day; July 4th; Friday before Labor Day; Labor Day; Columbus Day; & Thanksgiving Day

---

PLUM0455B 05/01/2002

	Rates	Fringes
DAKOTA, RAMSEY & WASHINGTON COUNTIES		
PIPEFITTERS & STEAMFITTERS	31.22	10.64

PLUM0539A 05/01/2002

	Rates	Fringes
ANOKA, CARVER, HENNEPIN, SCOTT & SHERBURNE (East of a line running North-Easterly from point of Wright Co. lies furthest North to that point of Mille Lacs that is South by West) COUNTIES		
PIPEFITTERS	31.30	10.70

PLUM0539H 05/01/2002

	Rates	Fringes
SHERBURNE (West of a line running North-Easterly from point of Wright Co. lies furthest North to point of Mille Lacs that is South by West) COUNTY		
PIPEFITTERS	24.71	13.03

PLUM0589A 06/01/2002

	Rates	Fringes
COOK (Except a strip 20 miles inland along the shores of Lake Superior), ITASCA, KOOCHICHING, LAKE (Except a strip 20 miles inland along the shores of Lake Superior) & ST. LOUIS (North of an East-West line drawn through Cotton) COUNTIES		
PIPEFITTERS; PLUMBERS; & STEAMFITTERS	24.56	12.13

ROOF0096C 09/30/2002

	Rates	Fringes
CARLTON, COOK, LAKE & ST. LOUIS (South of Hwy 16, excluding city of Forbes) COUNTIES		
ROOFERS	24.20	8.15

ROOF0096E 05/01/2002

	Rates	Fringes

ANOKA, CARVER, DAKOTA, HENNEPIN, RAMSEY, SCOTT & WASHINGTON
COUNTIES

ROOFERS	27.19	8.95+a

FOOTNOTE:
a. 1 Paid Holiday: Labor Day

ROOF0096N 09/30/2002

	Rates	Fringes
ITASCA, KOOCHICHING & ST. LOUIS (Northern two-thirds) COUNTIES		
ROOFERS	20.40	5.70

SFMN0669E 04/01/2003

	Rates	Fringes
CARLTON, CARVER, COOK, ITASCA, KOOCHICHING, LAKE, SHERBURNE, AND ST. LOUIS COUNTIES		
SPRINKLER FITTERS	29.06	8.10

SHEE1010E 05/01/2002

	Rates	Fringes
CARLTON, COOK, LAKE & ST. LOUIS (Southern one-third) COUNTIES		
SHEET METAL WORKERS	26.21	11.15

SHEE1010F 05/01/2002

	Rates	Fringes
ITASCA, KOOCHICHING & ST. LOUIS (Northern two-thirds) COUNTIES		
SHEET METAL WORKERS	25.43	11.25

SHEE1010G 07/01/2002

	Rates	Fringes
ANOKA, CARVER, DAKOTA, HENNEPIN, RAMSEY, SCOTT & WASHINGTON COUNTIES		
SHEET METAL WORKERS	29.60	11.57+a

FOOTNOTE:
a. 1 Paid Holiday: Labor Day

SHEE1010H 05/01/2002

	Rates	Fringes
SHERBURNE COUNTY		
SHEET METAL WORKERS	26.07	10.53

TEAM0160Q 05/01/2002

	Rates	Fringes
TRUCK DRIVERS (Site Preparation, Excavation & Incidental Paving):		
AREA 1:		
GROUP 1	21.60	6.50
GROUP 2	21.05	6.50
GROUP 3	20.95	6.50
GROUP 4	20.70	6.50
AREA 2:		
GROUP 1	21.40	6.50
GROUP 2	20.85	6.50
GROUP 3	20.75	6.50
GROUP 4	20.50	6.50
AREA 3:		
GROUP 1	20.45	6.50
GROUP 2	19.90	6.50
GROUP 3	19.80	6.50
GROUP 4	19.55	6.50
AREA 4:		
GROUP 1	17.52	6.50
GROUP 2	17.01	6.50
GROUP 3	16.86	6.50
GROUP 4	16.86	6.50

AREA DESCRIPTIONS

AREA 1 (District 1): ANOKA, CARVER, DAKOTA, HENNEPIN, RAMSEY, SCOTT, SHERBURNE & WASHINGTON COUNTIES

AREA 2 (District 2): COOK, LAKE & ST. LOUIS COUNTIES

AREA 3 (District 2A): CARLTON AND ITASCA (East of T.H. #6) COUNTIES

AREA 4 (District 4): ITASCA (West of T.H. #6), AND KOOCHICHING COUNTIES

TRUCK DRIVER CLASSIFICATIONS

GROUP 1 - Boom; Mechanic; Off-Road, including Articulated Dump Truck; Tractor Trailer; Winch Truck

GROUP 2 - Tri Axles (Including Four Axles)

GROUP 3 - Bituminous Distributor; Bituminous Distributor (One man operation); Tandem Axles & Single Axles

GROUP 4 - Bituminous Distributor Spray Operator (Rear and Oiler); Dumpman; Pilot Car; Self-propelled Packer; Slurry Operator; Tank Truck Tender (Gas, Oil, Road Oil & Water); Tractor Operator (Wheel type used for any purpose)

THE FOLLOWING CLASSIFICATIONS SHALL COME UNDER THE APPROPRIATE AXLE RATE WAGE GROUP:
"A" Frame; Dry Batch Hauler; Ready-Mix Concrete; Slurry; Tank (Gas, Oil, Road Oil & Water)

TEAM0221A 06/01/2002

	Rates	Fringes
TRUCK DRIVERS (LANDSCAPE):		
Single Axle & Farm Tractor	14.20	6.20
Tandem Axle	14.35	6.20
Truck-Train Combination	14.50	6.20

TEAM0346A 05/01/2003

	Rates	Fringes
ANOKA, CARLTON, CARVER, COOK, DAKOTA, HENNEPIN, ITASCA (East of T.H. #6), LAKE, RAMSEY, ST. LOUIS, SCOTT, SHERBURNE & WASHINGTON COUNTIES		
TRUCK DRIVERS:		
GROUP 1	22.65	6.75
GROUP 2	22.10	6.75
GROUP 3	22.00	6.75
GROUP 4	21.75	6.75

TRUCK DRIVER CLASSIFICATIONS

GROUP 1: Boom Truck
GROUP 2: Ready Mix, Tractor Trailor
GROUP 3: Fork Lift, Mechanic, Tandem or 3 axle truck
GROUP 4: Dumpman, Farm Tractor, Single or 2 axle Truck

TEAM1097D 05/01/2002

	Rates	Fringes
ITASCA (West of T.H. 36), AND KOOCHICHING COUNTIES		
TRUCK DRIVERS	20.47	

WELDERS - Receive rate prescribed for craft performing operation to which welding is incidental.

Unlisted classifications needed for work not included within the scope of the classifications listed may be added after award only as provided in the labor standards contract clauses (29 CFR 5.5(a)(1)(ii)).

In the listing above, the "SU" designation means that rates listed under that identifier do not reflect collectively bargained wage and fringe benefit rates. Other designations indicate unions whose rates have been determined to be prevailing.

WAGE DETERMINATION APPEALS PROCESS

1.) Has there been an initial decision in the matter? This can be:

* an existing published wage determination
* a survey underlying a wage determination
* a Wage and Hour Division letter setting forth a position on a wage determination matter
* a conformance (additional classification and rate) ruling

On survey related matters, initial contact, including requests for summaries of surveys, should be with the Wage and Hour Regional Office for the area in which the survey was conducted because those Regional Offices have responsibility for the Davis-Bacon survey program. If the response from this initial contact is not satisfactory, then the process described in 2.) and 3.) should be followed.

With regard to any other matter not yet ripe for the formal process described here, initial contact should be with the Branch of Construction Wage Determinations. Write to:

Branch of Construction Wage Determinations
Wage and Hour Division
U. S. Department of Labor
200 Constitution Avenue, N. W.
Washington, D. C. 20210

2.) If the answer to the question in 1.) is yes, then an interested party (those affected by the action) can request review and reconsideration from the Wage and Hour Administrator (See 29 CFR Part 1.8 and 29 CFR Part 7). Write to:

Wage and Hour Administrator
U.S. Department of Labor
200 Constitution Avenue, N. W.
Washington, D. C. 20210

The request should be accompanied by a full statement of the interested party's position and by any information (wage payment data, project description, area practice material, etc.) that the requestor considers relevant to the issue.

3.) If the decision of the Administrator is not favorable, an interested party may appeal directly to the Administrative Review Board (formerly the Wage Appeals Board). Write to:

Administrative Review Board
U. S. Department of Labor
200 Constitution Avenue, N. W.
Washington, D. C. 20210

4.) All decisions by the Administrative Review Board are final.

END OF GENERAL DECISION

MN020007-24

General Decision Number MN030061

Superseded General Decision No. MN020061

State: Minnesota

Construction Type:
HEAVY
SEWER AND WATER LINE
TREATMENT PLANT

County(ies):

ANOKA	HENNEPIN	SCOTT
BENTON	HOUSTON	SHERBURNE
CARVER	ISANTI	ST LOUIS
CHISAGO	OLMSTED	STEARNS
CLAY	POLK	WASHINGTON
DAKOTA	RAMSEY	WRIGHT

TREATMENT PLANTS, HEAVY, SEWER & WATER LINES

Modification Number	Publication Date
0	06/13/2003

COUNTY(ies):

ANOKA	HENNEPIN	SCOTT
BENTON	HOUSTON	SHERBURNE
CARVER	ISANTI	ST LOUIS
CHISAGO	OLMSTED	STEARNS
CLAY	POLK	WASHINGTON
DAKOTA	RAMSEY	WRIGHT

ASBE0034G 06/01/2002

	Rates	Fringes
ANOKA, BENTON, CARVER, CHISAGO, DAKOTA, HENNEPIN, HOUSTON, ISANTI, OLMSTED, RAMSEY, SCOTT, SHERBURNE, STEARNS, WASHINGTON & WRIGHT COUNTIES		
INSULATOR/ASBESTOS WORKERS (Includes application of all insulating materials, protective coverings, coatings & finishings to all types of mechanical systems)	29.59	12.34

ASBE0049G 06/01/2002

	Rates	Fringes
ST. LOUIS COUNTY:		
ASBESTOS WORKERS/INSULATORS (Includes application of all insulating materials, protective coverings, coatings & finishings to all types of mechanical systems)	28.33	8.93

ASBE0133C 07/01/2002

	Rates	Fringes
CLAY & POLK COUNTIES		
ASBESTOS WORKERS/INSULATORS (Includes application of all insulating materials, protective coverings, coatings & finishings to all types of mechanical systems)	22.43	7.60

ASBE0205K 05/01/2998

	Rates	Fringes
ANOKA, BENTON, CARVER, CHISAGO, DAKOTA, HENNEPIN, HOUSTON, ISANTI, OLMSTED, RAMSEY, SCOTT, SHERBURNE, ST. LOUIS, STEARNS, WASHINGTON & WRIGHT COUNTIES:		
HAZARDOUS MATERIAL HANDLERS (Includes preparation, wetting, stripping, removal, scrapping, vacuuming, bagging & disposing of all insulation materials, whether they contain asbestos or not, from mechanical systems)	18.21	3.30

BOIL0647E 10/01/1999

	Rates	Fringes
BOILERMAKERS	23.35	9.71

BRMN0001Z 05/01/2002

	Rates	Fringes
ANOKA, CARVER, CHISAGO, DAKOTA, HENNEPIN, ISANTI, RAMSEY, SCOTT, SHERBURNE (City of Elk River), WASHINGTON & WRIGHT COUNTIES:		
BRICKLAYERS & STONEMASONS	28.64	8.80

BRMN0003E 05/01/2003

	Rates	Fringes
ST. LOUIS (South of a line between Townships #54 & #55, 2 miles north of Cotton) COUNTY:		
BRICKLAYERS	28.83	9.51

BRMN0003F 05/01/2002

	Rates	Fringes
ST. LOUIS COUNTY (S. of a line between Townships 54 & 55 (2 miles north of Cotton)		
TILE LAYERS	21.96	9.00

BRMN0007C 05/01/2002

	Rates	Fringes
HOUSTON COUNTY		
BRICKLAYERS; BLOCKLAYERS; CAULKERS; CLEANERS; POINTERS; & STONEMASONS	27.27	9.13

BRMN0008I 05/01/2002

	Rates	Fringes
OLMSTED COUNTY		
BRICKLAYERS; CAULKERS; CLEANERS; POINTERS; & STONEMASONS	27.78	9.13

BRMN0008J 05/01/2002

	Rates	Fringes
OLMSTED COUNTY		
TILE LAYERS	25.14	

BRMN0015H 05/01/2002

	Rates	Fringes
CLAY AND POLK COUINTIES		
BRICKLAYERS	25.82	9.05

BRMN0015I 05/01/2002

	Rates	Fringes
CLAY COUNTY		
CEMENT MASONS	25.42	9.05

BRMN0016C 05/01/2002

	Rates	Fringes
ST. LOUIS (North of a line between Townships #54 & #55, 2 miles north of Cotton) COUNTY:		
BRICKLAYERS	25.11	11.20

BRMN1000A 05/01/2002

	Rates	Fringes
BENTON, SHERBURNE (Excluding city of Elk River) & STEARNS COUNTIES:		
BRICKLAYERS; BLOCKLAYERS & STONEMASONS	26.65	8.80

BRMN1000B 05/01/2002

	Rates	Fringes

BENTON COUNTY

CEMENT MASONS (Treatment Plants)	26.20	8.70

STEARNS COUNTY

CEMENT MASONS & PLASTERERS (Treatment Plants)	26.20	8.70

BRMN1000C 05/01/2002

ANOKA, BENTON, CARVER, CHISAGO, CLAY, DAKOTA, HENNEPIN, HOUSTON, ISANTI, POLK, RAMSEY, SCOTT, SHERBURNE, ST. LOUIS (Excluding Duluth and south of Township Line 55), STEARNS, WASHINGTON & WRIGHT COUNTIES:

	Rates	Fringes
TILE SETTERS	27.29	9.65

BRMN1000D 05/01/2002

	Rates	Fringes
TILE FINISHERS	23.90	7.55

BRMN1000E 05/01/2002

	Rates	Fringes
MARBLE SETTERS	28.64	8.80

BRMN1000J 05/01/2002

	Rates	Fringes
TERRAZZO MECHANICS	26.91	10.10
TERRAZZO BASE MACHINES	27.79	8.70
TERRAZZO FINISHERS	27.46	8.70

CARP0087F 05/01/2002

ANOKA, CARVER, CHISAGO, DAKOTA, HENNEPIN, ISANTI, RAMSEY, SCOTT, SHERBURNE (Excluding St. Cloud & extending 5 miles beyond the city limits of St. Cloud), WASHINGTON & WRIGHT COUNTIES:

	Rates	Fringes
CARPENTERS; INSULATORS; & PILEDRIVERMEN (Treatment Plants)	28.66	7.88

CARP0087L 05/01/2002

ANOKA, CARVER, CHISAGO, DAKOTA, HENNEPIN, ISANTI, RAMSEY, SCOTT, SHERBURNE, WASHINGTON, AND WRIGHT COUNTIES

	Rates	Fringes
CARPENTERS & PILEDRIVERMEN (Heavy, Sewer & Water Lines)	26.17	9.80

CARP0190I 05/01/1997

	Rates	Fringes
ANOKA, BENTON, CARVER, CHISAGO, CLAY, DAKOTA, HENNEPIN, ISANTI, RAMSEY, SCOTT, SHERBURNE, STEARNS, WASHINGTON & WRIGHT COUNTIES:		
LATHERS	22.45	7.04

CARP0190L 06/01/2001

	Rates	Fringes
HOUSTON AND OLMSTED COUNTIES		
LATHERS	24.34	5.04

CARP0361G 05/01/2001

	Rates	Fringes
ST. LOUIS (Alborn, Arnold, Bartlett, Birch, Brookstone, Canyon, Clinton, Culver, Duluth, Floodwood, Gowan, Island, Kelsey, Lakewood, Meadowlands, Munger, Palmers, Payne, Prasit, Shaw & Taft) COUNTY:		
CARPENTERS (Treatment Plants)	20.54	9.00

CARP0361J 05/01/2001

	Rates	Fringes
POLK & ST. LOUIS COUNTIES		
LATHERS	20.82	9.00

CARP0361M 05/01/2001

	Rates	Fringes
ST. LOUIS (Alborn, Arnold, Bartlett, Birch, Brookstone, Canyon, Clinton, Culver, Duluth, Floodwood, Gowan, Island, Kelsey, Lakewood, Meadowlands, Munger, Palmers, Payne, Prasit, Shaw & Taft) COUNTY:		
SOFT FLOOR LAYERS	19.73	9.91

CARP0361T 05/01/2002

	Rates	Fringes
ST LOUIS COUNTY (Southern 1/3 including Cotton, Floodwood, Fond Du Lac, and Proctor)		
CARPENTERS & PILEDRIVERMEN (Heavy, Sewer, and Water Lines)	22.51	10.96

CARP0361U 05/01/2002

	Rates	Fringes
ST LOUIS COUNTY (Duluth)		
CARPENTERS & PILEDRIVERMEN (Heavy, Sewer, and Water Lines)	22.91	10.96

CARP0548F 04/28/2002

	Rates	Fringes
ANOKA, BENTON, CARVER, CHISAGO, CLAY (Moorhead & up to 5 miles radius), DAKOTA, HENNEPIN, HOUSTON, ISANTI, OLMSTED, POLK (East Grand Forks & up to 5 miles radius), RAMSEY, SCOTT, SHERBURNE, STEARNS, WASHINGTON & WRIGHT COUNTIES:		
MILLWRIGHTS	29.44	8.18

CARP0596D 06/01/2002

	Rates	Fringes
ANOKA, CARVER, CHISAGO, DAKOTA, HENNEPIN, ISANTI, RAMSEY, SCOTT, SHERBURNE (E. of Hwy #169, inclu. Zimmerman, Big Lake & Elk River), WASHINGTON & WRIGHT (S. of Hwy #12, inclu. Cokato, Buffalo & Monticello) COUNTIES:		
SOFT FLOOR LAYERS	25.44	9.73

CARP0606F 05/01/2002

	Rates	Fringes
CLAY AND POLK COUNTIES		
CARPENTERS & PILEDRIVERMEN (Heavy, Sewer, and Water Lines)	18.34	10.10

CARP0606G 05/01/2002

	Rates	Fringes
ST. LOUIS COUNTY (Excluding Alborn, Arnold, Bartlett, Birch, Brookstone, Canyon, Clinton, Culver, Duluth, Floodwood, Gowan, Island, Kelsey, Lakewood, Meadowlands, Munger, Palmers, Payne, Prasit, Shaw & Taft)		
CARPENTERS; PILEDRIVERMEN & SOFT FLOOR LAYERS (Treatment Plants)	19.96	10.10

CARP0606I 05/01/2002

	Rates	Fringes
POLK COUNTY (Excluding East Grand Forks and an area 5 miles outside city limits)		
CARPENTERS & PILEDRIVERMEN (Treatment Plants)	16.49	8.96

CARP0606J 05/01/2002

	Rates	Fringes
ST LOUIS COUNTY (Northeast 2/3 including Cook, Cusson, Ely; and Western part including Chisholm, Greaney, and Orr)		
CARPENTERS & PILEDRIVERMEN (Heavy, Sewer, and Water Lines)	23.37	10.10

CARP0930C 05/01/2002

	Rates	Fringes
BENTON, SHERBURNE (Extreme NW portion, Including St. Cloud & extending 5 miles beyond the city limits of St. Cloud) & STEARNS COUNTIES		
CARPENTERS & PILEDRIVERMEN (Treatment Plants)	20.66	7.23

CARP0930F 05/01/2002

	Rates	Fringes
BENTON AND STEARNS COUNTIES		
CARPENTERS & PILEDRIVERMEN		
(Heavy, Sewer & Water Lines)	21.79	9.58

CARP1176B 05/01/2002

	Rates	Fringes
CLAY COUNTY (City of Moorhead & a radius of 5 miles NE & South of the city limits) & POLK COUNTY (East Grand Forks & an area 5 miles outside city limits):		
CARPENTERS (Treatment Plants)	16.00	8.90
PILEDRIVERMEN (Treatment Plants)	18.02	8.90

CARP1348C 05/01/2000

	Rates	Fringes
CLAY (Excluding Moorhead & up to 5 miles radius), POLK (Excluding East Grand Forks & up to 5 miles radius) & ST. LOUIS COUNTIES:		
MILLWRIGHTS (Treatment Plants)	21.66	10.29

CARP1382D 05/01/2002

	Rates	Fringes
OLMSTED COUNTY		
CARPENTERS & PILEDRIVERMEN (Treatment Plants)	23.43	6.88

CARP1382H 05/01/2002

	Rates	Fringes
HOUSTON COUNTY		
CARPENTERS & PILEDRIVERMEN (Treatment Plants)	19.12	6.88

CARP1382P 05/01/2002

	Rates	Fringes

HOUSTON AND OLMSTED COUNTIES

CARPENTERS & PILEDRIVERMEN (Heavy, Sewer, and Water Lines)	22.09	8.83

ELEC0110K 05/01/2002

ANOKA (Except Anoka & Fridley Townships & the cities of Andover, Anoka, Columbia Heights, Coon Rapids, Fridley, Hilltop, Ramsey & Spring Lake Park), CHISAGO, DAKOTA, ISANTI, RAMSEY, SHERBURNE (East of Becker & Santiago Townships) & WASHINGTON COUNTIES:

	Rates	Fringes
ELECTRICIANS	29.45	28.5%+5.77
CABLE SPLICERS	30.45	28.5%+5.77

ELEC0110L 03/01/1998

	Rates	Fringes
SOUND, SIGNAL & COMMUNICATIONS WORK:		
Technician (Installation of Controller Only)	19.22	.58+a+b
Installer (Excluding Controller Work)	11.31	.34+a+b

FOOTNOTES:

a. 1 year's service - 5 days' paid vacation; 2 years' service - 10 days' paid vacation; 5 years' service - 12 days' paid vacation; 7 years' service - 14 days' paid vacation; 9 years' service - 16 days' paid vacation; 11 years' service - 18 days' paid vacation; 12 years' service - 20 days' paid vacation

b. 8 Paid Holidays: New Year's Day; Memorial Day; 4th of July; Labor Day; Thanksgiving Day; Day After Thanksgiving; the normal work day preceding Christmas Day; & Christmas Day

---

ELEC0160D 03/31/2002

	Rates	Fringes
LINE CONSTRUCTION:		
Lineman; Cable Splicer; Dynamiter; Special Equipment Operator; & Technician	27.51	10.01
Equipment Operator	23.66	8.90
Groundman/Truck Driver; & Pole Treating Truck Driver	19.26	7.64
LINE CLEARANCE:		
Tree Trimmer; Tractor Operator	18.44	7.40
Groundman/Truck Driver	12.91	5.81
Groundman	11.99	5.55

ELEC0242G 06/01/2002

	Rates	Fringes

ST. LOUIS COUNTY (South part bounded on the north by the north line of Kelsey Township extended east & west):

ELECTRICIANS	26.14	49.5%

ELEC0292F 05/01/2002

	Rates	Fringes

ANOKA (Andover, Anoka, Columbia Heights, Coon Rapids, Fridley, Hilltop, Ramsey, Spring Lake Park), BENTON AND SHERBURNE COUNTIES (East of Hwy 25 to Hwy 10 and an imaginary line straight West to the Missippi River), CARVER, HENNEPIN, SCOTT, AND WRIGHT COUNTIES

ELECTRICIANS:		
Electricians	30.00	14.66
Cable Splicers	31.00	14.19

ELEC0292J 05/01/2002

	Rates	Fringes

BENTON AND SHERBURNE COUNTIES (West of Hwy 25 to Hwy 10 and an imaginary line straight West to the Mississippi River), AND STEARNS COUNTY

ELECTRICAL CONTRACTS $500,000 AND OVER:		
Electricians	30.00	14.19
Cable Splicers	31.00	14.66
ELECTRICAL CONTRACTS UNDER $500,000:		
Electricians	27.04	13.29
Cable Splicers	28.04	13.78

ELEC0294I 06/01/2002

	Rates	Fringes

ST. LOUIS COUNTY (North part bounded on the south by the south line of Ellsburg Township, extended east & west):

ELECTRICIANS	26.09	44.5%
CABLE SPLICERS	26.64	44.5%

ELEC0343N 06/01/2002

	Rates	Fringes

HOUSTON AND OLMSTED COUNTIES

ELECTRICIAN	24.72	15%+8.27
CABLE SPLICER	25.72	15%+8.27

ELEC1426J 06/01/2002

	Rates	Fringes

CLAY & POLK COUNTIES

ELECTRICIAN	20.57	12%+6.20

CABLE SPLICER	21.60	12%+6.20

ENGI0049Y 05/01/2002

	Rates	Fringes
POWER EQUIPMENT OPERATORS (Treatment Plants):		
GROUP 1	29.94	8.45
GROUP 2	29.60	8.45
GROUP 3	28.19	8.45
GROUP 4	27.85	8.45
GROUP 5	27.68	8.45
GROUP 6	26.17	8.45
GROUP 7	25.05	8.45
GROUP 8	23.04	8.45

POWER EQUIPMENT OPERATOR CLASSIFICATIONS

GROUP 1 - Helicopter Operator; Truck & Crawler Crane with 200' of Boom & Over, including Jib ($.50 premium with 300' of Boom & over, including jib); & Tower Crane 250' & Over

GROUP 2 - Truck & Crawler Crane with 150' of Boom, up to but not including 200' of Boom, including Jib; & Tower Crane 200' & Over, Concrete Pump 164 ft Boom.

GROUP 3 - Traveling Tower Crane; Master Mechanic; Pile Driving Operator (when 3 drums are used); Truck & Crawler Crane, up to but not including 150' of Boom, including Jib; Derrick (Guy & Stiffleg); Tower Crane (Stationary) up to 200'; & All Terrain Vehicle Crane, Boom Truck over 100 ft.

GROUP 4 - Crawler Backhoe; Hoist Engineer (3 drums or more); Locomotive Operator; Overhead Crane Operator (inside building perimeter); & Tractor Operator with Boom

GROUP 5 - Air Compressor Operator 450 CFM or Over (2 or more machines); Pump Operator and/or Conveyor Operator (2 or more machines); Mechanic; Pumpcrete or Complaco type Machine Operator; Forklift; Boom Truck up to 100 ft; Concrete Mixer Operator; Drill Rig - Heavy Rotary or Churn when used for Caisson Drilling for Elevator Cylinder or Building Construction; Front End Loader (Over 1 cu. yd.); Hoist Engineer (1 or 2 drums); Straddle Carrier Operator; Power Plant Engineer (100 KW & over on multiples equal to 100KW & over); Tractor Operator over D2; & Well Point Pump Op.

GROUP 6 - Concrete Batch Plant Operator; Gunite Operator; Tractor Operator D2 or similar size; & Front End Loader Operator, up to 1 cu. yd.

GROUP 7 - Air Compressor Operator 600 CFM or Over; Pump and/or Conveyor Operator; Brakeman; Pick-up Sweeper (1 cu. yd. & over Hopper capacity); Truck Crane Oiler; & Welding Machine Operator, Fireman temporary heat.

GROUP 8 - Mechanical Space Heater (Temporary Heat); Oiler or Greaser; & Elevator Operator

---

ENGI0049Z 05/01/2002

	Rates	Fringes
POWER EQUIPMENT OPERATORS (Heavy, Sewer & Water lines):		
AREA 1:		
GROUP 1	26.27	8.45
GROUP 2	25.72	8.45
GROUP 3	25.54	8.45
GROUP 4	25.42	8.45
GROUP 5	22.38	8.45
GROUP 6	21.17	8.45
AREA 2:		
GROUP 1	24.06	8.45
GROUP 2	23.61	8.45
GROUP 3	23.44	8.45
GROUP 4	23.31	8.45
GROPU 5	20.74	8.45
GROUP 6	19.87	8.45
AREA 3:		
GROUP 1	21.65	8.45
GROUP 2	20.72	8.45
GROUP 3	20.52	8.45
GROUP 4	20.41	8.45
GROUP 5	18.70	8.45
GROUP 6	18.10	8.45

AREA DESCRIPTIONS

AREA 1 (METRO): ANOKA, CARVER, CHISAGO (South of the Northern boundary of T.34-N & that part consisting substantially of the cities of Thomson, Cloquet, Scanlon & Carlton), DAKOTA, HENNEPIN, RAMSEY, SCOTT, SHERBURNE (South of the northern boundary of T. 33-N & East of the Western boundary of R. 27-W), ST. LOUIS, WASHINGTON & WRIGHT (East of & inclu. Hwy #25) COUNTIES

AREA 2 (EASTERN): BENTON (East of the Western right of way of HWY #10), CHISAGO (Remainder), HOUSTON, ISANTI, OLMSTED, SHERBURNE (Remainder), STEARNS (East of the Western right of way of Hwy #15), and WRIGHT (Remainder) COUNTIES

AREA 3 (WESTERN): BENTON (Remainder) and STEARNS (Remainder) COUNTIES

POWER EQUIPMENT OPERATOR CLASSIFICATIONS

GROUP 1 - Helicopter Pilot; *Crane with over 135' Boom, excluding Jib; Dragline, Crawler, Hydraulic Backhoe and/or other similar equipment with Shovel-type Controls 3 cu. yds. & over Mfg. rated Cap.; & Pile Driving when 3 Drums are in use

GROUP 2 - Cableway; Concrete Mixer, Stationary Plant over 34E; Derrick (Guy or Stiffleg) (Power) (Skids or Stationary); Diver; Dragline, Crawler, Hydraulic Backhoe and/or similar equipment

with Shovel-type Controls, up to 3 cu. yds. Mfg. rated cap.; Dredge or Engineers, Dredge (Power) & Engineer; Front End Loader, 5 cu. yds. & over; Grader or Motor Patrol, Finishing Earthwork & Bituminous; Locomotive Crane; Master Mechanic; Mixer (Paving) Concrete Paving, Road; Mole, including Power Supply; Mucking Machine, including Mucking Operations, Conway or similar type; Piledriving; Refrigeration Plant Engineer; Tandem Scraper; Tractor - Boom type; Truck Crane - Crawler Crane; & Tugboat 100 HP & over

GROUP 3 - Dual Tractor; Elevating Grader; Pumpcrete; Scraper - Struck Cap. 32 cu. yds. & over; & Self-propelled Traveling Soil Stabilizer

GROUP 4 - Air Track Rock Drill; Articulated Hauler Terex, Caterpillar or similar type; Asphalt Bituminous Stabilizer Plant; Automatic Road Machine (CMI or similar); Backfiller; Bituminous Roller (8 Tons & over); Bituminous Spreader & Finishing (Power); Boom Truck (Power operated Boom); Brokk or R.T.C. 750 Remote Control or Similar types with all attachments; Cat & Scraper; Cat Tractor with Rock Wagons or similar types; Challenger 75-D or 85-D when pulling Scraper or Bulldozer; Chip Harvester & Tree Cutter over 150 HP; Concrete Batch Plant; Concrete Mixer on jobsite over 14S; Concrete Mobile; Crushing Plant (Gravel & Stone) or Gravel Washing, Crushing & Screening Plant; Curb Machine; Directional Boring Machine; Dope Machine (Pipeline); Drill Rigs, Heavy Rotary or Churn or Cable Drill; Fork Lift or Straddle Carrier; Fork Lift or Lumber Stacker; Front End Loader, over 1 cu. yd.; Hoist Engineer (Power); Hydraulic Tree Planter; Launcherman (Tankerman or Pilot License); Lead Greaser; Locomotive; Mechanic; Milling, Grinding & Planing Machine; Morbark Tub Grinder or Similar Type; Multiple Machines, such as Air Compressors, Welding Machines, Generators, Pumps; Pavement Breaker or Tamping Machine (Power Driven) Mighty Mite or similar type; Pickup Sweeper, 1 cu. yd. & over Hopper Cap.; Pipeline Wrapping, Cleaning or Bending Machine; Power Plant Engineer, 100 K.W.H. & over; Power Actuated Horizontal Boring Machine, over 6"; Pugmill; Rubber- tired Farm Tractor, Backhoe Attach.; Scraper, up to 32 cu. yds.; Skid Steer Loader, over 1 cu. yd. with Backhoe Attachment; Slip Form (Power Driven) (Paving); Tie Tamper & Ballast Machine; Tractor, Bulldozer; Tractor Operator, over 50 HP with Power Take-off; Trenching Machine (Sewer, Water, Gas); Well Point Installation; & Dismantling or Repair Mechanic

GROUP 5 - Air Compressor, 600 CFM or over; Bituminous Roller (Under 8 tons); Bituminous Rubber-tired Roller; Bituminous Spreader & Bituminous Finishing Machine Tender (Power); Concrete Distributor & Spreader Finishing Machine, Longitudinal Float, Joint Machine, & Spray; Concrete Saw (Multiple Blade) (Power Operated); Form Trench Digger (Power); Front End Loader, up to & incl. 1 cu. yd.; Grader (Motor Patrol); Gunite Gunall; Hydraulic Log Splitter; Loader (Barber Greene or similar type); Payhauler or similar type; Post Hole Driving Machine/Post Hole Augar; Power Actuated Auger & Boring Machine; Power Actuated Jack; Pump; Self-propelled Chip Spreader (Flaherty or similar);

Sheep Foot Compactor with Blade - 200 HP & over; Shouldering Machine (Power) Apsco or similar type inclu. self-propelled Sand & Chip Spreader; Stump Chipper & Tree Chipper; Tractor Operator, Bulldozer, 50 HP or less; & Tree Farmer (Machine)

GROUP 6 - Challenger 75-D or 85-D when pulling Disk or Roller; Conveyor; Dredge Deck Hand; Fireman or Tank Car Heater; Gravel Screening Plant (Portable not Crushing or Washing); Greaser (Truck or Tractor); Leverman; Mechanic Tender; Mechanic, Space Heater (Temporary Heat); Oiler (Power Shovel, Crane, Dragline); Power Sweeper; Roller on Gravel Compaction; Self-propelled Vibrating Packer (35 HP & over); Sheep Foot Roller; Tractor,

Wheel Type (over 50 HP); & Truck Crane Oiler

*CRANE OVER 135' BOOM, EXCLUDING JIB - $ .25 PREMIUM;
CRANE OVER 200' BOOM, EXCLUDING JIB - $ .50 PREMIUM

UNDERGROUND WORK:
TUNNELS, SHAFTS, ETC. - $ .25 PREMIUM
UNDER AIR PRESSURE - $ .50 PREMIUM

HAZARDOUS WASTE PROJECTS (PPE Required):
LEVEL A - $1.25 PREMIUM
LEVEL B - $ .90 PREMIUM
LEVEL C - $ .60 PREMIUM

IRON0512M 05/01/2003

	Rates	Fringes
ANOKA, BENTON, CARVER, CHISAGO, DAKOTA, HENNEPIN, HOUSTON, ISANTI, OLMSTED, RAMSEY, SCOTT, SHERBURNE, STEARNS, WASHINGTON & WRIGHT COUNTIES		
IRONWORKERS	29.50	11.84

IRON0563L 05/01/2003

	Rates	Fringes
ST. LOUIS COUNTY		
IRONWORKERS	24.33	13.75

IRON0793F 05/01/2002

	Rates	Fringes
CLAY & POLK COUNTIES		
IRONWORKERS	19.14	9.73

LABO0010J 05/01/2002

	Rates	Fringes
LANDSCAPERS: Seeding, Sodding & Planting of evergreen & deciduous shrubs & trees	13.34	5.05

LABO0132I 01/01/2000

	Rates	Fringes
ANOKA, BENTON, CARVER, CHISAGO, CLAY, DAKOTA, HENNEPIN, HOUSTON, ISANTI, OLMSTED, RAMSEY, SCOTT, SHERBURNE, STEARNS, WASHINGTON & WRIGHT COUNTIES:		
LABORERS, Asbestos Abatement	19.16	6.62

LABO0132M 05/01/2002

	Rates	Fringes
ANOKA, CARVER, CHISAGO, DAKOTA, HENNEPIN, ISANTI, RAMSEY, SCOTT, SHERBURNE, WASHINGTON & WRIGHT COUNTIES		
LABORERS (Treatment Plants):		
GROUP 1	25.73	7.71
GROUP 2	26.23	7.71
GROUP 3	26.73	7.71

LABORERS CLASSIFICATIONS

GROUP 1 - Construction Craft Laborer; Flagperson/Traffic Control; Carpenter Tender; Concrete; Damp Proofer Below Grade; Drill Runner Tender; Dumpman - Dirt, Asphalt, Concrete, Cement; Heater Tender; Hot Tar Caulker - Corker; Joist Handler; Material Handler - Power Buggy; Rebar; Snow Blower Operator; Signal Person; Asbestos and Hazardous Waste Technician; Hydro Blast or Waterblast; Chain Saw Operator; Concrete Saw, Drill Operator; Concrete Vibrator; Demolition & Remodeling, Excluding Demolition of an entire Structural System; Mason Tender; Mortar Mixer - Cement or any other substitute Material or Composition; Pipe Handler; Pneumatic & Electric Tool, Jackhammer, Paving Buster, Chipping Hammer, Tamper Operator, etc.; Swing Stage Line Scaffold (Not including Patent" Scaffolding); Torchman - Gas, Electric, Thermal or similar device; & Remote Control Tamper

GROUP 2 - Caisson Work; Mounted Wall Saw Operator; Nozzle Operator - Gunite, Cement, Sandblasting; Pipelayer; Pipe Rehab Technical, including Cleaning, Cutting, Cameraing, etc.; Refractory Worker; Sheeting Setter & Driver, Heavy Building Excavation; Underground Work - Open Ditch or Excavation 8' Below Grade; & Underpinning

GROUP 3 - Driller for Blasting purposes; Dynamite Blaster or substitute products Tovex TR, Water, Gas, Gel, Bristar, Silent Dynamite, etc.

LABO0132P 06/01/1999

	Rates	Fringes
ANOKA, CARVER, CHISAGO, DAKOTA, HENNEPIN, ISANTI, RAMSEY, SCOTT, SHERBURNE, WASHINGTON & WRIGHT COUNTIES:		
PLASTER TENDERS (Treatment Plants)	23.85	5.59

LABO0405D 05/01/1999

	Rates	Fringes
HOUSTON COUNTY:		
LABORERS (Treatment Plants):		
GROUP 1	15.49	4.89
GROUP 2	16.19	4.89
FLAGPERSON	13.66	4.89
OLMSTED COUNTY:		
LABORERS (Treatment Plants):		
GROUP 1	16.94	4.89
GROUP 2	17.64	4.89
FLAGPERSON	15.06	4.89

LABORER CLASSIFICATIONS

GROUP 1 - Construction; General; Carpenter Tender; Concrete; Damp Proofer Below Grade; Dumpman - Dirt, Asphalt, Concrete, Cement; Heater Tender; Hot Tar Caulker - Corker; Firewatch; Joist Handler; Material Handler - Power Buggy; Rebar; Signalperson; Snow Blower Operator; Demolition & Wrecking, Including Remodeling; Chain Saw Operator; Concrete Saw, Drill Operator; Concrete Vibrator; Pipe Handler; Pneumatic & Electric Tool, Jackhammer, Paving Buster, Chipping Hammer, Tamper Operator, etc.; Swing Stage Line Scaffold (not including "Patent" Scaffolding); & Remote Control Tamper

GROUP 2 - Pipe Rehab Technician, including Cleaning, Cutting, Cameraing, etc.; Caisson Work; Nozzle Operator - Gunite, Cement, Sandblasting; Pipelayer; Refractory Worker; Sheeting Setter & Driver, Heavy Building Excavation; Underground Work - Open Ditch or Excavation 8' Below Grade; Underpinning; Mason Tender; Mortar Mixer - Cement or any other substitute Material or Composition; Driller for Blasting Purposes; Dynamite Blaster or substitute products Tovex TR, Water, Gas, Gel, Bristar, Silent Dynamite, etc.

LABO0405E 05/01/2002

	Rates	Fringes
HOUSTON & OLMSTED COUNTIES		
LABORERS (Heavy, Sewer & Water Lines):		
GROUP 1	19.59	5.96
GROUP 2	19.79	5.96
GROUP 3	19.94	5.96
GROUP 4	20.04	5.96
GROUP 5	20.29	5.96
GROUP 6	21.59	5.96

LABORER CLASSIFICATIONS

GROUP 1: Construction; Bituminous Batcherperson (Stationary

Plant); Bituminous Worker - Shoveler, Raker, Floater, Squeegee, Utility; Blaster Tender; Brick Tender; Carpenter Tender; Cement Coverperson Batch Truck; Cement Handler - Bulk, Bag; Concrete Batcher person; Concrete Handler, Caisson, Footings, Columns, Piling, Slabs, etc.; Concrete Longitudinal Float Operator (Manual Bullfloat on Paving); Concrete Shoveler, Tamper & Puddler (Paving); Conduit Layer; Curb Setter; Damp Proofer Below Grade; Demolition of an entire Structural System, Excluding

Remodeling; Drill Runner Tender; Dump Operator (Dirt, Paver, Dumping Batch Truck, etc.); Fabric Installer; Grade Checker; Hydrant & Valve Setter; Hydro Blast or Waterblaster; Joint Filler (Concrete Pavement); Kettleperson (Bituminous or Lead); Labor Wrecking Demolition; Mortar Mixer; Pipe Handler; Power Buggy Operator; Pump Operator (Less than 6"); Retaining Wall Installation; Sand Cushion Bedmaker; Signal person; Slip Lining of Utility Lines; Soil Stabilizer; Sound Barrier & Guard Rail Installation; Squeegee person; Stabilizing Batcher person (Stationary Plant); Temporary Heaters & Blower Tender; Top Person (Sewer, Water or Gas Trench); Traffic Controller (Traffic Barriers) & Transit/Level; Flagperson. Pipelayer, Laser Beam (sewer, water, gas) $1.50 above Group 1 rate. Blasting Person (dynamite or substitute products) $3.00 above Group 1 rate.

GROUP 2: Chain Saw; Compaction Equipment (Hand Operated or Remote Control); Concrete Drilling; Concrete Mixer Operator; Concrete Sawer; Concrete Vibrator; Ditch & Other Work more than 8' Below starting level of manual work; Formsetter; Joint Sawer, Mortar; Pipe Fuser/Technician; Pneumatic Tools, Jackhammer, Paving Buster, Chipping Hammer, etc.; Remote Control Demo Machine & Related Accessories (Electric/Hydraulic); Stone Tender/Mason Tender; & Torchperson - Gas, Electric, Thermal or Similar Device

GROUP 3: Brick or Block Paving Setter; Caisson Work; Cofferdam Work

GROUP 4: Bottom person (Sewer, Water or Gas Trench - More than 8' Below starting level or manual Work); Cement Gun Operator (1 1/2" or Over); Driller - Air Track or Similar; & Nozzle Operator (Gunite, Sandblasting, Cement)

GROUP 5: Asbestos & Hazardous Waste Tech; Tunnel Laborer; Tunnel Miner; Tunnel Miner Tender; Underground Laborer; & Underpinning

GROUP 6: Tunnel Miner Under Pressure

LABO0563C 05/01/2001

	Rates	Fringes
BENTON, CLAY (Except City limits of Moorhead) & STEARNS COUNTIES:		
LABORERS (Treatment Plants):		
Total Construction Projects Over $950,000:		
GROUP 1	18.02	6.72
GROUP 2	18.77	6.72
GROUP 3	19.02	6.72

FLAGPERSON	16.11	6.72

Total Construction Projects Under $950,000:

GROUP 1	16.27	6.72
GROUP 2	17.02	6.72
GROUP 3	17.27	6.72
FLAGPERSON	14.54	6.72

LABORER CLASSIFICATIONS

GROUP 1 - Construction; Asbestos & Hazardous Waste Technician; Carpenter Tender; Chain Saw Operator; Concrete Saw, Drill Operator; Concrete Vibrator; Concrete; Damp Proofer Below Grade; Demolition & Remodeling, Excluding Demolition of an entire Structural System; Drill Runner Tender; Dump Person - Dirt, Asphalt, Concrete, Cement; Heater Tender; Hot Tar Caulker-Corker; Hydro Blast or Waterblaster; Joist Handler; Mason Tender; Material Handler - Power Buggy; Mortar Mixer - Cement or any other Substitute material or Composition; Pipe Handler; Pneumatic & Electric Tools, Jackhammer, Paving Buster, Chipping Hammer, Tamper Operator, etc.; Remote Control Tamper; Signal Person; Snow Blower Operator; Swing Stage Line Scaffold (Not including "Patent" Scaffolding); Torchperson - Gas, Electric, Thermal or similar device

GROUP 2 - Caisson Work; Mounted Wall Saw Operator; Nozzle Operator - Gunite, Cement, Sandblasting; Pipelayer; Pipe Rehab Technician (Including Cleaning, Cutting, Cameraing, etc.); Refractory Worker; Sheeting Setter & Driver, Heavy Building Excavation; Underground Work - Open Ditch or Excavation 8' Below Grade; & Underpinning

GROUP 3 - Driller for Blasting Purposes; Dynamite Blaster or substitute products Tovel TR, Water, Gas, Gel, Bristar, Silent Dynamite, etc.

LABO0563I 05/01/2002

	Rates	Fringes
LABORERS (Heavy, Sewer & Water Lines):		
AREA 1:		
GROUP 1	22.89	6.21
GROUP 2	23.09	6.21
GROUP 3	23.24	6.21
GROUP 4	23.34	6.21
GROUP 5	23.59	6.21
GROUP 6	24.89	6.21
AREA 2:		
GROUP 1	22.17	5.96
GROUP 2	22.37	5.96
GROUP 3	22.52	5.96
GROUP 4	22.62	5.96
GROUP 5	22.87	5.96
GROUP 6	24.17	5.96
AREA 3:		
GROUP 1	21.62	6.51
GROUP 2	21.82	6.51

GROUP 3	21.97	6.51
GROUP 4	22.07	6.51
GROUP 5	22.32	6.51
GROUP 6	23.62	6.51
AREA 4:		
GROUP 1	18.54	5.86
GROUP 2	18.74	5.86
GROUP 3	18.89	5.86
GROUP 4	18.99	5.86
GROUP 5	19.24	5.86
GROUP 6	20.54	5.86
AREA 5:		
GROUP 1	19.59	5.96
GROUP 2	19.79	5.96
GROUP 3	19.94	5.96
GROUP 4	20.04	5.96
GROUP 5	20.29	5.96
GROUP 6	21.59	5.96
AREA 6:		
GROUP 1	15.74	5.21
GROUP 2	15.94	5.21
GROUP 3	16.09	5.21
GROUP 4	16.19	5.21
GROUP 5	16.44	5.21
GROUP 6	17.74	5.21
AREA 7:		
GROUP 1	14.44	5.16
GROUP 2	14.64	5.16
GROUP 3	14.79	5.16
GROUP 4	14.89	5.16
GROUP 5	14.03	5.16
GROUP 6	15.14	5.16

AREA DESCRIPTIONS

AREA 1 (District 1): ANOKA, CARVER, CHISAGO, DAKOTA, HENNEPIN, ISANTI, RAMSEY, SCOTT, SHERBURNE, WASHINGTON & WRIGHT COUNTIES

AREA 2 (District 2A): ST. LOUIS COUNTY (South of T. 55 N):

AREA 3 (District 2B): ST. LOUIS COUNTY (North of T. 55 N)

AREA 4 (District 3A): BENNTON & STEARNS COUNTIES

AREA 5 (District 3B): HOUSTON & OLMSTED COUNTIES

AREA 6 (District 4): CLAY (Excluding City Limits of Moorhead) & POLK (Excluding City Limits of East Grand Forks) COUNTIES

AREA 7 (ND DC): CLAY (City Limits of Moorhead) and POLK (City Limits of East Grand Forks) COUNTIES

LABORER CLASSIFICATIONS

GROUP 1: Construction; Bituminous Batcherperson (Stationary Plant); Bituminous Worker - Shoveler, Raker, Floater, Squeegee,

Utility; Blaster Tender; Brick Tender; Carpenter Tender; Cement Coverperson Batch Truck; Cement Handler - Bulk, Bag; Concrete Batcher person; Concrete Handler, Caisson, Footings, Columns, Piling, Slabs, etc.; Concrete Longitudinal Float Operator (Manual Bullfloat on Paving); Concrete Shoveler, Tamper &

Puddler (Paving); Conduit Layer; Curb Setter; Damp Proofer Below Grade; Demolition of an entire Structural System, Excluding Remodeling; Drill Runner Tender; Dump Operator (Dirt, Paver, Dumping Batch Truck, etc.); Fabric Installer; Grade Checker; Hydrant & Valve Setter; Hydro Blast or Waterblaster; Joint Filler (Concrete Pavement); Kettleperson (Bituminous or Lead); Labor Wrecking Demolition; Mortar Mixer; Pipe Handler; Power Buggy Operator; Pump Operator (Less than 6"); Retaining Wall Installation; Sand Cushion Bedmaker; Signal person; Slip Lining of Utility Lines; Soil Stabilizer; Sound Barrier & Guard Rail Installation; Squeegee person; Stabilizing Batcher person (Stationary Plant); Temporary Heaters & Blower Tender; Top Person (Sewer, Water or Gas Trench); Traffic Controller (Traffic Barriers) & Transit/Level; Flagperson. Pipelayer, Laser Beam (sewer, water, gas) $1.50 above Group 1 rate. Blasting Person (dynamite or substitute products) $3.00 above Group 1 rate.

GROUP 2: Chain Saw; Compaction Equipment (Hand Operated or Remote Control); Concrete Drilling; Concrete Mixer Operator; Concrete Sawer; Concrete Vibrator; Ditch & Other Work more than 8' Below starting level of manual work; Formsetter; Joint Sawer, Mortar; Pipe Fuser/Technician; Pneumatic Tools, Jackhammer, Paving Buster, Chipping Hammer, etc.; Remote Control Demo Machine & Related Accessories (Electric/Hydraulic); Stone Tender/Mason Tender; & Torchperson - Gas, Electric, Thermal or Similar Device

GROUP 3: Brick or Block Paving Setter; Caisson Work; Cofferdam Work

GROUP 4: Bottom person (Sewer, Water or Gas Trench - More than 8' Below starting level or manual Work); Cement Gun Operator (1 1/2" or Over); Driller - Air Track or Similar; & Nozzle Operator (Gunite, Sandblasting, Cement)

GROUP 5: Asbestos & Hazardous Waste Tech; Tunnel Laborer; Tunnel Miner; Tunnel Miner Tender; Underground Laborer; & Underpinning

GROUP 6: Tunnel Miner Under Pressure

LABO0580B 04/19/1999

	Rates	Fringes
CLAY (Moorhead) & POLK (East Grand Forks) COUNTIES:		
LABORERS (Treatment Plants)	14.05	4.34

LABORER CLASSIFICATIONS

Common; Concrete Bucket; Power Tool Operator; Mortar Mixer; Brick & Plasterers' Tender; Jackhammer Work; Hod Carrier; Non-Metallic Pipe Layer; Gas Line Wrapping or Taping; Cutting

Torch for Demolition; Sandblaster & Gunnite Pot Tender; & Hose Tender

---

LABO1091B 05/01/1998

	Rates	Fringes
ST. LOUIS COUNTY (South of T 55 N):		
LABORERS (Treatment Plants):		
GROUP 1	15.95	5.39
GROUP 2	16.10	5.39
GROUP 3	16.35	5.39
GROUP 4	16.65	5.39
FLAGPERSON	14.05	5.39

LABORER CLASSIFICATIONS

GROUP 1 - General; Carpenter Tender; Concrete Laborer; Damp Proofer Below Grade; Drill Runner Tender; Dumpman - Dirt, Asphalt, Concrete, Cement; Heater Tender; Hot Tar Caulker - Corker; Joist Handler; Rebar; Snow Blower Operator; Signalperson; Material Handler (All types Power Buggy); Fire Control; Asbestos Removal; & Hazardous Waste

GROUP 2 - Chain Saw Operator; Concrete Saw, Drill Operator; Concrete Vibrator; Demolition & Wrecking, Excluding Remodeling; Gunite, Sandblasting Machine Operator; Mason Tender; Mortar Mixer - Cement or any other substitute material or composition; Pipe Handler; Pneumatic & Electric Tools, Jackhammer, Paving Buster, Chipping Hammer, Tamper Operator, etc.; Swing Stage Line Scaffold (not including "patent" scaffolding); Torchman - Gas, Electric, Thermal or similar device; & Hydroblast

GROUP 3 - Caisson Work; Nozzle Operator - Gunite, Cement, Sandblasting; Pipelayer; Refractory Worker; Sheeting Setter & Driver, Heavy Building Excavation; Underground Work - Open Ditch or Excavation 8' Below Grade; Underpinning; & Hod Carrier

GROUP 4 - Driller for Blasting Purposes; Dynamite Blasters or substitute products Tovex TR, Water, Gas, Gel, Bristar, Silent Dynamite, etc.; Asbestos Abatement Worker; & Hazardous Waste Worker

---

LABO1091D 05/01/2002

	Rates	Fringes
ST. LOUIS COUNTY (South of TR 55):		
LABORERS:		
Asbestos Abatement	20.80	7.41

LABO1091G 05/01/2002

	Rates	Fringes

ST. LOUIS COUNTY (South of T. 55 N)

LABORERS (Heavy, Sewer & Water Lines):

GROUP 1	22.17	5.96
GROUP 2	22.37	5.96
GROUP 3	22.52	5.96
GROUP 4	22.62	5.96
GROUP 5	22.87	5.96
GROUP 6	24.17	5.96

LABORER CLASSIFICATIONS

GROUP 1: Construction; Bituminous Batcherperson (Stationary Plant); Bituminous Worker - Shoveler, Raker, Floater, Squeegee, Utility; Blaster Tender; Brick Tender; Carpenter Tender; Cement Coverperson Batch Truck; Cement Handler - Bulk, Bag; Concrete Batcher person; Concrete Handler, Caisson, Footings, Columns, Piling, Slabs, etc.; Concrete Longitudinal Float Operator (Manual Bullfloat on Paving); Concrete Shoveler, Tamper & Puddler (Paving); Conduit Layer; Curb Setter; Damp Proofer Below Grade; Demolition of an entire Structural System, Excluding Remodeling; Drill Runner Tender; Dump Operator (Dirt, Paver, Dumping Batch Truck, etc.); Fabric Installer; Grade Checker; Hydrant & Valve Setter; Hydro Blast or Waterblaster; Joint Filler (Concrete Pavement); Kettleperson (Bituminous or Lead); Labor Wrecking Demolition; Mortar Mixer; Pipe Handler; Power Buggy Operator; Pump Operator (Less than 6"); Retaining Wall Installation; Sand Cushion Bedmaker; Signal person; Slip Lining of Utility Lines; Soil Stabilizer; Sound Barrier & Guard Rail Installation; Squeegee person; Stabilizing Batcher person (Stationary Plant); Temporary Heaters & Blower Tender; Top Person (Sewer, Water or Gas Trench); Traffic Controller (Traffic Barriers) & Transit/Level; Flagperson. Pipelayer, Laser Beam (sewer, water, gas) $1.50 above Group 1 rate. Blasting Person (dynamite or substitute products) $3.00 above Group 1 rate.

GROUP 2: Chain Saw; Compaction Equipment (Hand Operated or Remote Control); Concrete Drilling; Concrete Mixer Operator; Concrete Sawer; Concrete Vibrator; Ditch & Other Work more than 8' Below starting level of manual work; Formsetter; Joint Sawer, Mortar; Pipe Fuser/Technician; Pneumatic Tools, Jackhammer, Paving Buster, Chipping Hammer, etc.; Remote Control Demo Machine & Related Accessories (Electric/Hydraulic); Stone Tender/Mason Tender; & Torchperson - Gas, Electric, Thermal or Similar Device

GROUP 3: Brick or Block Paving Setter; Caisson Work; Cofferdam Work

GROUP 4: Bottom person (Sewer, Water or Gas Trench - More than 8' Below starting level or manual Work); Cement Gun Operator (1 1/2" or Over); Driller - Air Track or Similar; & Nozzle Operator (Gunite, Sandblasting, Cement)

GROUP 5: Asbestos & Hazardous Waste Tech; Tunnel Laborer; Tunnel Miner; Tunnel Miner Tender; Underground Laborer; & Underpinning

GROUP 6: Tunnel Miner Under Pressure

LABO1097B 05/01/2001

	Rates	Fringes
POLK COUNTY (Excluding the city limits of East Grand Forks):		
LABORERS (Treatment Plants):		
Projects Under $760,000 including Mechanical & Electrical:		
GROUP 1	13.48	5.06
GROUP 2	13.67	5.06
GROUP 3	13.84	5.06
FLAGPERSON	11.88	5.06
Projects $760,000 & Over, including Mechanical & Electrical:		
GROUP 1	15.68	5.06
GROUP 2	16.08	5.06
GROUP 3	16.28	5.06
FLAGPERSON	13.98	5.06

LABORER CLASSIFICATIONS

GROUP 1 - Construction; Carpenter Tender; Concrete; Damp Proofer Below Grade; Dump Person - Dirt, Asphalt, Concrete & Cement; Heater Tender; Hot Tar Caulker - Corker; Joist Handler; Material Handler - Power Buggy; Rebar; Signal Person; & Snow Blower Operator; Chain Saw Operator; Concrete Vibrator; Demolition & Wrecking, Excluding Remodeling; Mason Tender; Mortar Mixer - Cement or Any Other Substitute Material or Composition; Pipe Handler; Pneumatic & Electric Tool, Jackhammer, Paving Buster, Chipping Hammer, Tamper Operator, Etc.; Swing Stage Line Scaffold (Not including "Patent" Scaffolding); & Torch Person - Gas, Electric, Thermal or similar device; Scrapping, Sweeping & Clean-up; Skid Steer, Forklift (Incidental Use)

GROUP 2 - Creosote Handler; Caisson Work; Concrete Saw Drill Operator; Nozzle Operator - Gunite, Cement, Sandblasting; Pipelayer; Sheeting Setter & Driver, Heavy Building Excavation; Underground Work - Open Ditch or Excavation 8' Below Grade; Underpinning; & High Pay/Low Pay - 40 ft. Over or Under Ground Floor without Conventional Floor Areas; Pipe-Rehab Technician, including Cleaning, Cutting, Camering, etc.; & Wall Mounted Saw Operator

GROUP 3 - Driller for Blasting Purposes; Dynamite Blaster or substitute products; & Tovex TR, Water, Gas, Gel, Bristar, Silent Dynamite, etc.

LABO1097D 05/01/2001

	Rates	Fringes
ST. LOUIS COUNTY (North of T 55 N):		
LABORERS (Treatment Plants):		

GROUP 1	19.67	5.81
GROUP 2	20.07	5.81
GROUP 3	20.37	5.81
Flagperson	17.77	5.81
Refractory Worker	21.67	5.81

LABORERS CLASSIFICATIONS

GROUP 1 - Construction; Carpenter Tender; Concrete; Damp Proofer Below Grade; Dump Person - Dirt, Asphalt, Concrete & Cement; Heater Tender; Hot Tar Caulker - Corker; Joist Handler; Material Handler - Power Buggy; Rebar; Signal Person; & Snow Blower Operator; Chain Saw Operator; Concrete Vibrator; Demolition & Wrecking, Excluding Remodeling; Mason Tender; Mortar Mixer - Cement or Any Other Substitute Material or Composition; Pipe Handler; Pneumatic & Electric Tool, Jackhammer, Paving Buster, Chipping Hammer, Tamper Operator, Etc.; Swing Stage Line Scaffold (Not including "Patent" Scaffolding); & Torch Person - Gas, Electric, Thermal or similar device; Scrapping, Sweeping & Clean-up; Skid Steer, Forklift (Incidental Use)

GROUP 2 - Creosote Handler; Caisson Work; Concrete Saw Drill Operator; Nozzle Operator - Gunite, Cement, Sandblasting; Pipelayer; Sheeting Setter & Driver, Heavy Building Excavation; Underground Work - Open Ditch or Excavation 8' Below Grade; Underpinning; & High Pay/Low Pay - 40 ft. Over or Under Ground Floor without Conventional Floor Areas; Pipe-Rehab Technician, including Cleaning, Cutting, Camering, etc.; & Wall Mounted Saw Operator

GROUP 3 - Driller for Blasting Purposes; Dynamite Blaster or substitute products; & Tovex TR, Water, Gas, Gel, Bristar, Silent Dynamite, etc.

LABO1097G 05/01/2002

	Rates	Fringes
POLK COUNTY (Excluding the city limits of East Grand Forks); & ST. LOUIS COUNTY (N. of TR 55, but excluding a 20-mile radius of Grand Forks, North Dakota):		
LABORERS:		
Asbestos Abatement	20.80	7.41

PAIN0061F 05/01/2002

	Rates	Fringes
CHISAGO, DAKOTA, RAMSEY & WASHINGTON COUNTIES		
PAINTERS:		
GROUP 1	26.25	9.38
GROUP 2	26.25	9.28
GROUP 3	19.69	9.28
GROUP 4	27.00	9.38

PAINTER CLASSIFICATIONS

GROUP 1: Brush; Paperhanger

GROUP 2: Drywall Finisher
GROUP 3:- Drywall Sander
GROUP 4: Sandblaster; Spray; Swing Stage; Boatswain Chair; Window Jack; Safety Belt; Erected Structural Steel; Bridges; & Application of Epoxy Materials & Materials containing over 50% Creosote

---

PAIN0106I 05/01/2001

	Rates	Fringes
ST LOUIS COUNTY		
GLAZIERS	20.11	7.24+a

FOOTNOTE:
a. 1 to 4 years' service - 1 week's paid vacation; 5 to 11 years' service - 2 weeks' paid vacation; 11 years' service or more - 3 weeks' paid vacation

---

PAIN0106J 05/01/2001

	Rates	Fringes
ST. LOUIS COUNTY:		
PAINTERS:		
REPAINT:		
Brush & Roller	21.23	7.73
Paperhanger, Spray, Steel, and Taper	21.83	7.73
New:		
Brush; Roller	22.73	7.73
Paperhanger, Spray, Steel, and Taper	23.33	7.73

PAIN0386I 05/01/2002

	Rates	Fringes
ANOKA, CARVER, HENNEPIN, ISANTI, SCOTT, SHERBURNE (South & East of a line drawn between the town of Santiago in Sherburne County and the town of Clearwater in Wright County) & WRIGHT COUNTIES:		
PAINTERS:		
Brush; Roller; & Paperhanger	25.50	10.13
Spray; Steel; Sandblaster; Swing Stage & Epoxy	26.25	10.13

PAIN0386J 05/01/2002

	Rates	Fringes
ANOKA, CARVER, HENNEPIN, ISANTI, SCOTT, SHERBURNE (South & east of a line drawn between the town of Santiago, Sherburne County and the town of Clearwater, Wright County) & WRIGHT COUNTIES:		

DRYWALL:

Finisher	24.93	10.60
Sander	18.70	10.60

PAIN0681E 05/01/2003

	Rates	Fringes
HOUSTON AND OLMSTED COUNTIES		
CORPORATE CITY LIMITS OF ROCHESTER:		
PAINTERS:		
Brush & Roller	23.73	6.89
Paperhanger & Steel	23.98	6.89
Sandblasting & Spray	24.23	6.89
Stageman & Beltman	24.73	6.89
REMAINING AREA:		
$600,000 & over in volume including Electrical & Mechanical:		
PAINTERS:		
Brush & Roller	23.73	6.89
Paperhanger & Steel	23.98	6.89
Sandblasting & Spray	24.23	6.89
Stageman & Beltman	24.73	6.89
Under $600,000 in volume including Electrical & Mechanical:		
PAINTERS:		
Brush & Roller	20.17	6.89
Paperhanger & Steel	20.38	6.89
Sandblasting & Spray	20.60	6.89
Stageman & Beltman	21.02	6.89

APPLICATION OF EPOXY, CREOSOTE OR ALL OTHER HIGHLY TOXIC MATERIALS - $ .25 PREMIUM

PAIN0681H 05/01/2003

	Rates	Fringes
HOUSTON & OLMSTED COUNTIES:		
DRYWALL FINISHERS	22.85	8.18
DRYWALL SANDERS	17.14	8.18

PAIN0880A 05/01/2002

	Rates	Fringes
SIGN PAINTERS	21.12	2.07+a+b

FOOTNOTES:

a. 8 Paid Holidays: New Year's Day; Memorial Day; Independence Day; Labor Day; Thanksgiving Day; the Day After Thanksgiving; the last working Day Before Christmas; & Christmas Day

b. Vacation Pay: 3 yrs' service - 2 wks' paid vacation; 6 yrs' service - 3 wks' paid vacation; 15 yrs' service - 4 wks' paid vacation

---

PAIN0884F 06/01/2002

	Rates	Fringes
PAINTERS:		
BENTON, SHERBURNE (Western one-half, North & West of a line drawn between the city of Santiago in Sherburne County & the city of Clearwater in Wright County) & STEARNS COUNTIES:		
Projects Under $8,000.00:		
GROUP 1	16.00	7.06
GROUP 2	16.00	7.06
GROUP 3	16.61	7.06
All Other Work:		
GROUP 1	19.31	7.71
GROUP 2	19.31	7.71
GROUP 3	20.76	7.06
CLAY & POLK COUNTIES:		
Projects Under $8,000.00:		
GROUP 1	14.41	1.87
GROUP 2	15.21	6.34
GROUP 3	15.16	1.87
All Other Work:		
GROUP 1	18.01	3.56
GROUP 2	18.31	6.99
GROUP 3	18.76	1.87

PAINTER CLASSIFICATIONS

GROUP 1: Brush & Roller

GROUP 2: Drywall Taper & Finisher

GROUP 3: Spray; Two Component Paints; Epoxies; Sandblasting & Rigging; Bridge Painting; Work done on Swing Scaffolding, Safety Harness, Boatswain's Chair, Coverings & Erection of Scaffolding for same, Work on Erected Structural Steel, Storage Bins, Tanks, Abrasive Blasting; Steeple Jack Work which applies to Smokestacks, Elevated Tanks & Erected Towers over 35 ft. & Flag Poles; & Structural Supports

---

PAIN1324E 06/01/2002

	Rates	Fringes
ANOKA, BENTON, CARVER, CHISAGO, CLAY, DAKOTA, HENNEPIN, HOUSTON, ISANTI, OLMSTED, POLK, RAMSEY, SCOTT, SHERBURNE, STEARNS, WASHINGTON & WRIGHT COUNTIES		

GLAZIERS	27.36	10.14

PLAS0265D 06/01/2000

	Rates	Fringes
ANOKA, CARVER, CHISAGO, DAKOTA, HENNEPIN, ISANTI, RAMSEY, SCOTT, SHERBURNE, WASHINGTON & WRIGHT COUNTIES:		
PLASTERERS	24.88	8.35

PLAS6330I 05/01/2002

	Rates	Fringes
ST. LOUIS COUNTY (South of T 55N)		
CEMENT MASONS (Treatment Plants)	22.79	9.30

PLAS6330J 05/01/2002

	Rates	Fringes
HOUSTON & OLMSTED COUNTIES		
CEMENT MASONS (Treatment Plants)	26.51	3.80

PLAS6330K 05/01/2002

	Rates	Fringes
ANOKA, CARVER, CHISAGO, DAKOTA, HENNEPIN, ISANTI, RAMSEY, SCOTT, SHERBURNE, WASHINGTON & WRIGHT COUNTIES		
CEMENT MASONS (Treatment Plants)	27.34	9.31

PLAS6330L 05/01/2002

	Rates	Fringes
ST. LOUIS COUNTY (North of T 55N):		
CEMENT MASONS (Treatment Plants)	21.59	8.21

PLAS6330M 05/01/2002

	Rates	Fringes
ST. LOUIS COUNTY		
PLASTERERS	23.27	9.30

PLAS6330N 06/01/2002

	Rates	Fringes
HOUSTON & OLMSTED COUNTIES		
PLASTERERS	26.85	3.35

PLAS6330O 05/01/2002

	Rates	Fringes
ST. LOUIS COUNTY (South of T 55N)		
CEMENT MASONS (Heavy, Sewer & Water Lines)	24.93	9.30

PLAS6330P 05/01/2000

	Rates	Fringes
ANOKA, CARVER, CHISAGO, DAKOTA, HENNEPIN, ISANTI, RAMSEY, SCOTT, SHERBURNE, WASHINGTON & WRIGHT COUNTIES		
CEMENT MASONS (Heavy, Sewer & Water Lines)	26.14	9.31

PLAS6330Q 05/01/2002

	Rates	Fringes
ST. LOUIS COUNTY (North of T 55N)		
CEMENT MASONS (Heavy, Sewer & Water Lines)	21.59	8.21

PLAS6330R 05/01/2002

	Rates	Fringes
HOUSTON & OLMSTED COUNTIES		
CEMENT MASONS (Heavy, Sewer & Water Lines)	26.51	3.80

PLAS6330U 05/01/2002

	Rates	Fringes
POLK COUNTY		
CEMENT MASONS (Treatment Plants)	20.79	6.96

PLAS6330W 05/01/2002

	Rates	Fringes
BENTON, CLAY & POLK COUNTIES		
PLASTERERS	19.59	5.91

PLUM0006E 08/01/2002

	Rates	Fringes
HOUSTON AND OLMSTED COUNTIES		
PIPEFITTERS, PLUMBERS, AND STEAMFITTERS	29.71	9.35

PLUM0011H 05/01/2001

	Rates	Fringes
ST. LOUIS COUNTY (South of an east-west line drawn through		

Cotton)

PLUMBERS, PIPEFITTERS, and STEAMFITTERS	26.35	9.15

PLUM0015E 05/01/2001

	Rates	Fringes
ANOKA, CARVER, HENNEPIN, ISANTI, SCOTT, SHERBURNE (East of a line running northeasterly from the point of Wright County that lies furthest north to that point of Mille Lacs County that is south by west) & WRIGHT COUNTIES:		
PLUMBERS	27.70	9.17+a

FOOTNOTE:
a. Paid Holiday: Labor Day

PLUM0015F 05/01/2001

	Rates	Fringes
BENTON & STEARNS COUNTIES		
PLUMBERS	25.80	9.71+a

FOOTNOTE:
a. Paid Holiday: Labor Day

PLUM0034E 05/01/2002

	Rates	Fringes
CHISAGO, DAKOTA, RAMSEY & WASHINGTON COUNTIES		
PLUMBERS	30.55	10.29+a

FOOTNOTE:
a. 1 Paid Holiday: Labor Day

PLUM0126E 05/15/2002

	Rates	Fringes
CLAY & POLK COUNTIES		
PLUMBERS & STEAMFITTERS:		
Mechanical Projects under $2,000,000	25.89	8.31
Mechanical Projects $2,000,000 and above	28.29	8.31

PLUM0417B 01/01/2003

	Rates	Fringes
ANOKA, DAKOTA, HENNEPIN, RAMSEY, SCOTT & WASHINGTON COUNTIES		
SPRINKLER FITTERS	30.97	11.81+a

FOOTNOTE:

a. 6 Paid Holidays: Memorial Day; July 4th; Friday before Labor Day; Labor Day; Columbus Day; & Thanksgiving Day

---

PLUM0455F 05/01/2002

	Rates	Fringes
CHISAGO, DAKOTA, RAMSEY & WASHINGTON COUNTIES		
PIPEFITTERS & STEAMFITTERS	31.22	10.64

PLUM0539G 05/01/2002

	Rates	Fringes
ANOKA, CARVER, HENNEPIN, ISANTI, SCOTT, SHERBURNE (East of a line running North-Easterly from the point of Wright Co.that lies furthest North to that point of Mille Lacs that is South by West) & WRIGHT COUNTIES:		
PIPEFITTERS	31.30	10.70

PLUM0539L 05/01/2002

	Rates	Fringes
BENTON, SHERBURNE (West of a line running North-Easterly from point of Wright Co. lies furthest North to point of Mille Lacs that is South by West) & STEARNS COUNTIES		
PIPEFITTERS	24.71	13.03

PLUM0589E 06/01/2002

	Rates	Fringes
ST. LOUIS COUNTY (North of an East-West line drawn through Cotton)		
PIPEFITTERS; PLUMBERS; & STEAMFITTERS	24.56	12.13

ROOF0096U 06/01/2002

	Rates	Fringes
ROOFERS:		
OLMSTED COUNTY	19.86	5.30
HOUSTON COUNTY	18.93	5.30

ROOF0096V 09/30/2002

	Rates	Fringes
ST. LOUIS COUNTY (South of Hwy 16, excluding city of Forbes)		
ROOFERS	24.20	8.15

ROOF0096W 05/01/2002

	Rates	Fringes
ANOKA, CARVER, CHISAGO, DAKOTA, HENNEPIN, ISANTI (South of State		

Highway #95, including Cambridge), RAMSEY, SCOTT, WASHINGTON & WRIGHT (South of County Road #39) COUNTIES

ROOFERS	27.19	8.95+a

FOOTNOTE:
a. 1 Paid Holiday: Labor Day

ROOF0096X 09/30/2002

	Rates	Fringes
BENTON, ISANTI (North of State Highway #95, excluding Cambridge), SHERBURNE, STEARNS & WRIGHT (North of Wright County Road #39, from South Haven to Monticello, including both towns) COUNTIES		
ROOFERS	23.70	6.70

ROOF0096Y 09/30/2002

	Rates	Fringes
ST. LOUIS COUNTY (Northern two-thirds)		
ROOFERS	20.40	5.70

ROOF0214B 04/01/1998

	Rates	Fringes
CLAY & POLK COUNTIES:		
ROOFERS	10.83	

SFMN0669D 04/01/2003

	Rates	Fringes
BENTON, CARVER, CHISAGO, CLAY, HOUSTON, ISANTI, OLMSTED, POLK, SHERBURNE, ST. LOUIS, STEARNS & WRIGHT COUNTIES:		
SPRINKLER FITTERS	29.06	8.10

SHEE0010U 05/01/2002

	Rates	Fringes
BENTON, SHERBURNE & STEARNS COUNTIES		
SHEET METAL WORKERS	26.07	10.53

SHEE0010V 06/01/2002

	Rates	Fringes
CLAY COUNTY		
SHEET METAL WORKERS	20.07	7.16

SHEE0010W 05/01/2000

	Rates	Fringes

ST. LOUIS COUNTY (Southern one-third):

SHEET METAL WORKERS	24.28	9.88

SHEE0010X 05/01/2001

	Rates	Fringes
ST. LOUIS COUNTY (Northern two-thirds)		
SHEET METAL WORKERS	24.83	9.57

SHEE0010Y 05/01/2001

	Rates	Fringes
ANOKA, CARVER, CHISAGO, DAKOTA, HENNEPIN, ISANTI, RAMSEY, SCOTT, WASHINGTON & WRIGHT COUNTIES		
SHEET METAL WORKERS	28.26	10.68+a

FOOTNOTE:
a. Paid Holiday: Labor Day

SHEE0010Z 05/01/2002

	Rates	Fringes
OLMSTED COUNTY		
SHEET METAL WORKERS	25.76	9.62

SHEE1000A 05/01/2002

	Rates	Fringes
HOUSTON COUNTY		
SHEET METAL WORKERS	22.27	8.28

SHEE1000E 06/01/2002

	Rates	Fringes
CLAY COUNTY		
SHEET METAL WORKERS	20.04	7.30

TEAM0132F 05/01/2000

	Rates	Fringes
CHISAGO (Northern half) & ISANTI COUNTIES:		
TRUCK DRIVERS (Treatment Plants)	23.08	

TEAM0160I 05/01/2002

	Rates	Fringes
ANOKA, CARVER, CHISAGO (S. of T. 34-N), DAKOTA, HENNEPIN, RAMSEY, SCOTT, SHERBURNE, WASHINGTON & WRIGHT COUNTIES		

TRUCK DRIVERS (Heavy, Sewer & Water Lines):

AREA 1:		
GROUP 1	21.60	6.50
GROUP 2	21.05	6.50
GROUP 3	20.95	6.50
GROUP 4	20.70	6.50
AREA 2:		
GROUP 1	21.40	6.50
GROUP 2	20.85	6.50
GROUP 3	20.75	6.50
GROUP 4	20.50	6.50
AREA 3:		
GROUP 1	19.60	6.50
GROUP 2	19.05	6.50
GROUP 3	18.95	6.50
GROUP 4	18.75	6.50
AREA 4:		
GROUP 1	17.52	6.50
GROUP 2	17.01	6.50
GROUP 3	16.86	6.50
GROUP 4	16.86	6.50

AREA DESCRIPTIONS

AREA 1 (District 1): ANOKA, CARVER, CHISAGO (S. of T. 34-N), DAKOTA, HENNEPIN, RAMSEY, SCOTT, SHERBURNE, WASHINGTON & WRIGHT COUNTIES

AREA 2 (DISTRICT 2): ST. LOUIS COUNTY

AREA 3 (District 3): HOUSTON & OLMSTED COUNTIES

AREA 4 (District 4: BENTON, CHISAGO (North of T. 34-N), CLAY, ISANTI, POLK & STEARNS COUNTIES

TRUCK DRIVER CLASSIFICATIONS

GROUP 1 - Boom; Mechanic; Off-Road, including Articulated Dump Truck; Tractor Trailer; Winch Truck

GROUP 2 - Tri Axles (Including Four Axles)

GROUP 3 - Bituminous Distributor; Bituminous Distributor (One man operation); Tandem Axles; & Single Axles

GROUP 4 - Bituminous Distributor Spray Operator (Rear and Oiler); Dumpman; Pilot Car; Self-propelled Packer; Slurry Operator; Tank Truck Tender (Gas, Oil, Road Oil & Water); Tractor Operator (Wheel type used for any purpose)

THE FOLLOWING CLASSIFICATIONS SHALL COME UNDER THE APPROPRIATE AXLE RATE WAGE GROUP:

"A" Frame; Dry Batch Hauler; Ready-Mix Concrete; Slurry;

Tank (Gas, Oil, Road Oil & Water)

TEAM0221D 06/01/2002

	Rates	Fringes
TRUCK DRIVERS (LANDSSCAPE):		
Single Axles & Farm Tractors	14.20	6.20
Tandem Axles	14.35	6.20
Truck-Train Combination	14.50	6.20

TEAM0346D 05/01/2003

	Rates	Fringes
ANOKA, CARVER, CHISAGO (Southern half), DAKOTA, HENNEPIN, RAMSEY, ST. LOUIS, SCOTT, SHERBURNE, WASHINGTON & WRIGHT COUNTIES:		
TRUCK DRIVERS (Treatment Plants):		
GROUP 1	22.65	6.75
GROUP 2	22.10	6.75
GROUP 3	22.00	6.75
GROUP 4	21.75	6.75

TRUCK DRIVER CLASSIFICATIONS
GROUP 1: Boom Truck
GROUP 2: Ready Mix, Tractor Trailor
GROUP 3: Fork Lift, Mechanic, Tandem or 3 axle Truck
GROUP 4: Dumpman, Farm Tractor, Single or 2 axle Truck

TEAM0405C 05/01/1999

	Rates	Fringes
HOUSTON COUNTY		
TRUCK DRIVERS (Treatment Plants)	15.49	
OLMSTED COUNTY		
TRUCK DRIVERS (Treatment Plants)	16.94	

TEAM0563C 05/01/1999

	Rates	Fringes
BENTON, CLAY (Except City limits of Moorhead) & STEARNS COUNTIES:		
TRUCK DRIVERS (Treatment Plants):		
Total Construction Projects of Over $950,000.00	15.59	
Total Construction Projects Under $950,000.00	13.84	

TEAM0580C 04/19/1999

	Rates	Fringes
CLAY (Moorhead) & POLK (East Grand Forks) COUNTIES:		
TRUCK DRIVERS (Treatment Plants)	14.05	

TEAM1097B 05/01/2001

	Rates	Fringes

POLK COUNTY (Excluding the city limits of East Grand Forks):

TRUCK DRIVERS (Treatment Plants):

Under $760,000, including Electrical & Mechanical	13.48
$760,000 & Over, including Electrical & Mechanical	15.68

WELDERS - Receive rate prescribed for craft performing operation to which welding is incidental.

==========

Unlisted classifications needed for work not included within the scope of the classifications listed may be added after award only as provided in the labor standards contract clauses (29 CFR 5.5(a)(1)(ii)).

In the listing above, the "SU" designation means that rates listed under that identifier do not reflect collectively bargained wage and fringe benefit rates. Other designations indicate unions whose rates have been determined to be prevailing.

WAGE DETERMINATION APPEALS PROCESS

1.) Has there been an initial decision in the matter? This can be:

* an existing published wage determination
* a survey underlying a wage determination
* a Wage and Hour Division letter setting forth a position on a wage determination matter
* a conformance (additional classification and rate) ruling

On survey related matters, initial contact, including requests for summaries of surveys, should be with the Wage and Hour Regional Office for the area in which the survey was conducted because those Regional Offices have responsibility for the Davis-Bacon survey program. If the response from this initial contact is not satisfactory, then the process described in 2.) and 3.) should be followed.

With regard to any other matter not yet ripe for the formal process described here, initial contact should be with the Branch of Construction Wage Determinations. Write to:

Branch of Construction Wage Determinations
Wage and Hour Division
U. S. Department of Labor
200 Constitution Avenue, N. W.
Washington, D. C. 20210

2.) If the answer to the question in 1.) is yes, then an interested party (those affected by the action) can request

review and reconsideration from the Wage and Hour Administrator (See 29 CFR Part 1.8 and 29 CFR Part 7). Write to:

Wage and Hour Administrator
U.S. Department of Labor
200 Constitution Avenue, N. W.
Washington, D. C. 20210

The request should be accompanied by a full statement of the interested party's position and by any information (wage payment data, project description, area practice material, etc.) that the requestor considers relevant to the issue.

3.) If the decision of the Administrator is not favorable, an interested party may appeal directly to the Administrative Review Board (formerly the Wage Appeals Board). Write to:

Administrative Review Board
U. S. Department of Labor
200 Constitution Avenue, N. W.
Washington, D. C. 20210

4.) All decisions by the Administrative Review Board are final.

END OF GENERAL DECISION

MN030061-36

A B C D E F G H I
J K L M N O P Q R
S T U V W X Y Z
a b c d e f g h i j k l m
n o p q r s t u v w x y z
1 2 3 4 5 6 7 8 9 10

A B C D E F G H I J K L M
N O P Q R S T U V W X Y Z
a b c d e f g h i j k l m
n o p q r s t u v w x y z
1 2 3 4 5 6 7 8 9 10

Note: Above lettering styles are Helios Extra Bold Condensed and Helios Bold II. Helvetica Black Roman and Helvetica Bold Roman are acceptable substitutes.

STANDARD
ALPHABET & NUMERALS

OFFICE OF THE DISTRICT ENGINEER
OMAHA, NEBRASKA
REV. NOVEMBER, 1982

00800AT1

OD15-9A12

This page was intentionally left blank for duplex printing.

NOTES:

1. Posts to be S4S.
2. Plywood shall be exterior type, A-C grade.
3. Before painting, surface to be clean, dry, free from grease and sanded.
4. Paint with one prime coat zinc oxide and two finish coats of Color Number 20122 in Fed. Std. 595A, brown gloss exterior type enamel, conforming to Fed. Specs. TT-E-489.
5. All lettering to be Color Number 27875 in Fed. Std. 595A, white gloss, exterior type enamel.
6. Decalcomania for Corps of Engineers Insignia and HQ USAF Engineering and Services Directorate Emblem will be furnished by the Contracting Officer for installation by the Contractor.
7. All exposed wood (posts, supports, back, etc.) shall be painted the same background color as the sign.

SCHEDULE

SPACE	HEIGHT	LINE	DESCRIPTION	LETTER HEIGHT	STROKE
A	5"	1	U.S. AIR FORCE PROJECT	1.5"	3/16"
B	1"	2	IN PARTNERSHIP WITH	1.5"	3/16"
C	1"	3	U.S. ARMY CORPS OF ENGINEERS	1.5"	3/16"
D	5"	4	PROJECT NAME	4"	1/2"
E	3"	5	PROJECT NAME CONT'D (IF REQ.)	4"	1/2"
F	5"	6	GENERAL CONTRACTOR/A-E	1.5"	3/16"
G	1"	7	GENERAL CONTRACTOR/A-E	1.5"	3/16"
H	4"	8	PLANNED COMPLETION DATE	2.5"	1/4"
I	5"				

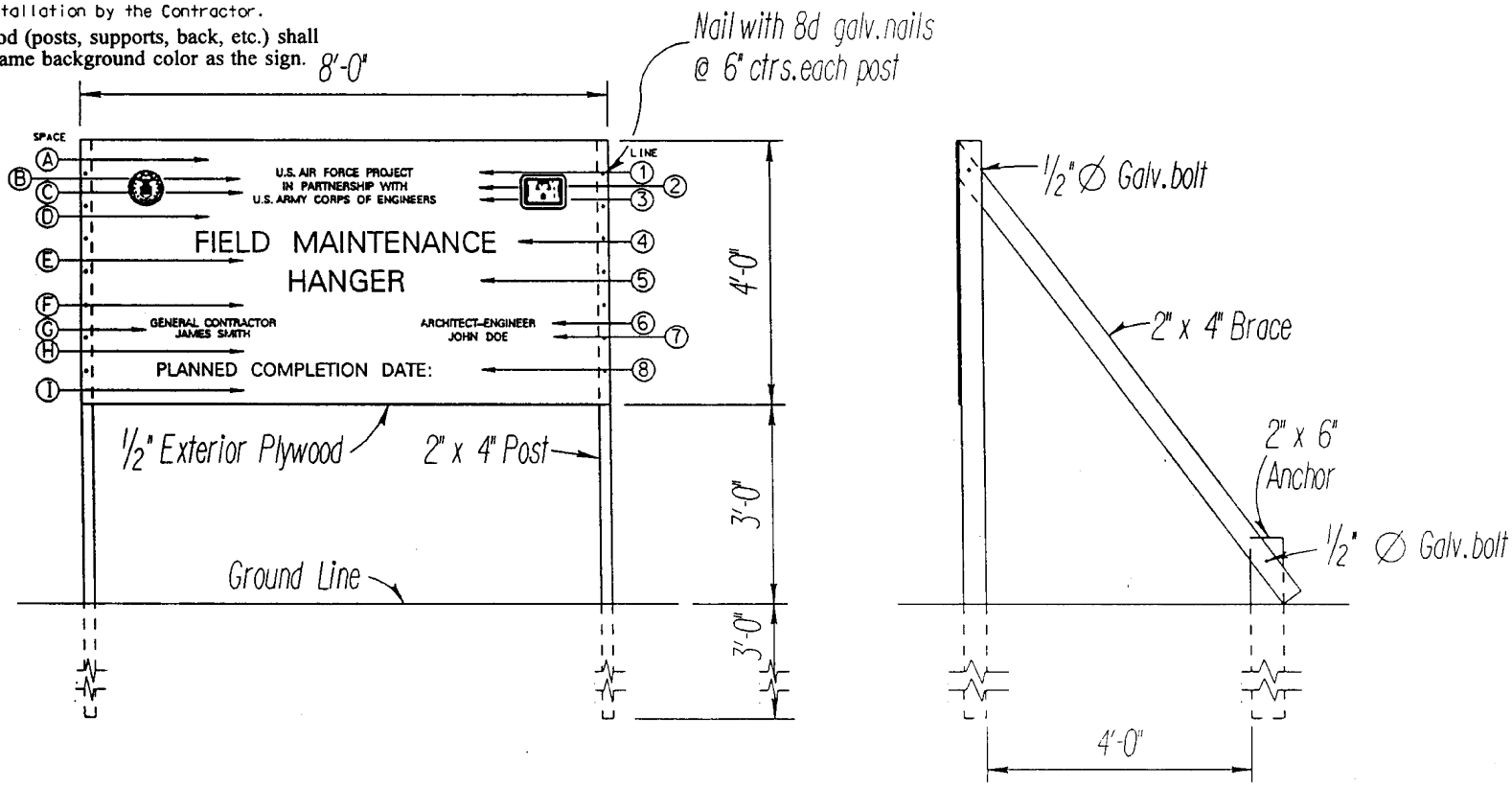

FRONT VIEW

END VIEW

STANDARD
PROJECT SIGN
U.S. AIR FORCE MCP PROJECTS
OFFICE OF THE DISTRICT ENGINEER
OMAHA, NE
REV. OCTOBER 1993

00800AT2

OD15-9A22

This page was intentionally left blank for duplex printing.

SECTION TABLE OF CONTENTS

DIVISION 01 - GENERAL REQUIREMENTS

SECTION 01030

BID OPTIONS

1/00

PART 1 GENERAL

1.1 DESCRIPTION OF BID OPTIONS
1.1.1 Bid Option O-1
1.1.2 Bid Option O-2
1.1.3 Bid Option O-3
1.1.4 Bid Option O-4

PART 2 PRODUCTS (Not Applicable)

PART 3 EXECUTION (Not Applicable)

-- End of Section Table of Contents --

SECTION 01030

BID OPTIONS
1/00

PART 1 GENERAL

1.1 DESCRIPTION OF BID OPTIONS

1.1.1 Bid Option O-1

Asbestos abatement work associated with existing Buildings 711 and 715 on the Air Force Reserve Base. Refer to Drawing A0.2 for building locations and specifications for detailed scope of work.

1.1.2 Bid Option O-2

Complete building demolition of Buildings 711 and 715 on the Air Force Reserve Base Base, including utility and site work required to provide a clean site ready for future use. Extent of work under this Bid Option includes building demolition, excavation of all below grade structures, utility disconnection and cut-offs, provision of compacted fill for the excavation and seeding of topsoil at finished grade. Refer to Drawing A1.4 for additional information.

1.1.3 Bid Option O-3

Sitework associated with the Northwest Parking Lot. Extent of area to be included shall be as delineated on Drawing C5.4. Scope of work under this Bid Option includes includes selective demolition, clearing and grubbing, grading, subgrade preparation,curb & gutter, aggregate base course, bituminous paving, and striping.

1.1.4 Bid Option O-4

Landscaping associated with the Northwest Courtyard, northern edge of the site from the west edge to the parking lot entry and the area around the new parking lot. Extent of area to be included shall be as delineated on Drawing L1.1. Scope of work under this Bid Option includes includes finish grading, sodding (in lieu of seeding specified under the Basic Bid),landscaping and the site irrigation system related to this work.

PART 2 PRODUCTS (Not Applicable)

PART 3 EXECUTION (Not Applicable)

-- End of Section --

SECTION TABLE OF CONTENTS

DIVISION 01 - GENERAL REQUIREMENTS

SECTION 01040

AS-BUILT DRAWINGS

10/02; Rev 01/03

PART 1 GENERAL

1.1 DEFINITIONS
1.1.1 Red-Line Drawings
1.1.2 As-Built Drawings
1.1.3 Vellum Drawings
1.1.4 Black-Line Drawings
1.1.5 Full-Size Drawings
1.1.6 Half-Size Drawings
1.1.7 Modification Circle
1.1.8 Mylar Drawings
1.1.9 Electronic CADD Files
1.2 GENERAL REQUIREMENTS
1.3 PAYMENT
1.4 TRANSMITTAL OF AS-BUILT DRAWINGS
1.4.1 Preliminary As-Built Drawings
1.4.2 Final As-Built Drawings
1.4.3 As-Built Preparation
1.4.3.1 Not Used
1.4.3.2 For AutoCADD (*DWG) Files
1.5 PROCEDURE
1.6 TITLE BLOCKS
1.7 PROCEDURES FOR POSTING MODIFICATION CHANGES TO DRAWINGS
1.8 WORD ABBREVIATIONS
1.9 LEGEND SHEETS
1.10 CONTRACTOR SHOP DRAWINGS
1.11 INDEXING OF DRAWINGS

PART 2 PRODUCTS (NOT APPLICABLE)

PART 3 EXECUTION

3.1 GENERAL
3.2 SITE WORK
3.2.1 Utilities
3.2.2 Structures
3.2.3 Grades
3.3 STRUCTURAL
3.3.1 Steel
3.4 MECHANICAL
3.4.1 Ductwork
3.4.2 Plumbing
3.5 ELECTRICAL
3.5.1 PANELS
3.5.2 Controls

-- End of Section Table of Contents --

SECTION 01040

AS-BUILT DRAWINGS
10/02; Rev 01/03

PART 1 GENERAL

1.1 DEFINITIONS

The definitions listed below form a part of this specification.

1.1.1 Red-Line Drawings

Contract drawings marked-up to show actual work performed to include necessary sketches, modification drawings, shop drawings and notes. Green ink is used to indicate work deleted from the contract. Red ink is used for additions and deviations from the contract.

1.1.2 As-Built Drawings

Professional finished vellum drawings and electronic CADD files developed from the original contract drawings that include all of the information from the redline drawings and suitable for half-size reproduction.

1.1.3 Vellum Drawings

Drawings on erasable Vellum 20# similar or equal to Xerox Zero solvent vellum.

1.1.4 Black-Line Drawings

Paper drawings reproduced from electronic CADD files or high quality reproducible drawings.

1.1.5 Full-Size Drawings

28 inches x 40 inches nominal size drawings with all details visually readable.

1.1.6 Half-Size Drawings

14 inches x 20 inches nominal size drawings with all details visually readable.

1.1.7 Modification Circle

A circle with a horizontal line through the center. The top half will contain the letter "P" with the bottom half containing the Modification number. The lettering standard will be 120/6 WRICO or similar.

1.1.8 Mylar Drawings

Drawings on polyester film, 3 or 5 mil, similar or equal to K & E Stabilene.

1.1.9 Electronic CADD Files

Electronic CADD files are files saved on CD-ROM in accordance with appropriate CADD standard. The CADD standard will include level on/off status, special characters, line wieghts, font, and size requirements.

1.2 GENERAL REQUIREMENTS

The work includes creation of vellumdrawings and electronic CADD files on AutoCADD (version 14) for as-built drawings to accurately depict existing conditions of the project. As-Built Drawings will become the permanent record drawings of the construction. The Contractor is responsible for development of electronic CADD files in accordance with Omaha DistrictCADD standards Omaha District AutoCADD Standards will be made available to the successful bidder. AutoCADD Standard utilize the National CAD standards with Omaha District refinements concerning file names, layers, colors, line widths, details and symbols. See requirements in this section for a summary of Omaha District file format and font requirements. The Contractor shall be responsible for furnishing the required CAD software. The Omaha District will furnish a CD of CAD (read-write) contract drawing files in the software language specified in paragraph Procedure below. This is the software language required by the Using Service. These drawing files shall be used to prepare required As-Built drawings. The As-Built drawings shall include all major features of the work and all details to the same level as the original contract set of drawings. All changes from the contract drawings, including but not limited to all deviations, additional information, and modifications to the contract. Where contract drawings or specifications allow for options, only the option selected and actually constructed shall be shown on the As-Built Drawings. Systems designed or enhanced by the Contractor such as HVAC control system, fire alarm system fire sprinkler system, irrigation sprinkler system, letters of clarification, shall be accurately and neatly recorded on the As-Built Drawings using the same symbols, terminology, and general quality as the original set of contract drawings. All sheets affected by a change shall be revised. The transmittal requirements for the As-built Drawings shall be shown as events on the Contractor prepared project schedule.

1.3 PAYMENT

In accordance with the clause "Payment Under Fixed - Price Construction Contracts", which provides for progress payments on estimates of work accomplished (which meets the standards of quality established under the contract), $22,500 will be withheld from payment for the creation of As-Built drawings until the final as-built drawings are delivered to the Contracting Officer (including any necessary revisions and subject to the approval of the Contracting Officer).

The Government will assign the Contractor a performance rating (CCASS for Corps of Engineers projects) upon completion of the project. The timeliness of satisfactory As-Built drawing submittals will be an important factor in determining the assigned rating. An unsatisfactory performance of As-Built drawings creation will be given to the Contractor if the Contractor demonstrates an unwillingness to work with the Government on As-Built drawing creation or the Contractor fails to submit satisfactory Final As-Built drawings within 60 calendar days of turning the completed project over to the Using Service.

1.4 TRANSMITTAL OF AS-BUILT DRAWINGS

1.4.1 Preliminary As-Built Drawings

The Contractor shall produce Preliminary As-Built Drawings indicating as-built conditions on AutoCADD (Version 14.0) with "clouding".The Contractor shall contact Jim Janicek at (402)221-4519 before beginning As-Built preparation. As-Built preparation process is provided in paragraph As-Built Preparation below. Preliminary drawings shall consist of 15 percent of total project drawings. These drawings shall be sheets used for the construction of this project (exludes Cover Sheet, Vicinity Map, Location Plan and Indexes). The As-Built CADD files which include all changes up to the time Preliminary Drawings shall be sent as stated below. The Contractor shall draw attention to all drawing changes by "clouding" the affected area. This "clouding" shall be accomplished on layer 63 of the drawing file. The Preliminary Drawings shall consist of one (1) set of CADD files on a CD-ROM and one (1) full-size set of the Black-Line Drawings. One (1) set of CADD files on a CD-ROM shall be submitted to the Omaha District Office (ATTN: CENWO-ED-DI, Jim Janicek). One (1) full-size set of the Black-Line Drawings shall be submitted to the COR. Both documents shall be submitted three (3)weeks prior to the final acceptance inspection unless otherwise directed by the COR. The COR will notify the Contractor in writing of approval / disapproval. The Contractor shall not submit the Final Drawings until he receives the COR's letter approving the Preliminary Drawings.

1.4.2 Final As-Built Drawings

The Contractor shall produce Final As-Built Drawings on AutoCADD (Version 14.0) without "clouding". As-Built preparpation process is provided in paragraph As-Built Preparation below. The Final Drawings shall include all changes. The Final Drawings in the form of a CD-ROM shall be submitted to the COR and Omaha District Office (CENWO-ED-DI) no earlier than the day of acceptance of the project and no later than thirty (30) days after the date on the acceptance letter for the Preliminary Drawing unless otherwise directed by the COR. (Note: Final drawings shall not be forwarded to the customer. Corps of Engineers, Omaha District COR will forward to the customer after Quality Review.) Contractor shall submit one (1) set of CADD files on a CD-ROM to the Omaha District Office (ATTN: CENWO-ED-DI, Jim Janicek). Contractor shall send the following documents to the COR:

a) One (1) set of CADD files on CD-ROM (folder name containing as-built files shall be designated "AS-BUILTS" on each CD-ROM). Both CD case and CD-ROM shall contain the name of the project, location, specification number, and contract number, and words "As-Built Record Set"). The folder shall contain drawings, indexes and X-REF files related to all as-builts.

b) One (1) full-size set of vellumAs-Built Drawings, along with all red-lined hard copy drawings prepared by the Contractor during construction.

COR will forward one (1) full-size set of drawings along with CD-ROM to the customer.

1.4.3 As-Built Preparation

Both preliminary and final electronic as-built drawings shall be produced in accordance with the following process for MicroStation drawings:

1.4.3.1 Not Used
1.4.3.2 For AutoCADD (*DWG) Files

a. When opened, the drawing shall be seen exactly as it should be

plotted.
b. The view shall be zoomed to fit the border.
c. All information in the title block shall filled in, including plot scale.
d. The information in the title block shall be correct, including the design file name and the plot scale.
e. All files shall reference an AutoCAD border supplied by the Omaha District.
f. All unnecessary information outside the border shall be deleted.
g. All files shall be purged.
h. All xrefs shall be included.
i. All fonts used shall be included with the set, even if it is the standard AutoCAD fonts.
j. An ASCII text file shall be provided with the following information: the name and phone number of the person we need to contact if we have problems, and the version of AutoCAD used to create and/or work on the drawings.
k. Both the .ctb file and the .pc3 file shall be supplied.
l. Each sheet/design shall have its own file and file name.
m. All proxy graphics shall be exploded to allow editing with AutoCAD without the use of Autodesk desktop software.

1.5 PROCEDURE

One (1) CD-ROM containing the contract drawings (read-write CADD files) and CADD standards in AutoCADD (Version 14.0) format, for use in the preparation of As-Built Drawings by the Contractor, will be forwarded to the Resident Engineer. This CD-ROM will then be furnished to the Contractor after signed receipt to the Resident Engineer. The Contractor shall create a set of electronic Cadd files and full-size Red-Line Drawings to fully indicate As-Built conditions. The Red-Line Drawings shall be maintained at the site, in a current condition until the completion of the work and shall be available for review by the COR at all times. All as-built conditions shall be on the Red-Line Drawings within two (2) days after the work activity is completed or shall be entered on the deficiency tracking system (see Section 01451A, CONTRACTOR QUALITY CONTROL). The Contractor shall not convert electronic drawing files from one software language to another (i.e. Microstation to AutoCADD or AutoCADD to Microstation).

1.6 TITLE BLOCKS

The contract number and the specification number (if available) shall be shown on all sheets. "RECORD DRAWING" shall be added below the title block on all sheets. All modifications to the contract shall be posted in ascending order. The top line of the revision box shall state "REVISED TO SHOW AS-BUILT CONDITIONS" and dated. All modifications to all plans, sections, or details, shall have a modification number placed in the revision box under column entitled "Symbol". The statement "GENERAL REVISIONS" may be used when applicable. The date to be added in the revision box for modifications is found in Block 3 of Form SF-30. Cover Sheet will have Contract Award Set changed to As-Built Record Set with month & year completed. Month and year completed will also go in the date box in the title block. There will be no separate dates.

1.7 PROCEDURES FOR POSTING MODIFICATION CHANGES TO DRAWINGS

Follow directions in the modification for posting descriptive changes.
A Modification Circle shall be place at the location of each deletion.
The highest modification number on the sheet should be shown in the modification circle in the "DATE" and "DRAWING CODE" boxes of the title block.
For all new details or sections that are added to a drawing, place a Modification Circle by the detail or section title.

For changes to a drawing, place a Modification Circle by the title of the affected plan, section or detail titles (each location).
For changes to schedules on drawings, a Modification Circle shall be placed either by the schedule heading or by the change in the schedule.
The Modification Circle size shall be 1/2-inch diameter unless the area where circle is to be placed is crowded. Use smaller size circle for crowded areas.

1.8 WORD ABBREVIATIONS

Abbreviations shown on the abbreviation sheet shall be used to describe all work items. Additional word abbreviations, not found on the abbreviation sheet but necessary to describe the work, shall be properly identified and incorporated with the other standard word abbreviations.

1.9 LEGEND SHEETS

Symbols, which conflict with those on the original contract legend sheet, shall not be used. Additional symbols, necessary to depict any additional work items, shall be properly identified and added to the legend sheet or supplemental legend. Those projects that do not have legend sheets may use supplemental legends on each sheet where symbol is shown.

1.10 CONTRACTOR SHOP DRAWINGS

Contractor shop drawings,which supersede data on the contract plans and/or additional drawings, prepared by the Contractor, shall be incorporated into the As-Built Drawings. Design plans prepared by Contractor shall include the designer's name on the As-Built Drawings.

1.11 INDEXING OF DRAWINGS

If drawings are added to the portfolio of drawings to depict as-built conditions, the index of drawings shall be revised accordingly.

PART 2 PRODUCTS (NOT APPLICABLE)

PART 3 EXECUTION

3.1 GENERAL

As-Built drawings shall include as-built information to the same level of detail as shown on the original details, unless otherwise specified. The Contractor shall provide any additional full-size drawings as required to display all the details.

3.2 SITE WORK

3.2.1 Utilities

All utilities shall be shown whether active, inactive, shown on the original contract drawings, or found on-site. The type of utility, location, general direction, size, material make-up and depth shall be shown. The location and description of any utility line or other installations of any kind known to exist within the construction area shall be shown. The location shall include dimensions to permanent features.

3.2.2 Structures

Structures above and below ground shall be shown. The size, material make-up, location, height, and/or depth shall be shown. Manholes shall show rim elevation and invert elevations as applicable. Power poles shall show electrical equipment and voltage rating.

3.2.3 Grades

Grade or alignment of roads, structures, or utilities shall be corrected if any changes were made from the contract drawings. Elevations shall be corrected if changes were made in site grading.

3.3 STRUCTURAL

3.3.1 Steel

Shop drawings that deviate from the contract drawings shall be incorporated in the As-Built Drawings.

3.4 MECHANICAL

3.4.1 Ductwork

Ductwork shall be shown to reflect actual installation and duct size. Ductwork routing changes shall be shown.

3.4.2 Plumbing

Piping and fixtures shall be shown to reflect the type of material, size and the route or location.

3.5 ELECTRICAL

3.5.1 PANELS

All contract drawing panel schedules shall be revised to show as-built conditions. Home-run circuit designation on electrical drawings shall accurately correspond to the as-built panel schedules.

3.5.2 Controls

All control diagrams in contract drawings shall be revised to reflect as-built conditions, and setpoints.

-- End of Section --

SECTION TABLE OF CONTENTS

DIVISION 01 - GENERAL REQUIREMENTS

SECTION 01090

SOURCES FOR REFERENCE PUBLICATIONS

3/99

PART 1 GENERAL

1.1 REFERENCES
1.2 ORDERING INFORMATION

-- End of Section Table of Contents --

SECTION 01090

SOURCES FOR REFERENCE PUBLICATIONS
3/99

PART 1 GENERAL

1.1 REFERENCES

Various publications are referenced in other sections of the specifications to establish requirements for the work. These references are identified in each section by document number, date and title. The document number used in the citation is the number assigned by the sponsoring organization, e.g. UL 1 (1993; Rev thru Jan 1995) Flexible Metal Conduit. However, when the sponsoring organization has not assigned a number to a document, an identifying number has been assigned for convenience, e.g. UL's unnumbered 1995 edition of their Building Materials Directory is identified as UL-01 (1995) Building Materials Directory. The sponsoring organization number (UL 1) can be distinguished from an assigned identifying number (UL-01) by the lack of a dash mark (-) in the sponsoring organization assigned number.

1.2 ORDERING INFORMATION

The addresses of the organizations whose publications are referenced in other sections of these specifications are listed below, and if the source of the publications is different from the address of the sponsoring organization, that information is also provided. Documents listed in the specifications with numbers which were not assigned by the sponsoring organization should be ordered from the source by title rather than by number.

ACI INTERNATIONAL (ACI)

P.O. Box 9094
Farmington Hills, MI 48333-9094
Ph: 248-848-3800
Fax: 248-848-3801
Internet: http://www.aci-int.org

AGRICULTURAL MARKETING SERVICE (AMS)

Seed Regulatory and Testing Branch
USDA, AMS, LS Div.
Room 209, Bldg. 306, BARC-East
Beltsville, MD 20705-2325
Ph: 301-504-9430
Fax: 301-504-5454 Internet: http://www.ams.usda.gov/lsg/ls-sd.htm
e-mail: james_p_triplitt@usda.gov

AIR CONDITIONING AND REFRIGERATION INSTITUTE (ARI)

4301 North Fairfax Dr., Suite 425
ATTN: Pubs Dept.
Arlington, VA 22203
Ph: 703-524-8800
Fax: 703-528-3816

E-mail: ari@ari.org
Internet: www.ari.org

AIR CONDITIONING CONTRACTORS OF AMERICA (ACCA)

1712 New Hampshire Avenue, NW
Washington, DC 20009
Ph: 202-483-9370
FAX: 202-234-4721

AIR DIFFUSION COUNCIL (ADC)

104 So. Michigan Ave., No. 1500
Chicago, IL 60603
Ph: 312-201-0101
Fax: 312-201-0214

AIR MOVEMENT AND CONTROL ASSOCIATION (AMCA)

30 W. University Dr.
Arlington Heights, IL 60004-1893
Ph: 708-394-0404
Fax: 708-253-0088

ALUMINUM ASSOCIATION (AA)

Pubs Department
P.O. Box 753
Waldorf, MD 20601
Ph: 301-645-0756
Fax: 301-843-0159
Internet: www.aluminum.org

AMERICAN ARCHITECTURAL MANUFACTURERS ASSOCIATION (AAMA)

1827 Walden Ofc. Sq.
Suite 104
Schaumburg, IL 60173-4268
Ph: 847-303-5664
Fax: 847-303-5774
Internet: www.aamanet.org

AMERICAN ASSOCIATION OF STATE HIGHWAY AND TRANSPORTATION OFFICIALS (AASHTO)

444 N. Capital St., NW, Suite 249
Washington, DC 20001
Ph: 800-231-3475
Fax: 800-525-5562
Internet: www.aashto.org
NOTE: AASHTO documents with numbers beginning with M or T are available only in Standard Specifications for Transportation Materials and Methods of Samplingand Testing, 1998 @$289.00\X

AMERICAN ASSOCIATION OF TEXTILE CHEMISTS AND COLORISTS (AATCC)

P.O. Box 12215
1 Davis Drive

Research Triangle Park, NC 27709-2215
Ph: 919-549-8141
Fax: 919-549-8933

AMERICAN BEARING MANUFACTURERS ASSOCIATION (ABEMA)

1200 19th Street, NW, Suite 300
Washington, DC 20036-4303
Ph: 202-429-5155
Fax: 202-223-4579

AMERICAN BOILER MANUFACTURERS ASSOCIATION (ABMA)

950 N. Glebe Rd., Suite 160
Arlington, VA 22203-1824
Ph: 703-522-7350
Fax: 703-522-2665

AMERICAN CONCRETE PIPE ASSOCIATION (ACPA)

222 West Las Colinas Blvd., Suite 641
Irving, TX 75039-5423
Ph: 972-506-7616
Fax: 972-506-7682
Internet: http://www.concrete-pipe.org
e-mail: info@concrete-pipe.org

AMERICAN CONFERENCE OF GOVERNMENTAL INDUSTRIAL HYGIENISTS (ACGIH)

1330 Kemper Meadow Dr.
Cincinnati, OH 45240-1634
Ph: 513-742-2020
Fax: 513-742-3355
Internet: www.acgih.org
E-mail: pubs@acgih.org

AMERICAN FOREST & PAPER ASSOCIATION (AF&PA)

American Wood Council
ATTN: Publications Dept.
1111 Nineteenth St. NW, Suite 800
Washington, DC 20036
Ph: 800-294-2372
Fax: 202-463-2791
Internet: http://www.afandpa.org
Order From: American Wood Council
P.O. Box 5364
Madison, WI 53705-5364
Ph: 800-890-7732
Fax: 608-231-2152

AMERICAN GAS ASSOCIATION (AGA)

Order from: AGA Distribution Center
P.O. Box 79230
Baltimore, MD 21279-0230
Ph: 301-617-7819
Fax: 301-206-9789

AMERICAN GEAR MANUFACTURERS ASSOCIATION (AGMA)

1500 King St., Suite 201
Alexandria, VA 22314-2730
Ph: 703-684-0211
Fax: 703-684-0242
Order From:
Global Engineering Documents
15 Inverness Lane East
Englewood, CO 80112
Ph: 800-854-7179
Fax: 303-397-2740

AMERICAN HARDBOARD ASSOCIATION (AHA)

1210 W. Northwest Highway
Palatine, IL 60067
Ph: 847-934-8800
Fax: 847-934-8803

AMERICAN INDUSTRIAL HYGIENE ASSOCIATION (AIHA)

2700 Prosperity Ave., Suite 250
Fairfax, VA 22031
Ph: 703-849-8888
Fax: 703-207-3561
Internet: http://www.aiha.org
E-mail: www.aiscweb.com

AMERICAN INSTITUTE OF STEEL CONSTRUCTION (AISC)

One East Wacker Dr., Suite 3100
Chicago, IL 60601-2001
Ph: 312-670-2400
Publications: 800-644-2400
Fax: 312-670-2400
Internet: http://www.aiscweb.com

AMERICAN INSTITUTE OF TIMBER CONSTRUCTION (AITC)

7012 So. Revere Parkway, Suite 140
Englewood, CO 80112
Ph: 303-792-9559
Fax: 303-792-0669

AMERICAN IRON AND STEEL INSTITUTE (AISI)

ATTN: Publication Orders
P.O. Box 4321
Chestertown, MD 21690
Ph: 800-277-3850
Fax: 410-810-0910

AMERICAN NATIONAL STANDARDS INSTITUTE (ANSI)

11 West 42nd St
New York, NY 10036
Ph: 212-642-4900
Fax: 212-398-0023

Internet: www.ansi.org/
Note: Documents beginning with the letter "S" can be ordered from:
Acoustical Society of America
P. O. Box 1020
Sweickley, PA 15143-9998
Ph: 412-741-1979
Fax: 412-741-0609
Internet: www.aip.org

AMERICAN NURSERY AND LANDSCAPE ASSOCIATION (ANLA)

1250 I St., NW, Suite 500
Washington, DC 20005
Ph: 202-789-2900 Ext 3010
FAX: 202-789-1893

AMERICAN PETROLEUM INSTITUTE (API)

1220 L St., NW
Washington, DC 20005
Ph: 202-682-8375
Fax: 202-962-4776
Internet: http://www.api.org

AMERICAN RAILWAY ENGINEERING & MAINTENANCE-OF-WAY ASSOCIATION (AREMA)

8201 Corporate Dr., Suite 1125
Landover, MD 20785
Ph: 301-459-3200
Fax: 301-459-8077

AMERICAN SOCIETY FOR NONDESTRUCTIVE TESTING (ASNT)

1711 Arlingate Lane
P.O. Box 28518
Columbus, OH 43228-0518
Ph: 800-222-2768
Fax: 614-274-6899

AMERICAN SOCIETY FOR TESTING AND MATERIALS (ASTM)

100 Barr Harbor Drive
West Conshohocken, PA 19428-2959
Ph: 610-832-9500
Fax: 610-832-9555
Internet: www.astm.org
NOTE: The annual ASTM Book of Standards (66 Vol) is available for $3500.00. Prices of individual standards vary.

AMERICAN SOCIETY OF CIVIL ENGINEERS (ASCE)

1801 Alexander Bell Drive
Reston, VA 20190-4400
Ph: 800-548-2723
Fax: 703-295-6333
Internet: www.pubs.asce.org
e-mail: marketing@asce.org

AMERICAN SOCIETY OF HEATING, REFRIGERATING AND AIR-CONDITIONING ENGINEERS (ASHRAE)

1791 Tullie Cir., NE
Atlanta, GA 30329-2305
Ph: 800-527-4723 or 404-636-8400
Fax: 404-321-5478
Internet: http://www.ashrae.org

AMERICAN SOCIETY OF SANITARY ENGINEERING FOR PLUMBING AND SANITARY RESEARCH (ASSE)

P.O. Box 40362
Bay Village, OH 44140
Ph: 216-835-3040
Fax: 216-835-3488
E-mail: asse@ix.netcom.com

AMERICAN WATER WORKS ASSOCIATION(AWWA)

6666 West Quincy
Denver, CO 80235
Ph: 800-926-7337
Fax: 303-795-1989
Internet: www.awwa.org

AMERICAN WELDING SOCIETY (AWS)

550 N.W. LeJeune Road
Miami, FL 33126
Ph: 305-443-9353
Fax: 305-443-7559
Internet: http://www.amweld.org

AMERICAN WOOD-PRESERVERS' ASSOCIATION (AWPA)

3246 Fall Creek Highway, Suite 1900
Grandbury, TX 76049-7979
Ph: 817-326-6300
Fax: 817-326-6306
NOTE: AWPA Book of Standards is published yearly @$75.00; individual standards may be ordered separately for $12.00 to $28.00 each.

APA - THE ENGINEERED WOOD ASSOCIATION (APA)

2130 Barrett Park Dr., Suite 102
Kennesaw, GA 30144-3681
Ph: 770-427-9371
Fax: 770-423-1703
Internet: www.apawood.org
Note: Prices are available only by calling APA

ARCHITECTURAL WOODWORK INSTITUTE (AWI)

1952 Isaac Newton Square
Reston, VA 20190
Ph: 703-733-0600
Fax: 703-733-0584

Internet: www.awinet.org

ASBESTOS CEMENT PIPE PRODUCERS ASSOCIATION (ACPPA)

1745 Jefferson Davis Highway, Suite 406
Arlington, VA 22202
Ph: 703-412-1153
Fax: 703-412-1152

ASME INTERNATIONAL (ASME)

Three Park Avenue
New York, NY 10016-5990
Ph: 212-591-7000
Fax: 212-591-7674
Internet: www.asme.org

ASPHALT INSTITUTE (AI)

Research Park Dr.
P.O. Box 14052
Lexington, KY 40512-4052
Ph: 606-288-4960
Fax: 606-288-4999
Internet: www.asphaltinstitute.org
e-mail: asphalti@asphaltinstitute.org

ASSOCIATED AIR BALANCE COUNCIL (AABC)

1518 K St., NW, Suite 503
Washington, DC 20005
Ph: 202-737-0202
Fax: 202-638-4833

ASSOCIATION FOR THE ADVANCEMENT OF MEDICAL INSTRUMENTATION (AAMI)

3330 Washington Blvd., Suite 400
Arlington, VA 22201-4598
Ph: 703-525-4890
Fax: 703-276-0793
Internet: www.aami.org

ASSOCIATION OF EDISON ILLUMINATING COMPANIES (AEIC)

600 No. 18th St.
P.O. Box 2641
Birmingham, AL 35291-0992
Ph: 205-257-2530
Fax: 205-257-2540
Internet: http://www.aeic.org/index.htm
E-Mail: veazey-white@apc.com

ASSOCIATION OF HOME APPLIANCE MANUFACTURERS (AHAM)

20 No. Wacker Dr., Suite 1500
Chicago, IL 60606
Ph: 312-984-5800
Fax: 312-984-5823
Internet: http://www.aham.org

ASSOCIATION OF IRON AND STEEL ENGINEERS (AISE)

Three Gateway Center, Suite 2350
Pittsburg, PA 15222
Ph: 412-281-6323

BIFMA INTERNATIONAL (BIFMA)

2680 Horizon Drive SE, Suite A-1
Grand Rapids, MI 49546-7500
Ph: 616-285-3963
Fax: 616-285-3765
Internet: www.bifma.com
E-mail: email@bifma.com

BRICK INSTITUTE OF AMERICA (BIA)

11490 Commerce Park Dr., Suite 308
Reston, VA 22091
Ph: 703-620-0010
Fax: 703-620-3928

BUILDERS HARDWARE MANUFACTURERS ASSOCIATION (BHMA)

355 Lexington Ave. New York, NY 10017-6603
Ph: 212-661-4261
Fax: 212-370-9047
Internet: www.buildershardware.com

BUILDING OFFICIALS & CODE ADMINISTRATORS INTERNATIONAL (BOCA)

4051 W. Flossmoor Rd.
Country Club Hills, IL 60478-5795
Ph: 708-799-2300
Fax: 708-799-4981
E-mail: boca@aecnet.com

BUREAU OF RECLAMATION (BOR)

Dept. of the Interior
P.O. Box 25007
Denver, CO 80225
Ph: 303-236-0305, ext. 457
Order from:
National Technical Information
Services (NTIS)
5285 Port Royal Rd.
Springfield, VA 22161
Ph: 800-553-6847
Fax: 703-321-8547
Internet: http://www.fedworld.gov/ntis/ntishome.html

CALIFORNIA DEPARTMENT OF TRANSPORTATION (CDT)

Publication Distribution Unit
1900 Royal Oaks Dr.
Sacramento, CA 95815
Ph: 916-445-3520 or 916-227-7000 (CA Transportation Lab)

Fax: 916-324-8997

CALIFORNIA REDWOOD ASSOCIATION (CRA)

405 Enfrente Ave., Suite 200
Novato, CA 94949
Ph: 415-382-0662
Fax: 415-382-8531

CANADIAN ELECTRICITY ASSOCIATION (CEA)

1 Westmount Square, Suite 1600
Montreal, Quebec, Canada H3Z 209
Ph: 514-937-6181
Fax: 514-937-6498
Internet: www.canelect.ca
e-mail: info@canelect.ca

CARPET AND RUG INSTITUTE (CRI)

310 Holiday Ave.
P.O. Box 2048
Dalton, GA 30722-2048
Ph: 706-278-0232
Fax: 706-278-8835
Internet: carpet-rug.com

CAST IRON SOIL PIPE INSTITUTE (CISPI)

5959 Shallowford Rd., Suite 419
Chattanooga, TN 37421
Ph: 423-892-0137
Fax: 423-892-0817

CEILINGS & INTERIOR SYSTEMS CONSTRUCTION ASSOCIATION (CISCA)

1500 Lincoln Highway, Suite 202
St. Charles, IL 60174
Ph: 708-584-1919
Fax: 708-584-2003

CHLORINE INSTITUTE (CI)

2001 L St., NW
Washington, DC 20036
Ph: 202-775-2790
Fax: 202-223-7225

CODE OF FEDERAL REGULATIONS (CFR)

Order from:
Government Printing Office
Washington, DC 20402
Ph: 202-512-1800
Fax: 202-275-7703
Internet: http://www.pls.com:8001/his/cfr.html

COMMERCIAL ITEM DESCRIPTIONS (CID)

Order from:
General Services Administration
Federal Supply Service Bureau
470 E L'Enfant Plaza, S.W.
Washington, DC 20407
Ph: 202-619-8925
Internet: http://pub.fss.gsa.gov/h1-pub.html

COMPRESSED GAS ASSOCIATION (CGA)

1725 Jefferson Davis Highway, Suite 1004
Arlington, VA 22202-4102
Ph: 703-412-0900
Fax: 703-412-0128
Internet: www.cganet.com
e-mail: Customer_Service@cganet.com

CONCRETE REINFORCING STEEL INSTITUTE (CRSI)

933 No. Plum Grove Rd.
Schaumburg, IL 60173-4758
Ph: 847-517-1200
Fax: 847-517-1206
Internet: http://www.crsi.org

CONSUMER PRODUCT SAFETY COMMISSION (CPSC)

Washington, DC 20207
Ph: 301-504-0580

CONVEYOR EQUIPMENT MANUFACTURERS ASSOCIATION (CEMA)

9384-D Forestwood Lane
Manassas, VA 22110
Ph: 703-330-7079
Fax: 703-330-7984

COOLING TOWER INSTITUTE (CTI)

P.O. Box 73383
Houston, TX 77273
Ph: 281-583-4087
Fax: 281-537-1721

COPPER DEVELOPMENT ASSOCIATION (CDA)

260 Madison Ave.
New York, NY 10016
Ph: 212-251-7200
Fax: 212-251-7234
E-mail: http://www.copper.org

CORPS OF ENGINEERS (COE)

Order from:
U.S. Army Engineer Waterways Experiment Station
ATTN: Technical Report Distribution Section, Services Branch, TIC
3909 Halls Ferry Rd.

Vicksburg, MS 39180-6199
Ph: 601-634-2571
Fax: 601-634-2506
NOTE: COE Handbook for Concrete and Cement (Documents w/prefix CRD-C) (1949-present; 2 Vol) free to Government offices; $10.00 plus $8.00 per yr for 4 qtrly supplements to others). Individual documents, single copies free. Order from address above.

COUNCIL OF AMERICAN BUILDING OFFICIALS (CABO)

5203 Leesburg Pike, Suite 708
Falls Church, VA 22041
Ph: 703-931-4533
Fax: 703-379-1546

DEPARTMENT OF AGRICULTURE (USDA)

14TH STREET & INDEPENDENCE AVE. S.W.
WASHINGTON, D.C. 20250
Ph: (202) 720-2791
Publications: 301-344-2340

DEPARTMENT OF COMMERCE (DOC)

Order From:
National Technical Information Service
5285 Port Royal Road
Springfield, VA 22161
Ph: 703-487-4600
Fax: 703-321-8547
Internet: http://www.ntis.gov

DEPARTMENT OF DEFENSE (DOD)

Order from:
National Technical Information Service
5285 Port Royal Road
Springfield, VA 22161
Ph: 703-487-4650
FAX: 703-321-8547

DEPARTMENT OF HOUSING AND URBAN DEVELOPMENT (HUD)

Order from:
HUD User
P.O. Box 6091
Rockville, MD 20850
Ph: 800-245-2691
e-mail: Huduser@aspensys.com

DEPARTMENT OF STATE (SD)

ATTN: DS/PSP/SEP
SA-6, Room 804
Washington, DC 20522-0602
Ph: 703-875-6537

DOOR AND ACCESS SYSTEM MANUFACTURERS ASSOCIATION (DASMA)

1300 Sumner Avenue
Cleveland, OH 44115-2851
Ph: 216-241-7333
Fax: 216-241-0105
Internet: www.taol.com/dasma
e-mail: dasma@taol.com

DOOR AND HARDWARE INSTITUTE (DHI)

14170 Newbrook Dr.
Chantilly, VA 20151-2232
Ph: 703-222-2010
Fax: 703-222-2410
Internet: www.dhi.org
E-mail: techdept@dhi.org

DUCTILE IRON PIPE RESEARCH ASSOCIATION (DIPRA)

245 Riverchase Parkway East, Suite 0
Birmingham, AL 35244-1856
Ph: 205-988-9870
Fax: 205-988-9822
Internet: www.dipra.org
E-mail: info@dipra.org

EIFS INDUSTRY MEMBERS ASSOCIATION (EIMA)

402 No. 4th St., Suite 102
Yakima, WA 98901-2470
Ph. 509-457-3500
Fax: 509-457-0169

ELECTRONIC INDUSTRIES ASSOCIATION (EIA)

2500 Wilson Blvd.
Arlington, VA 22201-3834
Ph: 703-907-7500
Fax: 703-907-7501
Internet: www.eia.org
Order Publications from:
Global Engineering Documents
15 Inverness Lane East
Englewood, CO 80112
Ph: 800-854-7179
Fax: 303-397-2740
Internet: http://global.ihs.com

ENGINEERING MANUALS (EM)

USACE Publications Depot
Attn: CEIM-SP-D
2803 52nd Avenue
Hyattsville, MD 20781-1102
Ph: 301-394-0081

ENGINEERING PAMPHLETS (EP)

USACE Publications Depot
Attn: CEIM-SP-D

2803 52nd Avenue
Hyattsville, MD 20781-1102
Ph: 301-394-0081

ENGINEERING REGULATIONS (ER)

USACE Publications Depot
Attn: CEIM-SP-D 2803 52nd Avenue
Hyattsville, MD 20781-1102
Ph: 301-394-0081

ENVIRONMENTAL PROTECTION AGENCY (EPA)

Public Information Center
401 M St., SW
Washington, DC 20460
Ph: 800-490-9198
FAX: 202-260-6257
Internet: http://www.epa.gov
NOTE: Some documents are available only from: National Technical Information Services (NTIS)
5285 Port Royal Rd.
Springfield, VA 22161
Ph: 800-553-6847
Fax: 703-321-8547
Internet: http://www.fedworld.gov/ntis/ntishome.html

EXPANSION JOINT MANUFACTURERS ASSOCIATION (EJMA)

25 No. Broadway
Tarrytown, NY 10591
Ph: 914-332-0040

FACTORY MUTUAL ENGINEERING AND RESEARCH (FM)

1151 Boston-Providence Turnpike
P.O. Box 9102
Norwood, MA 02062-9102
Ph: 617-255-4681
Fax: 617-255-4359
Internet: http://www.factorymutual.com

FEDERAL AVIATION ADMINISTRATION (FAA)

Order from:
Superintendant of Documents
U. S. Government Printing Office
Washington, DC 20402
Ph: 202-512-1800
Fax: 202-512-1356
For free documents, order from:
Federal Aviation Administration
Dept. of Transportation
ATTN: General Services Section M-45
400 Seventh St., SW
Washington, DC 20590-0001
Ph: 202-619-8925
Fax: 202-619-8978
Internet: www.faa.gov

FEDERAL HIGHWAY ADMINISTRATION (FHWA)

Office of Highway Safety (HHS-31)
400 Seventh St., SW
Washington, DC 20590-0001
Ph: 202-366-0411
Fax: 202-366-2249
Order from:
Government Printing Office
Superintendent of Documents
Washington, DC 20402
Ph: 202-783-3238

FEDERAL SPECIFICATIONS (FS)

Order from:
General Services Administration
Federal Supply Service Bureau
470 L'Enfant Plaza, S.W.
Washington, DC 20407
Ph: 202-619-8925
Fax: 202-619-8978
Internet: http://pub.fss.gsa.gov/

FEDERAL STANDARDS (FED-STD)

Order from:
General Services Administration
Federal Supply Service Bureau
470 E L'Enfant Plaza, S.W.
Washington, DC 20407
Ph: 202-619-8925
Fax: 202-619-8978
Internet: http://pub.fss.gsa.gov/

FORESTRY SUPPLIERS (FSUP)

205 West Rankin St.
Jackson, MS 39201
Ph: 800-647-5368
Fax: 800-543-4203
Internet: www.forestry-suppliers.com

FOUNDATION FOR CROSS-CONNECTION CONTROL AND HYDRAULIC RESEARCH (FCCCHR)

USC
KAP-200 University Park MC-2531
Los Angeles, CA 90089-2531
Ph: 213-740-2032
Fax: 213-740-8399

GEOLOGICAL SOCIETY OF AMERICA (GSA)

P.O. Box 9140
Boulder, CO 80301
Ph: 800-472-1988
Fax: 303-447-1133

GEOSYNTHETIC INSTITUTE (GSI)

475 Kedron Ave.
Folsom, PA 19033-1208
Ph: 610-522-8440
Fax: 610-522-8441

GERMANY INSTITUTE FOR STANDARDIZATION (DIN)

Order from:
Global Engineering Documents
15 Inverness Lane East
Englewood, CO 80112
Ph: 800-854-7179
Fax: 303-397-7238

GLASS ASSOCIATION OF NORTH AMERICA (GANA)

3310 S.W. Harrison St.
Topeka, KS 66611-2279
Ph: 913-266-7013
Fax: 913-266-0272
Internet:www.cssinfo.com/info/gana.html

GRETAG MACBETH (GM)

Munsell Department
ATTN: Customer Service
617 Little Britain Road
New Windsor, NY 12553-6184
Ph: 800-662-2384 or 914-566-7660, Ext 347
Fax: 914-561-0267
Internet: http://www.munsell.com/munsell5.htm

GYPSUM ASSOCIATION (GA)

810 First St. NE, Suite 510
Washington, DC 20002
Ph: 202-289-5440
Fax: 202-289-3707

HARDWOOD PLYWOOD & VENEER ASSOCIATION (HPVA)

1825 Michael Faraday Dr.
P.O. Box 2789
Reston, VA 22090-2789
Ph: 202-435-2900
Fax: 703-435-2537

HEAT EXCHANGE INSTITUTE (HEI)

1300 Sumner Ave
Cleveland, OH 44115-2851
Ph: 216-241-7333
Fax: 216-241-0105

H.P. WHITE LABORATORY (HPW)

3114 Scarboro Rd.
Street, MD 21154
Ph: 410-838-6550

HYDRAULIC INSTITUTE (HI)

9 Sylvan Way, Suite 180
Parsippany, NJ 07054-3802
Ph: 888-786-7744 or 973-267-9700
Fax: 973-267-9053

HYDRONICS INSTITUTE DIVISION OF GAMA (HYI)

35 Russo Pl.
P.O. Box 218
Berkeley Heights, NJ 07922-0218
Ph: 908-464-8200
Fax: 908-464-7818
Internet: www.gamanet.org

IBM CORPORATION (IBM)

Publications
P.O. Box 29570
Raleigh, NC 27626-0570
Ph: 800-879-2755, Option 1
Fax: 800-445-9269
Internet: www.ibmink.ibm.com

ILLUMINATING ENGINEERING SOCIETY OF NORTH AMERICA (IESNA)

120 Wall St., 17th Floor
New York, NY 10005-4001
Ph: 212-248-5000
Fax: 212-248-5017
Internet: www.iesna.org

INDUSTRIAL FASTENERS INSTITUTE (IFI)

1717 East 9th St., Suite 1105
Cleveland, OH 44114-2879
Ph: 216-241-1482
Fax: 216-241-5901
Internet: http://www.industrial-fasteners.org
e-mail: indfast@aol.com

INSECT SCREENING WEAVERS ASSOCIATION (ISWA)

P.O. Box 1018
Ossining, NY 10562
Ph: 914-962-9052
Fax: 914-923-3031

INSTITUTE FOR INTERCONNECTING AND PACKAGING ELECTRONIC CIRCUITS (IPC)

2215 Sanders Rd.
Northbrook, IL 60062-6135

Ph: 847-509-9700
Fax: 847-509-9798
Internet: www.ipc.org
e-mail: orderipc@ipc.org

INSTITUTE OF CLEAN AIR COMPANIES (ICAC)

1660 L St., NW, Suite 1100
Washington, DC 20036-5603
Ph: 202-457-0911
Fax: 202-331-1388
E-mail: sjenkins@icac.com
Internet: icac.com

INSTITUTE OF ELECTRICAL AND ELECTRONICS ENGINEERS (IEEE)

445 Hoes Ln, P. O. Box 1331
Piscataway, NJ 08855-1331
Ph: 732-981-0060 OR 800-701-4333
Fax: 732-981-9667
Internet: http//standards.ieee.org
E-mail: customer.service@ieee.org
Note: Documents may also be ordered from:
Global Engineering Documents
15 Inverness Way East
Englewood, CO 80112
Ph: 800-854-7179
Fax:303-397-2740
Internet: global.ihs.com

INSTITUTE OF ENVIRONMENTAL SCIENCES (IES)

940 East Northwest Highway
Mount Prospect, IL 60056
Ph: 847-255-1561
Fax: 847-255-1699

INSULATED CABLE ENGINEERS ASSOCIATION (ICEA)

P.O. Box 440
South Yarmouth, MA 02664
Ph: 508-394-4424
Fax: 508-394-1194
E-mail: www.electricnet.com/orgs/insucbl.htm

INTERNATIONAL APPROVAL SERVICES (IAS)

8501 East Pleasant Valley Rd.
Cleveland, OH 44131
Ph: 216-524-4990
Fax: 216-642-3463
Internet: www.iasapprovals.org

INTERNATIONAL ASSOCIATION OF PLUMBING AND MECHANICAL OFFICIALS (IAPMO)

20001 Walnut Dr., So.
Walnut, CA 91789-2825
Ph: 909-595-8449

Fax: 909-594-3690
Fax for Stds: 909-594-5265
Internet: www.iapmo.org

INTERNATIONAL CONFERENCE OF BUILDING OFFICIALS (ICBO)

5360 Workman Mill Rd.
Whittier, CA 90601-2298
Ph: 310-699-0541
Fax: 310-692-3853

INTERNATIONAL ELECTROTECHNICAL COMMISSION (IEC)

3, rue de Varembe, Case Postale 131
CH-1211 Geneva 20, Switzerland
Ph: 41-22-919-0211
Fax: 41-22-919-0300
Internet: http://www.iec.ch
e-mail: custserv@iec.ch

INTERNATIONAL INSTITUTE OF AMMONIA REFRIGERATION (IIAR)

1200 Nineteenth St., NW, Suite 300
Washington, DC 20036-2912
Ph: 202-857-1110
Fax: 202-223-4579

INTERNATIONAL MUNICIPAL SIGNAL ASSOCIATION (IMSA)

165 East Union St. P.O. Box 539
Newark, NY 14513
Ph: 315-331-2182
Fax: 315-331-8505

INTERNATIONAL ORGANIZATION FOR STANDARDIZATION (ISO)

Internet: www.iso.ch
Order Publications from:
Global Engineering Documents
15 Inverness Lane East
Englewood, CO 80112
Ph: 800-854-7179
Fax: 303-397-7238
Internet: http://global.ihs.com

INTERNATIONAL SLURRY SURFACING ASSOCIATION (ISSA)

1200 Nineteenth St., NW, Suite 300
Washington, DC 20036-2401
Ph: 202-857-1160
Fax: 202-223-4579
Internet: http://www.rochester.edu/issa/

INTERNATIONAL TELECOMMUNICATION UNION (ITU)

Order from:
U.S. Dept of Commerce
National Technical Information Service
585 Port Royal Road.

Springfield, VA 22161
Ph: 703-487-4660
FAX: 703-321-8547
For documents not avail from Dept of Commerce:
E-Mail: sales@itu.ch
Fax: 41.22.730.5194

IRON & STEEL SOCIETY (ISS)

410 Commonwealth Dr.
Warrendale, PA 15086-7512
Ph: 412-776-1535, ext. 1
Fax: 412-776-0430
E-Mail: custserv @ issource.org
Internet: www.issourse.org

ISA (ISA)

67 Alexander Drive
P.O. Box 12277
Research Triangle Park, NC 27709
Ph: 919-549-8411
Fax: 919-549-8288
e-mail: ISA@isa.org
Internet: http://www.isa.org

KITCHEN CABINET MANUFACTURERS ASSOCIATION (KCMA)

1899 Preston White Dr.
Reston, VA 20191-5435
Ph: 703-264-1690
Fax: 703-620-6530
Internet: www.kcma.org

MANUFACTURERS STANDARDIZATION SOCIETY OF THE VALVE AND FITTINGS INDUSTRY (MSS)

127 Park St., NE
Vienna, VA 22180-4602
Ph: 703-281-6613
Fax: 703-281-6671
Internet: //cssinfo.com/info/mss/html

MAPLE FLOORING MANUFACTURERS ASSOCIATION (MFMA)

60 Revere Dr., Suite 500
Northbrook, IL 60062
Ph: 847-480-9138
Fax: 847-480-9282
e-mail: mfma@maplefloor.com

MARBLE INSTITUTE OF AMERICA (MIA)

33505 State St.
Farmington, MI 48335
Ph: 810-476-5558
Fax: 810-476-1630

MATERIAL HANDLING INDUSTRY (MHI)

8720 Red Oak Blvd., Suite 201
Charlotte, NC 28217-3992
Ph: 800-345-1815 or 704-522-9644
Fax: 704-522-7826

METAL BUILDING MANUFACTURERS ASSOCIATION (MBMA)

1300 Sumner Ave.
Cleveland, OH 44115-2851
Ph: 216-241-7333
Fax: 216-241-0105

MIDWEST INSULATION CONTRACTORS ASSOCIATION (MICA)

2017 So. 139th Cir.
Omaha, NE 68144
Ph: 402-342-3463
Fax: 402-330-9702

MILITARY HANDBOOKS (MIL-HDBK)

Order from:
Standardization Documents Order Desk
Bldg 4D
700 Robbins AV
Philadelphia, PA 19111-5094
Ph: 215-697-2179
Fax: 215-697-2978
Internet: www.dodssp.daps.mil

MILITARY SPECIFICATIONS (MS)

Order from:
Standardization Documents Order Desk
Building 4, Section D
700 Robbins Ave.
Philadelphia, PA 19111-5094
Ph: 215-697-2179
Fax: 215-697-2978
Internet: www.dodssp.daps.mil

MILITARY STANDARDS (MIL-STD)

Order from:
Standardization Documents Order Desk
Building 4, Section D
700 Robbins Ave.
Philadelphia, PA 19111-5094
Ph: 215-697-2179
Fax: 215-697-2978
Internet: www.dodssp.daps.mil

NACE INTERNATIONAL (NACE)

1440 South Creek Drive
Houston, TX 77084-4906
Ph: 281-228-6200
Fax: 281-228-6300

Internet: www.nace.org

NATIONAL ASSOCIATION OF ARCHITECTURAL METAL MANUFACTURERS (NAAMM)

8 So. Michigan Ave, Suite 100
Chicago, IL 60603
Ph: 312-782-4951
Internet: www.naam.org

NATIONAL ASSOCIATION OF PLUMBING-HEATING-COOLING CONTRACTORS (NAPHCC)

180 S. Washington Street
P.O. Box 6808
Falls Church, VA 22046
Ph: 800-533-7694
Fax: 703-237-7442

NATIONAL BOARD OF BOILER AND PRESSURE VESSEL INSPECTORS (NBBPVI)

1055 Crupper Ave.
Columbus, OH 43229-1183
Ph: 614-888-2463
Fax: 614-847-1147
e-mail: orders @ nationalboard.org

NATIONAL CABLE TELEVISION ASSOCIATION (NCTA)

1724 Massachusetts Ave. NW
Washington, DC 20036-1969
Ph: 202-775-3550
Fax: 202-775-3698

NATIONAL COUNCIL ON RADIATION PROTECTION AND MEASUREMENTS (NCRP)

7910 Woodmont Ave., Suite 800
Bethesda, MD 20814-3095
Ph: 800-229-2652
Fax: 301-907-8768

NATIONAL DRILLING ASSOCIATION (NDA)

3008 Millwood Avenue
Columbia, SC 29205
Ph: 800-445-8629
Fax: 803-765-0860

NATIONAL ELECTRICAL MANUFACTURERS ASSOCIATION (NEMA)

1300 N. 17th St., Suite 1847
Rosslyn, VA 22209
Ph: 703-841-3200
Fax: 202-457-8473
Internet: http//www.nema.org/
Order Publications from:
Global Engineering Documents
15 Inverness Way East
Englewood, CO 80112-5776

Ph: 800-264-3974
Fax: 303-397-7935
Internet: http://global.ihs.com

NATIONAL ENVIRONMENTAL BALANCING BUREAU (NEBB)

8575 Grovemont Circle
Gaithersburg, MD 20877-4121
Ph: 301-977-3698
Fax: 301-977-9589

NATIONAL FIRE PROTECTION ASSOCIATION (NFPA)

One Batterymarch Park P.O. Box 9101
Quincy, MA 02269-9101
Ph: 800-344-3555
Fax: 800-593-6372
Internet: http://www.nfpa.org
NOTE: The complete set of 1997 NFPA National Fire Codes (13 Vol.) is available for $835.00.

NATIONAL FLUID POWER ASSOCIATION (NFLPA)

3333 No. Mayfair Rd.
Milwaukee, WI 53222-3219
Ph: 414-778-3363
Fax: 414-778-3361
Internet: www.nfpa.com
E-mail: nfpa@nfpa.com

NATIONAL HARDWOOD LUMBER ASSOCIATION (NHLA)

P.O. Box 34518
Memphis, TN 38184-0518
Ph: 901-377-1818
Fax: 901-382-6419
e-mail: nhla@natlhardwood.org

NATIONAL INSTITUTE FOR CERTIFICATION IN ENGINEERING TECHNOLOGIES (NICET)

1420 King Street
Alexandria, VA 22314-2794
Ph: 888-476-4238
Internet: www.nicet.org

NATIONAL INSTITUTE FOR OCCUPATIONAL SAFETY AND HEALTH (NIOSH)

Mail Stop C-13
4676 Columbia Parkway
Cincinnati, OH 45226-1998
Ph: 800-356-4676
Internet: http://www.cdc.gov/niosh/homepage.html
To order pubs for which a fee is charged, order from:
Superintendent of Documents
Government Printing Office
Washington, DC 20402-9325
Ph: 202-512-1800
Fax: 202-512-2250

NATIONAL INSTITUTE OF JUSTICE (NIJ)

National Law Enforcement and Corrections Technology Center
2277 Research Blvd. - Mailstop 1E
Rockville, MD 20850
Ph: 800-248-2742 or 301-519-5060
Fax: 301-519-5179
Internet: http://www.nlectc.org
e-mail: nlectc@aspensys.com

NATIONAL INSTITUTE OF STANDARDS AND TECHNOLOGY (NIST)

Department of Commerce
Gaithersburg, MD 20899-0001
Ph: 301-975-4025
Fax: 301-926-1630
Order Publications From:
Superintendent of Documents
U.S. Government Printing Office (GPO)
Washington, DC 20402
Ph: 202-512-1800
Fax: 202-512-2250
or
National Technical Information Services (NTIS)
5285 Port Royal Rd.
Springfield, VA 22161
Ph: 800-553-6847
Fax: 703-321-8547
Internet: http://ww.gov/ntis.gov

NATIONAL LIME ASSOCIATION (NLA)

200 No. Glebe Rd., Suite 800
Arlington, VA 22203-3728
Ph: 703-243-5463
Fax: 703-243-5489

NATIONAL OAK FLOORING MANUFACTURERS ASSOCIATION (NOFMA)

P.O. Box 3009
Memphis, TN 38173-0009
Ph: 901-526-5016
Fax: 901-526-7022

NATIONAL READY-MIXED CONCRETE ASSOCIATION (NRMCA)

900 Spring St.
Silver Spring, MD 20910
Ph: 301-587-1400
Fax: 301-585-4219

NATIONAL ROOFING CONTRACTORS ASSOCIATION (NRCA)

P.O. Box 809261
Chicago, IL 60680-9261
Ph: 800-323-9545
Fax: 708-299-1183

NATIONAL TERRAZZO & MOSAIC ASSOCIATION (NTMA)

3166 DesPlaines Ave., Suite 132
DesPlaines, IL 60018
Ph: 708-635-7744
Fax: 708-635-9127

NATIONAL WOOD WINDOW & DOOR ASSOCIATION (NWWDA)

1400 East Touhy Ave., Suite G-54
Des Plaines, IL 60018
Ph: 847-299-5200
Fax: 708-299-1286

NAVAL FACILITIES ENGINEERING COMMAND (NAVFAC)

1510 Gilbert St.
Norfolk, VA 23511-2699
Ph: 757-322-4200
Fax: 757-322-4416

NAVAL FACILITIES ENGINEERING SERVICE CENTER (NFESC)

560 Center Drive
Port Hueneme, CA 93043-4328
Ph: 805-982-9110

NORTH AMERICAN INSULATION MANUFACTURERS ASSOCIATION (NAIMA)

44 Canal Center Plaza, Suite 310
Alexandria, VA 22314
Ph: 703-684-0084

NORTHEASTERN LUMBER MANUFACTURERS ASSOCIATION (NELMA)

P.O. Box 87A
Cumberland Center, ME 04021
Ph: 207-829-6901
Fax: 207-829-4293

NORTHEAST REGIONAL AGRICULTURAL ENGINEERING SERVICE (NRAES)

Cooperative Extension
152 Riley-Robb Hall
Ithaca, NY 14853-5701
Ph: 607-255-7654
Fax: 607-254-8770
Internet: http://rcwpsun.cas.psu.edu/nraes
E-mail: nraes@cornell.edu

NSF INTERNATIONAL (NSF)

ATTN: Publications
P.O. Box 130140
Ann Arbor, MI 48113-0140
Ph: 313-913-5744
Fax: 313-769-0109
Internet: www.nsf.org

PIPE FABRICATION INSTITUTE (PFI)

P.O. Box 173
Springdale, PA 15144
Ph: 412-274-4722
Fax: 412-274-4722

PLASTIC PIPE AND FITTINGS ASSOCIATION (PPFA)

800 Roosevelt Rd., Bldg C, Suite 20
Glen Ellyn, IL 60137
Ph: 630-858-6540
Fax: 630-790-3095

PLASTICS PIPE INSTITUTE (PPI)

1801 L St. NW, Suite 600K
Washington, D. C. 20006-1301
Ph: 888-314-6774
Fax: 202-293-0048
Internet: http://www.plasticpipe.org
Order Publications from:
SPI
P. O. Box 753
Waldorf, MD 20604
Ph: 202-974-5332
Fax: 800-541-0736 or 202-296-7359

PLUMBING AND DRAINAGE INSTITUTE (PDI)

45 Bristol Dr., Suite 101.
South Easton, MA 02375
Ph: 508-230-3516
Fax: 508-230-3529
E-Mail: pdhw@tiac.net

PLUMBING AND PIPING INDUSTRY COUNCIL (PPIC)

501 Shatto Place, Suite 402
Los Angeles, CA 90020
Ph: 213-487-3790
Fax: 213-487-3880

PORCELAIN ENAMEL INSTITUTE (PEI)

4004 Hillsboro Pike, Suite 224B
Nashville, TN 37215
Ph: 615-385-5357
Fax: 615-385-5463
Internet: www.porcelainenamel.com

PRECAST/PRESTRESSED CONCRETE INSTITUTE (PCI)

175 West Jackson Blvd., Suite 1859
Chicago, IL 60604-9773
Ph: 312-786-0300
Fax: 312-786-0353
Internet: www.pci.org
e-mail: info@pci.org

RUBBER MANUFACTURERS ASSOCIATION (RMA)

1400 K St., NW
Washington, DC 20005
Ph: 202-682-4866
Fax: 202-682-4810
Order Publications from:
The Mail Room
P. O. Box 3147
Medina, OH 44258
Ph: 800-325-5098 or 330-723-2987
Fax: 330-725-0576

RURAL UTILITIES SERVICE (RUS)

ATTN: Publications
14th and Independence Ave., SW, Room 4028-S
Washington, DC 20250
Ph: 202-720-8674 OR 202-720-8679
Fax: 202-205-3654
Internet: www.usda.gov/rus/home/home.htm

SCREEN MANUFACTURERS ASSOCIATION (SMA)

2850 South Ocean Boulevard, Suite 114
Palm Beach, FL 33480-5535
Ph: 561-533-0991
Fax: 561-533-7466
e-mail: fscottfitzgerald@compuserve.com

SHEET METAL & AIR CONDITIONING CONTRACTORS' NATIONAL ASSOCIATION (SMACNA)

P.O. Box 221230
Chantilly, VA 20153-1230
Ph: 703-803-2980
Fax: 703-803-3732
Internet: http://www.smacna.org

SINGLE PLY ROOFING INSTITUTE (SPRI)

200 Reservoir St., Suite 309A
Needham, MA 02494
Ph: 781-444-0242
Fax: 781-444-6111
Internet: www.spri.org

SOCIETY OF AUTOMOTIVE ENGINEERS (SAE)

400 Commonwealth Dr.
Warrendale, PA 15096-0001
Ph: 724-776-4970
Fax: 724-776-0790
Internet: http://www.sae.org
e-mail: publications@sae.org

SOUTHERN BUILDING CODE CONGRESS INTERNATIONAL (SBCCI)

900 Montclair Road
Birmingham, AL 35213-1206
Ph: 205-591-1853
Fax: 205-591-0775

SOUTHERN CYPRESS MANUFACTURERS ASSOCIATION (SCMA)

400 Penn Center Boulevard, Suite 530
Pittsburgh, PA 15235
Ph: 412-829-0770
Fax: 412-829-0844

SOUTHERN PINE INSPECTION BUREAU (SPIB)

4709 Scenic Highway
Pensacola, FL 32504-9094
Ph: 850-434-2611
Fax: 850-433-5594
e-mail: spib@spib.org

SSPC: THE SOCIETY FOR PROTECTIVE COATINGS (SSPC)

40 24th Street, 6th Floor
Pittsburgh, PA 15222-4656
Ph: 412-281-2331
Fax: 412-281-9992
Internet: www.sspc.org
NOTE: SSPC documents, except as noted otherwise, are available only as a part of the 1995 Steel Structures Painting Manual, 7th Edition @ $115.00. \F

STEEL DECK INSTITUTE (SDI)

P.O. Box 25
Fox River Grove, IL 60021
Ph: 847-462-1930
Fax: 847-462-1940
Internet: http://www.sdi.org
e-mail: janet@sdi.org

STEEL DOOR INSTITUTE (SDOI)

30200 Detroit Rd.
Cleveland, OH 44145-1967
Ph: 216-899-0010
Fax: 216-892-1404

STEEL JOIST INSTITUTE (SJI)

3127 Tenth Ave., North Ext.
Myrtle Beach, SC 29577-6760
Ph: 803-626-1995
Fax: 803-626-5565

STEEL TANK INSTITUTE (STI)

570 Oakwood Rd.
Lake Zurich, IL 60047
Ph: 847-438-8265

Fax: 847-438-4500
Internet: www.steeltank.com
e-mail: technic@interaccess.com

STEEL WINDOW INSTITUTE (SWI)

1300 Sumner Ave.
Cleveland, OH 44115-2851
Ph: 216-241-7333
Fax: 216-241-0105

TILE COUNCIL OF AMERICA (TCA)

P.O. Box 1787
Clemson, SC 29633-1787
Ph: 864-646-8453
FAX: 864-646-2821

TRUSS PLATE INSTITUTE (TPI)

583 D'Onofrio Dr., Suite 200
Madison, WI 53719
Ph: 608-833-5900
Fax: 608-833-4360

TUBULAR EXCHANGE MANUFACTURERS ASSOCIATION (TEMA)

25 N. Broadway
Tarrytown, NY 10591
Ph: 914-332-0040
Fax: 914-332-1541

UNDERWRITERS LABORATORIES (UL)

333 Pfingsten Rd.
Northbrook, IL 60062-2096
Ph: 800-704-4050
Fax: 847-509-6249
Internet: http://www.ul.com/
Order from:
Global Engineering Documents
15 Inverness Way East
Englewood, CO 80112-5776
Ph: 800-569-7128
Fax: 303-397-7945
Internet: http://global.ihs.com
E-mail: global@ihs.com
Note: First price is for std only. Second price is for Std, incl Revision Subscription Service.

UNI-BELL PVC PIPE ASSOCIATION (UBPPA)

2655 Villa Creek Dr., Suite 155
Dallas, TX 75234
Ph: 214-243-3902
Fax: 214-243-3907

U. S. ARMY ENVIORNMENTAL HYGIENE AGENCY (USAEHA)

Waste Disposal Engineering Division
Aberdeen Proving Ground, MD 21010-5422
Ph: 410-671-3652

WATER ENVIRONMENT FEDERATION (WEF)

601 Wythe St.
Alexandria, VA 22314-1994
Ph: 703-684-2400
Fax: 703-684-2492
Internet: www.wef.org

WATER QUALITY ASSOCIATION (WQA)

4151 Naperville Rd.
Lisle, IL 60532
Ph: 630-505-0160
Fax: 630-505-9637

WEST COAST LUMBER INSPECTION BUREAU (WCLIB)

P.O. Box 23145
Portland, OR 97281
Ph: 503-639-0651
Fax: 503-684-8928

WESTERN WOOD PRESERVERS INSTITUTE (WWPI)

7017 N.E. Highway 99 # 108
Vancover, WA 98666
Ph: 360-693-9958
Fax: 360-693-9967

WESTERN WOOD PRODUCTS ASSOCIATION (WWPA)

Yeon Bldg.
522 SW 5th Ave.
Portland, OR 97204-2122
Ph: 503-224-3930
Fax: 503-224-3934

WOOD MOULDING AND MILLWORK PRODUCERS ASSOCIATION (WMMPA)

507 First Street
Woodland, CA 95695
Ph: 916-661-9591
Fax: 916-661-9586

-- End of Section --

SECTION TABLE OF CONTENTS

DIVISION 01 - GENERAL REQUIREMENTS

SECTION 01200

WARRANTY OF CONSTRUCTION

5/00; Rev 02/02

PART 1 GENERAL

1.1 WARRANTY OF CONSTRUCTION
1.2 ADDITIONAL WARRANTY REQUIREMENTS
1.2.1 Performance Bond
1.2.2 Pre-Warranty Conference
1.2.3 Equipment Warranty Identification
1.2.4 Warranty Service Calls
1.2.5 Equipment Warranty Booklet
1.3 SUBMITTALS
1.4 EQUIPMENT WARRANTY IDENTIFICATIONS TAGS
1.4.1 GENERAL REQUIREMENTS
1.4.1.1 Tags and Information
1.4.1.2 Tags for Warranted Equipment
1.4.1.3 Exclusion to Providing Tags
1.4.2 EXECUTION
1.4.3 Equipment Warranty Tag Replacement

PART 2 NOT USED

PART 3 NOT USED

-- End of Section Table of Contents --

SECTION 01200

WARRANTY OF CONSTRUCTION
5/00; Rev 02/02

PART 1 GENERAL

1.1 WARRANTY OF CONSTRUCTION

(a) Foremost and in addition to any other warranties in this contract, the Contractor warrants, except as provided in paragraph (i) of this clause, that work performed under this contract conforms to the contract requirements and is free of any defect in equipment, material, design furnished, or workmanship performed by the Contractor or any subcontractor or supplier at any tier.

(b) This warranty shall continue for a period of 1 year from the date of final acceptance of the work. If the Government takes possession of any part of the work before final acceptance, this warranty shall continue for a period of 1 year from the date the Government takes possession.

(c) The Contractor shall remedy at the Contractor's expense any failure to conform, or any defect. In addition, the Contractor shall remedy at the Contractor's expense any damage to Government-owned or controlled real or personal property, when that damage is the result of--

(1) The Contractor's failure to conform to contract requirements; or

(2) Any defect of equipment, material, workmanship, or design furnished by the Contractor.

(d) The Contractor shall restore any work damaged in fulfilling the terms and conditions of this clause.

(e) The Contractor's warranty with respect to work restored, repaired or replaced will run for 1 year from the date of restoration, repair or replacement. This provision applies equally to all items restored, repaired, or replaced under paragraph (c) and (d) above.

(f) The Government will notify the Contractor, in writing, within a reasonable time after the discovery of any failure, defect, or damage. Repair work necessary to correct a warranty condition which arises to threaten the health or safety of personnel, the physical safety of property or equipment, or which impairs operations, habitability of living spaces, etc., will be performed by the Contractor on an immediate basis as directed verbally by the Government. Written verification will follow verbal instruction.

(g) If the Contractor fails to remedy any failure, defect, or damage within a reasonable time after receipt of verbal or written notice, the Government shall have the right to replace, repair, or otherwise remedy the failure, defect, or damage at the Contractor's expense.

(h) With respect to all warranties, express or implied, from subcontractors, manufacturers, or suppliers for work performed and materials furnished under this contract, the Contractor shall--

(1) Obtain all warranties that would be given in normal commercial practice;

(2) Require all warranties to be executed, in writing, for the benefit of the Government, if directed by the Contracting Officer; and

(3) Enforce all warranties for the benefit of the Government, if directed by the Contracting Officer.

(i) In the event the Contractor's warranty under paragraph (b) of this clause has expired, the Government may bring suit at its expense to enforce a subcontractor's, manufacturer's, or supplier's warranty.

(j) Unless a defect is caused by the negligence of the Contractor or subcontractor or supplier at any tier, the Contractor shall not be liable for the repair of any defects of material or design furnished by the Government nor for the repair of any damage that results from any defect in Government-furnished material or design.

(k) This warranty shall not limit the Government's rights under the Inspection and Acceptance clause of this contract with respect to latent defects, gross mistakes, or fraud.

1.2 ADDITIONAL WARRANTY REQUIREMENTS

1.2.1 Performance Bond

(a) It is understood that the Contractor's Performance Bond will remain effective for one (1) year from the date of acceptance.

(b) If either the Contractor or his representative doesn't diligently pursue warranty work to completion, the contractor and surety will be liable for all costs. The Government, at its option, will either have the work performed by others or require the surety to have it done. Both direct and administrative costs will be reimbursable to the Government.

1.2.2 Pre-Warranty Conference

(a) Prior to contract completion and at a time designated by the Contracting Officer or his authorized representative, the Contractor shall meet with the Contracting Officer or his authorized representative to develop a mutual understanding with respect to the requirements of the Paragraph: WARRANTY OF CONSTRUCTION. Communication procedures for Contractor notification of warranty defects, priorities with respect to the type of defect and other details deemed necessary by the Contracting Officer or his authorized representative for the execution of the construction warranty shall be established/reviewed at this meeting.

(b) In connection with these requirements and at the time of the Contractor's quality control completion inspection, the Contractor will furnish the name, telephone number and address of the service

representative which is authorized to initiate and pursue warranty work action on behalf of the Contractor and surety. This single point of contact will be located within the local service area of the warranted construction, will be continuously available, and will be responsive to Government inquiry on warranty work action and status. This requirement does not relieve the Contractor of any Contractual responsibilities in connection with the paragraph: WARRANTY OF CONSTRUCTION.

(c) Local service area is defined as the area in which the contractor or his representative can meet the response times as described in paragraph 1.2.4 and in any event shall not exceed 200 miles radius of the construction site.

1.2.3 Equipment Warranty Identification

The Contractor shall provide warranty identification tags on all mechanical and electrical equipment installed under this contract. Tags and installation shall be in accordance with the requirements of Paragraph: EQUIPMENT WARRANTY IDENTIFICATION TAGS.

1.2.4 Warranty Service Calls

The Contractor or his local service representative will respond to the site, to a call within the time periods as follows: Four (4) hours for Heating, Air Conditioning, Refrigeration, Air Supply and Distribution, Critical Electrical service Systems and Food Service Equipment and Twenty-Four (24) hours For All Other Systems.

1.2.5 Equipment Warranty Booklet

At or before 30 days prior to final inspection and acceptance of the work, the Contractor shall submit the data mentioned as follows:

The Contractor shall provided a Booklet, which consists of a listing of all equipment items (see paragraphs a. and b. below) which are specified to be guaranteed along with the warranty papers for each piece of equipment. Three (3) legible bound copies of the booklet shall be submitted for approval and shall be indexed alphabetically by equipment type. For each specific guaranteed item, the name, address, and telephone number shall be shown on the list for the subcontractor who installed equipment, equipment supplier or distributor, and equipment manufacturer. Completion date of the guarantee period shall correspond to the applicable specification requirements for each guaranteed item. The names of service representatives that will make warranty calls along with the day, night, weekend and holiday contacts for response to a call within the time period specified shall also be identified.

a. For Equipment in Place: The equipment list shall show unit retail value and nameplate data including model number, size, manufacturer, etc. This would include capital equipment and other nonexpendable supplies of a movable nature that are not affixed as an integral part of the facility and may be removed without destroying or reducing the usefulness of the facility. Some examples are spare parts, special tools, manufacturing equipment, maintenance equipment, instruments, installed under this contract.

b. For Installed Building Equipment: The equipment list shall show unit retail value and nameplate data including model number, size, manufacturer,

etc. This would include items of equipment and furnishings (including material for installation thereof), which are required to make the facility usable and are affixed as a permanent part of the structure. Some examples are plumbing fixtures, laboratory counters and cabinets, kitchen equipment, mechanical equipment, electrical equipment, and fire protection systems installed under this contract.

1.3 SUBMITTALS

Government approval is required for submittals with a "G" designation; submittals not having a "G" designation are for information only. When used, a designation following the "G" designation identifies the office that will review the submittal for the Government. The following shall be submitted in accordance with Section 01330SUBMITTAL PROCEDURES:

SD-11 Closeout Submittals

Equipment Warranty Booklet

1.4 EQUIPMENT WARRANTY IDENTIFICATIONS TAGS

1.4.1 GENERAL REQUIREMENTS

The Contractor shall provide warranty identification tags on all Contractor and government furnished equipment which is Contractor installed.

1.4.1.1 Tags and Information

The tags and information shall be similar in format and size to the exhibits provided by this specification, and shall be suitable for interior and exterior locations, resistant to solvents, abrasion, and to fading caused by sunlight, precipitation, etc. These tags shall have a permanent pressure- sensitive adhesive back, and shall be installed in a position that is easily (or most easily) noticeable. If the equipment surface is not suitable for adhesive back, Contractor shall submit his alternative to the Contracting Officer's Authorized Representative for review and approval. Contractor furnished equipment that has differing warranties on its components will have each component tagged.

1.4.1.2 Tags for Warranted Equipment

The tag for his equipment shall be similar to the following:

```
+-------------------------------------------+
¦            EQUIPMENT WARRANTY             ¦
¦                                           ¦
¦      CONTRACTOR FURNISHED EQUIPMENT       ¦
¦                                           ¦
¦                                           ¦
¦ MFG----------------MODEL NO.-----------   ¦
¦                                           ¦
¦ SERIAL NO.------------------------------  ¦
¦                                           ¦
¦ CONTRACT NO.----------------------------  ¦
¦                                           ¦
¦ CONTRACTOR NAME-------------------------  ¦
¦                                           ¦
¦ CONTRACTOR ADDRESS----------------------  ¦
¦                                           ¦
```

```
¦ CONTRACTOR TELEPHONE-------------------- ¦
¦                                          ¦
¦ CONTRACTOR WARRANTY EXPIRES------------- ¦
¦                                          ¦
¦ IN CASE OF WARRANTY ACTION FIRST CONTACT ¦
¦                                          ¦
¦     [DEH] [BCE] AT [TELEPHONE NUMBER]    ¦
¦                                          ¦
+------------------------------------------+
```

```
+--------------------------------------------------+
¦                                                  ¦
¦                EQUIPMENT WARRANTY                ¦
¦                                                  ¦
¦          GOVERNMENT FURNISHED EQUIPMENT          ¦
¦                                                  ¦
¦  MFG _________________  MODEL NO._______________ ¦
¦                                                  ¦
¦  SERIAL NO. ____________________________________ ¦
¦                                                  ¦
¦  CONTRACT NO. __________________________________ ¦
¦                                                  ¦
¦  DATE EQUIP PLACED IN SERVICE ________________   ¦
¦                                                  ¦
+--------------------------------------------------+
```

1.4.1.3 Exclusion to Providing Tags

If the manufacturer's name (MFG), model number and serial number are on the manufacturer's equipment data plate and this data plate is easily found and fully legible, this information need not be duplicated on the equipment warranty tag. The Contractor's warranty expiration date and the final manufacturer's warranty expiration date will be determined as specified by the Paragraph "WARRANTY OF CONSTRUCTION".

1.4.2 EXECUTION

The Contractor will complete the required information on each tag and install these tags on the equipment by the time of and as a condition of final acceptance of the equipment. The Contractor shall be responsible for scheduling acceptance inspection with the Contracting Officer (verbal and written notification required). If this inspection is delayed by the Contractor, the Contractor shall, at his own expense, update the in-service and warranty expiration dates on these tags.

1.4.3 Equipment Warranty Tag Replacement

Under the terms of this contract, the Contractor's warranty with respect to work repaired or replaced shall run for one year from the date of repair or replacement. Such activity shall include a data warranty identification tag on the repaired or replaced equipment. The tag shall be furnished and installed by the Contractor, and shall be similar to the original tag, except that it should include the scope of repair and that the contractor's warranty expiration date will be one year from the date of acceptance of the repair or replacement. In the case of repair, the repair only will be covered by the extended warranty. In the case of replacement of a component, the component only will be covered by the extended warranty. In these cases, the original tags will not be removed, but an additional tag

will be installed for the repair or component replacement.

PART 2 NOT USED

PART 3 NOT USED

-- End of Section --

This page was intentionally left blank for duplex printing.

SECTION TABLE OF CONTENTS

DIVISION 01 - GENERAL REQUIREMENTS

SECTION 01330

SUBMITTAL PROCEDURES

09/01; Omaha Update 08/03

PART 1 GENERAL

1.1 CONTRACTOR RESPONSIBILITIES
1.2 SUBMITTAL IDENTIFICATION (SD)
1.3 SUBMITTAL CLASSIFICATION
1.3.1 Government Approved
1.3.2 Information Only (FIO)
1.3.3 Administrative Submittals
1.4 APPROVED SUBMITTALS
1.5 DISAPPROVED SUBMITTALS
1.6 WITHHOLDING OF PAYMENT
1.7 GENERAL
1.8 SUBMITTAL REGISTER AND ENG FORM 4288 (RMS) SUBMITTAL REGISTER
1.9 SCHEDULING
1.10 TRANSMITTAL FORM (ENG FORM 4025)
1.11 SUBMITTAL PROCEDURES
1.11.1 Procedures
1.11.1.1 "G-DO" or "G-AE" Submittals
1.11.1.2 "G-AO" and FIO Submittals
1.11.1.3 Certificates of Compliance
1.11.1.4 Purchase Orders
1.11.1.5 Operation and Maintenance Instructions and/or Manuals
1.11.1.6 Interior/Exterior Finish Sample and Data
1.11.2 Deviations
1.12 CONTROL OF SUBMITTALS
1.13 FINAL COPY OF GOVERNMENT APPROVED SUBMITTALS
1.13.1 "G-AE" or "G-DO" Submittals
1.13.2 "G-AO" Submittals
1.14 INFORMATION ONLY SUBMITTALS
1.15 STAMPS

-- End of Section Table of Contents --

SECTION 01330

SUBMITTAL PROCEDURES
09/01; Omaha Update 08/03

PART 1 GENERAL

Attachments: Submittal Register
ENG Form 4025, Transmittal Form

1.1 CONTRACTOR RESPONSIBILITIES

The Contractor is responsible for total management of his work including scheduling, control, and certification of all submittals. The submittal management system provided in these specifications is intended to be a complete system for the Contractor to use to control the quality of materials, equipment and workmanship provided by manufacturers, fabricators, suppliers and subcontractors. The Contractor shall review each submittal for contract compliance. Submittals that comply will be forwarded to the Government. Submittals that do not conform will be returned to the originator to be corrected. The Submittal Register (ENG Form 4288) will be utilized to log and monitor all submittal activities. No construction or installation activities shall be performed prior to required approvals of applicable submittals. The Contractor shall perform a check to assure that all materials and/or equipment have been tested, submitted and approved during the preparatory phase of quality control inspections.

1.2 SUBMITTAL IDENTIFICATION (SD)

Submittals required are identified by SD numbers and titles as follows:

SD-01 Preconstruction Submittals

Tabular lists showing location, features, or other pertinent information regarding products, materials, equipment, or components to be used in the work.

In addition, the following items are included:

Work plan
Quality control plan
Permits

SD-02 Shop Drawings

Submittals which graphically show relationship of various components of the work, schematic diagrams of systems, details of fabrication, layouts of particular elements, connections, and other relational aspects of the work.

SD-03 Product Data

Catalog cuts, illustrations, schedules, diagrams, performance charts, instructions and brochures illustrating size, physical appearance and other characteristics of materials or equipment for some portion of the work.

Samples of warranty language when the contract requires extended product warranties.

SD-04 Samples

Samples, including both fabricated and unfabricated physical examples of materials, products, and units of work as complete units or as portions of units of work.

Physical examples of materials, equipment or workmanship that illustrate functional and aesthetic characteristics of a material or product and establish standards by which the work can be judged. Color samples from the manufacturer's standard line (or custom color samples if specified) to be used in selecting or approving colors for the project.

Field samples and mock-ups constructed on the project site establish standards by which the ensuring work can be judged. Includes assemblies or portions of assemblies which are to be incorporated into the project and those which will be removed at conclusion of the work.

SD-05 Design Data

Calculations, mix designs, analyses or other data pertaining to a part of work.

SD-06 Test Reports

Report signed by authorized official of testing laboratory that a material, product or system identical to the material, product or system to be provided has been tested in accordance with specified requirements. (Testing must have been within three years of date of contract award for the project.)

Report which includes findings of a test required to be performed by the contractor on an actual portion of the work or prototype prepared for the project before shipment to job site.

Report which includes finding of a test made at the job site or on sample taken from the job site, on portion of work during or after installation.

Investigation reports

Daily checklists

Final acceptance test and operational test procedure

SD-07 Certificates

A document, required of the Contractor, or through the Contractor, from a supplier, installer, manufacturer, or other lower tier Contractor, the purpose of which is to confirm the quality or orderly progression of a portion of the work by documenting procedures, acceptability of methods or personnel, qualifications, or other verifications of quality.

Statement signed by an official authorized to certify on behalf of the manufacturer of a product, system or material, attesting that the product, system or material meets specified requirements. The statement must be dated after the award of the contract, must state the Contractor's name and

address, must name the project and location, and must list the specific requirements which are being certified.

Confined space entry permits.

SD-08 Manufacturer's Instructions

Preprinted material describing installation of a product, system or material, including special notices and material safety data sheets, if any, concerning impedances, hazards, and safety precautions.

SD-09 Manufacturer's Field Reports

Documentation of the testing and verification actions taken by manufacturer's representative to confirm compliance with manufacturer's standards or instructions.

Factory test reports.

SD-10 Operation and Maintenance Data

Data intended to be incorporated in operations and maintenance manuals.

SD-11 Closeout Submittals

Documentation to record compliance with technical or administrative requirements or to establish an administrative mechanism.

In addition, the following items are included:

As-built drawings

Special warranties

Posted operating instructions

Training plan

1.3 SUBMITTAL CLASSIFICATION

Submittals are classified as follows:

1.3.1 Government Approved

Governmental approval is required for extensions of design, critical materials, deviations, equipment whose compatibility with the entire system must be checked, and other items as designated by the Contracting Officer. Within the terms of the Contract Clause entitled "Specifications and Drawings for Construction," they are considered to be "shop drawings." All submittals noted in the technical specifications and Submittal Register as "G-DO", "G-AE" or "G-AO" are subject to Government Approval.

1.3.2 Information Only (FIO)

All submittals not requiring Government approval will be for information only. They are not considered to be "shop drawings" within the terms of the Contract Clause referred to above. The Contracting Officer has the option to review any submittal.

1.3.3 Administrative Submittals

The submittal items listed below are not be included on the Submittal Register (as discussed below). Unless directed otherwise by the Contracting Officer, the following administrative submittals shall be submitted to the Area or Resident (as directed) Office, for approval, via a Serial Letter: Quality Control Plans (Section 01451A CONTRACTOR QUALITY CONTROL), Accident Prevention Plans (Section 01400 SPECIAL SAFETY REQUIREMENTS, Environmental Protection Plans (Section 01355A ENVIRONMENTAL PROTECTION) and other submittals as directed by the Contracting Officer. Format for the Serial Letter shall be as directed by the Area or Resident Office.

1.4 APPROVED SUBMITTALS

The Contracting Officer's approval of submittals shall not be construed as a complete check, but will indicate only that the general method of construction, materials, detailing and other information are satisfactory. Approval will not relieve the Contractor of the responsibility for any error which may exist, as the Contractor under the Contractor Quality Control (CQC) requirements of this contract is responsible for dimensions, the design of adequate connections and details, and the satisfactory construction of all work. After submittals have been approved by the Contracting Officer, no resubmittal for the purpose of substituting materials or equipment will be considered unless accompanied by an explanation of why a substitution is necessary.

1.5 DISAPPROVED SUBMITTALS

The Contractor shall make all corrections required by the Contracting Officer and promptly furnish a corrected submittal in the form and number of copies specified for the initial submittal. If the Contractor considers any correction indicated on the submittals to constitute a change to the contract, a notice in accordance with the Contract Clause "Changes" shall be given promptly to the Contracting Officer.

1.6 WITHHOLDING OF PAYMENT

Payment for materials incorporated in the work will not be made if required approvals have not been obtained.

1.7 GENERAL

The Contractor shall make submittals as required by the specifications. The Contracting Officer may request submittals in addition to those specified when deemed necessary to adequately describe the work covered in the respective sections. Units of weights and measures used on all submittals shall be the same as those used in the contract drawings. Each submittal shall be complete and in sufficient detail to allow ready determination of compliance with contract requirements. Prior to submittal, all items shall be checked and approved by the Contractor's Quality Control (CQC) System Manager and each item shall be stamped, signed, and dated by the CQC System Manager indicating action taken. Proposed deviations from the contract requirements shall be clearly identified. Submittals shall include items such as: Contractor's, manufacturer's, or fabricator's drawings; descriptive literature including (but not limited to) catalog cuts, diagrams, operating charts or curves; test reports; test cylinders; samples; O&M manuals (including parts list); certifications; warranties; and other such required submittals. Submittals

requiring Government approval shall be scheduled and made prior to the acquisition of the material or equipment covered thereby. Samples remaining upon completion of the work shall be picked up and disposed of in accordance with manufacturer's Material Safety Data Sheets (MSDS) and in compliance with existing laws and regulations.

1.8 SUBMITTAL REGISTER AND ENG FORM 4288 (RMS) SUBMITTAL REGISTER

At the end of this section is a submittal register (submittal form) showing items of equipment and materials for which submittals are required by the specifications; this list may not be all inclusive and additional submittals may be required. The attached submittal register identifies only the submittal section, type of submittal, description of item submitted, paragraph number related to submittal item (section submittal paragraph if none listed), submittal classification (G), and submittal reviewer identifier (DO, AE or AO). Any submittal without a submittal classification and submittal reviewer identifier is considered to be For Information Only (FIO). The submittal register generated by the Government Resident Management System (RMS) Software is used for tracking construction submittals and is referred to as ENG Form 4288 (RMS). The Contractor shall maintain an ENG Form 4288 (RMS) for the project in accordance with the attached ENG Form 4288 (RMS) Instructions. The Contractor will be furnished one (1) set of ENG Forms 4288 (RMS) at the preconstruction conference. The Contractor shall complete the appropriate columns as indicated on the attached ENG Form 4288 (RMS) Instructions and return to the Contracting Officer for approval within 20 calendar days after the preconstruction conference. The ENG Form 4288 (RMS)will become a part of the contract after approval. The TRANSMITTAL NUMBER AND ITEM NUMBER shall be left blank for use later to record the respective transmittal and item number corresponding to those listed on the transmittal form entitled: "TRANSMITTAL OF SHOP DRAWINGS, EQUIPMENT DATA, MATERIAL SAMPLES, OR MANUFACTURER'S CERTIFICATES OF COMPLIANCE" (ENG Form 4025). The approved ENG Form 4288 (RMS) will become the scheduling document and will be used to control submittals throughout the life of the contract. The ENG Form 4288 (RMS) and the progress schedules shall be coordinated.

1.9 SCHEDULING

Submittals covering component items forming a system or items that are interrelated shall be scheduled to be coordinated and submitted concurrently. Certifications to be submitted with the pertinent drawings shall be so scheduled. Adequate time (a minimum of 20 calendar days exclusive of mailing time) shall be allowed and shown on the register for review and approval. No delay damages or time extensions will be allowed for time lost in late submittals.

1.10 TRANSMITTAL FORM (ENG FORM 4025)

The sample transmittal form (ENG Form 4025) attached to this section shall be used for submitting both Goverment approved and information only submittals in accordance with the instructions on the reverse side of the form. These forms will be furnished to the Contractor. This form shall be properly completed by filling out all the heading blank spaces and identifying each item submitted. Special care shall be exercised to ensure proper listing of the specification paragraph and/or sheet number of the contract drawings pertinent to the data submitted for each item.

1.11 SUBMITTAL PROCEDURES

Submittals shall be made as follows:

1.11.1 Procedures

1.11.1.1 "G-DO" or "G-AE" Submittals

All items listed as "G-DO" or "G-AE" submittals in the various sections or on the Submittal Register shall be mailed directly to the addressee shown below as directed. For each submittal, a completed information copy of the attached transmittal form shall also be mailed to the Area Engineer .

An additional copy of "G-D0", "G-AE" or "G-AO" submittals related to fire protection/detection systems shall be submitted concurrently to the Base Civil Engineering Office or DPW office. The mailing address for these submittals shall be obtained at the preconstruction conference.

Technical Reviewer

Architectural Alliance
400 Clifton Avenue South
Minneapolis, MN 55403

Each required submittal which is in the form of a drawing shall be submitted as seven (7) prints of the drawing. Drawing prints shall be either blue or black line permanent-type prints on a white background or blueprint and shall be sufficiently clear and suitable for making legible copies.

All catalog and descriptive data shall be submitted in seven (7) copies. Catalog cuts and other descriptive data which have more than one model, size, or type or which shows optional equipment shall be clearly marked to show the model, size, or type and all optional equipment which is proposed for approval. Submittals on component items forming a system or that are interrelated shall be submitted at one time as a single submittal in order to demonstrate that the items have been properly coordinated and will function as a unit.

1.11.1.2 "G-AO" and FIO Submittals

Except as noted below, data for all items listed as "G-AO" Submittals in the various sections shall be submitted in five (5) copies to the Area Engineer using the transmittal form. Items not to be submitted in multiples, such as samples and test cylinders, shall be submitted to the Area or Resident Engineer (as directed) accompanied by five (5) copies of the transmittal form.

Except as noted below, data for all items listed as FIO Submittals in the various sections shall be submitted in three (3) copies to the Area Engineer using the transmittal form. Items not to be submitted in multiples, such as samples and test cylinders, shall be submitted to the Area or Resident Engineer (as directed) accompanied by three (3) copies of the transmittal form. The Government has the option to review any FIO submittal.

1.11.1.3 Certificates of Compliance

Each certificate shall be signed by an official authorized to certify in behalf of the manufacturing company and shall contain the name and address of the Contractor, the project name and location, and the quantity and date or dates of shipment or delivery to which the certificates apply. Copies

of laboratory test reports submitted with certificates shall contain the name and address of the testing laboratory and the date or dates of the tests to which the report applies. Certification shall not be construed as relieving the Contractor from furnishing satisfactory material, if, after tests are performed on selected samples, the material is found not to meet the specific requirements.

1.11.1.4 Purchase Orders

Copies of purchase orders shall be furnished to the Contracting Officer when the Contractor requests assistance for expediting deliveries of equipment or materials, or when requested by the Contracting Officer for the purpose of quality assurance review. Each purchase order issued by the Contractor or his subcontractors for materials and equipment to be incorporated into the project shall (1) be clearly identified with the applicable DA contract number, (2) carry an identifying number, (3) be in sufficient detail to identify the material being purchased, (4) indicate a definite delivery date, and (5) display the DMS priority rating, if applicable.

1.11.1.5 Operation and Maintenance Instructions and/or Manuals

Where required by various technical sections, operations and maintenance instructions and/or manuals with parts lists included shall be provided by the Contractor in quintuplicate, unless otherwise specified, and shall be assembled in three-ring binders with index and tabbed section divider and having a cover indicating the contents by equipment or system name and project title and shall be submitted for approval to the Contracting Officer 90 days prior to final tests of mechanical and electrical systems, unless otherwise specified. Each operation and maintenance manual shall contain a copy of all warranties and a list of local service representatives required by Section 01200 Warranty of Construction. If field testing requires these copies to be revised, they shall be updated and resubmitted for approval within 10 calendar days after completion of tests. The Operations and Maintenance Instructions and/or Manuals shall be shown as a separate activity on the Contractor prepared construction schedule bar chart or network analysis system.

1.11.1.6 Interior/Exterior Finish Sample and Data

All submittals regarding color boards (Section 09915 COLOR SCHEDULE) for interior finish samples and data shall be submitted concurrently and all submittals for exterior finish samples and data shall be submitted concurrently. These color boards are in addition to the samples required under the specfic technical specifications listed as "samples".

1.11.2 Deviations

For submittals which include proposed deviations requested by the Contractor, the column "variation" of ENG Form 4025 shall be checked. The Contractor shall set forth in writing the reason for any deviations and annotate such deviations on the submittal. The Government reserves the right to rescind inadvertent approval of submittals containing unnoted deviations.

1.12 CONTROL OF SUBMITTALS

The Contractor shall carefully control his procurement operations to ensure

that each individual submittal is made on or before the Contractor scheduled submittal date shown on the approved "Submittal Register."

1.13 FINAL COPY OF GOVERNMENT APPROVED SUBMITTALS

Upon completion of review of submittals requiring Government approval, the submittals will be identified as having received approval by being so stamped and dated.

1.13.1 "G-AE" or "G-DO" Submittals

The drawing print and five (5) sets of all catalog data and descriptive literature and drawing prints will be retained by the Contracting Officer and two (2) sets of catalog data and descriptive literature and drawing prints will be returned to the Contractor.

1.13.2 "G-AO" Submittals

Two (2) copies of "G-AO" submittals for approval will be returned to the Contractor except for samples, test cylinders, and O&M manuals for which two (2) copies of the transmittal form only will be returned to the Contractor.

1.14 INFORMATION ONLY SUBMITTALS

Normally submittals for information only will not be returned. Review by the Contracting Officer is not required on information only submittals. The Government reserves the right to require the Contractor to resubmit any item found not to comply with the contract. This does not relieve the Contractor from the obligation to furnish material conforming to the plans and specifications; will not prevent the Contracting Officer from requiring removal and replacement of nonconforming material incorporated in the work; and does not relieve the Contractor of the requirement to furnish samples for testing by the Government laboratory or for check testing by the Government in those instances where the technical specifications so prescribe.

1.15 STAMPS

Stamps used by the Contractor on the submittal data to certify that the submittal meets contract requirements shall be similar to the following. The stamp shall be affixed and filled out on the back of each ENG Form 4025.

CONTRACTOR

(Firm Name)

_____ Approved

_____ Approved with corrections as noted on submittal data and/or attached sheets(s).

SIGNATURE: _____

TITLE: _____

DATE: _____

INSTRUCTIONS
ENG FORM 4288 (RMS)

1. The Contractor shall utilize the ENG Form 4288 (RMS) generated by the Government Residential Management System (RMS)software for tracking construction submittals. The Submittal Register information, columns (c) thru (f) from the Submittal Forms furnished with this solicitation, will be utilized by the Government to generate the ENG Form 4288 (RMS). The Government will furnish the Contractor a hard copy of the ENG Form 4288 (RMS) at the preconstruction conference. . The ENG Form 4288 (RMS) includes the following items and parties responsible for completing the information required on the ENG Form 4288 (RMS). The subparagraph headings below do not correspond to the Submittal Register column headings.

a. Activity Number: will be provided by the Contractor from his Network Analysis, if required, and when a network analysis is accepted.

b. Transmittal Number and Item Number: will be provided by the Contractor from ENG Form 4025 for each item.

c. Specification Paragraph Number: will be provided by the Government from the Submittal Register from column entitled "Specification Paragraph Number".

d. Description of Submittal: will be provided by the Government from the Submittal Register from column entitled "Description of Item Submitted".

e. Type of Submittal: will be provided by the Government from the Submittal Register from column entitled "Type of Submittal" or "Description of Item Submitted".

f. Classification: will be provided by the Government from the Submittal Register from column entitled "Classification".

g. Reviewing Office - Reviewer: will be provided by the Government from the Submittal Register from column entitled "Classification" or "Reviewer".

h. Contractor Schedule Dates: the Contractor will provide schedule dates for

"Submit Needed By" (Date the Contractor expects to submit an item. It is the Contractors responsibility to calculate the lead time needed for the government approval. Note if resubmittal is required it is the Contractors responsibility to make all adjustments necessary to meet the contract completion date.)

"Approval Needed By" (date the Contractor can receive approval and still obtain the material by need date.), and

"Material Needed By" (date that the material is needed at the site. If there is a network analysis it should reflect that date on the analysis.)

i. Contractor Action: Includes the following items: "Code" and "Submit to the Corps". These items will be completed by the Contractor. The action codes will be one of the following:

A - Approved as submitted.

B - Approved, except as noted.
G - Other (specify)

j. Government Action: This item includes a Government Action "Code" and "Date" and is reserved for Government use. The Government reserves the right to review any submittal for contract compliance. Receipt of an Action Code "F - Receipt Acknowledged" or failure of the Contractor to receive an Action Code by the Government, does not mean that the submittal is in compliance with the contract requirements. When used by the Government, the action code will be one of the following:

A - Approved as submitted.
B - Approved except as noted on drawings.
C - Approved, except as noted on drawings. Refer to attached ____ sheet resubmission required.
D - Will be returned by separate correspondence.
E - Disapproved (See Attached).
F - Receipt Acknowledged.
Fx - Receipt acknowledged, does not comply as noted with contract requirements.
G - Other (specify).

2. Reviewer Abbreviation code will be as follows;

G-DO, G-AE or G-AO - Government Approved
For Information Only - Any submittal without a Government Approved abbreviation code.

INSTRUCTIONS
ENG FORM 4025

1. DATE at the top of form will be the date submitted to the Government which is to be completed by the Contractor.

2. TRANSMITTAL NO. Each new transmittal (i.e. G-AE, G-DO, G-AO or FIO) shall be numbered consecutively for each specification section in the space provided in "Transmittal No.". This number will be the identifying symbol for each submittal. Example: "15400A-001", "15895A-001" "15895A-002", "16415A-001", etc. For each new submittal or for a resubmittal, the appropriate box must be marked. Resubmittals must be designated by their original sequential number followed by an ".1", ".2", etc. for each sequential resubmittal. Example: "15895A-001.1" (previous submittal No. 15895A-001).

3. TO: Box will contain the name and address of the office which will review the submittal (as designated by the Contracting Officer).

4. FROM: Box will be the name and address of the Contractor. Contractor is to complete this box.

5. CONTRACT NO. box will contain the Contractors construction contract number (e.g., DACXXX-XX-C-XXXX).

6. CHECK ONE box

a. CHECK ONE box (for transmittal/ retransmittal) will be completed by the Contractor with one box marked. If a resubmittal is provided last transmittal number will be added.

b. CHECK ONE box will be completed by the Contractor with one box marked for the submittal type.

7. SPECIFICATION SECTION NO. box will be completed by the Contractor. The number will be the five digit number found in the specifications. No more than one section will be covered with each transmittal.

8. PROJECT TITLE AND LOCATION box will be completed by the Contractor.

9. Column a, will be completed by the Contractor and will contain a different number for each item submitted in that transmittal. Once a number is assigned to an item it will remain the same even if there is a resubmittal.

10. Column b, will be completed by the Contractor. The description of each item on this form will be the descriptions provided on the submittal register. The Contractor shall submit each submittal register item all at once on one transmittal if possible. If a submittal register item can not be submitted all at once Contractor should note that in the remarks box.

11. Column c, will be completed by the Contractor. The information will be the appropriate submittal description number as described this Section or shown on the submittal register (e.g. SD-XX).

12. Column d, will be completed by the Contractor. The number of copies will be determined by the Contractor after review of submittal register for the classification of the item and after review of paragraph: SUBMITTAL

PROCEDURES of this Section.

13. Column e, will be completed by the Contractor. The Contractor shall state all applicable paragraph numbers.

14. Column f, will be completed by the Contractor. The Contractor shall state all applicable drawing sheet numbers.

15. Column g, will be completed by the Contractor. The action codes will be one of the following:

A - Approved as submitted.
B - Approved, except as noted.
G - Other (specify)

16. Column h, will be completely by the Contractor. A check shall be placed in this column when a submittal is not in accordance with the plans and specifications also, a written statement to that effect shall be included in the space provided for "Remarks".

17. Column i, is reserved for Government use and may or may not be provided. When used by the Government, the action code will be one of the following:

A - Approved as submitted.
B - Approved except as noted on drawings.
C - Approved, except as noted on drawings. Refer to attached ____ sheet resubmission required.
D - Will be returned by separate correspondence.
E - Disapproved (See Attached).
F - Receipt Acknowledged.
Fx - Receipt acknowledged, does not comply as noted with contract requirements.
G - Other (specify).

18. REMARKS box self explained.

19. Contractor Quality Control Manager must provide name and sign all Eng Form 4025 certifying conformance. In the space for the name and signature, also include a phone number where the CQC Manager may be reached.

20. Section II will be completed by the Government. Contractor is not to write in this space.

See reverse side of ENG Form 4025 for additional instructions.

-- End of Section --

SUBMITTAL REGISTER

CONTRACT NO.

TITLE AND LOCATION
Consolidated Lodging Facility, Phase IV, Minneapolis-St Paul IAP

CONTRACTOR

ACTIVITY NO	TRANSMITTAL NO	SPEC SECT	DESCRIPTION ITEM SUBMITTED	PARAGRAPH #	CLASSIFICATION	GOVT OR A/E REVWR	CONTRACTOR: SCHEDULE DATES			CONTRACTOR ACTION			APPROVING AUTHORITY					
							SUBMIT	APPROVAL NEEDED BY	MATERIAL NEEDED BY	ACTION CODE	DATE OF ACTION	DATE FWD TO APPR AUTH/ DATE RCD FROM CONTR	DATE FWD TO OTHER REVIEWER	DATE RCD FROM OTH REVIEWER	ACTION CODE	DATE OF ACTION	MAILED TO CONTR/ DATE RCD FRM APPR AUTH	REMARKS
(a)	(b)	(c)	(d)	(e)	(f)		(g)	(h)	(i)	(j)	(k)	(l)	(m)	(n)	(o)	(p)	(q)	(r)
		00800	SD-02 Shop Drawings															
			Equipment Room Drawings	1.28	G AO													
		01200	SD-11 Closeout Submittals															
			Equipment Warranty Booklet	1.2.5														
		01400	SD-06 Test Reports															
			Exposure Assessment and Air		G AO													
			Monitoring															
			SD-07 Certificates															
			Qualifications		G AO													
			Training Program															
			Medical Requirements															
		02220	SD-03 Product Data															
			Work Plan		G AO													
		02230	SD-03 Product Data															
			Materials other than Salable		G AO													
			Timber															
		02300	SD-03 Product Data															
			Earthwork		G AO													
			SD-06 Test Reports															
			Testing	3.12	G AO													
			SD-07 Certificates															
			Testing	3.12	G AO													
		02315	SD-06 Test Reports															
			Field Density Tests		G AO													
			Testing of Backfill Materials		G AO													
		02316	SD-06 Test Reports															

SUBMITTAL REGISTER

CONTRACT NO.

TITLE AND LOCATION
Consolidated Lodging Facility, Phase IV, Minneapolis-St Paul IAP

CONTRACTOR

ACTIVITY NO	TRANSMITTAL NO	SPEC SECT	DESCRIPTION ITEM SUBMITTED	PARAGRAPH #	CLASSIFICATION	GOVT OR A/E REVWR	CONTRACTOR: SCHEDULE DATES			CONTRACTOR ACTION			APPROVING AUTHORITY					
							SUBMIT	APPROVAL NEEDED BY	MATERIAL NEEDED BY	ACTION CODE	DATE OF ACTION	DATE FWD TO APPR AUTH/ DATE RCD FROM CONTR	DATE FWD TO OTHER REVIEWER	DATE RCD FROM OTH REVIEWER	ACTION CODE	DATE OF ACTION	MAILED TO CONTR/ DATE RCD FRM APPR AUTH	REMARKS
(a)	(b)	(c)	(d)	(e)	(f)		(g)	(h)	(i)	(j)	(k)	(l)	(m)	(n)	(o)	(p)	(q)	(r)
		02316	Field Density Tests	3.4.3	G	AO												
			Testing and Backfill Materials		G	AO												
		02531	SD-07 Certificates															
			Portland Cement		G	AO												
			Joints	2.3	G	AO												
		02722	SD-03 Product Data															
			Plant, Equipment, and Tools	1.6														
			SD-06 Test Reports															
			Sampling and testing	1.4	G	AO												
			Field Density Tests	1.4.2.4	G	AO												
		02748	SD-03 Product Data															
			Waybills and Delivery Tickets															
			SD-06 Test Reports															
			Samling and Testing															
		02763	SD-03 Product Data															
			Equipment	1.4	G	AO												
			Composition Requirements		G	AO												
			SD-06 Test Reports															
			Sampling and Testing		G	AO												
			SD-07 Certificates															
			Volatile Organic Compound	2.2.3														
			(VOC)															
		02770	SD-03 Product Data															
			Concrete;	2.1	G	AO												
			SD-06 Test Reports															
			Field Quality Control;	3.8	G	AO												

SUBMITTAL REGISTER

CONTRACT NO.

TITLE AND LOCATION
Consolidated Lodging Facility, Phase IV, Minneapolis-St Paul IAP

CONTRACTOR

ACTIVITY NO	TRANSMITTAL NO	SPEC SECT	DESCRIPTION ITEM SUBMITTED	PARAGRAPH #	CLASSIFICATION	GOVT OR A/E REVWR	CONTRACTOR: SCHEDULE DATES			CONTRACTOR ACTION			APPROVING AUTHORITY					
							SUBMIT	APPROVAL NEEDED BY	MATERIAL NEEDED BY	ACTION CODE	DATE OF ACTION	DATE FWD TO APPR AUTH/ DATE RCD FROM CONTR	DATE FWD TO OTHER REVIEWER	DATE RCD FROM OTH REVIEWER	ACTION CODE	DATE OF ACTION	MAILED TO CONTR/ DATE RCD FRM APPR AUTH	REMARKS
(a)	(b)	(c)	(d)	(e)	(f)		(g)	(h)	(i)	(j)	(k)	(l)	(m)	(n)	(o)	(p)	(q)	(r)
		02811	SD-02 Shop Drawings															
			Sprinkler System		G	AE												
			SD-03 Product Data															
			Framed Instructions	3.3														
			Field Training	3.4														
			Design Analysis and Calculations		G	AO												
			Spare Parts															
			SD-06 Test Reports															
			Field Tests	3.2														
			SD-07 Certificates															
			Sprinkler System															
			SD-10 Operation and Maintenance															
			Data															
			Sprinkler System															
		02821	SD-02 Shop Drawings															
			Gate															
			GA1															
			SD-03 Product Data															
			GAte															
			GA1															
		02921	SD-03 Product Data															
			Equipment															
			Surface Erosion Control Material	2.8														
			Chemical Treatment Material															
			Delivery	1.4.1														
			Finished Grade and Topsoil	3.2.1														

SUBMITTAL REGISTER

CONTRACT NO.

TITLE AND LOCATION
Consolidated Lodging Facility, Phase IV, Minneapolis-St Paul IAP

CONTRACTOR

ACTIVITY NO	TRANSMITTAL NO	SPEC SECT	DESCRIPTION ITEM SUBMITTED	PARAGRAPH #	CLASSIFICATION	GOVT OR A/E REVWR	CONTRACTOR: SCHEDULE DATES			CONTRACTOR ACTION			APPROVING AUTHORITY					
							SUBMIT	APPROVAL NEEDED BY	MATERIAL NEEDED BY	ACTION CODE	DATE OF ACTION	DATE FWD TO APPR AUTH/ DATE RCD FROM CONTR	DATE FWD TO OTHER REVIEWER	DATE RCD FROM OTH REVIEWER	ACTION CODE	DATE OF ACTION	MAILED TO CONTR/ DATE RCD FRM APPR AUTH	REMARKS
(a)	(b)	(c)	(d)	(e)	(f)		(g)	(h)	(i)	(j)	(k)	(l)	(m)	(n)	(o)	(p)	(q)	(r)
		02921	Topsoil	2.2														
			Quantity Check	3.5														
			Seed Establishment Period	3.9														
			Maintenance Record	3.9.3.5	G	AO												
			Application of Pesticide	3.6	G	AO												
			SD-04 Samples															
			Mulch	2.4														
			SD-06 Test Reports															
			Soil Test	3.1.4														
			FIO															
			SD-07 Certificates															
			Seed	2.1														
			Topsoil	2.2														
			pH Adjuster	2.3.1														
			Fertilizer	2.3.2														
			Organic Material	2.3.4														
			Soil Conditioner	2.3.5														
			Mulch	2.4														
		02922	SD-03 Product Data															
			Finished Grade and Topsoil	3.2.1														
			Topsoil	2.2														
			Quantity Check	3.5														
			Sod Establishment Period	3.9														
			Maintenance Record	3.9.3.5														
			Application of Pesticide	3.6														
			SD-06 Test Reports															

SUBMITTAL REGISTER

CONTRACT NO.

TITLE AND LOCATION
Consolidated Lodging Facility, Phase IV, Minneapolis-St Paul IAP

CONTRACTOR

ACTIVITY NO	TRANSMITTAL NO	SPEC SECT	DESCRIPTION ITEM SUBMITTED	PARAGRAPH #	CLASSIFICATION	GOVT OR A/E REVWR	CONTRACTOR: SCHEDULE DATES			CONTRACTOR ACTION			APPROVING AUTHORITY					
							SUBMIT	APPROVAL NEEDED BY	MATERIAL NEEDED BY	ACTION CODE	DATE OF ACTION	DATE FWD TO APPR AUTH/ DATE RCD FROM CONTR	DATE FWD TO OTHER REVIEWER	DATE RCD FROM OTH REVIEWER	ACTION CODE	DATE OF ACTION	MAILED TO CONTR/ DATE RCD FRM APPR AUTH	REMARKS
(a)	(b)	(c)	(d)	(e)	(f)		(g)	(h)	(i)	(j)	(k)	(l)	(m)	(n)	(o)	(p)	(q)	(r)
		02922	Soil Test		G AO													
			SD-07 Certificates															
			Sod	2.1														
			Topsoil	2.2														
			pH Adjuster	2.3.1														
			Fertilizer	2.3.2														
			Organic Material	2.3.4														
			Soil Conditioner	2.3.5														
			Pesticide	2.5														
		02930	SD-02 Shop Drawings															
			Finished Grade, Topsoil and	3.2.1														
			Underground Utilities															
			SD-03 Product Data															
			Geotextile	2.5	G AO													
			Chemical Treatment Material															
			Equipment															
			Delivery	1.4.1														
			Plant Establishment Period	3.9														
			Maintenance Record	3.9.2.6	G AO													
			Application of Pesticide	3.7														
			SD-06 Test Reports															
			Soil Test		G AO													
			Percolation Test	3.1.4.1	G AO													
			SD-07 Certificates															
			Plant Material	2.1														
			Topsoil	2.2														

SUBMITTAL REGISTER

CONTRACT NO.

TITLE AND LOCATION
Consolidated Lodging Facility, Phase IV, Minneapolis-St Paul IAP

CONTRACTOR

ACTIVITY NO	TRANSMITTAL NO	SPEC SECT	DESCRIPTION ITEM SUBMITTED	PARAGRAPH #	CLASSIFICATION	GOVT OR A/E REVWR	CONTRACTOR: SCHEDULE DATES			CONTRACTOR ACTION			APPROVING AUTHORITY					
							SUBMIT	APPROVAL NEEDED BY	MATERIAL NEEDED BY	ACTION CODE	DATE OF ACTION	DATE FWD TO APPR AUTH/ DATE RCD FROM CONTR	DATE FWD TO OTHER REVIEWER	DATE RCD FROM OTH REVIEWER	ACTION CODE	DATE OF ACTION	MAILED TO CONTR/ DATE RCD FRM APPR AUTH	REMARKS
(a)	(b)	(c)	(d)	(e)	(f)		(g)	(h)	(i)	(j)	(k)	(l)	(m)	(n)	(o)	(p)	(q)	(r)
		02930	pH Adjuster	2.3.1														
			Fertilizer	2.3.2														
			Organic Material	2.3.3														
			Soil Conditioner	2.3.4														
			Organic Mulch	2.4.2														
			Pesticide	2.14														
			SD-10 Operation and Maintenance															
			Data															
			Maintenance Instructions	3.9.5														
		03200	SD-02 Shop Drawings															
			Concrete Reinforcement System		G	AE												
		03300	SD-08 Manufacturer's Instructions															
			Mixture Proportions	1.9														
			GA1															
			SD-09 Manufacturer's Field															
			Reports															
			Testing and Inspection for	3.17														
			Contractor Quality Control															
			FIO															
		03410	SD-02 Shop Drawings															
			Floor and Roof Units		G	AE												
			SD-03 Product Data															
			Floor and Roof Units															
		03413	SD-02 Shop Drawings															
			Architectural Concrete System		G	AE												
			SD-03 Product Data															

SUBMITTAL REGISTER

CONTRACT NO.

TITLE AND LOCATION
Consolidated Lodging Facility, Phase IV, Minneapolis-St Paul IAP

CONTRACTOR

ACTIVITY NO	TRANSMITTAL NO	SPEC SECT	DESCRIPTION ITEM SUBMITTED	PARAGRAPH #	CLASSIFICATION	GOVT OR A/E REVWR	CONTRACTOR: SCHEDULE DATES			CONTRACTOR ACTION			APPROVING AUTHORITY					
							SUBMIT	APPROVAL NEEDED BY	MATERIAL NEEDED BY	ACTION CODE	DATE OF ACTION	DATE FWD TO APPR AUTH/ DATE RCD FROM CONTR	DATE FWD TO OTHER REVIEWER	DATE RCD FROM OTH REVIEWER	ACTION CODE	DATE OF ACTION	MAILED TO CONTR/ DATE RCD FRM APPR AUTH	REMARKS
(a)	(b)	(c)	(d)	(e)	(f)		(g)	(h)	(i)	(j)	(k)	(l)	(m)	(n)	(o)	(p)	(q)	(r)
		03413	Calculations	1.3.5														
			Mix Design															
			Manufacturer's Qualifications															
			SD-04 Samples															
			Precast Concrete Units	2.2	G	AE												
		04200	SD-01 Preconstruction Submittals															
			Brick															
			GA															
			Insulation	2.17														
			FIO															
			SD-09 Manufacturer’s Field															
			Reports															
			Efflorescence Test	3.26.3														
			FIO															
			Field Testing of Mortar	3.26.1														
			Field Testing of Grout	3.26.2														
			Prism tests	3.26.4														
			Masonry Cement															
			Fire-rated CMU	2.4.3														
			Special Inspection	1.5														
			GA															
			Brick															
			FI0															
			Concrete Brick	2.3														
			FIO															
			Concrete Masonry Units (CMU)	2.4														

SUBMITTAL REGISTER

CONTRACT NO.

TITLE AND LOCATION
Consolidated Lodging Facility, Phase IV, Minneapolis-St Paul IAP

CONTRACTOR

ACTIVITY NO	TRANSMITTAL NO	SPEC SECT	DESCRIPTION ITEM SUBMITTED	PARAGRAPH #	CLASSIFICATION	GOVT OR A/E REVWR	CONTRACTOR: SCHEDULE DATES			CONTRACTOR ACTION			APPROVING AUTHORITY					MAILED TO CONTR/ DATE RCD FRM APPR AUTH	REMARKS
							SUBMIT	APPROVAL NEEDED BY	MATERIAL NEEDED BY	ACTION CODE	DATE OF ACTION	DATE FWD TO APPR AUTH/ DATE RCD FROM CONTR	DATE FWD TO OTHER REVIEWER	DATE RCD FROM OTH REVIEWER	ACTION CODE	DATE OF ACTION			
(a)	(b)	(c)	(d)	(e)	(f)		(g)	(h)	(i)	(j)	(k)	(l)	(m)	(n)	(o)	(p)	(q)	(r)
		04200	Control Joint Keys	2.15															
			Anchors, Ties, and Bar	2.12															
			Positioners																
			Expansion-Joint Materials	2.16															
			Joint Reinforcement	2.13															
			Reinforcing Steel Bars and Rods	2.14															
			Masonry Cement																
			Mortar Coloring																
			Insulation	2.17															
			Insulation	2.17															
			Mortar Admixtures																
			Grout Admixtures																
			Clay or Shale Brick	2.2															
			GA1																
		04220	SD-01 Preconstruction Submittals																
			Masonry Veneer/Steel Stud Wall																
			System:																
			Refer to requirements of 05400																
			COLD-FORMED STEEL																
			FRAMING.																
			SD-04 Samples																
			Masonry Veneer/Steel Stud Wall																
			System																
			Refer to requirements of 05400																
			COLD-FORMED STEEL																
			FRAMING.																

SUBMITTAL REGISTER

CONTRACT NO.

TITLE AND LOCATION
Consolidated Lodging Facility, Phase IV, Minneapolis-St Paul IAP

CONTRACTOR

ACTIVITY NO	TRANSMITTAL NO	SPEC SECT	DESCRIPTION ITEM SUBMITTED	PARAGRAPH #	CLASSIFICATION	GOVT OR A/E REVWR	CONTRACTOR: SCHEDULE DATES			CONTRACTOR ACTION			APPROVING AUTHORITY					
							SUBMIT	APPROVAL NEEDED BY	MATERIAL NEEDED BY	ACTION CODE	DATE OF ACTION	DATE FWD TO APPR AUTH/ DATE RCD FROM CONTR	DATE FWD TO OTHER REVIEWER	DATE RCD FROM OTH REVIEWER	ACTION CODE	DATE OF ACTION	MAILED TO CONTR/ DATE RCD FRM APPR AUTH	REMARKS
(a)	(b)	(c)	(d)	(e)	(f)		(g)	(h)	(i)	(j)	(k)	(l)	(m)	(n)	(o)	(p)	(q)	(r)
		04220	Brick															
			FIO															
			Insulation															
			Exterior Sheathing															
			Moisture Barrier															
			Vapor Barrier															
			Veneer Anchors															
			FIO.															
		05120	SD-02 Shop Drawings															
			Structural Steel System		G	AE												
			Structural Connections	3.2.1	G	AE												
		05400	SD-03 Product Data															
			Calculations		G	AE												
			SD-02 Shop Drawings															
			Cold-Formed Steel Framing		G	AE												
		05500	SD-02 Shop Drawings															
			Miscellaneous Metal Items		G	AE												
		06100	SD-07 Certificates															
			Grading and Marking	2.1.1														
		06200	SD-03 Product Data															
			Specialty Items		G	AE												
			Wood Items and Trim	2.1	G	AE												
			SD-04 Samples															
			Finish Carpentry		G	AE												
			Wood Trim		G	AE												
			Plastic Laminate		G	AE												

SUBMITTAL REGISTER

CONTRACT NO.

TITLE AND LOCATION
Consolidated Lodging Facility, Phase IV, Minneapolis-St Paul IAP

CONTRACTOR

ACTIVITY NO	TRANSMITTAL NO	SPEC SECT	DESCRIPTION ITEM SUBMITTED	PARAGRAPH #	CLASSIFICATION	GOVT OR A/E REVWR	CONTRACTOR: SCHEDULE DATES			CONTRACTOR ACTION			APPROVING AUTHORITY					MAILED TO CONTR/ DATE RCD FRM APPR AUTH	REMARKS
							SUBMIT	APPROVAL NEEDED BY	MATERIAL NEEDED BY	ACTION CODE	DATE OF ACTION	DATE FWD TO APPR AUTH/ DATE RCD FROM CONTR	DATE FWD TO OTHER REVIEWER	DATE RCD FROM OTH REVIEWER	ACTION CODE	DATE OF ACTION		
(a)	(b)	(c)	(d)	(e)	(f)		(g)	(h)	(i)	(j)	(k)	(l)	(m)	(n)	(o)	(p)	(q)	(r)
		07110	SD-07 Certificates															
			Materials															
		07220	SD-07 Certificates															
			Insulation	2.2														
			Vapor Retarder															
			SD-08 Manufacturer's Instructions															
			Application of Insulation	3.7														
			Inspection															
		07413	SD-02 Shop Drawings															
			Siding	2.1	G	AE												
			SD-04 Samples															
			Siding	2.1	G	AE												
			Fasteners	2.4														
			Sealant	2.8														
			SD-07 Certificates															
			Siding	2.1														
			Installation	3.1														
			Accessories	2.3														
		07421	SD-02 Shop Drawings															
			Panel System		G	AE												
			SD-03 Product Data															
			Calculations															
			SD-04 Samples															
			Panel		G	AE												
			Sealant	2.9														
			SD-07 Certificates															

SUBMITTAL REGISTER

CONTRACT NO.

TITLE AND LOCATION
Consolidated Lodging Facility, Phase IV, Minneapolis-St Paul IAP

CONTRACTOR

ACTIVITY NO	TRANSMITTAL NO	SPEC SECT	DESCRIPTION ITEM SUBMITTED	PARAGRAPH #	CLASSIFICATION	GOVT OR A/E REVWR	CONTRACTOR: SCHEDULE DATES			CONTRACTOR ACTION			APPROVING AUTHORITY					MAILED TO CONTR/ DATE RCD FRM APPR AUTH	REMARKS
							SUBMIT	APPROVAL NEEDED BY	MATERIAL NEEDED BY	ACTION CODE	DATE OF ACTION	DATE FWD TO APPR AUTH/ DATE RCD FROM CONTR	DATE FWD TO OTHER REVIEWER	DATE RCD FROM OTH REVIEWER	ACTION CODE	DATE OF ACTION		
(a)	(b)	(c)	(d)	(e)	(f)		(g)	(h)	(i)	(j)	(k)	(l)	(m)	(n)	(o)	(p)	(q)	(r)
		07421	Panel															
			Installation	3.1														
			Accessories	2.4														
		07530	SD-02 Shop Drawings															
			Roofing System		G	AO												
			SD-03 Product Data															
			Installation															
			Inspection															
			SD-07 Certificates															
			Materials															
		07600	SD-02 Shop Drawings															
			Materials	2.1	G	AO												
		07810	SD-03 Product Data															
			Fireproofing Material		G	AO												
			SD-04 Samples															
			Spray-Applied Fireproofing		G	AO												
			SD-06 Test Reports															
			UL Test Assembly															
			SD-07 Certificates															
			Installer Qualifications	1.5														
			Manufacturer's Inspection															
		07840	SD-02 Shop Drawings															
			Firestopping Materials	2.1	G	AO												
			SD-07 Certificates															
			Firestopping Materials	2.1														
		07900	SD-03 Product Data															

SUBMITTAL REGISTER

CONTRACT NO.

TITLE AND LOCATION
Consolidated Lodging Facility, Phase IV, Minneapolis-St Paul IAP

CONTRACTOR

ACTIVITY NO	TRANSMITTAL NO	SPEC SECT	DESCRIPTION ITEM SUBMITTED	PARAGRAPH #	CLASSIFICATION	GOVT OR A/E REVWR	CONTRACTOR: SCHEDULE DATES			CONTRACTOR ACTION			APPROVING AUTHORITY					
							SUBMIT	APPROVAL NEEDED BY	MATERIAL NEEDED BY	ACTION CODE	DATE OF ACTION	DATE FWD TO APPR AUTH/ DATE RCD FROM CONTR	DATE FWD TO OTHER REVIEWER	DATE RCD FROM OTH REVIEWER	ACTION CODE	DATE OF ACTION	MAILED TO CONTR/ DATE RCD FRM APPR AUTH	REMARKS
(a)	(b)	(c)	(d)	(e)	(f)		(g)	(h)	(i)	(j)	(k)	(l)	(m)	(n)	(o)	(p)	(q)	(r)
		07900	Sealant	2.5														
			SD-07 Certificates															
			Sealant	2.5														
		08110	SD-02 Shop Drawings															
			Steel Doors and Frames		G AE													
			SD-06 Test Reports															
			Fire Rated Doors	2.2														
		08120	SD-02 Shop Drawings															
			Aluminum Frames and Doors		G AO													
			SD-03 Product Data															
			Aluminum Frames and Doors															
			SD-04 Samples															
			Finishes	2.1.1	G AE													
			SD-06 Test Reports															
			Aluminum Doors															
			SD-07 Certificates															
			Installer Qualifications															
			SD-08 Manufacturer's Instructions															
			Installation	3.1.2														
			Cleaning															
		08210	SD-02 Shop Drawings															
			Wood Doors		G AE													
			SD-04 Samples															
			Factory Stained and Coated		G AE													
			Finish															
		08520	SD-02 Shop Drawings															

SUBMITTAL REGISTER

CONTRACT NO.

TITLE AND LOCATION
Consolidated Lodging Facility, Phase IV, Minneapolis-St Paul IAP

CONTRACTOR

ACTIVITY NO	TRANSMITTAL NO	SPEC SECT	DESCRIPTION ITEM SUBMITTED	PARAGRAPH #	CLASSIFICATION	GOVT OR A/E REVWR	CONTRACTOR: SCHEDULE DATES			CONTRACTOR ACTION			APPROVING AUTHORITY					
							SUBMIT	APPROVAL NEEDED BY	MATERIAL NEEDED BY	ACTION CODE	DATE OF ACTION	DATE FWD TO APPR AUTH/ DATE RCD FROM CONTR	DATE FWD TO OTHER REVIEWER	DATE RCD FROM OTH REVIEWER	ACTION CODE	DATE OF ACTION	MAILED TO CONTR/ DATE RCD FRM APPR AUTH	REMARKS
(a)	(b)	(c)	(d)	(e)	(f)		(g)	(h)	(i)	(j)	(k)	(l)	(m)	(n)	(o)	(p)	(q)	(r)
		08520	Aluminum Windows		G	AE												
			Insect Screens	2.3	G	AE												
			SD-03 Product Data															
			Aluminum Windows															
			SD-04 Samples															
			Aluminum Windows		G	AE												
			SD-06 Test Reports															
			Aluminum Windows															
			SD-07 Certificates															
			Aluminum Windows															
			SD-08 Manufacturer's Instructions															
			Aluminum Windows															
		08700	SD-02 Shop Drawings															
			Hardware Devices		G	AO												
			SD-03 Product Data															
			Hardware and Accessories															
			Hardware Schedule		G	AE												
			Keying Schedule		G	AO												
			SD-07 Certificates															
			Hardware and Accessories															
		08810	SD-02 Shop Drawings															
			Glazing Materials and															
			Accessories															
			SD-03 Product Data															
			Glass															
			SD-04 Samples															

SUBMITTAL REGISTER

CONTRACT NO.

TITLE AND LOCATION
Consolidated Lodging Facility, Phase IV, Minneapolis-St Paul IAP

CONTRACTOR

ACTIVITY NO	TRANSMITTAL NO	SPEC SECT	DESCRIPTION ITEM SUBMITTED	PARAGRAPH #	CLASSIFICATION	GOVT OR A/E REVWR	CONTRACTOR: SCHEDULE DATES			CONTRACTOR ACTION			APPROVING AUTHORITY					
							SUBMIT	APPROVAL NEEDED BY	MATERIAL NEEDED BY	ACTION CODE	DATE OF ACTION	DATE FWD TO APPR AUTH/ DATE RCD FROM CONTR	DATE FWD TO OTHER REVIEWER	DATE RCD FROM OTH REVIEWER	ACTION CODE	DATE OF ACTION	MAILED TO CONTR/ DATE RCD FRM APPR AUTH	REMARKS
(a)	(b)	(c)	(d)	(e)	(f)		(g)	(h)	(i)	(j)	(k)	(l)	(m)	(n)	(o)	(p)	(q)	(r)
		08810	Glass		G AE													
			SD-07 Certificates															
			Glass															
			Gypsum Wallboard															
			FIO															
			Water-Resistant Gypsum Board	2.3.3														
			Steel Framing															
			Fire-Rated Gypsum Board	2.3.2														
			Cementitious Backer Units															
			Mock-Up;															
			GA.															
		09310	SD-03 Product Data															
			Tile	2.1														
			Setting-Bed															
			Mortar, Grout, and Adhesive	2.4														
			SD-04 Samples															
			Tile	2.1	G AE													
			Accessories		G AE													
		09510	SD-03 Product Data															
			Acoustical Ceiling System															
			Spray Applied Acoustical															
			Treament															
			SD-04 Samples															
			Acoustical Units	2.1														
			FIO															

SUBMITTAL REGISTER

CONTRACT NO.

TITLE AND LOCATION
Consolidated Lodging Facility, Phase IV, Minneapolis-St Paul IAP

CONTRACTOR

ACTIVITY NO	TRANSMITTAL NO	SPEC SECT	DESCRIPTION ITEM SUBMITTED	PARAGRAPH #	CLASSIFICATION	GOVT OR A/E REVWR	CONTRACTOR: SCHEDULE DATES			CONTRACTOR ACTION			APPROVING AUTHORITY					
							SUBMIT	APPROVAL NEEDED BY	MATERIAL NEEDED BY	ACTION CODE	DATE OF ACTION	DATE FWD TO APPR AUTH/ DATE RCD FROM CONTR	DATE FWD TO OTHER REVIEWER	DATE RCD FROM OTH REVIEWER	ACTION CODE	DATE OF ACTION	MAILED TO CONTR/ DATE RCD FRM APPR AUTH	REMARKS
(a)	(b)	(c)	(d)	(e)	(f)		(g)	(h)	(i)	(j)	(k)	(l)	(m)	(n)	(o)	(p)	(q)	(r)
		09510	Spray Applied Acoustical															
			Treament															
		09650	SD-03 Product Data															
			Resilient Flooring and															
			Accessories															
			SD-06 Test Reports															
			Resilient Flooring and															
			Accessories															
			SD-04 Samples															
			Resilient Flooring and		G	AE												
			Accessories															
		09680	SD-02 Shop Drawings															
			Installation	3.4	G	AE												
			SD-03 Product Data															
			Carpet and Accessories															
			SD-04 Samples															
			Carpet and Accessories															
			SD-06 Test Reports															
			Carpet and Accessories															
			SD-10 Operation and Maintenance															
			Data															
			Carpet and Accessories															
		09900	SD-03 Product Data															
			Paint	2.1														
			SD-04 Samples															
			Paint	2.1	G	AE												

SUBMITTAL REGISTER

CONTRACT NO.

TITLE AND LOCATION
Consolidated Lodging Facility, Phase IV, Minneapolis-St Paul IAP

CONTRACTOR

ACTIVITY NO	TRANSMITTAL NO	SPEC SECT	DESCRIPTION ITEM SUBMITTED	PARAGRAPH #	CLASSIFICATION	GOVT OR A/E REVWR	CONTRACTOR: SCHEDULE DATES			CONTRACTOR ACTION			APPROVING AUTHORITY					
							SUBMIT	APPROVAL NEEDED BY	MATERIAL NEEDED BY	ACTION CODE	DATE OF ACTION	DATE FWD TO APPR AUTH/ DATE RCD FROM CONTR	DATE FWD TO OTHER REVIEWER	DATE RCD FROM OTH REVIEWER	ACTION CODE	DATE OF ACTION	MAILED TO CONTR/ DATE RCD FRM APPR AUTH	REMARKS
(a)	(b)	(c)	(d)	(e)	(f)		(g)	(h)	(i)	(j)	(k)	(l)	(m)	(n)	(o)	(p)	(q)	(r)
		09900	SD-08 Manufacturer's Instructions															
			Application	3.4														
		10214	SD-02 Shop Drawings															
			Louvers		G	AE												
			SD-03 Product Data															
			Louvers															
		10260	SD-03 Product Data															
			Corner Guards	2.2														
			SD-04 Samples															
			Finish	2.7														
		10440	SD-02 Shop Drawings															
			Interior Signage		G	AE												
			SD-03 Product Data															
			Interior Signage		G	AE												
			SD-04 Samples															
			Interior Signage		G	AE												
		10522	SD-03 Product Data															
			Fire Extinguisher Cabinets															
		10800	SD-03 Product Data															
			Accessory Items	2.2	G	AE												
		13280A	SD-03 Product Data															
			Respiratory Protection Program	1.12	G	AO												
			Cleanup and Disposal	3.11	G	AO												
			Detailed Drawings		G	AO												
			Qualifications	1.5	G	AO												
			Training Program	1.11	G	AO												

SUBMITTAL REGISTER

CONTRACT NO.

TITLE AND LOCATION
Consolidated Lodging Facility, Phase IV, Minneapolis-St Paul IAP

CONTRACTOR

ACTIVITY NO	TRANSMITTAL NO	SPEC SECT	DESCRIPTION ITEM SUBMITTED	PARAGRAPH #	CLASSIFICATION	GOVT OR A/E REVWR	CONTRACTOR: SCHEDULE DATES			CONTRACTOR ACTION			APPROVING AUTHORITY					MAILED TO CONTR/ DATE RCD FRM APPR AUTH	REMARKS
							SUBMIT	APPROVAL NEEDED BY	MATERIAL NEEDED BY	ACTION CODE	DATE OF ACTION	DATE FWD TO APPR AUTH/ DATE RCD FROM CONTR	DATE FWD TO OTHER REVIEWER	DATE RCD FROM OTH REVIEWER	ACTION CODE	DATE OF ACTION			
(a)	(b)	(c)	(d)	(e)	(f)		(g)	(h)	(i)	(j)	(k)	(l)	(m)	(n)	(o)	(p)	(q)	(r)	
		13280A	Medical Requirements	1.10	G	AO													
			SD-06 Test Reports																
			Exposure Assessment and Air	3.9	G	AO]													
			Monitoring																
			Local Exhaust Ventilation	1.20	G	AO													
			Licenses, Permits and	1.14	G	AO													
			Notifications																
		13286N	SD-07 Certificates																
			Qualifications of CIH	1.8.1	G	AO													
			Training Certification	1.8.1	G	AO													
			PCB and Lamp Removal Work	1.8.2	G	AO													
			Plan																
			PCB and Lamp Disposal Plan	1.8.3	G	AO													
			SD-11 Closeout Submittals																
			Transporter certification	3.5.2	G														
			Certification of Decontamination	3.2.4															
			Certificate of Disposal and/or	3.5.2.1															
			recycling																
			DD Form 1348-1	3.5.3.2															
			Testing results																
		13851	SD-01 Preconstruction Submittals																
			Storage Batteries	2.2															
			Voltage Drop																
			Spare Parts																
			]																

SUBMITTAL REGISTER

CONTRACT NO.

TITLE AND LOCATION
Consolidated Lodging Facility, Phase IV, Minneapolis-St Paul IAP

CONTRACTOR

ACTIVITY NO	TRANSMITTAL NO	SPEC SECT	DESCRIPTION ITEM SUBMITTED	PARAGRAPH #	CLASSIFICATION	GOVT OR A/E REVWR	CONTRACTOR: SCHEDULE DATES			CONTRACTOR ACTION			APPROVING AUTHORITY					
							SUBMIT	APPROVAL NEEDED BY	MATERIAL NEEDED BY	ACTION CODE	DATE OF ACTION	DATE FWD TO APPR AUTH/ DATE RCD FROM CONTR	DATE FWD TO OTHER REVIEWER	DATE RCD FROM OTH REVIEWER	ACTION CODE	DATE OF ACTION	MAILED TO CONTR/ DATE RCD FRM APPR AUTH	REMARKS
(a)	(b)	(c)	(d)	(e)	(f)		(g)	(h)	(i)	(j)	(k)	(l)	(m)	(n)	(o)	(p)	(q)	(r)
		13851	Technical Data and Computer	1.4														
			Software															
			GA															
			SD-04 Samples															
			Fire Alarm Reporting System															
			GA1															
			SD-06 Test Reports															
			Training	3.6														
			SD-08 Manufacturer’s Instructions															
			Testing	3.5														
			SD-09 Manufacturer’s Field															
			Reports															
			Testing	3.5														
			Equipment															
			GA															
			Qualifications	1.2.7														
			Technical Data and Computer	1.4														
			Software															
			GA															
		13930	SD-02 Shop Drawings															
			Sprinkler System Shop Drawings		G	AE												
			As-Built Drawings															
			SD-03 Product Data															
			Load Calculations for Sizing Sway															
			Bracing															
			Sprinkler System Equipment		G	AE												

SUBMITTAL REGISTER

CONTRACT NO.

TITLE AND LOCATION
Consolidated Lodging Facility, Phase IV, Minneapolis-St Paul IAP

CONTRACTOR

ACTIVITY NO	TRANSMITTAL NO	SPEC SECT	DESCRIPTION ITEM SUBMITTED	PARAGRAPH #	CLASSIFICATION	GOVT OR A/E REVWR	CONTRACTOR: SCHEDULE DATES			CONTRACTOR ACTION			APPROVING AUTHORITY					MAILED TO CONTR/ DATE RCD FRM APPR AUTH	REMARKS
							SUBMIT	APPROVAL NEEDED BY	MATERIAL NEEDED BY	ACTION CODE	DATE OF ACTION	DATE FWD TO APPR AUTH/ DATE RCD FROM CONTR	DATE FWD TO OTHER REVIEWER	DATE RCD FROM OTH REVIEWER	ACTION CODE	DATE OF ACTION		
(a)	(b)	(c)	(d)	(e)	(f)		(g)	(h)	(i)	(j)	(k)	(l)	(m)	(n)	(o)	(p)	(q)	(r)
		13930	Hydraulic Calculations	1.4	G	AE												
			Spare Parts															
			Installer Qualifications	1.6														
			Submittal Preparer's	1.5														
			Qualifications															
			Preliminary Tests															
			Final Test		G	AO												
			SD-07 Certificates															
			Contractor's Material & Test															
			Certificates															
			SD-08 Manufacturer’s Instructions															
			Test Procedures															
			SD-10 Operation and Maintenance															
			Data															
			Sprinkler System															
		15400	SD-02 Shop Drawings															
			Plumbing System		G	AE												
			Electrical Schematics		G	AE												
			SD-03 Product Data															
			Welding															
			SD-06 Test Reports															
			Tests, Flushing and Disinfection	3.9														
			Backflow Prevention Assembly		G	AO												
			Tests															
			SD-07 Certificates															
			Materials and Equipment		G	AO												

SUBMITTAL REGISTER

CONTRACT NO.

TITLE AND LOCATION
Consolidated Lodging Facility, Phase IV, Minneapolis-St Paul IAP

CONTRACTOR

ACTIVITY NO	TRANSMITTAL NO	SPEC SECT	DESCRIPTION ITEM SUBMITTED	PARAGRAPH #	CLASSIFICATION	GOVT OR A/E REVWR	CONTRACTOR: SCHEDULE DATES			CONTRACTOR ACTION			APPROVING AUTHORITY					
							SUBMIT	APPROVAL NEEDED BY	MATERIAL NEEDED BY	ACTION CODE	DATE OF ACTION	DATE FWD TO APPR AUTH/ DATE RCD FROM CONTR	DATE FWD TO OTHER REVIEWER	DATE RCD FROM OTH REVIEWER	ACTION CODE	DATE OF ACTION	MAILED TO CONTR/ DATE RCD FRM APPR AUTH	REMARKS
(a)	(b)	(c)	(d)	(e)	(f)		(g)	(h)	(i)	(j)	(k)	(l)	(m)	(n)	(o)	(p)	(q)	(r)
		15400	Bolts		G AE													
			SD-08 Manufacturer's Instructions															
			Plumbing System															
			SD-10 Operation and Maintenance															
			Data															
			Plumbing System															
		15653	SD-03 Product Data															
			Air-Conditioning and Heating		G AO													
			System															
			Spare Parts Data		G AE													
			Tests	3.2														
			Demonstrations	3.5	G AE													
			Qualifications															
			Verification of Dimensions	1.5.1														
			SD-06 Test Reports															
			Tests	3.2	G AO													
			System Performance Tests		G AE													
			Inspections															
			SD-07 Certificates															
			Air-Conditioning System		G AE													
			Service Organizations															
			SD-08 Manufacturer's Instructions															
			Framed Instructions															
			SD-10 Operation and Maintenance															
			Data															
			Operation Manual															

SUBMITTAL REGISTER

CONTRACT NO.

TITLE AND LOCATION
Consolidated Lodging Facility, Phase IV, Minneapolis-St Paul IAP

CONTRACTOR

ACTIVITY NO	TRANSMITTAL NO	SPEC SECT	DESCRIPTION ITEM SUBMITTED	PARAGRAPH #	CLASSIFICATION	GOVT OR A/E REVWR	CONTRACTOR: SCHEDULE DATES			CONTRACTOR ACTION			APPROVING AUTHORITY					MAILED TO CONTR/ DATE RCD FRM APPR AUTH	REMARKS
							SUBMIT	APPROVAL NEEDED BY	MATERIAL NEEDED BY	ACTION CODE	DATE OF ACTION	DATE FWD TO APPR AUTH/ DATE RCD FROM CONTR	DATE FWD TO OTHER REVIEWER	DATE RCD FROM OTH REVIEWER	ACTION CODE	DATE OF ACTION		
(a)	(b)	(c)	(d)	(e)	(f)		(g)	(h)	(i)	(j)	(k)	(l)	(m)	(n)	(o)	(p)	(q)	(r)
		15653	Maintenance Manual															
		15895	SD-03 Product Data															
			Components and Equipment Data		G	AE												
			Test Schedules															
			Field Training Schedule															
			Similar Services															
			SD-06 Test Reports															
			Test Reports															
			SD-07 Certificates															
			Bolts															
			SD-08 Manufacturer’s Instructions															
			Test Procedures															
			Welding Procedures															
			System Diagrams		G	AE												
			SD-10 Operation and Maintenance															
			Data															
			Air Supply, Distribution,															
			Ventilation, and Exhaust Manuals															
		15951	SD-02 Shop Drawings															
			HVAC Control System		G	AE												
			SD-03 Product Data															
			Equipment Compliance Booklet		G	AE												
			Commissioning Procedures															
			Performance Verification Test															
			Procedures															
			Training Course Materials		G	AE												

SUBMITTAL REGISTER

CONTRACT NO.

TITLE AND LOCATION
Consolidated Lodging Facility, Phase IV, Minneapolis-St Paul IAP

CONTRACTOR

ACTIVITY NO	TRANSMITTAL NO	SPEC SECT	DESCRIPTION ITEM SUBMITTED	PARAGRAPH #	CLASSIFICATION	GOVT OR A/E REVWR	CONTRACTOR: SCHEDULE DATES			CONTRACTOR ACTION			APPROVING AUTHORITY					MAILED TO CONTR/ DATE RCD FRM APPR AUTH	REMARKS
							SUBMIT	APPROVAL NEEDED BY	MATERIAL NEEDED BY	ACTION CODE	DATE OF ACTION	DATE FWD TO APPR AUTH/ DATE RCD FROM CONTR	DATE FWD TO OTHER REVIEWER	DATE RCD FROM OTH REVIEWER	ACTION CODE	DATE OF ACTION			
(a)	(b)	(c)	(d)	(e)	(f)		(g)	(h)	(i)	(j)	(k)	(l)	(m)	(n)	(o)	(p)	(q)	(r)	
		15951	Service Organizations																
			SD-06 Test Reports																
			Commissioning Report																
			Performance Verification Test																
			Report																
			SD-10 Operation and Maintenance																
			Data																
			Operation Manual		G	AE													
			Maintenance and Repair Manual		G	AE													
		15990	SD-01 Preconstruction Submittals																
			TAB Related HVAC Submittals																
			FIO																
			SD-04 Samples																
			TAB Schematic Drawings and																
			Report Forms																
			GA1																
			SD-06 Test Reports																
			TAB Procedures																
			GA1																
			SD-07 Certificates																
			Systems Readiness Check																
			FIO																
			TAB Execution																
			GA1																
			TAB Verification																
			SD-08 Manufacturer's Instructions																

SUBMITTAL REGISTER

CONTRACT NO.

TITLE AND LOCATION
Consolidated Lodging Facility, Phase IV, Minneapolis-St Paul IAP

CONTRACTOR

ACTIVITY NO	TRANSMITTAL NO	SPEC SECT	DESCRIPTION ITEM SUBMITTED	PARAGRAPH #	CLASSIFICATION	GOVT OR A/E REVWR	CONTRACTOR: SCHEDULE DATES			CONTRACTOR ACTION			APPROVING AUTHORITY					
							SUBMIT	APPROVAL NEEDED BY	MATERIAL NEEDED BY	ACTION CODE	DATE OF ACTION	DATE FWD TO APPR AUTH/ DATE RCD FROM CONTR	DATE FWD TO OTHER REVIEWER	DATE RCD FROM OTH REVIEWER	ACTION CODE	DATE OF ACTION	MAILED TO CONTR/ DATE RCD FRM APPR AUTH	REMARKS
(a)	(b)	(c)	(d)	(e)	(f)		(g)	(h)	(i)	(j)	(k)	(l)	(m)	(n)	(o)	(p)	(q)	(r)
		15990	TAB Firm															
			GA1															
			TAB Specialist															
			Instrument Calibration															
			FIO															
			SD-09 Manufacturer’s Field															
			Reports															
			Design Review Report															
			GA1															
			Systems Readiness Check Report															
			TAB Report															
			TAB Verification Report															
			Ductwork Leak Testing															
			FIO															
		15995	SD-01 Preconstruction Submittals															
			Commissioning Team															
			FIO															
			SD-06 Test Reports															
			Test Procedures															
			FIO															
			SD-07 Certificates															
			Test Schedule															
			GA1															
			SD-09 Manufacturer’s Field															
			Reports															
			Test Reports															

SUBMITTAL REGISTER

CONTRACT NO.

TITLE AND LOCATION
Consolidated Lodging Facility, Phase IV, Minneapolis-St Paul IAP

CONTRACTOR

ACTIVITY NO	TRANSMITTAL NO	SPEC SECT	DESCRIPTION ITEM SUBMITTED	PARAGRAPH #	CLASSIFICATION	GOVT OR A/E REVWR	CONTRACTOR: SCHEDULE DATES			CONTRACTOR ACTION			APPROVING AUTHORITY					MAILED TO CONTR/ DATE RCD FRM APPR AUTH	REMARKS
							SUBMIT	APPROVAL NEEDED BY	MATERIAL NEEDED BY	ACTION CODE	DATE OF ACTION	DATE FWD TO APPR AUTH/ DATE RCD FROM CONTR	DATE FWD TO OTHER REVIEWER	DATE RCD FROM OTH REVIEWER	ACTION CODE	DATE OF ACTION			
(a)	(b)	(c)	(d)	(e)	(f)		(g)	(h)	(i)	(j)	(k)	(l)	(m)	(n)	(o)	(p)	(q)	(r)	
		15995	GA1																
		16120	SD-01 Preconstruction Submittals																
			Installation Instructions	2.2															
			FIO																
			SD-09 Manufacturer’s Field																
			Reports																
			Tests, Inspections, and	2.3															
			Verifications																
			FIO																
		16403	SD-01 Preconstruction Submittals																
			Equipment		G														
			SD-04 Samples																
			Outline Drawings		G														
			Switchboards	2.7	G	AE													
			Panelboards	2.8	G	AE													
			SD-08 Manufacturer’s Instructions																
			Factory Tests	2.10															
			SD-09 Manufacturer’s Field																
			Reports																
			Factory Tests	2.10															
		16415	SD-01 Preconstruction Submittals																
			Fault Current and Protective																
			Device Coordination Study																
			GA																
			Manufacturer's Catalog																

SUBMITTAL REGISTER

CONTRACT NO.

TITLE AND LOCATION
Consolidated Lodging Facility, Phase IV, Minneapolis-St Paul IAP

CONTRACTOR

ACTIVITY NO	TRANSMITTAL NO	SPEC SECT	DESCRIPTION ITEM SUBMITTED	PARAGRAPH #	CLASSIFICATION	GOVT OR A/E REVWR	CONTRACTOR: SCHEDULE DATES			CONTRACTOR ACTION			APPROVING AUTHORITY					
							SUBMIT	APPROVAL NEEDED BY	MATERIAL NEEDED BY	ACTION CODE	DATE OF ACTION	DATE FWD TO APPR AUTH/ DATE RCD FROM CONTR	DATE FWD TO OTHER REVIEWER	DATE RCD FROM OTH REVIEWER	ACTION CODE	DATE OF ACTION	MAILED TO CONTR/ DATE RCD FRM APPR AUTH	REMARKS
(a)	(b)	(c)	(d)	(e)	(f)		(g)	(h)	(i)	(j)	(k)	(l)	(m)	(n)	(o)	(p)	(q)	(r)
		16415	Material, Equipment, and Fixture															
			Lists															
			GA1															
			Installation Procedures															
			FIO															
			SD-04 Samples															
			Interior Electrical Equipment															
			GA1															
			As-Built Drawings															
			GA															
			SD-08 Manufacturer’s Instructions															
			Onsite Test															
			GA															
			SD-09 Manufacturer’s Field															
			Reports															
			Factory Test Reports															
			GA															
			Field Test Plan															
			Field Test Reports															
			Materials and Equipment															
			FIO															
		16528	SD-01 Preconstruction Submittals															
			Equipment and Materials															
			GA															
			Spare Parts															
			FIO															

SUBMITTAL REGISTER

CONTRACT NO.

TITLE AND LOCATION
Consolidated Lodging Facility, Phase IV, Minneapolis-St Paul IAP

CONTRACTOR

ACTIVITY NO	TRANSMITTAL NO	SPEC SECT	DESCRIPTION ITEM SUBMITTED	PARAGRAPH #	CLASSIFICATION	GOVT OR A/E REVWR	CONTRACTOR: SCHEDULE DATES			CONTRACTOR ACTION			APPROVING AUTHORITY					
							SUBMIT	APPROVAL NEEDED BY	MATERIAL NEEDED BY	ACTION CODE	DATE OF ACTION	DATE FWD TO APPR AUTH/ DATE RCD FROM CONTR	DATE FWD TO OTHER REVIEWER	DATE RCD FROM OTH REVIEWER	ACTION CODE	DATE OF ACTION	MAILED TO CONTR/ DATE RCD FRM APPR AUTH	REMARKS
(a)	(b)	(c)	(d)	(e)	(f)		(g)	(h)	(i)	(j)	(k)	(l)	(m)	(n)	(o)	(p)	(q)	(r)
		16528	SD-04 Samples															
			Lighting System															
			GA1															
			As-Built Drawings															
			Operating Test															
			GA															
			Ground Resistance															
			Measurements															
			Lighting System															
			GA															
		16710	SD-01 Preconstruction Submittals															
			Spare Parts															
			FIO															
			SD-04 Samples															
			Premises Distribution System															
			GA															
			Record Drawings															
			SD-06 Test Reports															
			Manufacturer's Recommendations															
			GA															
			SD-08 Manufacturer’s Instructions															
			Test Plan															
			GA															
			Qualifications	1.4														
			SD-09 Manufacturer’s Field															
			Reports															

SUBMITTAL REGISTER

CONTRACT NO.

TITLE AND LOCATION
Consolidated Lodging Facility, Phase IV, Minneapolis-St Paul IAP

CONTRACTOR

ACTIVITY NO	TRANSMITTAL NO	SPEC SECT	DESCRIPTION ITEM SUBMITTED	PARAGRAPH #	CLASSIFICATION	GOVT OR A/E REVWR	CONTRACTOR: SCHEDULE DATES			CONTRACTOR ACTION			APPROVING AUTHORITY					
							SUBMIT	APPROVAL NEEDED BY	MATERIAL NEEDED BY	ACTION CODE	DATE OF ACTION	DATE FWD TO APPR AUTH/ DATE RCD FROM CONTR	DATE FWD TO OTHER REVIEWER	DATE RCD FROM OTH REVIEWER	ACTION CODE	DATE OF ACTION	MAILED TO CONTR/ DATE RCD FRM APPR AUTH	REMARKS
(a)	(b)	(c)	(d)	(e)	(f)		(g)	(h)	(i)	(j)	(k)	(l)	(m)	(n)	(o)	(p)	(q)	(r)
		16710	Test Reports															
			FIO															
			Premises Distribution System															
			FIO															
			Materials and Equipment	2.1														
			Installers															
			GA															
			Record Keeping and	1.8														
			Documentation															
			GA															

This page was intentionally left blank for duplex printing.

TRANSMITTAL OF SHOP DRAWINGS, EQUIPMENT DATA, MATERIAL SAMPLES OR MANUFACTURE'S CERTIFICATES OF COMPLIANCE	DATE	TRANSMITTAL NO.

SECTION I - REQUEST FOR APPROVAL OF THE FOLLOWING ITEMS (This section to be initiated by the Contractor)

TO:	FROM:	CONTRACT NO.	CHECK ONE: ☐ THIS IS A NEW TRANSMITTAL ☐ THIS IS A RE-SUBMITTAL OF TRANSMITTAL NO. _____
SPECIFICATION SECTION NO.	PROJECT TITLE AND LOCATION		CHECK ONE: ☐ FIO ☐ G-RE ☐ G-ED ☐ G-AE

ITEM NO. *a.*	DESCRIPTION OF ITEM SUBMITTED *(Type, size, model, etc.)* *b.*	MFG. OR CONTR. CAT., CURVE DRAWING OR BROCHURE NO. *c.*	NO. of COPIES *d.*	CONTRACT REFERENCE DOCUMENT SPEC. PARA. *e.*	DWG. SHEET *f.*	FOR CONTRACTOR USE CODE *g.*	VARIA-TION *(SEE #6)* *h.*	FOR CE USE CODE *i.*

REMARKS:

I certify that the above submittal items have been reviewed in detail and are correct and in strict compliance with the contract drawings and specifications except as otherwise stated.

_____

NAME, PHONE NUMBER, AND SIGNATURE OF CONTRACTOR QC

SECTION II - APPROVAL ACTION

ENCLOSURES RETURNED *(List by Item No.)*	NAME, TITLE, AND SIGNATURE OF APPROVING AUTHORITY	DATE

INSTRUCTIONS

1. Section I will be initiated by the Contractor in the required number of copies.

2. Each transmittal shall be numbered consecutively in the space provided for "Transmittal No.”. This number, in addition to the contract number, will form a serial number for identifying each submittal. For new submittals or resubmittals mark the appropriate box; on resubmittals, insert transmittal number of last submission as well as the new submittal number.

3. The "Item No." will be the same "Item No." as indicated on ENG FORM 4288-R for each entry on this form.

4. Submittals requiring expeditious handling will be submitted on a separate form.

5. Separate transmittal form will be used for submittals under separate sections of the specifications.

6. A check shall be placed in the "Variation" column when a submittal is not in accordance with the plans and specifications--also, a written statement to that effect shall be included in the space provided for "Remarks".

7. Form is self-transmittal, letter of transmittal is not required.

8. When a sample of material or Manufacturer's Certificate of Compliance is transmitted, indicate "Sample" or "Certificate" in column c, Section I.

9. U.S. Army Corps of Engineers approving authority will assign action codes as indicated below in space provided in Section I, column i to each item submitted. In addition they will ensure enclosures are indicated and attached to the form prior to return to the contractor. The Contractor will assign action codes as indicated below in Section I, column g, to each item submitted.

THE FOLLOWING ACTION CODES ARE GIVEN TO ITEMS SUBMITTED

A -- Approved as submitted.

B -- Approved, except as noted on drawings.

C -- Approved, except as noted on drawings. Refer to attached sheet resubmission required.

D -- Will be returned by separate correspondence.

E -- Disapproved (See attached).

F -- Receipt acknowledged.

FX -- Receipt acknowledged, does not comply as noted with contract requirements.

G -- Other (Specify)

10. Approval of items does not relieve the contractor from complying with all the requirements of the contract plans and specifications.

(Reverse of CENWO-CD-Q SUBMITTAL FORM, IFB-1 (Omaha Version of ENG Form 4025-R))

SECTION TABLE OF CONTENTS

DIVISION 01 - GENERAL REQUIREMENTS

SECTION 01355

ENVIRONMENTAL PROTECTION

10/00

PART 1 GENERAL

1.1 REFERENCES
1.2 DEFINITIONS
1.2.1 Environmental Pollution and Damage
1.2.2 Environmental Protection
1.2.3 Contractor Generated Hazardous Waste
1.2.4 Installation Pest Management Coordinator
1.2.5 Land Application for Discharge Water
1.2.6 Pesticide
1.2.7 Pests
1.2.8 Surface Discharge
1.2.9 Waters of the United States
1.2.10 Wetlands
1.3 GENERAL REQUIREMENTS
1.4 SUBCONTRACTORS
1.5 CERTIFICATION REQUIREMENTS
1.6 ENVIRONMENTAL COORDINATION, PERMITS, NOTICES, REVIEWS AND/OR APPROVALS
1.6.1 Applications, Supporting Documents, and Fees
1.6.2 Permits, Notices, Reviews, and/or Approvals
1.7 PAYMENT
1.8 SUBMITTALS
1.9 ENVIRONMENTAL PROTECTION PLAN
1.9.1 Compliance
1.9.2 Contents
1.9.3 Appendix
1.10 PROTECTION FEATURES
1.11 ENVIRONMENTAL ASSESSMENT OF CONTRACT DEVIATIONS
1.12 NOTIFICATION

PART 2 PRODUCTS (NOT USED)

PART 3 EXECUTION

3.1 LAND RESOURCES
3.1.1 Work Area Limits
3.1.2 Landscape
3.1.3 Erosion and Sediment Controls
3.1.4 Contractor Facilities and Work Areas
3.2 WATER RESOURCES
3.2.1 Wetlands
3.3 AIR RESOURCES
3.3.1 Particulates
3.3.2 Odors

3.3.3 Sound Intrusions
3.3.4 Burning
3.3.5 Hydrocarbons and Carbon Monoxide
3.4 MANAGEMENT AND DISPOSAL OF WASTE AND CHEMICAL MATERIALS
3.4.1 Solid Wastes
3.4.2 Chemicals and Chemical Wastes
3.4.3 Contractor Generated Hazardous Wastes/Excess Hazardous Materials
3.4.4 Fuel and Lubricants
3.4.5 Waste Water
3.5 RECYCLING AND WASTE MINIMIZATION
3.6 HISTORICAL, ARCHAEOLOGICAL, AND CULTURAL RESOURCES
3.7 BIOLOGICAL RESOURCES
3.8 INTEGRATED PEST MANAGEMENT
3.8.1 Pesticide Delivery and Storage
3.8.2 Qualifications
3.8.3 Pesticide Handling Requirements
3.8.4 Application
3.9 PREVIOUSLY USED EQUIPMENT
3.10 MAINTENANCE OF POLLUTION FACILITIES
3.11 MILITARY MUNITIONS
3.12 TRAINING OF CONTRACTOR PERSONNEL
3.13 POST CONSTRUCTION CLEANUP

-- End of Section Table of Contents --

SECTION 01355

ENVIRONMENTAL PROTECTION
10/00

PART 1 GENERAL

Attachments

Minnesota Pollution Control Agency (MPCA) General Permit Authorization to Discharge Storm Water Associated with Construction Activity Under the National Pollutant Discharge Elimination System/State Disposal System Permit Program (#MNR110000)
Application for General Storm Water Permit for Construction Activity (#MNR110000)
Inspectors Log for MPCA Storm Water Permit
Notice of Termination of Converage Under the National Pollutant Discharge Elimination System

1.1 REFERENCES

The publications listed below form a part of this specification to the extent referenced. The publications are referred to in the text by basic designation only.

U.S. ARMY (DA)

AR 200-5	Pest Management

U.S. NATIONAL ARCHIVES AND RECORDS ADMINISTRATION (NARA)

33 CFR 328	Definitions
40 CFR 68	Chemical Accident Prevention Provisions
40 CFR 152 - 186	Pesticide Programs
40 CFR 260	Hazardous Waste Management System: General
40 CFR 261	Identification and Listing of Hazardous Waste
40 CFR 262	Standards Applicable to Generators of Hazardous Waste
40 CFR 279	Standards for the Management of Used Oil
40 CFR 302	Designation, Reportable Quantities, and Notification
40 CFR 355	Emergency Planning and Notification
49 CFR 171 - 178	Hazardous Materials Regulations

U.S. ARMY CORPS OF ENGINEERS (USACE)

EM 385-1-1	(1996) U.S. Army Corps on Engineers Safety and Health Requirements Manual
WETLAND MANUAL	Corps of Engineers Wetlands Delineation Manual Technical Report Y-87-1
Minneapolis-St Paul IAP	SITE SPECIFIC REGULATIONS
Form APNP 1004	Installation Spill Contingency Plan
SWPPP	Storm Water Pollution Prevention Plan

1.2 DEFINITIONS

1.2.1 Environmental Pollution and Damage

Environmental pollution and damage is the presence of chemical, physical, or biological elements or agents which adversely affect human health or welfare; unfavorably alter ecological balances of importance to human life; affect other species of importance to humankind; or degrade the environment aesthetically, culturally and/or historically.

1.2.2 Environmental Protection

Environmental protection is the prevention/control of pollution and habitat disruption that may occur to the environment during construction. The control of environmental pollution and damage requires consideration of land, water, and air; biological and cultural resources; and includes management of visual aesthetics; noise; solid, chemical, gaseous, and liquid waste; radiant energy and radioactive material as well as other pollutants.

1.2.3 Contractor Generated Hazardous Waste

Contractor generated hazardous waste means materials that, if abandoned or disposed of, may meet the definition of a hazardous waste. These waste streams would typically consist of material brought on site by the Contractor to execute work, but are not fully consumed during the course of construction. Examples include, but are not limited to, excess paint thinners (i.e. methyl ethyl ketone, toluene etc.), waste thinners, excess paints, excess solvents, waste solvents, excess pesticides, and contaminated pesticide equipment rinse water.

1.2.4 Installation Pest Management Coordinator

Installation Pest Management Coordinator (IPMC) is the individual officially designated by the Installation Commander to oversee the Installation Pest Management Program and the Installation Pest Management Plan.

1.2.5 Land Application for Discharge Water

The term "Land Application" for discharge water implies that the Contractor shall discharge water at a rate which allows the water to percolate into the soil. No sheeting action, soil erosion, discharge into storm sewers, discharge into defined drainage areas, or discharge into the "waters of the United States" shall occur. Land Application shall be in compliance with all applicable Federal, State, and local laws and regulations.

1.2.6 Pesticide

Pesticide is defined as any substance or mixture of substances intended for preventing, destroying, repelling, or mitigating any pest, or intended for use as a plant regulator, defoliant or desiccant.

1.2.7 Pests

The term "pests" means arthropods, birds, rodents, nematodes, fungi, bacteria, viruses, algae, snails, marine borers, snakes, weeds and other organisms (except for human or animal disease-causing organisms) that adversely affect readiness, military operations, or the well-being of personnel and animals; attack or damage real property, supplies, equipment, or vegetation; or are otherwise undesirable.

1.2.8 Surface Discharge

The term "Surface Discharge" implies that the water is discharged with possible sheeting action and subsequent soil erosion may occur. Waters that are surface discharged may terminate in drainage ditches, storm sewers, creeks, and/or "waters of the United States" and would require a permit to discharge water from the governing agency.

1.2.9 Waters of the United States

All waters which are under the jurisdiction of the Clean Water Act, as defined in 33 CFR 328.

1.2.10 Wetlands

Wetlands means those areas that are inundated or saturated by surface or ground water at a frequency and duration sufficient to support, and that under normal circumstances do support, a prevalence of vegetation typically adapted for life in saturated soil conditions. Wetlands generally include swamps, marshes, and bogs. Official determination of whether or not an area is classified as a wetland must be done in accordance with WETLAND MANUAL.

1.3 GENERAL REQUIREMENTS

The Contractor shall minimize environmental pollution and damage that may occur as the result of construction operations. The environmental resources within the project boundaries and those affected outside the limits of permanent work shall be protected during the entire duration of this contract. The Contractor shall comply with all applicable environmental Federal, State, and local laws and regulations. The Contractor shall be responsible for any delays resulting from failure to comply with environmental laws and regulations.

1.4 SUBCONTRACTORS

The Contractor shall ensure compliance with this section by subcontractors.

1.5 CERTIFICATION REQUIREMENTS

An environmental agency may require design and construction documents to be certified by a Professional Engineer (PE) registered in the State of Minnesota. The Contractor shall comply with the certification requirements

of the environmental regulatory agencies.

1.6 ENVIRONMENTAL COORDINATION, PERMITS, NOTICES, REVIEWS AND/OR APPROVALS

The Contractor shall be responsible for contacting the appropriate Federal, State, Regional, and local environmental agencies to identify all required environmental permits (construction and operating), notices, reviews, and approvals required for the project. Once the requirements are identified, the Contractor shall be responsible for coordinating the requirements with Minneapolis-St Pauls IAP's Environmental personnel and the Contracting Officer in regard to implementation for a Federal Facility project. The Contractor shall ensure that all coordination, permits, notices, reviews and/or approvals are completed and submitted for review with each applicable phase of the design. Prior to construction starting for each design phase, the Contractor shall assure that all permits and/or approval are received and that copies are submitted to the Contracting Officer. The Contractor shall be responsible for any contract delays resulting from failure to obtain environmental permits, notices, reviews and/or approvals when required.

1.6.1 Applications, Supporting Documents, and Fees

The Contractor shall obtain, complete, and submit all environmental permit applications and notices including any documents required for a modification for an existing permit held by the Facility. If Minneapolis-St. Paul IAP is required to submit the application to the governing agencies, the Contractor shall be responsible for coordination with Minneapolis-St. Paul IAP for the submittal. The Contractor is responsible for preparing all supporting documents, including but not limited to engineering reports, emission surveys, diagrams, pollutant load calculations, etc. If, in lieu of permits, the governing agency requires review and approval of the design, the Contractor shall submit and obtain approval of the design and associated documents. The Contractor shall be responsible for all fees associated with the permits, applications, reviews, approvals, and notices.

1.6.2 Permits, Notices, Reviews, and/or Approvals

The following is a listing of permits, notices, reviews, and/or approvals which **may be** required for this project. This listing and requirements are not to be considered all-inclusive by the Contractor, but is provided as information that may be used in successfully accomplishing the environmental compliances. See Internet site http://www.pca.state.mn.us/water/permits/ for Minnesota Pollution Control Agency.

a. If construction activities results in disturbance of 1 acre of land or more, coverage under the Minnesota Pollution Control Agency’s (MPCA) Storm Water Program, Authorization to Discharge Under the Surface Water Discharge System Permit #MNR110000 is required. The Contractor shall be responsible for implementing the terms and requirements of the permit and shall be considered the "permittee". The Contractor shall complete and submit a Notice of Intent (NOI) and the Notice of Termination (NOT)in accordance with Permit #MNR110000 and shall be considered the "Facility Operator". The Contractor shall not begin construction until an authorization letter from the State granting coverage for the storm water discharges is received. The Contractor shall be responsible for posting a copy of the NOI and the authorization

letter at the construction site in a prominent place for public viewing. The Contractor shall prepare and implement a Storm Water Pollution Prevention Plan, inspections, and reporting in accordance with the #MNR110000. Any temporary or permanent erosion and sedimentation control measures shown on the drawings shall be incorporated into the Contractor's Storm Water Pollution Prevention Plan. The Contractor shall be responsible for assuring that their SWPPP is in accordance Best Management Practices (BMP). The Contractor shall retain copies of the storm water pollution prevention plan and all reports in accordance with the permit. All submissions to the State shall be by certified mail. The Contractor shall include copies of all submittals to the State of Minnesota, plans, and reports in the Appendix to the Environmental Protection Plan.

1.7 PAYMENT

No separate payment will be made for work covered under this section. The Contractor shall be responsible for payment of fees associated with environmental permits, application, and/or notices obtained by the Contractor. All costs associated with this section shall be included in the contract price. The Contractor shall be responsible for payment of all fines/fees for violation or non-compliance with Federal, State, Regional and local laws and regulations.

1.8 SUBMITTALS

Government approval is required for submittals with a "G" designation; submittals not having a "G" designation are for information only. When used, a designation following the "G" designation identifies the office that will review the submittal for the Government. The following shall be submitted in accordance with Section 01330 SUBMITTAL PROCEDURES:

Administrative Submittals

Environmental Protection Plan

The environmental protection plan.

1.9 ENVIRONMENTAL PROTECTION PLAN

Prior to commencing construction activities or delivery of materials to the site, the Contractor shall submit an Environmental Protection Plan for review and approval by the Contracting Officer. The purpose of the Environmental Protection Plan is to present a comprehensive overview of known or potential environmental issues which the Contractor must address during construction. Issues of concern shall be defined within the Environmental Protection Plan as outlined in this section. The Contractor shall address each topic at a level of detail commensurate with the environmental issue and required construction task(s). Topics or issues which are not identified in this section, but which the Contractor considers necessary, shall be identified and discussed after those items formally identified in this section. Prior to submittal of the Environmental Protection Plan, the Contractor shall meet with the Contracting Officer for the purpose of discussing the implementation of the initial Environmental Protection Plan; possible subsequent additions and revisions to the plan including any reporting requirements; and methods for administration of the Contractor's Environmental Plans. The Environmental Protection Plan shall be current and maintained on site by the Contractor.

1.9.1 Compliance

No requirement in this Section shall be construed as relieving the Contractor of any applicable Federal, State, and local environmental protection laws and regulations. During Construction, the Contractor shall be responsible for identifying, implementing, and submitting for approval any additional requirements to be included in the Environmental Protection Plan.

1.9.2 Contents

The environmental protection plan shall include, but shall not be limited to, the following:

a. Name(s) of person(s) within the Contractor's organization who is(are) responsible for ensuring adherence to the Environmental Protection Plan.

b. Name(s) and qualifications of person(s) responsible for manifesting hazardous waste to be removed from the site, if applicable.

c. Name(s) and qualifications of person(s) responsible for training the Contractor's environmental protection personnel.

d. Description of the Contractor's environmental protection personnel training program.

e. An erosion and sediment control plan which identifies the type and location of the erosion and sediment controls to be provided. The plan shall include monitoring and reporting requirements to assure that the control measures are in compliance with the erosion and sediment control plan, Federal, State, and local laws and regulations. A Storm Water Pollution Prevention Plan (SWPPP) may be substituted for this plan. The Contractor's best management practices shall be in accordance with the Minneapolis-St Paul IAP's National Pollutant Discharge Elimination System (NPDES) Storm Water Pollution Prevention Plan (SWPPP) which may be reviewed at the Minneapolis-St Paul IAP's Environmental Office. Any temporary measures shall be removed after the area has been stabilized.

f. Drawings showing locations of proposed temporary excavations or embankments for haul roads, stream crossings, material storage areas, structures, sanitary facilities, and stockpiles of excess or spoil materials including methods to control runoff and to contain materials on the site.

g. Work area plan showing the proposed activity in each portion of the area and identifying the areas of limited use or nonuse. Plan should include measures for marking the limits of use areas including methods for protection of features to be preserved within authorized work areas.

h. The Spill Control plan shall include the procedures, instructions, and reports to be used in the event of an unforeseen spill of a substance regulated by 40 CFR 68, 40 CFR 302, 40 CFR 355, and/or regulated under State or Local laws and regulations. The Spill Control Plan supplements the requirements of EM 385-1-1 and the Form APNP 1004 Installation Spill Contingency Plan. This plan shall include as a minimum:

1. The name of the individual who will report any spills or hazardous substance releases and who will follow up with complete documentation. This individual shall immediately notify the Contracting Officer, Minneapolis-St Paul IAP's Fire Department, and Minneapolis-St Paul IAP's Environmental Office in addition to the legally required Federal, State, and local reporting channels (including the National Response Center 1-800-424-8802) if a reportable quantity is released to the environment. The plan shall contain a list of the required reporting channels and telephone numbers.

2. The name and qualifications of the individual who will be responsible for implementing and supervising the containment and cleanup.

3. Training requirements for Contractor's personnel and methods of accomplishing the training.

4. A list of materials and equipment to be immediately available at the job site, tailored to cleanup work of the potential hazard(s) identified.

5. The names and locations of suppliers of containment materials and locations of additional fuel oil recovery, cleanup, restoration, and material-placement equipment available in case of an unforeseen spill emergency.

6. The methods and procedures to be used for expeditious contaminant cleanup.

k. A non-hazardous solid waste disposal plan identifying methods and locations for solid waste disposal including clearing debris. The plan shall include schedules for disposal. The Contractor shall identify any subcontractors responsible for the transportation and disposal of solid waste. Licenses or permits shall be submitted for solid waste disposal sites that are not a commercial operating facility. Evidence of the disposal facility's acceptance of the solid waste shall be attached to this plan during the construction.

l. A recycling and solid waste minimization plan with a list of measures to reduce consumption of energy and natural resources. The plan shall detail the Contractor's actions to comply with and to participate in Federal, State, Regional, and local government sponsored recycling programs to reduce the volume of solid waste at the source.

m. An air pollution control plan detailing provisions to assure that dust, debris, materials, trash, etc., do not become air borne and travel off the project site.

n. A contaminant prevention plan that: identifies potentially hazardous substances to be used on the job site; identifies the intended actions to prevent introduction of such materials into the air, water, or ground; and details provisions for compliance with Federal, State, and local laws and regulations for storage and handling of these materials. In accordance with EM 385-1-1, a copy of the Material Safety Data Sheets (MSDS) and the maximum quantity of each hazardous material to be on site at any given time shall be included in the contaminant prevention plan. As new hazardous materials are

brought on site or removed from the site, the plan shall be updated.

o. A waste water management plan that identifies the methods and procedures for management and/or discharge of waste waters which are directly derived from construction activities, such as concrete curing water, clean-up water, dewatering of ground water, disinfection water, hydrostatic test water, and water used in flushing of lines. If a settling/retention pond is required, the plan shall include the design of the pond including drawings, removal plan, and testing requirements for possible pollutants. If land application will be the method of disposal for the waste water, the plan shall include a sketch showing the location for land application along with a description of the pretreatment methods to be implemented. If surface discharge will be the method of disposal, a copy of the permit and associated documents shall be included as an attachment prior to discharging the waste water. If disposal is to a sanitary sewer, the plan shall include documentation that the Waste Water Treatment Plant Operator has approved the flow rate, volume, and type of discharge.

p. A historical, archaeological, cultural resources biological resources and wetlands plan that defines procedures for identifying and protecting historical, archaeological, cultural resources, biological resources and wetlands known to be on the project site: and/or identifies procedures to be followed if historical archaeological, cultural resources, biological resources and wetlands not previously known to be on site or in the area are discovered during construction. The plan shall include methods to assure the protection of known or discovered resources and shall identify lines of communication between Contractor personnel and the Contracting Officer.

q. If applicable, a pesticide treatment plan shall be included and updated, as information becomes available. The plan shall include: sequence of treatment, dates, times, locations, pesticide trade name, EPA registration numbers, authorized uses, chemical composition, formulation, original and applied concentration, application rates of active ingredient (i.e. pounds of active ingredient applied), equipment used for application and calibration of equipment. The Contractor is responsible for Federal, State, Regional and Local pest management record keeping and reporting requirements as well as any additional Installation specific requirements. The Contractor shall follow AR 200-5 Pest Management, Chapter 2, Section III "Pest Management Records and Reports" for data required to be reported to the Installation.

1.9.3 Appendix

Copies of all environmental permits, permit application packages, approvals to construct, notifications, certifications, reports, and termination documents shall be attached, as an Appendix, to the Environmental Protection Plan.

1.10 PROTECTION FEATURES

This paragraph supplements the Contract Clause PROTECTION OF EXISTING VEGETATION, STRUCTURES, EQUIPMENT, UTILITIES, AND IMPROVEMENTS. Prior to start of any on site construction activities, the Contractor and the Contracting Officer shall make a joint condition survey. Immediately following the survey, the Contractor shall prepare a brief report including a plan describing the features requiring protection under the provisions of the Contract Clauses, which are not specifically identified on the drawings

as environmental features requiring protection along with the condition of trees, shrubs and grassed areas immediately adjacent to the site of work and adjacent to the Contractor's assigned storage area and access route(s), as applicable. This survey report shall be signed by both the the Contractor and the Contracting Officer upon mutual agreement as to its accuracy and completeness. The Contractor shall protect those environmental features included in the survey report and any indicated on the drawings, regardless of interference which their preservation may cause to the Contractor's work under the contract.

1.11 ENVIRONMENTAL ASSESSMENT OF CONTRACT DEVIATIONS

Any deviations, requested by the Contractor, from the drawings,plans and specifications which may have an environmental impact will be subject to approval by the Contracting Officer and may require an extended review, processing, and approval time. The Contracting Officer reserves the right to disapprove alternate methods, even if they are more cost effective, if the Contracting Officer determines that the proposed alternate method will have an adverse environmental impact.

1.12 NOTIFICATION

The Contracting Officer will notify the Contractor in writing of any observed noncompliance with Federal, State or local environmental laws or regulations, permits, and other elements of the Contractor's Environmental Protection plan. The Contractor shall, after receipt of such notice, inform the Contracting Officer of the proposed corrective action and take such action when approved by the Contracting Officer. The Contracting Officer may issue an order stopping all or part of the work until satisfactory corrective action has been taken. No time extensions shall be granted or equitable adjustments allowed to the Contractor for any such suspensions. This is in addition to any other actions the Contracting Officer may take under the contract, or in accordance with the Federal Acquisition Regulation or Federal Law.

PART 2 PRODUCTS (NOT USED)

PART 3 EXECUTION

3.1 LAND RESOURCES

The Contractor shall confine all activities to areas defined by the drawings and specifications. Prior to the beginning of any construction, the Contractor shall identify any land resources to be preserved within the work area. Except in areas indicated on the drawings or specified to be cleared, the Contractor shall not remove, cut, deface, injure, or destroy land resources including trees, shrubs, vines, grasses, topsoil, and land forms without approval. No ropes, cables, or guys shall be fastened to or attached to any trees for anchorage unless specifically authorized. The Contractor shall provide effective protection for land and vegetation resources at all times as defined in the following subparagraphs. Stone, soil, or other materials displaced into uncleared areas shall be removed by the Contractor.

3.1.1 Work Area Limits

Prior to commencing construction activities, the Contractor shall mark the areas that need not be disturbed under this contract. Isolated areas within the general work area which are not to be disturbed shall be marked

or fenced. Monuments and markers shall be protected before construction operations commence. Where construction operations are to be conducted during darkness, any markers shall be visible in the dark. The Contractor's personnel shall be knowledgeable of the purpose for marking and/or protecting particular objects.

3.1.2 Landscape

Trees, shrubs, vines, grasses, land forms and other landscape features indicated and defined on the drawings to be preserved shall be clearly identified by marking, fencing, or wrapping with boards, or any other approved techniques. The Contractor shall restore landscape features damaged or destroyed during construction operations outside the limits of the approved work area.

3.1.3 Erosion and Sediment Controls

The Contractor shall be responsible for providing erosion and sediment control measures in accordance with Federal, State, and local laws and regulations. The erosion and sediment controls selected and maintained by the Contractor shall be such that water quality standards are not violated as a result of the Contractor's construction activities. The area of bare soil exposed at any one time by construction operations should be kept to a minimum. The Contractor shall construct or install temporary and permanent erosion and sediment control best management practices (BMPs). BMPs may include, but not be limited to, vegetation cover, stream bank stabilization, slope stabilization, silt fences, construction of terraces, interceptor channels, sediment traps, inlet and outfall protection, diversion channels, and sedimentation basins. Any temporary measures shall be removed after the area has been stabilized.

3.1.4 Contractor Facilities and Work Areas

The Contractor's field offices, staging areas, stockpile storage, and temporary buildings shall be placed in areas designated on the drawings or as directed by the Contracting Officer. Temporary movement or relocation of Contractor facilities shall be made only when approved. Erosion and sediment controls shall be provided for on-site borrow and spoil areas to prevent sediment from entering nearby waters. Temporary excavation and embankments for plant and/or work areas shall be controlled to protect adjacent areas.

3.2 WATER RESOURCES

The Contractor shall monitor construction activities to prevent pollution of surface and ground waters. Toxic or hazardous chemicals shall not be applied to soil or vegetation unless otherwise indicated. All water areas affected by construction activities shall be monitored by the Contractor. For construction activities immediately adjacent to impaired surface waters, the Contractor shall be capable of quantifying sediment or pollutant loading to that surface water when required by State or Federally issued Clean Water Act permits.

3.2.1 Wetlands

The Contractor shall not enter, disturb, destroy, or allow discharge of contaminants into any wetlands.

3.3 AIR RESOURCES

Equipment operation, activities, or processes performed by the Contractor shall be in accordance with all Federal and State air emission and performance laws and standards.

3.3.1 Particulates

Dust particles; aerosols and gaseous by-products from construction activities; and processing and preparation of materials, such as from asphaltic batch plants; shall be controlled at all times, including weekends, holidays and hours when work is not in progress. The Contractor shall maintain excavations, stockpiles, haul roads, permanent and temporary access roads, plant sites, spoil areas, borrow areas, and other work areas within or outside the project boundaries free from particulates which would cause the Federal, State, and local air pollution standards to be exceeded or which would cause a hazard or a nuisance. Sprinkling, chemical treatment of an approved type, baghouse, scrubbers, electrostatic precipitators or other methods will be permitted to control particulates in the work area. Sprinkling, to be efficient, must be repeated to keep the disturbed area damp at all times. The Contractor must have sufficient, competent equipment available to accomplish these tasks. Particulate control shall be performed as the work proceeds and whenever a particulate nuisance or hazard occurs. The Contractor shall comply with all State and local visibility regulations.

3.3.2 Odors

Odors from construction activities shall be controlled at all times. The odors shall not cause a health hazard and shall be in compliance with State regulations and/or local ordinances.

3.3.3 Sound Intrusions

The Contractor shall keep construction activities under surveillance and control to minimize environment damage by noise.

3.3.4 Burning

Burning shall be prohibited on the Government premises.

3.3.5 Hydrocarbons and Carbon Monoxide

Hydrocarbons and carbon monoxide emissions from equipment shall be controlled to Federal and State allowable limits at all times.

3.4 MANAGEMENT AND DISPOSAL OF WASTE AND CHEMICAL MATERIALS

Management and disposal of wastes and chemical materials shall be as directed below, unless otherwise specified in other sections and/or shown on the drawings.

3.4.1 Solid Wastes

Solid wastes (excluding clearing debris) shall be placed in containers which are emptied on a regular schedule. Handling, storage, and disposal shall be conducted to prevent contamination. Segregation measures shall be employed so that no hazardous or toxic waste will become co-mingled with solid waste. The Contractor shall transport solid waste off Government property and dispose of it in compliance with Federal, State, and local

requirements for solid waste disposal. A Subtitle D RCRA permitted landfill shall be the minimum acceptable off-site solid waste disposal option. The Contractor shall verify that the selected transporters and disposal facilities have the necessary permits and licenses to operate.

3.4.2 Chemicals and Chemical Wastes

Chemicals shall be dispensed ensuring no spillage to the ground or water. Periodic inspections of dispensing areas to identify leakage and initiate corrective action shall be performed and documented. This documentation will be periodically reviewed by the Government. Chemical waste shall be collected in corrosion resistant, compatible containers. Collection drums shall be monitored and removed to a staging or storage area when contents are within 6 inches of the top. Wastes shall be classified, managed, stored, and disposed of in accordance with Federal, State, and local laws and regulations.

3.4.3 Contractor Generated Hazardous Wastes/Excess Hazardous Materials

Hazardous wastes are defined in 40 CFR 261, or are as defined by applicable State and local regulations. Hazardous materials are defined in 49 CFR 171 - 178. The Contractor shall, at a minimum, manage and store hazardous waste in compliance with 40 CFR 262 . The Contractor shall take sufficient measures to prevent spillage of hazardous and toxic materials during dispensing. The Contractor shall segregate hazardous waste from other materials and wastes, shall protect it from the weather by placing it in a safe covered location, and shall take precautionary measures such as berming or other appropriate measures against accidental spillage. The Contractor shall be responsible for storage, describing, packaging, labeling, marking, and placarding of hazardous waste and hazardous material in accordance with 49 CFR 171 - 178, State, and local laws and regulations. The Contractor shall transport Contractor generated hazardous waste off Government property within 60 days in accordance with the Environmental Protection Agency and the Department of Transportation laws and regulations. The Contractor shall dispose of hazardous waste in compliance with Federal, State and local laws and regulations. Spills of hazardous or toxic materials shall be immediately reported to the Contracting Officer and Minneapolis-St Paul IAP Environmental Office.. Cleanup and cleanup costs due to spills shall be the Contractor's responsibility. The disposition of Contractor generated hazardous waste and excess hazardous materials are the Contractor's responsibility.

3.4.4 Fuel and Lubricants

Storage, fueling and lubrication of equipment and motor vehicles shall be conducted in a manner that affords the maximum protection against spill and evaporation. Fuel, lubricants and oil shall be managed and stored in accordance with all Federal, State, Regional, and local laws and regulations. Used lubricants and used oil to be discarded shall be stored in marked corrosion-resistant containers and recycled or disposed in accordance with 40 CFR 279, State, and local laws and regulations. There shall be no storage of fuel on the project site. Fuel must be brought to the project site each day that work is performed.

3.4.5 Waste Water

Disposal of waste water shall be as specified below.

a. Waste water from construction activities, such as on site material

processing, concrete curing, foundation and concrete clean-up, water used in concrete trucks, forms, etc. shall not be allowed to enter water ways or to be discharged prior to being treated to remove pollutants. The Contractor shall dispose of the construction related waste water off-Government property in accordance with all Federal, State, Regional and Local laws and regulations.

b. Ground water is anticipitated to be encountered during construction. If ground water is encountered, the Contractor shall notify the Contracting Officer prior to pumping the ground water. For discharge of ground water, the Contractor shall surface discharge in accordance with all Federal, State, and local laws and regulations.

c. Water generated from the flushing of lines after disinfection or disinfection in conjunction with hydrostatic testing shall be land applied in accordance with all Federal, State, and local laws and regulations for land application or discharged into the sanitary sewer with prior approval and/or notification to the Waste Water Treatment Plant's Operator.

3.5 RECYCLING AND WASTE MINIMIZATION

The Contractor shall participate in State and local government sponsored recycling programs. The Contractor is further encouraged to minimize solid waste generation throughout the duration of the project.

3.6 HISTORICAL, ARCHAEOLOGICAL, AND CULTURAL RESOURCES

If during excavation or other construction activities any previously unidentified or unanticipated historical, archaeological, and cultural resources are discovered or found, all activities that may damage or alter such resources shall be temporarily suspended. Resources covered by this paragraph include but are not limited to: any human skeletal remains or burials; artifacts; shell, midden, bone, charcoal, or other deposits; rock or coral alignments, pavings, wall, or other constructed features; and any indication of agricultural or other human activities. Upon such discovery or find, the Contractor shall immediately notify the Contracting Officer so that the appropriate authorities may be notified and a determination made as to their significance and what, if any, special disposition of the finds should be made. The Contractor shall cease all activities that may result in impact to or the destruction of these resources. The Contractor shall secure the area and prevent employees or other persons from trespassing on, removing, or otherwise disturbing such resources.

3.7 BIOLOGICAL RESOURCES

The Contractor shall minimize interference with, disturbance to, and damage to fish, wildlife, and plants including their habitat. The Contractor shall be responsible for the protection of threatened and endangered animal and plant species including their habitat in accordance with Federal, State, Regional, and local laws and regulations.

3.8 INTEGRATED PEST MANAGEMENT

In order to minimize impacts to existing fauna and flora, the Contractor, through the Contracting Officer, shall coordinate with the Installation Pest Management Coordinator (IPMC) at the earliest possible time prior to

pesticide application. The Contractor shall discuss integrated pest management strategies with the IPMC and receive concurrence from the IPMC through the COR prior to the application of any pesticide associated with these specifications. Installation Pest Management personnel shall be given the opportunity to be present at all meetings concerning treatment measures for pest or disease control and during application of the pesticide. The use and management of pesticides are regulated under 40 CFR 152 - 186.

3.8.1 Pesticide Delivery and Storage

Pesticides shall be delivered to the site in the original, unopened containers bearing legible labels indicating the EPA registration number and the manufacturer's registered uses. Pesticides shall be stored according to manufacturer's instructions and under lock and key when unattended.

3.8.2 Qualifications

For the application of pesticides, the Contractor shall use the services of a subcontractor whose principal business is pest control. The subcontractor shall be licensed and certified in the state where the work is to be performed.

3.8.3 Pesticide Handling Requirements

The Contractor shall formulate, treat with, and dispose of pesticides and associated containers in accordance with label directions and shall use the clothing and personal protective equipment specified on the labeling for use during all phases of the application. Material Safety Data Sheets (MSDS)shall be available for all pesticide products.

3.8.4 Application

Pesticides shall be applied by a State Certified Pesticide Applicator in accordance with EPA label restrictions and recommendation. The Certified Applicator shall wear clothing and personal protective equipment as specified on the pesticide label. Water used for formulating shall only come from locations designated by the Contracting Officer. The Contractor shall not allow the equipment to overflow. Prior to application of pesticide, all equipment shall be inspected for leaks, clogging, wear, or damage and shall be repaired prior to being used.

3.9 PREVIOUSLY USED EQUIPMENT

The Contractor shall clean all previously used construction equipment prior to bringing it onto the project site. The Contractor shall ensure that the equipment is free from soil residuals, egg deposits from plant pests, noxious weeds, and plant seeds. The Contractor shall consult with the USDA jurisdictional office for additional cleaning requirements.

3.10 MAINTENANCE OF POLLUTION FACILITIES

The Contractor shall maintain permanent and temporary pollution control facilities and devices for the duration of the contract or for that length of time construction activities create the particular pollutant.

3.11 MILITARY MUNITIONS

In the event the Contractor discovers or uncovers military munitions as defined in 40 CFR 260, the Contractor shall immediately stop work in that area and immediately inform the Contracting Officer.

3.12 TRAINING OF CONTRACTOR PERSONNEL

The Contractor's personnel shall be trained in all phases of environmental protection and pollution control. The Contractor shall conduct environmental protection/pollution control meetings for all Contractor personnel prior to commencing construction activities. Additional meetings shall be conducted for new personnel and when site conditions change. The training and meeting agenda shall include: methods of detecting and avoiding pollution; familiarization with statutory and contractual pollution standards; installation and care of devices, vegetative covers, and instruments required for monitoring purposes to ensure adequate and continuous environmental protection/pollution control; anticipated hazardous or toxic chemicals or wastes, and other regulated contaminants; recognition and protection of archaeological sites, artifacts, wetlands, and endangered species and their habitat that are known to be in the area.

3.13 POST CONSTRUCTION CLEANUP

The Contractor shall clean up all areas used for construction in accordance with Contract Clause: "Cleaning Up". The Contractor shall, unless otherwise instructed in writing by the Contracting Officer, obliterate all signs of temporary construction facilities such as haul roads, work area, structures, foundations of temporary structures, stockpiles of excess or waste materials, and other vestiges of construction prior to final acceptance of the work. The disturbed area shall be graded, filled and the entire area seeded unless otherwise indicated.

-- End of Section --

This page was intentionally left blank for duplex printing.

Application for General Storm Water Permit for Construction Activity (#MNR110000)

Minnesota Pollution Control Agency
520 Lafayette Road North
St. Paul, MN 55155-4194

I. Construction Site Information

1. Name of project: _____

2. Brief description of where the construction activity occurs (please include address, if available):

_____

_____

3. Indicate ALL cities, counties, and townships where the construction activity will take place:

_____

_____

4. Name of waterbody(s) that will receive storm water from the construction site:

_____

_____

5. Project start date: _____ Project completion date: _____ Area to be disturbed by project: _____ (in acres)

II. Prerequisites for Applying for a Permit

For the following questions, please refer to the **NPDES General Storm Water Permit** (MNR110000)

A "**No**" answer for any question will result in this form being returned to the owner with no permit issued to authorize the construction activity. This application will need to be completed and returned to the MPCA before a permit to authorize the construction activity may be issued.

6. Has a **Temporary Erosion and Sediment Control Plan** been developed for this project in accordance with Appendix A and incorporated into this project's final plans and specifications? **Yes** ☐ **No** ☐

7. Has a **Permanent Erosion and Sediment Control Plan** been developed for this project in accordance with Appendix B and incorporated into this project's final plans and specifications? **Yes** ☐ **No** ☐

8. Has the Application Fee been enclosed? **Yes** ☐ **No** ☐

III. Owner Information

Name _____ Telephone _____

Address _____

City _____ State _____ Zip Code _____

Contact person _____ Telephone _____

IV. Owner Certification

I certify under penalty of law that this document and all attachments were prepared under my direction or supervision in accordance with a system designed to assure that qualified personnel properly gather and evaluate the information submitted. Based on my inquiry of the person, or persons, who manage the system, or those persons directly responsible for gathering the information, the information submitted is, to the best of my knowledge and belief, true, accurate, and complete (Minnesota Rules part 7001.0070).

I also certify under penalty of law that I have read, understood, and accepted all terms and conditions of the National Pollutant Discharge Elimination System (NPDES) General Storm Water permit (MNR110000) that authorizes storm water discharges associated with the construction site identified on the front side of this form.

I understand that as a permittee, I am legally accountable under the Clean Water Act to ensure compliance with the terms and conditions of the NPDES General Storm Water Permit (MNR110000).

I also understand that MPCA enforcement actions (pursuant to Minnesota Statutes sections 115.07, 116.072, and 609.71 and Section 309 of the Clean Water Act) may be taken against my company if the terms and conditions of the NPDES General Storm Water Permit (MNR110000) are not met.

Printed Name | Title (Manager, CEO, etc.)

Authorized Signature | Date

V. Certification

I certify under penalty of law that I have read, understood, and accepted all terms and conditions of the National Pollutant Discharge Elimination System (NPDES) General Storm Water permit (MNR110000) that authorizes storm water discharges associated with the construction site identified on this form.

I understand for Parts I.B. through I.E, Appendix C, and Appendix D of the General Storm Water Permit (MNR110000) I am becoming a co-permittee with the owner of the facility for which I have been contracted to perform professional construction services. As a co-permittee, I understand that my company is legally accountable, under the Clean Water Act, to ensure compliance with the terms and conditions of the General Storm Water Permit (MNR110000).

I also understand that MPCA enforcement actions (pursuant to Minnesota Statutes sections 115.07, 116.072, and 609.71 and Section 309 of the Clean Water Act) may be taken against my company if the terms and conditions of the NPDES General Storm Water Permit (MNR110000) for which I am a co-permittee, are not met.

Company or Firm | Telephone

Printed Name | Title (Manager, CEO, etc.)

Authorized Signature | Date

Address

City | State | Zip Code

Contact Person | Telephone

Submit to: MPCA, Metro District, Community and Area-wide Programs, 520 Lafayette Road North, St. Paul, Minnesota, 55155-4194

Notice of Termination

Termination of Coverage Under The National Pollutant Discharge Elimination System (NPDES) General Permit (MNR110000) for Storm Water Discharges Associated With A Construction Activity

Minnesota Pollution Control Agency
520 Lafayette Road North
St. Paul, MN 55155-4194

I. Construction Site Information

1. Name of project: _____
   For the following questions, please refer to the NPDES General Storm Water Permit (MNR110000).
2. Has the entire construction site undergone final stabilization? **Yes** ☐ **No** ☐
3. Are all maintenance activities required in Part I.E. of the Permit complete? **Yes** ☐ **No** ☐
4. Have all **Permanent Erosion and Sediment Control Best Management Practices** (to be used after construction is complete) been installed in accordance with Appendix B of the Permit? **Yes** ☐ **No** ☐

A "No" to any of the above will result in this request for termination being denied.

II. Owner Information

Name _____ Telephone _____

Address _____

City _____ State _____ Zip Code _____

Contact Person _____ Telephone _____

Project Identification Number: _____

III. Owner Certification

"I understand that, as a permittee, I am legally accountable under the Clean Water Act to ensure compliance with the terms and conditions of the NPDES General Storm Water Permit (MNR110000)."

"I understand that by submitting this Notice of Termination I am no longer authorized to discharge storm water associated with the construction activity identified on this form under the terms and condition of the NPDES General Storm Water Permit (MNR110000), and that discharging storm water associated with a construction activity to waters of the state is unlawful under the Clean Water Act unless the discharge is authorized by an NPDES permit. I understand the submittal of this Notice of Termination does not release my company or agency from liability for any violations of the NPDES General Storm Water Permit (MNR110000) or the Clean Water Act."

"I certify under penalty of law that the answers to the questions in Section I, 'Construction Site Information', above, are true and correct, and this information is based on my own assessment, or on my inquiry of the person or persons responsible for gathering the information."

Printed Name _____ Title (Manager, CEO, etc.) _____

Authorized Signature _____ Date _____

Printed on recycled paper containing at least 20% fibers from paper recycled by consumers.

IV. General Contractor Certification

"I understand that, as a permittee, I am legally accountable under the Clean Water Act to ensure compliance with the terms and conditions of the NPDES General Storm Water Permit (MNR110000)."

"I understand that by signing this Notice of Termination I am no longer authorized to discharge storm water associated with the construction activity identified on this form under the terms and condition of the NPDES General Storm Water Permit (MNR110000), and that discharging storm water associated with a construction activity to waters of the state is unlawful under the Clean Water Act unless the discharge is authorized by an NPDES permit. I understand the submittal of this Notice of Termination does not release my company from liability for any violations of the NPDES General Storm Water Permit (MNR110000) or the Clean Water Act."

"I certify under penalty of law that the answers to the questions in Section I, 'Construction Site Information', above, are true and correct, and this information is based on my own assessment, or on my inquiry of the person or persons responsible for gathering the information."

Company or Firm	Telephone	
Printed Name	Title (Manager, CEO, etc.)	
Authorized Signature	Date	
Address		
City	State	Zip Code
Contact Person	Telephone	

Submit to: MPCA, Metro District, Community and Area-wide Programs, 520 Lafayette Road North, St. Paul, MN 55155-4194

Instructions for completing a Notice of Termination

This Notice of Termination means the permittees identified on this form are terminating coverage under the NPDES General Storm Water Permit (MNR110000) for construction activities.

Section I - Construction Site Information

1. List the construction project's name. If the project does not have a name, list the type of project and a brief description (e.g. "I-35E/I-494 Interchange" or "Highway 169 bridge replacement (#79605) at the Rum River").

   For **questions 2, 3 and 4,** please refer to the NPDES General Storm Water Permit (MNR11000)

2. Indicate if the entire construction site has undergone **final stabilization** (see "Definitions", i.e. page 16 of the permit) by answering "Yes" or "No".

3. Indicate if all maintenance activities required in Part I.E. are complete (see pages 7-8 of the permit) by answering "Yes" or "No".

4. Indicate if all **Permanent Erosion and Sediment Control** BMPs to be used after the project is complete have been installed in accordance with Appendix B (see pages 11-12 of the permit) by answering "Yes" or "No".

   A "No" answer to **questions 2, 3 or 4** will result in this request for termination being denied by the MPCA.

Section II - Owner Information

Provide the name, telephone number, address, city, state, and zip code of the owner of the company, organization, or other entity for which the construction project in Section I is being done. The owner is the party responsible for the **design** of the temporary and permanent Erosion and Sediment Control Plans and overall **management** of the project's operations (for example, Stearns County Highway Department, City of Duluth, Summit Developers Inc., etc). The contact person should be the owner's representative in charge of the project (for example, Sandy Smith, County Engineer; Joe Smith, Project Manager; etc).

The "Project Identification Number" is the nine-digit number taken from the project's "Notice of Storm Water Permit Coverage" card.

Section III - Owner Certification

The Notice of Termination must be signed by either a principal executive officer, vice president, representative agent responsible for overall operations, general partner, or a proprietor. If the activity is being conducted by a unit of government (state, county, municipality, or township) the Notice of Termination must be signed by a principal executive officer, ranking elected official, administrator, manager, coordinator, or engineer. (For additional information, see Minnesota Rules 7001.0060.) Print the name of the individual signing the form, his or her title, and the date of signature.

Continued on back

Instructions for completing a Notice of Termination *(Continued)*

Section IV - General Contractor Certification

After the Notice of Termination has been completed by the owner, the general contractor must certify it with a signature from an individual authorized to sign the form. The Notice of Termination must be signed by either a principal executive officer, vice president, representative agent responsible for overall operations, general partner, or a proprietor. If the general contractor is a unit of government (state, county, municipality, or township) the Notice of Termination must be signed by a principal executive officer, ranking elected official, administrator, manager, coordinator, or engineer. (For additional information reference Minnesota Rules 7001.0060.) After signing, print the name of the person signing the Notice of Termination, title, and date of signature. The contact person should be the general contractor's representative in charge of the project (for example, Jim Williams, Head Foreman; Ann Johnson, Project Manager, etc). In the cases where one company or agency signed both certifications on the original permit application form acting as the owner and the general contractor, the company or agency should do the same on this form.

Send the Notice of Termination form to:

Minnesota Pollution Control Agency
Metro District, Community and Area-wide Programs
520 Lafayette Road North
St. Paul, Minnesota 55155-4194

Minnesota Pollution Control Agency

GENERAL PERMIT

AUTHORIZATION TO DISCHARGE

STORM WATER ASSOCIATED WITH A CONSTRUCTION

ACTIVITY UNDER THE NATIONAL POLLUTANT DISCHARGE ELIMINATION

SYSTEM/STATE DISPOSAL SYSTEM PERMIT PROGRAM

ISSUANCE DATE: September 4, 1998 EXPIRATION DATE: September 3, 2003

In compliance with the provisions of the Clean Water Act, as amended, (33 U.S.C. 1251 et seq.; hereinafter, the "**Act**"), 40 CFR 122, 123, and 124, as amended, et seq.; Minnesota Statutes Chapters 115 and 116, as amended, and Minnesota Rules Chapter 7001;

This permit establishes conditions for discharging storm water to waters of the state from construction activities which disturb five or more acres of total land area.

This permit DOES NOT authorize:

1) Discharges or releases that are not **storm water** as defined on Page 18 (see "Prohibitions" on Page 14 of this permit).

2) The placement of fill into **waters of the state**.

Unless notified by the **Agency** to the contrary, applicants who submit a complete **application** form in accordance with the requirements of this **permit** are authorized to discharge **storm water** from construction sites under the terms and conditions of this **permit** 48 hours after the date the application is postmarked.

Coverage under this permit will remain in effect until construction is complete, the site has undergone **final stabilization**, all maintenance activities required in Part I.E. have been completed, and the **Permittee** has submitted a **Notice of Termination**, regardless of the above expiration date.

Signature:_____

John N. Holck, Manager	*for*	Peder A. Larson
Nonpoint Source Compliance Section		Commissioner
Water Quality Division		Minnesota Pollution Control Agency

If you have questions on this permit, including the specific permit requirements, permit reporting or permit compliance status, please contact:

Minnesota Pollution Control Agency
Metro District/Community & Area-wide Programs
520 Lafayette Road North
St. Paul, MN 55155-4194
Telephone (651) 296-3890
Fax (651) 297-8701

Table of Contents

Page

I. REQUIREMENTS OF THIS PERMIT 3

A) Prerequisites for Submitting a Permit Application 3
B) Application for Coverage 3
C) Records to be Kept On Site 4
D) Erosion and Sediment Control During Construction 5
1) Erosion Control 5
2) Sediment Control 6
E) Inspections and Maintenance 7
F) Duration of Permit Coverage 8
G) Appendices Incorporated by Reference 8

II. APPENDICES

APPENDIX A - TEMPORARY EROSION AND SEDIMENT CONTROL PLAN
A) Goal 9
B) Assigning Responsibilities 9
C) Plan Contents 9
D) Final Plans and Specifications 10
E) Plan Retention 10
F) Changes to the Temporary Erosion and Sediment Control Plan 10

APPENDIX B - PERMANENT EROSION AND SEDIMENT CONTROL PLAN
A) Goal 11
B) Assigning Responsibilities 11
C) Plan Contents. 11
D) Final Plans and Specifications 13
E) Plan Retention 13
F) Changes to the Permanent Erosion and Sediment Control Plan 13

APPENDIX C - PROVISIONS
A) Applicability Criteria 14
B) MPCA Address 14
C) Response 14
D) Authorized Discharges 14
E) Prohibitions 14
F) Definitions 15

APPENDIX D - RESPONSIBILITIES
A) Transfer Ownership of Control 19
B) Permit Modification 19
C) Right of Entry 19
D) Civil and Criminal Liability 20
E) Oil and Hazardous Substance Liability 20
F) Liability Exemption 20
G) Minnesota Laws 20
H) Property Rights 20
I) Severability 20
J) NPDES/SDS Rules 21
K) Other Statutes, Rules, and Ordinances 21
L) More Stringent Rules 21
M) Agency Obligation 21

I. REQUIREMENTS OF THIS PERMIT

A. PREREQUISITES FOR SUBMITTING A PERMIT APPLICATION

Failure to complete the following prerequisites prior to submitting the **application** will result in the **application** being returned, and the construction project NOT authorized by this **permit**.

1. The **owner** must develop a Temporary **Erosion** and **Sediment Control** Plan in accordance with "Appendix A." The plan requirements must be incorporated into the project's **final plans and specifications** and implemented as part of the project.

2. The **owner** must develop a Permanent Erosion and Sediment Control Plan in accordance with "Appendix B." The plan requirements must be incorporated into the project's **final plans and specifications** and implemented as part of the project.

The above plans are NOT to be submitted to the Agency but are to be retained by the owner in accordance with Appendices A and B; "Plan Retention."

B. APPLICATION FOR COVERAGE

1. The **owner** and **general contractor** are responsible for submitting a completed **application** form (or a photocopy thereof) to the Minnesota Pollution Control Agency (MPCA) for each project which disturbs five (5) or more acres of land.

2. The **owner** who signs the **application** is responsible for compliance with all terms and conditions of this **permit**. The **general contractor** who signs the **application** is a Co-Permittee for Parts I.B. through I.E., Appendix C, and Appendix D of this **permit** and is responsible for compliance with those portions of this **permit**.

3. This permit will become effective 48 hours after the postmarked date of the completed **application** form containing "Yes" responses to questions 6, 7, and 8. A "No" response to question 6, 7, or 8 will result in the application being returned to the owner, and no permit will be issued to authorize the construction. No construction which requires an NPDES permit may commence unless authorized by an NPDES permit.

4. Permittees will receive a "Notice of Storm Water Permit Coverage" card acknowledging permit coverage within 30 days of the postmarked date of the completed **application**. (See I.D.3. for posting requirements.) A photocopy of this card must be provided by the **owner** to the **local permitting authority**, where applicable, within 14 days of receipt.

C. RECORDS

1. The project's **final plans and specifications** which incorporate the requirements of the Temporary Erosion and Sediment Control Plan and Permanent Erosion and Sediment Control Plan must be:

   a. available at the construction site in either the field office, or, inspector's vehicle, or contractor's vehicle, and,

   b. available to federal, state, and local officials (in accordance with Appendix D, Subpart C) for inspection for the duration of this permit.

2. The following plans/records must be made available to federal, state and local officials within 24 hours of request (in accordance with Appendix D, Subpart C.) for the duration of the permit:

   a. Temporary Erosion and Sediment Control Plan developed in accordance with Part I.A.1. (if a separate document from the project's **final plans and specifications**).

   b. Permanent Erosion and Sediment Control Plan developed in accordance with Part I.A.2.

   c. Records of all inspections (see Part I.E.). Records shall include:

      1) Date and time of inspections;
      2) Findings of inspections;
      3) Corrective actions taken (including dates and times); and
      4) Documentation of changes to the Temporary Erosion and Sediment Control Plan made during construction.

   d. Date of all rainfall events.

3. The "Notice of Storm Water Permit Coverage" card shall be posted at any of the following locations:

   a. construction site entrance and visible from the nearest public roadway;
   b. visible from the nearest public roadway, where no construction site entrance exists;
   c. field office (if applicable); and
   d. for linear utility and noncontiguous municipal projects, at the office responsible for project administration.

D. EROSION AND SEDIMENT CONTROL DURING CONSTRUCTION

1. **Erosion Control**

a. The **Permittee(s)** shall use, where possible, horizontal slope grading, construction phasing, and other construction practices that minimize **erosion**.

b. Unless precluded by snow cover, all **exposed soil areas*** with a continuous positive slope within 100 lineal feet from a **water of the state**, or from a curb, gutter, storm sewer inlet, temporary or permanent drainage ditch or other **storm water** conveyance system, which is connected to a water of the state, shall have **temporary protection** or **permanent cover** for the **exposed soil areas** within the following time frames:

Type of Slope	Temporary protection or permanent cover where the area has not been, or will not be, worked by the contractor for:
Steeper than 3:1	7 days
10:1 to 3:1	14 days
Flatter than 10:1	21 days

* For the purposes of this provision, **exposed soil areas** do not include stockpiles or surcharge areas of sand, gravel, aggregate, concrete or bituminous.

c. The bottom of any temporary or permanent drainage ditch constructed to drain water from a construction site must be stabilized within 100 lineal feet from a water of the state. Stabilization must be initiated within 24 hours of connecting the drainage ditch to **a water of the state**, existing gutter, storm sewer inlet, drainage ditch, or other **storm water** conveyance system which discharges to **waters of the state** and completed within five calendar days.

d. Prior to connecting any pipe to a **water of the state** or drainage ditch, the pipe's outlet must be provided with temporary or permanent **energy dissipation** to prevent erosion.

2. **Sediment Control**

a. **Sediment control best management practices (BMPs)**, which prevent **sediment** from entering a **water of the state**, gutter, storm sewer inlet, ditch or other storm water conveyance system, shall be established on all downgradient perimeters before any upgradient land disturbing activities begin, and shall remain in place until final stabilization has been established.

b. The Permittee shall minimize vehicle tracking of **sediment** or **soil** off site at locations where vehicles exit the construction site onto **paved surfaces**.

c. Where 10 or more contiguous acres of **exposed soil** are contributing to a discernible point of **discharge**, temporary sedimentation basins* must be provided prior to the runoff leaving the construction site or entering **waters of the state**.

These sedimentation basins shall comply with the following:

1) Basins shall provide 1800 ft^3 per acre drained of hydraulic storage below the outlet pipe. For roadways, the use of adjacent drainage ditches with riser pipes to accomplish this is acceptable.
2) Basin outlets shall be designed to prevent short circuiting and the **discharge** of floating debris. The outlet should consist of a perforated riser pipe wrapped with filter fabric and covered with crushed gravel. The perforated riser pipe should be designed to allow complete basin drawdown.

* While recommended, this provision will not be required for:

1) work on existing roadways where the 10-acre disturbed common drainage area is served by an existing storm sewer which is daylighted off the road's right-of-way; **or**
2) proximity to bedrock or vertical relief precludes it; **or**
3) final stabilization will be established within 30 days of the initiation of construction activity.

E. INSPECTIONS AND MAINTENANCE

1. Except where work has been suspended due to frozen ground conditions, the **Permittee(s)** shall inspect the construction site once every seven (7) days and within 24 hours after every rain event, which results in runoff leaving the construction site or entering **waters of the state**. The **Permittee** shall investigate and comply with the following inspection and maintenance requirements:

   a. Inspection Requirement: All **erosion** and perimeter **sediment control BMPs** to ensure integrity and effectiveness.

      Maintenance Requirement: All nonfunctional perimeter **sediment control BMPs** shall be repaired when the sediment reaches 1/3 of the height, or replaced, or supplemented with functional **BMPs** within 24 hours of discovery. All nonfunctional **erosion control BMPs** shall be repaired, replaced, or supplemented with functional **BMPs** as soon as field conditions allow access.

   b. Inspection Requirement: All temporary sedimentation basins to ensure effectiveness.

      Maintenance Requirement: When the depth of sediment collected in the basin reaches 1/2 the height of the riser, or 1/2 the storage volume, the basin shall be drained and the sediment removed. Drainage and removal shall be completed within 72 hours of discovery, or as soon as field conditions allow access.

   c. Inspection Requirement: Drainage ditches and other **waters of the state** for evidence of **sediment** leaving the site.

      Maintenance Requirement: Unless the project has received approval or certification for depositing fill into waters of the state, the **Permittee** shall remove all deltas and **sediment** deposited in drainage ways, catch basins, or **waters of the state**, and restabilize the areas where **sediment** removal results in **exposed soil**. The removal and stabilization shall take place within seven (7) days of discovery unless precluded by legal, regulatory, or physical access restraints. If precluded, removal and stabilization must take place within seven calendar days of obtaining access. The Permittee is responsible for contacting all local, regional, state and federal authorities prior to working in waters of the state, and receiving any applicable permits.

d. Inspection Requirement: Construction site vehicle exit locations for evidence of off-site **sediment** tracking onto paved **surfaces**.

Maintenance Requirement: Tracked **sediment** shall be removed from paved **surfaces**, which do not drain back into the construction site, within 24 hours of discovery.

2. Where parts of the construction site have undergone **final stabilization**, but work remains on other parts of the site, inspections of the stabilized areas may be reduced to once per month.

3. Where work has been suspended due to frozen ground conditions, the inspections and maintenance required in Part I.E.1. above shall take place as soon as weather conditions warrant or prior to resuming construction.

4. Unless required to remain in place by the **owner** or **local permitting authority**, all temporary synthetic, structural, and nonbiodegradable **erosion** and **sediment control BMPs** shall be removed after the site has undergone **final stabilization**.

5. After the entire project has undergone **final stabilization**, all temporary sedimentation basins to be used as permanent water quality management basins must be cleaned out by the **Permittee** to provide the sediment storage capacity required in Part I.D.2.c.2. **Permittees** are responsible for the maintenance of water quality management **BMPs** until construction is complete, the site has undergone **final stabilization**, and a **Notice of Termination** has been submitted to the **Agency**.

F. DURATION OF PERMIT COVERAGE

The **owner** and **general contractor** are responsible for complying with their respective portions of this permit until construction is complete, all maintenance activities required in Part I.E. are complete, the site has undergone **final stabilization** and a **Notice of Termination** is submitted to the **Agency**.

G. APPENDICES INCORPORATED BY REFERENCE

Appendices A, B, C, and D are incorporated into this permit by reference and are made both integral and enforceable parts of this permit.

APPENDIX A

TEMPORARY EROSION AND SEDIMENT CONTROL PLAN

(Completed prior to submittal of an application)

A. GOAL: The goal of the Temporary Erosion and Sediment Control Plan is to prevent **sediment** from entering **waters of the state** during construction. The **owner** shall incorporate **Best Management Practices (BMPs)** into the project's **final plans and specifications**, which are designed to meet this goal and comply with Parts I.D. and I.E. of this **permit**. While the general requirements are identified in Parts I.D. and I.E. of this **permit**, it is the **owner's** responsibility to select the appropriate **BMPs** which satisfy these requirements.

B. ASSIGNING RESPONSIBILITY

When developing bidding documents or other contracts, the **owner** must identify who will implement and manage the **erosion** and **sediment control BMPs** before and during construction; and ensure that the plan will be implemented and stay in effect until the construction project is complete, the entire site has undergone **final stabilization**, and a **Notice of Termination** has been submitted to the Agency. In addition, the **final plans and specifications** must clearly identify who will be responsible for the maintenance requirements identified in Part I.E. of this permit.

C. PLAN CONTENTS

The Temporary **Erosion** and **Sediment Control** Plan, if developed as a document separate from the project's **final plans and specifications**, must be prepared for the proposed project. The plan must contain appropriate **BMPs** which comply with Parts I.D. and I.E. of this permit and contain **standard plates** and/or specifications of these **BMPs**.

1. **Standard plates** and/or specifications must be provided for all **BMPs**, selected by the designer to be used on the project, and at a minimum, must include the following:

   a. perimeter sediment control; and
   b. placement and type of **temporary cover.**

2. Where applicable, **standard plates** and/or specifications must also be provided for the following:

   a. horizontal slope grading;
   b. proposed stabilized vehicle entrances;
   c. temporary sedimentation basins;
   d. storm sewer pipe outlet energy dissipation;
   e. storm sewer inlet control; and
   f. **erosion** and **sediment control** requirements for stockpile areas.

D. FINAL PLANS AND SPECIFICATIONS

The above **standard plates** and/or specifications are to be incorporated into the project's **final plans and specifications**. In addition, the **final plans and specifications** shall clearly denote:

1. Location and type or the procedures to establish the location and type of all **erosion** and **sediment control BMPs**.

2. Existing and final grades, including dividing lines and direction of flow for all **storm water** runoff drainage areas located within the project limits.

3. Locations of areas not to be disturbed or areas where construction will be staged to minimize duration of **exposed soil areas**.

4. All **waters of the state**, including existing wetlands identified on the National Wetlands Inventory Map, within one-half mile from the exposed construction area which will receive direct **storm water** runoff from the construction site during construction.

   Where waters of the state, including wetlands, which will receive the direct runoff will not fit on a plan sheet, they shall be identified with an arrow, indicating both direction and distance.

5. Timing for installation of all **erosion** and **sediment control BMPs** required in Part I.D.

E. PLAN RETENTION

The owner shall keep a copy of the Temporary **Erosion** and **Sediment Control** Plan and all changes to it for three years after completion of the construction project.

F. CHANGES TO THE TEMPORARY EROSION AND SEDIMENT CONTROL PLAN

Changes in the plan made during construction to accommodate phased construction, sequenced work, timing issues, or changed site conditions are allowable provided Parts I.D. through I.E. are complied with.

APPENDIX B

PERMANENT EROSION AND SEDIMENT CONTROL PLAN

(Completed prior to submitting an application)

A. GOAL: The goal of the Permanent Erosion and Sediment Control Plan is to protect Minnesota's water resources from pollutants generated from a project's ultimate development's impervious surfaces, change in land use, or changed ground cover.

B. ASSIGNING RESPONSIBILITY

When developing bidding documents or other contacts, the **owner** must identify who will maintain the water quality management **BMPs** until construction is complete, all maintenance activities required in Part I.E. are complete, the site has undergone **final stabilization**, and a **Notice of Termination** has been submitted to the **Agency**.

C. PLAN CONTENTS

The Permanent Erosion and Sediment Control Plan must be prepared for the proposed project, and may be developed as a separate document from the **final plans and specifications**. The plan must contain appropriate **BMPs** which satisfy the above goal, and contain **standard plates** and/or specifications of these **BMPs.** These **standard plates** and specifications must be incorporated into the project's **final plans and specifications**. At a minimum, the plan must contain:

1. Land feature changes (in acres) for both **before** and **after** construction:

   a. Total project area;
   b. Total **impervious surface** area of project;
   c. Total pervious area of project;
   d. Total estimated **impervious surface** area of ultimate development; and
   e. Total estimated pervious area of ultimate development.

2. **Standard plates** and/or specifications of permanent erosion and sediment control BMPs below (Appendix B. C. 2a. 2b. and 2c.):

   a. **Sediment Control**
   Where a project's ultimate development replaces surface vegetation with one or more acres of cumulative impervious surface and all runoff has not been accounted for in a local unit of government's existing storm water management plan or practice, the runoff shall be discharged to a wet sedimentation basin***** prior to entering waters of the state.

      1) Proposed Development

      Except as provided in 2) below ("Reconstruction or Work on Existing Roadways"), the wet sedimentation basin shall be based on the project's ultimate development and comply with the following requirements:

a) The basin's hydraulic volume shall be sufficient to capture a 1/2 inch of runoff from the impervious watershed area.
b) Basins shall also provide a minimum of 250 $ft.^3$ dead sediment storage volume below the basin's hydraulic volume/impervious acre drained.
c) Basin inlets shall be placed above the sediment storage volume.
d) Basin outlets shall be designed to remove all suspended solids greater than five microns with a settling velocity of 1.3×10^{-4} ft/sec.
e) Basin outlets shall also be designed to prevent short circuiting and the discharge of floating debris.
f) Basins must provide spillways to accommodate storm events in excess of the basin's hydraulic design.

2) Reconstruction or Work on Existing Roadways

* While recommended, the above provision (Appendix B.C.2a.) will not be required for work on existing roadways where:
1) the drainage area is served by an existing storm sewer which is daylighted off the road's right-of-way **or**,
2) proximity to bedrock or vertical relief precludes it, **or**,
3) existing right-of-way precludes it.

For these situations, however, the **owner** will be required to incorporate other sedimentation or treatment devices (i.e., grass swales, smaller sediment basins, etc.).

b. **Permanent Erosion Control**

1) All drainage ditches constructed to drain water from the site after construction is complete must be **stabilized**.

2) All pipe outlets must be provided with permanent **energy dissipation** where the pipe's outlet velocity will exceed the permanent cover's erosive velocity.

c. Treatment
The **owner** is required to provide treatment of storm water through the use of **BMPs** such as grass swales, wetlands constructed for the purpose of treating **storm water**, and the planting or development of emergent vegetation around the perimeter of the wet sedimentation basin's **sediment** storage volume.

D. FINAL PLANS AND SPECIFICATIONS

The above standard plates and/or specifications are to be incorporated into the project's final plans and specifications. In addition, the final plans and specifications shall clearly denote:

1. Location and type of all permanent erosion and sediment control BMPs (Appendix B.C.2a., 2b. and 2c.).

2. The plan sheets must clearly identify all **waters of the state**, including wetlands identified on the National Wetlands Inventory Map within and one-half mile from the construction area which will receive direct **storm water** runoff from the construction site after construction is complete.

   Where the **waters of the state** which will receive the direct runoff and will not fit on the plan sheet, the resource shall be identified with an arrow, indicating both direction and distance.

3. Methods to be used for final stabilization of all exposed soil areas. For linear utility and roadway projects, final stabilization is not required on agricultural land which will be tilled within one year of project completion.

E. PLAN RETENTION

The owner shall keep a copy of the Permanent Erosion and Sediment Control Plan and all changes to it for three years after completion of the construction project.

F. CHANGES TO THE PERMANENT EROSION AND SEDIMENT CONTROL PLAN

Changes in the plan made during construction to accommodate changed site conditions are allowable provided all of Appendix B. is complied with.

APPENDIX C

PROVISIONS

A. APPLICABILITY CRITERIA

1. This permit covers storm water discharges associated with a construction activity which disturb **five (5) or more acres of land** in all areas of the state of Minnesota, except for agricultural/ silvicultural activities.

2. This is a National Pollutant Discharge Elimination System/State Disposal System general permit.

3. If the Commissioner determines that storm water discharges associated with a construction activity, or other activities, are contributing to a violation of a water quality standard or would be more appropriately regulated by an individual permit, the Commissioner may require a Permittee to be covered by an individual storm water discharge permit. The Commissioner may require a Permittee to develop and implement specific best management practices. Upon issuance of an individual permit, this general permit would no longer apply.

4. A permit applicant, or Permittee, may request an individual permit.

B. MPCA ADDRESS

Submit all forms, correspondence, reports, etc. to the following address:

Minnesota Pollution Control Agency
Metro District/Community & Area-wide Programs
Attn: Construction Activity Storm Water Program
520 Lafayette Road North
St. Paul, Minnesota 55155-4194

C. RESPONSE

The Permittee shall respond to Agency requests for submittal of temporary and permanent erosion and sediment control plans and water quality management plans, certificates, reports, records, or other information required by this permit. Upon request, the Permittee shall also provide a copy of this information to the local permitting authority and municipal storm sewer operator.

D. AUTHORIZED DISCHARGES

All discharges of storm water associated with a construction activity shall be composed entirely of storm water.

E. PROHIBITIONS

Discharges of any material other than storm water, such as vehicle and equipment maintenance spills, wash water, oil and other hazardous substances are prohibited by this permit.

F. DEFINITIONS

1. "**Act**" means the Clean Water Act (formerly the Federal Water Pollution Control Act), United States Code, Title 33, Sections 1251 et seq., as amended.

2. "**Agency**" means the Minnesota Pollution Control Agency (MPCA).

3. "**Application**" means a completed application for activities regulated by this permit. Application forms are available from the Agency.

4. "**Best Management Practices (BMPs)**" means erosion and sediment control and water quality management practices that are the most effective and practicable means of controlling, preventing, and minimizing degradation of surface water, including construction-phasing, minimizing the length of time soil areas are exposed, prohibitions, and other management practices published by state or designated areawide planning agencies.

   Examples of BMPs can be found in **Protecting Water Quality in Urban Areas**, Minnesota Pollution Control Agency 1989, and **Storm Water Management for Construction Activities: Developing Pollution Prevention Plans and Best Management Practices**, U.S. Environmental Protection Agency 1992 as a reference for BMPs, and **Erosion Control Design Manual**, Minnesota Department of Transportation, et al., 1993.

5. "**Construction Activity**" means a disturbance to the land that results in a change in the topography, existing soil cover (both vegetative and nonvegetative), or the existing soil topography which may result in accelerated storm water runoff, leading to soil erosion and movement of sediment into waters of the state. Examples can include clearing, grading, filling and excavating.

6. "**Discharge**" means the conveyance, channeling, runoff, or drainage, of storm water, including snow melt, from a construction site.

7. "**Energy Dissipation**" means methods employed at pipe outlets to prevent erosion. Examples include, but are not limited to; aprons, riprap, splash pads, and gabions which are designed to prevent erosion.

8. "**Erosion**" means the wearing away of soil by rainfall, surface water runoff, wind, or ice movement.

9. "**Erosion Control**" means methods employed to prevent erosion. Examples include soil stabilization practices, horizontal slope grading, temporary or permanent cover, and construction phasing.

10. "**Exposed Soil Areas**" means all areas of the construction site where the perennial vegetation (including trees, shrubs, and brush) has been removed. This includes topsoil stockpile areas, borrow areas and disposal areas within the construction site.

11. "**Final Plans and Specifications**" means the reports, prints, drawings, written descriptions, and clear technical requirements necessary to build a project used by the owner for the purposes of entering into a construction contract.

12. "**Final Stabilization**" means that all soil disturbing activities at the site have been completed, and that a uniform perennial vegetative cover with a density of 70 percent of the cover for unpaved areas and areas not covered by permanent structures has been established or equivalent permanent stabilization measures have been employed. Examples of vegetative cover practices can be found in Supplemental Specifications to the 1988 Standard Specifications for Construction (Minnesota Department of Transportation, 1991).

13. "**Five or more acres of total land area**" means any project that disturbs at least five acres of land measured by the project's construction corridor, excluding areas staked as not to be disturbed. If the project is less than five acres, but is part of larger common plan of development or sale (where multiple separate and distinct construction activities may be taking place at different times on different schedules but under one plan), it is defined as "five acres or more of total land area."

14. "**General Contractor**" means the party who signs the construction contract with the owner to construct the entire project described in the final plans and specifications. Where the construction project involves more than one contractor, the general contractor will be the party responsible for managing the entire project on behalf of the owner. In some cases, the owner may be the general contractor. In these cases, the owner will sign the permit application as the general contractor and would become the sole permittee.

15. "**Impervious Surface**" means a constructed hard surface that either prevents or retards the entry of water into the soil and causes water to run off the surface in greater quantities and at an increased rate of flow than prior to development. Examples include rooftops, sidewalks, patios, driveways, parking lots, storage areas, and concrete, asphalt, or gravel roads.

16. "**Local Permitting Authority**" means the township, county, municipality, conservation district, watershed district, watershed management organization, or other public entity which has the authority to review and approve construction activities.

17. "**Local Unit of Government's Existing Storm Water Management Plan or Practice**" means plans or practices developed by the local permitting authority under state law for the purposes of protecting water quality.

18. "**National Pollutant Discharge Elimination System (NPDES)**" means the program for issuing, modifying, revoking, reissuing, terminating, monitoring, and enforcing permits under the Clean Water Act (Sections 301, 318, 402, and 405) and United States Code Title 33, Sections 1317, 1328, 1342, and 1345.

19. "**Notice of Termination**" means notice to terminate coverage under this permit after construction is complete, the site has undergone stabilization, and all conditions of this permit have been satisfied. Notice of Termination forms are available from the Agency.

20. "**Owner**" means the person or party possessing the title of the land on which the construction activities will occur; or if the construction activity is for a lease holder, the party or individual identified as the lease holder; or the contracting government agency responsible for the construction activity.

21. "**Permanent Cover**" means final stabilization. Examples include grass, gravel, asphalt, and concrete.

22. "**Paved Surface**" means a constructed hard, smooth surface made of asphalt, concrete or other pavement material. Examples include, but are not limited to, roads, sidewalks, driveways and parking lots.

23. "**Permit**" means a National Pollutant Discharge Elimination System/ State Disposal System (NPDES/SDS) permit.

24. "**Permittee**" means a person, firm, or governmental agency or other institution who signs the application submitted to the Agency and is responsible for compliance with the terms and conditions of this permit.

25. "**Runoff Coefficient**" means the fraction of total precipitation that is not infiltrated into or otherwise retained by the soil, concrete, asphalt or other surface upon which it falls that will appear at the conveyance as runoff.

26. "**Sediment**" means the product of an erosion process; solid material both mineral and organic, that is in suspension, is being transported, or has been moved by water, air, or ice, and has come to rest on the earth's surface either above or below water level.

27. "**Sediment Control**" means methods employed to prevent sediment from leaving the site. Sediment control practices include silt fences, sediment traps, earth dikes, drainage swales, check dams, subsurface drains, pipe slope drains, storm drain inlet protection, and temporary or permanent sedimentation basins.

28. "**Soil**" means the unconsolidated mineral and organic mineral material on the immediate surface of the earth.

29. "**Stabilized**" means the exposed ground surface has been covered by staked sod, riprap, wood fiber blanket, or other material which prevents erosion from occurring. Grass seed is not stabilization.

30. "**Standard Plates**" means general drawings having or showing similar characteristics or qualities that are representative of a construction practice or activity.

31. "**Storm water**" means the precipitation runoff, storm water runoff, snow melt runoff, and any other surface runoff and drainage (defined in 40 CFR 122.26 [b][13]). Storm water does not include construction site dewatering.

32. "**Temporary Protection**" means methods employed to prevent erosion. Examples of temporary include; straw, wood fiber blanket, wood chips, and erosion netting.

33. "**Waters of the State**" means all streams, lakes, ponds, marshes, wetlands, watercourses, waterways, drainage systems and all other bodies or accumulations of waters, natural or artificial, public or private, which are contained within, flow through, or border upon the state or any portions thereof. Waters of the state do not include storm water detention basins, or wetlands constructed for the purposes of treating storm water, which do not discharge to surface waters.

APPENDIX D

RESPONSIBILITIES

A. TRANSFER OWNERSHIP OR CONTROL

This permit may not be assigned or transferred by the permit holder. Where a new general contractor is selected after the submittal of an application, or where the general contractor changes, a new application must be, in accordance with Part I.B., submitted to the Agency at least 48 hours prior to when the general contractor begins work at the site.

B. PERMIT MODIFICATION

After notice and opportunity for a hearing, this permit may be modified, suspended, or revoked in whole or in part during its term for cause including, but not limited to, the following:

1. Violation of any terms of this permit;

2. Obtaining this permit by misrepresentation or failure to disclose fully all relevant facts; or

3. A change in any condition that requires either a temporary or permanent reduction or elimination of the authorized discharge; or

4. Minn. Rules pts. 7001.0170 and 7001.0180.

C. RIGHT OF ENTRY

The Permittee shall, pursuant to Section 308 of the Act and Minnesota Statutes 115.04, allow representatives of the; Agency, local permitting authorities, local soil and water conservation districts, or municipality which operates the storm sewer system, upon presentation of credentials:

1. To enter upon the Permittee's premises where the construction activity is occurring for the purpose of obtaining information, examination of records, conducting surveys or investigations;

2. To bring such equipment upon the Permittee's premises as is necessary to conduct such surveys and investigations;

3. To examine and copy any books, papers, records, or memoranda pertaining to the storm water discharge.

4. To sample and monitor any substances or parameters at any location.

D. CIVIL AND CRIMINAL LIABILITY

Nothing in this permit shall be construed to relieve the Permittee from civil or criminal penalties for noncompliance with the terms and conditions provided herein.

E. OIL AND HAZARDOUS SUBSTANCE LIABILITY

Nothing in this permit shall be construed to preclude the installation of any legal action or relieve the Permittee from any responsibilities, liabilities, or penalties to which the Permittee is or may be subject to under Section 311 of the Act and Minn. Stat. chs. 115 and 116, as amended.

F. LIABILITY EXEMPTION

This permit authorizes the Permittee to perform the activities described herein within the conditions set forth. In issuing this permit, the State/Agency assumes no responsibility for any damage to persons, property or the environment caused by the activities authorized or undertaken pursuant to this permit. To the extent the state/agency may have any liability for the activities of its employees, that liability is explicitly limited to that provided in the Torts Claim Act, Minn. Stat. § 3.736.

G. MINNESOTA LAWS

Nothing in this permit shall be construed to preclude the installation of any legal or administrative proceedings or relieve the Permittee from any responsibilities, liabilities, or penalties for violation of effluent and water quality limitations not included in this permit or applicable laws or regulations.

H. PROPERTY RIGHTS

The issuance of this permit does not convey any property rights in either real or personal property, or any exclusive privileges, nor does it authorize any injury to private property or any invasion of personal rights, nor any infringement of federal, state, or local laws or regulations.

I. SEVERABILITY

The provisions of this permit are severable, and if any provisions of this permit, or the application of any provision of this permit to any circumstances, is held invalid, the application of such provision to other circumstances, and the remainder of this permit shall not be affected thereby.

J. NPDES/SDS RULE

The Permittee shall comply with the provisions of Minn. Rules pts. 7001.0150, subp. 3 and 7001.1090, subp. 1.A,B,C,H,I. This permit does not require the submittal of a data monitoring report.

K. OTHER STATUTES, RULES AND ORDINANCES

The Agency's issuance of a permit does not release the Permittee from any liability, penalty or duty imposed by Minnesota or federal statutes or local ordinances, except the obligation to obtain the permit.

L. MORE STRINGENT RULES

The Agency's issuance of a permit does not prevent the future adoption by the Agency of pollution control rules, standards, or orders more stringent than those now in existence and does not prevent the enforcement of these rules, standards or orders against the Permittee.

M. AGENCY OBLIGATION

The Agency's issuance of a permit does not obligate the Agency to enforce local laws, rules or plans beyond that authorized by Minnesota Statutes.

This page was intentionally left blank for duplex printing.

Inspectors Log for MPCA Storm Water Permit

Inspectors should enter their initials, type, date, and time of the inspection in the blanks provided. After inspecting each shaded area*, inspectors should check each box, and make any necessary comments regarding their findings in the blanks provided below and on the back of this sheet.

* Refer to the MPCA's *Compliance Guide for Erosion and Sediment Control* during inspection of these areas at the construction site.

Initials of Inspector	Type of Inspection		Date of Inspection			Insignificant rainfall, no inspection needed.	Time of Inspection			Areas to be Inspected*				Comments:
	Routine weekly	24 hours after a rain event	Month	Day	Year			AM	PM	All erosion and sediment control BMPP	Temporary Sedimentation basins	Drainage ditches and other waters of the state	Construction site exits	

Initials of Inspector	Type of Inspection		Date of Inspection			Time of Inspection			Additional comments:
	Routine weekly	24 hours after a rain event	Month	Day	Year		AM	PM	

SECTION TABLE OF CONTENTS

DIVISION 01 - GENERAL REQUIREMENTS

SECTION 01400

SPECIAL SAFETY REQUIREMENTS FOR DEMOLITION AND RENOVATION

05/00 Rev 02/03

PART 1 GENERAL

1.1 REFERENCES
1.2 SUMMARY
1.2.1 General
1.3 PRECONSTRUCTION CONFERENCE
1.4 SUBMITTALS
1.5 ACCIDENT PREVENTION PLAN
1.5.1 Requirements
1.5.1.1 Responsible Individual(s)
1.5.1.2 Subcontractor Supervision
1.5.1.3 Indoctrination of New Employees
1.5.1.4 Tool Box Safety Meetings
1.5.1.5 Fire Prevention and Protection
1.5.1.6 Housekeeping
1.5.1.7 Mechanical Equipment Inspection
1.5.1.8 First Aid and Medical Facilities
1.5.1.9 Sanitation
1.5.1.10 Safety Promotions
1.5.1.11 Accident Reporting
1.5.1.12 Job Hazard Analysis
1.6 RADIOLOGICAL EQUIPMENT
1.7 EXCAVATION AND TRENCHING
1.8 ASBESTOS AND LEAD PAINT
1.8.1 Safety Plans
1.8.2 Safety and Health Oversight
1.8.3 Qualifications
1.8.3.1 Competent Person
1.8.3.2 Testing Laboratory
1.8.4 Exposure Assessment
1.8.4.1 Asbestos
1.8.4.2 Lead Paint
1.8.5 Employee Protection
1.8.5.1 Respiratory Protection Program
1.8.5.2 Protective Equipment
1.8.5.3 Decontamination Areas
1.8.5.4 Handwashing Facilities
1.8.5.5 Medical Surveillance
1.8.5.6 Training
1.8.6 Engineering Controls

PART 2 PRODUCTS (NOT APPLICABLE)

PART 3 EXECUTION (NOT APPLICABLE)

-- End of Section Table of Contents --

SECTION 01400

SPECIAL SAFETY REQUIREMENTS FOR DEMOLITION AND RENOVATION
05/00 Rev 02/03

PART 1 GENERAL

1.1 REFERENCES

The publications listed below form a part of this specification to the extent referenced. The publications are referred to in the text by basic designation only.

CODE OF FEDERAL REGULATIONS (CFR)

29 CFR 1910	Occupational Safety and Health Standards
29 CFR 1926	Safety and Health Regulations for Construction
40 CFR 763	Asbestos

ENGINEERING MANUALS (EM)

EM 385-1-1	(1996 and Changes) Safety and Health Requirements Manual

1.2 SUMMARY

1.2.1 General

This section provides guidelines for preparation of accident prevention plans, and to implement the accident prevention clause (this specification) and EM 385-1-1, Safety and Health Requirements Manual. This section also includes guidelines for demolition and renovation of structures that contain nonfriable (i.e. NESHAP Category I) asbestos or lead-based paint, and that are to be demolished or renovated with these materials in place. The U.S. Army Corps of Engineers Safety and Health Requirements Manual, EM 385-1-1 is available from U.S. Government bookstores operated by the Government Printing Office and a copy is included on the CD-ROM issued with this solicitation. Changes to EM 385-1-1 applicable to this contract include only those revisions posted at the following website (all revisions up to the time this solicitation is issued): http://www.hq.usace.army.mil/soh/hqusace_soh.htm ("Changes to EM"). U.S. Government bookstores are located in most major cities including Milwaukee, Chicago, Kansas City, Denver, and Pueblo, Colorado.

1.3 PRECONSTRUCTION CONFERENCE

See Contract Clause "PRECONSTRUCTION CONFERENCE". A preconstruction conference will be scheduled prior to beginning of site work. Requirements relative to planning and administration of the overall safety program will be discussed.

1.4 SUBMITTALS

Government approval is required for submittals with a "G" designation; submittals not having a "G" designation are for information only. When used, a designation following the "G" designation identifies the office that will review the submittal for the Government. The following shall be submitted in accordance with Section 01330SUBMITTAL PROCEDURES:

Administrative Submittals

Accident Prevention Plan;

The written site-specific Accident Prevention Plan including sections for lead and asbestos.

Respiratory Protection Program; G-AO.

Records of the respirator program.

SD-06 Test Reports

Exposure Assessment and Air Monitoring; G-AO.

Initial exposure assessments, negative exposure assessments, air-monitoring results and documentation.

SD-07 Certificates

Qualifications; G-AO.

A written report providing evidence of qualifications for personnel, facilities and equipment assigned to the work.

a. Current AHERA Accreditation certificates, per AHERA Regulation 40 CFR 763, Appendix C to Subpart E, for each worker or supervisor; Current State and Local supervisor and worker accreditation certificates.

b. Laboratory Qualifications and Certificates

Training Program;

A copy of the written project site-specific training material as indicated in 29 CFR 1926, Section .1101 that will be used to train onsite employees. The training document shall be signed by the Contractor's Competent Person.

Medical Requirements.

Physician's written opinion.

1.5 ACCIDENT PREVENTION PLAN

The Contractor shall submit, prior to the start of on site construction activity, a proposed accident prevention plan which shall be the accident prevention policy to be followed by all of the Contractor's and subcontractor's personnel and supervisory staff during performance of the work.

1.5.1 Requirements

The proposed plan shall be developed after a careful analysis of the work involved and shall be tailored specifically to the conditions of this project and shall include, as separate sections, a lead safety plan and an asbestos safety plan as described in Paragraph: Safety Plans. The Contractor's accident prevention plan shall also contain, as a minimum, the following general information or procedures for the activity indicated. The Contractor shall submit his plan for review and acceptance prior to commencing work.

1.5.1.1 Responsible Individual(s)

The Contractor shall designate an onsite employee as the individual responsible for insuring the accident prevention plan is implemented and enforced.

1.5.1.2 Subcontractor Supervision

Explain procedures to assure that subcontractor(s) fully comply with the accident prevention plan.

1.5.1.3 Indoctrination of New Employees

The plan shall include provisions for advising workers of the purpose of the accident prevention plan, specific hazards on the job and precautions to be taken, emergency procedures, information concerning tool box safety meetings, required protective equipment, cleanup rules and location of company safety rules (posting or handout).

1.5.1.4 Tool Box Safety Meetings

Hold weekly "Tool Box" safety meetings. Timely safety subjects shall be determined by a responsible individual. Employees will be informed of time, location, who will conduct, and subject. Identify procedures for including subcontractors. The Contractor shall provide a copy of the Weekly Tool Box Meeting and Monthly Supervisor's Safety Meeting to the Contracting Officer.

1.5.1.5 Fire Prevention and Protection

Identify source of fire protection. Insure adequate fire extinguishers, water barrels, or other fire-fighting equipment is located on site. Explain prevention activities to include storage areas and special hazards such as welding and use of flammable liquids, and other special hazards.

1.5.1.6 Housekeeping

Daily cleanup of all debris and waste materials is required. Adequate disposal containers should be placed strategically around the site. Debris shall be removed on a regular basis. Explain procedures that include use of barrels, dumpsters, trash chutes, etc.

1.5.1.7 Mechanical Equipment Inspection

All mechanical equipment (trucks, cranes, forklifts, backhoes, graders, etc.) shall be inspected prior to use and at fixed intervals throughout the life of the contract. Explain how inspections will be accomplished (frequency, by whom, and records to be kept).

1.5.1.8 First Aid and Medical Facilities

First aid facilities shall be made available on the job site. Arrangements for emergency medical attention shall be made prior to start of work. All emergency numbers (doctor, hospital, ambulance, fire department) shall be posted at the project superintendent's office.

1.5.1.9 Sanitation

Include provisions for toilet facilities, drinking water and washing facilities. A sufficient number of toilet facilities as specified in EM 385-1-1 shall be provided unless permission is granted to use existing facilities (portable chemical are authorized). Insure safe drinking water and individual cups are available. For the projects where corrosive or toxic materials are used, separate washing facilities are required.

1.5.1.10 Safety Promotions

The Contractor shall promote accident prevention. Identify method (posters, awards etc.).

1.5.1.11 Accident Reporting

All accidents (employee injuries, vehicle, building, or equipment damage etc.) regardless of their severity, shall be reported to the onsite government representative or to the area engineer, who in turn will advise the Contractor of forms to be submitted and timeframes.

1.5.1.12 Job Hazard Analysis

When job situations change and it is necessary to alter safety requirements, a Job Hazard Analysis will be accomplished, documented, and added as an addendum to the Accident Prevention Plan. Each Job Hazard Analysis shall include, but not be limited to, a description of the work, probable hazards related to that work and positive precautionary measures to be taken to reduce or eliminate each hazard. An example of changing situations may be new subcontractors performing work such as earth moving, trenching, concrete work, roofing, electrical, masonry etc. The onsite government representative will determine the format and amount of detail required of the written plan.

1.6 RADIOLOGICAL EQUIPMENT

In addition to any applicable Nuclear Regulatory Commission, state, local, or other federal licenses or permits, and in accordance with requirements of EM 385-1-1, Safety and Health Requirement Manual, the Contractor is required to obtain a service permit to use, store, operate, or handle a radiation producing machine or radioactive materials on a Department of Defense (DOD) Installation. The service permit shall be obtained from the appropriate U.S. Army or U.S. Air Force Command through the Contracting Officer's representative. The Contractor should notify the Contracting Officer during the prework conference if a radiation producing device will be utilized on a DOD Installation in order to determine the permit application requirements, and allow a lead time of 45 days for obtaining a permit.

1.7 EXCAVATION AND TRENCHING

The standards for excavation and trenching are outlined in 29 CFR 1926,

Subpart P. These standards shall be followed in addition to those outlined in EM 385-1-1.

1.8 ASBESTOS AND LEAD PAINT

1.8.1 Safety Plans

The accident prevention plan shall contain distinct sections entitled Lead Safety Plan and Asbestos Safety Plan. Each section will address the following topics: qualifications of the competent person, laboratory qualifications, personal air monitoring, exposure assessment, work practices for specific Class II asbestos activities, engineering controls to reduce exposure, personal protection equipment, respiratory protection program, hygiene facilities and practices, medical surveillance, employee training, housekeeping, and waste containerization, labeling and disposal,

1.8.2 Safety and Health Oversight

Work which may expose personnel to asbestos and lead paint shall be supervised by a Competent Person as defined in 29 CFR 1926.1101 and 29 CFR 1926.62 and as required in paragraph: Qualifications of this section. The Competent Person shall be able to identify existing and predictable asbestos and lead paint hazards and shall have the authority to take corrective measures to eliminate them. Personal air monitoring shall be overseen by the Competent Person.

1.8.3 Qualifications

1.8.3.1 Competent Person

a. Asbestos

The Contractor's full-time onsite Competent Person shall meet the competent person requirements of 29 CFR 1926 Section .1101 and shall have completed the EPA Model Accreditation Plan (MAP) "Contractor/Supervisor" training accreditation required by 40 CFR 763, Subpart E, Appendix C. The Competent Person shall be experienced in the administration and supervision of asbestos abatement projects, including exposure assessment and monitoring, work practices, protective measures for personnel, setting up and inspecting asbestos abatement work areas, ACM generated waste containment and disposal procedures, decontamination units installation and maintenance requirements, site safety and health requirements, etc. and have had a minimum of 2 years on-the-job experience.

b. Lead Paint

The Contractor's full-time onsite Competent Person shall meet the competent person requirements of 29 CFR 1926 Section .62 and be experienced in administration and supervision of projects involving lead-based paint, including work practices, protective measures for personnel, etc. This person shall have completed a Contractor Supervisor LBP abatement course by an EPA Training Center or an equivalent certification course, and have had a minimum of 2 years on-the-job experience.

1.8.3.2 Testing Laboratory

a. Asbestos

The Contractor shall provide the name, address and telephone number of the independent testing laboratory selected to perform the sample analyses and report the results. The testing laboratory shall be completely independent from the Contractor as recognized by federal, state or local regulations. Written verification, signed by the testing laboratory principal and the Contractor, that the laboratory is fully equipped and proficient in conducting PCM of airborne samples using the methods specified by 29 CFR 1926, Section .1101, OSHA method ID-160, and the most current version of NIOSH Pub No. 84-100 Method 7400. Evidence that the laboratory is currently judged proficient (classified as acceptable) in counting airborne asbestos samples by PCM by successful participation in each of the last 4 rounds in the American Industrial Hygiene Association (AIHA) shall be submitted.

b. Lead Paint

The laboratory performing the analysis shall be an EPA National Lead Laboratory Accreditation Program (NLLAP) accredited laboratory and be rated proficient in the NIOSH/EPA Environmental Lead Proficiency Analytical Testing Program (ELPAT). Currently, the American Association for Laboratory Accreditation (ASLA) and the American Industrial Hygiene Association (AIHA) are the EPA recognized laboratory accreditors.

1.8.4 Exposure Assessment

1.8.4.1 Asbestos

a. Initial Exposure Assessment

The Contractor's Competent Person shall conduct an exposure assessment immediately before or at the initiation of an asbestos abatement operation to ascertain expected exposures during that operation. The assessment shall be completed in time to comply with the requirements which are triggered by exposure data or the lack of a negative exposure assessment, and to provide information necessary to assure that all control systems planned are appropriate for that operation. The assessment shall take into consideration both the monitoring results and all observations, information or calculations which indicate employee exposure to asbestos, including any previous monitoring conducted in the workplace, or of the operations of the Contractor which indicate the levels of airborne asbestos likely to be encountered on the job.

b. Negative Exposure Assessment

The Contractor may provide a negative exposure assessment for the specific asbestos job covered by this Specification Section. When provided, the Negative Exposure Assessment shall be based on one or more of the following criteria:

(1) Objective Data: Objective data demonstrating that the product or material containing asbestos minerals or the activity involving such product or material cannot release airborne fibers in concentrations exceeding the PEL-TWA and PEL-Excursion Limit under those work conditions having the greatest potential for releasing asbestos.

(2) Prior Asbestos Jobs: Where the Contractor has monitored prior asbestos jobs for the PEL and the PEL-Excursion Limit within 12 months of the current job, the monitoring and analysis were performed in compliance with asbestos standard in effect; the data were obtained

during work operations conducted under workplace conditions closely resembling the processes, type of material, control methods, work practices, and environmental conditions used and prevailing in the Contractor's current operations; the operations were conducted by employees whose training and experience are no more extensive than that of employees performing the current job; and these data show that under the conditions prevailing and which will prevail in the current workplace, there is a high degree of certainty that the monitoring covered exposure from employee exposures will not exceed the PEL-TWA and PEL-Excursion Limit.

(3) Initial Exposure Monitoring: The results of initial exposure monitoring of the current job, made from breathing zone air samples that are representative of the 8-hour PEL-TWA and 30-minute short-term exposures of each employee. The monitoring covered exposure from operations which are most likely during the performance of the entire asbestos job to result in exposures over the PELs.

1.8.4.2 Lead Paint

For personnel who may be exposed to dust resulting from demolition or removal of painted surfaces, the Contractor is required to perform an exposure assessment to determine personnel exposure levels to lead. This assessment shall consist of personal air monitoring representative of a full shift. Airborne concentrations of lead shall be collected and analyzed in accordance with 29 CFR 1926 Section .62. Results shall be reported in micrograms per cubic meter of air. The Competent Person shall use personal air monitoring results to determine the effectiveness of engineering controls, the adequacy of PPE and to determine if proper work practices are being employed. The Contracting Officer shall be notified if any personal air monitoring result equals or exceeds 30 micrograms per cubic meter of air. The Contractor shall take steps to reduce the concentration of lead in the air. If results are obtained indicating employee exposure below the action level for lead (30 ug/m3) the Competent Person may recommend to the Contracting Officer, in writing, appropriate reductions in employee protection. Alternatively, as determined by the Competent Person, where the Contractor has previously monitored for lead exposures within the past 12 months during work operations conducted under workplace conditions closely resembling the processes, type of materials, control methods, work practices, and environmental conditions used and prevailing in the Contractor's current operations, the Contractor may, upon approval of the Contracting Officer, use this data in making the initial determination of employee exposure.

1.8.5 Employee Protection

Until monitoring results are received which document that the employee is not exposed above the action level for asbestos or lead, the Contractor shall implement employee protective measures as listed below:

1.8.5.1 Respiratory Protection Program

A respiratory protection program shall be established as required by 29 CFR 1926 Section .103, .1101 and .62 and in accordance with 29 CFR 1910 Section .134. A NIOSH-approved respirator and cartridges appropriate to the job, as determined by the Competent Person, shall be furnished to each employee and visitor potentially exposed to airborne asbestos or lead. A fit test shall be conducted in accordance with applicable sections of 29 CFR 1926.

1.8.5.2 Protective Equipment

The Contractor shall furnish, at no cost to personnel, equipment/clothing for protection from airborne and waterborne asbestos and LBP debris. An adequate supply of disposable full-body coveralls, steel toe/shank boots with nonskid soles or impermeable work boot covers, gloves, hard hats and eye protection shall be worn by workers in regulated work areas. Employees shall be instructed in appropriate practices for donning and removing protective equipment. Protective clothing and equipment shall not be removed from the work site at any time.

1.8.5.3 Decontamination Areas

The employer shall establish a decontamination area that is adjacent to the regulated area for the decontamination of employees and their equipment which is contaminated with asbestos. The decontamination area shall be a designated area shall be covered by an impermeable drop cloth and shall be of sufficient size to accommodate cleaning of equipment and for removing personal protective equipment without spreading contamination beyond the area. The decontamination area shall be established in a manner such that employees must enter and exit the decontamination area through the equipment drop area. Work clothing, must be HEPA vacuumed before it is removed. Equipment and other surfaces shall be cleaned prior to removing the items from the decontamination area. To prevent cross-contamination, the employer shall provide storage facilities for protective work clothing and equipment that are segregated from storage areas for street clothes and non-contaminated equipment. The employer shall also assure that employees do not leave the workplace wearing any protective clothing or equipment that is required to be worn during the work shift.

1.8.5.4 Handwashing Facilities

The employer shall provide adequate handwashing facilities for use by employees in accordance with 29 CFR 1926.51(f) and shall assure that employees wash their hands and face at the end of the work-shift.

1.8.5.5 Medical Surveillance

a. Asbestos

Before being exposed to airborne asbestos fibers, workers shall be provided with a medical examination as required by 29 CFR 1926, Section .1101(m) and other pertinent state or local requirements. This requirement shall have been satisfied within the last 12 months. The same medical examination shall be given on an annual basis to employees engaged in an occupation involving asbestos and within 30 calendar days before or after the termination of employment in such occupation. X-ray films of asbestos workers shall be identified to the consulting radiologist and medical record jackets shall be marked with the word "asbestos."

b. Lead Paint

Medical surveillance for lead shall comply with the requirements of 29 CFR 1926 Section 62(j) and other pertinent state or local requirements. Analysis for blood lead and zinc protoporphyrin levels shall be included in the examination portion of the medical surveillance program.

1.8.5.6 Training

a. Asbestos

Workers conducting Class II asbestos work shall be provided training prior to the time of job assignment and, at least, annually. Training shall include, at a minimum the elements specified in 29 CFR 1926 Section .1101(k)(9)"Emplo Information and Training".

b. Lead Paint

Workers potentially exposed to lead-contaminated dust shall be provided training regarding lead hazards prior to the time of job assignment and, at least, annually. Training shall include, at a minimum the elements specified in 29 CFR 1926 Section .62(l) "Employee Information and Training".

1.8.6 Engineering Controls

Engineering controls shall be employed to maintain the integrity of the asbestos material and lead paint and to minimize the potential for release of asbestos fibers or generation of lead-containing dust. Asbestos-containing materials shall not be cut, ground, abraded or handled in any other manner that may render the material friable as described in 40 CFR 61, Subpart M and OSHA 29 CFR 1926.1101. The contractor shall describe proposed engineering control methods and practices in the lead safety and asbestos safety portions of the accident prevention plan.

PART 2 PRODUCTS (NOT APPLICABLE)

PART 3 EXECUTION (NOT APPLICABLE)

-- End of Section --

This page was intentionally left blank for duplex printing.

SECTION TABLE OF CONTENTS

DIVISION 01 - GENERAL REQUIREMENTS

SECTION 01451A

CONTRACTOR QUALITY CONTROL

1/03; Omaha Revision 8/03

PART 1 GENERAL

1.1 REFERENCES
1.2 PAYMENT

PART 2 PRODUCTS (Not Applicable)

PART 3 EXECUTION

3.1 GENERAL REQUIREMENTS
3.2 QUALITY CONTROL PLAN
3.2.1 Content of the CQC Plan
3.2.2 Acceptance of Plan
3.2.3 Notification of Changes
3.3 COORDINATION MEETING
3.4 QUALITY CONTROL ORGANIZATION
3.4.1 Personnel Requirements
3.4.2 CQC System Manager
3.4.3 CQC Personnel
3.4.4 Additional Requirement
3.4.5 Organizational Changes
3.5 SUBMITTALS AND DELIVERABLES
3.6 CONTROL
3.6.1 Preparatory Phase
3.6.2 Initial Phase
3.6.3 Follow-up Phase
3.6.4 Additional Preparatory and Initial Phases
3.7 TESTS
3.7.1 Testing Procedure
3.7.2 Testing Laboratories
3.7.2.1 Capability Check
3.7.2.2 Capability Recheck
3.7.3 Onsite Laboratory
3.7.4 Furnishing or Transportation of Samples for Testing
3.8 COMPLETION INSPECTION
3.8.1 Punch-Out Inspection
3.8.2 Pre-Final Inspection
3.8.3 Final Acceptance Inspection
3.9 DOCUMENTATION
3.10 SAMPLE FORMS
3.11 NOTIFICATION OF NONCOMPLIANCE

-- End of Section Table of Contents --

SECTION 01451A

CONTRACTOR QUALITY CONTROL
1/03; Omaha Revision 8/03

PART 1 GENERAL

1.1 REFERENCES

The publications listed below form a part of this specification to the extent referenced. The publications are referred to in the text by basic designation only.

AMERICAN SOCIETY FOR TESTING AND MATERIALS (ASTM)

ASTM D 3740	(2001) Minimum Requirements for Agencies Engaged in the Testing and/or Inspection of Soil and Rock as Used in Engineering Design and Construction
ASTM E 329	(2000b) Agencies Engaged in the Testing and/or Inspection of Materials Used in Construction

1.2 PAYMENT

Separate payment will not be made for providing and maintaining an effective Quality Control program, and all costs associated therewith shall be included in the applicable unit prices or lump-sum prices contained in the Bidding Schedule.

PART 2 PRODUCTS (Not Applicable)

PART 3 EXECUTION

3.1 GENERAL REQUIREMENTS

The Contractor is responsible for quality control and shall establish and maintain an effective quality control system in compliance with the Contract Clause titled "Inspection of Construction." The quality control system shall consist of plans, procedures, and organization necessary to produce an end product which complies with the contract requirements. The system shall cover all design-construction and construction operations, both onsite and offsite, and shall be keyed to the proposed construction sequence.

The site project superintendent will be held responsible for the quality of work on the job. The site project superintendent is subject to removal by the Contracting Officer for non-compliance with either the established quality control system or quality requirements specified in this contract. The site project superintendent in this context shall be the highest-level manager responsible for the overall construction activities at the site, including quality and production. The site project superintendent shall maintain a physical presence at the site at all times, except as otherwise acceptable to the Contracting Officer.

3.2 QUALITY CONTROL PLAN

The Contractor shall furnish for review by the Government, not later than 10 days after receipt of notice to proceed, the Contractor Quality Control (CQC) Plan proposed to implement the requirements of the Contract Clause titled "Inspection of Construction." The plan shall identify personnel, procedures, control, instructions, tests, records, and forms to be used. The Government will consider an interim plan for the first 30 days of operation. Construction will be permitted to begin only after acceptance of the CQC Plan or acceptance of an interim plan applicable to the particular feature of work to be started. Work outside of the features of work included in an accepted interim plan will not be permitted to begin until acceptance of a CQC Plan or another interim plan containing the additional features of work to be started.

3.2.1 Content of the CQC Plan

The CQC Plan shall include, as a minimum, the following to cover all construction operations, both onsite and offsite, including work by subcontractors, fabricators, suppliers, and purchasing agents:

a. A description of the quality control organization, including a chart showing lines of authority and acknowledgment that the CQC staff shall implement the three phase control system for all aspects of the work specified. The staff shall include a CQC System Manager who shall report to the Project Manager or someone higher in the Contractor's organization. Project Manager in this context shall mean the individual with responsibility for the overall management of the project, including quality and production.

b. The name, qualifications (in resume format), duties, responsibilities, and authorities of each person assigned a CQC function.

c. A copy of the letter to the CQC System Manager signed by an authorized official of the firm which describes the responsibilities and delegates sufficient authorities to adequately perform the functions of the CQC System Manager, including authority to stop work which is not in compliance with the contract. The CQC System Manager shall issue letters of direction to all other various quality control representatives outlining duties, authorities, and responsibilities. Copies of these letters shall also be furnished to the Government.

d. Procedures for scheduling, reviewing, certifying, and managing submittals, including those of subcontractors, offsite fabricators, suppliers, and purchasing agents. These procedures shall be in accordance with Section 01330 SUBMITTAL PROCEDURES.

e. Control, verification, and acceptance testing procedures for each specific test to include the test name, specification paragraph requiring test, feature of work to be tested, test frequency, and person responsible for each test. (Laboratory facilities approved by the Contracting Officer shall be used.)

f. Procedures for tracking preparatory, initial, and follow-up control phases and control, verification, and acceptance tests including documentation.

g. Procedures for tracking construction deficiencies from identification through acceptable corrective action. These procedures shall establish verification that identified deficiencies have been corrected.

h. Reporting procedures, including proposed reporting formats.

i. A list of the definable features of work. A definable feature of work is a task which is separate and distinct from other tasks, has separate control requirements, and may be identified by different trades or disciplines, or it may be work by the same trade in a different environment. Although each section of the specifications may generally be considered as a definable feature of work, there are frequently more than one definable features under a particular section. This list will be agreed upon during the coordination meeting.

3.2.2 Acceptance of Plan

Acceptance of the Contractor's plan is required prior to the start of construction. Acceptance is conditional and will be predicated on satisfactory performance during the construction. The Government reserves the right to require the Contractor to make changes in his CQC Plan and operations including removal of personnel, as necessary, to obtain the quality specified.

3.2.3 Notification of Changes

After acceptance of the CQC Plan, the Contractor shall notify the Contracting Officer in writing of any proposed change. Proposed changes are subject to acceptance by the Contracting Officer.

3.3 COORDINATION MEETING

After the Preconstruction Conference, before start of construction, and prior to acceptance by the Government of the CQC Plan, the Contractor shall meet with the Contracting Officer or Authorized Representative and discuss the Contractor's quality control system. The CQC Plan shall be submitted for review a minimum of 10 calendar days prior to the Coordination Meeting. During the meeting, a mutual understanding of the system details shall be developed, including the forms for recording the CQC operations, control activities, testing, administration of the system for both onsite and offsite work, and the interrelationship of Contractor's Management and control with the Government's Quality Assurance. Minutes of the meeting shall be prepared by the Government and signed by both the Contractor and the Contracting Officer. The minutes shall become a part of the contract file. There may be occasions when subsequent conferences will be called by either party to reconfirm mutual understandings and/or address deficiencies in the CQC system or procedures which may require corrective action by the Contractor.

3.4 QUALITY CONTROL ORGANIZATION

3.4.1 Personnel Requirements

The requirements for the CQC organization are a CQC System Manager and sufficient number of additional qualified personnel to ensure safety and contract compliance. Personnel identified in the technical provisions as

requiring specialized skills to assure the required work is being performed properly will also be included as part of the CQC organization. The Contractor's CQC staff shall maintain a presence at the site at all times during progress of the work and have complete authority and responsibility to take any action necessary to ensure contract compliance. The CQC staff shall be subject to acceptance by the Contracting Officer. The Contractor shall provide adequate office space, filing systems and other resources as necessary to maintain an effective and fully functional CQC organization. Complete records of all letters, material submittals, shop drawing submittals, schedules and all other project documentation shall be promptly furnished to the CQC organization by the Contractor. The CQC organization shall be responsible to maintain these documents and records at the site at all times, except as otherwise acceptable to the Contracting Officer.

3.4.2 CQC System Manager

The Contractor shall identify as CQC System Manager an individual within the onsite work organization who shall be responsible for overall management of CQC and have the authority to act in all CQC matters for the Contractor. The CQC System Manager shall be a construction person with a minimum of 5 years in related work. This CQC System Manager shall be on the site at all times during construction and shall be employed by the prime Contractor. The CQC System Manager shall be assigned as System Manager but may have duties as project superintendent in addition to quality control. An alternate for the CQC System Manager shall be identified in the plan to serve in the event of the System Manager's absence. The requirements for the alternate shall be the same as for the designated CQC System Manager.

3.4.3 CQC Personnel

A staff shall be maintained under the direction of the CQC system manager to perform all QC activities. The staff must be of sufficient size to ensure adequate QC coverage of all work phases, work shifts, and work crews involved in the construction. These personnel may perform other duties, but must be fully qualified by experience and technical training to perform their assigned QC responsibilities and must be allowed sufficient time to carry out these responsibilities. The QC plan will clearly state the duties and responsibilities of each staff member. Other technical specifications may specify individuals for maintaining quality control for specific areas of work. These individuals shall be under the direction of the CQC System Manager.

3.4.4 Additional Requirement

In addition to the above experience and education requirements the CQC System Manager shall have completed the course entitled "Construction Quality Management For Contractors". This course is periodically offered at each of the four area offices in the Omaha District according to the following revolving training schedule:.

Badger Area	First Session	Between 15 & 25 April
	Second Session	Between 15 & 25 October
Point of Contact	Roy Brewer	(319) 753-1386
Black Hills Area	First Session	Between 1 & 10 March
	Second Session	Between 1 & 10 September
Point of Contact	Dwight Pochant	(605) 923-2983

Fort Crook Area	First Session	Between 15 & 25 January
	Second Session	Between 15 & 25 July
Point of Contact	Al Kreisler	(402) 293-2540
Rocky Mountain	First Session	Between 1 & 10 June
	Second Session	Between 1 & 10 December
Point of Contact	Paul Jendzejec	(719) 556-4184

The exact date and location for the sessions will be determined approximately 30 days in advance of the training. The cost of training is presently established at $50 to be paid by each student in advance of the training. For information about a particular session, the best source is the point of contact listed above.

3.4.5 Organizational Changes

The Contractor shall maintain the CQC staff at full strength at all times. When it is necessary to make changes to the CQC staff, the Contractor shall revise the CQC Plan to reflect the changes and submit the changes to the Contracting Officer for acceptance.

3.5 SUBMITTALS AND DELIVERABLES

Submittals, if needed, shall be made as specified in Section 01330 SUBMITTAL PROCEDURES. The CQC organization shall be responsible for certifying that all submittals and deliverables are in compliance with the contract requirements. When Section 15950A HEATING, VENTILATING AND AIR CONDITIONING (HVAC) CONTROL SYSTEMS; 15951A DIRECT DIGITAL CONTROL FOR HVAC; 15990A TESTING, ADJUSTING, AND BALANCING OF HVAC SYSTEMS; or 15995A COMMISSIONING OF HVAC SYSTEMS are included in the contract, the submittals required by those sections shall be coordinated with Section 01330 SUBMITTAL PROCEDURES to ensure adequate time is allowed for each type of submittal required.

3.6 CONTROL

Contractor Quality Control is the means by which the Contractor ensures that the construction, to include that of subcontractors and suppliers, complies with the requirements of the contract. At least three phases of control shall be conducted by the CQC System Manager for each definable feature of the construction work as follows:

3.6.1 Preparatory Phase

This phase shall be performed prior to beginning work on each definable feature of work, after all required plans/documents/materials are approved/accepted, and after copies are at the work site. This phase shall include:

a. A review of each paragraph of applicable specifications, reference codes, and standards. Prior to the preparatory meeting for each definable feature of work, the Contractor shall provide all technical references (i.e. building codes, life safety codes, etc.) referenced in the project specifications for feature(s) of work being addressed at the preparatory meeting. These technical references shall be onsite and available for use by Contractor and Government personnel before the preparatory meeting is held and maintained until the feature(s) of work is/are accepted by the Government.

b. A review of the contract drawings.

c. A check to assure that all materials and/or equipment have been tested, submitted, and approved.

d. Review of provisions that have been made to provide required control inspection and testing.

e. Examination of the work area to assure that all required preliminary work has been completed and is in compliance with the contract.

f. A physical examination of required materials, equipment, and sample work to assure that they are on hand, conform to approved shop drawings or submitted data, and are properly stored.

g. A review of the appropriate activity hazard analysis to assure safety requirements are met.

h. Discussion of procedures for controlling quality of the work including repetitive deficiencies. Document construction tolerances and workmanship standards for that feature of work.

i. A check to ensure that the portion of the plan for the work to be performed has been accepted by the Contracting Officer.

j. Discussion of the initial control phase.

k. The Government shall be notified at least 48 hours in advance of beginning the preparatory control phase. This phase shall include a meeting conducted by the CQC System Manager and attended by the superintendent, other CQC personnel (as applicable), and the foreman responsible for the definable feature. The results of the preparatory phase actions shall be documented by separate minutes prepared by the CQC System Manager and attached to the daily CQC report. The Contractor shall instruct applicable workers as to the acceptable level of workmanship required in order to meet contract specifications.

3.6.2 Initial Phase

This phase shall be accomplished at the beginning of a definable feature of work. The following shall be accomplished:

a. A check of work to ensure that it is in full compliance with contract requirements. Review minutes of the preparatory meeting.

b. Verify adequacy of controls to ensure full contract compliance. Verify required control inspection and testing.

c. Establish level of workmanship and verify that it meets minimum acceptable workmanship standards. Compare with required sample panels as appropriate.

d. Resolve all differences.

e. Check safety to include compliance with and upgrading of the safety plan and activity hazard analysis. Review the activity

analysis with each worker.

f. The Government shall be notified at least 48 hours in advance of beginning the initial phase. Separate minutes of this phase shall be prepared by the CQC System Manager and attached to the daily CQC report. Exact location of initial phase shall be indicated for future reference and comparison with follow-up phases.

g. The initial phase should be repeated for each new crew to work onsite, or any time acceptable specified quality standards are not being met.

3.6.3 Follow-up Phase

Daily checks shall be performed to assure control activities, including control testing, are providing continued compliance with contract requirements, until completion of the particular feature of work. The checks shall be made a matter of record in the CQC documentation. Final follow-up checks shall be conducted and all deficiencies corrected prior to the start of additional features of work which may be affected by the deficient work. The Contractor shall not build upon nor conceal non-conforming work.

3.6.4 Additional Preparatory and Initial Phases

Additional preparatory and initial phases shall be conducted on the same definable features of work if: the quality of on-going work is unacceptable; if there are changes in the applicable CQC staff, onsite production supervision or work crew; if work on a definable feature is resumed after a substantial period of inactivity; or if other problems develop.

3.7 TESTS

3.7.1 Testing Procedure

The Contractor shall perform specified or required tests to verify that control measures are adequate to provide a product which conforms to contract requirements. Upon request, the Contractor shall furnish to the Government duplicate samples of test specimens for possible testing by the Government. Testing includes operation and/or acceptance tests when specified. The Contractor shall procure the services of a Corps of Engineers approved testing laboratory or establish an approved testing laboratory at the project site. The Contractor shall perform the following activities and record and provide the following data:

a. Verify that testing procedures comply with contract requirements.

b. Verify that facilities and testing equipment are available and comply with testing standards.

c. Check test instrument calibration data against certified standards.

d. Verify that recording forms and test identification control number system, including all of the test documentation requirements, have been prepared.

e. Results of all tests taken, both passing and failing tests, shall be recorded on the CQC report for the date taken. Specification

paragraph reference, location where tests were taken, and the sequential control number identifying the test shall be given. If approved by the Contracting Officer, actual test reports may be submitted later with a reference to the test number and date taken. An information copy of tests performed by an offsite or commercial test facility shall be provided directly to the Contracting Officer. Failure to submit timely test reports as stated may result in nonpayment for related work performed and disapproval of the test facility for this contract.

3.7.2 Testing Laboratories

3.7.2.1 Capability Check

The Government reserves the right to check laboratory equipment in the proposed laboratory for compliance with the standards set forth in the contract specifications and to check the laboratory technician's testing procedures and techniques. Laboratories utilized for testing soils, concrete, asphalt, and steel shall meet criteria detailed in ASTM D 3740 and ASTM E 329.

3.7.2.2 Capability Recheck

If the selected laboratory fails the capability check, the Contractor will be assessed the actual cost for the recheck to reimburse the Government for each succeeding recheck of the laboratory or the checking of a subsequently selected laboratory. Such costs will be deducted from the contract amount due the Contractor.

3.7.3 Onsite Laboratory

The Government reserves the right to utilize the Contractor's control testing laboratory and equipment to make assurance tests, and to check the Contractor's testing procedures, techniques, and test results at no additional cost to the Government.

3.7.4 Furnishing or Transportation of Samples for Testing

Costs incidental to the transportation of samples or materials shall be borne by the Contractor. Samples of materials for test verification and acceptance testing by the Government shall be delivered to the Resident or Area (as directed) Office.

Coordination for each specific test, exact delivery location, and dates will be made through the Resident or Area (as directed) Office.

3.8 COMPLETION INSPECTION

3.8.1 Punch-Out Inspection

Near the end of the work, or any increment of the work established by a time stated in the SPECIAL CONTRACT REQUIREMENTS Clause, "Commencement, Prosecution, and Completion of Work", or by the specifications, the CQC Manager shall conduct an inspection of the work. A punch list of items which do not conform to the approved drawings and specifications shall be prepared and included in the CQC documentation, as required by paragraph DOCUMENTATION. The list of deficiencies shall include the estimated date by which the deficiencies will be corrected. The CQC System Manager or staff shall make a second inspection to ascertain that all deficiencies

have been corrected. Once this is accomplished, the Contractor shall notify the Government that the facility is ready for the Government Pre-Final inspection.

3.8.2 Pre-Final Inspection

The Government will perform the pre-final inspection to verify that the facility is complete and ready to be occupied. A Government Pre-Final Punch List may be developed as a result of this inspection. The Contractor's CQC System Manager shall ensure that all items on this list have been corrected before notifying the Government, so that a Final inspection with the customer can be scheduled. Any items noted on the Pre-Final inspection shall be corrected in a timely manner. These inspections and any deficiency corrections required by this paragraph shall be accomplished within the time slated for completion of the entire work or any particular increment of the work if the project is divided into increments by separate completion dates.

3.8.3 Final Acceptance Inspection

The Contractor's Quality Control Inspection personnel, plus the superintendent or other primary management person, and the Contracting Officer's Representative shall be in attendance at the final acceptance inspection. Additional Government personnel including, but not limited to, those from Base/Post Civil Facility Engineer user groups, and major commands may also be in attendance. The final acceptance inspection will be formally scheduled by the Contracting Officer based upon results of the Pre-Final inspection. Notice shall be given to the Contracting Officer at least 14 days prior to the final acceptance inspection and shall include the Contractor's assurance that all specific items previously identified to the Contractor as being unacceptable, along with all remaining work performed under the contract, will be complete and acceptable by the date scheduled for the final acceptance inspection. Failure of the Contractor to have all contract work acceptably complete for this inspection will be cause for the Contracting Officer to bill the Contractor for the Government's additional inspection cost in accordance with the contract clause titled "Inspection of Construction".

3.9 DOCUMENTATION

The Contractor shall maintain current records providing factual evidence that required quality control activities and/or tests have been performed. These records shall include the work of subcontractors and suppliers and shall be on an acceptable form that includes, as a minimum, the following information:

a. Contractor/subcontractor and their area of responsibility.

b. Operating plant/equipment with hours worked, idle, or down for repair.

c. Work performed each day, giving location, description, and by whom. When Network Analysis (NAS) is used, identify each phase of work performed each day by NAS activity number.

d. Test and/or control activities performed with results and references to specifications/drawings requirements. The control phase shall be identified (Preparatory, Initial, Follow-up). List of deficiencies noted, along with corrective action.

e. Quantity of materials received at the site with statement as to acceptability, storage, and reference to specifications/drawings requirements.

f. Submittals and deliverables reviewed, with contract reference, by whom, and action taken.

g. Offsite surveillance activities, including actions taken.

h. Job safety evaluations stating what was checked, results, and instructions or corrective actions. Include information identified by the "Responsible Individual(s)" for Safety as outlined in SECTION 01400, SPECIAL SAFETY REQUIREMENTS.

i. Instructions given/received and conflicts in plans and/or specifications.

j. Contractor's verification statement.

These records shall indicate a description of trades working on the project; the number of personnel working; weather conditions encountered; and any delays encountered. These records shall cover both conforming and deficient features and shall include a statement that equipment and materials incorporated in the work and workmanship comply with the contract. The original and one copy of these records in report form shall be furnished to the Contracting Officer's Representative on the first day following the date(s) covered by the report, except that reports need not be submitted for days on which no work is performed. As a minimum, one report shall be prepared and submitted for every 7 days of no work and on the last day of a no work period. All calendar days shall be accounted for throughout the life of the contract. The first report following a day of no work shall be for that day only. Reports shall be signed and dated by the CQC System Manager. The report from the CQC System Manager shall include copies of test reports and copies of reports prepared by all subordinate quality control personnel.

3.10 SAMPLE FORMS

Sample forms enclosed at the end of this section.

3.11 NOTIFICATION OF NONCOMPLIANCE

The Contracting Officer will notify the Contractor of any detected noncompliance with the foregoing requirements. The Contractor shall take immediate corrective action after receipt of such notice. Such notice, when delivered to the Contractor at the work site, shall be deemed sufficient for the purpose of notification. If the Contractor fails or refuses to comply promptly, the Contracting Officer may issue an order stopping all or part of the work until satisfactory corrective action has been taken. No part of the time lost due to such stop orders shall be made the subject of claim for extension of time or for excess costs or damages by the Contractor.

_____
(FIRM NAME)

DAILY QUALITY CONTROL REPORT

Daily Report No.: _____ DATE: _____
Contract No. _____
Project Title & Location:
_____
Weather: ____ Precipitation: _____ in. _____ Temp:____ Min. ____ Max. ____

1. Contract/Subcontractors and Area of Responsibility:

NUMBER:	TRADE	HOURS	EMPLOYER	LOCATION/DESCRIPTION WORK

2. Operating Plant or Equipment. (Not hand tools)

Plant/Equipment	Date of Arrival/Departure	Date of Safety Check	Hours Used	Hours Idle	Hours Repair

3. Work Performed Today: (Indicate location and description of work performed by prime and/or subcontractors. When network analysis is used, identify work by NAS activity number).

4. Control Activities Performed:
   Preparatory Inspections: (Identify feature of work and attach minutes).
   Initial Inspections: (Identify feature of work and attach minutes).
   Follow-Up Inspections: (List inspections performed, results of inspection compared to specification requirements, and corrective actions taken when deficiencies are noted).

5. Tests Performed and Test Results: (Identify test requirement by paragraph number in specifications and/or sheet number in plans).

6. Material Received: (Note inspection results and storage provided).

7. Submittals Reviewed:

(a) Submittal No.	(b) Spec/Plan Reference	(c) By Whom	(d) Action

8. Offsite Surveillance Activities, Including Action Taken:

_____
_____
_____
_____
_____
_____
_____
_____

9. Job Safety: (List items checked, results, instructions and corrective actions taken).

_____
_____
_____
_____
_____
_____
_____
_____
_____

10. Remarks: (Instructions received or given. Conflict(s) in Plans and/or specifications. Delays encountered.).

_____
_____
_____
_____
_____
_____
_____

Contractor's Verification: On behalf of the Contractor, I certify this report is complete and correct, and all materials and equipment used and work performed during this reporting period are in compliance with the contract plans and specifications, to the best of my knowledge, except as may be noted above.

_____

CQC System Manager Date

-- End of Section --

SECTION TABLE OF CONTENTS

DIVISION 01 - GENERAL REQUIREMENTS

SECTION 01500

TEMPORARY CONSTRUCTION FACILITIES

02/97

1.1 GENERAL REQUIREMENTS
1.1.1 Site Plan
1.1.2 Identification of Employees
1.1.3 Employee Parking
1.2 AVAILABILITY AND USE OF UTILITY SERVICES
1.2.1 Payment for Utility Services
1.2.2 Meters and Temporary Connections
1.2.3 Advance Deposit
1.2.4 Final Meter Reading
1.2.5 Sanitation
1.2.6 Telephone
1.3 BULLETIN BOARD, PROJECT SIGN, AND PROJECT SAFETY SIGN
1.3.1 Bulletin Board
1.3.2 Project and Safety Signs
1.4 PROTECTION AND MAINTENANCE OF TRAFFIC
1.4.1 Not Used
1.4.2 Barricades
1.5 CONTRACTOR'S TEMPORARY FACILITIES
1.5.1 Administrative Field Offices
1.5.2 Storage Area
1.5.3 Supplemental Storage Area
1.5.4 Appearance of Trailers
1.5.5 Maintenance of Storage Area
1.5.6 Not Used
1.5.7 Security Provisions
1.6 GOVERNMENT FIELD OFFICE
1.6.1 Resident Engineer's Office
1.6.2 Trailer-Type Mobile Office
1.7 PLANT COMMUNICATION
1.8 TEMPORARY PROJECT SAFETY FENCING
1.9 CLEANUP
1.10 RESTORATION OF STORAGE AREA

-- End of Section Table of Contents --

SECTION 01500

TEMPORARY CONSTRUCTION FACILITIES
02/97

1.1 GENERAL REQUIREMENTS

1.1.1 Site Plan

The Contractor shall prepare a site plan indicating the proposed location and dimensions of any area to be fenced and used by the Contractor, the number of trailers to be used, avenues of ingress/egress to the fenced area and details of the fence installation. Any areas which may have to be graveled to prevent the tracking of mud shall also be identified. The Contractor shall also indicate if the use of a supplemental or other staging area is desired.

1.1.2 Identification of Employees

The Contractor shall be responsible for furnishing to each employee, and for requiring each employee engaged on the work to display, identification as approved and directed by the Contracting Officer. Prescribed identification shall immediately be delivered to the Contracting Officer for cancellation upon release of any employee. When required, the Contractor shall obtain and provide fingerprints of persons employed on the project. Contractor and subcontractor personnel shall wear identifying markings on hard hats clearly identifying the company for whom the employee works.

1.1.3 Employee Parking

Contractor employees shall park privately owned vehicles in an area designated by the Contracting Officer. This area will be within reasonable walking distance of the construction site. Contractor employee parking shall not interfere with existing and established parking requirements of the military installation.

1.2 AVAILABILITY AND USE OF UTILITY SERVICES

1.2.1 Payment for Utility Services

The Government will make all reasonably required utilities available to the Contractor from existing outlets and supplies, as specified in the contract. Unless otherwise provided in the contract, the amount of each utility service consumed shall be charged to or paid for by the Contractor at prevailing rates charged to the Government or, where the utility is produced by the Government, at reasonable rates determined by the Contracting Officer. The Contractor shall carefully conserve any utilities furnished without charge.

1.2.2 Meters and Temporary Connections

The Contractor, at its expense and in a manner satisfactory to the Contracting Officer, shall provide and maintain necessary temporary connections, distribution lines, and meter bases (Government will provide meters) required to measure the amount of each utility used for the purpose

of determining charges. The Contractor shall notify the Contracting Officer, in writing, 5 working days before final electrical connection is desired so that a utilities contract can be established. The Government will provide a meter and make the final hot connection after inspection and approval of the Contractor's temporary wiring installation. The Contractor shall not make the final electrical connection.

1.2.3 Advance Deposit

An advance deposit for utilities consisting of an estimated month's usage or a minimum of $50.00 will be required. The last monthly bills for the fiscal year will normally be offset by the deposit and adjustments will be billed or returned as appropriate. Services to be rendered for the next fiscal year, beginning 1 October, will require a new deposit. Notification of the due date for this deposit will be mailed to the Contractor prior to the end of the current fiscal year.

1.2.4 Final Meter Reading

Before completion of the work and final acceptance of the work by the Government, the Contractor shall notify the Contracting Officer, in writing, 5 working days before termination is desired. The Government will take a final meter reading, disconnect service, and remove the meters. The Contractor shall then remove all the temporary distribution lines, meter bases, and associated paraphernalia. The Contractor shall pay all outstanding utility bills before final acceptance of the work by the Government.

1.2.5 Sanitation

The Contractor shall provide and maintain within the construction area minimum field-type sanitary facilities approved by the Contracting Officer. Government toilet facilities will not be available to Contractor's personnel.

1.2.6 Telephone

The Contractor shall make arrangements and pay all costs for telephone facilities desired.

1.3 BULLETIN BOARD, PROJECT SIGN, AND PROJECT SAFETY SIGN

1.3.1 Bulletin Board

Immediately upon beginning of work, the Contractor shall provide a weatherproof glass-covered bulletin board not less than 36 by 48 inches in size for displaying the Equal Employment Opportunity poster, a copy of the wage decision contained in the contract, Wage Rate Information poster, and other information approved by the Contracting Officer. The bulletin board shall be located at the project site in a conspicuous place easily accessible to all employees, as approved by the Contracting Officer. Legible copies of the aforementioned data shall be displayed until work is completed. Upon completion of work the bulletin board shall be removed by and remain the property of the Contractor.

1.3.2 Project and Safety Signs

The requirements for the signs, their content, and location shall be as shown on the drawings. The signs shall be erected within 15 days after

receipt of the notice to proceed. The data required by the safety sign shall be corrected daily, with light colored metallic or non-metallic numerals. Upon completion of the project, the signs shall be removed from the site.

1.4 PROTECTION AND MAINTENANCE OF TRAFFIC

During construction the Contractor shall provide access and temporary relocated roads as necessary to maintain traffic. The Contractor shall maintain and protect traffic on all affected roads during the construction period except as otherwise specifically directed by the Contracting Officer. Measures for the protection and diversion of traffic, including the provision of watchmen and flagmen, erection of barricades, placing of lights around and in front of equipment and the work, and the erection and maintenance of adequate warning, danger, and direction signs, shall be as required by the State and local authorities having jurisdiction. The traveling public shall be protected from damage to person and property. The Contractor's traffic on roads selected for hauling material to and from the site shall interfere as little as possible with public traffic. The Contractor shall investigate the adequacy of existing roads and the allowable load limit on these roads. The Contractor shall be responsible for the repair of any damage to roads caused by construction operations.

1.4.1 Not Used

1.4.2 Barricades

The Contractor shall erect and maintain temporary barricades to limit public access to hazardous areas. Such barricades shall be required whenever safe public access to paved areas such as roads, parking areas or sidewalks is prevented by construction activities or as otherwise necessary to ensure the safety of both pedestrian and vehicular traffic. Barricades shall be securely placed, clearly visible with adequate illumination to provide sufficient visual warning of the hazard during both day and night.

1.5 CONTRACTOR'S TEMPORARY FACILITIES

1.5.1 Administrative Field Offices

The Contractor shall provide and maintain administrative field office facilities within the construction area at the designated site. Government office and warehouse facilities will not be available to the Contractor's personnel.

1.5.2 Storage Area

The Contractor shall designate a temporary storage area on the site. Trailers, materials, or equipment shall not be placed or stored outside the designated area unless such trailers, materials, or equipment are assigned a separate and distinct storage area by the Contracting Officer away from the vicinity of the construction site but within the military boundaries. Materials shall not be stockpiled outside the designated area in preparation for the next day's work. Mobile equipment, such as tractors, wheeled lifting equipment, cranes, trucks, and like equipment, shall be parked within the designated area at the end of each work day.

1.5.3 Supplemental Storage Area

Upon Contractor's request, the Contracting Officer will designate another

or supplemental area for the Contractor's use and storage of trailers, equipment, and materials. This area may not be in close proximity of the construction site but shall be within the military boundaries. The Contractor shall be responsible for cleanliness and orderliness of the area used and for the security of any material or equipment stored in this area. Utilities will not be provided to this area by the Government.

1.5.4 Appearance of Trailers

Trailers utilized by the Contractor for administrative or material storage purposes shall present a clean and neat exterior appearance and shall be in a state of good repair. Trailers which, in the opinion of the Contracting Officer, require exterior painting or maintenance will not be allowed on the military property.

1.5.5 Maintenance of Storage Area

Should the Contractor elect to traverse, with construction equipment or other vehicles, grassed or unpaved areas which are not established roadways, such areas shall be covered with a layer of gravel as necessary to prevent rutting and the tracking of mud onto paved or established roadways; gravel gradation shall be at the Contractor's discretion. Grass located within the boundaries of the construction site shall be mowed for the duration of the project. Grass and vegetation along fences, buildings, under trailers, and in areas not accessible to mowers shall be edged or trimmed neatly.

1.5.6 Not Used

1.5.7 Security Provisions

Adequate outside security lighting shall be provided at the Contractor's temporary facilities. The Contractor shall be responsible for the security of its own equipment; in addition, the Contractor shall notify the appropriate law enforcement agency requesting periodic security checks of the temporary project field office.

1.6 GOVERNMENT FIELD OFFICE

1.6.1 Resident Engineer's Office

The Contractor shall provide the Government Resident Engineer with an office, approximately 200 square feet in floor area, located where directed and providing space heat, electric light and power, and toilet facilities consisting of one lavatory and one water closet complete with connections to water and sewer mains. A mail slot in the door or a lockable mail box mounted on the surface of the door shall be provided. At completion of the project, the office shall remain the property of the Contractor and shall be removed from the site. Utilities shall be connected and disconnected in accordance with local codes and to the satisfaction of the Contracting Officer.

1.6.2 Trailer-Type Mobile Office

The Contractor may, at its option, furnish and maintain a trailer-type mobile office acceptable to the Contracting Officer and providing as a minimum the facilities specified above. The trailer shall be securely anchored to the ground at all four corners to guard against movement during high winds.

1.7 PLANT COMMUNICATION

Whenever the Contractor has the individual elements of its plant so located that operation by normal voice between these elements is not satisfactory, the Contractor shall install a satisfactory means of communication, such as telephone or other suitable devices. The devices shall be made available for use by Government personnel.

1.8 TEMPORARY PROJECT SAFETY FENCING

As soon as practicable, but not later than 15 days after the date established for commencement of work, the Contractor shall furnish and erect temporary project safety fencing at the work site. The safety fencing shall be a high visibility orange colored, high density polyethylene grid or approved equal, a minimum of 42 inches high, supported and tightly secured to steel posts located on maximum 10 foot centers, constructed at the approved location. The safety fencing shall be maintained by the Contractor during the life of the contract and, upon completion and acceptance of the work, shall become the property of the Contractor and shall be removed from the work site.

1.9 CLEANUP

Construction debris, waste materials, packaging material and the like shall be removed from the work site daily. Any dirt or mud which is tracked onto paved or surfaced roadways shall be cleaned away. Materials resulting from demolition activities which are salvageable shall be stored within the fenced area described above or at the supplemental storage area. Stored material not in trailers, whether new or salvaged, shall be neatly stacked when stored.

1.10 RESTORATION OF STORAGE AREA

Upon completion of the project and after removal of trailers, materials, and equipment from within the fenced area, the fence shall be removed and will become the property of the Contractor. Areas used by the Contractor for the storage of equipment or material, or other use, shall be restored to the original or better condition. Gravel used to traverse grassed areas shall be removed and the area restored to its original condition, including top soil and seeding as necessary.

-- End of Section --

SECTION TABLE OF CONTENTS

DIVISION 02 - SITE WORK

SECTION 02220

DEMOLITION

12/97

PART 1 GENERAL

1.1 REFERENCES
1.2 GENERAL REQUIREMENTS
1.3 SUBMITTALS
1.4 DUST CONTROL
1.5 PROTECTION
1.5.1 Protection of Personnel
1.5.2 Protection of Structures
1.5.3 Protection of Existing Property
1.5.4 Protection From the Weather
1.5.5 Protection of Trees
1.5.6 Environmental Protection
1.6 BURNING
1.7 USE OF EXPLOSIVES
1.8 AVAILABILITY OF WORK AREAS

PART 2 PRODUCTS (Not Applicable)

PART 3 EXECUTION

3.1 EXISTING STRUCTURES
3.2 UTILITIES
3.3 FILLING
3.4 DISPOSITION OF MATERIAL
3.4.1 Salvageable Items and Material
3.4.1.1 Material Salvaged for the Contractor
3.4.1.2 Items Salvaged for the Government
3.4.1.3 Not Used
3.4.1.4 Historical Items
3.4.2 Unsalvageable Material
3.5 CLEAN UP
3.6 PAVEMENTS

-- End of Section Table of Contents --

SECTION 02220

DEMOLITION
12/97

PART 1 GENERAL

1.1 REFERENCES

The publications listed below form a part of this specification to the extent referenced. The publications are referred to in the text by basic designation only.

ENGINEERING MANUALS (EM)

EM 385-1-1	(1996) U.S. Army Corps of Engineers Safety and Health Requirements Manual

1.2 GENERAL REQUIREMENTS

The work includes demolition of buildings 711 and 716 on the 934th Base, salvage of identified items and materials, and removal of resulting rubbish and debris. Rubbish and debris shall be removed from Government property daily, unless otherwise directed, to avoid accumulation at the demolition site. Materials that cannot be removed daily shall be stored in areas specified by the Contracting Officer. In the interest of occupational safety and health, the work shall be performed in accordance with EM 385-1-1, Section 23, Demolition, and other applicable Sections. In the interest of conservation, salvage shall be pursued to the maximum extent possible; salvaged items and materials shall be disposed of as specified.

1.3 SUBMITTALS

Government approval is required for submittals with a "G" designation; submittals not having a "G" designation are for information only. When used, a designation following the "G" designation identifies the office that will review the submittal for the Government. The following shall be submitted in accordance with Section 01330 SUBMITTAL PROCEDURES:

SD-03 Product Data

Work Plan; G-AO.

The procedures proposed for the accomplishment of the work. The procedures shall provide for safe conduct of the work, including procedures and methods to provide necessary supports, lateral bracing and shoring when required, careful removal and disposition of materials specified to be salvaged, protection of property which is to remain undisturbed, coordination with other work in progress, and timely disconnection of utility services. The procedures shall include a detailed description of the methods and equipment to be used for each operation, and the sequence of operations in accordance with EM 385-1-1.

1.4 DUST CONTROL

The amount of dust resulting from demolition shall be controlled to prevent the spread of dust to occupied portions of the construction site and to avoid creation of a nuisance in the surrounding area. Use of water will not be permitted when it will result in, or create, hazardous or objectionable conditions such as ice, flooding and pollution.

1.5 PROTECTION

1.5.1 Protection of Personnel

During the demolition work the Contractor shall continuously evaluate the condition of the structure being demolished and take immediate action to protect all personnel working in and around the demolition site. No area, section, or component of floors, roofs, walls, columns, pilasters, or other structural element will be allowed to be left standing without sufficient bracing, shoring, or lateral support to prevent collapse or failure while workmen remove debris or perform other work in the immediate area.

1.5.2 Protection of Structures

Floors, roofs, walls, columns, pilasters, and other structural components that are designed and constructed to stand without lateral support or shoring, and are determined to be in stable condition, may remain standing without additional bracing, shoring, of lateral support until demolished, unless directed otherwise by the Contracting Officer. The Contractor shall ensure that no elements determined to be unstable are left unsupported and shall be responsible for placing and securing bracing, shoring, or lateral supports as may be required as a result of any cutting, removal, or demolition work performed under this contract.

1.5.3 Protection of Existing Property

Before beginning any demolition work, the Contractor shall survey the site and examine the drawings and specifications to determine the extent of the work. The Contractor shall take necessary precautions to avoid damage to existing items to remain in place, to be reused, or to remain the property of the Government; any damaged items shall be repaired or replaced as approved by the Contracting Officer. The Contractor shall coordinate the work of this section with all other work and shall construct and maintain shoring, bracing, and supports as required. The Contractor shall ensure that structural elements are not overloaded and shall be responsible for increasing structural supports or adding new supports as may be required as a result of any cutting, removal, or demolition work performed under this contract.

1.5.4 Protection From the Weather

Salvageable materials and equipment shall be protected from the weather at all times.

1.5.5 Protection of Trees

Trees within the project site which might be damaged during demolition, and which are indicated to be left in place, shall be protected by a high wood slat now fence. The fence shall be securely erected a minimum of from the trunk of individual trees or follow the outer perimeter of branches or clumps of trees. Any tree designated to remain that is damaged during the work under this contract shall be replaced in kind or as approved by the

Contracting Officer.

1.5.6 Environmental Protection

The work shall comply with the requirements of Section 01410 ENVIRONMENT PROTECTION.

1.6 BURNING

The use of burning at the project site for the disposal of refuse and debris will not be permitted.

1.7 USE OF EXPLOSIVES

Use of explosives will not be permitted.

1.8 AVAILABILITY OF WORK AREAS

Areas within the boundaries of the building site which are designated to have selective site demolition work will be available at the start of the work for the project. Demolition of Buildings 711 and 716 shall be accomplished after substantial completion of the final phase of the Lodging facility.

PART 2 PRODUCTS (Not Applicable)

PART 3 EXECUTION

3.1 EXISTING STRUCTURES

Existing structures indicated shall be removed to bottom of foundation walls. All interior walls, other than retaining walls and partitions, shall be completely removed including all below grade construction. Sidewalks, curbs, gutters and street light bases shall be removed as indicated.

3.2 UTILITIES

Existing utilities within the buildings shall be removed as indicated and capped at connections to mains. When utility lines are encountered that are not indicated on the drawings, the Contracting Officer shall be notified prior to further work in that area.

3.3 FILLING

Holes, open basements and other hazardous openings shall be filled in accordance with Section 02315 EXCAVATION, FILLING AND BACKFILLING FOR BUILDINGS.

3.4 DISPOSITION OF MATERIAL

Title to material and equipment to be demolished, except Government salvage and historical items, is vested in the Contractor upon receipt of notice to proceed. The Government will not be responsible for the condition, loss or damage to such property after notice to proceed.

3.4.1 Salvageable Items and Material

Contractor shall salvage items and material to the maximum extent possible.

3.4.1.1 Material Salvaged for the Contractor

Material salvaged for the Contractor shall be stored as approved by the Contracting Officer and shall be removed from Government property before completion of the contract. Material salvaged for the Contractor shall not be sold on the site.

3.4.1.2 Items Salvaged for the Government

Salvaged items to remain the property of the Government shall be removed in a manner to prevent damage, and packed or crated to protect the items from damage while in storage or during shipment. Items damaged during removal or storage shall be repaired or replaced to match existing items. Containers shall be properly identified as to contents.

3.4.1.3 Not Used

3.4.1.4 Historical Items

Historical items shall be removed in a manner to prevent damage. The following historical items shall be delivered to the Government for disposition: Corner stones, contents of corner stones, and document boxes wherever located on the site.

3.4.2 Unsalvageable Material

Concrete, masonry, and other noncombustible material, shall be disposed of off the site. Combustible material shall be disposed of off the site.

3.5 CLEAN UP

Debris and rubbish shall be removed from basement and similar excavations. Debris shall be removed and transported in a manner that prevents spillage on streets or adjacent areas. Local regulations regarding hauling and disposal shall apply.

3.6 PAVEMENTS

Existing pavements designated for removal shall be saw cut and removed in accordance with the details shown on the drawings and to the limits and to a minimum depth of .

-- End of Section --

This page was intentionally left blank for duplex printing.

SECTION TABLE OF CONTENTS

DIVISION 02 - SITE WORK

SECTION 02230

CLEARING AND GRUBBING

PART 1 GENERAL

1.1 DEFINITIONS
1.1.1 Clearing
1.1.2 Grubbing
1.2 SUBMITTALS

PART 2 PRODUCTS (Not Applicable)

PART 3 EXECUTION

3.1 CLEARING
3.2 GRUBBING
3.3 TREE REMOVAL
3.4 DISPOSAL OF MATERIALS
3.4.1 Miscellaneous Materials

-- End of Section Table of Contents --

SECTION 02230

CLEARING AND GRUBBING

PART 1 GENERAL

1.1 DEFINITIONS

1.1.1 Clearing

Clearing shall consist of the felling, trimming, and cutting of trees into sections and the satisfactory disposal of the trees and other vegetation designated for removal, including down timber, snags, brush, and rubbish occurring in the areas to be cleared.

1.1.2 Grubbing

Grubbing shall consist of the removal and disposal of stumps, roots larger than 75 mm in diameter, and matted roots from the designated grubbing areas.

1.2 SUBMITTALS

Government approval is required for submittals with a "G" designation; submittals not having a "G" designation are for information only. When used, a designation following the "G" designation identifies the office that will review the submittal for the Government. The following shall be submitted in accordance with Section 01330 SUBMITTAL PROCEDURES:

SD-03 Product Data

Materials other than Salable Timber; G-AO

Written permission to dispose of such products on private property shall be filed with the Contracting Officer.

PART 2 PRODUCTS (Not Applicable)

PART 3 EXECUTION

3.1 CLEARING

Trees, stumps, roots, brush, and other vegetation in areas to be cleared shall be cut off flush with or below the original ground surface, except such trees and vegetation as may be indicated or directed to be left standing. Trees designated to be left standing within the cleared areas shall be trimmed of dead branches 40 mm or more in diameter and shall be trimmed of all branches the heights indicated or directed. Limbs and branches to be trimmed shall be neatly cut close to the bole of the tree or main branches. Cuts more than 40 mm in diameter shall be painted with an approved tree-wound paint. Trees and vegetation to be left standing shall be protected from damage incident to clearing, grubbing, and construction operations by the erection of barriers or by such other means as the circumstances require. Clearing shall also include the removal and

disposal of structures that obtrude, encroach upon, or otherwise obstruct the work.

3.2 GRUBBING

Material to be grubbed, together with logs and other organic or metallic debris not suitable for foundation purposes, shall be removed to a depth of not less than 455 mm below the original surface level of the ground in areas indicated to be grubbed and in areas indicated as construction areas under this contract, such as areas for buildings, and areas to be paved. Depressions made by grubbing shall be filled with suitable material and compacted to make the surface conform with the original adjacent surface of the ground.

3.3 TREE REMOVAL

Where indicated or directed, trees and stumps that are designated as trees shall be removed from areas outside those areas designated for clearing and grubbing. This work shall include the felling of such trees and the removal of their stumps and roots as specified in paragraph GRUBBING. Trees shall be disposed of as specified in paragraph DISPOSAL OF MATERIALS.

3.4 DISPOSAL OF MATERIALS

3.4.1 Miscellaneous Materials

Logs, stumps, roots, brush, rotten wood, and other refuse from the clearing and grubbing operations, except for salable timber, shall be disposed of in off-site locations at the Contractor's responsibility except when otherwise directed in writing. No refuse may be burned on the construction site.

-- End of Section --

This page was intentionally left blank for duplex printing.

SECTION TABLE OF CONTENTS

DIVISION 02 - SITE WORK

SECTION 02300

EARTHWORK

PART 1 GENERAL

1.1 REFERENCES
1.2 DEFINITIONS
1.2.1 Satisfactory Materials
1.2.2 Unsatisfactory Materials
1.2.3 Degree of Compaction
1.2.4 Topsoil
1.3 SUBMITTALS
1.4 SUBSURFACE DATA
1.5 CLASSIFICATION OF EXCAVATION
1.6 BLASTING
1.7 UTILIZATION OF EXCAVATED MATERIALS

PART 2 PRODUCTS (Not Applicable)

PART 3 EXECUTION

3.1 STRIPPING OF TOPSOIL
3.2 GENERAL EXCAVATION
3.2.1 Ditches, Gutters, and Channel Changes
3.2.2 Drainage Structures
3.3 SELECTION OF BORROW MATERIAL
3.4 OPENING AND DRAINAGE OF EXCAVATION AND BORROW PITS
3.5 GRADING AREAS
3.6 BACKFILL
3.7 PREPARATION OF GROUND SURFACE FOR EMBANKMENTS
3.7.1 General Requirements
3.7.2 Frozen Material
3.8 EMBANKMENTS
3.8.1 Earth Embankments
3.9 SUBGRADE PREPARATION
3.9.1 Construction
3.9.2 Compaction
3.10 FINISHING
3.11 PLACING TOPSOIL
3.12 TESTING
3.12.1 Fill and Backfill Material Gradation
3.12.2 In-Place Densities of fills and Backfills
3.12.3 Moisture Contents
3.12.4 Optimum Moisture and Laboratory Maximum Density
3.12.5 Tolerance Tests for Subgrades
3.13 SUBGRADE AND EMBANKMENT PROTECTION

-- End of Section Table of Contents --

SECTION 02300

EARTHWORK

PART 1 GENERAL

1.1 REFERENCES

The publications listed below form a part of this specification to the extent referenced. The publications are referred to in the text by basic designation only.

AMERICAN SOCIETY FOR TESTING AND MATERIALS (ASTM)

ASTM D 422	(1963; R 1990) Particle-Size Analysis of Soils
ASTM D 1556	(1990; R 1996) Density and Unit Weight of Soil in Place by the Sand-Cone Method
ASTM D 2487	(1993) Classification of Soils for Engineering Purposes (Unified Soil Classification System)
ASTM D 2922	(1996) Density of Soil and Soil-Aggregate in Place by Nuclear Methods (Shallow Depth)
ASTM D 2937	(1994) Density of Soil in Place by the Drive-Cylinder Method
ASTM D 3017	(1988; R 1993) Water Content of Soil and Rock in Place by Nuclear Methods (Shallow Depth)

1.2 DEFINITIONS

1.2.1 Satisfactory Materials

Satisfactory materials shall comprise any materials classified by ASTM D 2487 as GW, GP, SW. GM, GC, SM, and SC, or combinations of these soils such as SW-SM, etc. may be used as fill if located above the water table and containing less than 35% passing the 0.075 mm sieve and have a liquid limit (LL) of less than 30% and having a maximum particle size of 100 mm. All soil shall be free of trash, debris, roots or other organic matter, or stones larger than 75 mm in any dimension.

1.2.2 Unsatisfactory Materials

Materials which do not comply with the requirements for satisfactory materials are unsatisfactory. Unsatisfactory materials also include man-made fills; trash; refuse; backfills from previous construction; and material classified as satisfactory which contains root and other organic

matter or frozen material. The Contracting Officer shall be notified of any contaminated materials.

1.2.3 Degree of Compaction

Degree of compaction required is expressed as a percentage of the maximum density obtained by the test procedure presented in ASTM D 1557 abbreviated as a percent of laboratory maximum density.

1.2.4 Topsoil

Topsoil shall be stripped below existing grade within the designated excavations and grading lines to at least 200 mm below the surface. Topsoil meeting PLANTINGS requirements shall be deposited in storage piles for later use. Excess topsoil shall be disposed as specified for excess excavated material.

Fertile, friable, natural loam containing humus and capable of sustaining vigorous plant growth within a pH range of 5.5 to 7.5 and suitable for topsoil may be obtained from offsite areas. Soil shall be free of noxious weeds or seeds or clods of hard earth, plants or their roots,sticks and other extraneous matter.

1.3 SUBMITTALS

Government approval is required for submittals with a "G" designation; submittals not having a "G" designation are for information only. When used, a designation following the "G" designation identifies the office that will review the submittal for the Government. The following shall be submitted in accordance with Section 01330 SUBMITTAL PROCEDURES:

SD-03 Product Data

Earthwork; G-AO

Procedure and location for disposal of unused satisfactory material.

SD-06 Test Reports

Testing; G-AO

Within 24 hours of conclusion of physical tests, three copies of test results, including calibration curves and results of calibration tests.

SD-07 Certificates

Testing; G-AO

Qualifications of the commercial testing laboratory or Contractor's testing facilities.

1.4 SUBSURFACE DATA

Subsurface soil boring logs are appended to the SPECIAL CONTRACT REQUIREMENTS. The subsoil investigation report and samples of materials taken from subsurface investigations may be examined at the offices of American Engineering and Testing, Inc., 550 Cleveland Avenue North, St. Paul, MN 55114 (651) 659 - 9001. These data represent the best subsurface information available; however, variations may exist in the subsurface

between boring locations.

1.5 CLASSIFICATION OF EXCAVATION

No consideration will be given to the nature of the materials, and all excavation will be designated as unclassified excavation.

1.6 BLASTING

Blasting will not be permitted.

1.7 UTILIZATION OF EXCAVATED MATERIALS

Unsatisfactory materials removed from excavations shall be disposed of off-site. Satisfactory material removed from excavations shall be used, insofar as practicable, in the construction of fills, embankments, subgrades, shoulders, bedding (as backfill), and for similar purposes. No satisfactory excavated material shall be wasted without specific written authorization.

PART 2 PRODUCTS (Not Applicable)

PART 3 EXECUTION

3.1 STRIPPING OF TOPSOIL

Where indicated or directed, topsoil shall be stripped to a depth of 200mm Topsoil shall be spread on areas already graded and prepared for topsoil, or transported and deposited in stockpiles convenient to areas that are to receive application of the topsoil later, or at locations indicated or specified. Topsoil shall be kept separate from other excavated materials, brush, litter, objectionable weeds, roots, stones larger than 50 mm in diameter, and other materials that would interfere with planting and maintenance operations.

3.2 GENERAL EXCAVATION

The Contractor shall perform excavation of every type of material encountered within the limits of the project to the lines, grades, and elevations indicated and as specified. Grading shall be in conformity with the typical sections shown and the tolerances specified in paragraph FINISHING. Satisfactory excavated materials shall be transported to and placed in fill or embankment within the limits of the work. Unsatisfactory materials encountered within the limits of the work shall be excavated below grade and replaced with satisfactory materials as directed. Such excavated material and the satisfactory material ordered as replacement shall be included in excavation. During construction, excavation and fill shall be performed in a manner and sequence that will provide proper drainage at all times.

3.2.1 Ditches, Gutters, and Channel Changes

Excavation of ditches, gutters, and channel changes shall be accomplished by cutting accurately to the cross sections, grades, and elevations shown. Ditches and gutters shall not be excavated below grades shown. Excessive open ditch or gutter excavation shall be backfilled with satisfactory, thoroughly compacted, material or with suitable stone or cobble to grades shown. Material excavated shall be disposed of as shown or as directed, except that in no case shall material be deposited less than from the edge

of a ditch. The Contractor shall maintain excavations free from detrimental quantities of leaves, brush, sticks, trash, and other debris until final acceptance of the work.

3.2.2 Drainage Structures

Excavations shall be made to the lines, grades, and elevations shown, or as directed. Trenches and foundation pits shall be of sufficient size to permit the placement and removal of forms for the full length and width of structure footings and foundations as shown. Rock or other hard foundation material shall be cleaned of loose debris and cut to a firm, level, stepped, or serrated surface. Loose disintegrated rock and thin strata shall be removed. When concrete or masonry is to be placed in an excavated area, the bottom of the excavation shall not be disturbed. Excavation to the final grade level shall not be made until just before the concrete or masonry is to be placed.

3.3 SELECTION OF BORROW MATERIAL

Borrow material shall be selected to meet the requirements and conditions of the particular fill or embankment for which it is to be used. Borrow material shall be obtained from approved off-site sources. Unless otherwise provided in the contract, the Contractor shall obtain from the owners the right to procure material, pay royalties and other charges involved, and bear the expense of developing the sources, including rights-of-way for hauling. Borrow material from approved sources on Government-controlled land may be obtained without payment of royalties. No borrow shall be obtained within the limits of the project site.

3.4 OPENING AND DRAINAGE OF EXCAVATION AND BORROW PITS

The Contractor shall notify the Contracting Officer sufficiently in advance of the opening of any excavation or borrow pit to permit elevations and measurements of the undisturbed ground surface to be taken. Except as otherwise permitted, borrow pits and other excavation areas shall be excavated providing adequate drainage. Overburden and other spoil material shall be transported to designated spoil areas or otherwise disposed of as directed. Borrow pits shall be neatly trimmed and drained after the excavation is completed. The Contractor shall ensure that excavation of any area, operation of borrow pits, or dumping of spoil material results in minimum detrimental effects on natural environmental conditions.

3.5 GRADING AREAS

Where indicated, work will be divided into grading areas within which satisfactory excavated material shall be placed in embankments, fills, and required backfills. The Contractor shall not haul satisfactory material excavated in one grading area to another grading area except when so directed in writing.

3.6 BACKFILL

Backfill adjacent to any and all types of structures shall be placed and compacted to at least 90 percent laboratory maximum density for cohesive materials or 95 percent laboratory maximum density for cohesionless materials in accordance with MnDOT 2112, to prevent wedging action or eccentric loading upon or against the structure. Ground surface on which backfill is to be placed shall be prepared as specified in paragraph PREPARATION OF GROUND SURFACE FOR EMBANKMENTS. Compaction requirements for

backfill materials shall also conform to the applicable portions of paragraphs PREPARATION OF GROUND SURFACE FOR EMBANKMENTS, EMBANKMENTS, and SUBGRADE PREPARATION, Section 02315 EXCAVATION, FILLING and BACKFILLING FOR BUILDINGS; and Section 02316 EXCAVATION, TRENCHING, AND BACKFILLING FOR UTILITIES SYSTEMS. Compaction shall be accomplished by sheepsfoot rollers, pneumatic-tired rollers, steel-wheeled rollers, vibratory compactors, or other approved equipment.

3.7 PREPARATION OF GROUND SURFACE FOR EMBANKMENTS

3.7.1 General Requirements

Soil on the site near the surface has a high amount of clay with high moisture content. This soil can become difficult to work with if low ground pressure equipment is not used. Increased difficulties can be expected during periods of wet weather, particularly during the spring runoff. Subsurface water level fluctuations may occur over time due to seasonal and irrigation effects. Generally, the water level is highest in the spring and early summer, and lowest in the fall and winter months. If excavations extend down near the subsurface water level, care should be taken to dewater the excavations. The subgrade should not be scarified and recompacted prior to fill placement. Care should be taken not to disturb the natural soils below building areas. All excavation and embankment work shall be accomplished during the dry season if possible.

3.7.2 Frozen Material

Embankment shall not be placed on a foundation which contains frozen material, or which has been subjected to freeze-thaw action. This prohibition encompasses all foundation types, including the natural ground, all prepared subgrades (whether in an excavation or on an embankment) and all layers of previously placed and compacted earth fill which become the foundations for successive layers of earth fill. All material that freezes or has been subjected to freeze-thaw action during the construction work, or during periods of temporary shutdowns, such as, but not limited to, nights, holidays, weekends, winter shutdowns, or earthwork operations, shall be removed to a depth that is acceptable to the Contracting Officer and replaced with new material. Alternatively, the material will be thawed, dried, reworked, and recompacted to the specified criteria before additional material is placed. The Contracting Officer will determine when placement of fill shall cease due to cold weather. The Contracting Officer may elect to use average daily air temperatures, and/or physical observation of the soils for his determination. Embankment material shall not contain frozen clumps of soil, snow, or ice.

3.8 EMBANKMENTS

3.8.1 Earth Embankments

Earth embankments shall be constructed from satisfactory materials free of organic or frozen material and rocks with any dimension greater than The material shall be placed in successive horizontal layers of loose material not more than 200 mm in depth. Each layer shall be spread uniformly on a soil surface that has been moistened or aerated as necessary. After spreading, each layer shall be broken up; moistened or aerated as necessary; thoroughly mixed; and compacted to at least 90 percent laboratory maximum density . Compaction requirements for the upper portion of earth embankments forming subgrade for pavements shall be identical with those requirements specified in paragraph SUBGRADE PREPARATION. Compaction

shall be accomplished by sheepsfoot rollers, pneumatic-tired rollers, steel-wheeled rollers, vibratory compactors, or other approved equipment.

3.9 SUBGRADE PREPARATION

3.9.1 Construction

Subgrade shall be shaped to line, grade, and cross section, and compacted as specified in accordance with MnDOT 2112. Soft or otherwise unsatisfactory material shall be removed and replaced with satisfactory excavated material or other approved material as directed. Low areas resulting from removal of unsatisfactory material shall be brought up to required grade with unsatisfactory materials, and the entire subgrade shall be shaped to line, grade, and cross section and compacted as specified. After rolling, the surface of the subgrade for roadways and parking areas shall not show deviations greater than 15 millimeters when tested with a 3 meter straightedge applied both parallel and at right angles to the centerline of the area. The elevation of the finish subgrade, other than those surfaces that are to be paved or where buildings are located, shall not vary more than 15 mm from the established grade and cross section.

3.9.2 Compaction

Compaction shall be accomplished by sheepsfoot rollers, pneumatic-tired rollers, steel-wheeled rollers, vibratory compactors, or other approved equipment. Except for paved areas, each layer of the embankment shall be compacted to at least the percent of laboratory maximum density as determined by ASTM D-1557 shown in Table 1.

Table 1

Fill to Support	Minimum Compaction
Foundations	95%
Concrete Slabs	90%
Retaining Wall backfill	88%
Landscaping	85%

3.10 FINISHING

The surface of excavations, embankments, and subgrades shall be finished to a smooth and compact surface in accordance with the lines, grades, and cross sections or elevations shown. The degree of finish for graded areas shall be within 30 mm of the grades and elevations indicated except that the degree of finish for subgrades shall be specified in paragraph SUBGRADE PREPARATION. Gutters and ditches shall be finished in a manner that will result in effective drainage. The surface of areas to be turfed shall be finished to a smoothness suitable for the application of turfing materials.

3.11 PLACING TOPSOIL

On areas to receive topsoil, the compacted subgrade soil shall be scarified to a 50 mm depth for bonding of topsoil with subsoil. Topsoil then shall be spread evenly to a thickness of 200 mm and graded to the elevations and slopes shown. Topsoil shall not be spread when frozen or excessively wet or dry. Material required for topsoil in excess of that produced by excavation within the grading limits shall be obtained from offsite areas.

3.12 TESTING

Testing shall be performed by an approved commercial testing laboratory or by the Contractor subject to approval in accordance with MnDOT 2112. If the Contractor elects to establish testing facilities, no work requiring testing will be permitted until the Contractor's facilities have been inspected and approved by the Contracting Officer. The first inspection will be at the expense of the Government. Cost incurred for any subsequent inspections required because of failure of the first inspection will be charged to the Contractor. Field in-place density shall be determined in accordance with ASTM D 1556 or ASTM D 2922. When ASTM D 2922 is used, the calibration curves shall be checked and adjusted using only the sand cone method as described in ASTM D 1556. ASTM D 2922 results in a wet unit weight of soil and when using this method ASTM D 3017 shall be used to determine the moisture content of the soil. The calibration curves furnished with the moisture gauges shall also be checked along with density calibration checks as described in ASTM D 3017; the calibration checks of both the density and moisture gauges shall be made at the beginning of a job on each different type of material encountered and at intervals as directed by the Contracting Officer. ASTM D 2937, Drive Cylinder Method shall be used only for soft, fine-grained, cohesive soils. When test results indicate, as determined by the Contracting Officer, that compaction is not as specified, the material shall be removed, replaced and recompacted to meet specification requirements. Tests on recompacted areas shall be performed to determine conformance with specification requirements. Inspections and test results shall be certified by a registered professional civil engineer. These certifications shall state that the tests and observations were performed by or under the direct supervision of the engineer and that the results are representative of the materials or conditions being certified by the tests. The following number of tests, if performed at the appropriate time, will be the minimum acceptable for each type operation.

3.12.1 Fill and Backfill Material Gradation

One test per 200 cubic meters stockpiled or in-place source material. Gradation of fill and backfill material shall be determined in accordance with ASTM D 422.

3.12.2 In-Place Densities of fills and Backfills

a. One test per 167 square or fraction thereof, of each lift of fill or backfill areas compacted by other than hand or hand-operated machines. The density of each lift of fill or backfill material for trenches, pits, building perimeters or other structures which are compacted with hand or hand-operated machines shall be tested as follows: One test per each area less than 166 square meters, or one test for each 30 linear meters of long narrow fills but no less than one test. If ASTM D 2922 is used, in-place densities shall be checked by ASTM D 1556 as follows: One check per lift for each 30 linear meters of long narrow fills, and a minimum of 1 check per lift for other fill and backfill areas.

3.12.3 Moisture Contents

In the stockpile, excavation, or borrow areas, a minimum of two tests per day per type of material or source of material being placed during stable weather conditions shall be performed. During unstable weather, tests shall be made as dictated by local conditions and approved by the Contracting Officer. Moisture content shall be tested in accordance with

ASTM D 2216.

3.12.4 Optimum Moisture and Laboratory Maximum Density

Tests shall be made for each type material or source of material including borrow material to determine the optimum moisture and laboratory maximum density values. One representative test per 150 cubic of fill and backfill, or when any change in material occurs which may affect the optimum moisture content or laboratory maximum density.

3.12.5 Tolerance Tests for Subgrades

Continuous checks on the degree of finish specified in paragraph SUBGRADE PREPARATION shall be made during construction of the subgrades.

3.13 SUBGRADE AND EMBANKMENT PROTECTION

During construction, embankments and excavations shall be kept shaped and drained. Ditches and drains along subgrade shall be maintained to drain effectively at all times. The finished subgrade shall not be disturbed by traffic or other operation and shall be protected and maintained by the Contractor in a satisfactory condition until ballast, subbase, base, or pavement is placed. The storage or stockpiling of materials on the finished subgrade will not be permitted. No subbase, base course, ballast, or pavement shall be laid until the subgrade has been checked and approved, and in no case shall subbase, base, surfacing, pavement, or ballast be placed on a muddy, spongy, or frozen subgrade.

-- End of Section --

This page was intentionally left blank for duplex printing.

SECTION TABLE OF CONTENTS

DIVISION 02 - SITE WORK

SECTION 02315

EXCAVATION, FILLING AND BACKFILLING FOR BUILDINGS

PART 1 GENERAL

1.1 REFERENCES
1.2 Definitions 1.2.1 Degree of Compactionon
1.3 SUBMITTALS

PART 2 PRODUCTS

2.1 MATERIALS
2.1.1 Satisfactory Materials
2.1.2 Unsatisfactory Materials
2.1.3 Expansive Soils
2.1.4 Nonfrost Susceptible (NFS) Material
2.2 CAPILLARY WATER BARRIER

PART 3 EXECUTION

3.1 CLEARING AND GRUBBING
3.2 TOPSOIL
3.3 EXCAVATION
3.4 DRAINAGE AND DEWATERING
3.4.1 Drainage
3.4.2 Dewatering
3.5 SHORING
3.6 CLASSIFICATION OF EXCAVATION
3.7 BLASTING
3.8 UTILITY AND DRAIN TRENCHES
3.9 BORROW
3.10 EXCAVATED MATERIALS
3.11 FINAL GRADE OF SURFACES TO SUPPORT CONCRETE
3.12 SUBGRADE PREPARATION
3.13 FILLING AND BACKFILLING
3.14 TESTING
3.14.1 In-Place Densities
3.14.1.1 In-Place Density of Subgrades
3.14.1.2 In-Place Density of Fills and Backfills
3.14.2 Moisture Content
3.14.3 Optimum Moisture and Laboratory Maximum Density
3.15 CAPILLARY WATER BARRIER
3.16 GRADING
3.17 SPREADING TOPSOIL
3.18 PROTECTION

-- End of Section Table of Contents --

SECTION 02315

EXCAVATION, FILLING AND BACKFILLING FOR BUILDINGS

PART 1 GENERAL

This section includes the excavation, filling and backfilling, dewatering, shoring and grading for building construction.

1.1 REFERENCES

The publications listed below form a part of this specification to the extent referenced. The publications are referred to in the text by basic designation only.

AMERICAN SOCIETY FOR TESTING AND MATERIALS (ASTM)

ASTM D 1556	(1990; R 1996) Density and Unit Weight of Soil in Place by the Sand-Cone Method
ASTM D 1557	(1991) Laboratory Compaction Characteristics of Soil Using Modified Effort (56,000 ft-lbf/cu. ft. (2,700 kN-m/cu.m.))
ASTM D 2216	(1992) Laboratory Determination of Water (Moisture) Content of Soil, and Rock
ASTM D 2487	(1993) Classification of Soils for Engineering Purposes (Unified Soil Classification System)
ASTM D 2922	(1996) Density of Soil and Soil-Aggregate in Place by Nuclear Methods (Shallow Depth)
ASTM D 2937	(1994) Density of Soil in Place by the Drive-Cylinder Method
ASTM D 3017	(1988; R 1993) Water Content of Soil and Rock in Place by Nuclear Methods (Shallow Depth)
ASTM D 4318	(1995a) Liquid Limit, Plastic Limit, and Plasticity Index of Soils

1.2 Definitions

1.2.1 Degree of Compactionon

Degree of compaction is expressed as a percentage of the maximum density obtained by the test procedure presented in ASTM D 1557, abbreviated as percent laboratory maximum density.

1.3 SUBMITTALS

Government approval is required for submittals with a "G" designation; submittals not having a "G" designation are for information only. When used, a designation following the "G" designation identifies the office that will review the submittal for the Government. The following shall be submitted in accordance with Section 01330 SUBMITTAL PROCEDURES:

SD-06 Test Reports

Field Density Tests; G-AO
Testing of Backfill Materials; G-AO

Copies of all laboratory and field test reports must be provided to the Contracting Officer within 24 hours of the completion of the test.

PART 2 PRODUCTS

2.1 MATERIALS

2.1.1 Satisfactory Materials

Satisfactory materials shall comprise any materials classified by ASTM D 2487 as GW, GP, or SW.GM, GC, SM and SC, or combinations of these soils such as SW-SM, etc... may be used as structural fill if located above the water table and containing less than 35% passing the 0.075 mm sieve and having a liquid limit (LL) of less than 30% and having a maximum particle size of 100 mm. All soil shall be free of trash, debris, roots or other organic matter, or stones larger than 75 mm in any dimension.

2.1.2 Unsatisfactory Materials

Materials which do not comply with the requirements for satisfactory materials are unsatisfactory. Unsatisfactory materials also include man-made fills, trash, refuse, or backfills from previous construction. Unsatisfactory material also includes material classified as satisfactory which contains root and other organic matter, frozen material, and stones larger than 75 mm in any dimension. The Contracting Officer shall be notified of any contaminated materials.

2.1.3 Expansive Soils

Expansive soils are defined as soils that have a plasticity index equal to or greater than 15% when tested in accordance with ASTM D 4318.

2.1.4 Nonfrost Susceptible (NFS) Material

Nonfrost susceptible material shall be a uniformly graded washed sand with a maximum particle size of 10 mm and less than 5 percent passing the 0.075 mm size sieve, and with not more than 3 percent by weight finer than 0.02 mm grain size free of friable deleterious, soluble and organic matter.

2.2 CAPILLARY WATER BARRIER

Capillary Water Barrier shall consist of clean, crushed, nonporous rock, crushed gravel, or uncrushed gravel. The maximum particle size shall be 37.5 mm and no more than 2 percent by weight shall pass the 4.75 mm size sieve.

PART 3 EXECUTION

3.1 CLEARING AND GRUBBING

Clearing and grubbing is specified in Section 02230 CLEARING AND GRUBBING. The areas within lines 1.5 meters outside of each building and structure line shall be cleared and grubbed of trees, stumps, roots, brush and other vegetation, debris, existing foundations, pavements, utility lines, structures, fences, and other items that would interfere with construction operations. Stumps, logs, roots, and other organic matter shall be completely removed and the resulting depressions shall be filled with satisfactory material, placed and compacted in accordance with paragraph FILLING AND BACKFILLING. Materials removed shall be disposed in areas outside the limits of Government-controlled property at the Contractor's responsibility.

3.2 TOPSOIL

Topsoil shall be stripped below existing grade within the designated excavations and grading lines to a depth of 200 mm. Topsoil meeting PLANTING requirements shall be deposited in storage piles for later use. Excess topsoil shall be disposed as specified for excess excavated material.

3.3 EXCAVATION

Excavation shall conform to the dimensions and elevations indicated for each building, structure, and footing except as specified, and shall include trenching for utility and foundation drainage systems to a point beyond the building line of each building and structure, excavation for outside grease interceptors, underground fuel tanks, and all work incidental thereof. Excavation shall extend a sufficient distance from walls and footings to allow for placing and removal of forms. Excavations below indicated depths will not be permitted except to remove unsatisfactory material. Unsatisfactory material encountered below the grades shown shall be removed as directed and replaced with satisfactory material. Satisfactory material removed below the depths indicated, without specific direction of the Contracting Officer, shall be replaced, at no additional cost to the Government, with satisfactory materials to the indicated excavation grade; except that concrete footings shall be increased in thickness to the bottom of the overdepth excavations and over-break in rock excavation. Satisfactory material shall be placed and compacted as specified in paragraph FILLING AND BACKFILLING. Determination of elevations and measurements of approved overdepth excavation of unsatisfactory material below grades indicated shall be done under the direction of the Contracting Officer.

3.4 DRAINAGE AND DEWATERING

General Note:

Soil on the site near the surface has a high amount of clay with high moisture content. This soil can become difficult to work with if low ground pressure equipment is not used. Increased difficulties can be expected during periods of wet weather, particularly during the spring runoff. Subsurface water level fluctuations may occur over time due to seasonal and irrigation effects. Generally, the water level is highest in the spring and early summer, and lowest in the fall and winter months. If excavations extend down near the subsurface water level, care should be taken to dewater the excavations. The subgrade should not be scarified and recompacted prior to

fill placement. Care should be taken not to disturb the natural soils below the building areas. All excavation and embankment work shall be accomplished during the dry season if possible.

3.4.1 Drainage

Surface water shall be directed away from excavation and construction sites to prevent erosion and undermining of foundations. Diversion ditches, dikes and grading shall be provided and maintained as necessary during construction. Excavated slopes and backfill surfaces shall be protected to prevent erosion and sloughing. Excavation shall be performed so that the site, the area immediately surrounding the site, and the area affecting operations at the site shall be continually and effectively drained.

3.4.2 Dewatering

Groundwater flowing toward or into excavations shall be controlled to prevent sloughing of excavation slopes and walls, boils, uplift and heave in the excavation and to eliminate interference with orderly progress of construction. French drains, sumps, ditches or trenches will not be permitted within 900 mm of the foundation of any structure, except with specific written approval, and after specific contractual provisions for restoration of the foundation area have been made. Control measures shall be taken by the time the excavation reaches the water level in order to maintain the integrity of the in situ material. While the excavation is open, the water level shall be maintained continuously, at least 1 meters below the working level.

3.5 SHORING

Shoring, including sheet piling, shall be furnished and installed as necessary to protect workmen, banks, adjacent paving, structures, and utilities. Shoring, bracing, and sheeting shall be removed as excavations are backfilled, in a manner to prevent caving.

3.6 CLASSIFICATION OF EXCAVATION

All excavation will be considered "unclassified excavation" regardless of the nature of material encountered including hard and compact materials such as cemented gravel, glacial till, and relatively soft or disintegrated rock that can be removed with conventional equipment. If material claimed as rock is encountered on the site, it shall not be excavated until the material has been cross-sectioned by the Contractor and the limits of removal approved by the Contracting officer.

3.7 BLASTING

Blasting will not be permitted on this project.

3.8 UTILITY AND DRAIN TRENCHES

Trenches for underground utilities systems and drain lines shall be excavated to the required alignments and depths. The bottoms of trenches shall be graded to secure the required slope and shall be tamped if necessary to provide a firm pipe bed. Recesses shall be excavated to accommodate bells and joints so that pipe will be uniformly supported for the entire length. Rock, where encountered, shall be excavated to a depth of at least 150 mm below the bottom of the pipe, and the overdepth shall be backfilled with satisfactory material placed and compacted in conformance

with paragraph FILLING AND BACKFILLING.

3.9 BORROW

Where satisfactory materials are not available in sufficient quantity from required excavations, approved materials shall be obtained as specified in Section 02300 EARTHWORK.

3.10 EXCAVATED MATERIALS

Satisfactory excavated material required for fill or backfill shall be placed in the proper section of the permanent work required under this section or shall be separately stockpiled if it cannot be readily placed. Satisfactory material in excess of that required for the permanent work and all unsatisfactory material shall be disposed of as specified in Section 02300 EARTHWORK.

3.11 FINAL GRADE OF SURFACES TO SUPPORT CONCRETE

Excavation to final grade shall not be made until just before concrete is to be placed.

3.12 SUBGRADE PREPARATION

Unsatisfactory material in surfaces to receive fill or in excavated areas shall be removed and replaced with satisfactory materials as directed by the Contracting Officer. The surface shall not be scarified prior to fill placement. Excavated sloped surfaces steeper than 1 vertical to 1 horizontal are anticipated for excavation in the clay. Excavated slopes on the order of 1 vertical to 1.5 horizontal are anticipated in dewatered sand excavations. Care should be taken not to allow sand to flow into the excavation. Material shall not be placed on surfaces that are muddy, frozen, or contain frost. Compaction shall be accomplished by sheepsfoot rollers, pneumatic-tired rollers, steel-wheeled rollers, or other approved equipment well suited to the soil being compacted. Material shall be moistened or aerated as necessary to plus or minus 2% percent of optimum moisture to provide the moisture content that will readily facilitate obtaining the specified compaction with the equipment used. Minimum subgrade density shall be as specified in paragraph FILLING AND BACKFILLING.

3.13 FILLING AND BACKFILLING

Satisfactory materials shall be used in bringing fills and backfills to the lines and grades indicated and for replacing unsatisfactory materials. Satisfactory materials shall be placed in horizontal layers not exceeding 200 mm in loose thickness, or 150 mm when hand-operated compactors are used. After placing, each layer shall be plowed, disked, or otherwise broken up, moistened or aerated as necessary, thoroughly mixed and compacted as specified. Backfilling shall not begin until construction below finish grade has been approved, underground utilities systems have been inspected, tested and approved, forms removed, and the excavation cleaned of trash and debris. Backfill shall be brought to indicated finish grade and shall include backfill for outside grease interceptors and underground fuel tanks. Backfill shall not be placed in wet or frozen areas. Where pipe is coated or wrapped for protection against corrosion, the backfill material up to an elevation 600 mm above sewer lines and 300 mm above other utility lines shall be free from stones larger than 25 mm in any dimension. Heavy equipment for spreading and compacting backfill shall not be operated closer to foundation or retaining walls than a distance

equal to the height of backfill above the top of footing; the area remaining shall be compacted in layers not more than 100 mm in compacted thickness with power-driven hand tampers suitable for the material being compacted. Backfill shall be placed carefully around pipes or tanks to avoid damage to coatings, wrappings, or tanks. Backfill shall not be placed against foundation walls prior to 7 days after completion of the walls. As far as practicable, backfill shall be brought up evenly on each side of the wall and sloped to drain away from the wall. Each layer of fill and backfill shall be compacted to not less than the minimum densities as indicated in Table 1 below when compared with the maximum dry density as determined by ASTM D-1557.

Table 1

Fill to Support	Minimum Compaction
Foundations	95%
Concrete Slabs	90%
Exterior Walls Backfill	88%
Landscaping	85%

Approved compacted subgrades that are disturbed by the Contractor's operations or adverse weather shall be scarified and compacted as specified herein before to the required density prior to further construction thereon. Recompaction over underground utilities and heating lines shall be by hand tamping.

3.14 TESTING

Testing shall be the responsibility of the Contractor and shall be performed at no additional cost to the Government. Testing shall be performed by an approved commercial testing laboratory or may be performed by the Contractor subject to approval. Field in-place density shall be determined in accordance with ASTM D 1556 or ASTM D 2922. When ASTM D 2922 is used, the calibration curves shall be checked and adjusted if necessary by the procedure described in ASTM D 2922, paragraph ADJUSTING CALIBRATION CURVE. ASTM D 2922 results in a wet unit weight of soil and when using this method ASTM D 3017 shall be used to determine the moisture content of the soil. The calibration curves furnished with the moisture gauges shall also be checked along with density calibration checks as described in ASTM D 3017. The calibration checks of both the density and moisture gauges shall be made at the beginning of a job on each different type of material encountered and at intervals as directed by the Contracting Officer. ASTM D 2937 shall be used only for soft, fine-grained, cohesive soils. The following number of tests, if performed at the appropriate time, shall be the minimum acceptable for each type operation.

3.14.1 In-Place Densities

In-place density and moisture content test results shall be included with the Contractor's daily construction quality control reports.

3.14.1.1 In-Place Density of Subgrades

One test per 209 square meters or fraction thereof.

3.14.1.2 In-Place Density of Fills and Backfills

One test per 167 square meters or fraction thereof of each lift for fill

or backfill areas compacted by other than hand or hand-operated machines. The density for each lift of fill or backfill materials for trenches, pits, building perimeters or other structures which are compacted with hand or hand-operated machines shall be tested as follows: One test per each area less than 166 square meters or one test for each 30 linear meters of long narrow fills but no less than one test. If ASTM D 2922 is used, in-place densities shall be checked by ASTM D 1556 as follows: One check per lift for each 30 linear meters of long narrow fills, and a minimum of 1 check per lift for other fill and backfill areas.

3.14.2 Moisture Content

In the stockpile, excavation or borrow areas, a minimum of two tests per day per type of material or source of materials being placed is required during stable weather conditions. During unstable weather, tests shall be made as dictated by local conditions and approved moisture content shall be tested in accordance with ASTM D 2216.

3.14.3 Optimum Moisture and Laboratory Maximum Density

Tests shall be made for each type material or source of material, including borrow material to determine the optimum moisture and laboratory maximum density values. One representative test per 150 cubic meters of fill and backfill, or when any change in material occurs which may affect the optimum moisture content or laboratory maximum density will be made.

3.15 CAPILLARY WATER BARRIER

Capillary water barrier under concrete floor and area-way slabs on grade shall be placed directly on the subgrade and shall be compacted with a minimum of two passes of a hand-operated plate-type vibratory compactor.

3.16 GRADING

Areas within 1.5 m outside of each building and structure line shall be constructed true-to-grade, shaped to drain, and shall be maintained free of trash and debris until final inspection has been completed and the work has been accepted.

3.17 SPREADING TOPSOIL

Areas outside the building lines from which topsoil has been removed shall be topsoiled. The surface shall be free of materials that would hinder planting or maintenance operations. The subgrade shall be pulverized to a depth of 50 mm by disking or plowing for the bonding of topsoil with the subsoil. Topsoil shall then be uniformly spread, graded, and compacted to the thickness, elevations, slopes shown, and left free of surface irregularities. Topsoil shall be compacted by one pass of a cultipacker, roller, or other approved equipment weighing 1.46kN/m to 2.34 kN/m of roller. Topsoil shall not be placed when the subgrade is frozen, excessively wet, extremely dry, or in a condition otherwise detrimental to seeding, planting, or proper grading.

3.18 PROTECTION

Settlement or washing that occurs in graded, topsoiled, or backfilled areas prior to acceptance of the work, shall be repaired and grades reestablished to the required elevations and slopes.

-- End of Section --

This page was intentionally left blank for duplex printing.

SECTION TABLE OF CONTENTS

DIVISION 02 - SITE WORK

SECTION 02316

EXCAVATION, TRENCHING, AND BACKFILLING FOR UTILITIES SYSTEMS

PART 1 GENERAL

1.1 REFERENCES
1.2 DEGREE OF COMPACTION
1.3 SUBMITTALS

PART 2 PRODUCTS

2.1 MATERIALS
2.1.1 Satisfactory Materials
2.1.2 Unsatisfactory Materials
2.1.3 Unstable Material
2.1.4 Select Granular Material
2.1.5 Initial Backfill Material
2.2 PLASTIC MARKING TAPE

PART 3 EXECUTION

3.1 EXCAVATION
3.1.1 Trench Excavation Requirements
3.1.1.1 Bottom Preparation
3.1.1.2 Removal of Unyielding Material
3.1.1.3 Removal of Unstable Material
3.1.1.4 Excavation for Appurtenances
3.1.1.5 Jacking, Boring, and Tunneling
3.1.2 Stockpiles
3.2 BACKFILLING AND COMPACTION
3.2.1 Trench Backfill
3.2.1.1 Replacement of Unyielding Material
3.2.1.2 Replacement of Unstable Material
3.2.1.3 Bedding and Initial Backfill
3.2.1.4 Final Backfill
3.2.2 Backfill for Appurtenances
3.3 SPECIAL REQUIREMENTS
3.3.1 Gas Distribution
3.3.2 Water Lines
3.3.3 Sanitary Sewer System
3.3.4 Electrical Distribution System
3.3.5 Plastic Marking Tape
3.4 TESTING
3.4.1 Testing Facilities
3.4.2 Testing of Backfill Materials
3.4.3 Field Density Tests
3.4.4 Displacement of Sewers

-- End of Section Table of Contents --

SECTION 02316

EXCAVATION, TRENCHING, AND BACKFILLING FOR UTILITIES SYSTEMS

PART 1 GENERAL

1.1 REFERENCES

The publications listed below form a part of this specification to the extent referenced. The publications are referred to in the text by basic designation only.

AMERICAN SOCIETY FOR TESTING AND MATERIALS (ASTM)

ASTM D 1556	(1990; R 1996) Density and Unit Weight of Soil in Place by the Sand-Cone Method
ASTM D 1557	(1991) Laboratory Compaction Characteristics of Soil Using Modified Effort (56,000 ft-lbf/cu. ft. (2,700 kN-m/cu. m.))
ASTM D 2922	(1996) Density of Soil and Soil-Aggregate in Place by Nuclear Methods (Shallow Depth)
ASTM D 3017	(1996) Water Content of Soil and Rock in Place by Nuclear Methods (Shallow Depth)

1.2 DEGREE OF COMPACTION

Degree of compaction shall be expressed as a percentage of the maximum density obtained by the test procedure presented in ASTM D 1557.

1.3 SUBMITTALS

Government approval is required for submittals with a "G" designation; submittals not having a "G" designation are for information only. When used, a designation following the "G" designation identifies the office that will review the submittal for the Government. The following shall be submitted in accordance with Section 01330 SUBMITTAL PROCEDURES:

SD-06 Test Reports

Field Density Tests; G-AO
Testing and Backfill Materials; G-AO

Copies of all laboratory and field tests reports must be provided to the Contracting Officer within 24 hours of the completion of the test.

PART 2 PRODUCTS

2.1 MATERIALS

2.1.1 Satisfactory Materials

Satisfactory materials include materials classified in ASTM D 2487 as GW, GP, or SW. GM, GC, SM, and SC, or combinations of these soils such as SW-SM, etc... may be used if located above the water table and containing less than 35% passing the 0.075 mm sieve and having a liquid limit (LL) of less than 30% and having a maximum particle size of 100 mm. All soil shall be free of trash, debris, roots or other organic matter, or stones larger than 75 mm in any dimension.

2.1.2 Unsatisfactory Materials

Materials which do not comply with the requirements for satisfactory materials are unsatisfactory. Unsatisfactory materials also include man-made fills, trash, refuse, backfills from previous construction, and material classified as satisfactory which contains roots or other organic matter or frozen material. The Contracting Officer shall be notified of any contaminated materials.

2.1.3 Unstable Material

Unstable material shall consist of materials too wet to properly support the utility pipe, conduit, or appurtenant structure.

Soil on the site near the surface has a high amount of clay with high moisture content. This soil can become difficult to work with if low ground pressure equipment is not used. Increased difficulties can be expected during periods of wet weather, particularly during the spring runoff. Subsurface water level fluctuations may occur over time due to seasonal and irrigation effects. Generally, the water level is highest in the spring and early summer, and lowest in the fall and winter months. If excavations extend down near the subsurface water level, care should be taken to dewater the excavations. All excavation and backfill work shall be accomplished during the dry season if possible.

2.1.4 Select Granular Material

Select granular material shall consist of well-graded sand, gravel, crushed gravel, crushed stone or crushed slag composed of hard, tough and durable particles, and shall contain not more than 10% by weight of material passing a 0.075 mm sieve and no less than 95% by weight passing the 25 mm sieve. The maximum allowable aggregate size shal be 75 mm or the maximum size recommended by the pipe manufacturer, whichever is smaller.

2.1.5 Initial Backfill Material

Initial backfill material shall consist of select granular material or satisfactory material free from rocks 75 mm or larger in any dimension or as recommended by the pipe manufacturer, whichever is smaller. When the pipe is coated or wrapped for corrosion protection, the initial backfill material shall be free of stones larger than 50 mm in any dimension or as recommended by the pipe manufacturer, whichever is smaller.

2.2 PLASTIC MARKING TAPE

Plastic marking tape shall be acid and alkali-resistant polyethylene film, wide with minimum thickness of Tape shall have a minimum strength of lengthwise and crosswise. The tape shall be manufactured with integral wires, foil backing or other means to enable detection by a metal detector

when the tape is buried. The tape shall be of a type specifically manufactured for marking and locating underground utilities. The metallic core of the tape shall be encased in a protective jacket or provided with other means to protect it from corrosion. Tape color shall be as specified in TABLE 1 and shall bear the continuous printed inscription: "CAUTION: BURIED INSTALLATION BELOW", or other inscription approved by the Contracting Officer describing the specific utility.

TABLE 1. Tape Color

Red:	Electric
Yellow:	Gas, Oil, Dangerous Materials
Orange:	Telephone, Telegraph, Television, Police, and Fire Communications
Blue:	Water Systems
Green:	Sewer Systems

PART 3 EXECUTION

3.1 EXCAVATION

Excavation shall be performed to the lines and grades indicated. During excavation, material satisfactory for backfilling shall be stockpiled in an orderly manner at a distance from the banks of the trench equal to 1/2 the depth of the excavation, but in no instance closer than 600 mm. Excavated material not required or not satisfactory for backfill shall be removed from the site. Grading shall be done as may be necessary to prevent surface water from flowing into the excavation, and any water accumulating shall be removed to maintain the stability of the bottom and sides of the excavation. Unauthorized overexcavation shall be backfilled in accordance with paragraph BACKFILLING AND COMPACTION at no additional cost to the Government.

3.1.1 Trench Excavation Requirements

The trench shall be excavated as recommended by the manufacturer of the pipe to be installed. Trench walls below the top of the pipe shall be sloped, or made vertical, and of such width as recommended in the manufacturer's installation manual. Where no manufacturer's installation manual is available, trench walls shall be made vertical. Trench walls more than 2 meters high shall be shored, cut back to a stable slope, or provided with equivalent means of protection for employees who may be exposed to moving ground or cave in. Trench walls which are cut back shall be excavated to at least the angle of repose of the soil. Special attention shall be given to slopes which may be adversely affected by weather or moisture content. The trench width below the top of pipe shall not exceed plus pipe outside diameter (O.D.) for pipes of less than inside diameter and shall not exceed plus pipe outside diameter for sizes larger than inside diameter. Where recommended trench widths are exceeded, redesign, stronger pipe, or special installation procedures shall be utilized by the Contractor. The cost of redesign, stronger pipe, or special installation procedures shall be borne by the Contractor without any additional cost to the Government.

3.1.1.1 Bottom Preparation

The bottoms of trenches shall be accurately graded to provide uniform bearing and support for the bottom quadrant of each section of the pipe. Bell holes shall be excavated to the necessary size at each joint or

coupling to eliminate point bearing. Stones of 75 mm or greater in any dimension, or as recommended by the pipe manufacturer, whichever is smaller, shall be removed to avoid point bearing.

3.1.1.2 Removal of Unyielding Material

Where unyielding material is encountered in the bottom of the trench, such material shall be removed 100 below the required grade and replaced with suitable materials as provided in paragraph BACKFILLING AND COMPACTION.

3.1.1.3 Removal of Unstable Material

Where unstable material is encountered in the bottom of the trench, such material shall be removed to the depth directed and replaced to the proper grade with select granular material as provided in paragraph BACKFILLING AND COMPACTION. When removal of unstable material is required due to the Contractor's fault or neglect in performing the work, the resulting material shall be excavated and replaced by the Contractor without additional cost to the Government.

3.1.1.4 Excavation for Appurtenances

Excavation for manholes, catch-basins, inlets, or similar structures shall be sufficient to leave at least 300 mm clear between the outer structure surfaces and the face of the excavation or support members. Removal of unstable material shall be as specified above. When concrete or masonry is to be placed in an excavated area, special care shall be taken not to disturb the bottom of the excavation. Excavation to the final grade level shall not be made until just before the concrete or masonry is to be placed.

3.1.1.5 Jacking, Boring, and Tunneling

Unless otherwise indicated, excavation shall be by open cut except that sections of a trench may be jacked, bored, or tunneled if, in the opinion of the Contracting Officer, the pipe, cable, or duct can be safely and properly installed and backfill can be properly compacted in such sections.

3.1.2 Stockpiles

Stockpiles of satisfactory shall be placed and graded as specified. Stockpiles shall be kept in a neat and well drained condition, giving due consideration to drainage at all times. The ground surface at stockpile locations shall be cleared, grubbed, and sealed by rubber-tired equipment, excavated satisfactory and unsatisfactory materials shall be separately stockpiled. Stockpiles of satisfactory materials shall be protected from contamination which may destroy the quality and fitness of the stockpiled material. If the Contractor fails to protect the stockpiles, and any material becomes unsatisfactory, such material shall be removed and replaced with satisfactory material from approved sources at no additional cost to the Government. Locations of stockpiles of satisfactory materials shall be subject to prior approval of the Contracting Officer.

3.2 BACKFILLING AND COMPACTION

Backfill material shall consist of satisfactory material, select granular material, or initial backfill material as required. Backfill shall be placed in layers not exceeding 150 mm loose thickness for compaction by hand operated machine compactors, and 200 mm loose thickness for other than hand operated machines, unless otherwise specified. Each layer shall

be compacted to at least 95 percent maximum density, unless otherwise specified.

3.2.1 Trench Backfill

Trenches shall be backfilled to the grade shown. The trench shall be backfilled to 0.6 meters above the top of pipe prior to performing the required pressure tests. The joints and couplings shall be left uncovered during the pressure test. The trench shall not be backfilled until all specified tests are performed.

3.2.1.1 Replacement of Unyielding Material

Unyielding material removed from the bottom of the trench shall be replaced with select granular material or initial backfill material.

3.2.1.2 Replacement of Unstable Material

Unstable material removed from the bottom of the trench or excavation shall be replaced with select granular material placed in layers not exceeding loose thickness.

3.2.1.3 Bedding and Initial Backfill

Bedding shall be of the type and thickness shown. Initial backfill material shall be placed and compacted with approved tampers to a height of at least 300 mm above the utility pipe or conduit. The backfill shall be brought up evenly on both sides of the pipe for the full length of the pipe. Care shall be taken to ensure thorough compaction of the fill under the haunches of the pipe.

3.2.1.4 Final Backfill

The remainder of the trench, except for special materials for roadways and parking lots shall be filled with satisfactory material. Backfill material shall be placed and compacted as follows:

a. Roadwaysand parking lots: Backfill shall be placed up to the elevation at which the requirements in Section 02300 EARTHWORK control. Water flooding or jetting methods of compaction will not be permitted.

b. Sidewalks, Turfed or Seeded Areas and Miscellaneous Areas: Backfill shall be deposited in layers of a maximum of loose thickness, and compacted to 95 percent maximum density. Compaction by water flooding or jetting will not be permitted. This requirement shall also apply to all other areas not specifically designated above.

3.2.2 Backfill for Appurtenances

After the manhole, catchbasin, inlet, or similar structure has been constructed and the concrete has been allowed to cure for a minimum of 3 days, backfill shall be placed in such a manner that the structure will not be damaged by the shock of falling earth. The backfill material shall be deposited and compacted as specified for final backfill, and shall be brought up evenly on all sides of the structure to prevent eccentric loading and excessive stress.

3.3 SPECIAL REQUIREMENTS

Special requirements for both excavation and backfill relating to the specific utilities are as follows:

3.3.1 Gas Distribution

Trenches shall be excavated to a depth that will provide not less than of cover. Trenches shall be graded as specified for pipe-laying requirements in Section 02256 GAS DISTRIBUTION SYSTEM.

3.3.2 Water Lines

Trenches shall be of a depth to provide a minimum cover of 2.5 meters from the existing ground surface, or from the indicated finished grade, whichever is lower, to the top of the pipe. The maximum depth from the existing ground surface (or from the indicated finished grade, whichever is lower) shall be 3.0 meters. If, due to site construction there is less than the designated minimum cover, the Contractor shall provide additional protection to withstand fronts and external loads.

3.3.3 Sanitary Sewer System

Trenches shall be of a depth to provide a minimum cover of 1.0 meters for laterals and 1.2 meters where subjected to light construction equipment loads.

3.3.4 Electrical Distribution System

Direct burial cable and conduit or duct line shall have a minimum cover of 600 mm from the finished grade, unless otherwise indicated. Special trenching requirements for direct-burial electrical cables and conduits are specified in Section 16375 ELECTRICAL DISTRIBUTION SYSTEM, UNDERGROUND.

3.3.5 Plastic Marking Tape

Warning tapes shall be installed directly above the pipe, at a depth of 450 mm below finished grade unless otherwise shown. The tape shall not be less than 150 mm wide and not less than 0.102 mm thick and shall read; "CAUTION: BURIED INSTALLATION BELOW" in the color identified in Table 1.

3.4 TESTING

Testing shall be the responsibility of the Contractor and shall be performed at no additional cost to the Government. All testing sampling shall be performed according to the Construction Control Manual except when specified otherwise.

3.4.1 Testing Facilities

Tests shall be performed by an approved commercial testing laboratory or may be tested by facilities furnished by the Contractor. No work requiring testing will be permitted until the facilities have been inspected and approved by the Contracting Officer. The first inspection shall be at the expense of the Government. Cost incurred for any subsequent inspection required because of failure of the first inspection will be charged to the Contractor.

3.4.2 Testing of Backfill Materials

Classification of backfill materials shall be determined in accordance with particle size analysis of soils ASTM D 422 and the moisture-density relations of soils shall be determined in accordance with ASTM D 1557. A minimum of one particle size analysis and one moisture-density relation test shall be performed on each different type of material used for bedding and backfill.

Table 2. Lot Size for Trench Backfill Operations

Subgrade:	One test per day.
Common Fill:	One test per lift per 60 m of trench
Select Fill:	One test per lift per 60 m of trench One test per 2.3 sq. meters of footing
Flowable Fill:	One test per 38 cubic meters of fill

3.4.3 Field Density Tests

Tests shall be performed in sufficient numbers to ensure that the specified density is being obtained. A minimum of one field density test per lift of backfill for every 60 meters of installation shall be performed. One moisture density relationship shall be determined for every 1500 cubic meters of material used. Field in-place density shall be determined in accordance with ASTM D 1556ASTM D 2922. When ASTM D 2922 is used, the calibration curves shall be checked and adjusted using the sand cone method as described in paragraph Calibration of the ASTM publication. ASTM D 2922 results in a wet unit weight of soil and when using this method, ASTM D 3017 shall be used to determine the moisture content of the soil. The calibration curves furnished with the moisture gauges shall be checked along with density calibration checks as described in ASTM D 3017. The calibration checks of both the density and moisture gauges shall be made at the beginning of a job, on each different type of material encountered, at intervals as directed by the Contracting Officer. Copies of calibration curves, results of calibration tests, and field and laboratory density tests shall be furnished to the Contracting Officer. Trenches improperly compacted shall be reopened to the depth directed, then refilled and compacted to the density specified at no additional cost to the Government.

3.4.4 Displacement of Sewers

After other required tests have been performed and the trench backfill compacted to 2 meters above the top of the pipe, the pipe shall be inspected to determine whether significant displacement has occurred. This inspection shall be conducted in the presence of the Contracting Officer. Pipe shall be inspected by shining a light or laser between manholes or manhole locations, or by the use of television cameras passed through the pipe. If, in the judgement of the Contracting Officer, the interior of the pipe shows poor alignment or any other defects that would cause improper functioning of the system, the defects shall be remedied as directed at no additional cost to the Government.

-- End of Section --

SECTION TABLE OF CONTENTS

DIVISION 02 - SITE WORK

SECTION 02531

SANITARY SEWERS

PART 1 GENERAL

1.1 REFERENCES
1.2 GENERAL REQUIREMENTS
1.3 SUBMITTALS

PART 2 PRODUCTS

2.1 PIPE
2.1.1 Plastic Pipe
2.1.1.1 PVC Pipe
2.2 REQUIREMENTS FOR FITTINGS
2.2.1 Fittings for Plastic Pipe
2.2.1.1 Fittings for PVC Pipe
2.3 JOINTS
2.3.1 Plastic Pipe Jointing
2.4 BRANCH CONNECTIONS
2.5 FRAMES AND COVERS
2.6 STEEL LADDER
2.7 CEMENT MORTAR
2.7.1 Portland Cement
2.7.2 Portland Cement Concrete
2.8 STRUCTURES
2.8.1 Precast Reinforced Concrete Manhole Sections

PART 3 EXECUTION

3.1 INSTALLATION
3.1.1 Adjacent Facilities
3.1.1.1 Water Lines
3.1.1.2 Structural Foundations
3.1.2 Pipe Laying
3.1.2.1 Trenches
3.1.2.2 Backfill
3.1.2.3 Width of Trench
3.1.2.4 Jointing
3.1.2.5 Handling and Storage
3.1.3 Leakage Tests
3.1.4 Test for Deflection
3.2 CONCRETE CRADLE AND ENCASEMENT
3.3 INSTALLATION OF WYE BRANCHES
3.4 MANHOLE DETAILS
3.4.1 General Requirements
3.4.2 Steel Ladder Anchorage
3.4.3 Jointing, Plastering and Sealing
3.4.4 Setting of Frames and Covers
3.4.5 External Preformed Rubber Joint Seals
3.5 CONNECTING TO EXISTING STUB/RISER

3.6 BUILDING CONNECTIONS
3.7 CLEANOUTS AND OTHER APPURTENANCES

-- End of Section Table of Contents --

SECTION 02531

SANITARY SEWERS

PART 1 GENERAL

1.1 REFERENCES

The publications listed below form a part of this specification to the extent referenced. The publications are referred to in the text by basic designation only.

AMERICAN SOCIETY FOR TESTING AND MATERIALS (ASTM)

ASTM A 123	(1989a) Zinc (Hot-Dip Galvanized) Coatings on Iron and Steel Products
ASTM C 33	(1993) Concrete Aggregates
ASTM C 94	(1996) Ready-Mixed Concrete
ASTM C 150	(1997) Portland Cement
ASTM C 260	(1995) Air-Entraining Admixtures for Concrete
ASTM C 270	(1997) Mortar for Unit Masonry
ASTM C 478	(1996) Precast Reinforced Concrete Manhole Sections
ASTM C 478M	(1996) Precast Reinforced Concrete Manhole Sections (Metric)
ASTM C 828	(1991, R 1996) Low-Pressure Air Test of Vitrified Clay Pipe Lines
ASTM C 924	(1989) Concrete Pipe Sewer Lines by Low-Pressure Air Test Method
ASTM C 972	(1995) Compression-Recovery of Tape Sealant
ASTM D 412	(1992) Vulcanized Rubber and Thermoplastic Rubbers and Thermoplastic Elastomers - Tension
ASTM D 624	(1991; R 1996) Tear Strength of Conventional Vulcanized Rubber and Thermoplastic Elastomers
ASTM D 1784	(1996) Rigid Poly(Vinyl Chloride) (PVC) Compounds and Chlorinated Poly(Vinyl

	Chloride) (CPVC) Compounds
ASTM D 2680	(1995a)Acrylonitrile-Butadiene-Styrene (ABS) and Poly(Vinyl Chloride) (PVC) Composite Sewer Piping
ASTM D 3034	(1994) Type PSM Poly(Vinyl Chloride) (PVC) Sewer Pipe and Fittings
ASTM D 3212	(1996a) Joints for Drain and Sewer Plastic Pipes Using Flexible Elastomeric Seals

NATIONAL FIRE PROTECTION ASSOCIATION (NFPA)

NFPA 49	(1994) Hazardous Chemicals Data
NFPA 325-1	(1994) Fire Hazard Properties of Flammable Liquids, Gases, and Volatile Solids
NFPA 704	(1996) Identification of the Fire Hazards of Materials for Emergency Response

UNI-BELL PVC PIPE ASSOCIATION (UBPPA)

UBPPA UNI-B-6	(1990) Recommended Practice for the Low-Pressure Air Testing of Installed Sewer Pipe

1.2 GENERAL REQUIREMENTS

The construction required herein shall include appurtenant structures and building sewers to points of connection with the building drains outside the building to which the sewer system is to be connected. The Contractor shall replace damaged material and redo unacceptable work at no additional cost to the Government. Excavation and backfilling is specified in Section 02316 EXCAVATION, TRENCHING, AND BACKFILLING FOR UTILITIES SYSTEMS. Backfilling shall be accomplished after inspection by the Contracting Officer. Before, during, and after installation, plastic pipe and fittings shall be protected from any environment that would result in damage or deterioration to the material. The Contractor shall have a copy of the manufacturer's instructions available at the construction site at all times and shall follow these instructions unless directed otherwise by the Contracting Officer. Solvents, solvent compounds, lubricants, elastomeric gaskets, and any similar materials required to install the plastic pipe shall be stored in accordance with the manufacturer's recommendation and shall be discarded if the storage period exceeds the recommended shelf life. Solvents in use shall be discarded when the recommended pot life is exceeded.

1.3 SUBMITTALS

Government approval is required for submittals with a "G" designation; submittals not having a "G" designation are for information only or as otherwise designated. When used, a designation following the "G" designation identifies the office that will review the submittal for the Government. The following shall be submitted in accordance with Section 01330 SUBMITTAL PROCEDURES:

SD-07 Certificates

Portland Cement; G-AO

Certificates of compliance stating the type of cement used in manufacture of concrete fittings and precast manholes.

Joints; G-AO

Certificates of compliance stating that the fittings or gaskets used for waste drains or lines designated on the plans as oil resistant.

PART 2 PRODUCTS

2.1 PIPE

Pipe shall conform to the respective specifications and other requirements specified below.

2.1.1 Plastic Pipe

Polyvinyl chloride (PVC) composite sewer piping shall conform to ASTM D 2680. Size through diameter.

2.1.1.1 PVC Pipe

ASTM D 3034, Type PSM with a maximum SDR of 35, Size or less in diameter. PVC shall be certified by the compounder as meeting the requirements of ASTM D 1784, cell Class 12454B. The pipe stiffness shall be greater than or equal to 735/D for cohesionless material pipe trench backfills.

2.2 REQUIREMENTS FOR FITTINGS

Fittings shall be compatible with the pipe supplied and shall have a strength not less than that of the pipe. Fittings shall conform to the respective specifications and other requirements specified below.

2.2.1 Fittings for Plastic Pipe

PVC composite sewer pipe fittings shall conform to ASTM D 2680.

2.2.1.1 Fittings for PVC Pipe

ASTM D 3034 for type PSM pipe.

2.3 JOINTS

Joints installation shall comply with the manufacturer's instructions. Fittings and gaskets utilized for waste drains or industrial waste lines shall be certified by the manufacturer as oil resistant.

2.3.1 Plastic Pipe Jointing

Flexible plastic pipe (PVC pipe) gasketed joints shall conform to ASTM D 3212.

2.4 BRANCH CONNECTIONS

Branch connections shall be made by use of regular fittings or solvent cemented saddles as approved. Saddles for PVC pipe shall conform to Table 4 of ASTM D 3034.

2.5 FRAMES AND COVERS

Frames and covers shall be cast iron, ductile iron or reinforced concrete. Cast iron frames and covers shall be as indicated or shall be of type suitable for the application, circular, without vent holes. The frames and covers shall have a combined weight of not less than . Reinforced concrete frames and covers shall be as indicated or shall conform to ASTM C 478 or ASTM C 478M. The word "Sewer" shall be stamped or cast into covers so that it is plainly visible.

2.6 STEEL LADDER

A steel ladder shall be provided where the depth of a manhole exceeds The ladder shall not be less than in width, with diameter rungs spaced apart. The two stringers shall be a minimum thick and wide. Ladders and inserts shall be galvanized after fabrication in conformance with ASTM A 123.

2.7 CEMENT MORTAR

Cement mortar shall conform to ASTM C 270, Type M with Type II cement.

2.7.1 Portland Cement

Portland cement shall conform to ASTM C 150, Type V (sulfate resistant) for concrete used in manholes and type optional with the Contractor for cement used in concrete cradle, concrete encasement, and thrust blocking. Air-entraining admixture conforming to ASTM C 260 shall be used with Type V cement. Where aggregates are alkali reactive, as determined by Appendix XI of ASTM C 33, a cement containing less than 0.60 percent alkalies shall be used.

2.7.2 Portland Cement Concrete

Portland cement concrete shall conform to ASTM C 94, compressive strength of 28 MPa at 28 days, except for concrete cradle and encasement or concrete blocks for manholes. Concrete used for cradle and encasement shall have a compressive strength of 17 MPa minimum at 28 days. Concrete in place shall be protected from freezing and moisture loss for 7 days.

2.8 STRUCTURES

2.8.1 Precast Reinforced Concrete Manhole Sections

Precast reinforced concrete manhole sections shall conform to ASTM C 478, except that portland cement shall be as specified herein. Joints shall be cement mortar, an approved mastic, rubber gaskets, a combination of these types; or the use of external preformed rubber joint seals and extruded rolls of rubber with mastic adhesive on one side.

PART 3 EXECUTION

3.1 INSTALLATION

3.1.1 Adjacent Facilities

3.1.1.1 Water Lines

Where the location of the sewer is not clearly defined by dimensions on the drawings, the sewer shall not be closer horizontally than 3 m to a water-supply main or service line, except that where the bottom of the water pipe will be at least 300 mm above the top of the sewer pipe, the horizontal spacing may be a minimum of 2 m. Where gravity-flow sewers cross above water lines, the sewer pipe for a distance of 3 m on each side of the crossing shall be fully encased in concrete or shall be acceptable pressure pipe with no joint closer horizontally than 1 m to the crossing. The thickness of the concrete encasement including that at the pipe joints shall be not less than 100 mm.

3.1.1.2 Structural Foundations

Where sewer pipe is to be installed within 1 m of an existing or proposed building or structural foundation such as a retaining wall, control tower footing, water tank footing, or any similar structure, the sewer pipe shall be sleeved as specified above. Contractor shall ensure there is no damage to these structures, and no settlement or movement of foundations or footing.

3.1.2 Pipe Laying

a. Pipe shall be protected during handling against impact shocks and free fall; the pipe interior shall be free of extraneous material.

b. Pipe laying shall proceed upgrade with the spigot ends of bell-and-spigot pipe and tongue ends of tongue-and-groove pipe pointing in the direction of the flow. Each pipe shall be laid accurately to the line and grade shown on the drawings. Pipe shall be laid and centered so that the sewer has a uniform invert. As the work progresses, the interior of the sewer shall be cleared of all superfluous materials.

c. Before making pipe joints, all surfaces of the portions of the pipe to be joined shall be clean and dry. Lubricants, primers, and adhesives shall be used as recommended by the pipe manufacturer. The joints shall then be placed, fitted, joined, and adjusted to obtain the degree of water tightness required.

3.1.2.1 Trenches

Trenches shall be kept free of water and as dry as possible during bedding, laying, and jointing and for as long a period as required. When work is not in progress, open ends of pipe and fittings shall be satisfactorily closed so that no trench water or other material will enter the pipe or fittings.

3.1.2.2 Backfill

As soon as possible after the joint is made, sufficient backfill material shall be placed along the pipe to prevent pipe movement off line or grade. Plastic pipe shall be completely covered to prevent damage from ultraviolet light.

3.1.2.3 Width of Trench

If the maximum width of the trench at the top of the pipe, as specified in Section 02316 EXCAVATION, TRENCHING, AND BACKFILLING FOR UTILITIES SYSTEMS, is exceeded for any reason other than by direction, the Contractor shall install, at no additional cost to the Government, concrete cradling, pipe encasement, or other bedding required to support the added load of the backfill.

3.1.2.4 Jointing

Joints between different pipe materials shall be made as specified, using approved jointing materials.

3.1.2.5 Handling and Storage

Pipe, fittings and joint material shall be handled and stored in accordance with the manufacturer's recommendations. Storage facilities for plastic pipe, fittings, joint materials and solvents shall be classified and marked in accordance with NFPA 704, with classification as indicated in NFPA 49 and NFPA 325-1.

3.1.3 Leakage Tests

Lines shall be tested for leakage by low pressure air testing, infiltration tests or exfiltration tests, as appropriate. Low pressure air testing for vitrified clay pipes shall be as prescribed in ASTM C 828. Low pressure air testing for concrete pipes shall be as prescribed in ASTM C 828. Low pressure air testing for PVC pipe shall be as prescribed in UBPPA UNI-B-6. Low pressure air testing procedures for other pipe materials shall use the pressures and testing times prescribed in ASTM C 828 and ASTM C 924, after consultation with the pipe manufacturer. Prior to infiltration or exfiltration tests, the trench shall be backfilled up to at least the lower half of the pipe. If required, sufficient additional backfill shall be placed to prevent pipe movement during testing, leaving the joints uncovered to permit inspection. Visible leaks encountered shall be corrected regardless of leakage test results. When the water table is 600 mm or more above the top of the pipe at the upper end of the pipeline section to be tested, infiltration shall be measured using a suitable weir or other device acceptable to the Contracting Officer. When the Contracting Officer determines that infiltration cannot be properly tested, an exfiltration test shall be made by filling the line to be tested with water so that a head of at least 600 mm is provided above both the water table and the top of the pipe at the upper end of the pipeline to be tested. The filled line shall be allowed to stand until the pipe has reached its maximum absorption, but not less than 4 hours. After absorption, the head shall be re-established. The amount of water required to maintain this water level during a 2-hour test period shall be measured. Leakage as measured by either the infiltration test or exfiltration test shall not exceed 50 mL per 5 mm diameter per 100 m of pipeline per hour. When leakage exceeds the maximum amount specified, satisfactory correction shall be made and retesting accomplished. Testing, correction, and retesting shall be made at no additional cost to the Government.

3.1.4 Test for Deflection

When flexible pipe is used, a deflection test shall be made on the entire length of the installed pipeline not less than 30 days after the completion of all work including the leakage test, backfill, and placement of any

fill, grading, paving, concrete, or superimposed loads. Deflection shall be determined by use of a deflection device or by use of a spherical, spheroidal, or elliptical ball, a cylinder, or circular sections fused to a common shaft. The ball, cylinder, or circular sections shall have a diameter, or minor diameter as applicable, of 92.5 percent of the inside diameter of the pipe. A tolerance of plus 0.5 percent will be permitted. The ball, cylinder, or circular sections shall be of a homogeneous material throughout, shall have a density greater than 1.0 as related to water at and shall have a surface brinell hardness of not less than 150. The device shall be center bored and through bolted with a 6 mm minimum diameter steel shaft having a yield strength of 480 MPa or more, with eyes at each end for attaching pulling cables. The eye shall be suitably backed with flange or heavy washer; a pull exerted on the opposite end of the shaft shall produce compression throughout the remote end of the ball, cylinder or circular section. Circular sections shall be spaced so that the distance from the external faces of the front and back sections shall equal or exceed the diameter of the circular section. Failure of the ball, cylinder, or circular section to pass freely through a pipe run, either by being pulled through or by being flushed through with water, shall be cause for rejection of that run. When a deflection device is used for the test in lieu of the ball, cylinder, or circular sections described, such device shall be approved prior to use. The device shall be sensitive to 1.0 percent of the diameter of the pipe being measured and shall be accurate to 1.0 percent of the indicated dimension. Installed pipe showing deflections greater than 7.5 percent of the normal diameter of the pipe. shall be retested by a run from the opposite direction. If the retest also fails, the suspect pipe shall be replaced at no cost to the Government.

3.2 CONCRETE CRADLE AND ENCASEMENT

The pipe shall be supported on a concrete cradle, or encased in concrete where indicated or directed.

3.3 INSTALLATION OF WYE BRANCHES

Wye branches shall be installed where sewer connections are indicated or where directed. Cutting into piping for connections shall not be done except in special approved cases. When the connecting pipe cannot be adequately supported on undisturbed earth or tamped backfill, the pipe shall be encased in concrete backfill or supported on a concrete cradle as directed. Concrete required because of conditions resulting from faulty construction methods or negligence by the Contractor shall be installed at no additional cost to the Government. The installation of wye branches in an existing sewer shall be made by a method which does not damage the integrity of the existing sewer. One acceptable method consists of removing one pipe section, breaking off the upper half of the bell of the next lower section and half of the running bell of wye section. After placing the new section, it shall be rotated so that the broken half of the bell will be at the bottom. The two joints shall then be made with joint packing and cement mortar.

3.4 MANHOLE DETAILS

3.4.1 General Requirements

Manholes shall be constructed of concrete, or precast concrete manhole sections. The invert channels shall be smooth and semicircular in shape conforming to the inside of the adjacent sewer section. Changes in direction of flow shall be made with a smooth curve of as large a radius as

the size of the manhole will permit. Changes in size and grade of the channels shall be made gradually and evenly. The invert channels shall be formed directly in the concrete of the manhole base, or shall be built up with brick and mortar, or shall be half tile laid in concrete, or shall be constructed by laying full section sewer pipe through the manhole and breaking out the top half after the surrounding concrete has hardened. Pipe connections shall be made to manhole using water stops, standard O-ring joints, special manhole coupling, or shall be made in accordance with the manufacturer's recommendation. The Contractor's proposed method of connection, list of materials selected, and specials required, shall be approved prior to installation. The floor of the manhole outside the channels shall be smooth and shall slope toward the channels not less than 100 mm per meter nor more than Free drop inside the manholes shall not exceed 500 mm, measured from the invert of the inlet pipe to the top of the floor of the manhole outside the channels; drop manholes shall be constructed whenever the free drop would otherwise be greater than 500 mm.

3.4.2 Steel Ladder Anchorage

Ladder shall be adequately anchored to the wall by means of steel inserts spaced not more than 1850 mm apart vertically, and shall be installed to provide at least 150 mm of space between the wall and the rungs. The wall along the line of the ladder shall be vertical for its entire length.

3.4.3 Jointing, Plastering and Sealing

Mortar joints shall be completely filled and shall be smooth and free from surplus mortar on the inside of the manhole. Mortar and mastic joints between precast rings shall be full-bedded in jointing compound and shall be smoothed to a uniform surface on both the interior and exterior of the manhole. Installation of rubber gasket joints between precast rings shall be in accordance with the recommendations of the manufacturer. Precast rings may also be sealed by the use of extruded rolls of rubber with mastic adhesive on one side.

3.4.4 Setting of Frames and Covers

Unless otherwise indicated, tops of frames and covers shall be set flush with finished grade in paved areas or 50 mm higher than finished grade in unpaved areas. Frame and cover assemblies shall be sealed to manhole sections using external preformed rubber joint seals that meet the requirements of ASTM D 412 and ASTM D 624, or other methods specified in paragraph Jointing, Plastering and Sealing, unless otherwise specified.

3.4.5 External Preformed Rubber Joint Seals

External preformed rubber joint seals and extruded rolls of rubber with mastic adhesive shall meet the requirements of ASTM D 412 and ASTM C 972 to ensure conformance with paragraph Leakage Tests. The seal shall be multi-section with neoprene rubber top section and all lower sections made of Ethylene Propylene Di Monomer (EPDM) rubber with a minimum thickness of Each unit shall consist of a top and a bottom section and shall have mastic on the bottom of the bottom section and mastic on the top and bottom of the top section. The mastic shall be non-hardening butyl rubber sealant and shall seal to the cone/top slab of the manhole/catch basin and over the lip of the casting. One unit shall seal a casting and up to six, 50 mm adjusting rings. The bottom section shall be 305 mm in height. A 152 mm high top section will cover up to two, 50 mm adjusting rings. A 305 mm high bottom section will cover up to six, 50 mm adjusting rings.

Extension sections shall cover up to two more adjusting rings. Each extension shall overlap the bottom section by 50 mm and shall be overlapped by the top section by

3.5 CONNECTING TO EXISTING STUB/RISER

Pipe connections to existing sanitary stubs/risers shall be made so that finish work will conform as nearly as practicable to the applicable requirements specified for new sewers. The connection to the existing stub/riser shall be made in conformance with the applicable provisions for jointing specified herein.

3.6 BUILDING CONNECTIONS

Building connections shall include the lines to and connection with the building waste drainage piping at a point approximately 1.5 m outside the building, unless otherwise indicated. Where building drain piping is not installed, the Contractor shall terminate the building connections approximately 1.5 m from the site of the building at a point and in a manner designated.

3.7 CLEANOUTS AND OTHER APPURTENANCES

Cleanouts and other appurtenances shall be installed where shown on the drawings or as directed by the Contracting Officer, and shall conform to the detail of the drawings.

-- End of Section --

This page was intentionally left blank for duplex printing.

SECTION TABLE OF CONTENTS

DIVISION 02 - SITE WORK

SECTION 02722

AGGREGATE AND/OR GRADED-CRUSHED AGGREGATE BASE COURSE

PART 1 GENERAL

1.1 REFERENCES
1.2 DEFINITIONS
1.2.1 Graded-crushed Aggregate Base Course
1.2.2 Degree of Compaction
1.3 SUBMITTALS
1.4 SAMPLING AND TESTING
1.4.1 Sampling
1.4.2 Tests
1.4.2.1 Sieve Analysis
1.4.2.2 Liquid Limit and Plasticity Index
1.4.2.3 Moisture-Density Determinations
1.4.2.4 Field Density Tests
1.4.2.5 Wear Test
1.4.2.6 Soundness
1.4.3 Testing Frequency
1.4.3.1 Initial Tests
1.4.3.2 In Place Tests
1.4.4 Approval of Material
1.5 WEATHER LIMITATIONS
1.6 PLANT, EQUIPMENT, AND TOOLS

PART 2 PRODUCTS

2.1 AGGREGATES
2.1.1 Coarse Aggregate
2.1.1.1 Graded-Crushed Aggregate Base Course
2.1.2 Fine Aggregate
2.1.2.1 Graded-Crushed Aggregate Base Course
2.1.3 Gradation Requirements
2.1.4 Liquid Limit and Plasticity Index

PART 3 EXECUTION

3.1 GENERAL REQUIREMENTS
3.2 OPERATION OF AGGREGATE SOURCES
3.3 STOCKPILING MATERIAL
3.4 PREPARATION OF UNDERLYING COURSE
3.5 INSTALLATION
3.5.1 Mixing the Materials
3.5.2 Placing
3.5.3 Grade Control
3.5.4 Edges of Base Course
3.5.5 Compaction
3.5.6 Thickness
3.5.7 Proof Rolling
3.5.8 Finishing

3.5.9 Smoothness
3.6 TRAFFIC
3.7 MAINTENANCE
3.8 DISPOSAL OF UNSATISFACTORY MATERIALS

-- End of Section Table of Contents --

SECTION 02722

AGGREGATE AND/OR GRADED-CRUSHED AGGREGATE BASE COURSE

PART 1 GENERAL

1.1 REFERENCES

The publications listed below form a part of this specification to the extent referenced. The publications are referred to in the text by basic designation only.

AMERICAN SOCIETY FOR TESTING AND MATERIALS (ASTM)

ASTM C 29/C 29M	(1997) Bulk Density ("Unit Weight") and Voids in Aggregate
ASTM C 88	(1990) Soundness of Aggregates by Use of Sodium Sulfate or Magnesium Sulfate
ASTM C 117	(1995) Materials Finer Than 75 micrometer (No. 200) Sieve in Mineral Aggregates by Washing
ASTM C 127	(1988; R 1993) Specific Gravity and Absorption of Course Aggregate
ASTM C 128	(1993) Specific Gravity and Absorption of Fine Aggregate
ASTM C 131	(1996) Resistance to Degradation of Small-Size Coarse Aggregate by Abrasion and Impact in the Los Angeles Machine
ASTM D 75	(1987; R 1992) Sampling Aggregates
ASTM D 422	(1963; R 1990) Particle-Size Analysis of Soils
ASTM D 2487	(1993) Classification of Soils for Engineering Purposes (Unified Soil Classification System)
ASTM D 2922	(1996) Density of Soil and Soil-Aggregate in Place by Nuclear Methods (Shallow Depth)
ASTM D 3017	(1996) Water Content of Soil and Rock in Place by Nuclear Methods (Shallow Depth)
ASTM D 4318	(1995a) Liquid Limit, Plastic Limit, and Plasticity Index of Soils

1.2 DEFINITIONS

For the purposes of this specification, the following definitions apply.

1.2.1 Graded-crushed Aggregate Base Course

Graded-crushed aggregate (GCA) base course is well graded, crushed, durable aggregate uniformly moistened and mechanically stabilized by compaction as described in MnDOT 2211 and MnDOT 3138. GCA is similar to ABC (aggregate base course), but it has more stringent requirements and it produces a base course with higher strength and stability.

1.2.2 Degree of Compaction

Degree of compaction shall be expressed as a percentage of the maximum density obtained by the test procedure presented in ASTM D 1557.

1.3 SUBMITTALS

Government approval is required for submittals with a "G" designation; submittals not having a "G" designation are for information only. When used, a designation following the "G" designation identifies the office that will review the submittal for the Government. The following shall be submitted in accordance with Section 01330 SUBMITTAL PROCEDURES:

SD-03 Product Data

Plant, Equipment, and Tools;

List of proposed equipment to be used in performance of construction work, including descriptive data.

SD-06 Test Reports

Sampling and testing; G-AO.
Field Density Tests; G-AO.

Calibration curves and related test results prior to using the device or equipment being calibrated. Copies of field test results within 24 hours after the tests are performed. Certified copies of test results for approval not less than 30 days before material is required for the work.

1.4 SAMPLING AND TESTING

Sampling and testing shall be the responsibility of the Contractor in accordance with MnDOT 2211 Sampling and testing shall be performed by a testing laboratory approved in accordance with Section 01451 CONTRACTOR QUALITY CONTROL. Work requiring testing will not be permitted until the testing laboratory has been inspected and approved. The materials shall be tested to establish compliance with the specified requirements; testing shall be performed at the specified frequency. The Contracting Officer may specify the time and location of the tests. Copies of test results shall be furnished to the Contracting Officer within 24 hours of completion of the tests.

1.4.1 Sampling

Samples for laboratory testing shall be taken in conformance with ASTM D 75. When deemed necessary, the sampling will be observed by the Contracting Officer.

1.4.2 Tests

The following tests shall be performed in conformance with the applicable standards listed.

1.4.2.1 Sieve Analysis

Sieve analysis shall be made in conformance with ASTM C 117 and ASTM D 422. Sieves shall conform to ASTM E 11 and MnDOT 3138 for aggregate base Class 5.

1.4.2.2 Liquid Limit and Plasticity Index

Liquid limit and plasticity index shall be determined in accordance with ASTM D 4318.

1.4.2.3 Moisture-Density Determinations

The maximum density and optimum moisture content shall be determined in accordance with ASTM D 1557.

1.4.2.4 Field Density Tests

Density shall be field measured in accordance with ASTM D 2922. For the method presented in ASTM D 2922 the calibration curves shall be checked and adjusted if necessary using only the sand cone method as described in paragraph Calibration, of the ASTM publication. Tests performed in accordance with ASTM D 2922 result in a wet unit weight of soil and when using this method, ASTM D 3017 shall be used to determine the moisture content of the soil. The calibration curves furnished with the moisture gauges shall also be checked along with density calibration checks as described in ASTM D 3017. The calibration checks of both the density and moisture gauges shall be made by the prepared containers of material method, as described in paragraph Calibration of ASTM D 2922, on each different type of material being tested at the beginning of a job and at intervals as directed.

1.4.2.5 Wear Test

Wear tests shall be made on GCA course material in conformance with ASTM C 131.

1.4.2.6 Soundness

Soundness tests shall be made on GCA in accordance with ASTM C 88.

1.4.3 Testing Frequency

1.4.3.1 Initial Tests

One of each of the following tests shall be performed on the proposed material prior to commencing construction to demonstrate that the proposed material meets all specified requirements when furnished. If materials from more than one source are going to be utilized, this testing shall be completed for each source.

a. Sieve Analysis including 0.02 mm size material.

b. Liquid limit and plasticity index moisture-density relationship.

c. Moisture-density relationship.

d. Wear.

e. Soundness.

1.4.3.2 In Place Tests

One of each of the following tests shall be performed on samples taken from the placed and compacted GCA. Samples shall be taken and tested at the rates indicated.

a. Density tests shall be performed on every lift of material placed and at a frequency of one set of tests for every 250 square meters, or portion thereof, of completed area.

b. Sieve Analysis including 0.02 mm size materialshall be performed for every 500 metric tons, or portion thereof, of material placed.

c. Liquid limit and plasticity index tests shall be performed at the same frequency as the sieve analysis.

1.4.4 Approval of Material

The source of the material shall be selected 10 days prior to the time the material will be required in the work. Tentative approval of material will be based on initial test results. Final approval of the materials will be based on sieve analysis, liquid limit, and plasticity index tests performed on samples taken from the completed and fully compacted GCA.

1.5 WEATHER LIMITATIONS

Construction shall be done when the atmospheric temperature is above2 degrees C. When the temperature falls below2 degrees C, the Contractor shall protect all completed areas by approved methods against detrimental effects of freezing. Completed areas damaged by freezing, rainfall, or other weather conditions shall be corrected to meet specified requirements.

1.6 PLANT, EQUIPMENT, AND TOOLS

All plant, equipment, and tools used in the performance of the work will be subject to approval before the work is started and shall be maintained in satisfactory working condition at all times. The equipment shall be adequate and shall have the capability of producing the required compaction, meeting grade controls, thickness control, and smoothness requirements as set forth herein.

PART 2 PRODUCTS

2.1 AGGREGATES

The GCA shall consist of clean, sound, durable particles of crushed stone, crushed slag, crushed gravel, crushed recycled concrete, angular sand, or other approved material in accordance with MnDOT 2211 and MnDOT 3138. GCA shall be free of silt and clay as defined by ASTM D 2487, organic matter, and other objectionable materials or coatings. The portion retained on the 4.75 mm sieve shall be known as coarse aggregate; that portion passing the 4.75 mm sieve shall be known as fine aggregate.

2.1.1 Coarse Aggregate

Coarse aggregates shall be angular particles of uniform density. When the coarse aggregate is supplied from more than one source, aggregate from each source shall meet the specified requirements and shall be stockpiled separately.

a. Crushed Gravel: Crushed gravel shall be manufactured by crushing gravels, and shall meet all the requirements specified below.

b. Crushed Stone: Crushed stone shall consist of freshly mined quarry rock, and shall meet all the requirements specified below.

c. Crushed Recycled Concrete: Crushed recycled concrete shall consist of previously hardened portland cement concrete or other concrete containing pozzolanic binder material. The recycled material shall be free of all reinforcing steel, bituminous concrete surfacing, and any other foreign material and shall be crushed and processed to meet the required gradations for coarse aggregate. Crushed recycled concrete shall meet all other applicable requirements specified below.

d. Crushed Slag: Crushed slag shall be an air-cooled blast-furnace product having an air dry unit weight of not less than1045 kg/cubic meteras determined by ASTM C 29/C 29M, and shall meet all the requirements specified below.

2.1.1.1 Graded-Crushed Aggregate Base Course

GCA coarse aggregate shall not show more than 40 percent loss when subjected to the Los Angeles abrasion test in accordance with ASTM C 131. GCA coarse aggregate shall not exhibit a loss greater than 40 percent weighted average, at five cycles, when tested for soundness in magnesium sulfate in accordance with ASTM C 88. The amount of flat and elongated particles shall not exceed 20 percent for the fraction retained on the19 mm sieve nor 20 percent for the fraction passing the19 mm sieve. A flat particle is one having a ratio of width to thickness greater than 3; an elongated particle is one having a ratio of length to width greater than 3. In the portion retained on each sieve specified, the crushed aggregate shall contain at least 90 percent by weight of crushed pieces having two or more freshly fractured faces with the area of each face being at least equal to 75 percent of the smallest midsectional area of the piece. When two fractures are contiguous, the angle between planes of the fractures must be at least 30 degrees in order to count as two fractured faces. Crushed gravel shall be manufactured from gravel particles 90 percent of which by weight are retained on the maximum size sieve listed in TABLE 1.

2.1.2 Fine Aggregate

Fine aggregates shall be angular particles of uniform density. When the fine aggregate is supplied from more than one source, aggregate from each source shall meet the specified requirements.

2.1.2.1 Graded-Crushed Aggregate Base Course

GCA fine aggregate shall consist of angular particles produced by crushing stone, slag, recycled concrete, or gravel that meets the requirements for wear and soundness specified for GCA coarse aggregate. Fine aggregate shall be produced by crushing only particles larger than 4.75 mm sieve in

size. The fine aggregate shall contain at least 90 percent by weight of particles having two or more freshly fractured faces in the portion passing the 4.75 mm sieve and retained on the 2 mm sieve, and in the portion passing the 2 mm sieve and retained on the 0.425 mm sieve. Fine aggregate shall be manufactured from gravel particles 95 percent of which by weight are retained on the 19 mm sieve.

2.1.3 Gradation Requirements

The specified gradation requirements shall apply to the completed base course. The aggregates shall have a maximum size of 19 mm and shall be continuously well graded within the limits specified in TABLE 1. Sieves shall conform to ASTM E 11 and MnDOT 3138 for aggregate base Class 5.

NOTE 1: Particles having diameters less than 0.02 mm shall not be in excess of 3 percent by weight of the total sample tested.

NOTE 2: The values are based on aggregates of uniform specific gravity. If materials from different sources are used for the coarse and fine aggregates, they shall be tested in accordance with ASTM C 127 and ASTM C 128 to determine their specific gravities. If the specific gravities vary by more than 10 percent, the percentages passing the various sieves shall be corrected as directed by the Contracting Officer.

2.1.4 Liquid Limit and Plasticity Index

Liquid limit and plasticity index requirements shall apply to the completed course and shall also apply to any component that is blended to meet the required gradation. The portion of any component or of the completed course passing the 0.425 mm sieve shall be either nonplastic or have a liquid limit not greater than 25 and a plasticity index not greater than 5.

PART 3 EXECUTION

3.1 GENERAL REQUIREMENTS

When the GCA is constructed in more than one layer, the previously constructed layer shall be cleaned of loose and foreign matter by sweeping with power sweepers or power brooms, except that hand brooms may be used in areas where power cleaning is not practicable. Adequate drainage shall be provided during the entire period of construction to prevent water from collecting or standing on the working area. Line and grade stakes shall be provided as necessary for control. Grade stakes shall be in lines parallel to the centerline of the area under construction and suitably spaced for string lining.

3.2 OPERATION OF AGGREGATE SOURCES

Aggregates shall be obtained from offsite sources.

3.3 STOCKPILING MATERIAL

Prior to stockpiling of material, storage sites shall be cleared and leveled by the Contractor. All materials, including approved material available from excavation and grading, shall be stockpiled in the manner and at the locations designated. Aggregates shall be stockpiled on the cleared and leveled areas designated by the Contracting Officer to prevent segregation. Materials obtained from different sources shall be stockpiled separately.

3.4 PREPARATION OF UNDERLYING COURSE

Prior to constructing the GCA, the underlying course or subgrade shall be cleaned of all foreign substances. At the time of construction of the GCA, the underlying course shall contain no frozen material. The surface of the underlying course or subgrade shall meet specified compaction and surface tolerances as specified in MnDOT 2112. The underlying course shall conform to Section 02300 EARTHWORK. Ruts or soft yielding spots in the underlying courses, areas having inadequate compaction, and deviations of the surface from the requirements set forth herein shall be corrected by loosening and removing soft or unsatisfactory material and by adding approved material, reshaping to line and grade, and recompacting to specified density requirements. For cohesionless underlying courses containing sands or gravels, as defined in ASTM D 2487, the surface shall be stabilized prior to placement of the GCA. Stabilization shall be accomplished by mixing GCA into the underlying course and compacting by approved methods. The stabilized material shall be considered as part of the underlying course and shall meet all requirements of the underlying course. The finished underlying course shall not be disturbed by traffic or other operations and shall be maintained by the Contractor in a satisfactory condition until theGCA is placed.

3.5 INSTALLATION

3.5.1 Mixing the Materials

The coarse and fine aggregates shall be mixed in a stationary plant, or in a traveling plant or bucket loader on an approved paved working area. The Contractor shall make adjustments in mixing procedures or in equipment as directed to obtain true grades, to minimize segregation or degradation, to obtain the required water content, and to insure a satisfactory GCAmeeting all requirements of this specification.

3.5.2 Placing

The mixed material shall be placed on the prepared subgrade or subbase in layers of uniform thickness with an approved spreader. When a compacted layer 150 mm or less in thickness is required, the material shall be placed in a single layer. When a compacted layer in excess of 150 mm is required, the material shall be placed in layers of equal thickness. No layer shall exceed 150 mm or less than 75 mm when compacted. The layers shall be so placed that when compacted they will be true to the grades or levels required with the least possible surface disturbance. Where the GCA is placed in more than one layer, the previously constructed layers shall be cleaned of loose and foreign matter by sweeping with power sweepers, power brooms, or hand brooms, as directed. Such adjustments in placing procedures or equipment shall be made as may be directed to obtain true grades, to minimize segregation and degradation, to adjust the water content, and to insure an acceptable GCA.

3.5.3 Grade Control

The finished and completed GCA shall conform to the lines, grades, and cross sections shown. Underlying material(s) shall be excavated and prepared at sufficient depth for the requiredGCA thickness so that the finished GCA with the subsequent surface course will meet the designated grades.

3.5.4 Edges of Base Course

TheGCA shall be placed so that the completed section will be a minimum of wider, on all sides, than the next layer that will be placed above it. Additionally, approved fill material shall be placed along the outer edges of GCA in sufficient quantities to compact to the thickness of the course being constructed, or to the thickness of each layer in a multiple layer course, allowing in each operation at least a 600 mm width of this material to be rolled and compacted simultaneously with rolling and compacting of each layer of GCA. If this base course material is to be placed adjacent to another pavement section, then the layers for both of these sections shall be placed and compacted along this edge at the same time.

3.5.5 Compaction

Each layer of the GCA shall be compacted as specified with approved compaction equipment. Water content shall be maintained during the compaction procedure to within plus or minus 10 percent of the optimum water content determined from laboratory tests as specified in paragraph SAMPLING AND TESTING. Rolling shall begin at the outside edge of the surface and proceed to the center, overlapping on successive trips at least one-half the width of the roller. Alternate trips of the roller shall be slightly different lengths. Speed of the roller shall be such that displacement of the aggregate does not occur. In all places not accessible to the rollers, the mixture shall be compacted with hand-operated power tampers. Compaction shall continue until each layer has a degree of compaction that is at least 100 percent of laboratory maximum density through the full depth of the layer. The Contractor shall make such adjustments in compacting or finishing procedures as may be directed to obtain true grades, to minimize segregation and degradation, to reduce or increase water content, and to ensure a satisfactory GCA. Any materials that are found to be unsatisfactory shall be removed and replaced with satisfactory material or reworked, as directed, to meet the requirements of this specification.

3.5.6 Thickness

Compacted thickness of the aggregate course shall be as indicated. No individual layer shall exceed 200 mm nor be less than 75 mm in compacted thickness. The total compacted thickness of the GCA course shall be within 13 mm of the thickness indicated. Where the measured thickness is more than 13 mm deficient, such areas shall be corrected by scarifying, adding new material of proper gradation, reblading, and recompacting as directed. Where the measured thickness is more than 13 mm thicker than indicated, the course shall be considered as conforming to the specified thickness requirements. Average job thickness shall be the average of all thickness measurements taken for the job, but shall be within 6 mm of the thickness indicated. The total thickness of theGCA course shall be measured at intervals in such a manner as to ensure one measurement for each 500 squaremeters of base course. Measurements shall be made in 75 mm diameter test holes penetrating the base course.

3.5.7 Proof Rolling

Proof rolling of the areas indicated shall be in addition to the compaction specified and shall consist of the application of 30 coverages with a heavy pneumatic-tired roller having four or more tires, each loaded to a minimum of 13,600 kg and inflated to a minimum of 1035 kPa. In areas designated, proof rolling shall be applied to the top of the underlying material on

which GCA is laid and to each layer of GCA. Water content of the underlying material shall be maintained at optimum or at the percentage directed from start of compaction to completion of proof rolling of that layer. Water content of each layer of the GCA shall be maintained at the optimum percentage directed from start of compaction to completion of proof rolling. Any GCA materials or any underlying materials that produce unsatisfactory results by proof rolling shall be removed and replaced with satisfactory materials, recompacted and proof rolled to meet these specifications.

3.5.8 Finishing

The surface of the top layer of GCA shall be finished after final compactionandproof rolling by cutting any overbuild to grade and rolling with a steel-wheeled roller. Thin layers of material shall not be added to the top layer of base course to meet grade. If the elevation of the top layer of GCA is 13 mm or more below grade, then the top layer should be scarified to a depth of at least 75 mm and new material shall be blended in , compacted and proof rolled to bring to grade. Adjustments to rolling and finishing procedures shall be made as directed to minimize segregation and degradation, obtain grades, maintain moisture content, and insure an acceptable base course. Should the surface become rough, corrugated, uneven in texture, or traffic marked prior to completion, the unsatisfactory portion shall be scarified, reworked and recompacted or it shall be replaced as directed.

3.5.9 Smoothness

The surface of the top layer shall show no deviations in excess of 10 mm when tested with a meter straightedge. Measurements shall be taken in successive positions parallel to the centerline of the area to be paved. Measurements shall also be taken perpendicular to the centerline at 15 meter intervals. Deviations exceeding this amount shall be corrected by removing material and replacing with new material, or by reworking existing material and compacting it to meet these specifications.

3.6 TRAFFIC

Traffic shall not be allowed on the completed GCA course.

3.7 MAINTENANCE

The GCA shall be maintained in a satisfactory condition until the full pavement section is completed and accepted. Maintenance shall include immediate repairs to any defects and shall be repeated as often as necessary to keep the area intact. Any GCA that is not paved over prior to the onset of winter, shall be retested to verify that it still complies with the requirements of this specification. Any area of GCA that is damaged shall be reworked or replaced as necessary to comply with this specification.

3.8 DISPOSAL OF UNSATISFACTORY MATERIALS

Any unsuitable materials that must be removed shall be disposed of as directed. No additional payments will be made for materials that must be replaced.

-- End of Section --

This page was intentionally left blank for duplex printing.

SECTION TABLE OF CONTENTS

DIVISION 02 - SITE WORK

SECTION 02741

BITUMINOUS PAVING FOR ROADS, STREETS AND OPEN STORAGE AREAS

PART 1 GENERAL

1.1 REFERENCES
1.2 Bituminous Paving Bituminous paving shall consist of paving driveways and parking lots where indicated in accordance with MnDOT 2331.
1.3 WEATHER LIMITATIONS
1.4 PROTECTION OF PAVEMENT
1.5 GRADE AND SURFACE-SMOOTHNESS REQUIREMENTS
1.5.1 Surface Smoothness
1.6 SAMPLING AND TESTING
1.6.1 Aggregates
1.6.2 Bituminous Mixtures

PART 2 PRODUCTS

2.1 BITUMINOUS HOT MIX
2.1.1 Aggregates
2.1.1.1 Coarse Aggregate
2.1.1.2 Fine Aggregate
2.1.1.3 Mineral Filler
2.1.2 Bituminous Material
2.1.3 Additives
2.2 PROPORTIONING OF MIXTURE
2.2.1 Job Mix Formula
2.2.2 Test Properties of Bituminous Mixtures
2.2.2.1 Stability, Flow, and Voids
2.2.2.2 Stability

PART 3 EXECUTION

3.1 BASE COURSE CONDITIONING
3.2 EXISTING PAVEMENT CONDITIONING
3.3 PREPARATION OF BITUMINOUS MIXTURES
3.4 WATER CONTENT OF AGGREGATES
3.5 STORAGE OF BITUMINOUS PAVING MIXTURE
3.6 TRANSPORTATION OF BITUMINOUS MIXTURE
3.7 SURFACE PREPARATION OF UNDERLYING COURSE
3.8 TACK COATING
3.9 PLACING
3.9.1 Handspreading in Lieu of Machine Spreading
3.10 COMPACTION OF MIXTURE
3.10.1 Correcting Deficient Areas
3.11 JOINTS
3.11.1 General

-- End of Section Table of Contents --

SECTION 02741

BITUMINOUS PAVING FOR ROADS, STREETS AND OPEN STORAGE AREAS

PART 1 GENERAL

1.1 REFERENCES

The publications listed below form a part of this specification to the extent referenced. The publications are referred to in the text by basic designation only.

AMERICAN SOCIETY FOR TESTING AND MATERIALS (ASTM)

ASTM C 29/C 29M	(1997) Bulk Density (Unit Weight) and Voids in Aggregate
ASTM C 127	(1988; R 1993) Specific Gravity and Absorption of Coarse Aggregate
ASTM C 128	(1993) Specific Gravity and Absorption of Fine Aggregate
ASTM C 131	(1996) Resistance to Degradation of Small-Size Coarse Aggregate by Abrasion and Impact in the Los Angeles Machine
ASTM D 242	(1995) Mineral Filler for Bituminous Paving Mixtures
ASTM D 422	(1963; R 1990) Particle-Size Analysis of Soils
ASTM D 2041	(1995) Theoretical Maximum Specific Gravity and Density of Bituminous Paving Mixtures
ASTM D 2216	(1992) Laboratory Determination of Water (Moisture) Content of Soil and Rock
ASTM D 3515	(1996) Hot-Mixed, Hot-Laid Bituminous Paving Mixtures
ASTM D 4791	(1995) Flat Particles, Elongated Particles, or Flat and Elongated Particles in Coarse Aggregate

1.2 Bituminous Paving

Bituminous paving shall consist of paving driveways and parking lots where indicated in accordance with MnDOT 2331.

1.3 WEATHER LIMITATIONS

Unless otherwise directed, bituminous courses shall not be constructed when temperature of the surface of the existing pavement or base course is below 5 degrees C.

1.4 PROTECTION OF PAVEMENT

After final rolling, no vehicular traffic of any kind shall be permitted on the pavement until the pavement has cooled to 60 degrees C.

1.5 GRADE AND SURFACE-SMOOTHNESS REQUIREMENTS

Finished surface of bituminous courses, when tested as specified below and in paragraph ACCEPTABILITY OF WORK, shall conform to gradeline and elevations shown and to surface-smoothness requirements specified.

1.5.1 Surface Smoothness

When a 3.66 m straightedge is laid on the surface parallel with the centerline of the paved area or transverse from crown to pavement edge, the surface shall vary not more than 6.4 mm from the straightedge.

1.6 SAMPLING AND TESTING

1.6.1 Aggregates

Sampling and testing of aggregates will be accomplished by the Contracting Officer in accordance with MnDOT 3139.

1.6.2 Bituminous Mixtures

Sampling and testing of bituminous mixtures will be accomplished by the Contracting Officer in accordance with MnDOT 3151.

PART 2 PRODUCTS

2.1 BITUMINOUS HOT MIX

Bituminous hot mix shall consist of coarse aggregate, fine aggregate, mineral filler, bituminous material, and approved additives, if required, of the qualities and in the proportions specified and shall conform to the requirements contained in paragraphs PROPORTIONING OF MIXTURE and ACCEPTABILITY OF WORK and MnDOT 2331.

2.1.1 Aggregates

Aggregates shall consist of crushed stone, crushed gravel, crushed slag, screening, sand, and mineral filler, as required. The portion of materials retained on the 4.75 mm sieve shall be known as coarse aggregate, the portion passing the 4.75 mm sieve and retained on the 0.075 mm sieve as fine aggregate, and the portion passing the 0.075 mm sieve as mineral filler. Aggregate gradation shall conform to gradation(s) specified in TABLE I. TABLE I is based on aggregates of uniform specific gravity; the percentage passing various sieves may be changed by the Contracting Officer when aggregates of varying specific gravities are used. Adjustments of percentage passing various sieves may be changed by the Contracting Officer when aggregates vary by more than 0.2 in specific gravity.

TABLE I. AGGREGATE GRADATION

Sieve Size	Wearing Course, Percent Passing	Base Course, Percent Passing
37.5 mm	100	100
19.0 mm	100	100
12.5 mm	100	100
4.75 mm	40-85	40-85
0.075 mm	2-8	2-8

2.1.1.1 Coarse Aggregate

Coarse aggregate shall consist of clean, sound, durable particles meeting the following requirements.

a. Percentage of loss shall not exceed 40 after 500 revolutions, as determined in accordance with ASTM C 131.

c. The dry weight of crushed slag shall not be less than 1200 kg/cubic m, as determined in accordance with ASTM C 29/C 29M.

d. Crushed gravel retained on the 4.75 mm sieve and each coarser sieve shall contain at least 75 percent by weight of crushed pieces having one or more fractured faces with the area of each face equal to at least 75 percent of the smallest midsectional area of piece. When two fractures are contiguous, the angle between planes of fractures shall be at least 30 degrees to count as two fractured faces.

e. Particle shape of crushed aggregates shall be essentially cubical. The quantity of flat and elongated particles in any sieve size shall not exceed 20 percent by weight, when determined in accordance with ASTM D 4791.

2.1.1.2 Fine Aggregate

Fine aggregate shall consist of clean, sound, durable particles, including natural sand or crushed stone, slag, or gravel that meets requirements for wear and soundness specified for coarse aggregate. Fine aggregate produced by crushing gravel shall have at least 90 percent by weight of crushed particles having two or more fractured faces in the portion retained on the 19 mm sieve. This requirement shall apply to the material before blending with natural sand when blending is necessary. Quantity of natural sand to be added to the wearing- and base-course mixtures shall not exceed 25 percent by weight of coarse and fine aggregate and material passing the 0.075 mm sieve. Natural sand shall be clean and free from clay and organic matter.

2.1.1.3 Mineral Filler

Mineral filler shall conform to ASTM D 242.

Grain size in mm	Percent Finer
0.05	70-100
0.02	35-65

Grain size in mm	Percent Finer
0.005	10-22

Grain size shall be determined in accordance with ASTM D 422.

2.1.2 Bituminous Material

Asphalt cement shall conform to ASTM D 2170, Grade AC-10.

2.1.3 Additives

The use of additives such as antistripping and antifoaming agents is subject to approval.

2.2 PROPORTIONING OF MIXTURE

2.2.1 Job Mix Formula

The JMF for the bituminous mixture will be furnished the Contractor by the Contracting Officer. The Contractor shall furnish samples of materials for mix design. Blending of the aggregates will be accomplished by the Government. No payment will be made for mixtures produced prior to the approval of the JMF. The formula will indicate the percentage of each stockpile and mineral filler, the percentage of each size aggregate, the percentage of bitumen, and the temperature of the completed mixture when discharged from the mixer. Tolerances are given in TABLE II for asphalt content, temperature, and aggregate grading for tests conducted on the mix as discharged from the mixing plant; however, the final evaluation of aggregate gradation and asphalt content will be in accordance with MnDOT 2331. Bituminous mix that deviates more than 14 degrees C from the JMF shall be rejected. The JMF may be adjusted during construction to improve paving mixtures, as directed, without adjustments in the contract unit prices.

2.2.2 Test Properties of Bituminous Mixtures

Finished mixture shall meet requirements described below when tested in accordance with . All samples will be compacted with 50 blows of specified hammer on each side of sample. When bituminous mixture fails to meet the requirements specified below, the paving operation shall be stopped until the cause of noncompliance is determined and corrected.

2.2.2.1 Stability, Flow, and Voids

Requirements for stability, flow, and voids are shown in TABLES III and IV for nonabsorptive and absorptive aggregates, respectively.

(1) The Contracting Officer may permit deviations from limits specified when gyratory method of design is used to develop the JMF.

(2) The Contracting Officer may permit deviation from limits specified for voids filled with bitumen in the intermediate course in order to stay within limits for percent voids total mix.

(1) The Contracting Officer may permit deviations from limits specified when gyratory method of design is used to develop the JMF.

(2) The Contracting Officer may permit deviation from limits specified for voids filled with bitumen in the intermediate course in order to stay within limits for percent voids total mix.

a. When the water-absorption value of the entire blend of aggregate does not exceed 2.5 percent as determined in accordance with ASTM C 127 and ASTM C 128, the aggregate is designated as nonabsorptive. The theoretical specific gravity computed from the apparent specific gravity or ASTM D 2041 will be used in computing voids total mix and voids filled with bitumen, and the mixture shall meet requirements in TABLE III.

b. When the water-absorption value of the entire blend of aggregate exceeds 2.5 percent as determined in accordance with ASTM C 127 and ASTM C 128, the aggregate is designated as absorptive. The theoretical specific gravity computed from the bulk-impregnated specific gravity method contained in ASTM D 2041 shall be used in computing percentages of voids total mix and voids filled with bitumen; the mixture shall meet requirements in TABLE IV.

2.2.2.2 Stability

The index of retained stability must be greater than 75 percent as determined by ASTM D 2041. When the index of retained stability is less than 75, the aggregate stripping tendencies may be countered by the use of hydrated lime or by treating the bitumen with an approved antistripping agent. The hydrated lime is considered as mineral filler and should be considered in the gradation requirements. The amount of hydrated lime or antistripping agent added to bitumen shall be sufficient, as approved, to produce an index of retained stability of not less than 75 percent. No additional payment will be made to the Contractor for addition of antistripping agent required.

PART 3 EXECUTION

3.1 BASE COURSE CONDITIONING

The surface of the base course will be inspected for adequate compaction and surface tolerances as specified. Unsatisfactory areas shall be corrected.

3.2 EXISTING PAVEMENT CONDITIONING

3.3 PREPARATION OF BITUMINOUS MIXTURES

Rates of feed of aggregates shall be regulated so that the moisture content and temperature of aggregates will be within specified tolerances. Aggregates, mineral filler, and bitumen shall be conveyed into the mixer in proportionate quantities required to meet the JMF. Mixing time shall be as required to obtain a uniform coating of the aggregate with the bituminous material. Temperature of bitumen at time of mixing shall not exceed 150 degrees C. Temperature of aggregate and mineral filler in the mixer shall not exceed 160 degrees C when bitumen is added. Overheated and carbonized mixtures or mixtures that foam shall not be used.

3.4 WATER CONTENT OF AGGREGATES

Drying operations shall reduce the water content of mixture to less than 0.75 percent. The water content test will be conducted in accordance with

ASTM D 2216; the weight of the sample shall be at least 500 grams. If the water content is determined on hot bin samples, the water content will be a weighted average based on composition of blend.

3.5 STORAGE OF BITUMINOUS PAVING MIXTURE

Storage shall conform to the applicable requirements of ASTM D 3515; however, in no case shall the mixture be stored for more than 4 hours.

3.6 TRANSPORTATION OF BITUMINOUS MIXTURE

Transportation from paving plant to site shall be in trucks having tight, clean, smooth beds lightly coated with an approved releasing agent to prevent adhesion of the mixture to the truck bodies. Excessive releasing agent shall be drained prior to loading. Each load shall be covered with canvas or other approved material of ample size to protect mixture from weather and to prevent loss of heat. Loads that have crusts of cold, unworkable material or that have become wet will be rejected. Hauling over freshly placed material will not be permitted.

3.7 SURFACE PREPARATION OF UNDERLYING COURSE

Prior to placing of the intermediate or wearing course, the underlying course shall be cleaned of all foreign or objectionable matter with power brooms and hand brooms.

3.8 TACK COATING

Contact surfaces of previously constructed pavement, curbs, manholes, and other structures shall be sprayed with a thin coat of bituminous material conforming to
ASTM D 2170, Grade AC-10 in accordance with MnDOT 2357.

3.9 PLACING

Bituminous courses shall be constructed only when the base course or existing pavement has no free water on the surface. Bituminous mixtures shall not be placed without ample time to complete spreading and rolling during daylight hours, unless approved satisfactory artificial lighting is provided.

3.9.1 Handspreading in Lieu of Machine Spreading

In areas where the use of machine spreading is impractical, the mixture shall be spread by hand. Spreading shall be in a manner to prevent segregation. The mixture shall be spread uniformly with hot rakes in a loose layer of thickness that, when compacted, will conform to required grade, density, and thickness.

3.10 COMPACTION OF MIXTURE

Rolling shall begin as soon after placing as the mixture will bear a roller without undue displacement. Delays in rolling freshly spread mixture will not be permitted. After initial rolling, preliminary tests of crown, grade, and smoothness shall be made by the Contractor. Deficiencies shall be corrected so that the finished course will conform to requirements for grade and smoothness specified herein. Crown, grade, and smoothness will be checked in each lot of completed pavement by the Contracting Officer for compliance and will be evaluated as specified in paragraph ACCEPTABILITY OF

WORK. After the Contractor is assured of meeting crown, grade, and smoothness requirements, rolling shall be continued until a mat density of 97.0 to 100.0 percent and a joint density of 95.0 to 100.0 percent of density of laboratory-compacted specimens of the same mixture is obtained. The density will be determined and evaluated as specified in paragraph ACCEPTABILITY OF WORK. Places inaccessible to rollers shall be thoroughly compacted with hot hand tampers.

3.10.1 Correcting Deficient Areas

Mixtures that become contaminated or are defective shall be removed to the full thickness of the course. Edges of the area to be removed shall be cut so that sides are perpendicular and parallel to the direction of traffic and so that the edges are vertical. Edges shall be sprayed with bituminous materials conforming to

ASTM D 2170, Grade AC-10. Fresh paving mixture shall be placed in the excavated areas in sufficient quantity so that the finished surface will conform to grade and smoothness requirements. Paving mixture shall be compacted to the density specified herein. Skin patching of an area that has been rolled shall not be permitted.

3.11 JOINTS

3.11.1 General

Joints between old and new pavements, between successive work days, or joints that have become cold (less than) shall be made to ensure continuous bond between the old and new sections of the course. All joints shall have the same texture and smoothness as other sections of the course. Contact surfaces of previously constructed pavements coated by dust, sand, or other objectionable material shall be cleaned by brushing or shall be cut back as directed. When directed by the Contracting Officer, the surface against which new material is placed shall be sprayed with a thin, uniform coat of bituminous material conforming to ASTM D 2170, Grade AC-10 Material shall be applied far enough in advance of placement of a fresh mixture to ensure adequate curing. Care shall be taken to prevent damage or contamination of the sprayed surface.

-- End of Section --

SECTION TABLE OF CONTENTS

DIVISION 02 - SITE WORK

SECTION 02748

BITUMINOUS TACK COAT

PART 1 GENERAL

1.1 REFERENCES
1.2 SUBMITTALS
1.3 PLANT, EQUIPMENT, MACHINES AND TOOLS
1.3.1 General Requirements
1.3.2 Bituminous Distributor
1.3.3 Power Brooms and Power Blowers
1.4 WEATHER LIMITATIONS

PART 2 PRODUCTS

2.1 TACK COAT

PART 3 EXECUTION

3.1 PREPARATION OF SURFACE
3.2 APPLICATION RATE
3.2.1 Tack Coat
3.3 APPLICATION TEMPERATURE
3.3.1 Viscosity Relationship
3.3.2 Temperature Ranges
3.4 APPLICATION
3.5 CURING PERIOD
3.6 FIELD QUALITY CONTROL
3.7 SAMPLING AND TESTING
3.7.1 Sampling
3.7.2 Calibration Test
3.7.3 Trial Applications
3.7.3.1 Tack Coat Trial Application Rate
3.7.4 Sampling and Testing During Construction

-- End of Section Table of Contents --

SECTION 02748

BITUMINOUS TACK COAT

PART 1 GENERAL

1.1 REFERENCES

The publications listed below form a part of this specification to the extent referenced. The publications are referred to in the text by basic designation only.

AMERICAN ASSOCIATION OF STATE HIGHWAY AND TRANSPORTATION OFFICIALS (AASHTO)

AASHTO T 40	(1978; R 1983) Sampling Bituminous Materials

AMERICAN SOCIETY OF TESTING AND MATERIALS (ASTM)

ASTM D 140	(1993) Sampling Bituminous Materials
ASTM D 2995	(1993) Determining Application Rate of Bituminous Distributors

1.2 SUBMITTALS

Government approval is required for submittals with a "G" designation; submittals not having a "G" designation are for information only. When used, a designation following the "G" designation identifies the office that will review the submittal for the Government. The following shall be submitted in accordance with Section 01330 SUBMITTAL PROCEDURES:

SD-03 Product Data

Waybills and Delivery Tickets;

Waybills and delivery tickets, during progress of the work.

SD-06 Test Reports

Samling and Testing;

Copies of all test results for bituminous materials, within 24 hours of completion of tests. Certified copies of the manufacturer's test reports indicating compliance with applicable specified requirements, not less than 30 days before the material is required in the work.

1.3 PLANT, EQUIPMENT, MACHINES AND TOOLS

1.3.1 General Requirements

Plant, equipment, machines and tools used in the work shall be subject to approval and shall be maintained in a satisfactory working condition at all times.

1.3.2 Bituminous Distributor

The distributor shall have pneumatic tires of such size and number to prevent rutting, shoving or otherwise damaging the base surface or other layers in the pavement structure. The distributor shall be designed and equipped to spray the bituminous material in a uniform coverage at the specified temperature, at readily determined and controlled rates with an allowable variation from the specified rate of not more than plus or minus 5 percent, and at variable widths. Distributor equipment shall include a separate power unit for the bitumen pump, full-circulation spray bars, tachometer, pressure gauges, volume-measuring devices, adequate heaters for heating of materials to the proper application temperature, a thermometer for reading the temperature of tank contents, and a hand hose attachment suitable for applying bituminous material manually to areas inaccessible to the distributor. The distributor shall be equipped to circulate and agitate the bituminous material during the heating process.

1.3.3 Power Brooms and Power Blowers

Power brooms and power blowers shall be suitable for cleaning the surfaces to which the bituminous coat is to be applied.

1.4 WEATHER LIMITATIONS

Bituminous coat shall be applied only when the surface to receive the bituminous coat is dry. Bituminous coat shall be applied only when the atmospheric temperature in the shade is 10 degrees C or above and when the temperature has not been below 2 degrees C for the 12 hours prior to application.

PART 2 PRODUCTS

2.1 TACK COAT

Asphalt shall conform to MnDOT 2357, MC-250, 800.

PART 3 EXECUTION

3.1 PREPARATION OF SURFACE

Immediately before applying the bituminous coat, all loose material, dirt, clay, or other objectionable material shall be removed from the surface to be treated. The surface shall be dry and clean at the time of treatment in accordance with MnDOT 2357.

3.2 APPLICATION RATE

The exact quantities within the range specified, which may be varied to suit field conditions, will be determined by the Contracting Officer.

3.2.1 Tack Coat

Bituminous material for the tack coat shall be applied in quantities of not less than 0.20 liter nor more than 0.70 liter per square meter of pavement

surface.

3.3 APPLICATION TEMPERATURE

3.3.1 Viscosity Relationship

Asphalt application temperature shall provide an application viscosity between 10 and 60 seconds, Saybolt Furol, or between 20 and 120 square mm/sec, kinematic. The temperature viscosity relation shall be furnished to the Contracting Officer.

3.3.2 Temperature Ranges

The viscosity requirements shall determine the application temperature to be used. The following is a normal range of application temperatures:

*These temperature ranges exceed the flash point of the material and care should be taken in their heating.

3.4 APPLICATION

Following preparation and subsequent inspection of the surface, the bituminous coat shall be applied at the specified rate with uniform distribution over the surface to be treated. All areas and spots missed by the distributor shall be properly treated with the hand spray. Until the succeeding layer of pavement is placed, the surface shall be maintained by protecting the surface against damage and by repairing deficient areas at no additional cost to the Government. If required, clean dry sand shall be spread to effectively blot up any excess bituminous material. No smoking, fires, or flames other than those from the heaters that are a part of the equipment shall be permitted within 8 meters of heating, distributing, and transferring operations of bituminous material other than bituminous emulsions.

3.5 CURING PERIOD

Following application of the bituminous material and prior to application of the succeeding layer of pavement, the bituminous coat shall be allowed to cure and to obtain evaporation of any volatiles or moisture.

3.6 FIELD QUALITY CONTROL

Samples of the bituminous material shall be tested for compliance in accordance with MnDOT 2357.

3.7 SAMPLING AND TESTING

Sampling and testing shall be performed by an approved commercial testing laboratory or by facilities furnished by the Contractor. No work requiring testing will be permitted until the facilities have been inspected and approved.

3.7.1 Sampling

The samples of bituminous material, unless otherwise specified, shall be in accordance with MnDOT 2357 and ASTM D 140 or AASHTO T 40. Sources from which bituminous materials are to be obtained shall be selected and

notification furnished the Contracting Officer within 15 days after the award of the contract.

3.7.2 Calibration Test

The Contractor shall furnish all equipment, materials, and labor necessary to calibrate the bituminous distributor. Calibration shall be made with the approved job material and prior to applying the bituminous coat material to the prepared surface. Calibration of the bituminous distributor shall be in accordance with ASTM D 2995.

3.7.3 Trial Applications

Before providing the complete bituminous coat, three lengths of at least 30 meters for the full width of the distributor bar shall be applied to evaluate the amount of bituminous material that can be satisfactorily applied.

3.7.3.1 Tack Coat Trial Application Rate

Unless otherwise authorized, the trial application rate of bituminous tack coat materials shall be applied in the amount of 0.20 liters per square meter. Other trial applications shall be made using various amounts of material as may be deemed necessary.

3.7.4 Sampling and Testing During Construction

Quality control sampling and testing shall be performed as required in MnDOT 2357.

-- End of Section --

This page was intentionally left blank for duplex printing.

SECTION TABLE OF CONTENTS

DIVISION 02 - SITE WORK

SECTION 02763

PAVEMENT MARKINGS

04/01

PART 1 GENERAL

1.1 REFERENCES
1.2 SUBMITTALS
1.3 DELIVERY AND STORAGE
1.4 EQUIPMENT
1.4.1 Paint Application Equipment

PART 2 PRODUCTS

2.1 PAINT
2.2 Not Used
2.2.1 Not Used
2.2.2 Not Used
2.2.3 Asphalt Concrete Primer
2.2.4 Portland Cement Concrete Primer

PART 3 EXECUTION

3.1 SURFACE PREPARATION
3.1.1 Pretreatment for Early Painting
3.1.2 Cleaning Existing Pavement Markings
3.1.3 Cleaning Concrete Curing Compounds
3.2 APPLICATION
3.2.1 Paint
3.2.1.1 Rate of Application
3.2.1.2 Drying

-- End of Section Table of Contents --

SECTION 02763

PAVEMENT MARKINGS
04/01

PART 1 GENERAL

1.1 REFERENCES

The publications listed below form a part of this specification to the extent referenced. The publications are referred to in the text by basic designation only.

FEDERAL SPECIFICATIONS (FS)

FS TT-P-1952	(Rev D; Canc. Notice 1) Paint, Traffic and Airfield Marking, Waterborne (Metric)

1.2 SUBMITTALS

Government approval is required for submittals with a "G" designation; submittals not having a "G" designation are for information only. When used, a designation following the "G" designation identifies the office that will review the submittal for the Government. The following shall be submitted in accordance with Section 01330 SUBMITTAL PROCEDURES:

SD-03 Product Data

Equipment; G-AO,

Lists of proposed equipment, including descriptive data, and notifications of proposed Contractor actions as specified in this section. List of removal equipment shall include descriptive data indicating area of coverage per pass, pressure adjustment range, tank and flow capacities, and safety precautions required for the equipment operation.

Composition Requirements;

Manufacturer's current printed product description and Material Safety Data Sheets (MSDS) for each type paint/color proposed for use.

SD-06 Test Reports; G-AO

Sampling and Testing;

Certified copies of the test reports, prior to the use of the materials at the jobsite. Testing shall be performed in an approved independent laboratory.

SD-07 Certificates; G-AO

Volatile Organic Compound (VOC);

Certificate stating that the proposed pavement marking paint meets the VOC regulations of the local Air Pollution Control District having jurisdiction over the geographical area in which the project is located.

1.3 DELIVERY AND STORAGE

All materials shall be delivered and stored in sealed containers that plainly show the designated name, formula or specification number, batch number, color, date of manufacture, manufacturer's name, and directions, all of which shall be plainly legible at time of use.

1.4 EQUIPMENT

All machines, tools and equipment used in the performance of the work shall be approved and maintained in satisfactory operating condition. Equipment operating on roads and runways shall display low speed traffic markings and traffic warning lights.

1.4.1 Paint Application Equipment

The equipment to apply paint to pavements shall be a self-propelled or mobile-drawn pneumatic spraying machine with suitable arrangements of atomizing nozzles and controls to obtain the specified results. The machine shall have a speed during application not less than 5 mph, and shall be capable of applying the stripe widths indicated, at the paint coverage rate specified in paragraph APPLICATION, and of even uniform thickness with clear-cut edges. Equipment used for marking streets and highways shall be capable of placing the prescribed number of lines at a single pass as solid lines, intermittent lines or a combination of solid and intermittent lines using a maximum of two different colors of paint as specified. . The paint applicator shall have paint reservoirs or tanks of sufficient capacity and suitable gauges to apply paint in accordance with requirements specified. Tanks shall be equipped with suitable air-driven mechanical agitators. The spray mechanism shall be equipped with quick-action valves conveniently located, and shall include necessary pressure regulators and gauges in full view and reach of the operator. Paint strainers shall be installed in paint supply lines to ensure freedom from residue and foreign matter that may cause malfunction of the spray guns. The paint applicator shall be readily adaptable for attachment of an air-actuated dispenser for the reflective media approved for use. Pneumatic spray guns shall be provided for hand application of paint in areas where the mobile paint applicator cannot be used.

PART 2 PRODUCTS

2.1 PAINT

The paint shall be homogeneous, easily stirred to smooth consistency, and shall show no hard settlement or other objectionable characteristics during a storage period of 6 months. Paints for parking lots, roads, and streets shall conform to FS TT-P-1952, color as indicated . Pavement marking paints shall comply with applicable state and local laws enacted to ensure compliance with Federal Clean Air Standards. Paint materials shall conform to the restrictions of the local Air Pollution Control District.

2.2 Not Used

2.2.1 Not Used

2.2.2 Not Used

2.2.3 Asphalt Concrete Primer

The primer for asphalt concrete pavements shall be a thermosetting adhesive with a solids content of pigment reinforced synthetic rubber and synthetic plastic resin dissolved and/or dispersed in a volatile organic compound (VOC). Solids content shall not be less than 10 percent by weight at (70 degrees F) and 60 percent relative humidity. A wet film thickness of (0.005 inch) plus or minus (0.001 inch), shall dry to a tack-free condition in less than 5 minutes.

2.2.4 Portland Cement Concrete Primer

The primer for Portland cement concrete pavements shall be an epoxy resin primer. The primer shall be of the type recommended by the manufacturer of the thermoplastic composition. Epoxy primers recommended by the manufacturer shall be approved by the Contracting Officer prior to use. Requests for approval shall be accompanied with technical data, instructions for use, and a (1 quart) sample of the primer material.

PART 3 EXECUTION

3.1 SURFACE PREPARATION

Surfaces to be marked shall be thoroughly cleaned before application of the pavement marking material. Dust, dirt, and other granular surface deposits shall be removed by sweeping, blowing with compressed air, rinsing with water or a combination of these methods as required. Rubber deposits, surface laitance, existing paint markings, and other coatings adhering to the pavement shall be completely removed with scrapers, wire brushes, sandblasting, approved chemicals, or mechanical abrasion as directed. Areas of old pavement affected with oil or grease shall be scrubbed with several applications of trisodium phosphate solution or other approved detergent or degreaser, and rinsed thoroughly after each application. After cleaning, oil-soaked areas shall be sealed with cut shellac to prevent bleeding through the new paint. Pavement surfaces shall be allowed to dry, when water is used for cleaning, prior to striping or marking. Surfaces shall be recleaned, when work has been stopped due to rain.

3.1.1 Pretreatment for Early Painting

Where early painting is required on rigid pavements, a pretreatment with an aqueous solution containing 3 percent phosphoric acid and 2 percent zinc chloride shall be applied to prepared pavement areas prior to painting.

3.1.2 Cleaning Existing Pavement Markings

In general, markings shall not be placed over existing pavement marking patterns. Existing pavement markings, which are in good condition but interfere or conflict with the newly applied marking patterns, shall be removed. Deteriorated or obscured markings that are not misleading or confusing or interfere with the adhesion of the new marking material do not require removal. Whenever grinding, scraping, sandblasting or other operations are performed the work must be conducted in such a manner that the finished pavement surface is not damaged or left in a pattern that is misleading or confusing. When these operations are completed the pavement surface shall be blown off with compressed air to remove residue and debris

resulting from the cleaning work.

3.1.3 Cleaning Concrete Curing Compounds

On new Portland cement concrete pavements, cleaning operations shall not begin until a minimum of 30 days after the placement of concrete. All new concrete pavements shall be cleaned by either sandblasting or water blasting. The extent of the blasting work shall be to clean and prepare the concrete surface as follows:

a. There is no visible evidence of curing compound on the peaks of the textured concrete surface.

b. There are no heavy puddled deposits of curing compound in the valleys of the textured concrete surface.

c. All remaining curing compound is intact; all loose and flaking material is removed.

d. The peaks of the textured pavement surface are rounded in profile and free of sharp edges and irregularities.

e. The surface to be marked is dry.

3.2 APPLICATION

All pavement markings and patterns shall be placed as shown on the plans.

3.2.1 Paint

Paint shall be applied to clean, dry surfaces, and only when air and pavement temperatures are above 5 degrees C 40 degrees F and less than 35 degrees C. 95 degrees F. Paint temperature shall be maintained within these same limits. New asphalt pavement surfaces and new Portland concrete cement shall be allowed to cure for a period of not less than 30 days before applications of paint. Paint shall be applied pneumatically with approved equipment at rate of coverage specified . The Contractor shall provide guide lines and templates as necessary to control paint application. Special precautions shall be taken in marking numbers, letters, and symbols. Edges of markings shall be sharply outlined.

3.2.1.1 Rate of Application

Nonreflective Markings: Paint shall be applied evenly to the pavement surface to be coated at a rate of 2.9 plus or minus 0.5 square meter per liter (105 plus or minus 5 square feet per gallon).

3.2.1.2 Drying

The maximum drying time requirements of the paint specifications will be strictly enforced to prevent undue softening of bitumen, and pickup, displacement, or discoloration by tires of traffic. If there is a delay in drying of the markings, painting operations shall be discontinued until cause of the slow drying is determined and corrected.

-- End of Section --

This page was intentionally left blank for duplex printing.

SECTION TABLE OF CONTENTS

DIVISION 02 - SITE WORK

SECTION 02770

CONCRETE SIDEWALKS AND CURBS AND GUTTERS

PART 1 GENERAL

1.1 REFERENCES
1.2 SUBMITTALS
1.3 WEATHER LIMITATIONS
1.3.1 Placing During Cold Weather
1.3.2 Placing During Warm Weather
1.4 PLANT, EQUIPMENT, MACHINES, AND TOOLS
1.4.1 General Requirements
1.4.2 Slip Form Equipment

PART 2 PRODUCTS

2.1 CONCRETE
2.1.1 Air Content
2.1.2 Slump
2.1.3 Reinforcement Steel
2.2 CONCRETE CURING MATERIALS
2.2.1 Impervious Sheet Materials
2.2.2 Burlap
2.2.3 White Pigmented Membrane-Forming Curing Compound
2.3 CONCRETE PROTECTION MATERIALS
2.4 JOINT FILLER STRIPS
2.4.1 Contraction Joint Filler for Curb and Gutter
2.4.2 Expansion Joint Filler, Premolded
2.5 JOINT SEALANTS
2.5.1 Joint Sealant, Cold-Applied
2.5.2 Joint Sealant, Hot-Poured
2.6 FORM WORK
2.6.1 Sidewalk Forms
2.6.2 Curb and Gutter Forms

PART 3 EXECUTION

3.1 SUBGRADE PREPARATION
3.1.1 Sidewalk Subgrade
3.1.2 Curb and Gutter Subgrade
3.1.3 Maintenance of Subgrade
3.2 FORM SETTING
3.2.1 Sidewalks
3.2.2 Curbs and Gutters
3.3 SIDEWALK CONCRETE PLACEMENT AND FINISHING
3.3.1 Formed Sidewalks
3.3.2 Concrete Finishing
3.3.3 Edge and Joint Finishing
3.3.4 Surface and Thickness Tolerances
3.4 CURB AND GUTTER CONCRETE PLACEMENT AND FINISHING
3.4.1 Formed Curb and Gutter

3.4.2 Curb and Gutter Finishing
3.4.3 Concrete Finishing
3.4.4 Joint Finishing
3.4.5 Surface and Thickness Tolerances
3.5 SIDEWALK JOINTS
3.5.1 Sidewalk Contraction Joints
3.5.2 Sidewalk Expansion Joints
3.6 CURB AND GUTTER JOINTS
3.6.1 Contraction Joints
3.6.2 Expansion Joints
3.7 CURING AND PROTECTION
3.7.1 General Requirements
3.7.1.1 Mat Method
3.7.1.2 Impervious Sheeting Method
3.7.1.3 Membrane Curing Method
3.7.2 Backfilling
3.7.3 Protection
3.7.4 Protective Coating
3.7.4.1 Application
3.7.4.2 Precautions
3.8 FIELD QUALITY CONTROL
3.8.1 General Requirements
3.8.2 Concrete Testing
3.8.2.1 Strength Testing
3.8.2.2 Air Content
3.8.2.3 Slump Test
3.8.3 Thickness Evaluation
3.8.4 Surface Evaluation
3.9 SURFACE DEFICIENCIES AND CORRECTIONS
3.9.1 Thickness Deficiency
3.9.2 High Areas
3.9.3 Appearance

-- End of Section Table of Contents --

SECTION 02770

CONCRETE SIDEWALKS AND CURBS AND GUTTERS

PART 1 GENERAL

1.1 REFERENCES

The publications listed below form a part of this specification to the extent referenced. The publications are referred to in the text by basic designation only.

AMERICAN ASSOCIATION OF STATE HIGHWAY AND TRANSPORTATION OFFICIALS (AASHTO)

AASHTO M 182	(1991) Burlap Cloth Made from Jute or Kenaf

AMERICAN SOCIETY FOR TESTING AND MATERIALS (ASTM)

ASTM A 185	(1997) Steel Welded Wire Fabric, Plain, for Concrete Reinforcement
ASTM A 615/A 615M	(1996a) Deformed and Plain Billet-Steel Bars for Concrete Reinforcement
ASTM A 616/A 616M	(1996a) Rail-Steel Deformed and Plain Bars for Concrete Reinforcement
ASTM A 617/A 617M	(1996a) Axle-Steel Deformed and Plain Bars for Concrete Reinforcement
ASTM C 31/C 31M	(1996) Making and Curing Concrete Test Specimens in the Field
ASTM C 171	(1997) Sheet Materials for Curing Concrete
ASTM C 173	(1996) Air Content of Freshly Mixed Concrete by the Volumetric Method
ASTM C 231	(1997) Air Content of Freshly Mixed Concrete by the Pressure Method
ASTM C 309	(1997) Liquid Membrane-Forming Compounds for Curing Concrete
ASTM C 920	(1995) Elastomeric Joint Sealants
ASTM D 1751	(1983; R 1991) Preformed Expansion Joint Filler for Concrete Paving and Structural Construction (Nonextruding and Resilient Bituminous Types)
ASTM D 1752	(1984; R 1996) Preformed Sponge Rubber and Cork Expansion Joint Fillers for Concrete

	Paving and Structural Construction
ASTM D 3405	(1996) Joint Sealants, Hot-Applied, for Concrete and Asphalt Pavements

1.2 SUBMITTALS

Government approval is required for submittals with a "G" designation; submittals not having a "G" designation are for information only. When used, a designation following the "G" designation identifies the office that will review the submittal for the Government. The following shall be submitted in accordance with Section 01330 SUBMITTAL PROCEDURES:

SD-03 Product Data

Concrete; G-AO

Copies of certified delivery tickets for all concrete used in the construction.

SD-06 Test Reports

Field Quality Control; G-AO

Copies of all test reports within 24 hours of completion of the test.

1.3 WEATHER LIMITATIONS

1.3.1 Placing During Cold Weather

Concrete placement shall not take place when the air temperature reaches 5 degrees C and is falling, or is already below that point. Placement may begin when the air temperature reaches 2 degrees C and is rising, or is already above 5 degrees C. Provisions shall be made to protect the concrete from freezing during the specified curing period. If necessary to place concrete when the temperature of the air, aggregates, or water is below 2 degrees C, placement and protection shall be approved in writing. Approval will be contingent upon full conformance with the following provisions. The underlying material shall be prepared and protected so that it is entirely free of frost when the concrete is deposited. Mixing water and aggregates shall be heated as necessary to result in the temperature of the in-place concrete being between Methods and equipment for heating shall be approved. The aggregates shall be free of ice, snow, and frozen lumps before entering the mixer. Covering and other means shall be provided for maintaining the concrete at a temperature of at least 10 degrees C for not less than 72 hours after placing, and at a temperature above freezing for the remainder of the curing period.

1.3.2 Placing During Warm Weather

The temperature of the concrete as placed shall not exceed 30 degrees C except where an approved retarder is used. The mixing water and/or aggregates shall be cooled, if necessary, to maintain a satisfactory placing temperature. The placing temperature shall not exceed 35 degrees Cat any time.

1.4 PLANT, EQUIPMENT, MACHINES, AND TOOLS

1.4.1 General Requirements

Plant, equipment, machines, and tools used in the work shall be subject to approval and shall be maintained in a satisfactory working condition at all times. The equipment shall have the capability of producing the required product, meeting grade controls, thickness control and smoothness requirements as specified. Use of the equipment shall be discontinued if it produces unsatisfactory results. The Contracting Officer shall have access at all times to the plant and equipment to ensure proper operation and compliance with specifications.

1.4.2 Slip Form Equipment

Slip form paver or curb forming machine, will be approved based on trial use on the job and shall be self-propelled, automatically controlled, crawler mounted, and capable of spreading, consolidating, and shaping the plastic concrete to the desired cross section in 1 pass.

PART 2 PRODUCTS

2.1 CONCRETE

Concrete shall have a minimum compressive strength of 24 MPa at 28 days. Maximum size of aggregate shall be

2.1.1 Air Content

Mixtures shall have air content by volume of concrete of 5 to 7 percent, based on measurements made immediately after discharge from the mixer.

2.1.2 Slump

The concrete slump shall be in accordance with MnDOT 2521 Walks and MnDOT 2531 Concrete Curbing .

2.1.3 Reinforcement Steel

Reinforcement bars shall conform to ASTM A 615/A 615M, ASTM A 616/A 616M, or ASTM A 617/A 617M. Wire mesh reinforcement shall conform to ASTM A 185.

2.2 CONCRETE CURING MATERIALS

2.2.1 Impervious Sheet Materials

Impervious sheet materials shall conform to ASTM C 171, type optional, except that polyethylene film, if used, shall be white opaque.

2.2.2 Burlap

Burlap shall conform to AASHTO M 182.

2.2.3 White Pigmented Membrane-Forming Curing Compound

White pigmented membrane-forming curing compound shall conform to ASTM C 309, Type 2.

2.3 CONCRETE PROTECTION MATERIALS

Concrete protection materials shall be a linseed oil mixture of equal parts, by volume, of linseed oil and either mineral spirits, naphtha, or turpentine. At the option of the contractor, commercially prepared linseed oil mixtures, formulated specifically for application to concrete to provide protection against the action of deicing chemicals may be used, except that emulsified mixtures are not acceptable.

2.4 JOINT FILLER STRIPS

2.4.1 Contraction Joint Filler for Curb and Gutter

Contraction joint filler for curb and gutter shall consist of hard-pressed fiberboard.

2.4.2 Expansion Joint Filler, Premolded

Expansion joint filler, premolded, shall conform to ASTM D 1751 or ASTM D 1752, 10 mm thick, unless otherwise indicated.

2.5 JOINT SEALANTS

2.5.1 Joint Sealant, Cold-Applied

Joint sealant, cold-applied shall conform to ASTM C 920.

2.5.2 Joint Sealant, Hot-Poured

Joint sealant, hot-poured shall conform to ASTM D 3405.

2.6 FORM WORK

Form work shall be designed and constructed to ensure that the finished concrete will conform accurately to the indicated dimensions, lines, and elevations, and within the tolerances specified. Forms shall be of wood or steel, straight, of sufficient strength to resist springing during depositing and consolidating concrete. Wood forms shall be surfaced plank, 50 mm nominal thickness, straight and free from warp, twist, loose knots, splits or other defects. Wood forms shall have a nominal length of Radius bends may be formed with 19 mm boards, laminated to the required thickness. Steel forms shall be channel-formed sections with a flat top surface and with welded braces at each end and at not less than two intermediate points. Ends of steel forms shall be interlocking and self-aligning. Steel forms shall include flexible forms for radius forming, corner forms, form spreaders, and fillers. Steel forms shall have a nominal length of 3 m with a minimum of 3 welded stake pockets per form. Stake pins shall be solid steel rods with chamfered heads and pointed tips designed for use with steel forms.

2.6.1 Sidewalk Forms

Sidewalk forms shall be of a height equal to the full depth of the finished sidewalk.

2.6.2 Curb and Gutter Forms

Curb and gutter outside forms shall have a height equal to the full depth of the curb or gutter. The inside form of curb shall have batter as indicated and shall be securely fastened to and supported by the outside form. Rigid forms shall be provided for curb returns, except that benders

or thin plank forms may be used for curb or curb returns with a radius of 3 m or more, where grade changes occur in the return, or where the central angle is such that a rigid form with a central angle of 90 degrees cannot be used. Back forms for curb returns may be made of 38 mm benders, for the full height of the curb, cleated together. In lieu of inside forms for curbs, a curb "mule" may be used for forming and finishing this surface, provided the results are approved.

PART 3 EXECUTION

3.1 SUBGRADE PREPARATION

The subgrade shall be constructed to the specified grade and cross section prior to concrete placement. Subgrade shall be placed and compacted in conformance with Section 2300 EARTHWORK.

3.1.1 Sidewalk Subgrade

The subgrade shall be tested for grade and cross section with a template extending the full width of the sidewalk and supported between side forms.

3.1.2 Curb and Gutter Subgrade

The subgrade shall be tested for grade and cross section by means of a template extending the full width of the curb and gutter. The subgrade shall be of materials equal in bearing quality to the subgrade under the adjacent pavement.

3.1.3 Maintenance of Subgrade

The subgrade shall be maintained in a smooth, compacted condition in conformity with the required section and established grade until the concrete is placed. The subgrade shall be in a moist condition when concrete is placed. The subgrade shall be prepared and protected to produce a subgrade free from frost when the concrete is deposited.

3.2 FORM SETTING

Forms shall be set to the indicated alignment, grade and dimensions. Forms shall be held rigidly in place by a minimum of 3 stakes per form placed at intervals not to exceed Corners, deep sections, and radius bends shall have additional stakes and braces, as required. Clamps, spreaders, and braces shall be used where required to ensure rigidity in the forms. Forms shall be removed without injuring the concrete. Bars or heavy tools shall not be used against the concrete in removing the forms. Any concrete found defective after form removal shall be promptly and satisfactorily repaired. Forms shall be cleaned and coated with form oil each time before concrete is placed. Wood forms may, instead, be thoroughly wetted with water before concrete is placed, except that with probable freezing temperatures, oiling is mandatory.

3.2.1 Sidewalks

Forms for sidewalks shall be set with the upper edge true to line and grade with an allowable tolerance of 3 mm in any 3 m long section. After forms are set, grade and alignment shall be checked with a 3 m straightedge. Forms shall have a transverse slope of 20 mm per meter with the low side adjacent to the roadway. Side forms shall not be removed for 12 hours after finishing has been completed.

3.2.2 Curbs and Gutters

The forms of the front of the curb shall be removed not less than 2 hours nor more than 6 hours after the concrete has been placed. Forms back of curb shall remain in place until the face and top of the curb have been finished, as specified for concrete finishing. Gutter forms shall not be removed while the concrete is sufficiently plastic to slump in any direction.

3.3 SIDEWALK CONCRETE PLACEMENT AND FINISHING

3.3.1 Formed Sidewalks

Concrete shall be placed in the forms in one layer. When consolidated and finished, the sidewalks shall be of the thickness indicated. After concrete has been placed in the forms, a strike-off guided by side forms shall be used to bring the surface to proper section to be compacted. The concrete shall be consolidated with an approved vibrator, and the surface shall be finished to grade with a strike off.

3.3.2 Concrete Finishing

After straightedging, when most of the water sheen has disappeared, and just before the concrete hardens, the surface shall be finished with a wood float or darby to a smooth and uniformly fine granular or sandy texture free of waves, irregularities, or tool marks. A scored surface shall be produced by brooming with a fiber-bristle brush in a direction transverse to that of the traffic, followed by edging.

3.3.3 Edge and Joint Finishing

All slab edges, including those at formed joints, shall be finished with an edger having a radius of 3 mm. Transverse joint shall be edged before brooming, and the brooming shall eliminate the flat surface left by the surface face of the edger. Corners and edges which have crumbled and areas which lack sufficient mortar for proper finishing shall be cleaned and filled solidly with a properly proportioned mortar mixture and then finished.

3.3.4 Surface and Thickness Tolerances

Finished surfaces shall not vary more than 8 mm from the testing edge of a 3 m straightedge. Permissible deficiency in section thickness will be up to 6 mm .

3.4 CURB AND GUTTER CONCRETE PLACEMENT AND FINISHING

3.4.1 Formed Curb and Gutter

Concrete shall be placed to the section required in a single lift. Consolidation shall be achieved by using approved mechanical vibrators. Curve shaped gutters shall be finished with a standard curb "mule".

3.4.2 Curb and Gutter Finishing

Approved slipformed curb and gutter machines may be used in lieu of hand placement.

3.4.3 Concrete Finishing

Exposed surfaces shall be floated and finished with a smooth wood float until true to grade and section and uniform in texture. Floated surfaces shall then be brushed with a fine-hair brush with longitudinal strokes. The edges of the gutter and top of the curb shall be rounded with an edging tool to a radius of Immediately after removing the front curb form, the face of the curb shall be rubbed with a wood or concrete rubbing block and water until blemishes, form marks, and tool marks have been removed. The front curb surface, while still wet, shall be brushed in the same manner as the gutter and curb top. The top surface of gutter and entrance shall be finished to grade with a wood float.

3.4.4 Joint Finishing

Curb edges at formed joints shall be finished as indicated.

3.4.5 Surface and Thickness Tolerances

Finished surfaces shall not vary more than 6 mm from the testing edge of a 3 m straightedge. Permissible deficiency in section thickness will be up to 6 mm.

3.5 SIDEWALK JOINTS

Sidewalk joints shall be constructed to divide the surface into rectangular areas. Transverse contraction joints shall be spaced at a distance equal to the sidewalk width or 1. 5 m on centers, whichever is less, and shall be continuous across the slab. Longitudinal contraction joints shall be constructed along the centerline of all sidewalks 3 m or more in width. Transverse expansion joints shall be installed at sidewalk returns and opposite expansion joints in adjoining curbs. Where the sidewalk is not in contact with the curb, transverse expansion joints shall be installed as indicated. Expansion joints shall be formed about structures and features which project through or into the sidewalk pavement, using joint filler of the type, thickness, and width indicated.

3.5.1 Sidewalk Contraction Joints

The contraction joints shall be formed in the fresh concrete by cutting a groove in the top portion of the slab to a depth of at least one-fourth of the sidewalk slab thickness, using a jointer to cut the groove, or by sawing a groove in the hardened concrete with a power-driven saw, unless otherwise approved. Sawed joints shall be constructed by sawing a groove in the concrete with a 3 mm blade to the depth indicated. An ample supply of saw blades shall be available on the job before concrete placement is started, and at least one standby sawing unit in good working order shall be available at the jobsite at all times during the sawing operations.

3.5.2 Sidewalk Expansion Joints

Expansion joints shall be formed with 10 mm joint filler strips. Joint filler shall be placed with top edge 6 mm below the surface and shall be held in place with steel pins or other devices to prevent warping of the filler during floating and finishing. Immediately after finishing operations are completed, joint edges shall be rounded with an edging tool having a radius of 3 mm, and concrete over the joint filler shall be removed. At the end of the curing period, expansion joints shall be cleaned and filled with joint sealant. The joint opening shall be

thoroughly cleaned before the sealing material is placed. Sealing material shall not be spilled on exposed surfaces of the concrete. Concrete at the joint shall be surface dry and atmospheric and concrete temperatures shall be above 10 degrees C at the time of application of joint sealing material. Excess material on exposed surfaces of the concrete shall be removed immediately and concrete surfaces cleaned.

3.6 CURB AND GUTTER JOINTS

Curb and gutter joints shall be constructed at right angles to the line of curb and gutter.

3.6.1 Contraction Joints

Contraction joints shall be constructed directly opposite contraction joints in abutting portland cement concrete pavements and spaced so that monolithic sections between curb returns will not be less than 1.5 m nor greater than 4.5 m in length. Contraction joints shall be constructed by means of 3 mm thick separators and of a section conforming to the cross section of the curb and gutter. Separators shall be removed as soon as practicable after concrete has set sufficiently to preserve the width and shape of the joint and prior to finishing.

3.6.2 Expansion Joints

Expansion joints shall be formed by means of preformed expansion joint filler material cut and shaped to the cross section of curb and gutter. Expansion joints shall be provided in curb and gutter directly opposite expansion joints of abutting portland cement concrete pavement, and shall be of the same type and thickness as joints in the pavement. Where curb and gutter do not abut portland cement concrete pavement, expansion joints at least 10 mm in width shall be provided at intervals not exceeding 20 Expansion joints shall be provided in nonreinforced concrete gutter at locations indicated. Expansion joints shall be sealed immediately following curing of the concrete or as soon thereafter as weather conditions permit.

3.7 CURING AND PROTECTION

3.7.1 General Requirements

Concrete shall be protected against loss of moisture and rapid temperature changes for at least 7 days from the beginning of the curing operation. Unhardened concrete shall be protected from rain and flowing water. All equipment needed for adequate curing and protection of the concrete shall be on hand and ready for use before actual concrete placement begins. Protection shall be provided as necessary to prevent cracking of the pavement due to temperature changes during the curing period.

3.7.1.1 Mat Method

The entire exposed surface shall be covered with 2 or more layers of burlap. Mats shall overlap each other at least 150 mm. The mat shall be thoroughly wetted with water prior to placing on concrete surface and shall be kept continuously in a saturated condition and in intimate contact with concrete for not less than 7 days.

3.7.1.2 Impervious Sheeting Method

The entire exposed surface shall be wetted with a fine spray of water and then covered with impervious sheeting material. Sheets shall be laid directly on the concrete surface with the light-colored side up and overlapped 300 mm when a continuous sheet is not used. The curing medium shall not be less than 450 mm wider than the concrete surface to be cured, and shall be securely weighted down by heavy wood planks, or a bank of moist earth placed along edges and laps in the sheets. Sheets shall be satisfactorily repaired or replaced if torn or otherwise damaged during curing. The curing medium shall remain on the concrete surface to be cured for not less than 7 days.

3.7.1.3 Membrane Curing Method

A uniform coating of white-pigmented membrane-curing compound shall be applied to the entire exposed surface of the concrete as soon after finishing as the free water has disappeared from the finished surface. Formed surfaces shall be coated immediately after the forms are removed and in no case longer than 1 hour after the removal of forms. Concrete shall not be allowed to dry before the application of the membrane. If any drying has occurred, the surface of the concrete shall be moistened with a fine spray of water and the curing compound applied as soon as the free water disappears. Curing compound shall be applied in two coats by hand-operated pressure sprayers at a coverage of approximately 5 square meters per liter for the total of both coats. The second coat shall be applied in a direction approximately at right angles to the direction of application of the first coat. The compound shall form a uniform, continuous, coherent film that will not check, crack, or peel and shall be free from pinholes or other imperfections. If pinholes, abrasion, or other discontinuities exist, an additional coat shall be applied to the affected areas within 30 minutes. Concrete surfaces that are subjected to heavy rainfall within 3 hours after the curing compound has been applied shall be resprayed by the method and at the coverage specified above. Areas where the curing compound is damaged by subsequent construction operations within the curing period shall be resprayed. Necessary precautions shall be taken to insure that the concrete is properly cured at sawed joints, and that no curing compound enters the joints. The top of the joint opening and the joint groove at exposed edges shall be tightly sealed before the concrete in the region of the joint is resprayed with curing compound. The method used for sealing the joint groove shall prevent loss of moisture from the joint during the entire specified curing period. Approved standby facilities for curing concrete pavement shall be provided at a location accessible to the jobsite for use in the event of mechanical failure of the spraying equipment or other conditions that might prevent correct application of the membrane-curing compound at the proper time. Concrete surfaces to which membrane-curing compounds have been applied shall be adequately protected during the entire curing period from pedestrian and vehicular traffic, except as required for joint-sawing operations and surface tests, and from any other possible damage to the continuity of the membrane.

3.7.2 Backfilling

After curing, debris shall be removed and the area adjoining the concrete shall be backfilled, graded, and compacted to conform to the surrounding area in accordance with lines and grades indicated.

3.7.3 Protection

Completed concrete shall be protected from damage until accepted. The

Contractor shall repair damaged concrete and clean concrete discolored during construction. Concrete that is damaged shall be removed and reconstructed for the entire length between regularly scheduled joints. Refinishing the damaged portion will not be acceptable. Removed damaged portions shall be disposed of as directed.

3.7.4 Protective Coating

Protective coating of linseed oil mixture shall be applied to the exposed-to-view concrete surface.

3.7.4.1 Application

Curing and backfilling operation shall be completed prior to applying two coats of protective coating. Concrete shall be surface dry and clean before each application. Coverage shall be by spray application at not more than 11 square meters per liter for first application and not more than for second application, except that the number of applications and coverage for each application for commercially prepared mixture shall be in accordance with the manufacturer's instructions. Coated surfaces shall be protected from vehicular and pedestrian traffic until dry.

3.7.4.2 Precautions

Protective coating shall not be heated by direct application of flame or electrical heaters and shall be protected from exposure to open flame, sparks, and fire adjacent to open containers or applicators. Material shall not be applied at ambient or material temperatures lower than

3.8 FIELD QUALITY CONTROL

3.8.1 General Requirements

The Contractor shall perform the inspection and tests described and meet the specified requirements for inspection details and frequency of testing. Based upon the results of these inspections and tests, the Contractor shall take the action and submit reports as required below, and any additional tests to insure that the requirements of these specifications are met.

3.8.2 Concrete Testing

3.8.2.1 Strength Testing

The Contractor shall provide molded concrete specimens for strength tests. Samples of concrete placed each day shall be taken not less than once a day nor less than once for every 190 cubic meters of concrete. The samples for strength tests shall be taken in accordance with ASTM C 172 and MnDOT 2461. Cylinders for acceptance shall be molded in conformance with ASTM C 31/C 31M by an approved testing laboratory. Each strength test result shall be the average of 2 test cylinders from the same concrete sample tested at 28 days, unless otherwise specified or approved. Concrete specified on the basis of compressive strength will be considered satisfactory if the averages of all sets of three consecutive strength test results equal or exceed the specified strength, and no individual strength test result falls below the specified strength by more than

3.8.2.2 Air Content

Air content shall be determined in accordance with ASTM C 173 or ASTM C 231 and MnDOT 2461. ASTM C 231 shall be used with concretes and mortars made with relatively dense natural aggregates. Two tests for air content shall be made on randomly selected batches of each class of concrete placed during each shift. Additional tests shall be made when excessive variation in concrete workability is reported by the placing foreman or the Government inspector. If results are out of tolerance, the placing foreman shall be notified and he shall take appropriate action to have the air content corrected at the plant. Additional tests for air content will be performed on each truckload of material until such time as the air content is within the tolerance specified.

3.8.2.3 Slump Test

Two slump tests shall be made on randomly selected batches of each class of concrete for every or fraction thereof, of concrete placed during each shift in accordance with MnDOT 2461. Additional tests shall be performed when excessive variation in the workability of the concrete is noted or when excessive crumbling or slumping is noted along the edges of slip-formed concrete.

3.8.3 Thickness Evaluation

The anticipated thickness of the concrete shall be determined prior to placement by passing a template through the formed section or by measuring the depth of opening of the extrusion template of the curb forming machine. If a slip form paver is used for sidewalk placement, the subgrade shall be true to grade prior to concrete placement and the thickness will be determined by measuring each edge of the completed slab.

3.8.4 Surface Evaluation

The finished surface of each category of the completed work shall be uniform in color and free of blemishes and form or tool marks.

3.9 SURFACE DEFICIENCIES AND CORRECTIONS

3.9.1 Thickness Deficiency

When measurements indicate that the completed concrete section is deficient in thickness by more than 6 mm the deficient section will be removed, between regularly scheduled joints, and replaced.

3.9.2 High Areas

In areas not meeting surface smoothness and plan grade requirements, high areas shall be reduced either by rubbing the freshly finished concrete with carborundum brick and water when the concrete is less than 36 hours old or by grinding the hardened concrete with an approved surface grinding machine after the concrete is 36 hours old or more. The area corrected by grinding the surface of the hardened concrete shall not exceed 5 percent of the area of any integral slab, and the depth of grinding shall not exceed Pavement areas requiring grade or surface smoothness corrections in excess of the limits specified above shall be removed and replaced.

3.9.3 Appearance

Exposed surfaces of the finished work will be inspected by the Government and any deficiencies in appearance will be identified. Areas which exhibit

excessive cracking, discoloration, form marks, or tool marks or which are otherwise inconsistent with the overall appearances of the work shall be removed and replaced.

-- End of Section --

SECTION TABLE OF CONTENTS

DIVISION 02 - SITE WORK

SECTION 02811

UNDERGROUND SPRINKLER SYSTEMS

11/90

PART 1 GENERAL

1.1 REFERENCES
1.2 PERFORMANCE REQUIREMENTS
1.3 SUBMITTALS
1.4 DELIVERY AND STORAGE
1.5 FIELD MEASUREMENTS

PART 2 PRODUCTS

2.1 MATERIALS AND EQUIPMENT REQUIREMENTS
2.1.1 Standard Products
2.1.2 Nameplates
2.1.3 Extra Stock
2.2 PIPING MATERIALS
2.2.1 Copper Tubing and Associated Fittings
2.2.2 Red Brass Pipe and Associated Fittings
2.2.3 Galvanized Steel Pipe and Associated Fittings
2.2.4 Polyvinyl Chloride (PVC) Pipe, Fittings and Solvent Cement
2.2.4.1 PVC Pipe
2.2.4.2 PVC Fittings
2.2.4.3 Solvent Cement
2.2.5 Polyethylene (PE) Plastic Piping
2.2.6 Dielectric Fittings
2.2.7 Emitter Hose and Distribution Tubing
2.3 SPRINKLER AND EMITTER HEADS
2.3.1 Pop-Up Spray Heads
2.3.1.1 General Requirements
2.3.1.2 Shrubbery Sprinkler Heads
2.3.2 Rotary Pop-Up Sprinklers
2.3.3 Bubbler Sprinkler Heads
2.3.4 Surface Connected Lawn Sprinkler Heads
2.3.5 Emitter Heads
2.4 VALVES
2.4.1 Gate Valves, Less than
2.4.2 Gate Valves, and Larger
2.4.3 Angle Valves, Less Than .
2.4.4 Angle Valves, and Larger
2.4.5 Quick Coupling Valves
2.4.6 Remote Control Valves, Electrical
2.4.7 Drain Valves
2.4.7.1 Manual Valves
2.4.7.2 Automatic Valves
2.4.8 Not Used
2.4.9 Not Used
2.5 ACCESSORIES AND APPURTENANCES

2.5.1 Valve Keys for Manually Operated Valves
2.5.2 Valve Boxes and Concrete Pads
2.5.2.1 Valve Boxes
2.5.2.2 Concrete Pads
2.5.3 Pressure Gauges
2.5.4 Service Clamps
2.5.5 Not Used
2.5.6 Emitter Head Accessories
2.5.6.1 Strainer
2.5.6.2 Pressure Regulator
2.5.6.3 Riser Adapters
2.5.6.4 Tubing Stakes
2.5.6.5 Emitter Outlet Check Valve (Bug Cap)
2.5.6.6 Access Sleeve
2.5.6.7 Closure Caps
2.6 Not Used
2.7 ELECTRICAL WORK
2.8 CONCRETE MATERIALS
2.9 WATER SUPPLY MAIN MATERIALS
2.10 INSULATING JOINTS

PART 3 EXECUTION

3.1 INSTALLATION
3.1.1 Trenching
3.1.2 Piping System
3.1.2.1 Cover
3.1.2.2 Clearances
3.1.2.3 Minimum Slope
3.1.3 Piping Installation
3.1.3.1 Polyvinyl Chloride (PVC) Pipe
3.1.3.2 Soldered Copper Tubing
3.1.3.3 Threaded Brass or Galvanized Steel Pipe
3.1.3.4 Insulating Joints
3.1.4 Installation of Valves
3.1.4.1 Manual Valves
3.1.4.2 Automatic Valves
3.1.4.3 Drain Valves
3.1.5 Sprinklers and Quick Coupling Valves
3.1.6 Installation of Drip Irrigation System
3.1.6.1 Emitter Hose
3.1.6.2 Emitter Heads
3.1.6.3 Tubing Stakes
3.1.7 Not Used
3.1.8 Control Wire and Conduit
3.1.8.1 Wires
3.1.8.2 Loops
3.1.8.3 Expansion and Contraction
3.1.8.4 Splices
3.1.9 Not Used
3.1.10 Thrust Blocks
3.1.11 Backfill
3.1.11.1 Minimum Cover
3.1.11.2 Restoration
3.1.12 Adjustment
3.1.13 Disinfection
3.1.14 Cleaning of Piping
3.2 FIELD TESTS
3.2.1 Hydrostatic Pressure Test

3.2.2 Leakage Tests
3.2.3 Operation Test
3.3 FRAMED INSTRUCTIONS
3.4 FIELD TRAINING
3.5 CLEANUP

-- End of Section Table of Contents --

SECTION 02811

UNDERGROUND SPRINKLER SYSTEMS

11/90

PART 1 GENERAL

1.1 REFERENCES

The publications listed below form a part of this specification to the extent referenced. The publications are referred to in the text by the basic designation only.

AMERICAN SOCIETY FOR TESTING AND MATERIALS (ASTM)

ASTM A 53	(1997) Pipe, Steel, Black and Hot-Dipped, Zinc-Coated, Welded and Seamless
ASTM B 32	(1996) Solder Metal
ASTM B 43	(1996) Seamless Red Brass Pipe, Standard Sizes
ASTM B 88	(1996) Seamless Copper Water Tube
ASTM D 1785	(1996a) Poly(Vinyl Chloride) (PVC) Plastic Pipe, Schedules 40, 80, and 120
ASTM D 2241	(1996a) Poly(Vinyl Chloride) (PVC) Pressure-Rated Pipe (SDR Series)
ASTM D 2287	(1996) Nonrigid Vinyl Chloride Polymer and Copolymer Molding and Extrusion Compounds
ASTM D 2464	(1996a) Threaded Poly(Vinyl Chloride) (PVC) Plastic Pipe Fittings, Schedule 80
ASTM D 2466	(1996a) Poly(Vinyl Chloride) (PVC) Plastic Pipe Fittings, Schedule 40
ASTM D 2564	(1996a) Solvent Cements for Poly(Vinyl Chloride) (PVC) Plastic Piping Systems
ASTM D 2774	(1994) Underground Installation of Thermoplastic Pressure Piping
ASTM D 2855	(1996) Making Solvent-Cemented Joints with Poly(Vinyl Chloride) (PVC) Pipe and Fittings
ASTM D 3261	(1996) Butt Heat Fusion Polyethylene (PE) Plastic Fittings for Polyethylene (PE) Plastic Pipe and Tubing

ASTM F 441	(1995) Chlorinated Poly(Vinyl Chloride) (CPVC) Plastic Pipe, Schedules 40 and 80

AMERICAN SOCIETY OF MECHANICAL ENGINEERS (ASME)

ASME B1.2	(1983; R 1991; Errata May 1992) Gages and Gaging for Unified Inch Screw Threads
ASME B16.3	(1992) Malleable Iron Threaded Fittings
ASME B16.15	(1985; R 1994) Cast Bronze Threaded Fittings Classes 125 and 250
ASME B16.18	(1984; R 1994) Cast Copper Alloy Solder Joint Pressure Fittings
ASME B16.22	(1995) Wrought Copper and Copper Alloy Solder Joint Pressure Fittings
ASME B40.1	(1991) Gauges - Pressure Indicating Dial Type - Elastic Element

AMERICAN WATER WORKS ASSOCIATION (AWWA)

AWWA C509	(1994) Resilient-Seated Gate Valves for Water Supply Service
AWWA C901	(1996) Polyethylene (PE) Pressure Pipe and Tubing, 1/2 In. Through 3 In., for Water Service

COMMERCIAL ITEM DESCRIPTIONS (CID)

CID A-A-51145	(Rev C) Flux, Soldering, Non-Electronic, Paste & Liquid

MANUFACTURERS STANDARDIZATION SOCIETY OF THE VALVE AND FITTINGS INDUSTRY (MSS)

MSS SP-80	(1997) Bronze Gate, Globe, Angle and Check Valves
MSS SP-85	(1994) Cast Iron Globe & Angle Valves Flanged and Threaded Ends

NATIONAL FIRE PROTECTION ASSOCIATION (NFPA)

NFPA 70	(1996; Errata 96-4) National Electrical Code

1.2 PERFORMANCE REQUIREMENTS

System shall operate with a minimum water pressure of 556 kPa (80 psi) at connection to building and 276 kPa (40 psi) at the last head in each zone.

1.3 SUBMITTALS

Government approval is required for submittals with a "GA" designation; submittals having an "FIO" designation are for information only. The following shall be submitted in accordance with Section 01330 SUBMITTAL PROCEDURES:

SD-02 Shop Drawings

Sprinkler System; G-AE

Detail drawings for valves, sprinkler heads, and emitter heads. Drawings shall include a complete list of equipment and materials, and manufacturer's descriptive and technical literature, performance charts and curves, catalog cuts, and installation instructions. Drawings shall also contain complete wiring and schematic diagrams and any other details required to demonstrate that the system has been coordinated and will function as a unit. Drawings shall show proposed system layout, type and number of heads and emitters, zone valves, and drain pockets. As-built Drawings which provide current factual information showing locations of mains, heads, valves, and controllers including deviations from and amendments to the drawings and changes in the work shall be included.

SD-03 Product Data

Framed Instructions;

Labels, signs, and templates of operating instructions that are required to be mounted or installed on or near the product for normal, safe operation.

Field Training ;

Information describing training to be provided, training aids to be used, samples of training materials to be provided, and schedules and notification of training.

Design Analysis and Calculations; G-AO
Spare Parts;

Design analyses and pressure calculations verifying that system will provide the irrigation requirements. Spare parts data for each different item of material and equipment specified, after approval of the related submittals and not later than the start of the field tests. The data shall include a complete list of parts and supplies, with current unit prices and source of supply.

SD-06 Test Reports

Field Tests;

Performance test reports, in booklet form, showing all field tests performed to adjust each component; and all field tests performed to prove compliance with the specified performance criteria, upon completion and testing of the installed system. Each test report shall indicate the final position of control valves.

SD-07 Certificates

Sprinkler System;

The material supplier's or equipment manufacturer's statement that the supplied material or equipment meets specified requirements. Each certificate shall be signed by an official authorized to certify in behalf of material supplier or product manufacturer and shall identify quantity and date or dates of shipment or delivery to which the certificates apply.

SD-10 Operation and Maintenance Data

Sprinkler System;

Six copies of operation and six copies of maintenance manuals for the equipment furnished. One complete set prior to field testing and the remainder upon acceptance. Manuals shall be approved prior to the field training course. Operating manuals shall detail the step-by-step procedures required for system startup, operation, and shutdown. Operating manuals shall include the manufacturer's name, model number, parts list, and brief description of all equipment and their basic operating features. Maintenance manuals shall list routine maintenance procedures, possible breakdowns and repairs, and troubleshooting guides. Maintenance manuals shall include piping and equipment layout, simplified wiring and control diagrams of the system as installed, and system programming schedule.

1.4 DELIVERY AND STORAGE

All equipment delivered and placed in storage shall be protected from the weather; excessive humidity and temperature variation; direct sunlight (in the case of plastic or rubber materials); and dirt, dust, or other contaminants.

1.5 FIELD MEASUREMENTS

The Contractor shall verify all dimensions in the field and shall advise the Contracting Officer of any discrepancy before performing the work.

PART 2 PRODUCTS

2.1 MATERIALS AND EQUIPMENT REQUIREMENTS

2.1.1 Standard Products

Materials and equipment shall be the standard products of a manufacturer who has produced similar systems which have performed well for a minimum period of 2 years prior to bid opening. Equipment shall be supported by a service organization that is, in the opinion of the Contracting Officer, reasonably convenient to the site.

2.1.2 Nameplates

Each item of equipment shall have the manufacturer's name, address, type or style, model or serial number, and catalog number on a plate secured to the item of equipment.

2.1.3 Extra Stock

The following extra stock shall be provided: Two sprinkler heads of each size and type, two valve keys for operating manual valves, two wrenches for removing and installing each type of head, two quick coupler keys and hose swivels, and four irrigation controller housing keys.

2.2 PIPING MATERIALS

2.2.1 Copper Tubing and Associated Fittings

Tubing shall conform to requirements of ASTM B 88, Type K. Fittings shall conform to ASME B16.22 and ASME B16.18, solder joint. Solder shall conform to ASTM B 32 95-5 tin-antimony. Flux shall conform to CID A-A-51145, Type I.

2.2.2 Red Brass Pipe and Associated Fittings

Pipe shall conform to requirements of ASTM B 43, regular. Fittings shall be Class 250, cast bronze threaded conforming to the requirements of ASME B16.15.

2.2.3 Galvanized Steel Pipe and Associated Fittings

Pipe shall conform to requirements of ASTM A 53, Schedule 40. Fittings shall be Class 150 conforming to requirements of ASME B16.3.

2.2.4 Polyvinyl Chloride (PVC) Pipe, Fittings and Solvent Cement

2.2.4.1 PVC Pipe

Pipe shall conform to the requirements of ASTM D 1785, PVC 1120 Schedule 40; or ASTM D 2241, PVC 1120 SDR 21, Class 200.

2.2.4.2 PVC Fittings

Solvent welded socket type fittings shall conform to requirements of ASTM D 2466, Schedule 40. Threaded type fittings shall conform to requirements of ASTM D 2464, Schedule 80.

2.2.4.3 Solvent Cement

Solvent cement shall conform to the requirements of ASTM D 2564.

2.2.5 Polyethylene (PE) Plastic Piping

Pipe shall conform to AWWA C901, outside diameter base with dimension ratio (DR) of 9.3 to provide minimum pressure rating. Fittings shall conform to ASTM D 3261, DR of 9.3.

2.2.6 Dielectric Fittings

Dielectric fittings shall conform to ASTM F 441, Schedule 80, CPVC threaded pipe nipples, minimum length.

2.2.7 Emitter Hose and Distribution Tubing

Emitter hose and distribution tubing shall conform to ASTM D 2287, maximum inside diameter of minimum wall thickness of plastic extruded from

non-rigid chloride, integrally algae-resistant, homogeneous throughout, smooth inside and outside, free from foreign materials, cracks, serrations, blisters and other effects. Slip fittings shall be provided.

2.3 SPRINKLER AND EMITTER HEADS

2.3.1 Pop-Up Spray Heads

2.3.1.1 General Requirements

Pop-up spray heads lay flush with housing, then pop up when water pressure is activated in system. The rising member supporting the nozzle shall be identical on full, half, third or quarter pattern sprinklers so that nozzles will be interchangeable. The sprinkler head shall be designed to be adjustable for coverage and flow. The nozzle shall be removable so head does not have to be removed for flushing or cleaning. Nozzle rises a minimum of above the body. The body shall be constructed with a female thread for installation in a fixed underground pipe system.

2.3.1.2 Shrubbery Sprinkler Heads

Sprinkler heads shall be conical spray with adjustable or non-adjustable coverage and designed for permanent above ground mounting on riser or pop-ups at a height compatible with ground covers. Provide brass nozzles.

2.3.2 Rotary Pop-Up Sprinklers

Sprinklers shall be capable of covering diameter at with a distribution rate of a 75 mm (3 inch) pop-up, trajectory of 25 degrees, and maximum height of spray of 3.048 m (10 feet). Construction shall be high impact molded plastic with filter screen, reducible watering radius, and choice of eight nozzles and have adjustable radius capabilities.

2.3.3 Bubbler Sprinkler Heads

Heads shall be multiple-spray bubbler with adjustable flow and designed for permanent aboveground mounting on risers.

2.3.4 Surface Connected Lawn Sprinkler Heads

Heads shall be an impulse type with or without sled, ring, or wheel base; multiple T Type; a rotary type with sled, spike or wheel base; or oscillating type with wheel or sled base.

2.3.5 Emitter Heads

Emitter heads shall be self-cleaning, pressure compensating diaphragm with one or six self-piercing barbed outlets; each capable of emitting from flow. Emitter body shall be ultraviolet stabilized, algae, and heat resistant plastic construction.

2.4 VALVES

2.4.1 Gate Valves, Less than

Gate valves shall conform to the requirements of MSS SP-80, Type 1, Class 150, threaded ends.

2.4.2 Gate Valves, and Larger

Gate valves shall conform to the requirements of AWWA C509 and have encapsulated resilient wedge, parallel seats, non-rising stems, and open by counterclockwise turning. End connections shall be flanged. Interior construction of valves shall be bronze including stem containing a maximum 2 percent aluminum and maximum 16 percent zinc.

2.4.3 Angle Valves, Less Than .

Angle valves shall conform to the requirements of MSS SP-80, Type 3, Class 150 threaded ends.

2.4.4 Angle Valves, and Larger

Angle valves shall conform to the requirements of MSS SP-85, Type II, Class 250 flanged ends.

2.4.5 Quick Coupling Valves

Quick coupling valves shall have brass parts and shall be two-piece unit consisting of a coupler water seal valve assembly and a removable upper body to allow spring and key track to be serviced without shutdown of main. Lids shall be lockable vinyl with spring for positive closure on key removal.

2.4.6 Remote Control Valves, Electrical

Remote control valves shall be solenoid actuated globe valves of size, suitable for 24 volts, 60 cycle, and designed to provide for shut-off in event of power failure. Valve shall be cast bronze or brass or plastic housing suitable for service at operating pressure with external flow control adjustment for shut-off capability, external plug at diaphragm chamber to enable manual operation, filter in control chamber to prevent valve body clogging with debris, durable diaphragm, and accessibility to internal parts without removing valve from system.

2.4.7 Drain Valves

2.4.7.1 Manual Valves

Manual valves shall conform to requirements of MSS SP-80, Type 3, Class 150 threaded ends for sizes less than and MSS SP-85, Type II, Class 250 flanged ends for sizes and larger.

2.4.7.2 Automatic Valves

Automatic valves shall be brass or plastic, spring loaded ball drip type, and threaded ends, designed to close at pressure head with positive seal at pressure or greater and be open to drain at less than pressure.

2.4.8 Not Used

2.4.9 Not Used

2.5 ACCESSORIES AND APPURTENANCES

2.5.1 Valve Keys for Manually Operated Valves

Valve keys shall be diameter by long, tee handles and keyed to fit valves.

2.5.2 Valve Boxes and Concrete Pads

2.5.2.1 Valve Boxes

Valve boxes shall be cast iron, plastic lockable, or precast concrete for each gate valve, manual control valve and remote control valve. Box sizes shall be adjustable for valve used. Word "IRRIGATION" shall be cast on cover. Shaft diameter of box shall be minimum 5-1/4 inches. Cast iron box shall have bituminous coating.

2.5.2.2 Concrete Pads

Concrete pads shall be precast or cast-in-place reinforced concrete construction for reduced pressure type backflow preventers.

2.5.3 Pressure Gauges

Pressure gauges shall conform to requirements of ASME B40.1, single style pressure gauge for water with dia brass or aluminum case, bronze tube, gauge cock, pressure snubber, and siphon. Scale range shall be suitable for irrigation sprinkler systems.

2.5.4 Service Clamps

Service clamps shall be bronze flat, double strap, with neoprene gasket or "O"-ring seal.

2.5.5 Not Used

2.5.6 Emitter Head Accessories

2.5.6.1 Strainer

Strainer shall be provided at inlet to each drip line. Strainer shall have stainless steel screen having equivalent of 140-mesh filtration capacity and incorporate flush valves within strainer to clean screen without disassembling unit.

2.5.6.2 Pressure Regulator

Pressure regulator shall be provided at each drip system if supply pressure exceeds

2.5.6.3 Riser Adapters

Riser adapters shall be provided with a rigid piping system.

2.5.6.4 Tubing Stakes

Tubing stakes shall be plastic coated steel, or other non-corrosive strong material to secure tubing.

2.5.6.5 Emitter Outlet Check Valve (Bug Cap)

Check valves shall be provided at end of each emitter outlet distribution line. Valves shall permit free flow of water with minimum restriction; prevent back siphoning, entry of insects, and contamination into outlet ports.

2.5.6.6 Access Sleeve

Access sleeve shall be provided at buried emitters placed in covered boxes. Lids of access sleeve shall be secured with removable lugs. Drip hose in both vertical and horizontal axis shall be secured.

2.5.6.7 Closure Caps

Closure caps shall be in accordance with manufacturer's recommendations.

2.6 Not Used

2.7 ELECTRICAL WORK

Wiring and rigid conduit for electrical power shall be in accordance with NFPA 70, and Section 16375 ELECTRICAL DISTRIBUTION SYSTEM, UNDERGROUND.

2.8 CONCRETE MATERIALS

Concrete shall have a minimum compressive strength of at 28 days as specified in Section 03300, CAST-IN-PLACE STRUCTURAL CONCRETE.

2.9 WATER SUPPLY MAIN MATERIALS

Tapping sleeves, service cut off valves, and connections to water supply mains shall be in accordance with Section 02510 WATER DISTRIBUTION SYSTEM.

2.10 INSULATING JOINTS

Insulating joints and dielectric fittings shall be in accordance with Section 02510 WATER DISTRIBUTION SYSTEM.

PART 3 EXECUTION

3.1 INSTALLATION

Sprinkler system shall be installed after site grading has been completed. Excavation, trenching, and backfilling for sprinkler system shall be in accordance with the applicable provisions of Section 02316, EXCAVATION, TRENCHING, AND BACKFILLING FOR UTILITIES SYSTEMS, except as modified herein.

3.1.1 Trenching

Trench around roots shall be hand excavated to pipe grade when roots of diameter or greater are encountered. Trench width shall be minimum or 1-1/2 times diameter of pipe, whichever is wider. Backfill shall be hand tamped over excavation. When rock is encountered, trench shall be excavated deeper and backfilled with silty sand (SM) or well-graded sand (SW) to pipe grade. Trenches shall be kept free of obstructions and debris that would damage pipe. Subsoil shall not be mixed with topsoil. Existing concrete walks, drives and other obstacles shall be bored at a depth conforming to bottom of adjacent trenches. Pipe sleeves for bored pipe shall be two pipe diameters larger than sprinkler pipe.

3.1.2 Piping System

3.1.2.1 Cover

Underground piping shall be installed to meet the minimum depth of backfill cover specified.

3.1.2.2 Clearances

Minimum horizontal clearances between lines shall be (4 inches) for pipe and less; for pipe and larger. Minimum vertical clearances between lines shall be

3.1.2.3 Minimum Slope

Minimum slope shall be in direction of drain valves.

3.1.3 Piping Installation

3.1.3.1 Polyvinyl Chloride (PVC) Pipe

a. Solvent-cemented joints shall conform to the requirements of ASTM D 2855.

b. Threaded joints shall be full cut with a maximum of three threads remaining exposed on pipe and nipples. Threaded joints shall be made tight without recourse to wicks or fillers, other than polytetrafluoroethylene thread tape.

c. Piping shall be joined to conform with requirements of ASTM D 2774 or ASTM D 2855, and pipe manufacturer's instructions. Pipe shall be installed in a serpentine (snaked) manner to allow for expansion and contraction in trench before backfilling. Pipes shall be installed at temperatures over 40 degrees F.

3.1.3.2 Soldered Copper Tubing

Pipe shall be reamed and burrs removed. Contact surfaces of joint shall be cleaned and polished. Flux shall be applied to male and female ends. End of tube shall be inserted into fittings full depth of socket. After soldering, a solder bead shall show continuously around entire joint circumference. Excess acid flux shall be removed from tubings and fittings.

3.1.3.3 Threaded Brass or Galvanized Steel Pipe

Prior to installation, pipe shall be reamed. Threads shall be cut in conformance with ASME B1.2. Pipe joint compound shall be applied to male end only.

3.1.3.4 Insulating Joints

Insulating and dielectric fittings shall be provided where pipes of dissimilar metal are joined and at connections to water supply mains as shown. Installation shall be in accordance with Section 02510 WATER DISTRIBUTION SYSTEM.

3.1.4 Installation of Valves

3.1.4.1 Manual Valves

Valves shall be installed in a valve box extending from grade to below valve body, with a minimum of cover measured from finish grade to top of valve stem.

3.1.4.2 Automatic Valves

Valve shall be set plumb in a valve box extending from grade to below valve body, with minimum of cover measured from grade to top of valve. Automatic valves shall be installed beside sprinkler heads with a valve box.

3.1.4.3 Drain Valves

Entire system shall be manually or automatically drainable. Low points of system shall be equipped with drain valve draining into an excavation containing gravel. Gravel shall be covered with building paper then backfilled with excavated material and of topsoil.

3.1.5 Sprinklers and Quick Coupling Valves

Sprinklers and valves shall be installed plumb and level with terrain.

3.1.6 Installation of Drip Irrigation System

3.1.6.1 Emitter Hose

Emitter laterals shall be buried deep. Connections shall be solvent welded in accordance with manufacturer's recommendation to standard weight Schedule 40 PVC fittings and bushings. Hose shall be installed in a serpentine manner. When cutting hose, shearing tool such as a pipe cutter, knife, or shears shall be used. Manufacturer's recommended tool and procedures when punching hose for emitters shall be followed.

3.1.6.2 Emitter Heads

Emitters shall be installed in a plastic emitter box. Emitter on a rigid PVC nipple shall be connected to PVC drip lateral with a tee or elbow. Tubing shall be attached to barbed fitting and daylight distribution tubing at root ball secured with stake, with bug cap at end of secured distribution tubing. After installing emitters and before operating system, end of drip lateral shall be opened and flushed clean. The number of emitters on a line shall not exceed manufacturer's recommendations for that hose or distribution tubing size and length.

3.1.6.3 Tubing Stakes

Main irrigation line shall be secured with stakes where line is aboveground. Stakes shall be spaced to ensure that hose does not shift location in presence of foot traffic, operations, gravity on slope installations, or environmental effects. Discharge of the emitter distribution tubing shall be staked to ensure that discharge point of emitter will be maintained at specified position in relation to plant material to be irrigated.

3.1.7 Not Used

3.1.8 Control Wire and Conduit

3.1.8.1 Wires

Low voltage wires may be buried beside pipe in same trench. Rigid conduit shall be provided where wires run under paving. Wires shall be number tagged at key locations along main to facilitate service. One control

circuit shall be provided for each zone and a circuit to control sprinkler system.

3.1.8.2 Loops

A loop of wire shall be provided at each valve where controls are connected.

3.1.8.3 Expansion and Contraction

Multiple tubes or wires shall be bundled and taped together at intervals with loop for expansion and contraction.

3.1.8.4 Splices

Electrical splices shall be waterproof.

3.1.9 Not Used

3.1.10 Thrust Blocks

Concrete shall be placed so that sides subject to thrust or load are against undisturbed earth, and valves and fittings are serviceable after concrete has set. Thrust blocks shall be as specified in Section 02510 WATER DISTRIBUTION SYSTEM.

3.1.11 Backfill

3.1.11.1 Minimum Cover

Depth of cover shall be for pipe or smaller; for pipe; for pipe or larger; for pipes under traffic loads, and freezing temperatures; and for low-voltage wires. Remainder of trench or pipe cover shall be filled to within of top with excavated soil, and compact soil with plate hand-held compactors to same density as undisturbed adjacent soil.

3.1.11.2 Restoration

Top shall be filled with topsoil and compacted with same density as surrounding soil. Lawns and plants shall be restored in accordance with Sections 02922 SODDING, and Section 02930 EXTERIOR PLANTING. Pavements shall be restored in accordance with Section 02770.CONCRETE SIDEWALKS AND CURBS AND GUTTERS.

3.1.12 Adjustment

After grading, seeding, and rolling of planted areas, sprinkler heads shall be adjusted flush with finished grade. Adjustments shall be made by providing new nipples of proper length or by use of heads having an approved device, integral with head, which will permit adjustment in height of head without changing piping.

3.1.13 Disinfection

Sprinkler system fed from a potable water system shall be disinfected upstream of backflow preventer in accordance with Section 02510 WATER DISTRIBUTION SYSTEM.

3.1.14 Cleaning of Piping

Prior to the hydrostatic and operation tests, the interior of the pipe shall be flushed with clean water until pipe is free of all foreign materials. Flushing and cleaning out of system pipe, valves, and components shall not be considered completed until witnessed and accepted by Contracting Officer.

3.2 FIELD TESTS

All instruments, equipment, facilities, and labor required to conduct the tests shall be provided by Contractor.

3.2.1 Hydrostatic Pressure Test

Piping shall be tested hydrostatically before backfilling and proved tight at a hydrostatic pressure of without pumping for a period of one hour with an allowable pressure drop of If hydrostatic pressure cannot be held for a minimum of 4 hours, Contractor shall make adjustments or replacements and the tests repeated until satisfactory results are achieved and accepted by the Contracting Officer.

3.2.2 Leakage Tests

Leakage tests for service main shall be in accordance with Section 02510 WATER DISTRIBUTION SYSTEM.

3.2.3 Operation Test

At conclusion of pressure test, sprinkler heads or emitter heads, quick coupling assemblies, and hose valves shall be installed and entire system tested for operation under normal operating pressure. Operation test consists of the system operating through at least one complete programmed cycle for all areas to be sprinkled.

3.3 FRAMED INSTRUCTIONS

Framed instructions containing wiring and control diagrams under glass or in laminated plastic shall be posted where directed. Condensed operating instructions, prepared in typed form, shall be framed as specified above and posted beside the diagrams. The framed instructions shall be posted before acceptance testing of the system. After as-built drawings are approved by Contracting Officer, controller charts and programming schedule shall be prepared. One chart for each controller shall be supplied. Chart shall be a reduced drawing of actual as-built system that will fit the maximum dimensions inside controller housing. Black line print for chart and a different pastel or transparent color shall indicate each station area of coverage. After chart is completed and approved for final acceptance, chart shall be sealed between two 20 mil pieces of clear plastic.

3.4 FIELD TRAINING

A field training course shall be provided for designated operating and maintenance staff members. Training shall be provided for a total period of eight hours of normal working time and shall start after the system is functionally complete but prior to final acceptance tests. Field training shall cover all of the items contained in the operating and maintenance manuals.

3.5 CLEANUP

Upon completion of installation of system, all debris and surplus materials resulting from the work shall be removed.

-- End of Section --

This page was intentionally left blank for duplex printing.

SECTION TABLE OF CONTENTS

DIVISION 02 - SITE WORK

SECTION 02821

FENCING

04/99

PART 1 GENERAL

1.1 SUBMITTALS

PART 2 PRODUCTS

2.1 Not Used
2.2 GATES AT DUMPSTER ENCLOSURE

PART 3 EXECUTION

3.1 INSTALLATION

-- End of Section Table of Contents --

SECTION 02821

FENCING
04/99

PART 1 GENERAL

1.1 SUBMITTALS

Government approval is required for submittals with a "G" designation; submittals not having a "G" designation are for information only. When used, a designation following the "G" designation identifies the office that will review the submittal for the Government. The following shall be submitted in accordance with Section 01330 SUBMITTAL PROCEDURES:

SD-02 Shop Drawings

Gate; GA1.

Drawings showing, in large scale, gate layout plan, dimensions, profile of fencing infill, installation details, and relationship to adjacent construction.

SD-03 Product Data

GAte; GA1.

Manufacturer's catalog data describing design characteristics and finishes.

PART 2 PRODUCTS

2.1 Not Used

2.2 GATES AT DUMPSTER ENCLOSURE

Gates at dumpster enclosure shall be manually operated, swing gates mounted on steel pipes provided by others, and as shown on the drawings. Gate frames shall be fabricated from aluminum tube sections. Gate fencing infill panels shall be 50 mm (2 inch)deep by 1.5 mm (1/16 inch thick) formed aluminum horizontal louvers, installed at an angle to obscure sight lines. Gate fabric shall be attached to the gate frame by method standard with the manufacturer. Other hardware items shall be furnished as required for the operation of the gate. Latches shall be arranged for padlocking so that the padlock will be accessible from both sides of the gate. Stops shall be provided for holding the gates in the open position. Finish shall be factory applied polyester powder coating. Gate and fencing infill design shall be similar in appearance to "Orsogril Talia Design" by Ametco.

PART 3 EXECUTION

3.1 INSTALLATION

Gate shall be installed according to the maufacturer's recommendations and

as indicated on drawings.

-- End of Section --

This page was intentionally left blank for duplex printing.

SECTION TABLE OF CONTENTS

DIVISION 02 - SITE WORK

SECTION 02921

SEEDING

06/98

PART 1 GENERAL

1.1 REFERENCES
1.2 SUBMITTALS
1.3 SOURCE INSPECTION
1.4 DELIVERY, INSPECTION, STORAGE, AND HANDLING
1.4.1 Delivery
1.4.1.1 Delivered Topsoil
1.4.1.2 Soil Amendments
1.4.1.3 Pesticides
1.4.2 Inspection
1.4.3 Storage
1.4.4 Handling

PART 2 PRODUCTS

2.1 SEED
2.1.1 Seed Classification
2.1.2 Permanent Seed Species and Mixtures
2.1.3 Not Used
2.1.4 Quality
2.1.5 Seed Mixing
2.1.6 Substitutions
2.2 TOPSOIL
2.3 SOIL AMENDMENTS
2.3.1 pH Adjuster
2.3.1.1 Limestone
2.3.1.2 Hydrated Lime
2.3.1.3 Burnt Lime
2.3.2 Fertilizer
2.3.3 Nitrogen Carrier Fertilizer
2.3.4 Organic Material
2.3.4.1 Bonemeal
2.3.4.2 Rotted Manure
2.3.4.3 Decomposed Wood Derivatives
2.3.4.4 Recycled Compost
2.3.4.5 Worm Castings
2.3.5 Soil Conditioner
2.3.5.1 Sand
2.3.5.2 Super Absorbent Polymers
2.3.5.3 Calcined Clay
2.3.5.4 Gypsum
2.3.5.5 Expanded Shale, Clay, or Slate (ESCS)
2.4 MULCH
2.4.1 Straw
2.4.2 Hay

2.4.3 Wood Cellulose Fiber
2.4.4 Paper Fiber
2.5 ASPHALT ADHESIVE
2.6 WATER
2.7 PESTICIDE
2.8 SURFACE EROSION CONTROL MATERIAL
2.8.1 Surface Erosion Control Blanket
2.8.2 Surface Erosion Control Fabric
2.8.3 Surface Erosion Control Net
2.8.4 Surface Erosion Control Chemicals
2.8.5 Hydrophilic Colloids
2.8.6 Erosion Control Material Anchors

PART 3 EXECUTION

3.1 INSTALLING SEED TIME AND CONDITIONS
3.1.1 Seeding Time
3.1.2 Seeding Conditions
3.1.3 Equipment Calibration
3.1.4 Soil Test
3.2 SITE PREPARATION
3.2.1 Finished Grade and Topsoil
3.2.2 Application of Soil Amendments
3.2.2.1 Applying pH Adjuster
3.2.2.2 Applying Fertilizer
3.2.2.3 Applying Soil Conditioner
3.2.2.4 Applying Super Absorbent Polymers
3.2.3 Tillage
3.2.4 Prepared Surface
3.2.4.1 Preparation
3.2.4.2 Lawn Area Debris
3.2.4.3 Field Area Debris
3.2.4.4 Protection
3.3 INSTALLATION
3.3.1 Installing Seed
3.3.1.1 Broadcast Seeding
3.3.1.2 Not Used
3.3.1.3 Rolling
3.3.2 Not Used
3.3.3 Mulching
3.3.3.1 Hay or Straw Mulch
3.3.3.2 Mechanical Anchor
3.3.3.3 Asphalt Adhesive Tackifier
3.3.3.4 Non-Asphaltic Tackifier
3.3.3.5 Asphalt Adhesive Coated Mulch
3.3.3.6 Wood Cellulose Fiber, Paper Fiber, and Recycled Paper
3.3.4 Watering Seed
3.4 SURFACE EROSION CONTROL
3.4.1 Surface Erosion Control Material
3.4.2 Not Used
3.4.2.1 Soil Amendments
3.4.2.2 Remaining Soil Amendments
3.5 QUANTITY CHECK
3.6 APPLICATION OF PESTICIDE
3.6.1 Technical Representative
3.6.2 Application
3.7 RESTORATION AND CLEAN UP
3.7.1 Restoration
3.7.2 Clean Up

3.8 PROTECTION OF INSTALLED AREAS
3.9 SEED ESTABLISHMENT PERIOD
3.9.1 Commencement
3.9.2 Satisfactory Stand of Grass Plants
3.9.2.1 Lawn Area
3.9.2.2 Field Area
3.9.3 Maintenance During Establishment Period
3.9.3.1 Mowing
3.9.3.2 Post-Fertilization
3.9.3.3 Pesticide Treatment
3.9.3.4 Repair or Reinstall
3.9.3.5 Maintenance Record

-- End of Section Table of Contents --

SECTION 02921

SEEDING
06/98

PART 1 GENERAL

1.1 REFERENCES

The publications listed below form a part of this specification to the extent referenced. The publications are referred to in the text by basic designation only.

AGRICULTURAL MARKETING SERVICE (AMS)

AMS-01	(Aug 95) Federal Seed Act Regulations Part 201

AMERICAN SOCIETY FOR TESTING AND MATERIALS (ASTM)

ASTM C 602	(1995a) Agricultural Liming Materials
ASTM D 977	(1991) Emulsified Asphalt
ASTM D 2028	(1976; R 1992) Cutback Asphalt (Rapid-Curing Type)
ASTM D 4972	(1995a) pH of Soils
ASTM D 5268	(1992; R 1996) Topsoil Used for Landscaping Purposes
ASTM D 5883	(1996) Standard Guide for Use of Rotary Kiln Produced Expanded Shale, Clay or Slate (ESCS) as a Mineral Amendment in Topsoil Used for Landscaping and Related Purposes

1.2 SUBMITTALS

Government approval is required for submittals with a "G" designation; submittals not having a "G" designation are for information only. When used, a designation following the "G" designation identifies the office that will review the submittal for the Government. The following shall be submitted in accordance with Section 01330 SUBMITTAL PROCEDURES:

SD-03 Product Data

Equipment;
Surface Erosion Control Material;
Chemical Treatment Material;

Manufacturer's literature including physical characteristics, application and installation instructions for equipment, surface erosion control material and chemical treatment material.

Delivery;

Delivery schedule.

Finished Grade and Topsoil;

Finished grade status.

Topsoil;

Availability of topsoil from the stripping and stock piling operation.

Quantity Check;

Bag count or bulk weight measurements of material used compared with area covered to determine the application rate and quantity installed.

Seed Establishment Period;

Calendar time period for the seed establishment period. When there is more than one seed establishment period, the boundaries of the seeded area covered for each period shall be described.

Maintenance Record; G-AO

Maintenance work performed, area repaired or reinstalled, diagnosis for unsatisfactory stand of grass plants.

Application of Pesticide; G-AO

Pesticide treatment plan with sequence of treatment work with dates and times. The pesticide trade name, EPA registration number, chemical composition, formulation, concentration of original and diluted material, application rate of active ingredients, method of application, area treated, amount applied; and the name and state license number of the state certified applicator shall be included.

SD-04 Samples

Mulch;
A 4.5 kilogram (10 pound) sample.

SD-06 Test Reports

Soil Test; FIO

Certified reports of inspections and laboratory tests, prepared by an independent testing agency, including analysis and interpretation of test results. Each report shall be properly identified. Test methods used and compliance with recognized test standards shall be described.

SD-07 Certificates

Seed;

Topsoil;
pH Adjuster;
Fertilizer;
Organic Material;
Soil Conditioner;
Mulch;

Prior to the delivery of materials, certificates of compliance attesting that materials meet the specified requirements. Certified copies of the material certificates shall include the following:

a. Seed. Classification, botanical name, common name, percent pure live seed, minimum percent germination and hard seed, maximum percent weed seed content, and date tested.

b. Topsoil. Particle size, pH, organic matter content, textural class, soluble salts, chemical and mechanical analyses.

c. pH Adjuster. Calcium carbonate equivalent and sieve analysis.

d. Fertilizer. Chemical analysis and composition percent.

e. Organic Material: Composition and source.

f. Soil Conditioner: Composition and source.

g. Mulch: Composition and source.

1.3 SOURCE INSPECTION

The source of delivered topsoil shall be subject to inspection.

1.4 DELIVERY, INSPECTION, STORAGE, AND HANDLING

1.4.1 Delivery

A delivery schedule shall be provided at least 10 calendar days prior to the first day of delivery.

1.4.1.1 Delivered Topsoil

Prior to the delivery of any topsoil, its availability shall be verified in paragraph TOPSOIL. A soil test shall be provided for topsoil delivered to the site.

1.4.1.2 Soil Amendments

Soil amendments shall be delivered to the site in the original, unopened containers bearing the manufacturer's chemical analysis. In lieu of containers, soil amendments may be furnished in bulk. A chemical analysis shall be provided for bulk deliveries.

1.4.1.3 Pesticides

Pesticide material shall be delivered to the site in the original, unopened containers bearing legible labels indicating the EPA registration number and the manufacturer's registered uses.

1.4.2 Inspection

Seed shall be inspected upon arrival at the job site for conformity to species and quality. Seed that is wet, moldy, or bears a test date five months or older, shall be rejected. Other materials shall be inspected for compliance with specified requirements. The following shall be rejected: open soil amendment containers or wet soil amendments; topsoil that contains slag, cinders, stones, lumps of soil, sticks, roots, trash or other material over a minimum diameter; and topsoil that contains viable plants and plant parts. Unacceptable materials shall be removed from the job site.

1.4.3 Storage

Materials shall be stored in designated areas. Seed, lime, and fertilizer shall be stored in cool, dry locations away from contaminants. Chemical treatment material shall be stored according to manufacturer's instructions and not with seeding operation materials.

1.4.4 Handling

Except for bulk deliveries, materials shall not be dropped or dumped from vehicles.

PART 2 PRODUCTS

2.1 SEED

2.1.1 Seed Classification

State-certified seed of the latest season's crop shall be provided in original sealed packages bearing the producer's guaranteed analysis for percentages of mixture, purity, germination, hard seed, weed seed content, and inert material. Labels shall be in conformance with AMS-01 and applicable state seed laws.

2.1.2 Permanent Seed Species and Mixtures

Permanent seed species and mixtures shall be MN DOT Mix #65A, proportioned by weight as follows:

Botanical Name	Common Name	Mixture Percent by Weight	Percent Pure Live Seed
Poa pratensis	Bluegrass, Elite Kentucky	25.0	85.0
Poa pratensis	Bluegrass, Improved Kentucky	25.0	85.0
Poa pratensis	Bluegrass, L.M. Kentucky	25.0	85.0
Festuca rubra	Red Fescue	15.0	85.0
Lolium perene	Perenial Rye grass	10.0	90.0

2.1.3 Not Used

2.1.4 Quality

Weed seed shall be a maximum 1 percent by weight of the total mixture.

2.1.5 Seed Mixing

The mixing of seed may be done by the seed supplier prior to delivery, or on site as directed.

2.1.6 Substitutions

Substitutions will not be allowed without written request and approval from the Contracting Officer.

2.2 TOPSOIL

Topsoil shall be as defined in ASTM D 5268. When available, the topsoil shall be the existing surface soil stripped and stockpiled onsite in accordance with Section 02300 EARTHWORK. When additional topsoil is required beyond the available topsoil from the stripping operation, topsoil shall be delivered and amended as recommended by the soil test for the seed specified. Topsoil shall be free from slag, cinders, stones, lumps of soil, sticks, roots, trash or other material over a minimum diameter. Topsoil shall be free from viable plants and plant parts.

2.3 SOIL AMENDMENTS

Soil amendments shall consist of pH adjuster, fertilizer, organic material and soil conditioners meeting the following requirements. Vermiculite shall not be used.

2.3.1 pH Adjuster

The pH adjuster shall be an agricultural liming material in accordance with ASTM C 602. These materials may be burnt lime, hydrated lime, ground limestone, sulfur, or shells. The pH adjuster shall be used to create a favorable soil pH for the plant material specified.

2.3.1.1 Limestone

Limestone material shall contain a minimum calcium carbonate equivalent of 80 percent. Gradation: A minimum 95 percent shall pass through a No. 8 sieve and a minimum 55 percent shall pass through a No. 60 sieve. To raise soil pH, ground limestone shall be used.

2.3.1.2 Hydrated Lime

Hydrated lime shall contain a minimum calcium carbonate equivalent of 110 percent. Gradation: A minimum 100 percent shall pass through a sieve and a minimum 97 percent shall pass through a sieve.

2.3.1.3 Burnt Lime

Burnt lime shall contain a minimum calcium carbonate equivalent of 140 percent. Gradation: A minimum 95 percent shall pass through a sieve and a minimum 35 percent shall pass through a sieve.

2.3.2 Fertilizer

It shall be as recommended by the soil test. Fertilizer shall be controlled release commercial grade, free flowing, uniform in composition, and consist of a nitrogen-phosphorus-potassium ratio. The fertilizer shall be derived from sulphur coated urea, urea formaldehyde, plastic or polymer coated pills, or isobutylenediurea (IBDU). Fertilizer shall be balanced with the inclusion of trace minerals and micro-nutrients.

2.3.3 Nitrogen Carrier Fertilizer

It shall be as recommended by the soil test. Nitrogen carrier fertilizer shall be commercial grade, free flowing, and uniform in composition. The fertilizer may be a liquid nitrogen solution.

2.3.4 Organic Material

Organic material shall consist of either bonemeal, rotted manure, decomposed wood derivatives, recycled compost, or worm castings.

2.3.4.1 Bonemeal

Bonemeal shall be finely ground, steamed bone product containing from 2 to 4 percent nitrogen and 16 to 40 percent phosphoric acid.

2.3.4.2 Rotted Manure

Rotted manure shall be unleached horse, chicken or cattle manure containing a maximum 25 percent by volume of straw, sawdust, or other bedding materials. It shall contain no chemicals or ingredients harmful to plants. The manure shall be heat treated to kill weed seeds and be free of stones, sticks, and soil.

2.3.4.3 Decomposed Wood Derivatives

Decomposed wood derivatives shall be ground bark, sawdust, yard trimmings, or other wood waste material that is free of stones, sticks, soil, and toxic substances harmful to plants, and is fully composted or stabilized with nitrogen.

2.3.4.4 Recycled Compost

Compost shall be a well decomposed, stable, weed free organic matter source. Compost shall be derived from food; agricultural or industrial residuals; biosolids (treated sewage sludge); yard trimmings; or source-separated or mixed solid waste. The compost shall possess no objectionable odors and shall not resemble the raw material from which it was derived. The material shall not contain substances toxic to plants. Gradation: The compost material shall pass through a 3/8 inch screen, possess a pH of 5.5 to 8.0, and have a moisture content between 35-55 percent by weight. The material shall not contain more than 1 percent by weight of man-made foreign matter. Compost shall be cleaned of plastic materials larger than in length.

2.3.4.5 Worm Castings

Worm castings shall be screened from worms and food source, and shall be commercially packaged.

2.3.5 Soil Conditioner

Soil conditioner shall be sand, super absorbent polymers, calcined clay, or gypsum for use singly or in combination to meet the requirements of the soil test.

2.3.5.1 Sand

Sand shall be clean and free of toxic materials. Gradation: A minimum 95 percent by weight shall pass a sieve and a minimum 10 percent by weight shall pass a sieve. Greensand shall be balanced with the inclusion of

trace minerals and nutrients.

2.3.5.2 Super Absorbent Polymers

To improve water retention in soils, super absorbent polymers shall be sized and applied according to the manufacturer's recommendations. Polymers shall be added as a soil amendment and be cross-linked polyacrylamide, with an absorption capacity of 250-400 times its weight. Polymers shall also be added to the seed and be a starch grafted polyacrylonitrite, with graphite added as a tacky sticker. It shall have an absorption capacity of 100 plus times its weight.

2.3.5.3 Calcined Clay

Calcined clay shall be granular particles produced from montmorillonite clay calcined to a minimum temperature of Gradation: A minimum 90 percent shall pass a sieve; a minimum 99 percent shall be retained on a sieve; and a maximum 2 percent shall pass a sieve. Bulk density: A maximum .

2.3.5.4 Gypsum

Gypsum shall be commercially packaged, free flowing, and a minimum 95 percent calcium sulfate by volume.

2.3.5.5 Expanded Shale, Clay, or Slate (ESCS)

Rotary kiln produced ESCS material shall be in conformance with ASTM D 5883.

2.4 MULCH

Mulch shall be free from weeds, mold, and other deleterious materials. Mulch materials shall be native to the region.

2.4.1 Straw

Straw shall be stalks from oats, wheat, rye, barley, or rice, furnished in air-dry condition and with a consistency for placing with commercial mulch-blowing equipment.

2.4.2 Hay

Hay shall be native hay, sudan-grass hay, broomsedge hay, or other herbaceous mowings, furnished in an air-dry condition suitable for placing with commercial mulch-blowing equipment.

2.4.3 Wood Cellulose Fiber

Wood cellulose fiber shall not contain any growth or germination-inhibiting factors and shall be dyed an appropriate color to facilitate placement during application. Composition on air-dry weight basis: 9 to 15 percent moisture, pH range from 4.5 to 6.0.

2.4.4 Paper Fiber

Paper fiber mulch shall be recycled news print that is shredded for the purpose of mulching seed.

2.5 ASPHALT ADHESIVE

Asphalt adhesive shall conform to the following: Emulsified asphalt, conforming to ASTM D 977, Grade SS-1; and cutback asphalt, conforming to ASTM D 2028, Designation RC-70.

2.6 WATER

Water shall be the responsibility of the Contractor, unless otherwise noted. Water shall not contain elements toxic to plant life.

2.7 PESTICIDE

Pesticide shall be insecticide, herbicide, fungicide, nematocide, rodenticide or miticide. For the purpose of this specification, a soil fumigant shall have the same requirements as a pesticide. The pesticide material shall be EPA registered and approved.

2.8 SURFACE EROSION CONTROL MATERIAL

Surface erosion control material shall conform to the following:

2.8.1 Surface Erosion Control Blanket

Blanket shall be machine produced mat of wood excelsior formed from a web of interlocking wood fibers; covered on one side with either knitted straw blanket-like mat construction; covered with biodegradable plastic mesh; or interwoven biodegradable thread, plastic netting, or twisted kraft paper cord netting.

2.8.2 Surface Erosion Control Fabric

Fabric shall be knitted construction of polypropylene yarn with uniform mesh openings square with strips of biodegradable paper. Filler paper strips shall have a minimum life of 6 months.

2.8.3 Surface Erosion Control Net

Net shall be heavy, twisted jute mesh, weighing approximately and wide with mesh openings of approximately square.

2.8.4 Surface Erosion Control Chemicals

Chemicals shall be high-polymer synthetic resin or cold-water emulsion of selected petroleum resins.

2.8.5 Hydrophilic Colloids

Hydrophilic colloids shall be physiologically harmless to plant and animal life without phytotoxic agents. Colloids shall be naturally occurring, silicate powder based, and shall form a water insoluble membrane after curing. Colloids shall resist mold growth.

2.8.6 Erosion Control Material Anchors

Erosion control anchors shall be as recommended by the manufacturer.

PART 3 EXECUTION

3.1 INSTALLING SEED TIME AND CONDITIONS

3.1.1 Seeding Time

Seed shall be installed from April 1 to June 1 for spring establishment; from July 20 to September 20 for summer establishment; and from October 20 to November 1 for fall establishment.

3.1.2 Seeding Conditions

Seeding operations shall be performed only during periods when beneficial results can be obtained. When drought, excessive moisture, or other unsatisfactory conditions prevail, the work shall be stopped when directed. When special conditions warrant a variance to the seeding operations, proposed alternate times shall be submitted for approval.

3.1.3 Equipment Calibration

Immediately prior to the commencement of seeding operations, calibration tests shall be conducted on the equipment to be used. These tests shall confirm that the equipment is operating within the manufacturer's specifications and will meet the specified criteria. The equipment shall be calibrated a minimum of once every day during the operation. The calibration test results shall be provided within 1 week of testing.

3.1.4 Soil Test

Delivered topsoil, existing soil in smooth graded areas, and stockpiled topsoil shall be tested in accordance with ASTM D 5268 and ASTM D 4972 for determining the particle size, pH, organic matter content, textural class, chemical analysis, soluble salts analysis, and mechanical analysis. Sample collection on site shall be random over the entire site. Sample collection for stockpiled topsoil shall be at different levels in the stockpile. The soil shall be free from debris, noxious weeds, toxic substances, or other materials harmful to plant growth. The test shall determine the quantities and type of soil amendments required to meet local growing conditions for the seed species specified.

3.2 SITE PREPARATION

3.2.1 Finished Grade and Topsoil

The Contractor shall verify that finished grades are as indicated on drawings, and the placing of topsoil, smooth grading, and compaction requirements have been completed in accordance with Section 02300 EARTHWORK, prior to the commencement of the seeding operation.

3.2.2 Application of Soil Amendments

3.2.2.1 Applying pH Adjuster

The pH adjuster shall be applied as recommended by the soil test. The pH adjuster shall be incorporated into the soil to a maximum depth or may be incorporated as part of the tillage operation.

3.2.2.2 Applying Fertilizer

The fertilizer shall be applied as recommended by the soil test. Fertilizer shall be incorporated into the soil to a maximum depth or may be incorporated as part of the tillage or hydroseeding operation.

3.2.2.3 Applying Soil Conditioner

The soil conditioner shall be as recommended by the soil test. The soil conditioner shall be spread uniformly over the soil a minimum depth and thoroughly incorporated by tillage into the soil to a maximum depth.

3.2.2.4 Applying Super Absorbent Polymers

Polymers shall be spread uniformly over the soil as recommended by the manufacturer and thoroughly incorporated by tillage into the soil to a maximum depth.

3.2.3 Tillage

Soil on slopes up to a maximum 3-horizontal-to-1-vertical shall be tilled to a minimum depth. On slopes between 3-horizontal-to-1-vertical and 1-horizontal-to-1 vertical, the soil shall be tilled to a minimum depth by scarifying with heavy rakes, or other method. Rototillers shall be used where soil conditions and length of slope permit. On slopes 1-horizontal-to-1 vertical and steeper, no tillage is required. Drainage patterns shall be maintained as indicated on drawings. Areas compacted by construction operations shall be completely pulverized by tillage. Soil used for repair of surface erosion or grade deficiencies shall conform to topsoil requirements. The pH adjuster, fertilizer, and soil conditioner may be applied during this procedure.

3.2.4 Prepared Surface

3.2.4.1 Preparation

The prepared surface shall be a maximum below the adjoining grade of any surfaced area. New surfaces shall be blended to existing areas. The prepared surface shall be completed with a light raking to remove debris.

3.2.4.2 Lawn Area Debris

Debris and stones over a minimum in any dimension shall be removed from the surface.

3.2.4.3 Field Area Debris

Debris and stones over a minimum in any dimension shall be removed from the surface.

3.2.4.4 Protection

Areas with the prepared surface shall be protected from compaction or damage by vehicular or pedestrian traffic and surface erosion.

3.3 INSTALLATION

Prior to installing seed, any previously prepared surface compacted or damaged shall be reworked to meet the requirements of paragraph SITE PREPARATION. Seeding operations shall not take place when the wind velocity will prevent uniform seed distribution.

3.3.1 Installing Seed

Seeding method shall be Broadcast Seeding. Seeding procedure shall ensure

even coverage. Gravity feed applicators, which drop seed directly from a hopper onto the prepared soil, shall not be used because of the difficulty in achieving even coverage, unless otherwise approved. Absorbent polymer powder shall be mixed with the dry seed at the rate recommended by the manufacturer.

3.3.1.1 Broadcast Seeding

Seed shall be uniformly broadcast at the rate of 100 using broadcast seeders. Half the total rate of seed application shall be broadcast in 1 direction, with the remainder of the seed rate broadcast at 90 degrees from the first direction. Seed shall be covered a maximum depth by disk harrow, steel mat drag, cultipacker, or other approved device.

3.3.1.2 Not Used

3.3.1.3 Rolling

The entire area shall be firmed with a roller not exceeding 90 pounds per foot roller width. Slopes over a maximum 3-horizontal-to-1 vertical shall not be rolled. Areas seeded with seed drills equipped with rollers shall not be rolled.

3.3.2 Not Used

3.3.3 Mulching

3.3.3.1 Hay or Straw Mulch

Hay or straw mulch shall be spread uniformly at the rate of . Mulch shall be spread by hand, blower-type mulch spreader, or other approved method. Mulching shall be started on the windward side of relatively flat areas or on the upper part of steep slopes, and continued uniformly until the area is covered. The mulch shall not be bunched or clumped. Sunlight shall not be completely excluded from penetrating to the ground surface. All areas installed with seed shall be mulched on the same day as the seeding. Mulch shall be anchored immediately following spreading.

3.3.3.2 Mechanical Anchor

Mechanical anchor shall be a V-type-wheel land packer; a scalloped-disk land packer designed to force mulch into the soil surface; or other suitable equipment.

3.3.3.3 Asphalt Adhesive Tackifier

Asphalt adhesive tackifier shall be sprayed at a rate between . Sunlight shall not be completely excluded from penetrating to the ground surface.

3.3.3.4 Non-Asphaltic Tackifier

Hydrophilic colloid shall be applied at the rate recommended by the manufacturer, using hydraulic equipment suitable for thoroughly mixing with water. A uniform mixture shall be applied over the area.

3.3.3.5 Asphalt Adhesive Coated Mulch

Hay or straw mulch may be spread simultaneously with asphalt adhesive applied at a rate between , using power mulch equipment which shall be

equipped with suitable asphalt pump and nozzle. The adhesive-coated mulch shall be applied evenly over the surface. Sunlight shall not be completely excluded from penetrating to the ground surface.

3.3.3.6 Wood Cellulose Fiber, Paper Fiber, and Recycled Paper

Wood cellulose fiber, paper fiber, or recycled paper shall be applied as part of the hydroseeding operation. The mulch shall be mixed and applied in accordance with the manufacturer's recommendations.

3.3.4 Watering Seed

Watering shall be started immediately after completing the seeding of an area. Water shall be applied to supplement rainfall at a rate sufficient to ensure moist soil conditions to a minimum (1 inch) depth. Run-off and puddling shall be prevented. Watering trucks shall not be driven over turf areas, unless otherwise directed. Watering of other adjacent areas or plant material shall be prevented.

3.4 SURFACE EROSION CONTROL

3.4.1 Surface Erosion Control Material

Where indicated or as directed, surface erosion control material shall be installed in accordance with manufacturer's instructions. Placement of the material shall be accomplished without damage to installed material or without deviation to finished grade.

3.4.2 Not Used

3.4.2.1 Soil Amendments

When soil amendments have not been applied to the area, the quantity of 1/2 of the required soil amendments shall be applied and the area tilled in accordance with paragraph SITE PREPARATION. The area shall be watered in accordance with paragraph Watering Seed.

3.4.2.2 Remaining Soil Amendments

The remaining soil amendments shall be applied in accordance with the paragraph Tillage when the surface is prepared for installing seed.

3.5 QUANTITY CHECK

For materials provided in bags, the empty bags shall be retained for recording the amount used. For materials provided in bulk, the weight certificates shall be retained as a record of the amount used. The amount of material used shall be compared with the total area covered to determine the rate of application used. Differences between the quantity applied and the quantity specified shall be adjusted as directed.

3.6 APPLICATION OF PESTICIDE

When application of a pesticide becomes necessary to remove a pest or disease, a pesticide treatment plan shall be submitted and coordinated with the installation pest management program.

3.6.1 Technical Representative

The certified installation pest management coordinator shall be the technical representative, and shall be present at all meetings concerning treatment measures for pest or disease control. They may be present during treatment application.

3.6.2 Application

A state certified applicator shall apply required pesticides in accordance with EPA label restrictions and recommendations. Clothing and personal protective equipment shall be used as specified on the pesticide label. A closed system is recommended as it prevents the pesticide from coming into contact with the applicator or other persons. Water for formulating shall only come from designated locations. Filling hoses shall be fitted with a backflow preventer meeting local plumbing codes or standards. Overflow shall be prevented during the filling operation. Prior to each day of use, the equipment used for applying pesticide shall be inspected for leaks, clogging, wear, or damage. Any repairs are to be performed immediately. A pesticide plan shall be submitted.

3.7 RESTORATION AND CLEAN UP

3.7.1 Restoration

Existing turf areas, pavements, and facilities that have been damaged from the seeding operation shall be restored to original condition at Contractor's expense.

3.7.2 Clean Up

Excess and waste material shall be removed from the seeded areas and shall be disposed offsite. Adjacent paved areas shall be cleaned.

3.8 PROTECTION OF INSTALLED AREAS

Immediately upon completion of the seeding operation in an area, the area shall be protected against traffic or other use by erecting barricades and providing signage as required, or as directed.

3.9 SEED ESTABLISHMENT PERIOD

3.9.1 Commencement

The seed establishment period to obtain a healthy stand of grass plants shall begin on the first day of work under this contract and shall end 3 months after the last day of the seeding operation. Written calendar time period shall be furnished for the seed establishment period. When there is more than 1 seed establishment period, the boundaries of the seeded area covered for each period shall be described. The seed establishment period shall be coordinated with Sections 02922 SODDING,and 02930 EXTERIOR PLANTING. The seed establishment period shall be modified for inclement weather, shut down periods, or for separate completion dates of areas.

3.9.2 Satisfactory Stand of Grass Plants

Grass plants shall be evaluated for species and health when the grass plants are a minimum high.

3.9.2.1 Lawn Area

A satisfactory stand of grass plants from the seeding operation for a lawn area shall be a minimum 20 grass plants per square foot. Bare spots shall be a maximum square. The total bare spots shall be a maximum 2 percent of the total seeded area.

3.9.2.2 Field Area

A satisfactory stand of grass plants from the seeding operation for a field area shall be a minimum 10 grass plants per square foot. The total bare spots shall not exceed 2 percent of the total seeded area.

3.9.3 Maintenance During Establishment Period

Maintenance of the seeded areas shall include eradicating weeds, insects and diseases; protecting embankments and ditches from surface erosion; maintaining erosion control materials and mulch; protecting installed areas from traffic; mowing; watering; and post-fertilization.

3.9.3.1 Mowing

a. Lawn Areas: Lawn areas shall be mowed to a minimum 3 inch height when the turf is a maximum 4 inches high. Clippings shall be removed when the amount cut prevents sunlight from reaching the ground surface.

b. Field Areas: Field areas shall be mowed once during the season to a minimum height. Clippings shall be removed when the amount cut prevents sunlight from reaching the ground surface.

3.9.3.2 Post-Fertilization

The fertilizer shall be applied as recommended by the soil test. A maximum of actual available nitrogen shall be provided to the grass plants. The application shall be timed prior to the advent of winter dormancy and shall be made without burning the installed grass plants.

3.9.3.3 Pesticide Treatment

Treatment for disease or pest shall be in accordance with paragraph APPLICATION OF PESTICIDE.

3.9.3.4 Repair or Reinstall

Unsatisfactory stand of grass plants and mulch shall be repaired or reinstalled, and eroded areas shall be repaired in accordance with paragraph SITE PREPARATION.

3.9.3.5 Maintenance Record

A record of each site visit shall be furnished, describing the maintenance work performed; areas repaired or reinstalled; and diagnosis for unsatisfactory stand of grass plants.

-- End of Section --

This page was intentionally left blank for duplex printing.

SECTION TABLE OF CONTENTS

DIVISION 02 - SITE WORK

SECTION 02922

SODDING

06/98

PART 1 GENERAL

1.1 REFERENCES
1.2 SUBMITTALS
1.3 SOURCE INSPECTION
1.4 DELIVERY, INSPECTION, STORAGE, AND HANDLING
1.4.1 Delivery
1.4.1.1 Sod
1.4.1.2 Delivered Topsoil
1.4.1.3 Soil Amendments
1.4.1.4 Pesticides
1.4.2 Inspection
1.4.3 Storage
1.4.3.1 Sod
1.4.3.2 Other Material Storage
1.4.4 Handling
1.4.5 Time Limitation

PART 2 PRODUCTS

2.1 SOD
2.1.1 Sod Classification
2.1.2 Grass Species
2.1.3 Quality
2.1.4 Thickness
2.1.5 Anchors
2.1.6 Substitutions
2.2 TOPSOIL
2.3 SOIL AMENDMENTS
2.3.1 pH Adjuster
2.3.1.1 Limestone
2.3.1.2 Hydrated Lime
2.3.1.3 Burnt Lime
2.3.2 Fertilizer
2.3.3 Nitrogen Carrier Fertilizer
2.3.4 Organic Material
2.3.4.1 Bonemeal
2.3.4.2 Rotted Manure
2.3.4.3 Decomposed Wood Derivatives
2.3.4.4 Recycled Compost
2.3.4.5 Worm Castings
2.3.5 Soil Conditioner
2.3.5.1 Sand
2.3.5.2 Super Absorbent Polymers
2.3.5.3 Calcined Clay
2.3.5.4 Gypsum

2.3.5.5 Expanded Shale, Clay, or Slate (ESCS)
2.4 WATER
2.5 PESTICIDE

PART 3 EXECUTION

3.1 INSTALLING SOD TIME AND CONDITIONS
3.1.1 Sodding Time
3.1.2 Sodding Conditions
3.1.3 Equipment Calibration
3.1.4 Topsoil Requirements and Testing
3.2 SITE PREPARATION
3.2.1 Finished Grade and Topsoil
3.2.2 Application of Soil Amendments
3.2.2.1 Applying pH Adjuster
3.2.2.2 Applying Fertilizer
3.2.2.3 Applying Soil Conditioner
3.2.2.4 Applying Super Absorbent Polymers
3.2.3 Tillage
3.2.4 Prepared Surface
3.2.4.1 Preparation
3.2.4.2 Protection
3.3 INSTALLATION
3.3.1 Installing Sod
3.3.2 Finishing
3.3.3 Rolling
3.3.4 Watering Sod
3.4 TEMPORARY SEEDING
3.5 QUANTITY CHECK
3.6 APPLICATION OF PESTICIDE
3.6.1 Technical Representative
3.6.2 Application
3.7 RESTORATION AND CLEAN UP
3.7.1 Restoration
3.7.2 Clean Up
3.8 PROTECTION OF INSTALLED AREAS
3.9 SOD ESTABLISHMENT PERIOD
3.9.1 Commencement
3.9.2 Satisfactory Stand of Grass Plants
3.9.3 Maintenance During Establishment Period
3.9.3.1 Mowing
3.9.3.2 Post-Fertilization
3.9.3.3 Pesticide Treatment
3.9.3.4 Repair
3.9.3.5 Maintenance Record

-- End of Section Table of Contents --

SECTION 02922

SODDING
06/98

PART 1 GENERAL

1.1 REFERENCES

AMERICAN SOCIETY FOR TESTING AND MATERIALS (ASTM)

ASTM C 602	(1995a) Agricultural Liming Materials
ASTM D 4972	(1995a) pH of Soils
ASTM D 5268	(1992; R 1996) Topsoil Used for Landscaping Purposes
ASTM D 5883	(1996) Standard Guide for Use of Rotary Kiln Produced Expanded Shale, Clay or Slate (ESCS) as a Mineral Amendment in Topsoil Used for Landscaping and Related Purposes

1.2 SUBMITTALS

Government approval is required for submittals with a "G" designation; submittals not having a "G" designation are for information only. When used, a designation following the "G" designation identifies the office that will review the submittal for the Government. The following shall be submitted in accordance with Section 01330 SUBMITTAL PROCEDURES:

SD-03 Product Data

Finished Grade and Topsoil;

Finished grade status.

Topsoil;

Availability of topsoil from the stripping and stock piling operation.

Quantity Check;

Bag count or bulk weight measurements of material used compared with area covered to determine the application rate and quantity installed. The quantity of sod used shall be compared against the total area installed.

Sod Establishment Period;

Calendar time period for the sod establishment period. When there is more than one sod establishment period, the boundaries of the sodded area covered for each period shall be described.

Maintenance Record;

Maintenance work performed, area repaired or reinstalled, diagnosis for unsatisfactory stand of grass plants.

Application of Pesticide;

Pesticide treatment plan with sequence of treatment work with dates and times. The pesticide trade name, EPA registration number, chemical composition, formulation, concentration of original and diluted material, application rate of active ingredients, method of application, area treated, amount applied; and the name and state license number of the state certified applicator shall be included.

SD-06 Test Reports

Soil Test; G-AO

Certified reports of inspections and laboratory tests, prepared by an independent testing agency, including analysis and interpretation of test results. Each report shall be properly identified. Test methods used and compliance with recognized test standards shall be described.

SD-07 Certificates

Sod;
Topsoil;
pH Adjuster;
Fertilizer;
Organic Material;
Soil Conditioner;
Pesticide;

Prior to the delivery of materials, certificates of compliance attesting that materials meet the specified requirements. Certified copies of the material certificates shall include the following:

a. Sod. Classification, botanical name, common name, mixture percentage of species, percent purity, quality grade, field location and state certification.

b. Topsoil. Particle size, pH, organic matter content, textural class, soluble salts, chemical and mechanical analyses.

c. pH Adjuster. Calcium carbonate equivalent and sieve analysis.

d. Fertilizer. Chemical analysis and composition percent.

e. Organic Material: Composition and source.

f. Soil Conditioner: Composition and source.

g. Pesticide. EPA registration number and registered uses.

1.3 SOURCE INSPECTION

The sources of sod material and delivered topsoil shall be subject to inspection.

1.4 DELIVERY, INSPECTION, STORAGE, AND HANDLING

1.4.1 Delivery

A delivery schedule shall be provided at least 10 calendar days prior to the first day of delivery.

1.4.1.1 Sod

Sod shall be protected during delivery to prevent desiccation, internal heat buildup, or contamination.

1.4.1.2 Delivered Topsoil

Prior to the delivery of any topsoil, its availability shall be verified in paragraph TOPSOIL. A soil test shall be provided for topsoil delivered to the site.

1.4.1.3 Soil Amendments

Soil amendments shall be delivered to the site in the original, unopened containers bearing the manufacturer's chemical analysis. In lieu of containers, soil amendments may be furnished in bulk. A chemical analysis shall be provided for bulk deliveries.

1.4.1.4 Pesticides

Pesticide material shall be delivered to the site in the original, unopened containers bearing legible labels indicating the EPA registration number and the manufacturer's registered uses.

1.4.2 Inspection

Sod shall be inspected upon arrival at the job site for conformity to species. Sod shall be checked for visible broadleaf weeds, and a visible consistency with no obvious patches of foreign grasses that exceed 2 percent of the canopy. Sod that is heating up, dry, moldy, yellow, irregularly shaped, torn, or of uneven thickness shall be rejected. Other materials shall be inspected for compliance with specified requirements. Open soil amendment containers or wet soil amendments; topsoil that contains slag, cinders, stones, lumps of soil, sticks, roots, trash or other material over a minimum 1-1/2 inch diameter; and topsoil that contains viable plants and plant parts, shall be rejected. Unacceptable materials shall be removed from the job site.

1.4.3 Storage

1.4.3.1 Sod

Sod shall be stored in designated areas and kept in a moist condition by watering with a fine mist, and covered with moist burlap, straw, or other covering. Covering shall allow air to circulate, preventing internal heat from building up. Sod shall be protected from exposure to wind and direct sunlight until installed.

1.4.3.2 Other Material Storage

Materials shall be stored in designated areas. Lime and fertilizer shall be stored in cool, dry locations, away from contaminants. Chemical treatment material shall be stored according to manufacturer's instructions and not with sod operation materials.

1.4.4 Handling

Sod shall not be damaged during handling. Except for bulk deliveries, materials shall not be dropped or dumped from vehicles.

1.4.5 Time Limitation

Time limitation between harvesting and installing sod shall be a maximum 36 hours.

PART 2 PRODUCTS

2.1 SOD

2.1.1 Sod Classification

State-certified sod shall be provided as classified by applicable state laws. Sod section shall be sized to permit rolling and lifting without breaking.

2.1.2 Grass Species

Grass species shall be proportioned as follows:

Botanical Name	Common Name	Mixture Percent
Poa Pratensis	Kentucky Bluegrass	100%

2.1.3 Quality

Sod shall be relatively free of thatch, diseases, nematodes, soil-borne insects, weeds or undesirable plants, stones larger than 1 inch in diameter, woody plant roots, and other materials detrimental to a healthy stand of grass plants. Broadleaf weeds and patches of foreign grasses shall be a maximum 2 percent of the sod section.

2.1.4 Thickness

Sod shall be machine cut to a minimum 1-3/8 inch thickness. Measurement for thickness shall exclude top growth and thatch.

2.1.5 Anchors

Sod anchors shall be as recommended by the sod supplier.

2.1.6 Substitutions

Substitutions will not be allowed without written request and approval from the Contracting Officer.

2.2 TOPSOIL

Topsoil shall be as defined in ASTM D 5268. When available, the topsoil shall be the existing surface soil stripped and stockpiled onsite in accordance with Section 02300 EARTHWORK. When additional topsoil is required beyond the available topsoil from stripping operation, topsoil shall be delivered and amended as recommended by the soil test for the sod species specified. Topsoil shall be free from slag, cinders, stones, lumps of soil, sticks, roots, trash, or other material over a maximum 1-1/2 inch diameter. Topsoil shall be free from viable plants and plant parts.

2.3 SOIL AMENDMENTS

Soil amendments shall consist of pH adjuster, fertilizer, organic material, and soil conditioners meeting the following requirements. Vermiculite shall not be used.

2.3.1 pH Adjuster

The pH adjuster shall be an agricultural liming material in accordance with ASTM C 602. These materials may be burnt lime, hydrated lime, ground limestone, or shells. The pH adjuster shall be used to create a favorable soil pH for the plant material specified.

2.3.1.1 Limestone

Limestone material shall contain a minimum calcium carbonate equivalent of 80 percent. Gradation: A minimum 95 percent shall pass through a No. 8 sieve and a minimum 55 percent shall pass through a No. 60 sieve. To raise soil pH, ground limestone shall be used.

2.3.1.2 Hydrated Lime

Hydrated lime shall contain a minimum calcium carbonate equivalent of 110 percent. Gradation: A minimum 100 percent shall pass through a No. 8 sieve and a minimum 97 percent shall pass through a No. 60 sieve.

2.3.1.3 Burnt Lime

Burnt lime shall contain a minimum calcium carbonate equivalent of 140 percent. Gradation: A minimum 95 percent shall pass through a No. 8 sieve and a minimum 35 percent shall pass through a No. 60 sieve.

2.3.2 Fertilizer

It shall be as recommended by the soil test. Fertilizer shall be controlled release commercial grade, free flowing, uniform in composition, and consist of a nitrogen-phosphorus-potassium ratio. The fertilizer shall be derived from sulphur coated urea, urea formaldehyde, plastic or polymer coated pills, or isobutylenediurea (IBDU). Fertilizer shall be balanced with the inclusion of trace minerals and micro-nutrients.

2.3.3 Nitrogen Carrier Fertilizer

It shall be as recommended by the soil test Nitrogen carrier fertilizer shall be commercial grade, free flowing, and uniform in composition. The fertilizer may be a liquid nitrogen solution.

2.3.4 Organic Material

Organic material shall consist of either bonemeal, rotted manure, decomposed wood derivatives, recycled compost, or worm castings.

2.3.4.1 Bonemeal

Bonemeal shall be finely ground, steamed bone product containing from 2 to 4 percent nitrogen and 16 to 40 percent phosphoric acid.

2.3.4.2 Rotted Manure

Rotted manure shall be unleached horse, chicken or cattle manure containing a maximum 25 percent by volume straw, sawdust, or other bedding materials. Manure shall contain no chemicals or ingredients harmful to plants. The manure shall be heat treated to kill weed seeds and be free of stones, sticks, and soil.

2.3.4.3 Decomposed Wood Derivatives

Decomposed wood derivatives shall be ground bark, sawdust, yard trimmings, or other wood waste material free of stones, sticks, soil, and toxic substances harmful to plants, fully composted or stabilized with nitrogen.

2.3.4.4 Recycled Compost

Compost shall be a well decomposed, stable, weed free organic matter source. Compost shall be derived from food; agricultural or industrial residuals; biosolids (treated sewage sludge); yard trimmings; or source-separated or mixed solid waste. The compost shall possess no objectionable odors and shall not resemble the raw material from which it was derived. The material shall not contain substances toxic to plants. Gradation: The compost material shall pass through a 3/8 inch screen, possess a pH of 5.5 to 8.0, and have a moisture content between 35-55 percent by weight. The material shall not contain more than 1 percent or less by weight of man-made foreign matter. Compost shall be cleaned of plastic materials larger than 2 inches in length.

2.3.4.5 Worm Castings

Worm castings shall be screened from worms and food source, and shall be commercially packaged.

2.3.5 Soil Conditioner

Soil conditioner shall be sand, super absorbent polymers, calcined clay, or gypsum for use singly or in combination to meet the requirements for topsoil.

2.3.5.1 Sand

Sand shall be clean and free of toxic materials. Gradation: A minimum 95 percent by weight shall pass a No. 10 sieve and a minimum 10 percent by weight shall pass a No. 16 sieve. Greensand shall be balanced with the inclusion of trace minerals and nutrients.

2.3.5.2 Super Absorbent Polymers

To improve water retention in soils, super absorbent polymers shall be sized and applied according to the manufacturer's recommendations. Polymers shall be added as a soil amendment and be cross-linked

polyacrylamide with an absorption capacity of 250-400 times its weight.

2.3.5.3 Calcined Clay

Calcined clay shall be granular particles produced from montmorillonite clay calcined to minimum temperature of 1200 degrees F. Gradation: A minimum 90 percent passing No. 8 sieve; a minimum 99 percent shall be retained on a No. 60 sieve; and a maximum 2 percent shall pass a No. 100 sieve. Bulk density: A maximum 40 pounds per cubic foot.

2.3.5.4 Gypsum

Gypsum shall be commercially packaged, free flowing, and a minimum 95 percent calcium sulfate by volume.

2.3.5.5 Expanded Shale, Clay, or Slate (ESCS)

Rotary kiln produced ESCS material shall be in conformance with ASTM D 5883.

2.4 WATER

Water shall be the responsibility of the Contractor unless otherwise noted. Water shall not contain elements toxic to plant life.

2.5 PESTICIDE

Pesticide shall be insecticide, herbicide, fungicide, nematocide, rodenticide or miticide. For the purpose of this specification, a soil fumigant shall have the same requirements as a pesticide. The pesticide material shall be EPA registered and approved.

PART 3 EXECUTION

3.1 INSTALLING SOD TIME AND CONDITIONS

3.1.1 Sodding Time

Sod shall be installed from April 15th to May 30th for spring establishment; from August 15th to November 1st for fall establishment.

3.1.2 Sodding Conditions

Sodding operations shall be performed only during periods when beneficial results can be obtained. When drought, excessive moisture or other unsatisfactory conditions prevail, the work shall be stopped when directed. When special conditions warrant a variance to the sodding operations, proposed alternate times shall be submitted for approval.

3.1.3 Equipment Calibration

Immediately prior to the commencement of sodding operations, calibration tests shall be conducted on the equipment to be used. These tests shall confirm that the equipment is operating within the manufacturer's specifications and will meet the specified criteria. The equipment shall be calibrated a minimum of once every day during the operation. Provide calibration test results within one week of testing.

3.1.4 Topsoil Requirements and Testing

Delivered select topsoil borrow, existing soil in smooth graded areas, and stockpiled topsoil shall be tested in accordance with ASTM D 5268 and ASTM D 4972 for determining the particle size, pH, organic matter content, and textural class. All topsoil shall meet the following requirements:

Material Passing 2.00 mm Sieve	Min.	Max.
Clay	5%	n/a
Silt	10%	70%
Sand and Gravel	20%	70%
Organic Matter	3%	20%
pH	6.1	7.5

3.2 SITE PREPARATION

3.2.1 Finished Grade and Topsoil

Prior to the commencement of the sodding operation, the Contractor shall verify that finished grades are as indicated on drawings; the placing of topsoil, smooth grading, and compaction requirements have been completed in accordance with Section 02300 EARTHWORK.

3.2.2 Application of Soil Amendments

3.2.2.1 Applying pH Adjuster

The pH adjuster shall be applied at the rate recommended by the soil test. The pH adjuster shall be incorporated into the soil to a maximum 4 inch depth or may be incorporated as part of the tillage operation.

3.2.2.2 Applying Fertilizer

The fertilizer shall be applied at the rate recommended by the soil test. Fertilizer shall be incorporated into the soil to a maximum 4 inch depth or may be incorporated as part of the tillage or hydroseeding operation.

3.2.2.3 Applying Soil Conditioner

The soil conditioner shall be as recommended by the soil test. The soil conditioner shall be spread uniformly over the soil a minimum 1 inch depth and thoroughly incorporated by tillage into the soil to a maximum 4 inches depth.

3.2.2.4 Applying Super Absorbent Polymers

Polymers shall be spread uniformly over the soil as recommended by the manufacturer and thoroughly incorporated by tillage into the soil to a maximum 2 inches deep prior to placement of sod.

3.2.3 Tillage

Soil on slopes up to a maximum 3-horizontal-to-1-vertical shall be tilled to a minimum 4 inches deep. On slopes between 3-horizontal-to-1-vertical and 1-horizontal-to-1 vertical, the soil shall be tilled to a minimum 2 inches deep by scarifying with heavy rakes, or other method. Rototillers shall be used where soil conditions and length of slope permit. On slopes 1-horizontal-to-1 vertical and steeper, no tillage is required. Drainage patterns shall be maintained as indicated on drawings. Areas compacted by construction operations shall be completely pulverized by tillage. Soil used for repair of surface erosion or grade deficiencies shall conform to

topsoil requirements. The pH adjuster, fertilizer, and soil conditioner may be applied during this procedure.

3.2.4 Prepared Surface

3.2.4.1 Preparation

The prepared surface shall be a maximum 1 inch below the adjoining grade of any surfaced area. New surfaces shall be blended to existing areas. The prepared surface shall be rolled and completed with a light raking to remove from the surface debris and stones over a minimum 5/8 inch in any dimension.

3.2.4.2 Protection

Areas within the prepared surface shall be protected from compaction or damage by vehicular or pedestrian traffic and surface erosion.

3.3 INSTALLATION

Prior to installing sod, any previously prepared surface compacted or damaged shall be reworked to meet the requirements of paragraph SITE PREPARATION. Areas shall be sodded as indicated. Adequate soil moisture shall be ensured prior to sodding by spraying water on the area to be sodded and wetting the soil to a maximum 1 inch depth.

3.3.1 Installing Sod

Rows of sod sections shall be placed parallel to and tightly against each other. Joints shall be staggered laterally. The sod sections shall not be stretched or overlapped. All joints shall be butted tight. Voids and air drying of roots shall be prevented. Sod sections shall be laid across the slope on long slopes. Sod sections shall be laid at right angles to the flow of water in ditches. Sod sections shall be anchored on slopes steeper than 3-horizontal-to-1-vertical. Anchoring may be required when surface weight or pressure upon placed sod sections is anticipated to cause lateral movement. Sod anchors shall be placed a minimum 2 feet on center with a minimum 2 anchors per sod section.

3.3.2 Finishing

Displacement of the sod shall be prevented by tamping or rolling the sod in place and knitting the sod to the soil. Air pockets shall be eliminated and a true and even surface shall be provided. Frayed edges shall be trimmed, and holes or missing corners shall be patched with sod.

3.3.3 Rolling

The entire area shall be firmed with a roller not exceeding 90 pounds per foot roller width. Slopes over a maximum 3-horizontal-to-1 vertical shall not be rolled.

3.3.4 Watering Sod

Watering shall be started immediately after completing each day of installing sod. Water shall be applied at least 3 times per week to supplement rainfall, at a rate sufficient to ensure moist soil conditions to a minimum depth of 1 inch. Run-off, puddling, and wilting shall be prevented. Unless otherwise directed, watering trucks shall not be driven

over turf areas. Watering of other adjacent areas or plant material shall be prevented.

3.4 TEMPORARY SEEDING

The application rate shall be a mixture of Alfalfa @ (3 to 4 pounds per acre). Regreen @ (17-20 lbs per acre). The above seed mix shall be used where indicated on drawings, and if a contract delay prevents the sodding operation and quck cover is required to prevent surface erosion., perennial Rye @ (10 lbs/acre).

3.5 QUANTITY CHECK

For materials provided in bags, the empty bags shall be retained for recording the amount used. For materials provided in bulk, the weight certificates shall be retained as a record of the amount used. The amount of the material used shall be compared with the total area covered to determine the rate of application. The quantity of sod used shall be compared against the total area established with sod. Differences between the quantity applied and the quantity specified shall be adjusted as directed.

3.6 APPLICATION OF PESTICIDE

When application of a pesticide becomes necessary to remove a pest or disease, a pesticide treatment plan shall be submitted and coordinated with the installation pest management program.

3.6.1 Technical Representative

The certified installation pest management coordinator shall be the technical representative, and shall be present at all meetings concerning treatment measures for pest or disease control. They may be present during treatment application.

3.6.2 Application

A state certified applicator shall apply required pesticides in accordance with EPA label restrictions and recommendations. Clothing and personal protective equipment shall be used as specified on the pesticide label. A closed system is recommended as it prevents the pesticide from coming into contact with the applicator or other persons. Water for formulating shall only come from designated locations. Filling hoses shall be fitted with a backflow preventer meeting local plumbing codes or standards. Overflow shall be prevented during the filling operation. Prior to each day of use, the equipment used for applying pesticide shall be inspected for leaks, clogging, wear, or damage. Any repairs are to be performed immediately.

3.7 RESTORATION AND CLEAN UP

3.7.1 Restoration

Existing turf areas, pavements, and facilities that have been damaged from the sodding operation shall be restored to original condition at Contractor's expense.

3.7.2 Clean Up

Excess and waste material shall be removed from the sodded areas and shall

be disposed offsite. Adjacent paved areas shall be cleaned.

3.8 PROTECTION OF INSTALLED AREAS

Immediately upon completion of the sodding operation in an area, the area shall be protected against traffic or other use by erecting barricades and providing signage as required, or as directed.

3.9 SOD ESTABLISHMENT PERIOD

3.9.1 Commencement

The sod establishment period to obtain a healthy stand of grass plants shall begin on the first day of work under this contract and shall end 3 months after the last day of sodding operation. Written calendar time period shall be furnished for the sod establishment period. When there is more than 1 sod establishment period, the boundaries of the sodded area covered for each period shall be described. The sod establishment period should be coordinated with Section 02930 EXTERIOR PLANTING. The sod establishment period shall be modified for inclement weather, shut down periods, or for separate completion dates of areas.

3.9.2 Satisfactory Stand of Grass Plants

Grass plants shall be evaluated for species and health. A satisfactory stand of grass plants from the sodding operation shall be living sod uniform in color and leaf texture. Bare spots shall be a maximum 2 inch square. Joints between sod pieces shall be tight and free from weeds and other undesirable growth.

3.9.3 Maintenance During Establishment Period

Maintenance of the sodded areas shall include eradicating weeds, insects and diseases; protecting embankments and ditches from surface erosion; maintaining erosion control materials and mulch; protecting installed areas from traffic; mowing; watering; and post-fertilization.

3.9.3.1 Mowing

Sodded areas shall be mowed to a minimum 3 inch height when the turf is a maximum 4 inch height. Clippings shall be removed when the amount cut prevents sunlight from reaching the ground surface.

3.9.3.2 Post-Fertilization

The fertilizer shall be applied as recommended by the soil test. A maximum 1/2 pound per 1000 square feet of actual available nitrogen shall be provided to the grass plants. The application shall be timed prior to the advent of winter dormancy and shall be made without burning the installed grass plants.

3.9.3.3 Pesticide Treatment

Treatment for disease or pest shall be in accordance with paragraph APPLICATION OF PESTICIDE.

3.9.3.4 Repair

Unsatisfactory stand of grass plants shall be repaired or reinstalled, and

eroded areas shall be repaired in accordance with paragraph SITE PREPARATION.

3.9.3.5 Maintenance Record

A record of each site visit shall be furnished which describes the maintenance work performed; areas repaired or reinstalled; and diagnosis for unsatisfactory stand of grass plants.

-- End of Section --

SECTION TABLE OF CONTENTS

DIVISION 02 - SITE WORK

SECTION 02930

EXTERIOR PLANTING

06/98

PART 1 GENERAL

1.1 REFERENCES
1.2 SUBMITTALS
1.3 SOURCE INSPECTIONS
1.4 DELIVERY, INSPECTION, STORAGE, AND HANDLING
1.4.1 Delivery
1.4.1.1 Plant Material Identification
1.4.1.2 Protection During Delivery
1.4.1.3 Delivered Topsoil
1.4.1.4 Soil Amendments
1.4.1.5 Pesticide Material
1.4.2 Inspection
1.4.3 Storage
1.4.3.1 Plant Material Storage
1.4.3.2 Other Material Storage
1.4.4 Handling
1.4.5 Time Limitation
1.5 WARRANTY

PART 2 PRODUCTS

2.1 PLANT MATERIAL
2.1.1 Plant Material Classification
2.1.2 Plant Schedule
2.1.3 Substitutions
2.1.4 Quality
2.1.5 Growing Conditions
2.1.6 Method of Shipment to Maintain Health of Root System
2.1.6.1 Balled and Burlapped (BB) Plant Material
2.1.6.2 Balled and Potted (Pot) Plant Material
2.1.6.3 Not Used
2.1.6.4 Not Used
2.1.6.5 Container-Grown (C) Plant Material
2.1.7 Growth of Trunk and Crown
2.1.7.1 Deciduous Trees
2.1.7.2 Not Used
2.1.7.3 Deciduous Shrubs
2.1.7.4 Coniferous Evergreen Plant Material
2.1.7.5 Not Used
2.1.7.6 Ground Cover and Vine Plant Material
2.1.8 Plant Material Size
2.1.9 Plant Material Measurement
2.2 TOPSOIL
2.2.1 Planting Soil
2.3 SOIL AMENDMENTS

2.3.1 pH Adjuster
2.3.1.1 Limestone
2.3.1.2 Hydrated Lime
2.3.1.3 Burnt Lime
2.3.2 Fertilizer
2.3.3 Organic Material
2.3.3.1 Bonemeal
2.3.3.2 Rotted Manure
2.3.3.3 Decomposed Wood Derivatives
2.3.3.4 Recycled Compost
2.3.3.5 Worm Castings
2.3.4 Soil Conditioner
2.3.4.1 Sand
2.3.4.2 Super Absorbent Polymers
2.3.4.3 Calcined Clay
2.3.4.4 Gypsum
2.3.4.5 Expanded Shale, Clay, or Slate (ESCS)
2.4 MULCH
2.4.1 Inorganic Mulch
2.4.2 Organic Mulch
2.5 GEOTEXTILE
2.6 WOOD STAKING MATERIAL
2.6.1 Bracing Stake
2.6.2 Wood Ground Stakes
2.6.3 Deadmen
2.7 METAL STAKING AND GUYING MATERIAL
2.7.1 Bracing Stakes
2.7.2 Metal Ground Stakes
2.7.3 Earth Anchor
2.7.4 Guying Material
2.7.5 Turnbuckle
2.8 Not Used
2.9 RUBBER GUYING MATERIAL
2.10 FLAG
2.11 TREE ROOT BARRIERS
2.12 MYCORRHIZAL FUNGI INOCULUM
2.13 WATER
2.14 PESTICIDE
2.15 LANDSCAPE EDGING

PART 3 EXECUTION

3.1 INSTALLING PLANT MATERIAL TIME AND CONDITIONS
3.1.1 Deciduous Plant Material Time
3.1.2 Evergreen Plant Material Time
3.1.3 Plant Material Conditions
3.1.4 Tests
3.1.4.1 Percolation Test
3.1.4.2 Soil Requirements and Testing
3.2 SITE PREPARATION
3.2.1 Finished Grade, Topsoil and Underground Utilities
3.2.2 Layout
3.2.3 Protecting Existing Vegetation
3.3 EXCAVATION
3.3.1 Obstructions Below Ground
3.3.2 Turf Removal
3.3.3 Plant Pits
3.4 INSTALLATION
3.4.1 Setting Plant Material

3.4.1.1 Bare-Root Plant Material
3.4.2 Tree Root Barrier
3.4.3 Backfill Soil Mixture
3.4.4 Adding Mycorrhizal Fungi Inoculum
3.4.5 Backfill Procedure
3.4.5.1 Balled and Burlapped, and Balled and Platformed Plant Material
3.4.5.2 Not Used
3.4.5.3 Container-Grown and Balled and Potted Plant Material
3.4.5.4 Earth Berm
3.4.6 Plant Bed
3.4.7 Watering
3.4.8 Staking and Guying
3.4.8.1 One Bracing Stake
3.4.8.2 Two Bracing Stakes
3.4.8.3 Three Ground Stakes
3.4.9 Not Used
3.4.10 Flags
3.5 FINISHING
3.5.1 Plant Material
3.5.2 Placing Geotextile
3.5.3 Placing Mulch
3.5.4 Pruning
3.6 MAINTENANCE DURING PLANTING OPERATION
3.7 APPLICATION OF PESTICIDE
3.7.1 Technical Representative
3.7.2 Application
3.8 RESTORATION AND CLEAN UP
3.8.1 Restoration
3.8.2 Clean Up
3.9 PLANT ESTABLISHMENT PERIOD
3.9.1 Commencement
3.9.2 Maintenance During Establishment Period
3.9.2.1 Watering Plant Material
3.9.2.2 Weeding
3.9.2.3 Pesticide Treatment
3.9.2.4 Post-Fertilization
3.9.2.5 Plant Pit Settling
3.9.2.6 Maintenance Record
3.9.3 Unhealthy Plant Material
3.9.4 Replacement Plant Material
3.9.5 Maintenance Instructions

-- End of Section Table of Contents --

SECTION 02930

EXTERIOR PLANTING
06/98

PART 1 GENERAL

1.1 REFERENCES

The publications listed below form a part of this specification to the extent referenced. The publications are referred to in the text by basic designation only.

AMERICAN NURSERY AND LANDSCAPE ASSOCIATION (ANLA)

ANLA ANSI/ANLA Z60.1	(1996) American Standard for Nursery Stock

AMERICAN NATIONAL STANDARDS INSTITUTE (ANSI)

ANSI A300	(1995) Tree Care Operations - Trees, Shrubs and other Woody Plant Maintenance

AMERICAN SOCIETY FOR TESTING AND MATERIALS (ASTM)

ASTM C 602	(1995a) Agricultural Liming Materials
ASTM D 4972	(1995a) pH of Soils
ASTM D 5034	(1995) Breaking Strength and Elongation of Textile Fabrics (Grab Test)
ASTM D 5035	(1995) Breaking Strength and Elongation of Textile Fabrics (Grab Test)
ASTM D 5268	(1992; R1996) Topsoil Used for Landscaping Purposes
ASTM D 5883	(1996) Standard Guide for Use of Rotary Kiln Produced Expanded Shale, Clay or Slate (ESCS) as a Mineral Amendment in Topsoil Used for Landscaping and Related Purposes

1.2 SUBMITTALS

Government approval is required for submittals with a "G" designation; submittals not having a "G" designation are for information only. When used, a designation following the "G" designation identifies the office that will review the submittal for the Government. The following shall be submitted in accordance with Section 01330 SUBMITTAL PROCEDURES:

SD-02 Shop Drawings

Finished Grade, Topsoil and Underground Utilities;

Finished grade status; location of underground utilities and facilities; and availability of topsoil from the stripping and stock piling operation.

SD-03 Product Data

Geotextile; G-AO
Chemical Treatment Material;

Manufacturer's literature including physical characteristics, application and installation instructions for geotextile and chemical treatment material.

Equipment;

A listing of equipment to be used for the planting operation.

Delivery;

Delivery schedule.

Plant Establishment Period;

Calendar time period for the plant establishment period. When there is more than one establishment period, the boundaries of the planted areas covered for each period shall be described.

Maintenance Record; G-AO

Maintenance work performed, quantity of plant losses, and replacements; and diagnosis of unhealthy plant material.

Application of Pesticide;

Pesticide treatment plan with sequence of treatment work with dates and times. The pesticide trade name, EPA registration number, chemical composition, formulation, concentration of original and diluted material, application rate of active ingredients, method of application, area treated, amount applied; and the name and state license number of the state certified applicator shall be included.

SD-06 Test Reports

Soil Test; G-AO
Percolation Test; G-AO

Certified reports of inspections and laboratory tests, prepared by an independent testing agency, including analysis and interpretation of test results. Each report shall be properly identified. Test methods used and compliance with recognized test standards shall be described.

SD-07 Certificates

Plant Material;
Topsoil;
pH Adjuster;
Fertilizer;

Organic Material;
Soil Conditioner;
Organic Mulch;
Pesticide;

Prior to delivery of materials, certificates of compliance attesting that materials meet the specified requirements. Certified copies of the material certificates shall include the following.

a. Plant Material: Classification, botanical name, common name, size, quantity by species, and location where grown.

b. Topsoil: Particle size, pH, organic matter content, textural class, soluble salts, chemical and mechanical analyses.

c. pH Adjuster: Sieve analysis and calcium carbonate equivalent.

d. Fertilizer: Chemical analysis and composition percent.

e. Organic Material: Composition and source.

f. Soil Conditioner: Composition and source.

g. Organic Mulch: Composition, source, and treatment against fungi growth.

h. Pesticide. EPA registration number and registered uses.

SD-10 Operation and Maintenance Manuals

Maintenance Instructions;

Instruction for year-round care of installed plant material.

1.3 SOURCE INSPECTIONS

The nursery or source of plant material and the source of delivered topsoil shall be subject to inspection.

1.4 DELIVERY, INSPECTION, STORAGE, AND HANDLING

1.4.1 Delivery

A delivery schedule shall be provided at least 10 calendar days prior to the first day of delivery.

1.4.1.1 Plant Material Identification

Plant material shall be identified with attached, durable, waterproof labels and weather-resistant ink, stating the correct botanical plant name and size.

1.4.1.2 Protection During Delivery

Plant material shall be protected during delivery to prevent desiccation and damage to the branches, trunk, root system, or earth ball. Branches shall be protected by tying-in. Exposed branches shall be covered during transport.

1.4.1.3 Delivered Topsoil

Prior to the delivery of any topsoil, the availability of topsoil shall be verified in paragraph TOPSOIL. A soil test shall be provided for delivered topsoil.

1.4.1.4 Soil Amendments

Soil amendments shall be delivered to the site in the original, unopened containers bearing the manufacturer's chemical analysis. In lieu of containers, soil amendments may be furnished in bulk. A chemical analysis shall be provided for bulk deliveries.

1.4.1.5 Pesticide Material

Pesticide material shall be delivered to the site in the original, unopened containers bearing legible labels indicating the Environmental Protection Agency (EPA) registration number and the manufacturer's registered uses.

1.4.2 Inspection

Plant material shall be well shaped, vigorous and healthy with a healthy, well branched root system, free from disease, harmful insects and insect eggs, sun-scald injury, disfigurement or abrasion. Plant material shall be checked for unauthorized substitution and to establish nursery grown status. Plant material showing desiccation, abrasion, sun-scald injury, disfigurement, or unauthorized substitution shall be rejected. The plant material shall exhibit typical form of branch to height ratio; and meet the caliper and height measurements specified. Plant material that measures less than specified, or has been poled, topped off or headed back, shall be rejected. Container-grown plant material shall show new fibrous roots and the root mass shall contain its shape when removed from the container. Plant material with broken or cracked balls; or broken containers shall be rejected. Bare-root plant material that is not dormant or is showing roots were pulled from the ground shall be rejected. Other materials shall be inspected for compliance with paragraph PRODUCTS. Open soil amendment containers or wet soil amendments shall be rejected. Topsoil that contains slag, cinders, stones, lumps of soil, sticks, roots, trash or other material larger than 1-1/2 inch diameter shall be rejected. Topsoil that contains viable plant material and plant parts shall be rejected. Unacceptable material shall be removed from the job site.

1.4.3 Storage

1.4.3.1 Plant Material Storage

Plant material not installed on the day of arrival at the site shall be stored and protected in designated areas. Plant material shall not be stored longer than 30 days. Plant material shall be protected from direct exposure to wind and sun. Bare-root plant material shall be heeled-in. All plant material shall be kept in a moist condition by watering with a fine mist spray until installed.

1.4.3.2 Other Material Storage

Storage of other material shall be in designated areas. Soil amendments shall be stored in dry locations and away from contaminants. Chemical treatment material shall be stored according to manufacturer's instructions

and not with planting operation material.

1.4.4 Handling

Plant material shall not be injured in handling. Cracking or breaking the earth ball of balled and burlapped plant material shall be avoided. Plant material shall not be handled by the trunk or stems. Materials shall not be dropped from vehicles.

1.4.5 Time Limitation

Except for container-grown plant material, the time limitation from digging to installing plant material shall be a maximum 90 days. The time limitation between installing the plant material and placing the mulch shall be a maximum 24 hours.

1.5 WARRANTY

Furnished plant material shall have a warranty for plant growth to be in a vigorous growing condition for a minimum 12 month period. A minimum 12 month calendar time period for the warranty of plant growth shall be provided regardless of the contract time period. When plant material is determined to be unhealthy in accordance with paragraph PLANT ESTABLISHMENT PERIOD, it shall be replaced once under this warranty.

PART 2 PRODUCTS

2.1 PLANT MATERIAL

2.1.1 Plant Material Classification

The plant material shall be nursery grown stock conforming to ANLA ANSI/ANLA Z60.1 and shall be the species specified.

2.1.2 Plant Schedule

The plant schedule shall provide botanical names as included in one or more of the publications listed under "Nomenclature" in ANLA ANSI/ANLA Z60.1.

2.1.3 Substitutions

Substitutions will not be permitted without written request and approval from the Contracting Officer.

2.1.4 Quality

Well shaped, well grown, vigorous plant material having healthy and well branched root systems in accordance with ANLA ANSI/ANLA Z60.1 shall be provided. Plant material shall be provided free from disease, harmful insects and insect eggs, sun-scald injury, disfigurement and abrasion. Plant material shall be free of shock or damage to branches, trunk, or root systems, which may occur from the digging and preparation for shipment, method of shipment, or shipment. Plant quality is determined by the growing conditions; method of shipment to maintain health of the root system; and growth of the trunk and crown as follows.

2.1.5 Growing Conditions

Plant material shall be native to or well-suited to the growing conditions

of the project site. Plant material shall be grown under climatic conditions similar to those at the project site.

2.1.6 Method of Shipment to Maintain Health of Root System

2.1.6.1 Balled and Burlapped (BB) Plant Material

Ball size and ratio shall be in accordance with ANLA ANSI/ANLA Z60.1. The ball shall be of a diameter and depth to encompass enough fibrous and feeding root system necessary for the full recovery of the plant. The plant stem or trunk shall be centered in the ball. All roots shall be clean cut at the ball surface. Roots shall not be pulled from the ground. Before shipment the root ball shall be dipped in gels containing mycorrhizal fungi inoculum. The root ball shall be completely wrapped with burlap or other suitable material and securely laced with biodegradable twine.

2.1.6.2 Balled and Potted (Pot) Plant Material

Ball size and ratio shall be in accordance with ANLA ANSI/ANLA Z60.1. The ball shall be of a diameter and depth to encompass enough fibrous and feeding root system necessary for the full recovery of the plant. Removal shall be done by hand digging or mechanical devices. The plant stem or trunk shall be centered in the ball. All roots shall be clean cut at the ball surface. Roots shall not be pulled from the ground. Before shipment the root ball shall be dipped in gels containing mycorrhizal fungi inoculum. Container shall be used to retain the ball unbroken. Container shall be rigid to hold ball shape and protect root mass during shipping.

2.1.6.3 Not Used

2.1.6.4 Not Used

2.1.6.5 Container-Grown (C) Plant Material

Container size shall be in accordance with ANLA ANSI/ANLA Z60.1. Plant material shall be grown in a container over a duration of time for new fibrous roots to have developed and for the root mass to retain its shape and hold together when removed from the container. Container-grown plant material shall be inoculated with mycorrhizal fungi during germination in the nursery. Before shipment the root system shall be dipped in gels containing mycorrhizal fungi inoculum. The container shall be sufficiently rigid to hold ball shape and protect root mass during shipping.

2.1.7 Growth of Trunk and Crown

2.1.7.1 Deciduous Trees

A height to caliper relationship shall be provided in accordance with ANLA ANSI/ANLA Z60.1. Height of branching shall bear a relationship to the size and species of tree specified and with the crown in good balance with the trunk. The trees shall not be "poled" or the leader removed.

a. Single stem: The trunk shall be reasonably straight and symmetrical with crown and have a persistent main leader.

b. Multi-stem: All countable stems, in aggregate, shall average the size specified. To be considered a stem, there shall be no division of the trunk which branches more than 6 inches from

ground level.

c. Specimen: The tree provided shall be well branched and pruned naturally according to the species. The form of growth desired, which may not be in accordance with natural growth habit, shall be as indicated.

2.1.7.2 Not Used

2.1.7.3 Deciduous Shrubs

Deciduous shrubs shall have the height and number of primary stems recommended by ANLA ANSI/ANLA Z60.1. Acceptable plant material shall be well shaped, with sufficient well-spaced side branches, and recognized by the trade as typical for the species grown in the region of the project.

2.1.7.4 Coniferous Evergreen Plant Material

Coniferous Evergreen plant material shall have the height-to-spread ratio recommended by ANLA ANSI/ANLA Z60.1. The coniferous evergreen trees shall not be "poled" or the leader removed. Acceptable plant material shall be exceptionally heavy, well shaped and trimmed to form a symmetrical and tightly knit plant. The form of growth desired shall be as indicated.

2.1.7.5 Not Used

2.1.7.6 Ground Cover and Vine Plant Material

Ground cover and vine plant material shall have the minimum number of runners and length of runner recommended by ANLA ANSI/ANLA Z60.1. Plant material shall have heavy, well developed and balanced crown with vigorous, well developed root system and shall be furnished in containers.

2.1.8 Plant Material Size

Plant material shall be furnished in sizes indicated. Plant material larger in size than specified may be provided at no additional cost to the Government.

2.1.9 Plant Material Measurement

Plant material measurements shall be in accordance with ANLA ANSI/ANLA Z60.1.

2.2 TOPSOIL

Topsoil shall be as defined in ASTM D 5268. When available, the topsoil shall be the existing surface soil stripped and stockpiled onsite in accordance with Section 02300 EARTHWORK. When additional topsoil is required beyond the available topsoil from the stripping operation, topsoil shall be delivered and amended as recommended by the soil test for the plant material specified. Topsoil shall be free from slag, cinders, stones, lumps of soil, sticks, roots, trash or other material over a minimum 1-1/2 inch diameter. Topsoil shall be free from viable plants and plant parts.

2.2.1 Planting Soil

Mix soil amendments (refer to 3.2.2) with topsoil at rates recommended by the soil test.

2.3 SOIL AMENDMENTS

Soil amendments shall consist of pH adjuster, fertilizer, organic material and soil conditioners meeting the following requirements. Vermiculite is not recommended.

2.3.1 pH Adjuster

The pH adjuster shall be an agricultural liming material in accordance with ASTM C 602. These materials may be burnt lime, hydrated lime, ground limestone, or shells. The pH adjuster shall be used to create a favorable soil pH for the plant material specified.

2.3.1.1 Limestone

Limestone material shall contain a minimum calcium carbonate equivalent of 80 percent. Gradation: A minimum 95 percent shall pass through a No. 8 sieve and a minimum 55 percent shall pass through a No. 60 sieve. To raise soil pH, ground limestone shall be used.

2.3.1.2 Hydrated Lime

Hydrated lime shall contain a minimum calcium carbonate equivalent of 110 percent. Gradation: A minimum 100 percent shall pass through a No. 8 sieve and a minimum 97 percent shall pass through a No. 60 sieve.

2.3.1.3 Burnt Lime

Burnt lime shall contain a minimum calcium carbonate equivalent of 140 percent. Gradation: A minimum 95 percent shall pass through a No. 8 sieve and a minimum 35 percent shall pass through a No. 60 sieve.

2.3.2 Fertilizer

It shall be as recommended by the soil test. Fertilizer shall be controlled release commercial grade; free flowing, pellet or tablet form; uniform in composition; and consist of a nitrogen-phosphorus-potassium ratio. The fertilizer shall be derived from sulphur coated urea, urea formaldehyde, plastic or polymer coated pills, or isobutylenediurea (IBDU). Fertilizer shall be balanced with the inclusion of trace minerals and micro-nutrients.

2.3.3 Organic Material

Organic material shall consist of either bonemeal, peat, rotted manure, decomposed wood derivatives, recycled compost, or worm castings.

2.3.3.1 Bonemeal

Bonemeal shall be a finely ground, steamed bone product containing from 2 to 4 percent nitrogen and 16 to 40 percent phosphoric acid.

2.3.3.2 Rotted Manure

Rotted manure shall be unleached horse, chicken, or cattle manure containing a maximum 25 percent by volume of straw, sawdust, or other bedding materials. Manure shall contain no chemicals or ingredients harmful to plants. The manure shall be heat treated to kill weed seeds and

shall be free of stones, sticks, and soil.

2.3.3.3 Decomposed Wood Derivatives

Decomposed wood derivatives shall be ground bark, sawdust, or other wood waste material free of stones, sticks, and toxic substances harmful to plants, and stabilized with nitrogen.

2.3.3.4 Recycled Compost

Compost shall be a well decomposed, stable, weed free organic matter source. It shall be derived from food, agricultural, or industrial residuals; biosolids (treated sewage sludge); yard trimmings; or source-separated or mixed solid waste. The compost shall possess no objectionable odors and shall not resemble the raw material from which it was derived. The material shall not contain substances toxic to plants. Gradation: The compost material shall pass through a 3/8 inch screen, possess a pH of 5.5 to 8.0, and have a moisture content between 35-55 percent by weight. The material shall not contain more than 1 percent or less by weight of man-made foreign matter. Compost shall be cleaned of plastic materials larger than 2 inches in length.

2.3.3.5 Worm Castings

Worm castings shall be screened from worms and food source and shall be commercially packaged.

2.3.4 Soil Conditioner

Soil conditioner shall be sand, super absorbent polymers, calcined clay, or gypsum for single use or in combination to meet topsoil requirements for the plant material specified.

2.3.4.1 Sand

Sand shall be clean and free of toxic materials. Gradation: A minimum 95 percent by weight shall pass a No. 10 sieve and a minimum 10 percent by weight shall pass a No. 16 sieve. Greensand shall be balanced with the inclusion of trace minerals and nutrients.

2.3.4.2 Super Absorbent Polymers

To improve water retention in soils, super absorbent polymers shall be sized according to manufacturer's recommendations. Polymers shall be added as a soil amendment and be cross-linked polyacrylamide with an absorption capacity of 250-400 times its weight.

2.3.4.3 Calcined Clay

Granular particles shall be produced from montmorillonite clay calcined to minimum temperature of 1200 degrees F. Gradation: A minimum 90 percent passing No. 8 sieve; a minimum 99 percent shall be retained on No. 60 sieve; and a maximum 2 percent shall pass a No. 100 sieve. Bulk density: A maximum 40 pounds per cubic foot.

2.3.4.4 Gypsum

Gypsum shall be commercially packaged, free flowing, and a minimum 95 percent calcium sulfate by volume.

2.3.4.5 Expanded Shale, Clay, or Slate (ESCS)

Rotary kiln produced ESCS material shall be in conformance with ASTM D 5883.

2.4 MULCH

Mulch shall be free from weeds, mold, and other deleterious materials. Mulch materials shall be native to the region. Rotted manure is not recommended to be used as a mulch because it would encourage surface rooting of the plant material and weeds.

2.4.1 Inorganic Mulch

When inorganic mulch is required for decorative purposes, it shall be provided in areas designated, and consist of:

a. Riverbank stone ranging in size from 18mm (3/4 inches) to 36 mm (1.5 inches)

2.4.2 Organic Mulch

Organic Mulch materials shall be native to the project site and consist of shredded hardwood mulch. Gradation: A maximum 50mm (2 inches) wide by 100mm (4 inches) long".

2.5 GEOTEXTILE

Geotextile shall be woven or nonwoven; polypropylene, polyester, or fiberglass, mat in accordance with ASTM D 5034 or ASTM D 5035. It shall be made specifically for use as a fabric around plant material. Nominal weight shall be a minimum 4 ounces per square yard. Permeability rate shall be a minimum 0.04 inch per second.

2.6 WOOD STAKING MATERIAL

Wood stakes shall be hardwood or fir; rough sawn; free from knots, rot, cross grain, or other defects that would impair their strength.

2.6.1 Bracing Stake

Wood bracing stakes shall be a minimum 2 x 2 inch square and a minimum 8 feet long with a point at one end. Stake shall be set without damaging rootball.

2.6.2 Wood Ground Stakes

Wood ground stakes shall be a minimum of 2 x 2 inch square and a minimum 3 feet long with a point at one end.

2.6.3 Deadmen

Wood deadmen shall be a minimum 4 x 4 x 36 inches long.

2.7 METAL STAKING AND GUYING MATERIAL

Metal shall be aluminum or steel consisting of recycled content made for holding plant material in place.

2.7.1 Bracing Stakes

Metal bracing stakes shall be a minimum 1 inch diameter and a minimum 8 feet long. Stake shall be set without damaging rootball.

2.7.2 Metal Ground Stakes

Metal ground stakes shall be a minimum 1/2 inch diameter and a minimum 3 feet long.

2.7.3 Earth Anchor

Metal earth anchors shall be a minimum 1/2 inch diameter and a minimum 2 feet long.

2.7.4 Guying Material

Metal guying material shall be a minimum 12 gauge wire. Multi-strand cable shall be woven wire. Guying material tensile strength shall conform to the size of tree to be held firmly in place.

2.7.5 Turnbuckle

Metal turnbuckles shall be galvanized or cadmium-plated steel, and shall be a minimum 3 inches long with closed screw eyes on each end. Screw thread tensile strength shall conform to the size of tree to be held firmly in place.

2.8 Not Used

2.9 RUBBER GUYING MATERIAL

Rubber chafing guards, consisting of recycled material, shall be used to protect tree trunks and branches when metal guying material is applied. The material shall be the same color throughout the project. Length shall be a minimum 1.5 times the circumference of the plant trunk at its base.

2.10 FLAG

Plastic flag material shall be used on guying material. It shall be a minimum 6 inches long. Tape color shall be consistent and visually complimentary to the entire project area. The tape color shall meet pedestrian visual safety requirements for day and night.

2.11 TREE ROOT BARRIERS

Tree root barriers shall be metal or plastic consisting of recycled content. Barriers shall utilize vertical stabilizing members to encourage downward tree root growth. Barriers shall limit, by a minimum 90 percent, the occurrence of surface roots. Tree root barriers which are designed to be used as plant pit liners will be rejected.

2.12 MYCORRHIZAL FUNGI INOCULUM

Mycorrhizal fungi inoculum shall be composed of multiple-fungus inoculum as recommended by the manufacturer for the plant material specified.

2.13 WATER

Unless otherwise directed, water shall be the responsibility of the Contractor. Water shall not contain elements toxic to plant life.

2.14 PESTICIDE

Pesticide shall be insecticide, herbicide, fungicide, nematocide, rodenticide or miticide. For the purpose of this specification a soil fumigant shall have the same requirements as a pesticide. The pesticide material shall be EPA registered and approved.

2.15 LANDSCAPE EDGING

Steel edging, rolled edge, standard steel edging, fabricated in sections with loops stamped from or welded to face of sections approximately 30 inches (760mm) apart to receive stakes.

1. Edging Size: 1/8 inch (2.2mm) wide by 4 inches (102mm) deep.
2. Stakes: Tapered steel, 15 inches (381mm) long.
3. Accessories: Standard tapered ends, corners, and splicers as required.
4. Finish: Standard paint finish, color - black.

PART 3 EXECUTION

3.1 INSTALLING PLANT MATERIAL TIME AND CONDITIONS

3.1.1 Deciduous Plant Material Time

Deciduous plant material shall be installed from APril 15th to October 30th.

3.1.2 Evergreen Plant Material Time

Evergreen plant material shall be installed from April 15th to October 30th

3.1.3 Plant Material Conditions

Planting operations shall be performed only during periods when beneficial results can be obtained. When drought, excessive moisture, frozen ground or other unsatisfactory conditions prevail, the work shall be stopped when directed. When special conditions warrant a variance to the planting operations, proposed planting times shall be submitted for approval.

3.1.4 Tests

3.1.4.1 Percolation Test

Test for percolation shall be done to determine positive drainage of plant pits and beds. A positive percolation shall consist of a minimum (1 inch) per 3 hours; when a negative percolation test occurs. Refer to tree planting details.

3.1.4.2 Soil Requirements and Testing

Delivered select topsoil borrow, excavated plant pit soil and stockpiled topsoil shall be tested in accordance with ASTM D 5268 and ASTM D 4972 for determining the particle size, pH, organic matter content, and textural class, chemical analysis, soluble salts analysis, and mechanical analysis. Sample collection on site shall be random over the entire site. Sample collection for stockpiled topsoil shall be at different levels in the stockpile. The soil shall be free from debris, noxious weeds, toxic

substances, or other materials harmful to plant growth. The test shall determine the quantities and type of soil amendments required to meet local growing conditions for the sod species specified.All topsoil shall meet the following requirements:

Material Passing 2.00 mm Sieve	Min.	Max.
Clay	5%	n/a
Silt	10%	70%
Sand and Gravel	20%	70%
Organic Matter	3%	20%
pH	6.1	7.5

3.2 SITE PREPARATION

3.2.1 Finished Grade, Topsoil and Underground Utilities

The Contractor shall verify that finished grades are as indicated on drawings, and that the placing of topsoil, the smooth grading, and the compaction requirements have been completed in accordance with Section 02300 EARTHWORK, prior to the commencement of the planting operation. The location of underground utilities and facilities in the area of the planting operation shall be verified. Damage to underground utilities and facilities shall be repaired at the Contractor's expense.

3.2.2 Layout

Plant material locations and bed outlines shall be staked on the project site before any excavation is made. Plant material locations may be adjusted to meet field conditions.

3.2.3 Protecting Existing Vegetation

When there are established lawns in the planting area, the turf shall be covered and/or protected during planting operations. Existing trees, shrubs, and plant beds that are to be preserved shall be barricaded along the dripline to protect them during planting operations.

3.3 EXCAVATION

3.3.1 Obstructions Below Ground

When obstructions below ground affect the work, shop drawings showing proposed adjustments to plant material location, type of plant and planting method shall be submitted for approval.

3.3.2 Turf Removal

Where the planting operation occurs in an existing lawn area, the turf shall be removed from the excavation area to a depth that will ensure the removal of the entire root system.

3.3.3 Plant Pits

Plant pits for ball and burlapped or container plant material shall be dug to a depth equal to the height of the root ball as measured from the base of the ball to the base of the plant trunk. Plant pits for bare-root plant material shall be dug to a depth equal to the height of the root system. Plant pits shall be dug a minimum 50 percent wider than the ball or root system to allow for root expansion. The pit shall be constructed with

sides sloping towards the base as a cone, to encourage well aerated soil to be available to the root system for favorable root growth. Cylindrical pits with vertical sides shall not be used.

3.4 INSTALLATION

3.4.1 Setting Plant Material

Plant material shall be set plumb and held in position until sufficient soil has been firmly placed around root system or ball. In relation to the surrounding grade, the plant material shall be set even with the grade at which it was grown.

3.4.1.1 Bare-Root Plant Material

Bare-root plant material shall be placed in water a minimum 30 minutes prior to setting.

3.4.2 Tree Root Barrier

Tree root barriers shall be installed as recommended by the manufacturer. Tree root barriers shall be used for trees located up to a maximum 6 feet from paved surfaces or structures.

3.4.3 Backfill Soil Mixture

The backfill soil mixture may be a mix of topsoil and soil amendments suitable for the plant material specified. When practical, the excavated soil from the plant pit that is not amended provides the best backfill and shall be used.

3.4.4 Adding Mycorrhizal Fungi Inoculum

Mycorrhizal fungi inoculum shall be added as recommended by the manufacturer for the plant material specified.

3.4.5 Backfill Procedure

Prior to backfilling, all metal, wood, synthetic products, or treated burlap devices shall be removed from the ball or root system avoiding damage to the root system. The backfill procedure shall remove air pockets from around the root system. Additional requirements are as follows.

3.4.5.1 Balled and Burlapped, and Balled and Platformed Plant Material

Biodegradable burlap and tying material shall be carefully opened and folded back from the top a minimum 1/3 depth from the top of the root ball. Backfill mixture shall be added to the plant pit in 6 inch layers with each layer tamped.

3.4.5.2 Not Used

3.4.5.3 Container-Grown and Balled and Potted Plant Material

The plant material shall be carefully removed from containers that are not biodegradeable. Prior to setting the plant in the pit, a maximum 1/4 depth of the root mass, measured from the bottom, shall be spread apart to promote new root growth. For plant material in biodegradable containers the container shall be split prior to setting the plant with container.

Backfill mixture shall be added to the plant pit in 6 inch layers with each layer tamped.

3.4.5.4 Earth Berm

An earth berm, consisting of backfill soil mixture, shall be formed with a minimum 4 inch height around the edge of the plant pit to aid in water retention and to provide soil for settling adjustments.

3.4.6 Plant Bed

Plant material shall be set in plant beds according to the drawings. Backfill soil mixture shall be placed on previously scarified subsoil to completely surround the root balls, and shall be brought to a smooth and even surface, blending to existing areas. Earth berms shall be provided. Polymers shall be spread uniformly over the plant bed and in the planting pit as recommended by the manufacturer and thoroughly incorporated into the soil to a maximum 4 inch depth.

3.4.7 Watering

Plant pits and plant beds shall be watered immediately after backfilling, until completely saturated.

3.4.8 Staking and Guying

Staking will be required when trees are unstable or will not remain set due to their size, shape, or exposure to high wind velocity.

3.4.8.1 One Bracing Stake

Trees 4 to 6 feet high shall be firmly anchored in place with one bracing stake. The bracing stake shall be placed on the side of the tree facing the prevailing wind. The bracing stake shall be driven vertically into firm ground and shall not injure the ball or root system. The tree shall be held firmly to the stake with a double strand of guying material. The guying material shall be firmly anchored at a minimum 1/2 tree height and shall prevent girdling. A chafing guard shall be used when metal is the guying material.

3.4.8.2 Two Bracing Stakes

Trees from 6 to 8 feet height shall be firmly anchored in place with 2 bracing stakes placed on opposite sides. Bracing stakes shall be driven vertically into firm ground and shall not injure the ball or root system. The tree shall be held firmly between the stakes with a double strand of guying material. The guying material shall be firmly anchored at a minimum 1/2 tree height and shall prevent girdling. Chafing guards shall be used when metal is the guying material.

3.4.8.3 Three Ground Stakes

Trees over a minimum 2400 mm 8 feet height and less than a maximum 150 mm 6 inch caliper shall be held firmly in place with 3 bracing or ground stakes spaced equidistantly around the tree. Ground stakes shall be avoided in areas to be mowed. Stakes shall be driven into firm ground outside the earth berm. The guying material shall be firmly anchored at a minimum 1/2 tree height and shall prevent girdling. For trees over maximum 3 inch diameter at breast height, turnbuckles shall be used on the guying material

for tree straightening purposes. One turnbuckle shall be centered on each guy line. Chafing guards shall be used when metal is the guying material.

3.4.9 Not Used

3.4.10 Flags

A flag shall be securely fastened to each guy line equidistant between the tree and the stake, deadmen, or earth anchor. The flag shall be visible to pedestrians.

3.5 FINISHING

3.5.1 Plant Material

Prior to placing mulch, the installed area shall be uniformly edged to provide a clear division line between the planted area and the adjacent turf area, shaped as indicated. The installed area shall be raked and smoothed while maintaining the earth berms.

3.5.2 Placing Geotextile

Prior to placing mulch, geotextile shall be placed as indicated in accordance with the manufacturer's recommendations.

3.5.3 Placing Mulch

The placement of mulch shall occur a maximum 48 hours after planting. Mulch, used to reduce soil water loss, regulate soil temperature and prevent weed growth, shall be spread to cover the installed area with a minimum 4 inch uniform thickness. Mulch shall be kept out of the crowns of shrubs, ground cover, and vines and shall be kept off buildings, sidewalks and other facilities.

3.5.4 Pruning

Pruning shall be accomplished by trained and experienced personnel. The pruning of trees and palms shall be in accordance with ANSI A300. Only dead or broken material shall be pruned from installed plants. The typical growth habit of individual plant material shall be retained. Clean cuts shall be made flush with the parent trunk. Improper cuts, stubs, dead and broken branches shall be removed. "Headback" cuts at right angles to the line of growth will not be permitted. Trees shall not be poled or the leader removed, nor shall the leader be pruned or "topped off".

3.6 MAINTENANCE DURING PLANTING OPERATION

Installed plant material shall be maintained in a healthy growing condition. Maintenance operations shall begin immediately after each plant is installed to prevent desiccation and shall continue until the plant establishment period commences. Installed areas shall be kept free of weeds, grass, and other undesired vegetation. The maintenance includes maintaining the mulch, watering, and adjusting settling.

3.7 APPLICATION OF PESTICIDE

When application of a pesticide becomes necessary to remove a pest or disease, a pesticide treatment plan shall be submitted and coordinated with the installation pest management program.

3.7.1 Technical Representative

The certified installation pest management coordinator shall be the technical representative, and shall be present at all meetings concerning treatment measures for pest or disease control. They may be present during treatment application.

3.7.2 Application

A state certified applicator shall apply required pesticides in accordance with EPA label restrictions and recommendations. Clothing and personal protective equipment shall be used as specified on the pesticide label. A closed system is recommended as it prevents the pesticide from coming into contact with the applicator or other persons. Water for formulating shall only come from designated locations. Filling hoses shall be fitted with a backflow preventer meeting local plumbing codes or standards. Overflow shall be prevented during the filling operation. Prior to each day of use, the equipment used for applying pesticide shall be inspected for leaks, clogging, wear, or damage. Any repairs are to be performed immediately.

3.8 RESTORATION AND CLEAN UP

3.8.1 Restoration

Turf areas, pavements and facilities that have been damaged from the planting operation shall be restored to original condition at the Contractor's expense.

3.8.2 Clean Up

Excess and waste material shall be removed from the installed area and shall be disposed offsite. Adjacent paved areas shall be cleared.

3.9 PLANT ESTABLISHMENT PERIOD

3.9.1 Commencement

Upon completion of the last day of the planting operation, the plant establishment period for maintaining installed plant material in a healthy growing condition shall commence and shall be in effect for the remaining contract time period, not to exceed 12 months. Written calendar time period shall be furnished for the plant establishment period. When there is more than one plant establishment period, the boundaries of the planted area covered for each period shall be described. The plant establishment period shall be coordinated with Sections 02921 SEEDING; and 02922 SODDING. The plant establishment period shall be modified for inclement weather shut down periods, or for separate completion dates for areas.

3.9.2 Maintenance During Establishment Period

Maintenance of plant material shall include straightening plant material, straightening stakes; tightening guying material; correcting girdling; supplementing mulch; pruning dead or broken branch tips; maintaining plant material labels; watering; eradicating weeds, insects and disease; post-fertilization; and removing and replacing unhealthy plants.

3.9.2.1 Watering Plant Material

The plant material shall be watered as necessary to prevent desiccation and to maintain an adequate supply of moisture within the root zone. An adequate supply of moisture is estimated to be the equivalent of 1 inch absorbed water per week, delivered in the form of rain or augmented by watering. Run-off, puddling and wilting shall be prevented. Unless otherwise directed, watering trucks shall not be driven over turf areas. Watering of other adjacent areas or existing plant material shall be prevented.

3.9.2.2 Weeding

Grass and weeds in the installed areas shall not be allowed to reach a maximum 3 inches height before being completely removed, including the root system.

3.9.2.3 Pesticide Treatment

Treatment for disease or pest shall be in accordance with paragraph APPLICATION OF PESTICIDE.

3.9.2.4 Post-Fertilization

The plant material shall be topdressed at least once during the period of establishment with controlled release fertilizer, reference paragraph SOIL AMENDMENTS. Apply at the rate of 2 pounds per 100 square feet of plant pit or bed area. Dry fertilizer adhering to plants shall be flushed off. The application shall be timed prior to the advent of winter dormancy.

3.9.2.5 Plant Pit Settling

When settling occurs to the backfill soil mixture, additional backfill soil shall be added to the plant pit or plant bed until the backfill level is equal to the surrounding grade. Serious settling that affects the setting of the plant in relation to the maximum depth at which it was grown requires replanting in accordance with paragraph INSTALLATION. The earth berm shall be maintained.

3.9.2.6 Maintenance Record

A record shall be furnished describing the maintenance work performed, the quantity of plant losses, diagnosis of the plant loss, and the quantity of replacements made on each site visit.

3.9.3 Unhealthy Plant Material

A tree shall be considered unhealthy or dead when the main leader has died back, or up to a maximum 25 percent of the crown has died. A shrub shall be considered unhealthy or dead when up to a maximum 25 percent of the plant has died. This condition shall be determined by scraping on a branch an area 1/16 inch square, maximum, to determine if there is a green cambium layer below the bark. The Contractor shall determine the cause for unhealthy plant material and shall provide recommendations for replacement. Unhealthy or dead plant material shall be removed immediately and shall be replaced as soon as seasonal conditions permit.

3.9.4 Replacement Plant Material

Unless otherwise directed, plant material shall be provided for replacement in accordance with paragraph PLANT MATERIAL. Replacement plant material

shall be installed in accordance with paragraph INSTALLATION, and recommendations in paragraph PLANT ESTABLISHMENT PERIOD. Plant material shall be replaced in accordance with paragraph WARRANTY. An extended plant establishment period shall not be required for replacement plant material.

3.9.5 Maintenance Instructions

Written instructions shall be furnished containing drawings and other necessary information for year-round care of the installed plant material; including, when and where maintenance should occur, and the procedures for plant material replacement,.

-- End of Section --

SECTION TABLE OF CONTENTS

DIVISION 03 - CONCRETE

SECTION 03101

STRUCTURAL CONCRETE FORMWORK

05/98

PART 1 GENERAL

1.1 REFERENCES
1.2 Not Used
1.3 DESIGN

PART 2 PRODUCTS

2.1 FORM MATERIALS
2.1.1 Forms For Class B Finish
2.1.2 Not Used
2.1.3 Forms For Class D Finish
2.1.4 Not Used
2.1.5 Not Used
2.1.6 Form Ties
2.1.7 Form Releasing Agents

PART 3 EXECUTION

3.1 INSTALLATION
3.1.1 Formwork
3.2 CHAMFERING
3.3 COATING
3.4 REMOVAL OF FORMS

-- End of Section Table of Contents --

SECTION 03101

STRUCTURAL CONCRETE FORMWORK
05/98

PART 1 GENERAL

1.1 REFERENCES

The publications listed below form a part of this specification to the extent referenced. The publications are referred to in the text by basic designation only.

ACI INTERNATIONAL (ACI)

ACI 347R	(1994) Guide to Formwork for Concrete

DEPARTMENT OF COMMERCE (DOC)

DOC PS 1	(1996) Voluntary Product Standard - Construction and Industrial Plywood

1.2 Not Used

1.3 DESIGN

Formwork shall be designed in accordance with methodology of ACI 347R for anticipated loads, lateral pressures, and stresses. Forms shall be capable of producing a surface which meets the requirements of the class of finish specified in Section 03300 CAST-IN-PLACE STRUCTURAL CONCRETE. Forms shall be capable of withstanding the pressures resulting from placement and vibration of concrete.

PART 2 PRODUCTS

2.1 FORM MATERIALS

2.1.1 Forms For Class B Finish

Forms for Class B finished surfaces shall be plywood panels conforming to DOC PS 1, Grade B-B concrete form panels, Class I or II. Other form materials or liners may be used provided the smoothness and appearance of concrete produced will be equivalent to that produced by the plywood concrete form panels. Forms for round columns shall be the prefabricated seamless type.

2.1.2 Not Used

2.1.3 Forms For Class D Finish

Forms for Class D finished surfaces, except where concrete is placed against earth, shall be wood or steel or other approved concrete form material.

2.1.4 Not Used

2.1.5 Not Used

2.1.6 Form Ties

Form ties shall be factory-fabricated metal ties, shall be of the removable or internal disconnecting or snap-off type, and shall be of a design that will not permit form deflection and will not spall concrete upon removal. Solid backing shall be provided for each tie. Except where removable tie rods are used, ties shall not leave holes in the concrete surface less than (1/4 inch) nor more than (1 inch) deep and not more than (1 inch) in diameter. Removable tie rods shall be not more than (1-1/2 inches) in diameter.

2.1.7 Form Releasing Agents

Form releasing agents shall be commercial formulations that will not bond with, stain or adversely affect concrete surfaces. Agents shall not impair subsequent treatment of concrete surfaces depending upon bond or adhesion nor impede the wetting of surfaces to be cured with water or curing compounds.

PART 3 EXECUTION

3.1 INSTALLATION

3.1.1 Formwork

Forms shall be mortar tight, properly aligned and adequately supported to produce concrete surfaces meeting the surface requirements specified in Section 03300 CAST-IN-PLACE STRUCTURAL CONCRETE and conforming to construction tolerance given in TABLE 1. Where concrete surfaces are to have a Class B finish, joints in form panels shall be arranged as approved. Where forms for continuous surfaces are placed in successive units, the forms shall fit over the completed surface to obtain accurate alignment of the surface and to prevent leakage of mortar. Forms shall not be reused if there is any evidence of surface wear and tear or defects which would impair the quality of the surface. Surfaces of forms to be reused shall be cleaned of mortar from previous concreting and of all other foreign material before reuse. Form ties that are to be completely withdrawn shall be coated with a nonstaining bond breaker.

3.2 CHAMFERING

Except as otherwise shown, external corners that will be exposed shall be chamfered, beveled, or rounded by moldings placed in the forms.

3.3 COATING

Forms for Class B finished surfaces shall be coated with a form releasing agent before the form or reinforcement is placed in final position. The coating shall be used as recommended in the manufacturer's printed or written instructions. Forms for Class D finished surfaces may be wet with water in lieu of coating immediately before placing concrete, except that in cold weather with probable freezing temperatures, coating shall be mandatory. Surplus coating on form surfaces and coating on reinforcing steel and construction joints shall be removed before placing concrete.

3.4 REMOVAL OF FORMS

Forms shall be removed preventing injury to the concrete and ensuring the complete safety of the structure. Formwork for columns, walls, side of beams and other parts not supporting the weight of concrete may be removed when the concrete has attained sufficient strength to resist damage from the removal operation but not before at least 24 hours has elapsed since concrete placement. Supporting forms and shores shall not be removed from beams, floors and walls until the structural units are strong enough to carry their own weight and any other construction or natural loads. Supporting forms or shores shall not be removed before the concrete strength has reached 70 percent of design strength, as determined by field cured cylinders or other approved methods. This strength shall be demonstrated by job-cured test specimens, and by a structural analysis considering the proposed loads in relation to these test strengths and the strength of forming and shoring system. The job-cured test specimens for form removal purposes shall be provided in numbers as directed and shall be in addition to those required for concrete quality control. The specimens shall be removed from molds at the age of 24 hours and shall receive, insofar as possible, the same curing and protection as the structures they represent.

TABLE 1

TOLERANCES FOR FORMED SURFACES

1. Variations from the plumb:	In any 3 m(10 feet) of length ---------- 6 mm (1/4 inch)
a. In the lines and surfaces of columns, piers, walls and in arises	Maximum for entire length ---------- 25 mm(1 inch)
b. For exposed corner columns,control-joint grooves, and other conspicuous lines	In any 6 m (20 feet) of length ---------- ---- 6 mm (1/4 inch) Maximum for entire length---------- 13 mm (1/2 inch)
2. Variation from the level or from the grades indicated on the drawings:	In any 3 m (10 feet) of length ----------6 mm (1/4 inch) In any bay or in any 6 m (20 feet) of length---------- 10 mm(3/8 inch)
a. In slab soffits, ceilings, beam soffits, and in arises, measured before removal of supporting shores	Maximum for entire length ---------- 20 mm (3/4 inch)
b. In exposed lintels, sills, parapets, horizontal grooves, and other conspicuous lines	In any bay or in any 6 m (20 feet) of length ---------- ----- 6 mm (1/4 inch) Maximum for entire length---------- 13 mm (1/2 inch)
3. Variation of the linear building lines from established position	In any 6 m(20 feet) -----13 mm(1/2 inch Maximum ----------25 mm (1 inch)

TABLE 1

TOLERANCES FOR FORMED SURFACES

in plan	
4. Variation of distance between walls, columns, partitions	6 mm (1/4 inch) per 3 m (10 feet) of distance, but not more than 13 mm (1/2 inch) in any one bay,and not more than 25 mm (1 inch) total variation
5. Variation in the sizes and locations of sleeves, floor openings, and wall opening	Minus ---------- 6 mm (1/4 inch) Plus ---------- 13 mm (1/2 inch)
6. Variation in cross-sectional dimensions of columns and beams and in the thickness of slabs and walls	Minus ---------- 6 mm (1/4 inch) Plus ---------- 13 mm (1/2 inch)
7. Footings:	
a. Variation of dimensions in plan	Minus ---------- 13 mm (1/2 inch) Plus ---------- 50 mm (2 inches) when formed or plus 75 mm (3 inches) when placed against unformed excavation
b. Misplacement of eccentricity	2 percent of the footing width in the direction of misplacement but not more than 50 mm (2 inches)
c. Reduction in thickness of specified thickness	Minus ---------- 5 percent
8. Variation in steps:	Riser ---------- 3mm (1/8 inch)
a. In a flight of stairs	Tread ---------- 6 mm (1/4 inch)
b. In consecutive steps	Riser ---------- 2 mm (1/16 inch) Tread ---------- 3 mm (1/8 inch)

)

-- End of Section --

This page was intentionally left blank for duplex printing.

SECTION TABLE OF CONTENTS

DIVISION 03 - CONCRETE

SECTION 03150

EXPANSION JOINTS AND CONTRACTION JOINTS

05/98

PART 1 GENERAL

1.1 REFERENCES
1.2 Not Used
1.3 DELIVERY AND STORAGE

PART 2 PRODUCTS

2.1 CONTRACTION JOINT STRIPS
2.2 PREFORMED EXPANSION JOINT FILLER
2.3 SEALANT
2.3.1 Preformed Polychloroprene Elastomeric Type
2.3.2 Not Used
2.3.3 Not Used
2.3.4 Field Molded Type

PART 3 EXECUTION

3.1 JOINTS
3.1.1 Contraction Joints
3.1.1.1 Joint Strips
3.1.1.2 Sawed Joints
3.1.2 Expansion Joints
3.1.3 Joint Sealant
3.1.3.1 Not Used
3.1.3.2 Joints With Field-Molded Sealant
3.2 Not Used
3.3 CONSTRUCTION JOINTS

-- End of Section Table of Contents --

SECTION 03150

EXPANSION JOINTS AND CONTRACTION JOINTS
05/98

PART 1 GENERAL

1.1 REFERENCES

The publications listed below form a part of this specification to the extent referenced. The publications are referred to in the text by basic designation only.

AMERICAN HARDBOARD ASSOCIATION (AHA)

AHA ANSI/AHA A135.4	(1995) Basic Hardboard

AMERICAN SOCIETY FOR TESTING AND MATERIALS (ASTM)

ASTM C 919	(1984; R 1992) Use of Sealants in Acoustical Applications
ASTM C 920	(1995) Elastomeric Joint Sealants
ASTM D 1751	(1983; R 1991) Preformed Expansion Joint Filler for Concrete Paving and Structural Construction (Nonextruding and Resilient Bituminous Types)
ASTM D 1752	(1984; R 1996) Preformed Sponge Rubber and Cork Expansion Joint Fillers for Concrete Paving and Structural Construction
ASTM D 2628	(1991) Preformed Polychloroprene Elastomeric Joint Seals for Concrete Pavements
ASTM D 5249	(1995) Backer Material for Use With Cold and Hot-Applied Joint Sealants in Portland-Cement Concrete and Asphalt Joints

1.2 Not Used

1.3 DELIVERY AND STORAGE

Material delivered and placed in storage shall be stored off the ground and protected from moisture, dirt, and other contaminants. Sealants shall be delivered in the manufacturer's original unopened containers. Sealants whose shelf life has expired shall be removed from the site.

PART 2 PRODUCTS

2.1 CONTRACTION JOINT STRIPS

Contraction joint strips shall be 1/8 inch thick tempered hardboard conforming to AHA ANSI/AHA A135.4, Class 1.

2.2 PREFORMED EXPANSION JOINT FILLER

Expansion joint filler shall be preformed material conforming to ASTM D 1751 or ASTM D 1752. Unless otherwise indicated, filler material shall be 3/8 inchthick and of a width applicable for the joint formed. Backer material, when required, shall conform to ASTM D 5249.

2.3 SEALANT

Joint sealant shall conform to the following:

2.3.1 Preformed Polychloroprene Elastomeric Type

ASTM D 2628.

2.3.2 Not Used

2.3.3 Not Used

2.3.4 Field Molded Type

ASTM C 920, Type M for horizontal joints or Type NS for vertical joints, Class 25, and Use NT. Bond breaker material shall be polyethylene tape, coated paper, metal foil or similar type materials. The back-up material shall be compressible, non-shrink, nonreactive with sealant, and non-absorptive material type such as extruded butyl or polychloroprene rubber.

PART 3 EXECUTION

3.1 JOINTS

Joints shall be installed at locations indicated and as authorized.

3.1.1 Contraction Joints

Contraction joints may be constructed by inserting tempered hardboard strips into the plastic concrete using a steel parting bar, when necessary, or by cutting the concrete with a saw after concrete has set. Joints shall be approximately (1/8 inch) wide and shall extend into the slab one-fourth the slab thickness, minimum, but not less than (1 inch).

3.1.1.1 Joint Strips

Strips shall be of the required dimensions and as long as practicable. After the first floating, the concrete shall be grooved with a tool at the joint locations. The strips shall be inserted in the groove and depressed until the top edge of the vertical surface is flush with the surface of the slab. The slab shall be floated and finished as specified. Working of the concrete adjacent to the joint shall be the minimum necessary to fill voids and consolidate the concrete. Where indicated, the top portion of the strip shall be sawed out after the curing period to form a recess for sealer. True alignment of the strips shall be maintained during insertion.

3.1.1.2 Sawed Joints

Joint sawing shall be early enough to prevent uncontrolled cracking in the slab, but late enough that this can be accomplished without appreciable spalling. Concrete sawing machines shall be adequate in number and power, and with sufficient replacement blades to complete the sawing at the required rate. Joints shall be cut to true alignment and shall be cut in sequence of concrete placement. Sludge and cutting debris shall be removed.

3.1.2 Expansion Joints

Preformed expansion joint filler shall be used in expansion and isolation joints in slabs around columns and between slabs on grade and vertical surfaces where indicated. The filler shall extend the full slab depth, unless otherwise indicated. The edges of the joint shall be neatly finished with an edging tool of 1/8 inch radius, except where a resilient floor surface will be applied. Where the joint is to receive a sealant, the filler strips shall be installed at the proper level below the finished floor with a slightly tapered, dressed and oiled wood strip temporarily secured to the top to form a recess to the size shown on the drawings. The wood strip shall be removed after the concrete has set. Contractor may opt to use a removable expansion filler cap designed and fabricated for this purpose in lieu of the wood strip. The groove shall be thoroughly cleaned of laitance, curing compound, foreign materials, protrusions of hardened concrete, and any dust which shall be blown out of the groove with oil-free compressed air.

3.1.3 Joint Sealant

Exposed field molded sawed contraction joints and expansion joints in slabs shall be filled with joint sealant, unless otherwise shown. Joint surfaces shall be clean, dry, and free of oil or other foreign material which would adversely affect the bond between sealant and concrete. Joint sealant shall be applied as recommended by the manufacturer of the sealant.

3.1.3.1 Not Used

3.1.3.2 Joints With Field-Molded Sealant

Joints shall not be sealed when the sealant material, ambient air, or concrete temperature is less than 40 degrees F. When the sealants are meant to reduce the sound transmission characteristics of interior walls, ceilings, and floors the guidance provided in ASTM C 919 shall be followed. Joints requiring a bond breaker shall be coated with curing compound or with bituminous paint. Bond breaker and back-up material shall be installed where required. Joints shall be primed and filled flush with joint sealant in accordance with the manufacturer's recommendations.

3.2 Not Used

3.3 CONSTRUCTION JOINTS

Construction joints are specified in Section 03300 CAST-IN-PLACE STRUCTURAL CONCRETE except that construction joints coinciding with expansion and contraction joints shall be treated as expansion or contraction joints as applicable.

-- End of Section --

SECTION TABLE OF CONTENTS

DIVISION 03 - CONCRETE

SECTION 03200

CONCRETE REINFORCEMENT

09/97

PART 1 GENERAL

1.1 REFERENCES
1.2 SUBMITTALS
1.3 WELDING
1.4 DELIVERY AND STORAGE

PART 2 PRODUCTS

2.1 DOWELS
2.2 Not Used
2.3 REINFORCING STEEL
2.4 WELDED WIRE FABRIC
2.5 WIRE TIES
2.6 SUPPORTS
2.7 MICRO-REINFORCEMENT

PART 3 EXECUTION

3.1 REINFORCEMENT
3.1.1 Placement
3.1.2 Splicing
3.2 WELDED-WIRE FABRIC PLACEMENT
3.3 DOWEL INSTALLATION
3.4 MICRO-REINFORCING PLACEMENT

-- End of Section Table of Contents --

SECTION 03200

CONCRETE REINFORCEMENT
09/97

PART 1 GENERAL

1.1 REFERENCES

The publications listed below form a part of this specification to the extent referenced. The publications are referred to in the text by basic designation only.

AMERICAN SOCIETY FOR TESTING AND MATERIALS (ASTM)

ASTM A 53	(1996) Pipe, Steel, Black and Hot-Dipped, Zinc-Coated, Welded and Seamless
ASTM A 82	(1995a) Steel Wire, Plain, for Concrete Reinforcement
ASTM A 185	(1994) Steel Welded Wire Fabric, Plain, for Concrete Reinforcement
ASTM A 615/A 615M	(1996a) Deformed and Plain Billet-Steel Bars for Concrete Reinforcement
ASTM A 675/A 675M	(1990a; R 1995) Steel Bars, Carbon, Hot-Wrought, Special Quality, Mechanical Properties
ASTM A 706/A 706M	(1995b) Low-Alloy Steel Deformed and Plain Bars for Concrete Reinforcement
ASTM A 767/A 767M	(1995) Zinc-Coated (Galvanized) Steel Bars in Concrete Reinforcement
ASTM A 775/A 775M	(1996) Epoxy-Coated Reinforcement Steel Bars
ASTM A 884/A 884M	(1996a) Epoxy-Coated Steel Wire and Welded Wire Fabric for Reinforcement

AMERICAN WELDING SOCIETY (AWS)

AWS D1.4	(1992) Structural Welding Code - Reinforcing Steel

CONCRETE REINFORCING STEEL INSTITUTE (CRSI)

CRSI MSP-1	(1996) Manual of Standard Practice

1.2 SUBMITTALS

Government approval is required for submittals with a "G" designation; submittals not having a "G" designation are for information only. When used, a designation following the "G" designation identifies the office that will review the submittal for the Government. The following shall be submitted in accordance with Section 01330 SUBMITTAL PROCEDURES:

SD-02 Shop Drawings

Concrete Reinforcement System; G-AE.

Detail drawings showing reinforcing steel placement, schedules, sizes, grades, and splicing and bending details. Drawings shall show support details including types, sizes and spacing.

1.3 WELDING

Welders shall be qualified in accordance with AWS D1.4. Qualification test shall be performed at the worksite and the Contractor shall notify the Contracting Officer 24 hours prior to conducting tests. Special welding procedures and welders qualified by others may be accepted as permitted by AWS D1.4.

1.4 DELIVERY AND STORAGE

Reinforcement and accessories shall be stored off the ground on platforms, skids, or other supports.

PART 2 PRODUCTS

2.1 DOWELS

Dowels shall conform to ASTM A 675/A 675M, Grade 80. Steel pipe conforming to ASTM A 53, Schedule 80, may be used as dowels provided the ends are closed with metal or plastic inserts or with mortar.

2.2 Not Used

2.3 REINFORCING STEEL

Reinforcing steel shall be deformed bars conforming to ASTM A 615/A 615M or ASTM A 706/A 706M, Grade 60,sizes as indicated. Cold drawn wire used for spiral reinforcement shall conform to ASTM A 82. In highly corrosive environments or when directed by the Contracting Officer, reinforcing steel shall conform to ASTM A 767/A 767M or ASTM A 775/A 775M as appropriate.

2.4 WELDED WIRE FABRIC

Welded wire fabric shall conform to ASTM A 185 When directed by the Contracting Officer for special applications, welded wire fabric shall conform to ASTM A 884/A 884M.

2.5 WIRE TIES

Wire ties shall be 16 gauge or heavier black annealed steel wire.

2.6 SUPPORTS

Bar supports for formed surfaces shall be designed and fabricated in accordance with CRSI MSP-1 and shall be steel or precast concrete blocks.

Precast concrete blocks shall have wire ties and shall be not less than (4 inches) square when supporting reinforcement on ground. Precast concrete block shall have compressive strength equal to that of the surrounding concrete. Where concrete formed surfaces will be exposed to weather or where surfaces are to be painted, steel supports within (1/2 inch) of concrete surface shall be galvanized, plastic protected or of stainless steel. Concrete supports used in concrete exposed to view shall have the same color and texture as the finish surface. For slabs on grade, supports shall be precast concrete blocks, plastic coated steel fabricated with bearing plates, or specifically designed wire-fabric supports fabricated of plastic.

2.7 MICRO-REINFORCEMENT

Micro-reinforcing system for concrete topping over precast planks shall be 100 percent virgin homopolymer polypropolene fibrillated fibers, MD graded. Containing no reprocessed olefin materials. Micro-reinforcing system shall meet ASTM C1116 Type III and performance level 1.

PART 3 EXECUTION

3.1 REINFORCEMENT

Reinforcement shall be fabricated to shapes and dimensions shown and shall conform to the requirements of (ACI 318/318R). Reinforcement shall be cold bent unless otherwise authorized. Bending may be accomplished in the field or at the mill. Bars shall not be bent after embedment in concrete. Safety caps shall be placed on all exposed ends of vertical concrete reinforcement bars that pose a danger to life safety. Wire tie ends shall face away from the forms.

3.1.1 Placement

Reinforcement shall be free from loose rust and scale, dirt, oil, or other deleterious coating that could reduce bond with the concrete. Reinforcement shall be placed in accordance with (ACI 318/318R) at locations shown plus or minus one bar diameter. Reinforcement shall not be continuous through expansion joints and shall be as indicated through construction or contraction joints. Concrete coverage shall be as indicated or as required by (ACI 318/318R). If bars are moved more than one bar diameter to avoid interference with other reinforcement, conduits or embedded items, the resulting arrangement of bars, including additional bars required to meet structural requirements, shall be approved before concrete is placed.

3.1.2 Splicing

Splices of reinforcement shall conform to (ACI 318/318R) and shall be made only as required or indicated. Splicing shall be by lapping or by mechanical or welded butt connection; except that lap splices shall not be used for bars larger than No. 11 unless otherwise indicated. Welding shall conform to AWS D1.4. Welded butt splices shall be full penetration butt welds. Lapped bars shall be placed in contact and securely tied or spaced transversely apart to permit the embedment of the entire surface of each bar in concrete. Lapped bars shall not be spaced farther apart than one-fifth the required length of lap or (6 inches). Mechanical butt splices shall be in accordance with the recommendation of the manufacturer of the mechanical splicing device. Butt splices shall develop 125 percent of the specified minimum yield tensile strength of the spliced bars or of

the smaller bar in transition splices. Bars shall be flame dried before butt splicing. Adequate jigs and clamps or other devices shall be provided to support, align, and hold the longitudinal centerline of the bars to be butt spliced in a straight line.

3.2 WELDED-WIRE FABRIC PLACEMENT

Welded-wire fabric shall be placed in slabs as indicated. Fabric placed in slabs on grade shall be continuous between expansion, construction, and contraction joints. Fabric placement at joints shall be as indicated. Lap splices shall be made in such a way that the overlapped area equals the distance between the outermost crosswires plus (2 inches). Laps shall be staggered to avoid continuous laps in either direction. Fabric shall be wired or clipped together at laps at intervals not to exceed (4 feet). Fabric shall be positioned by the use of supports.

3.3 DOWEL INSTALLATION

Dowels shall be installed in slabs on grade at locations indicated and at right angles to joint being doweled. Dowels shall be accurately positioned and aligned parallel to the finished concrete surface before concrete placement. Dowels shall be rigidly supported during concrete placement. One end of dowels shall be coated with a bond breaker.

3.4 MICRO-REINFORCING PLACEMENT

Refer to Specification Section 03410, Part 3 for placement requirements for micro-reinforcing in topping slabs.

-- End of Section --

This page was intentionally left blank for duplex printing.

SECTION TABLE OF CONTENTS

DIVISION 03 - CONCRETE

SECTION 03300

CAST-IN-PLACE STRUCTURAL CONCRETE

09/95

PART 1 GENERAL

1.1 REFERENCES
1.2 Not Used
1.3 LUMP SUM CONTRACT
1.4 SUBMITTALS
1.5 QUALIFICATIONS
1.6 Not Used
1.7 Not Used
1.8 GENERAL REQUIREMENTS
1.8.1 Tolerances
1.8.1.1 Floors
1.8.1.2 Not Used
1.8.1.3 Floors by the Straightedge System
1.8.2 Strength Requirements and w/c Ratio
1.8.2.1 Strength Requirements
1.8.2.2 Water-Cement Ratio
1.8.3 Air Entrainment
1.8.4 Slump
1.8.5 Concrete Temperature
1.8.6 Size of Coarse Aggregate
1.8.7 Special Properties and Products
1.9 MIXTURE PROPORTIONS
1.9.1 Proportioning Studies for Normal Weight Concrete
1.9.2 Not Used
1.9.3 Not Used
1.9.4 Average Compressive Strength Required for Mixtures
1.9.4.1 Computations from Test Records
1.9.4.2 Computations without Previous Test Records
1.10 STORAGE OF MATERIALS
1.11 GOVERNMENT ASSURANCE INSPECTION AND TESTING
1.11.1 Materials
1.11.2 Fresh Concrete
1.11.3 Hardened Concrete
1.11.4 Inspection

PART 2 PRODUCTS

2.1 CEMENTITIOUS MATERIALS
2.1.1 Portland Cement
2.1.2 High-Early-Strength Portland Cement
2.1.3 Blended Cements Not Used
2.1.4 Pozzolan (Fly Ash)
2.1.5 Not Used
2.1.6 Not Used
2.2 AGGREGATES

2.2.1 Fine Aggregate
2.2.2 Coarse Aggregate
2.3 CHEMICAL ADMIXTURES
2.3.1 Air-Entraining Admixture
2.3.2 Accelerating Admixture
2.3.3 Water-Reducing or Retarding Admixture
2.3.4 High-Range Water Reducer
2.3.5 Not Used
2.3.6 Not Used
2.3.7 Other Chemical Admixtures
2.4 CURING MATERIALS
2.4.1 Impervious-Sheet
2.4.2 Membrane-Forming Compound
2.4.3 Burlap and Cotton Mat
2.5 WATER
2.6 NONSHRINK GROUT
2.7 NOT USED
2.8 LATEX BONDING AGENT
2.9 EPOXY RESIN
2.10 EMBEDDED ITEMS
2.11 NOT USED
2.12 PERIMETER INSULATION
2.13 VAPOR BARRIER
2.14 JOINT MATERIALS
2.14.1 Joint Fillers and, Sealers
2.14.2 Contraction Joints in Slabs

PART 3 EXECUTION

3.1 PREPARATION FOR PLACING
3.1.1 Foundations
3.1.1.1 Concrete on Earth Foundations
3.1.1.2 Not Used.
3.1.1.3 Excavated Surfaces in Lieu of Forms
3.1.2 Not Used
3.1.3 Vapor Barrier
3.1.4 Perimeter Insulation
3.1.5 Embedded Items
3.2 Not Used
3.3 CONCRETE PRODUCTION
3.4 Not Used.
3.5 Not Used.
3.6 TRANSPORTING CONCRETE TO PROJECT SITE
3.7 CONVEYING CONCRETE ON SITE
3.7.1 Buckets
3.7.2 Transfer Hoppers
3.7.3 Trucks
3.7.4 Chutes
3.7.5 Belt Conveyors
3.7.6 Concrete Pumps
3.8 PLACING CONCRETE
3.8.1 Depositing Concrete
3.8.2 Consolidation
3.8.3 Cold Weather Requirements
3.8.4 Hot Weather Requirements
3.8.5 Prevention of Plastic Shrinkage Cracking
3.8.6 Not Used.
3.8.7 Placing Concrete in Congested Areas
3.8.8 Placing Flowable Concrete

3.9 JOINTS
3.9.1 Construction Joints
3.9.2 Contraction Joints in Slabs on Grade
3.9.3 Expansion Joints
3.9.4 Not Used
3.9.5 Dowels and Tie Bars
3.10 FINISHING FORMED SURFACES
3.10.1 Class B Finish
3.10.2 Class D Finish
3.10.3 Not Used
3.11 REPAIRS
3.11.1 Damp-Pack Mortar Repair
3.11.2 Repair of Major Defects
3.11.2.1 Surface Application of Mortar Repair
3.11.2.2 Repair of Deep and Large Defects
3.12 FINISHING UNFORMED SURFACES
3.12.1 General
3.12.2 Rough Slab Finish
3.12.3 Floated Finish
3.12.4 Troweled Finish
3.12.5 Not Used
3.12.6 Non-Slip Finish
3.12.6.1 Broomed
3.13 Not Used
3.14 Not Used
3.15 CURING AND PROTECTION
3.15.1 General
3.15.2 Moist Curing
3.15.3 Membrane Forming Curing Compounds
3.15.4 Impervious Sheeting
3.15.5 Ponding or Immersion
3.15.6 Cold Weather Curing and Protection
3.16 SETTING BASE PLATES AND BEARING PLATES
3.16.1 Damp-Pack Bedding Mortar
3.16.2 Nonshrink Grout
3.16.2.1 Mixing and Placing of Nonshrink Grout
3.16.2.2 Treatment of Exposed Surfaces
3.17 TESTING AND INSPECTION FOR CONTRACTOR QUALITY CONTROL
3.17.1 Grading and Corrective Action
3.17.1.1 Fine Aggregate
3.17.1.2 Coarse Aggregate
3.17.2 Quality of Aggregates
3.17.3 Scales, Batching and Recording
3.17.4 Batch-Plant Control
3.17.5 Concrete Mixture
3.17.6 Inspection Before Placing
3.17.7 Placing
3.17.8 Vibrators
3.17.9 Curing Inspection
3.17.10 Cold-Weather Protection
3.17.11 Mixer Uniformity
3.17.12 Reports

-- End of Section Table of Contents --

SECTION 03300

CAST-IN-PLACE STRUCTURAL CONCRETE
09/95

PART 1 GENERAL

1.1 REFERENCES

The publications listed below form a part of this specification to the extent referenced. The publications are referred to in the text by basic designation only.

ACI INTERNATIONAL (ACI)

ACI 117/117R	(1990; Errata) Standard Tolerances for Concrete Construction and Materials
ACI 211.1	(1991) Standard Practice for Selecting Proportions for Normal, Heavyweight, and Mass Concrete
ACI 214.3R	(1988) Simplified Version of the Recommended Practice for Evaluation of Strength Test Results
ACI 301	(1996) Standard Specifications for Structural Concrete
ACI 305R	(1991) Hot Weather Concreting
ACI 318/318R	(1995) Building Code Requirements for Reinforced Concrete and Commentary

AMERICAN ASSOCIATION OF STATE HIGHWAY AND TRANSPORTATION OFFICIALS (AASHTO)

AASHTO M 182	(1991) Burlap Cloth Made From Jute or Kenaf

AMERICAN SOCIETY FOR TESTING AND MATERIALS (ASTM)

ASTM C 31	(1991) Making and Curing Concrete Test Specimens in the Field
ASTM C 33	(1993) Concrete Aggregates
ASTM C 39	(1994) Compressive Strength of Cylindrical Concrete Specimens
ASTM C 42	(1994) Obtaining and Testing Drilled Cores and Sawed Beams of Concrete
ASTM C 78	(1994) Flexural Strength of Concrete (Using Simple Beam With Third-Point Loading)

ASTM C 94	(1996) Ready-Mixed Concrete
ASTM C 136	(1995a) Sieve Analysis of Fine and Coarse Aggregates
ASTM C 143	(1990a) Slump of Hydraulic Cement Concrete
ASTM C 150	(1995) Portland Cement
ASTM C 171	(1995) Sheet Materials for Curing Concrete
ASTM C 172	(1990) Sampling Freshly Mixed Concrete
ASTM C 173	(1994a) Air Content of Freshly Mixed Concrete by the Volumetric Method
ASTM C 192	(1990a) Making and Curing Concrete Test Specimens in the Laboratory
ASTM C 231	(1991b) Air Content of Freshly Mixed Concrete by the Pressure Method
ASTM C 260	(1995) Air-Entraining Admixtures for Concrete
ASTM C 309	(1995) Liquid Membrane-Forming Compounds for Curing Concrete
ASTM C 494	(1992) Chemical Admixtures for Concrete
ASTM C 578	(1995) Rigid, Cellular Polystyrene Thermal Insulation
ASTM C 618	(1996a) Coal Fly Ash and Raw or Calcined Natural Pozzolan for Use as a Mineral Admixture in Portland Cement Concrete
ASTM C 881	(1990) Epoxy-Resin-Base Bonding Systems for Concrete
ASTM C 1017	(1992) Chemical Admixtures for Use in Producing Flowing Concrete
ASTM C 1059	(1991) Latex Agents for Bonding Fresh to Hardened Concrete
ASTM C 1064	(1986; R 1993) Temperature of Freshly Mixed Portland Cement Concrete
ASTM C 1077	(1995a) Laboratories Testing Concrete and Concrete Aggregates for Use in Construction and Criteria for Laboratory Evaluation
ASTM C 1107	(1991a) Packaged Dry, Hydraulic-Cement Grout (Nonshrink)
ASTM D 75	(1987; R 1992) Sampling Aggregates

ASTM D 1751	(1983; R 1991) Preformed Expansion Joint Filler for Concrete Paving and Structural Construction (Nonextruding and Resilient Bituminous Types)
ASTM D 1752	(1984; R 1992) Preformed Sponge Rubber and Cork Expansion Joint Fillers for Concrete Paving and Structural Construction
ASTM E 96	(1995) Water Vapor Transmission of Materials

CORPS OF ENGINEERS (COE)

COE CRD-C 104	(1980) Method of Calculation of the Fineness Modulus of Aggregate
COE CRD-C 400	(1963) Requirements for Water for Use in Mixing or Curing Concrete
COE CRD-C 521	(1981) Standard Test Method for Frequency and Amplitude of Vibrators for Concrete
COE CRD-C 540	(1971; R 1981) Standard Specification for Nonbituminous Inserts for Contraction Joints in Portland Cement Concrete Airfield Pavements, Sawable Type
COE CRD-C 572	(1974) Corps of Engineers Specifications for Polyvinylchloride Waterstop

NATIONAL READY-MIXED CONCRETE ASSOCIATION (NRMCA)

NRMCA TMMB-01	(1992) Truck Mixer Agitator and Front Discharge Concrete Carrier Standards of the Truck Mixer Manufacturers Bureau
NRMCA CPMB 100	(1990) Concrete Plant Standards
NRMCA QC 3	(1984) Quality Control Manual: Section 3, Plant Certifications Checklist: Certification of Ready Mixed Concrete Production Facilities

1.2 Not Used

1.3 LUMP SUM CONTRACT

Under this type of contract concrete items will be paid for by lump sum and will not be measured. The work covered by these items consists of furnishing all concrete materials, reinforcement, miscellaneous embedded materials, and equipment, and performing all labor for the forming, manufacture, transporting, placing, finishing, curing, and protection of concrete in these structures.

1.4 SUBMITTALS

Government approval is required for submittals with a "GA" designation;

submittals having an "FIO" designation are for information only. The following shall be submitted in accordance with Section 01330 SUBMITTAL PROCEDURES:

SD-08 Statements

Mixture Proportions; GA1.

The results of trial mixture design studies along with a statement giving the maximum nominal coarse aggregate size and the proportions of ingredients that will be used in the manufacture of each strength or class of concrete, at least 14 days prior to commencing concrete placing operations. Aggregate weights shall be based on the saturated surface dry condition. The statement shall be accompanied by test results from an approved independent commercial testing laboratory, showing that mixture design studies have been made with materials proposed for the project and that the proportions selected will produce concrete of the qualities indicated. No substitutions shall be made in the materials used in the mixture design studies without additional tests to show that the quality of the concrete is satisfactory.

SD-09 Reports

Testing and Inspection for Contractor Quality Control; FIO.

Certified copies of laboratory test reports, including mill tests and all other test data, for portland cement, blended cement, pozzolan, ground granulated blast furnace slag, silica fume, aggregate, admixtures, and curing compound proposed for use on this project.

1.5 QUALIFICATIONS

Contractor Quality Control personnel assigned to concrete construction shall be American Concrete Institute (ACI) Certified Workmen in one of the following grades or shall have written evidence of having completed similar qualification programs:

Concrete Field Testing Technician, Grade I
Concrete Laboratory Testing Technician, Grade I or II
Concrete Construction Inspector, Level II

The foreman or lead journeyman of the flatwork finishing crew shall have similar qualification for ACI Concrete Flatwork Technician/Finisher or equal, with written documentation.

1.6 Not Used

1.7 Not Used

1.8 GENERAL REQUIREMENTS

1.8.1 Tolerances

Except as otherwise specified herein, tolerances for concrete batching, mixture properties, and construction as well as definition of terms and application practices shall be in accordance with ACI 117/117R. Level and grade tolerance measurements of slabs shall be made as soon as possible after finishing; when forms or shoring are used, the measurements shall be made prior to removal.

1.8.1.1 Floors

For the purpose of this Section the following terminology correlation between ACI 117/117R and this Section shall apply:

Floor Profile Quality Classification From ACI 117/117R	This Section
Conventional Bullfloated	Same
Conventional Straightedged	Same
Flat	Float Finish or Trowel Finish
Very Flat	Same. Use only with F-system

Levelness tolerance shall not apply where design requires floors to be sloped to drains or sloped for other reasons.

1.8.1.2 Not Used

1.8.1.3 Floors by the Straightedge System

The flatness of the floors shall be carefully controlled and the tolerances shall be measured by the straightedge system as specified in paragraph 4.5.7 of ACI 117/117R, using a (10 foot) straightedge, within 72 hours after floor slab installation and before shores and/or forms are removed. The listed tolerances shall be met at any and every location at which the straightedge can be placed.

Trowel Finish 3mm (1/8 inch)

1.8.2 Strength Requirements and w/c Ratio

1.8.2.1 Strength Requirements

Specified compressive strength (f'c) shall be as follows:

COMPRESSIVE STRENGTH	STRUCTURE OR PORTION OF STRUCTURE
(3500 psi) at 28 days	All Concrete

Concrete made with high-early strength cement shall have a 7-day strength equal to the specified 28-day strength for concrete made with Type I or II portland cement. Compressive strength shall be determined in accordance with ASTM C 39.

a. Evaluation of Concrete Compressive Strength. Compressive strength specimens ((6 by 12 inch) cylinders) shall be fabricated by the Contractor and laboratory cured in accordance with ASTM C 31 and tested in accordance with ASTM C 39. The strength of the concrete will be considered satisfactory so long as the average of all sets of three consecutive test results equals or exceeds the specified compressive strength f'c and no individual test result falls below the specified strength f'c by more than (500 psi). A "test" is defined as the average of two companion cylinders, or if only one cylinder is tested, the results of the single cylinder test. Additional analysis or testing, including taking cores and/or load tests may be required at the Contractor's expense when the strength of the concrete in the structure is considered

potentially deficient.

b. Investigation of Low-Strength Compressive Test Results. When any strength test of standard-cured test cylinders falls below the specified strength requirement by more than (500 psi) or if tests of field-cured cylinders indicate deficiencies in protection and curing, steps shall be taken to assure that the load-carrying capacity of the structure is not jeopardized. When the strength of concrete in place is considered potentially deficient, cores shall be obtained and tested in accordance with ASTM C 42. At least three representative cores shall be taken from each member or area of concrete in place that is considered potentially deficient. The location of cores will be determined by the Contracting Officer to least impair the strength of the structure. Concrete in the area represented by the core testing will be considered adequate if the average strength of the cores is equal to at least 85 percent of the specified strength requirement and if no single core is less than 75 percent of the specified strength requirement. Non-destructive tests (tests other than test cylinders or cores) shall not be used as a basis for acceptance or rejection. The Contractor shall perform the coring and repair the holes. Cores will be tested by the Government.

c. Load Tests. If the core tests are inconclusive or impractical to obtain or if structural analysis does not confirm the safety of the structure, load tests may be directed by the Contracting Officer in accordance with the requirements of ACI 318/318R. Concrete work evaluated by structural analysis or by results of a load test as being understrength shall be corrected in a manner satisfactory to the Contracting Officer. All investigations, testing, load tests, and correction of deficiencies shall be performed by and at the expense of the Contractor and must be approved by the Contracting Officer, except that if all concrete is found to be in compliance with the drawings and specifications, the cost of investigations, testing, and load tests will be at the expense of the Government.

1.8.2.2 Water-Cement Ratio

Maximum water-cement ratio (w/c) for normal weight concrete shall be as follows:

WATER-CEMENT RATIO, BY WEIGHT	STRUCTURE OR PORTION OF STRUCTURE
0.45	Slabs
0.50	All Other Concrete

These w/c's may cause higher strengths than that required above for compressive or flexural strength. The maximum w/c required will be the equivalent w/c as determined by conversion from the weight ratio of water to cement plus pozzolan, by the weight equivalency method as described in ACI 211.1.

1.8.3 Air Entrainment

All concrete shall be air entrained except for interior flatwork, interior walls, curbs, exterior footings below frostline and interior footings.

Concrete shall contain between 5 and 7 percent total air, except that when the nominal maximum size coarse aggregate is (3/4 inch) or smaller it shall be between 6.5 and 8.5 percent. Specified air content shall be attained at point of placement into the forms. Air content for normal weight concrete shall be determined in accordance with ASTM C 231.

1.8.4 Slump

Slump of the concrete, as delivered to the point of placement into the forms, shall be within the following limits. Slump shall be determined in accordance with ASTM C 143.

Structural Element	Slump Minimum	Slump Maximum
Walls, columns and beams	(2 in).	(4 in).
Foundation walls, substructure walls, footings, slabs	(1 in).	(3 in).
Any structural concrete approved for placement by pumping:		
At pump	(2 in).	(6 in).
At discharge of line	(1 in).	(4 in).

When use of a plasticizing admixture conforming to ASTM C 1017 or when a Type F or G high range water reducing admixture conforming to ASTM C 494 is permitted to increase the slump of concrete, concrete shall have a slump of (2 to 4 inches) before the admixture is added and a maximum slump of (8 inches) at the point of delivery after the admixture is added.

1.8.5 Concrete Temperature

The temperature of the concrete as delivered shall not exceed (90 degrees F). When the ambient temperature during placing is (40 degrees F) or less, or is expected to be at any time within 6 hours after placing, the temperature of the concrete as delivered shall be between (55 and 75 degrees F).

1.8.6 Size of Coarse Aggregate

The largest feasible nominal maximum size aggregate (NMSA) specified in paragraph AGGREGATES shall be used in each placement. However, nominal maximum size of aggregate shall not exceed any of the following: three-fourths of the minimum cover for reinforcing bars, three-fourths of the minimum clear spacing between reinforcing bars, one-fifth of the narrowest dimension between sides of forms, or one-third of the thickness of slabs or toppings.

1.8.7 Special Properties and Products

Concrete may contain admixtures other than air entraining agents, such as water reducers, superplasticizers, or set retarding agents to provide special properties to the concrete, if specified or approved. Any of these materials to be used on the project shall be used in the mix design studies.

1.9 MIXTURE PROPORTIONS

Concrete shall be composed of portland cement, other cementitious and pozzolanic materials as specified, aggregates, water and admixtures as specified.

1.9.1 Proportioning Studies for Normal Weight Concrete

Trial design batches, mixture proportioning studies, and testing requirements for various classes and types of concrete specified shall be the responsibility of the Contractor. Mixture proportions shall be based on compressive strength as determined by test specimens fabricated in accordance with ASTM C 192 and tested in accordance with ASTM C 39. Samples of all materials used in mixture proportioning studies shall be representative of those proposed for use in the project and shall be accompanied by the manufacturer's or producer's test reports indicating compliance with these specifications. Trial mixtures having proportions, consistencies, and air content suitable for the work shall be made based on methodology described in ACI 211.1, using at least three different water-cement ratios for each type of mixture, which will produce a range of strength encompassing those required for each class and type of concrete required on the project. The maximum water-cement ratios required in the paragraph Maximum Allowable w/c Ratio will be the equivalent water-cement ratio as determined by conversion from the weight ratio of water to cement plus pozzolan by the weight equivalency method as described in ACI 211.1.

If pozzolan is used in the concrete mixture, the minimum pozzolan content shall be 15 percent by weight of the total cementitious material, and the maximum shall be 25 percent. Laboratory trial mixtures shall be designed for maximum permitted slump and air content. Separate sets of trial mixture studies shall be made for each combination of cementitious materials and each combination of admixtures proposed for use. No combination of either shall be used until proven by such studies, except that, if approved in writing and otherwise permitted by these specifications, an accelerator or a retarder may be used without separate trial mixture study. Separate trial mixture studies shall also be made for concrete for any conveying or placing method proposed which requires special properties and for concrete to be placed in unusually difficult placing locations. The temperature of concrete in each trial batch shall be reported. For each water-cement ratio, at least three test cylinders for each test age shall be made and cured in accordance with ASTM C 192. They shall be tested at 7 and 28 days in accordance with ASTM C 39. From these test results, a curve shall be plotted showing the relationship between water-cement ratio and strength for each set of trial mix studies. In addition, a curve shall be plotted showing the relationship between 7 day and 28 day strengths. Each mixture shall be designed to promote easy and suitable concrete placement, consolidation and finishing, and to prevent segregation and excessive bleeding.

1.9.2 Not Used

1.9.3 Not Used

1.9.4 Average Compressive Strength Required for Mixtures

The mixture proportions selected during mixture design studies shall produce a required average compressive strength (f'cr) exceeding the specified compressive strength (f'c) by the amount indicated below. This required average compressive strength, f'cr, will not be a required acceptance criteria during concrete production. However, whenever the daily average compressive strength at 28 days drops below f'cr during concrete production, or daily average 7-day strength drops below a strength

correlated with the 28-day f'cr, the mixture shall be adjusted, as approved, to bring the daily average back up to f'cr. During production, the required f'cr shall be adjusted, as appropriate, based on the standard deviation being attained on the job.

1.9.4.1 Computations from Test Records

Where a concrete production facility has test records, a standard deviation shall be established in accordance with the applicable provisions of ACI 214.3R. Test records from which a standard deviation is calculated shall represent materials, quality control procedures, and conditions similar to those expected; shall represent concrete produced to meet a specified strength or strengths (f'c) within (1,000 psi) of that specified for proposed work; and shall consist of at least 30 consecutive tests. A strength test shall be the average of the strengths of two cylinders made from the same sample of concrete and tested at 28 days. Required average compressive strength f'cr used as the basis for selection of concrete proportions shall be the larger of the equations that follow using the standard deviation as determined above:

(f'cr = f'c + 1.34S where units are in psi)

(f'cr = f'c + 2.33S - 500 where units are in psi)

Where S = standard deviation

Where a concrete production facility does not have test records meeting the requirements above but does have a record based on 15 to 29 consecutive tests, a standard deviation shall be established as the product of the calculated standard deviation and a modification factor from the following table:

NUMBER OF TESTS	MODIFICATION FACTOR FOR STANDARD DEVIATION
15	1.16
20	1.08
25	1.03
30 or more	1.00

1.9.4.2 Computations without Previous Test Records

When a concrete production facility does not have sufficient field strength test records for calculation of the standard deviation, the required average strength f'cr shall be determined as follows:

a. If the specified compressive strength f'c is less than (3,000 psi),

(f'cr = f'c + 1000 psi)

b. If the specified compressive strength f'c is (3,000 to 5,000 psi),

(f'cr = f'c + 1,200 psi)

c. If the specified compressive strength f'c is over (5,000 psi),

(f'cr = f'c + 1,400 psi)

1.10 STORAGE OF MATERIALS

Cement and other cementitious materials shall be stored in weathertight buildings, bins, or silos which will exclude moisture and contaminants and keep each material completely separated. Aggregate stockpiles shall be arranged and used in a manner to avoid excessive segregation and to prevent contamination with other materials or with other sizes of aggregates. Aggregate shall not be stored directly on ground unless a sacrificial layer is left undisturbed. Reinforcing bars and accessories shall be stored above the ground on platforms, skids or other supports. Other materials shall be stored in such a manner as to avoid contamination and deterioration. Admixtures which have been in storage at the project site for longer than 6 months or which have been subjected to freezing shall not be used unless retested and proven to meet the specified requirements. Materials shall be capable of being accurately identified after bundles or containers are opened.

1.11 GOVERNMENT ASSURANCE INSPECTION AND TESTING

Day-to day inspection and testing shall be the responsibility of the Contractor Quality Control (CQC) staff. However, representatives of the Contracting Officer can and will inspect construction as considered appropriate and will monitor operations of the Contractor's CQC staff. Government inspection or testing will not relieve the Contractor of any of his CQC responsibilities.

1.11.1 Materials

The Government will sample and test aggregates, cementitious materials, other materials, and concrete to determine compliance with the specifications as considered appropriate. The Contractor shall provide facilities and labor as may be necessary for procurement of representative test samples. Samples of aggregates will be obtained at the point of batching in accordance with ASTM D 75. Other materials will be sampled from storage at the jobsite or from other locations as considered appropriate. Samples may be placed in storage for later testing when appropriate.

1.11.2 Fresh Concrete

Fresh concrete will be sampled as delivered in accordance with ASTM C 172 and tested in accordance with these specifications, as considered necessary.

1.11.3 Hardened Concrete

Tests on hardened concrete will be performed by the Government when such tests are considered necessary.

1.11.4 Inspection

Concrete operations may be tested and inspected by the Government as the project progresses. Failure to detect defective work or material will not prevent rejection later when a defect is discovered nor will it obligate the Government for final acceptance.

PART 2 PRODUCTS

2.1 CEMENTITIOUS MATERIALS

Cementitious Materials shall be portland cement, or portland cement in combination with pozzolan and shall conform to appropriate specifications listed below. Use of cementitious materials in concrete which will have surfaces exposed in the completed structure shall be restricted so there is no change in color, source, or type of cementitious material.

2.1.1 Portland Cement

ASTM C 150, Type I with a maximum 15 percent amount of tricalcium aluminate, or Type II

2.1.2 High-Early-Strength Portland Cement

ASTM C 150, Type III with tricalcium aluminate limited to 5 percent. Type III cement shall be used only in isolated instances and only when approved in writing.

2.1.3 Blended Cements Not Used

2.1.4 Pozzolan (Fly Ash)

ASTM C 618, Class C or F with the optional requirements for multiple factor, drying shrinkage, and uniformity from Table 2A of ASTM C 618. . If pozzolan is used, it shall never be less than 15 percent nor more than 25 percent by weight of the total cementitious material.

2.1.5 Not Used

2.1.6 Not Used

2.2 AGGREGATES

Aggregates shall conform to the following.

2.2.1 Fine Aggregate

Fine aggregate shall conform to the quality and gradation requirements of ASTM C 33.

2.2.2 Coarse Aggregate

Coarse aggregate shall conform to ASTM C 33, Class 5S, size designation No. 4 or No. 67.

2.3 CHEMICAL ADMIXTURES

Chemical admixtures, when required or permitted, shall conform to the appropriate specification listed. Admixtures shall be furnished in liquid form and of suitable concentration for easy, accurate control of dispensing.

2.3.1 Air-Entraining Admixture

ASTM C 260 and shall consistently entrain the air content in the specified ranges under field conditions.

2.3.2 Accelerating Admixture

ASTM C 494, Type C or E, except that calcium chloride or admixtures containing calcium chloride shall not be used.

2.3.3 Water-Reducing or Retarding Admixture

ASTM C 494, Type A, B, or D, except that the 6-month and 1-year compressive and flexural strength tests are waived.

2.3.4 High-Range Water Reducer

ASTM C 494, Type F or G, except that the 6-month and 1-year strength requirements are waived. The admixture shall be used only when approved in writing, such approval being contingent upon particular mixture control as described in the Contractor's Quality Control Plan and upon performance of separate mixture design studies.

2.3.5 Not Used

2.3.6 Not Used

2.3.7 Other Chemical Admixtures

Chemical admixtures for use in producing flowing concrete shall comply with ASTM C 1017, Type I or II. These admixtures shall be used only when approved in writing, such approval being contingent upon particular mixture control as described in the Contractor's Quality Control Plan and upon performance of separate mixture design studies.

2.4 CURING MATERIALS

2.4.1 Impervious-Sheet

Impervious-sheet materials shall conform to ASTM C 171, type optional, except, that polyethylene sheet shall not be used.

2.4.2 Membrane-Forming Compound

Membrane-Forming curing compound shall conform to ASTM C 309, Type 1-D or 2, except that only a styrene acrylate or chlorinated rubber compound meeting Class B requirements shall be used for surfaces that are to be painted or are to receive bituminous roofing, or waterproofing, or floors that are to receive adhesive applications of resilient flooring. The curing compound selected shall be compatible with any subsequent paint, roofing, waterproofing, or flooring specified. Nonpigmented compound shall contain a fugitive dye, and shall have the reflective requirements in ASTM C 309 waived.

2.4.3 Burlap and Cotton Mat

Burlap and cotton mat used for curing shall conform to AASHTO M 182.

2.5 WATER

Water for mixing and curing shall be fresh, clean, potable, and free of injurious amounts of oil, acid, salt, or alkali, except that non-potable water may be used if it meets the requirements of COE CRD-C 400.

2.6 NONSHRINK GROUT

Nonshrink grout shall conform to ASTM C 1107 and shall be a commercial formulation suitable for the proposed application.

2.7 NOT USED

2.8 LATEX BONDING AGENT

Latex agents for bonding fresh to hardened concrete shall conform to ASTM C 1059.

2.9 EPOXY RESIN

Epoxy resins for use in repairs shall conform to ASTM C 881, Type V, Grade 2. Class as appropriate to the existing ambient and surface temperatures.

2.10 EMBEDDED ITEMS

Embedded items shall be of the size and type indicated or as needed for the application. Dovetail slots shall be galvanized steel.

2.11 NOT USED

2.12 PERIMETER INSULATION

Perimeter insulation shall be extruded polystyrene conforming to ASTM C 578, Type IV.

2.13 VAPOR BARRIER

Vapor barrier shall be polyethylene sheeting with a minimum thickness of or other equivalent material having a vapor permeance rating not exceeding as determined in accordance with ASTM E 96.

2.14 JOINT MATERIALS

2.14.1 Joint Fillers and, Sealers

Expansion joint fillers shall be preformed non-bituminous materials conforming to ASTM D 1751 orASTM D 1752. Materials for and sealing of joints shall conform to the requirements of Section 07900 JOINT SEALING.

2.14.2 Contraction Joints in Slabs

Sawable type contraction joint inserts shall conform to COE CRD-C 540. Nonsawable joint inserts shall have sufficient stiffness to permit placement in plastic concrete without undue deviation from a straight line and shall conform to the physical requirements of COE CRD-C 540, with the exception of Section 3.4 "Resistance to Sawing". Plastic inserts shall be polyvinyl chloride conforming to the materials requirements of COE CRD-C 572.

PART 3 EXECUTION

3.1 PREPARATION FOR PLACING

Before commencing concrete placement, the following shall be performed. Surfaces to receive concrete shall be clean and free from frost, ice, mud, and water. Forms shall be in place, cleaned, coated, and adequately supported, in accordance with Section 03101 STRUCTURAL CONCRETE FORMWORK.

Reinforcing steel shall be in place, cleaned, tied, and adequately supported, in accordance with Section 03200 CONCRETE REINFORCEMENT. Transporting and conveying equipment shall be in-place, ready for use, clean, and free of hardened concrete and foreign material. Equipment for consolidating concrete shall be at the placing site and in proper working order. Equipment and material for curing and for protecting concrete from weather or mechanical damage shall be at the placing site, in proper working condition and in sufficient amount for the entire placement. When hot, windy conditions during concreting appear probable, equipment and material shall be at the placing site to provide windbreaks, shading, fogging, or other action to prevent plastic shrinkage cracking or other damaging drying of the concrete.

3.1.1 Foundations

3.1.1.1 Concrete on Earth Foundations

Earth (subgrade, base, or subbase courses) surfaces upon which concrete is to be placed shall be clean, damp, and free from debris, frost, ice, and standing or running water. Prior to placement of concrete, the foundation shall be well drained and shall be satisfactorily graded and uniformly compacted.

3.1.1.2 Not Used.

3.1.1.3 Excavated Surfaces in Lieu of Forms

Concrete for footings may be placed directly against the soil provided the earth or rock has been carefully trimmed, is uniform and stable, and meets the compaction requirements of Section 02315 EXCAVATION, FILLING, AND BACKFILLING FOR BUILDINGS. The concrete shall be placed without becoming contaminated by loose material, and the outline of the concrete shall be within the specified tolerances.

3.1.2 Not Used

3.1.3 Vapor Barrier

Vapor barrier shall be provided beneath the interior on-grade concrete floor slabs. The greatest widths and lengths practicable shall be used to eliminate joints wherever possible. Joints shall be lapped a minimum of (12 inches). Torn, punctured, or damaged vapor barrier material shall be removed and new vapor barrier shall be provided prior to placing concrete. For minor repairs, patches may be made using laps of at least (12 inches). Lapped joints shall be sealed and edges patched with pressure-sensitive adhesive or tape not less than (2 inches) wide and compatible with the membrane. Vapor barrier shall be placed directly on underlying subgrade, base course, or capillary water barrier, unless it consists of crushed material or large granular material which could puncture the vapor barrier. In this case, the surface shall be choked with a light layer of sand, as approved, before placing the vapor barrier. A (6 inch) layer of compacted, clean, dry concrete sand (fine aggregate) shall be placed on top of the vapor barrier before placing concrete. Concrete placement shall be controlled so as to prevent damage to the vapor barrier, and to prevent moisture in the covering sand.

3.1.4 Perimeter Insulation

Perimeter insulation shall be installed at locations indicated. Adhesive

shall be used where insulation is applied to the interior surface of foundation walls and may be used for exterior application.

3.1.5 Embedded Items

Before placement of concrete, care shall be taken to determine that all embedded items are firmly and securely fastened in place as indicated on the drawings, or required. Conduit and other embedded items shall be clean and free of oil and other foreign matter such as loose coatings or rust, paint, and scale. The embedding of wood in concrete will be permitted only when specifically authorized or directed. Voids in sleeves, inserts, and anchor slots shall be filled temporarily with readily removable materials to prevent the entry of concrete into voids. Welding shall not be performed on embedded metals within (1 feet) of the surface of the concrete. Tack welding shall not be performed on or to embedded items.

3.2 Not Used

3.3 CONCRETE PRODUCTION

Batch-type equipment shall be used for producing concrete. Ready-mixed concrete shall be batched, mixed, and transported in accordance with ASTM C 94, except as otherwise specified. Truck mixers shall comply with NRMCA TMMB-01. Ready-mix plant equipment and facilities shall be certified in accordance with NRMCA QC 3. Approved batch tickets shall be furnished for each load of ready-mixed concrete. Site-mixed concrete shall be produced in accordance with ACI 301, and plant shall conform to NRMCA CPMB 100.

3.4 Not Used.

3.5 Not Used.

3.6 TRANSPORTING CONCRETE TO PROJECT SITE

Concrete shall be transported to the placing site in truck mixers .

3.7 CONVEYING CONCRETE ON SITE

Concrete shall be conveyed from mixer or transporting unit to forms as rapidly as possible and within the time interval specified by methods which will prevent segregation or loss of ingredients using following equipment. Conveying equipment shall be cleaned before each placement.

3.7.1 Buckets

The interior hopper slope shall be not less than 58 degrees from the horizontal, the minimum dimension of the clear gate opening shall be at least 5 times the nominal maximum-size aggregate, and the area of the gate opening shall not be less than (2 square feet). The maximum dimension of the gate opening shall not be greater than twice the minimum dimension. The bucket gates shall be essentially grout tight when closed and may be manually, pneumatically, or hydraulically operated except that buckets larger than (2 cubic yards) shall not be manually operated. The design of the bucket shall provide means for positive regulation of the amount and rate of deposit of concrete in each dumping position.

3.7.2 Transfer Hoppers

Concrete may be charged into nonagitating hoppers for transfer to other

conveying devices. Transfer hoppers shall be capable of receiving concrete directly from delivery vehicles and shall have conical-shaped discharge features. The transfer hopper shall be equipped with a hydraulically operated gate and with a means of external vibration to effect complete discharge. Concrete shall not be held in nonagitating transfer hoppers more than 30 minutes.

3.7.3 Trucks

Truck mixers operating at agitating speed or truck agitators used for transporting plant-mixed concrete shall conform to the requirements of ASTM C 94. Nonagitating equipment shall be used only for transporting plant-mixed concrete over a smooth road and when the hauling time is less than 15 minutes. Bodies of nonagitating equipment shall be smooth, watertight, metal containers specifically designed to transport concrete, shaped with rounded corners to minimize segregation, and equipped with gates that will permit positive control of the discharge of the concrete.

3.7.4 Chutes

When concrete can be placed directly from a truck mixer, agitator, or nonagitating equipment, the chutes normally attached to this equipment by the manufacturer may be used. A discharge deflector shall be used when required by the Contracting Officer. Separate chutes and other similar equipment will not be permitted for conveying concrete.

3.7.5 Belt Conveyors

Belt conveyors shall be designed and operated to assure a uniform flow of concrete from mixer to final place of deposit without segregation of ingredients or loss of mortar and shall be provided with positive means, such as discharge baffle or hopper , for preventing segregation of the concrete at the transfer points and the point of placing. Belt conveyors shall be constructed such that the idler spacing shall not exceed (36 inches). The belt speed shall be a minimum of (300 feet) per minute and a maximum of (750 feet) per minute. If concrete is to be placed through installed horizontal or sloping reinforcing bars, the conveyor shall discharge concrete into a pipe or elephant truck that is long enough to extend through the reinforcing bars.

3.7.6 Concrete Pumps

Concrete may be conveyed by positive displacement pump when approved. The pumping equipment shall be piston or squeeze pressure type; pneumatic placing equipment shall not be used. The pipeline shall be rigid steel pipe or heavy-duty flexible hose. The inside diameter of the pipe shall be at least 3 times the nominal maximum-size coarse aggregate in the concrete mixture to be pumped but not less than (4 inches). Aluminum pipe shall not be used.

3.8 PLACING CONCRETE

Mixed concrete shall be discharged within 1-1/2 hours or before the mixer drum has revolved 300 revolutions, whichever comes first after the introduction of the mixing water to the cement and aggregates. When the concrete temperature exceeds (85 degrees F), the time shall be reduced to 45 minutes. Concrete shall be placed within 15 minutes after it has been discharged from the transporting unit. Concrete shall be handled from mixer or transporting unit to forms in a continuous manner until the

approved unit of operation is completed. Adequate scaffolding, ramps and walkways shall be provided so that personnel and equipment are not supported by in-place reinforcement. Placing will not be permitted when the sun, heat, wind, or limitations of facilities furnished by the Contractor prevent proper consolidation, finishing and curing. Sufficient placing capacity shall be provided so that concrete can be kept free of cold joints.

3.8.1 Depositing Concrete

Concrete shall be deposited as close as possible to its final position in the forms, and there shall be no vertical drop greater than (5 feet) except where suitable equipment is provided to prevent segregation and where specifically authorized. Depositing of the concrete shall be so regulated that it will be effectively consolidated in horizontal layers not more than (12 inches) thick, except that all slabs shall be placed in a single layer. Concrete to receive other construction shall be screeded to the proper level. Concrete shall be deposited continuously in one layer or in layers so that fresh concrete is deposited on in-place concrete that is still plastic. Fresh concrete shall not be deposited on concrete that has hardened sufficiently to cause formation of seams or planes of weakness within the section. Concrete that has surface dried, partially hardened, or contains foreign material shall not be used. When temporary spreaders are used in the forms, the spreaders shall be removed as their service becomes unnecessary.

3.8.2 Consolidation

Immediately after placing, each layer of concrete shall be consolidated by internal vibrators, except for slabs (4 inches) thick or less. The vibrators shall at all times be adequate in effectiveness and number to properly consolidate the concrete; a spare vibrator shall be kept at the jobsite during all concrete placing operations. The vibrators shall have a frequency of not less than 10,000 vibrations per minute, an amplitude of at least (0.025 inch), and the head diameter shall be appropriate for the structural member and the concrete mixture being placed. Vibrators shall be inserted vertically at uniform spacing over the area of placement. The distance between insertions shall be approximately 1-1/2 times the radius of action of the vibrator so that the area being vibrated will overlap the adjacent just-vibrated area by a reasonable amount. The vibrator shall penetrate rapidly to the bottom of the layer and at least (6 inches) into the preceding layer if there is such. Vibrator shall be held stationary until the concrete is consolidated and then vertically withdrawn slowly while operating. Form vibrators shall not be used unless specifically approved and unless forms are constructed to withstand their use. Vibrators shall not be used to move concrete within the forms. Slabs (4 inches) and less in thickness shall be consolidated by properly designed vibrating screeds or other approved technique. Excessive vibration of lightweight concrete resulting in segration or flotation of coarse aggregate shall be prevented. Frequency and amplitude of vibrators shall be determined in accordance with COE CRD-C 521. Grate tampers ("jitterbugs") shall not be used.

3.8.3 Cold Weather Requirements

Special protection measures, approved by the Contracting Officer, shall be used if freezing temperatures are anticipated before the expiration of the specified curing period. The ambient temperature of the air where concrete is to be placed and the temperature of surfaces to receive concrete shall

be not less than (40 degrees F.) The temperature of the concrete when placed shall be not less than (50 degrees F) nor more than (75 degrees F.) Heating of the mixing water or aggregates will be required to regulate the concrete placing temperature. Materials entering the mixer shall be free from ice, snow, or frozen lumps. Salt, chemicals or other materials shall not be incorporated in the concrete to prevent freezing. Upon written approval, an accelerating admixture conforming to ASTM C 494, Type C or E may be used, provided it contains no calcium chloride. Calcium chloride shall not be used.

3.8.4 Hot Weather Requirements

When the ambient temperature during concrete placing is expected to exceed (85 degrees F), the concrete shall be placed and finished with procedures previously submitted and as specified herein. The concrete temperature at time of delivery to the forms shall not exceed the temperature shown in the table below when measured in accordance with ASTM C 1064. Cooling of the mixing water or aggregates or placing concrete in the cooler part of the day may be required to obtain an adequate placing temperature. A retarder may be used, as approved, to facilitate placing and finishing. Steel forms and reinforcements shall be cooled as approved prior to concrete placement when steel temperatures are greater than (120 degrees F). Conveying and placing equipment shall be cooled if necessary to maintain proper concrete-placing temperature.

Maximum Allowable Concrete Placing Temperature

Relative Humidity, Percent, During Time of Concrete Placement	Maximum Allowable Concrete Temperature Degrees
Greater than 60	(90 F)
40-60	(85 F)
Less than 40	(80 F)

3.8.5 Prevention of Plastic Shrinkage Cracking

During hot weather with low humidity, and particularly with appreciable wind, as well as interior placements when space heaters produce low humidity, the Contractor shall be alert to the tendency for plastic shrinkage cracks to develop and shall institute measures to prevent this. Particular care shall be taken if plastic shrinkage cracking is potentially imminent and especially if it has developed during a previous placement. Periods of high potential for plastic shrinkage cracking can be anticipated by use of Fig. 2.1.5 of ACI 305R. In addition the concrete placement shall be further protected by erecting shades and windbreaks and by applying fog sprays of water, sprinkling, ponding or wet covering. Plastic shrinkage cracks that occur shall be filled by injection of epoxy resin as directed, after the concrete hardens. Plastic shrinkage cracks shall never be troweled over or filled with slurry.

3.8.6 Not Used.

3.8.7 Placing Concrete in Congested Areas

Special care shall be used to ensure complete filling of the forms, elimination of all voids, and complete consolidation of the concrete when

placing concrete in areas congested with reinforcing bars, embedded items, waterstops and other tight spacing. An appropriate concrete mixture shall be used, and the nominal maximum size of aggregate (NMSA) shall meet the specified criteria when evaluated for the congested area. Vibrators with heads of a size appropriate for the clearances available shall be used, and the consolidation operation shall be closely supervised to ensure complete and thorough consolidation at all points. Where necessary, splices of reinforcing bars shall be alternated to reduce congestion. Where two mats of closely spaced reinforcing are required, the bars in each mat shall be placed in matching alignment to reduce congestion. Reinforcing bars may be temporarily crowded to one side during concrete placement provided they are returned to exact required location before concrete placement and consolidation are completed.

3.8.8 Placing Flowable Concrete

If a plasticizing admixture conforming to ASTM C 1017 is used or if a Type F or G high range water reducing admixture is permitted to increase the slump, the concrete shall meet all requirements of paragraph GENERAL REQUIREMENTS in PART 1. Extreme care shall be used in conveying and placing the concrete to avoid segregation. Consolidation and finishing shall meet all requirements of paragraphs Placing Concrete, Finishing Formed Surfaces, and Finishing Unformed Surfaces. No relaxation of requirements to accommodate flowable concrete will be permitted.

3.9 JOINTS

Joints shall be located and constructed as indicated or approved. Joints not indicated on the drawings shall be located and constructed to minimize the impact on the strength of the structure. In general, such joints shall be located near the middle of the spans of supported slabs, beams, and girders unless a beam intersects a girder at this point, in which case the joint in the girder shall be offset a distance equal to twice the width of the beam. Joints in walls and columns shall be at the underside of floors, slabs, beams, or girders and at the tops of footings or floor slabs, unless otherwise approved. Joints shall be perpendicular to the main reinforcement. All reinforcement shall be continued across joints; except that reinforcement or other fixed metal items shall not be continuous through expansion joints, or through construction or contraction joints in slabs on grade. Reinforcement shall be (2 inches) clear from each jointunless noted otherwise on drawings. Except where otherwise indicated, construction joints between interior slabs on grade and vertical surfaces shall consist of (30 pound) asphalt-saturated felt, extending for the full depth of the slab. The perimeters of the slabs shall be free of fins, rough edges, spalling, or other unsightly appearance. Reservoir for sealant for construction and contraction joints in slabs shall be formed to the dimensions shown on the drawings by sawing sawable inserts, or by sawing to widen the top portion of sawed joints. Joints to be sealed shall be cleaned and sealed as indicated and in accordance with Section 07900 JOINT SEALING.

3.9.1 Construction Joints

For concrete other than slabs on grade, construction joints shall be located so that the unit of operation does not exceed (60 feet). Concrete shall be placed continuously so that each unit is monolithic in construction. Fresh concrete shall not be placed against adjacent hardened concrete until it is at least 24 hours old. Construction joints shall be located as indicated or approved. Where concrete work is interrupted by

weather, end of work shift or other similar type of delay, location and type of construction joint shall be subject to approval of the Contracting Officer. Unless otherwise indicated reinforcing steel shall extend through construction joints. Construction joints in slabs on grade shall be keyed or doweled as shown and shall be located at control joint location shown on drawings. Concrete columns, walls, or piers shall be in place at least 2 hours, or until the concrete begins to lose its plasticity, before placing concrete for beams, girders, or slabs thereon. Where horizontal construction joints in walls or columns are required, a strip of (1 inch) square-edge lumber, bevelled and oiled to facilitate removal, shall be tacked to the inside of the forms at the construction joint. Concrete shall be placed to a point (1 inch) above the underside of the strip. The strip shall be removed 1 hour after the concrete has been placed, and any irregularities in the joint line shall be leveled off with a wood float, and all laitance shall be removed. Prior to placing additional concrete, horizontal construction joints shall be prepared as specified in paragraph Previously Placed Concrete.

3.9.2 Contraction Joints in Slabs on Grade

Contraction joints shall be located and detailed as shown on the drawings. Contraction Joints shall be produced by forming a weakened plane in the concrete slab by use of rigid inserts impressed in the concrete during placing operations or sawing a continuous slot with a concrete saw. Regardless of method used to produce the weakened plane, it shall be 1/4 the depth of the slab thickness and between (1/8 and 3/16 inch) wide. For saw-cut joints, cutting shall be timed properly with the set of the concrete. Cutting shall be started as soon as the concrete has hardened sufficiently to prevent ravelling of the edges of the saw cut. Cutting shall be completed before shrinkage stresses become sufficient to produce cracking. Reservoir for joint sealant shall be formed as previously specified.

3.9.3 Expansion Joints

Installation of expansion joints and sealing of these joints shall conform to the requirements of Section 03150 EXPANSION JOINTS, CONTRACTION JOINTS, AND WATERSTOPS and Section 07900 JOINT SEALING.

3.9.4 Not Used

3.9.5 Dowels and Tie Bars

Dowels and tie bars shall be installed at the locations shown on the drawings and to the details shown, using materials and procedures specified in Section 03200 CONCRETE REINFORCEMENT and herein. Conventional smooth "paving" dowels shall be installed in slabs using approved methods to hold the dowel in place during concreting within a maximum alignment tolerance of (1/8 inch in 12 inches). "Structural" type deformed bar dowels, or tie bars, shall be installed to meet the specified tolerances. Care shall be taken during placing adjacent to and around dowels and tie bars to ensure there is no displacement of the dowel or tie bar and that the concrete completely embeds the dowel or tie bar and is thoroughly consolidated.

3.10 FINISHING FORMED SURFACES

Forms, form materials, and form construction are specified in Section 03101 STRUCTURAL CONCRETE FORMWORK. Finishing of formed surfaces shall be as specified herein. Unless another type of architectural or special finish

is specified, surfaces shall be left with the texture imparted by the forms except that defective surfaces shall be repaired. Unless painting of surfaces is required, uniform color of the concrete shall be maintained by use of only one mixture without changes in materials or proportions for any structure or portion of structure that requires a Class B finish. Except for major defects, as defined hereinafter, surface defects shall be repaired as specified herein within 24 hours after forms are removed. Repairs of the so-called "plaster-type" will not be permitted in any location. Tolerances of formed surfaces shall conform to the requirements of ACI 117/117R. These tolerances apply to the finished concrete surface, not to the forms themselves; forms shall be set true to line and grade. Form tie holes requiring repair and other defects whose depth is at least as great as their surface diameter shall be repaired as specified in paragraph Damp-Pack Mortar Repair. Defects whose surface diameter is greater than their depth shall be repaired as specified in paragraph Repair of Major Defects. Repairs shall be finished flush with adjacent surfaces and with the same surface texture. The cement used for all repairs shall be a blend of job cement with white cement proportioned so that the final color after curing and aging will be the same as the adjacent concrete. Concrete with excessive honeycomb, or other defects which affect the strength of the member, will be rejected. Repairs shall be demonstrated to be acceptable and free from cracks or loose or drummy areas at the completion of the contract and, for Class B Finishes, shall be inconspicuous. Repairs not meeting these requirements will be rejected and shall be replaced.

3.10.1 Class B Finish

Class B finish is required where concrete is exposed to view. Fins, ravelings, and loose material shall be removed, all surface defects over (1/2 inch) in diameter or more than (1/2 inch) deep, shall be repaired and, except as otherwise indicated or as specified in Section 03101 STRUCTURAL CONCRETE FORMWORK, holes left by removal of form ties shall be reamed and filled. Defects more than (1/2 inch) in diameter shall be cut back to sound concrete, but in all cases at least (1 inch) deep. The Contractor shall prepare a sample panel for approval before commencing repair, showing that the surface texture and color match will be attained.

3.10.2 Class D Finish

Class D finish is required for concrete not exposed to view. Fins, ravelings, and loose material shall be removed, and, except as otherwise indicated or as specified in Section 03101 STRUCTURAL CONCRETE FORMWORK, holes left by removal of form ties shall be reamed and filled. Honeycomb and other defects more than (1/2 inch) deep or more than (2 inches) in diameter shall be repaired. Defects more than (2 inches) in diameter shall be cut back to sound concrete, but in all cases at least (1 inch) deep.

3.10.3 Not Used

3.11 REPAIRS

3.11.1 Damp-Pack Mortar Repair

Form tie holes requiring repair and other defects whose depth is at least as great as their surface diameter but not over (4 inches) shall be repaired by the damp-pack mortar method. Form tie holes shall be reamed and other similar defects shall be cut out to sound concrete. The void

shall then be thoroughly cleaned, thoroughly wetted, brush-coated with a thin coat of neat cement grout and filled with mortar. Mortar shall be a stiff mix of 1 part portland cement to 2 parts fine aggregate passing the (No. 16) mesh sieve, and minimum amount of water. Only sufficient water shall be used to produce a mortar which, when used, will stick together on being molded into a ball by a slight pressure of the hands and will not exude water but will leave the hands damp. Mortar shall be mixed and allowed to stand for 30 to 45 minutes before use with remixing performed immediately prior to use. Mortar shall be thoroughly tamped in place in thin layers using a hammer and hardwood block. Holes passing entirely through walls shall be completely filled from the inside face by forcing mortar through to the outside face. All holes shall be packed full. Damp-pack repairs shall be moist cured for at least 48 hours.

3.11.2 Repair of Major Defects

Major defects will be considered to be those more than (1/2 inch) deep or, for Class B finishes, more than (1/2 inch) in diameter and, for Class D finishes, more than (2 inches) in diameter. Also included are any defects of any kind whose depth is over (4 inches) or whose surface diameter is greater than their depth. Major defects shall be repaired as specified below.

3.11.2.1 Surface Application of Mortar Repair

Defective concrete shall be removed, and removal shall extend into completely sound concrete. Approved equipment and procedures which will not cause cracking or microcracking of the sound concrete shall be used. If reinforcement is encountered, concrete shall be removed so as to expose the reinforcement for at least (2 inches) on all sides. All such defective areas greater than (12 square inches) shall be outlined by saw cuts at least (1 inch) deep. Defective areas less than (12 square inches) shall be outlined by a (1 inch) deep cut with a core drill in lieu of sawing. All saw cuts shall be straight lines in a rectangular pattern in line with the formwork panels. After concrete removal, the surface shall be thoroughly cleaned by high pressure washing to remove all loose material. Surfaces shall be kept continually saturated for the first 12 of the 24 hours immediately before placing mortar and shall be damp but not wet at the time of commencing mortar placement. The Contractor, at his option, may use either hand-placed mortar or mortar placed with a mortar gun. If hand-placed mortar is used, the edges of the cut shall be perpendicular to the surface of the concrete. The prepared area shall be brush-coated with a thin coat of neat cement grout. The repair shall then be made using a stiff mortar, preshrunk by allowing the mixed mortar to stand for 30 to 45 minutes and then remixed, thoroughly tamped into place in thin layers. If hand-placed mortar is used, the Contractor shall test each repair area for drumminess by firm tapping with a hammer and shall inspect for cracks, both in the presence of the Contracting Officer's representative, immediately before completion of the contract, and shall replace any showing drumminess or cracking. If mortar placed with a mortar gun is used, the gun shall be a small compressed air-operated gun to which the mortar is slowly hand fed and which applies the mortar to the surface as a high-pressure stream, as approved. Repairs made using shotcrete equipment will not be accepted. The mortar used shall be the same mortar as specified for damp-pack mortar repair. If gun-placed mortar is used, the edges of the cut shall be beveled toward the center at a slope of 1:1. All surface applied mortar repairs shall be continuously moist cured for at least 7 days. Moist curing shall consist of several layers of saturated burlap applied to the surface immediately after placement is complete and

covered with polyethylene sheeting, all held closely in place by a sheet of plywood or similar material rigidly braced against it. Burlap shall be kept continually wet.

3.11.2.2 Repair of Deep and Large Defects

Deep and large defects will be those that are more than (6 inches) deep and also have an average diameter at the surface more than (18 inches) or that are otherwise so identified by the Project Office. Such defectsshall be completely removed and replaced.

3.12 FINISHING UNFORMED SURFACES

The finish of all unformed surfaces shall meet the requirements of paragraph Tolerances in PART 1, when tested as specified herein.

3.12.1 General

The ambient temperature of spaces adjacent to unformed surfaces being finished and of the base on which concrete will be placed shall be not less than (50 degrees F). In hot weather all requirements of paragraphs Hot Weather Requirements and Prevention of Plastic Shrinkage Cracking shall be met. Unformed surfaces that are not to be covered by additional concrete or backfill shall have a float finish, with additional finishing as specified below, and shall be true to the elevation shown on the drawings. Surfaces to receive additional concrete or backfill shall be brought to the elevation shown on the drawings, properly consolidated, and left true and regular. Unless otherwise shown on the drawings, exterior surfaces shall be sloped for drainage, as directed. Where drains are provided, interior floors shall be evenly sloped to the drains. Joints shall be carefully made with a jointing or edging tool. The finished surfaces shall be protected from stains or abrasions. Grate tampers or "jitterbugs" shall not be used for any surfaces. The dusting of surfaces with dry cement or other materials or the addition of any water during finishing shall not be permitted. If bleedwater is present prior to finishing, the excess water shall be carefully dragged off or removed by absorption with porous materials such as burlap. During finishing operations, extreme care shall be taken to prevent over finishing or working water into the surface; this can cause "crazing" (surface shrinkage cracks which appear after hardening) of the surface. Any slabs with surfaces which exhibit significant crazing shall be removed and replaced. During finishing operations, surfaces shall be checked with a 3 m (10 foot) straightedge, applied in both directions at regular intervals while the concrete is still plastic, to detect high or low areas.

3.12.2 Rough Slab Finish

As a first finishing operation for unformed surfaces , the surface shall receive a rough slab finish prepared as follows. The concrete shall be uniformly placed across the slab area, consolidated as previously specified, and then screeded with straightedge strikeoffs immediately after consolidation to bring the surface to the required finish level with no coarse aggregate visible. Side forms and screed rails shall be provided, rigidly supported, and set to exact line and grade. Allowable tolerances for finished surfaces apply only to the hardened concrete, not to forms or screed rails. Forms and screed rails shall be set true to line and grade. "Wet screeds" shall not be used.

3.12.3 Floated Finish

Slabs to receive more than a rough slab finish shall next be given a wood float finish. The screeding shall be followed immediately by darbying or bull floating before bleeding water is present, to bring the surface to a true, even plane. Then, after the concrete has stiffened so that it will withstand a man's weight without imprint of more than (1/4 inch) and the water sheen has disappeared, it shall be floated to a true and even plane free of ridges. Floating shall be performed by use of suitable hand floats or power driven equipment. Sufficient pressure shall be used on the floats to bring a film of moisture to the surface. Hand floats shall be made of wood, magnesium, or aluminum. Lightweight concrete or concrete that exhibits stickiness shall be floated with a magnesium float. Care shall be taken to prevent over-finishing or incorporating water into the surface.

3.12.4 Troweled Finish

All floor slabs and topping slabs shall be given a trowel finish. After floating is complete and after the surface moisture has disappeared, unformed surfaces shall be steel-troweled to a smooth, even, dense finish, free from blemishes including trowel marks. In lieu of hand finishing, an approved power finishing machine may be used in accordance with the directions of the machine manufacturer. Additional trowelings shall be performed, either by hand or machine until the surface has been troweled 3 times, with waiting period between each. Care shall be taken to prevent blistering and if such occurs, troweling shall immediately be stopped and operations and surfaces corrected. A final hard steel troweling shall be done by hand, with the trowel tipped, and using hard pressure, when the surface is at a point that the trowel will produce a ringing sound. The finished surface shall be thoroughly consolidated and shall be essentially free of trowel marks and be uniform in texture and appearance. The concrete mixture used for troweled finished areas shall be adjusted, if necessary, in order to provide sufficient fines (cementitious material and fine sand) to finish properly.

3.12.5 Not Used

3.12.6 Non-Slip Finish

Non-slip floors shall be constructed in accordance with the following subparagraphs.

3.12.6.1 Broomed

All exterior flatwork shall be given a broomed finish. After floating, the surface shall be lightly steel troweled, and then carefully scored by pulling a push-type broom across the surface. Brooming shall be transverse to traffic or at right angles to the slope of the slab. After the end of the curing period, the surface shall be vigorously broomed with a coarse fiber broom to remove all loose or semi-detached particles.

3.13 Not Used

3.14 Not Used

3.15 CURING AND PROTECTION

3.15.1 General

Concrete shall be cured by one of the following approved methods for the

period of time given below:

Concrete with Type III cement	3 days
All other concrete	7 days

Immediately after placement, concrete shall be protected from premature drying, extremes in temperatures, rapid temperature change, mechanical injury and damage from rain and flowing water for the duration of the curing period. Air and forms in contact with concrete shall be maintained at a temperature above (50 degrees F) for the first 3 days and at a temperature above (32 degrees F) for the remainder of the specified curing period. Exhaust fumes from combustion heating units shall be vented to the outside of the enclosure, and heaters and ducts shall be placed and directed so as not to cause areas of overheating and drying of concrete surfaces or to create fire hazards. Materials and equipment needed for adequate curing and protection shall be available and at the site prior to placing concrete. No fire or excessive heat, including welding, shall be permitted near or in direct contact with the concrete at any time. Except as otherwise permitted by paragraph Membrane Forming Curing Compounds, moist curing shall be provided for any areas to receive floor hardener, any paint or other applied coating, or to which other concrete is to be bonded. Except for plastic coated burlap, impervious sheeting shall only be used as an aid, in combination with additional moist-curing procedures permitted by paragraph Moist Curing, to ensure the concrete surfaces are maintained continuously wet.

3.15.2 Moist Curing

Concrete to be moist-cured shall be maintained continuously wet for the entire curing period, commencing immediately after finishing. If water or curing materials used stain or discolor concrete surfaces which are to be permanently exposed, the concrete surfaces shall be cleaned as approved. When wooden forms are left in place during curing, they shall be kept wet at all times. If steel forms are used in hot weather, nonsupporting vertical forms shall be broken loose from the concrete soon after the concrete hardens and curing water continually applied in this void. If the forms are removed before the end of the curing period, curing shall be carried out as on unformed surfaces, using suitable materials. Surfaces shall be cured by ponding, by continuous sprinkling, by continuously saturated burlap or cotton mats, or by continuously saturated plastic coated burlap. Burlap and mats shall be clean and free from any contamination and shall be completely saturated before being placed on the concrete. The Contractor shall have an approved work system to ensure that moist curing is continuous 24 hours per day.

3.15.3 Membrane Forming Curing Compounds

Interior concrete surfaces may be cured with a nonpigmented curing compound containing a fugitive dye in lieu of moist curing. Membrane curing compound shall not be used on surfaces that are to receive any subsequent treatment depending on adhesion or bonding to the concrete, including surfaces to which a smooth finish is to be applied or other concrete to be bonded. However, a styrene acrylate or chlorinated rubber compound meeting ASTM C 309, Class B requirements, may be used for surfaces which are to be painted or are to receive bituminous roofing or waterproofing. The curing compound selected shall be compatible with any subsequent paint, roofing, waterproofing or flooring specified. Membrane curing compound shall not be used on surfaces that are maintained at curing temperatures with free steam. Curing compound shall be applied to formed surfaces immediately

after the forms are removed and prior to any patching or other surface treatment except the cleaning of loose sand, mortar, and debris from the surface. All surfaces shall be thoroughly moistened with water. Curing compound shall be applied to slab surfaces as soon as the bleeding water has disappeared, with the tops of joints being temporarily sealed to prevent entry of the compound and to prevent moisture loss during the curing period. The curing compound shall be applied in a two-coat continuous operation by approved motorized power-spraying equipment operating at a minimum pressure of (75 psi), at a uniform coverage of not more than (400 square feet per gallon) for each coat, and the second coat shall be applied perpendicular to the first coat. Concrete surfaces which have been subjected to rainfall within 3 hours after curing compound has been applied shall be resprayed by the method and at the coverage specified. Surfaces on which clear compound is used shall be shaded from direct rays of the sun for the first 3 days. Surfaces coated with curing compound shall be kept free of foot and vehicular traffic, and from other sources of abrasion and contamination during the curing period.

3.15.4 Impervious Sheeting

Floor slabs to be covered by subsequent finishes may be cured using impervious sheet. However, except for plastic coated burlap, impervious sheeting alone shall not be used for curing. Impervious-sheet curing shall only be used on horizontal or nearly horizontal surfaces. Surfaces shall be thoroughly wetted and be completely covered with the sheeting. Sheeting shall be at least (18 inches) wider than the concrete surface to be covered. Covering shall be laid with light-colored side up. Covering shall be lapped not less than (12 inches) and securely weighted down or shall be lapped not less than (4 inches) and taped to form a continuous cover with completely closed joints. The sheet shall be weighted to prevent displacement so that it remains in contact with the concrete during the specified length of curing. Coverings shall be folded down over exposed edges of slabs and secured by approved means. Sheets shall be immediately repaired or replaced if tears or holes appear during the curing period.

3.15.5 Ponding or Immersion

Concrete shall be continually immersed throughout the curing period. Water shall not be more than (20 degrees F) less than the temperature of the concrete.

3.15.6 Cold Weather Curing and Protection

When the daily ambient low temperature is less than (32 degrees F) the temperature of the concrete shall be maintained above (40 degrees F) for the first seven days after placing. During the period of protection removal, the air temperature adjacent to the concrete surfaces shall be controlled so that concrete near the surface will not be subjected to a temperature differential of more than (25 degrees F) as determined by suitable temperature measuring devices furnished by the Government, as required, and installed adjacent to the concrete surface and (2 inches) inside the surface of the concrete. The installation of the thermometers shall be made by the Contractor as directed.

3.16 SETTING BASE PLATES AND BEARING PLATES

After being properly positioned, column base plates, bearing plates for beams and similar structural members, and machinery and equipment base

plates shall be set to the proper line and elevation with damp-pack bedding mortar, except where nonshrink grout is indicated. The thickness of the mortar or grout shall be approximately 1/24 the width of the plate, but not less than (3/4 inch) unless shown otherwise on drawings. Concrete and metal surfaces in contact with grout shall be clean and free of oil and grease, and concrete surfaces in contact with grout shall be damp and free of laitance when grout is placed. Nonshrink grout shall be used as shown on drawings.

3.16.1 Damp-Pack Bedding Mortar

Damp-pack bedding mortar shall consist of 1 part cement and 2-1/2 parts fine aggregate having water content such that a mass of mortar tightly squeezed in the hand will retain its shape but will crumble when disturbed. The space between the top of the concrete and bottom of the bearing plate or base shall be packed with the bedding mortar by tamping or ramming with a bar or rod until it is completely filled.

3.16.2 Nonshrink Grout

Nonshrink grout shall be a ready-mixed material requiring only the addition of water. Water content shall be the minimum that will provide a flowable mixture and completely fill the space to be grouted without segregation, bleeding, or reduction of strength.

3.16.2.1 Mixing and Placing of Nonshrink Grout

Mixing and placing shall be in conformance with the material manufacturer's instructions and as specified therein. Ingredients shall be thoroughly dry-mixed before adding water. After adding water, the batch shall be mixed for 3 minutes. Batches shall be of size to allow continuous placement of freshly mixed grout. Grout not used within 30 minutes after mixing shall be discarded. The space between the top of the concrete or machinery-bearing surface and the plate shall be filled solid with the grout. Forms shall be of wood or other equally suitable material for completely retaining the grout on all sides and on top and shall be removed after the grout has set. The placed grout shall be carefully worked by rodding or other means to eliminate voids; however, overworking and breakdown of the initial set shall be avoided. Grout shall not be retempered or subjected to vibration from any source. Where clearances are unusually small, placement shall be under pressure with a grout pump. Temperature of the grout, and of surfaces receiving the grout, shall be maintained at (65 to 85 degrees F) until after setting.

3.16.2.2 Treatment of Exposed Surfaces

For metal-oxidizing nonshrink grout, exposed surfaces shall be cut back (1 inch) and immediately covered with a parge coat of mortar consisting of 1 part portland cement and 2-1/2 parts fine aggregate by weight, with sufficient water to make a plastic mixture. The parge coat shall have a smooth finish. For other mortars or grouts, exposed surfaces shall have a smooth-dense finish and be left untreated. Curing shall comply with paragraph CURING AND PROTECTION.

3.17 TESTING AND INSPECTION FOR CONTRACTOR QUALITY CONTROL

The Contractor shall perform the inspection and tests described below and, based upon the results of these inspections and tests, shall take the action required and shall submit specified reports. When, in the opinion

of the Contracting Officer, the concreting operation is out of control, concrete placement shall cease and the operation shall be corrected. The laboratory performing the tests shall be onsite and shall conform with ASTM C 1077. Materials may be subjected to check testing by the Government from samples obtained at the manufacturer, at transfer points, or at the project site. The Government will inspect the laboratory, equipment, and test procedures prior to start of concreting operations and at their discretionthereafter for conformance with ASTM C 1077.

3.17.1 Grading and Corrective Action

3.17.1.1 Fine Aggregate

At least once during each shift when the concrete plant is operating, there shall be one sieve analysis and fineness modulus determination in accordance with ASTM C 136 and COE CRD-C 104 for the fine aggregate or for each fine aggregate if it is batched in more than one size or classification. The location at which samples are taken may be selected by the Contractor as the most advantageous for control. However, the Contractor is responsible for delivering fine aggregate to the mixer within specification limits. When the amount passing on any sieve is outside the specification limits, the fine aggregate shall be immediately resampled and retested. If there is another failure on any sieve, the fact shall immediately reported to the Contracting Officer, concreting shall be stopped, and immediate steps taken to correct the grading.

3.17.1.2 Coarse Aggregate

At least once during each shift in which the concrete plant is operating, there shall be a sieve analysis in accordance with ASTM C 136 for each size of coarse aggregate. The location at which samples are taken may be selected by the Contractor as the most advantageous for production control. However, the Contractor shall be responsible for delivering the aggregate to the mixer within specification limits. A test record of samples of aggregate taken at the same locations shall show the results of the current test as well as the average results of the five most recent tests including the current test. The Contractor may adopt limits for control coarser than the specification limits for samples taken other than as delivered to the mixer to allow for degradation during handling. When the amount passing any sieve is outside the specification limits, the coarse aggregate shall be immediately resampled and retested. If the second sample fails on any sieve, that fact shall be reported to the Contracting Officer. Where two consecutive averages of 5 tests are outside specification limits, the operation shall be considered out of control and shall be reported to the Contracting Officer. Concreting shall be stopped and immediate steps shall be taken to correct the grading.

3.17.2 Quality of Aggregates

Thirty days prior to the start of concrete placement, the Contractor shall perform all tests for aggregate quality required by ASTM C 33. In addition, after the start of concrete placement, the Contractor shall perform tests for aggregate quality at least every three months, and when the source of aggregate or aggregate quality changes. Samples tested after the start of concrete placement shall be taken immediately prior to entering the concrete mixer.

3.17.3 Scales, Batching and Recording

The accuracy of the scales shall be checked by test weights prior to start of concrete operations and at least once every three months. Such tests shall also be made as directed whenever there are variations in properties of the fresh concrete that could result from batching errors. Once a week the accuracy of each batching and recording device shall be checked during a weighing operation by noting and recording the required weight, recorded weight, and the actual weight batched. At the same time, the Contractor shall test and ensure that the devices for dispensing admixtures are operating properly and accurately. When either the weighing accuracy or batching accuracy does not comply with specification requirements, the plant shall not be operated until necessary adjustments or repairs have been made. Discrepancies in recording accuracies shall be corrected immediately.

3.17.4 Batch-Plant Control

The measurement of concrete materials including cementitious materials, each size of aggregate, water, and admixtures shall be continuously controlled. The aggregate weights and amount of added water shall be adjusted as necessary to compensate for free moisture in the aggregates. The amount of air-entraining agent shall be adjusted to control air content within specified limits. A report shall be prepared indicating type and source of cement used, type and source of pozzolan or slag used, amount and source of admixtures used, aggregate source, the required aggregate and water weights per (cubic yard), amount of water as free moisture in each size of aggregate, and the batch aggregate and water weights per (cubic yard) for each class of concrete batched during each day's plant operation.

3.17.5 Concrete Mixture

a. Air Content Testing. Air content tests shall be made when test specimens are fabricated. In addition, at least two tests for air content shall be made on randomly selected batches of each separate concrete mixture produced during each 8-hour period of concrete production. Additional tests shall be made when excessive variation in workability is reported by the placing foreman or Government inspector. Tests shall be made in accordance with ASTM C 231 for normal weight concrete and ASTM C 173 for lightweight concrete. Test results shall be plotted on control charts which shall at all times be readily available to the Government and shall be submitted weekly. Copies of the current control charts shall be kept in the field by testing crews and results plotted as tests are made. When a single test result reaches either the upper or lower action limit, a second test shall immediately be made. The results of the two tests shall be averaged and this average used as the air content of the batch to plot on both the air content and the control chart for range, and for determining need for any remedial action. The result of each test, or average as noted in the previous sentence, shall be plotted on a separate control chart for each mixture on which an "average line" is set at the midpoint of the specified air content range from paragraph Air Entrainment. An upper warning limit and a lower warning limit line shall be set 1.0 percentage point above and below the average line, respectively. An upper action limit and a lower action limit line shall be set 1.5 percentage points above and below the average line, respectively. The range between each two consecutive tests shall be plotted on a secondary control chart for range where an upper warning limit is set at 2.0 percentage points and an upper action limit is set at 3.0

percentage points. Samples for air content may be taken at the mixer, however, the Contractor is responsible for delivering the concrete to the placement site at the stipulated air content. If the Contractor's materials or transportation methods cause air content loss between the mixer and the placement, correlation samples shall be taken at the placement site as required by the Contracting Officer, and the air content at the mixer controlled as directed.

b. Air Content Corrective Action. Whenever points on the control chart for percent air reach either warning limit, an adjustment shall immediately be made in the amount of air-entraining admixture batched. As soon as practical after each adjustment, another test shall be made to verify the result of the adjustment. Whenever a point on the secondary control chart for range reaches the warning limit, the admixture dispenser shall be recalibrated to ensure that it is operating accurately and with good reproducibility. Whenever a point on either control chart reaches an action limit line, the air content shall be considered out of control and the concreting operation shall immediately be halted until the air content is under control. Additional air content tests shall be made when concreting is restarted.

c. Slump Testing. In addition to slump tests which shall be made when test specimens are fabricated, at least four slump tests shall be made on randomly selected batches in accordance with ASTM C 143 for each separate concrete mixture produced during each 8-hour or less period of concrete production each day. Also, additional tests shall be made when excessive variation in workability is reported by the placing foreman or Government inspector. Test results shall be plotted on control charts which shall at all times be readily available to the Government and shall be submitted weekly. Copies of the current control charts shall be kept in the field by testing crews and results plotted as tests are made. When a single slump test reaches or goes beyond either the upper or lower action limit, a second test shall immediately be made. The results of the two tests shall be averaged and this average used as the slump of the batch to plot on both the control charts for slump and the chart for range, and for determining need for any remedial action. Limits shall be set on separate control charts for slump for each type of mixture. The upper warning limit shall be set at (1/2 inch) below the maximum allowable slump specified in paragraph Slump in PART 1 for each type of concrete and an upper action limit line and lower action limit line shall be set at the maximum and minimum allowable slumps, respectively, as specified in the same paragraph. The range between each consecutive slump test for each type of mixture shall be plotted on a single control chart for range on which an upper action limit is set at (2 inches). Samples for slump shall be taken at the mixer. However, the Contractor is responsible for delivering the concrete to the placement site at the stipulated slump. If the Contractor's materials or transportation methods cause slump loss between the mixer and the placement, correlation samples shall be taken at the placement site as required by the Contracting Officer, and the slump at the mixer controlled as directed.

d. Slump Corrective Action. Whenever points on the control charts for slump reach the upper warning limit, an adjustment shall

immediately be made in the batch weights of water and fine aggregate. The adjustments are to be made so that the total water content does not exceed that amount allowed by the maximum w/c ratio specified, based on aggregates which are in a saturated surface dry condition. When a single slump reaches the upper or lower action limit, no further concrete shall be delivered to the placing site until proper adjustments have been made. Immediately after each adjustment, another test shall be made to verify the correctness of the adjustment. Whenever two consecutive individual slump tests, made during a period when there was no adjustment of batch weights, produce a point on the control chart for range at or above the upper action limit, the concreting operation shall immediately be halted, and the Contractor shall take appropriate steps to bring the slump under control. Additional slump tests shall be made as directed.

e. Temperature. The temperature of the concrete shall be measured when compressive strength specimens are fabricated. Measurement shall be in accordance with ASTM C 1064. The temperature shall be reported along with the compressive strength data.

f. Strength Specimens. At least one set of test specimens shall be made, for compressive or flexural strength as appropriate, on each different concrete mixture placed during the day for each (500 cubic yards) or portion thereof of that concrete mixture placed each day. Additional sets of test specimens shall be made, as directed by the Contracting Officer, when the mixture proportions are changed or when low strengths have been detected. A truly random (not haphazard) sampling plan shall be developed by the Contractor and approved by the Contracting Officer prior to the start of construction. The plan shall assure that sampling is done in a completely random and unbiased manner. A set of test specimens for concrete with a 28-day specified strength per paragraph Strength Requirements in PART 1 shall consist of four specimens, two to be tested at 7 days and two at 28 days. Test specimens shall be molded and cured in accordance with ASTM C 31 and tested in accordance with ASTM C 39 for test cylinders and ASTM C 78 for test beams. Results of all strength tests shall be reported immediately to the Contracting Officer. Quality control charts shall be kept for individual strength "tests", ("test" as defined in paragraph Strength Requirements in PART 1) moving average of last 3 "tests" for strength, and moving average for range for the last 3 "tests" for each mixture. The charts shall be similar to those found in ACI 214.3R.

3.17.6 Inspection Before Placing

Foundations, construction joints, forms, and embedded items shall be inspected by the Contractor in sufficient time prior to each concrete placement in order to certify to the Contracting Officer that they are ready to receive concrete. The results of each inspection shall be reported in writing.

3.17.7 Placing

The placing foreman shall supervise placing operations, shall determine that the correct quality of concrete or grout is placed in each location as specified and as directed by the Contracting Officer, and shall be responsible for measuring and recording concrete temperatures and ambient

temperature hourly during placing operations, weather conditions, time of placement, volume placed, and method of placement. The placing foreman shall not permit batching and placing to begin until it has been verified that an adequate number of vibrators in working order and with competent operators are available. Placing shall not be continued if any pile of concrete is inadequately consolidated. If any batch of concrete fails to meet the temperature requirements, immediate steps shall be taken to improve temperature controls.

3.17.8 Vibrators

The frequency and amplitude of each vibrator shall be determined in accordance with COE CRD-C 521 prior to initial use and at least once a month when concrete is being placed. Additional tests shall be made as directed when a vibrator does not appear to be adequately consolidating the concrete. The frequency shall be determined while the vibrator is operating in concrete with the tachometer being held against the upper end of the vibrator head while almost submerged and just before the vibrator is withdrawn from the concrete. The amplitude shall be determined with the head vibrating in air. Two measurements shall be taken, one near the tip and another near the upper end of the vibrator head, and these results averaged. The make, model, type, and size of the vibrator and frequency and amplitude results shall be reported in writing. Any vibrator not meeting the requirements of paragraph Consolidation, shall be immediately removed from service and repaired or replaced.

3.17.9 Curing Inspection

a. Moist Curing Inspections. At least once each shift, and not less than twice per day on both work and non-work days, an inspection shall be made of all areas subject to moist curing. The surface moisture condition shall be noted and recorded.

b. Moist Curing Corrective Action. When a daily inspection report lists an area of inadequate curing, immediate corrective action shall be taken, and the required curing period for those areas shall be extended by 1 day.

c. Membrane Curing Inspection. No curing compound shall be applied until the Contractor has verified that the compound is properly mixed and ready for spraying. At the end of each operation, the Contractor shall estimate the quantity of compound used by measurement of the container and the area of concrete surface covered, shall compute the rate of coverage in (square feet per gallon), and shall note whether or not coverage is uniform.

d. Membrane Curing Corrective Action. When the coverage rate of the curing compound is less than that specified or when the coverage is not uniform, the entire surface shall be sprayed again.

e. Sheet Curing Inspection. At least once each shift and once per day on non-work days, an inspection shall be made of all areas being cured using impervious sheets. The condition of the covering and the tightness of the laps and tapes shall be noted and recorded.

f. Sheet Curing Corrective Action. When a daily inspection report lists any tears, holes, or laps or joints that are not completely closed, the tears and holes shall promptly be repaired or the

sheets replaced, the joints closed, and the required curing period for those areas shall be extended by 1 day.

3.17.10 Cold-Weather Protection

At least once each shift and once per day on non-work days, an inspection shall be made of all areas subject to cold-weather protection. Any deficiencies shall be noted, corrected, and reported.

3.17.11 Mixer Uniformity

a. Stationary Mixers. Prior to the start of concrete placing and once every 6 months when concrete is being placed, or once for every (75,000 cubic yards) of concrete placed, whichever results in the shortest time interval, uniformity of concrete mixing shall be determined in accordance with ASTM C 94.

b. Truck Mixers. Prior to the start of concrete placing and at least once every 6 months when concrete is being placed, uniformity of concrete mixing shall be determined in accordance with ASTM C 94. The truck mixers shall be selected randomly for testing. When satisfactory performance is found in one truck mixer, the performance of mixers of substantially the same design and condition of the blades may be regarded as satisfactory.

c. Mixer Uniformity Corrective Action. When a mixer fails to meet mixer uniformity requirements, either the mixing time shall be increased, batching sequence changed, batch size reduced, or adjustments shall be made to the mixer until compliance is achieved.

3.17.12 Reports

All results of tests or inspections conducted shall be reported informally as they are completed and in writing daily. A weekly report shall be prepared for the updating of control charts covering the entire period from the start of the construction season through the current week. During periods of cold-weather protection, reports of pertinent temperatures shall be made daily. These requirements do not relieve the Contractor of the obligation to report certain failures immediately as required in preceding paragraphs. Such reports of failures and the action taken shall be confirmed in writing in the routine reports. The Contracting Officer has the right to examine all contractor quality control records.

-- End of Section --

SECTION TABLE OF CONTENTS

DIVISION 03 - CONCRETE

SECTION 03410

PRECAST/PRESTRESSED CONCRETE FLOOR AND ROOF UNITS

05/98

PART 1 GENERAL

1.1 REFERENCES
1.2 GENERAL REQUIREMENTS
1.2.1 Calculations
1.3 DESIGN
1.4 SUBMITTALS
1.5 HANDLING AND STORAGE

PART 2 PRODUCTS

2.1 FABRICATION
2.2 TESTS

PART 3 EXECUTION

3.1 ERECTION
3.2 CONCRETE TOPPING

-- End of Section Table of Contents --

SECTION 03410

PRECAST/PRESTRESSED CONCRETE FLOOR AND ROOF UNITS
05/98

PART 1 GENERAL

1.1 REFERENCES

The publications listed below form a part of this specification to the extent referenced. The publications are referred to in the text by basic designation only.

AMERICAN WELDING SOCIETY (AWS)

AWS D1.1	(1996) Structural Welding Code - Steel

PRECAST/PRESTRESSED CONCRETE INSTITUTE (PCI)

PCI Mnl-116S	(1985) Manual for Quality Control for Plants and Production of Precast and Prestressed Concrete Products
PCI Mnl-120	(1992) PCI Design Handbook - Precast and Prestressed Concrete

1.2 GENERAL REQUIREMENTS

Precast/prestressed units shall be produced under plant-controlled conditions conforming to PCI Mnl-116S by a firm certified under the PCI Plant Certification Program and specializing in providing precast/prestressed concrete floor and roof units and related services.

1.2.1 Calculations

Design calculations for members and connections not shown in the contract drawings shall be made by a registered professional engineer experienced in the design of precast-prestressed concrete.

1.3 DESIGN

Design of units shall be performed by structural analysis in accordance with ACI 318/318R or PCI Mnl-120 whichever is customary with the fabricator. Structural analysis shall include evaluations of the effects of connections, holes, discontinuities, concentrated loads, and joints. Units shall be designed for the load conditions and spans indicated and any additional loads imposed by openings; work of other trades; concrete topping indicated; and all loading and restraining conditions from fabrication, handling, and erection. The design shall compensate for the weight of the additional topping required by the camber in order to achieve the minimum topping thickness used in the design.

1.4 SUBMITTALS

Government approval is required for submittals with a "G" designation; submittals not having a "G" designation are for information only. When used, a designation following the "G" designation identifies the office that will review the submittal for the Government. The following shall be submitted in accordance with Section 01330 SUBMITTAL PROCEDURES:

SD-02 Shop Drawings

Floor and Roof Units; G-AE.

Detail drawings shall consist of erection instructions and the following as applicable:

a. Anchorage for work of other trades.

b. Anchorage to supporting construction, if required by the design.

c. Headers for openings where additional structural work is required.

d. Joints between units and between units and other construction.

e. Reinforcing including prestressing steel details.

f. Minimum concrete compressive strengths at initial prestress and 28 days, initial prestress to be applied, and minimum release strength.

g. Shoring, unless structural computations are submitted showing that allowable concrete stresses during the work will not be exceeded when shoring is not used.

h. Layout plan and member identification marks.

SD-03 Product Data

Floor and Roof Units;

Complete design analysis and load charts signed by a professional engineer and in booklet form for the units to be furnished. Analysis shall include mixture proportion; concrete strength; stress calculations; complete camber calculation showing initial camber, estimated long term camber, and anticipated long term camber and deflection. Design analysis shall indicate which code the design was based on.

1.5 HANDLING AND STORAGE

Units shall be cured prior to delivery to the jobsite. Units shall be stored off the ground and protected from soilage, marring, damage, or overload. Stacked members shall be separated by battens across the full width at bearing points.

PART 2 PRODUCTS

2.1 FABRICATION

Fabrication of the units shall be in accordance with the requirements of PCI Mnl-116S. Units shall be made available for inspection by the Contracting Officer at the manufacturer's plant. Shape of units shall be

hollow-core slabs as indicated. Unit spans shall be as shown. Units shall be fabricated within the dimensional tolerances given in PCI Mnl-116S. Inserts, anchor bolts, bearing plates, and other embedded items shall be located as required or indicated. Where required, units shall be marked to facilitate sequential erection. Openings for mechanical and utility systems and for architectural purpose shall be as shown. Prestressing eccentricity and force applied shall be adjusted to the extent possible so that the camber provided is the minimum amount needed to produce an approximate level slab after dead loads are applied. Surfaces that will be concealed from view shall be free of surface holes over (1/2 inch) in diameter. Surfaces to receive subsequent applications other than painting shall be suitable for the purpose intended and free of any coatings that would interfere with adhesion or bond. Surfaces that will be painted or exposed to view shall be smooth, free of form marks, and shall have surface blemishes filled and finished to match adjoining concrete in color and texture.

2.2 TESTS

Tests, as required by PCI Mnl-116S, shall be performed by an independent testing laboratory or in the manufacturer's approved laboratory if the manufacturer has a PCI certified plant with proof of current certification.

PART 3 EXECUTION

3.1 ERECTION

Erection shall be in accordance with the approved detail drawings. Field welding shall be in accordance with AWS D1.1. Installation of equipment required by other trades shall be accomplished as the work progresses if required by design. Field-cut openings for utilities penetrations will not be permitted unless recommended by the manufacturer and approved by the Contracting Officer. Bearing surfaces shall be level and free from irregularities. Irregularities in masonry bearing surfaces shall be leveled as recommended by the manufacturer or with a stiff cement grout. Grout shall be allowed to harden before installing the units. Units shall be installed at right angles to bearings, drawn up tight without forcing or distortion, and with sides plumb. Slab ends shall be aligned. Underside of slabs shall present true ceiling surface when the ceiling is exposed to view. The keyways between units and other spaces shall be cleaned and filled solid with grout. Grout that may have seeped through to surfaces in spaces below shall be removed before hardening. Joints in ceilings that will be exposed to view or painted shall be caulked as specified in Section 07900 JOINT SEALING. Erected units shall be temporarily covered until finish roofing is applied.

3.2 CONCRETE TOPPING

Concrete topping reinforced with welded wire fabric or a micro-reinforcing system by Fibermesh (or equal) shall be applied to tops of units continuous over the entire span. Welded wire fabric of the size indicated shall be as specified in Section 03200 CONCRETE REINFORCEMENT. Micro-reinforcing system shall be 100 percent virgin homopolymer polypropolene fibrillated fibers, MD graded. Containing no reprocessed olefin materials. Micro-reinforcing system shall meet ASTM C1116 Type III and performance level 1. Tops of units shall be clean and free of any materials that would reduce adhesion or bond. The concrete topping shall be a minimum of 50mm (2 inches) thick of 24 MPa (3500 psi) minimum compressive strength at 28 days. Concrete materials, quality, placing, curing, and finishing shall be

as specified in Section 03300 CAST-IN-PLACE STRUCTURAL CONCRETE.

-- End of Section --

This page was intentionally left blank for duplex printing.

SECTION TABLE OF CONTENTS

DIVISION 03 - CONCRETE

SECTION 03413

PRECAST ARCHITECTURAL CONCRETE

05/98

PART 1 GENERAL

1.1 REFERENCES
1.2 GENERAL REQUIREMENTS
1.3 DESIGN
1.3.1 Standards and Loads
1.3.2 Connections
1.3.3 Concrete Strength
1.3.4 Concrete Proportion
1.3.5 Calculations
1.4 SUBMITTALS
1.5 STORAGE AND INSPECTION AT MANUFACTURER'S PLANT
1.6 HANDLING AND STORAGE

PART 2 PRODUCTS

2.1 MATERIALS
2.1.1 Aggregates
2.1.2 Reinforcing Steel
2.1.3 Prestressing Strands
2.1.4 Tie Wire
2.1.5 Inserts
2.1.6 Plates, Angles, Anchors and Embedments
2.1.7 Form Release Agent
2.1.8 Admixtures
2.2 PRECAST CONCRETE UNITS
2.2.1 Formwork
2.2.2 Reinforcement
2.2.3 Embedded Accessories
2.2.4 Stripping
2.2.5 Identification
2.2.6 Finishes
2.2.6.1 Exposed Surfaces
2.2.6.2 Other Surfaces
2.2.7 WEEP HOLES

PART 3 EXECUTION

3.1 ERECTION
3.2 JOINT SEALING
3.3 CLEANING
3.4 PROTECTION OF WORK
3.5 DEFECTIVE WORK

-- End of Section Table of Contents --

SECTION 03413

PRECAST ARCHITECTURAL CONCRETE
05/98

PART 1 GENERAL

1.1 REFERENCES

The publications listed below form a part of this specification to the extent referenced. The publications are referred to in the text by basic designation only.

ACI INTERNATIONAL (ACI)

ACI 211.1	(1991) Standard Practice for Selecting Proportions for Normal, Heavyweight, and Mass Concrete
ACI 211.2	(1998) Standard Practice for Selecting Proportions for Structural Lightweight Concrete
ACI Detailing Mnl	(1994) ACI Detailing Manual: Section Details and Detailing of Concrete Reinforcement
ACI 318/318R	(1995) Building Code Requirements for Structural Concrete and Commentary

AMERICAN SOCIETY FOR TESTING AND MATERIALS (ASTM)

ASTM A 416/A 416M	(1997) Steel Strand, Uncoated Seven-Wire for Prestressed Concrete
ASTM C 494	(1998) Chemical Admixtures for Concrete
ASTM C 1017	(1997) Chemical Admixtures for Use in Producing Flowing Concrete

AMERICAN WELDING SOCIETY (AWS)

AWS D1.1	(1998) Structured Welding Code - Steel

PRECAST/PRESTRESSED CONCRETE INSTITUTE (PCI)

PCI Mnl-116S	(1985) Manual for Quality Control for Plants and Production of Precast and Prestressed Concrete Products
PCI Mnl-117	(1996) Manual for Quality Control for Plants and Production of Architectural

Precast Concrete Products

PCI Mnl-122 (1989) Architectural Precast Concrete

1.2 GENERAL REQUIREMENTS

Precast concrete units shall be designed and fabricated by an experienced and acceptable precast concrete manufacturer certified under the PCI Plant Certification Program. The manufacturer shall have been regularly and continuously engaged in the manufacture of precast concrete work similar to that indicated on the drawings for at least 3 years. Precast work shall be coordinated with the work of other trades.

1.3 DESIGN

1.3.1 Standards and Loads

Precast unit design shall conform to (ACI 318/318R) and PCI Mnl-122. Design loads for precast concrete shall be as indicated on the drawings. A differential temperature of (160 degrees F), between interior and exterior faces of the units, shall be considered in the design. Stresses due to restrained volume change caused by shrinkage and temperature differential, handling, transportation and erection shall be accounted for in the design.

1.3.2 Connections

Connection of units to other members, or to other units shall be of the type and configuration indicated. The design and sizing of connections for all design loads shall be by the Contractor.

1.3.3 Concrete Strength

Precast concrete units shall have a 28-day compressive strength of (5000 psi).

1.3.4 Concrete Proportion

Selection of proportions for concrete shall be based on the methodology presented in ACI 211.1 for normal weight concrete and ACI 211.2 for lightweight concrete. The concrete proportion shall be developed using the same type and brand of cement, the same type and gradation of aggregates, and the same type and brand of admixture that will be used in the manufacture of precast concrete units for the project. Calcium chloride shall not be used in precast concrete and admixtures containing chloride ions, nitrates, or other substances that are corrosive shall not be used in prestressed concrete.

1.3.5 Calculations

Calculations for design of members and connections shall be made by a professional engineer experienced in the design of precast architectural concrete. Calculation shall include the analysis of member for lifting stresses and the sizing of the lifting inserts.

1.4 SUBMITTALS

Government approval is required for submittals with a "GA" designation; submittals having an "FIO" designation are for information only. The following shall be submitted in accordance with Section 01330 SUBMITTAL

PROCEDURES:

SD-02 Shop Drawings

Architectural Concrete System; G-AE

Detail drawings showing details in accordance with ACI Detailing Mnl and (ACI 318/318R), including installation details. Detail drawings shall indicate separate identification marks for each different precast unit, location of units in the work, elevations, fabrication details, welding details, reinforcement, connections, dimensions, interface with adjacent members, blocking points for units stored at the precast concrete plant or at the jobsite, lifting points and special handling instructions in sufficient detail to cover manufacture, handling, and erection.

SD-03 Product Data

Calculations;

Design calculations, prior to the manufacture of any precast architectural concrete units for the project.

Mix Design;

A statement giving the maximum nominal coarse aggregate size, the proportions of all ingredients and the type and amount of any admixtures that will be used in the manufacture of each strength and type of concrete, prior to commencing operations. The statement shall be accompanied by test results from an approved testing laboratory, certifying that the proportions selected will produce concrete of the properties required. No substitutions shall be made without additional tests to verify that the concrete properties are satisfactory.

Manufacturer's Qualifications;

A statement giving the qualifications of the precast concrete manufacturer and of the installers, prior to commencing operations.

SD-04 Samples

Precast Concrete Units; G-AE

(12 by 12 by 2 inch) samples of each type of precast unit finish required. Samples shall show matrix color, surface color, surface texture, and panel back finish.

1.5 STORAGE AND INSPECTION AT MANUFACTURER'S PLANT

Precast units temporarily stored at the manufacturer's plant shall be protected from damage in accordance with PCI Mnl-117 and PCI Mnl-122. Immediately prior to shipment to the jobsite, all precast concrete units shall be inspected for quality to insure all precast units conform to the requirements specified. Inspection for quality shall include, but shall not necessarily be limited to, the following elements: color, texture, dimensional tolerances, chipping, cracking, staining, warping and honeycombing. All defective precast concrete units shall be replaced or

repaired as approved.

1.6 HANDLING AND STORAGE

Precast units shall be delivered to the site in accordance with delivery schedule to avoid excessive build-up of units in storage at the site. Upon delivery to the jobsite all precast units shall be inspected for quality as specified above. If the precast units cannot be unloaded and placed directly into the work, they shall be stored on site, off the ground and protected from weather, marring, or overload. Precast units shall be handled in accordance with manufacturer's instructions.

PART 2 PRODUCTS

2.1 MATERIALS

Except as otherwise specified, material shall conform to Section 03300 CAST-IN-PLACE STRUCTURAL CONCRETE and Section 03200 CONCRETE REINFORCEMENT.

2.1.1 Aggregates

Aggregates shall be manufacturer's standard aggregate for mix design.

2.1.2 Reinforcing Steel

Reinforcing steel shall be galvanized if clearance to an exterior face is (1 inch) or less.

2.1.3 Prestressing Strands

Prestressing strands shall conform to ASTM A 416/A 416M.

2.1.4 Tie Wire

Tie wire shall be soft monel or 18-8 stainless steel.

2.1.5 Inserts

Inserts shall be manufacturer's standard, suited for the application.

2.1.6 Plates, Angles, Anchors and Embedments

Material shall be as specified in PCI Mnl-117. Steel items, other than stainless, shall be hot-dip galvanized. Steel items embedded in concrete, shall be either stainless steel or hot dip galvanized steel. Steel anchors shall be stainless steel where indicated on drawings.

2.1.7 Form Release Agent

Release agent shall be manufacturer's standard nonstaining type.

2.1.8 Admixtures

Admixtures shall conform to ASTM C 494. Plasticizing admixture, if used, shall conform to ASTM C 1017.

2.2 PRECAST CONCRETE UNITS

Precast concrete units shall be manufactured and cured in accordance with

the applicable provisions of PCI Mnl-116S and PCI Mnl-117. Units shall be manufactured within the allowable tolerances given in PCI Mnl-116S, and PCI Mnl-122.

2.2.1 Formwork

Forms shall be steel of adequate thickness, braced, stiffened, anchored and aligned to produce precast architectural concrete units within required dimensional tolerances. Forms shall be sufficiently rigid to provide dimensional stability during handling and concrete placement and consolidation. Fiberglass-reinforced plastic, plastic coated wood, elastomeric or other non absorptive material shall be used for making tight joints and rustication pieces.

2.2.2 Reinforcement

Fabrication and placement of reinforcement shall conform to the details shown on the approved detail drawings and PCI Mnl-117.

2.2.3 Embedded Accessories

Anchors, inserts, lifting devices, and other accessories which are to be embedded in the precast units shall be furnished and installed in accordance with the approved detail drawings. Embedded items shall be accurately positioned in their designed location, and shall have sufficient anchorage and embedment to satisfy design requirements.

2.2.4 Stripping

Precast concrete units shall not be removed from forms until units develop sufficient strength to safely strip the formwork and to remove the precast concrete units from the forms to prevent damage to the units from overstress or chipping.

2.2.5 Identification

Each precast concrete unit shall be marked to correspond to the identification marks for each different precast unit shown on the detail drawings.

2.2.6 Finishes

2.2.6.1 Exposed Surfaces

Surfaces of precast units exposed to view or surfaces indicated to be finished shall be finished as follows: Smooth with light acid etched surface. Color and finish shall match the existing precast panels installed on Phase Three of the Consolidated Lodging Facility. Supplier shall visit the site to verify and match the precast panel appearance for this phase of work.

2.2.6.2 Other Surfaces

Surfaces of precast units not exposed to view or not otherwise indicated to be finished shall be finished in accordance with Section 03300 CAST-IN-PLACE STRUCTURAL CONCRETE.

2.2.7 WEEP HOLES

At precast panels which extend below grade and where the panel is over 2133mm (7'-0") high, provide shop drilled, 9mm (3/8")diameter weep holes at 609mm (24") O.C. along the width of the panel. The weep holes are to be located at a point in the panel which will match the finished floor elevation of the building.

PART 3 EXECUTION

3.1 ERECTION

Precast units shall be erected in accordance with the detail drawings and without damage to other units or to adjacent members. Units shall be set true to alignment and level, with joints properly spaced and aligned both vertically and horizontally. Erection tolerances shall be in accordance with the requirements of PCI Mnl-117 and PCI Mnl-122. As units are being erected, shims and wedges shall be placed as required to maintain correct alignment. After final attachment, precast units shall be grouted as shown. After erection, welds and abraded surfaces of steel shall be cleaned and touched-up with a zinc-rich paint. Welds shall be made by a certified welder in accordance with the manufacturer's erection drawings. Pickup points, boxouts, inserts, and similar items shall be finished to match adjacent areas after erection. Erection of precast units shall be supervised and performed by workmen skilled in this type of work. Welding and the qualifications of welders shall be in accordance with AWS D1.1.

3.2 JOINT SEALING

Joint sealing shall be as specified in Section 07900 JOINT SEALING.

3.3 CLEANING

Not sooner than 72 hours after joints are sealed, faces and other exposed surfaces of precast concrete discolored during erection shall be cleaned to remove dirt and stains by dry scrubbing with a stiff fiber brush, wetting the surface and vigorous scrubbing of the finish with a stiff fiber brush followed by additional washing, or by chemical cleaning compounds such as detergents or other commercial cleaners. Commercial cleaners shall be used in accordance with the manufacturer's recommendations. Cleaning procedure shall be performed on a designated test area and shall be approved prior to proceeding with cleaning work. Discolorations which cannot be removed by these procedures, will be considered defective work. Cleaning work shall be done when temperature and humidity permit surfaces to dry rapidly. Adjacent surfaces shall not be damaged during cleaning operations.

3.4 PROTECTION OF WORK

Precast units shall be protected against damage from subsequent operations.

3.5 DEFECTIVE WORK

Precast concrete units damaged during erection shall be repaired as soon after occurrence as possible or replaced, as directed, using approved procedures. All repairs to precast concrete units shall match the adjacent surfaces in color and texture and shall be as approved. Unless otherwise approved, repair procedures shall conform to PCI Mnl-117.

-- End of Section --

This page was intentionally left blank for duplex printing.

SECTION TABLE OF CONTENTS

DIVISION 04 - MASONRY

SECTION 04200

MASONRY

07/92

PART 1 GENERAL

1.1 REFERENCES
1.2 SUBMITTALS
1.3 SAMPLE MASONRY PANELS
1.4 DELIVERY, HANDLING, AND STORAGE
1.4.1 Masonry Units
1.4.2 Reinforcement, Anchors, and Ties
1.4.3 Cementitious Materials, Sand and Aggregates
1.5 SPECIAL INSPECTION

PART 2 PRODUCTS

2.1 GENERAL REQUIREMENTS
2.2 CLAY OR SHALE BRICK
2.2.1 Clay or Shale Brick
2.3 CONCRETE BRICK
2.4 CONCRETE MASONRY UNITS (CMU)
2.4.1 Aggregates
2.4.2 Kinds and Shapes
2.4.3 Fire-Rated CMU
2.5 Not Used
2.6 Not Used.
2.7 Not Used.
2.8 PRECAST CONCRETE ITEMS
2.9 Not Used
2.10 MORTAR
2.10.1 Admixtures
2.10.2 Mortar Color
2.11 GROUT
2.11.1 Admixtures
2.11.2 Grout Barriers
2.12 ANCHORS, TIES, AND BAR POSITIONERS
2.12.1 Wire Mesh Ties
2.12.2 Wall Ties
2.12.3 Not Used
2.12.4 Adjustable Anchors
2.12.5 Bar Positioners
2.13 JOINT REINFORCEMENT
2.14 REINFORCING STEEL BARS AND RODS
2.15 CONTROL JOINT KEYS
2.16 EXPANSION-JOINT MATERIALS
2.17 INSULATION
2.17.1 Rigid Board-Type Insulation for Cavity Walls
2.17.1.1 Insulation Thickness and Air Space
2.17.1.2 Aged R-Value

2.17.1.3 Recovered Material
2.17.2 Insulation Adhesive
2.18 FLASHING
2.19 WEEP HOLES
2.20 Compressible Filler

PART 3 EXECUTION

3.1 ENVIRONMENTAL REQUIREMENTS
3.1.1 Hot Weather Installation
3.1.2 Cold Weather Installation
3.1.2.1 Preparation
3.1.2.2 Completed Masonry and Masonry Not Being Worked On
3.2 LAYING MASONRY UNITS
3.2.1 Surface Preparation
3.2.2 Forms and Shores
3.2.3 Concrete Masonry Units
3.2.4 Clay or Shale Brick Units
3.2.4.1 Wetting of Units
3.2.4.2 Solid Units
3.2.4.3 Hollow Units
3.2.5 Tolerances
3.2.6 Cutting and Fitting
3.2.7 Jointing
3.2.7.1 Flush Joints
3.2.7.2 Tooled Joints
3.2.7.3 Door and Window Frame Joints
3.2.8 Joint Widths
3.2.8.1 Concrete Masonry Units
3.2.8.2 Not Used
3.2.8.3 Brick
3.2.9 Embedded Items
3.2.10 Unfinished Work
3.2.11 Masonry Wall Intersections
3.2.12 Partitions
3.3 ANCHORED VENEER CONSTRUCTION
3.4 WEEP HOLES
3.5 COMPOSITE WALLS
3.6 Not Used
3.7 Not Used
3.8 Not Used
3.9 MORTAR
3.10 REINFORCING STEEL
3.10.1 Positioning Bars
3.10.2 Splices
3.11 JOINT REINFORCEMENT
3.12 PLACING GROUT
3.12.1 Vertical Grout Barriers for Fully Grouted Walls
3.12.2 Horizontal Grout Barriers
3.12.3 Grout Holes and Cleanouts
3.12.3.1 Grout Holes
3.12.3.2 Cleanouts for Hollow Unit Masonry Construction
3.12.3.3 Cleanouts for Solid Unit Masonry Construction
3.12.4 Grouting Equipment
3.12.4.1 Grout Pumps
3.12.4.2 Vibrators
3.12.5 Grout Placement
3.12.5.1 Low-Lift Method
3.12.5.2 High-Lift Method

3.13 BOND BEAMS
3.14 CONTROL JOINTS
3.15 BRICK EXPANSION JOINTS AND CONCRETE MASONRY VENEER JOINTS
3.16 SHELF ANGLES
3.17 LINTELS
3.17.1 Masonry Lintels
3.18 SILLS AND COPINGS
3.19 ANCHORAGE TO CONCRETE AND STRUCTURAL STEEL
3.19.1 Anchorage to Concrete
3.19.2 Anchorage to Structural Steel
3.20 Not Used
3.21 INSULATION
3.22 Not Used
3.23 POINTING AND CLEANING
3.23.1 Concrete Masonry Unit and Concrete Brick Surfaces
3.23.2 Clay or Shale Brick Surfaces
3.24 BEARING PLATES
3.25 PROTECTION
3.26 TEST REPORTS
3.26.1 Field Testing of Mortar
3.26.2 Field Testing of Grout
3.26.3 Efflorescence Test
3.26.4 Prism Tests

-- End of Section Table of Contents --

SECTION 04200

MASONRY
07/92

PART 1 GENERAL

1.1 REFERENCES

The publications listed below form a part of this specification to the extent referenced. The publications are referred to in the text by basic designation only.

AMERICAN SOCIETY FOR TESTING AND MATERIALS (ASTM)

ASTM A 82	(1995a) Steel Wire, Plain, for Concrete Reinforcement
ASTM A 153	(1996) Zinc Coating (Hot-Dip) on Iron and Steel Hardware
ASTM A 615/A 615M	(1996a) Deformed and Plain Billet-Steel Bars for Concrete Reinforcement
ASTM C 55	(1996a) Concrete Brick
ASTM C 67	(1996) Sampling and Testing Brick and Structural Clay Tile
ASTM C 90	(1996a) Loadbearing Concrete Masonry Units
ASTM C 91	(1996) Masonry Cement
ASTM C 140	(1996b) Sampling and Testing Concrete Masonry Units
ASTM C 216	(1995a) Facing Brick (Solid Masonry Units Made from Clay or Shale)
ASTM C 270	(1997) Mortar for Unit Masonry
ASTM C 476	(1995) Grout for Masonry
ASTM C 494	(1992) Chemical Admixtures for Concrete
ASTM C 641	(1982; R 1991) Staining Materials in Lightweight Concrete Aggregates
ASTM C 780	(1996) Preconstruction and Construction Evaluation of Mortars for Plain and Reinforced Unit Masonry
ASTM C 1019	(1989a; R 1993) Sampling and Testing Grout
ASTM C 1072	(1994) Measurement of Masonry Flexural

	Bond Strength
ASTM C 1289	(1995) Faced Rigid Cellular Polyisocyanurate Thermal Insulation Board
ASTM D 2000	(1996) Rubber Products in Automotive Applications
ASTM D 2240	(1997) Rubber Property - Durometer Hardness
ASTM D 2287	(1996) Nonrigid Vinyl Chloride Polymer and Copolymer Molding and Extrusion Compounds
ASTM E 447	(1992b) Compressive Strength of Masonry Prisms

1.2 SUBMITTALS

Government approval is required for submittals with a "GA" designation; submittals having an "FIO" designation are for information only. The following shall be submitted in accordance with Section 01330 SUBMITTAL PROCEDURES:

SD-01 Data

Brick; GA. Insulation; FIO.
Manufacturer's descriptive data.

SD-09 Reports

Efflorescence Test; FIO. Field Testing of Mortar; FIO. Field Testing of Grout; FIO. Prism tests; FIO. Masonry Cement; FIO. Fire-rated CMU; FIO.

Test reports from an approved independent laboratory. Test reports on a previously tested material shall be certified as the same as that proposed for use in this project.

Special Inspection; GA.

Copies of masonry inspector reports.

SD-13 Certificates

Brick; FI0. Concrete Brick; FIO. Concrete Masonry Units (CMU); FIO. . Control Joint Keys; FIO. Anchors, Ties, and Bar Positioners; FIO. Expansion-Joint Materials; FIO. Joint Reinforcement; FIO. Reinforcing Steel Bars and Rods; FIO. Masonry Cement; FIO. Mortar Coloring; FIO. Insulation; FIO. Mortar Admixtures; FIO. Grout Admixtures; FIO.

Certificates of compliance stating that the materials meet the specified requirements.

Insulation; FIO.

Certificate attesting that the polyurethane or polyisocyanurate insulation furnished for the project contains recovered material, and showing an estimated percent of such recovered material.

SD-14 Samples

Clay or Shale Brick; GA1.

Color samples of three stretcher units and one unit for each type of special shape. Units shall show the full range of color and texture.

1.3 SAMPLE MASONRY PANELS

Refer to requirements of 04220 NONBARING MASONRY VENEER/STEEL STUD WALLS.

1.4 DELIVERY, HANDLING, AND STORAGE

Materials shall be delivered, handled, stored, and protected to avoid chipping, breakage, and contact with soil or contaminating material.

1.4.1 Masonry Units

Concrete masonry units shall be covered or protected from inclement weather and shall conform to the moisture content as specified in ASTM C 90 when delivered to the jobsite.

1.4.2 Reinforcement, Anchors, and Ties

Steel reinforcing bars, coated anchors, ties, and joint reinforcement shall be stored above the ground. Steel reinforcing bars and uncoated ties shall be free of loose mill scale and rust.

1.4.3 Cementitious Materials, Sand and Aggregates

Cementitious and other packaged materials shall be delivered in unopened containers, plainly marked and labeled with manufacturers' names and brands. Cementitious material shall be stored in dry, weathertight enclosures or be completely covered. Cement shall be handled in a manner that will prevent the inclusion of foreign materials and damage by water or dampness. Sand and aggregates shall be stored in a manner to prevent contamination or segregation.

1.5 SPECIAL INSPECTION

A qualified masonry inspector approved by the Contracting Officer shall perform inspection of the masonry work. Minimum qualifications for the masonry inspector shall be 5 years of reinforced masonry inspection experience or acceptance by a State, municipality, or other governmental body having a program of examining and certifying inspectors for reinforced masonry construction. The masonry inspector shall be present during preparation of masonry prisms, sampling and placing of masonry units, placement of reinforcement (including placement of dowels in footings and foundation walls), inspection of grout space, immediately prior to closing of cleanouts, and during grouting operations. The masonry inspector shall assure Contractor compliance with the drawings and specifications. The masonry inspector shall keep a complete record of all inspections and shall submit daily written reports to the Quality Control Supervisory Representative reporting the quality of masonry construction.

PART 2 PRODUCTS

2.1 GENERAL REQUIREMENTS

The source of materials which will affect the appearance of the finished

work shall not be changed after the work has started except with Contracting Officer's approval.

2.2 CLAY OR SHALE BRICK

Notwithstanding Section 00700 CONTRACT CLAUSES FAR 52.236-5, Material and Workmanship, the face brick shall be manufactured by Endicott Brick Company in order to be fully compatible with and interface with the existing Base masonry and Phases 1, 2 & 3 of the Lodging facility. No other product will be acceptable. The competition Advocate authorizes sole source procurement.

Color range of brick shall be in accordance with 09915 COLOR SCHEDULE and texture of brick shall be equivalent to "velour" texture and shall conform to the approved sample. Grade SW shall be used for all brickwork. Brick units shall be delivered factory-blended to provide a uniform appearance and color range in the completed wall.

2.2.1 Clay or Shale Brick

Solid clay or shale brick shall conform to ASTM C 216, Type FBS. Brick size shall be modular and the nominal size of the brick used shall be 57 mm (2-1/4 inches) high, 100 mm (4 inches) deep, and 200 mm (8 inches) long.

2.3 CONCRETE BRICK

Concrete brick shall conform to ASTM C 55, Type I, Grade N-I. Concrete brick may be used where necessary for filling out in concrete masonry unit construction.

2.4 CONCRETE MASONRY UNITS (CMU)

Hollow and solid concrete masonry units shall conform to ASTM C 90, Type I. Cement shall have a low alkali content and be of one brand.

2.4.1 Aggregates

Lightweight aggregates and blends of lightweight and heavier aggregates in proportions used in producing the units, shall comply with the following requirements when tested for stain-producing iron compounds in accordance with ASTM C 641: by visual classification method, the iron stain deposited on the filter paper shall not exceed the "light stain" classification.

2.4.2 Kinds and Shapes

Units shall be modular in size and shall include closer, jamb, header, lintel, and bond beam units to complete the work as indicated. Units used in exposed masonry surfaces in any one building shall have a uniform fine to medium texture and a uniform color.

2.4.3 Fire-Rated CMU

Concrete masonry units used in fire-rated construction shown on the drawings shall be of minimum equivalent thickness for the fire rating indicated and the corresponding type of aggregates indicated in TABLE I. Units containing more than one of the aggregates listed in TABLE I will be rated on the aggregate requiring the greater minimum equivalent thickness to produce the required fire rating.

TABLE I

FIRE-RATED CONCRETE MASONRY UNITS

See note (a) below

Aggregate Type	Minimum equivalent thickness in mm (inches) for fire rating of: 4 hours	3 hours	2 hours
Pumice	120 (4.7)	100 (4.0)	75 (3.0)
Expanded slag	130 (5.0)	110 (4.2)	85 (3.3)
Expanded clay, shale, or slate	145 (5.7)	120 (4.8)	95 (3.7)
Limestone, scoria, cinders or unexpanded slag	150 (5.9)	130 (5.0)	100 (4.0)
Calcareous gravel	160 (6.2)	135 (5.3)	105 (4.2)
Siliceous gravel	170 (6.7)	145 (5.7)	115 (4.5)

TABLE I

FIRE-RATED CONCRETE MASONRY UNITS

See note (a) below

Aggregate Type	Minimum equivalent thickness inches for fire rating of: 4 hours	3 hours	2 hours
Pumice	4.7	4.0	3.0
Expanded slag	5.0	4.2	3.3
Expanded clay, shale, or slate	5.7	4.8	3.7
Limestone, scoria, cinders or unexpanded slag	5.9	5.0	4.0
Calcareous gravel	6.2	5.3	4.2
Siliceous gravel	6.7	5.7	4.5

(a) Minimum equivalent thickness shall equal net volume as determined in conformance with ASTM C 140 divided by the product of the actual length and height of the face shell of the unit in millimeters / inches. Where walls are to receive plaster or be faced with brick, or otherwise form an assembly; the thickness of plaster or brick or other material in the assembly will be

included in determining the equivalent thickness.

2.5 Not Used

2.6 Not Used.

2.7 Not Used.

2.8 PRECAST CONCRETE ITEMS

Precast units shall be provided in accordance with 03413 PRECAST ARCHITECTURAL CONCRETE.

2.9 Not Used

2.10 MORTAR

Mortar shall be Type S in accordance with the proportion specification of ASTM C 270 except Type S cement-lime mortar proportion shall be 1 part cement, ½ part lime and 3 parts aggregate; when masonry cement ASTM C 91 is used the maximum air content shall be limited to 12 percent and performance equal to cement-lime mortar shall be verified. Verification of masonry cement performance shall be based on ASTM C 780 and ASTM C 1072. Cement shall have a low alkali content and be of one brand. Aggregates shall be from one source.

2.10.1 Admixtures

In cold weather, a non-chloride based accelerating admixture may be used subject to approval. Accelerating admixture shall be non-corrosive, shall contain less than 0.2 percent chlorides, and shall conform to ASTM C 494, Type C.

2.10.2 Mortar Color

Mortar color mix shall be provided for use at exposed brick masonry surfaces in accordance with 09915 COLOR SCHEDULE. Mortar coloring shall not exceed 3 percent of the weight of cement for carbon black and ten percent of the weight of cement for all other pigments. Mortar coloring shall be chemically inert, of finely ground limeproof pigment, and furnished in accurately pre-measured and packaged units that can be added to a measured amount of cement.

2.11 GROUT

Grout shall conform to ASTM C 476. Cement used in grout shall have a low alkali content. Grout slump shall be between 200 and 250 mm. (8 and 10 inches). Grout shall be used subject to the limitations of Table III. Proportions shall not be changed and materials with different physical or chemical characteristics shall not be used in grout for the work unless additional evidence is furnished that the grout meets the specified requirements.

2.11.1 Admixtures

In cold weather, a non-chloride based accelerating admixture may be used subject to approval. Accelerating admixture shall be non-corrosive, shall contain less than 0.2 percent chlorides, and shall conform to ASTM C 494, Type C.

2.11.2 Grout Barriers

Grout barriers for vertical cores shall consist of fine mesh wire, fiberglass, or expanded metal.

2.12 ANCHORS, TIES, AND BAR POSITIONERS

Anchors and ties shall be fabricated without drips or crimps and shall be zinc-coated in accordance with ASTM A 153, Class B-2. Steel wire used for anchors and ties shall be fabricated from steel wire conforming to ASTM A 82. Anchors and ties shall be sized to provide a minimum of 17 mm (5/8 inch) mortar cover from either face. Refer to specification section 04220 NON-BEARING MASONRY VENEER/STEEL STUD WALLS for anchors at steel stud walls.

2.12.1 Wire Mesh Ties

Wire mesh for tying 100 mm (4 inch) thick concrete masonry unit partitions to other intersecting masonry partitions shall be 13 mm (1/2 inch) mesh of minimum 16 gauge steel wire. Minimum lengths shall be not less than 300 mm (12 inches).

2.12.2 Wall Ties

Wall ties shall be rectangular-shaped or Z-shaped fabricated of 5 mm (3/16 inch) diameter zinc-coated steel wire. Rectangular wall ties shall be no less than 100 mm (4 inches) wide. Wall ties may also be of a continuous type conforming to paragraph JOINT REINFORCEMENT. Adjustable type wall ties, if approved for use, shall consist of two essentially U-shaped elements fabricated of 5 mm (3/16 inch) diameter zinc-coated steel wire. Adjustable ties shall be of the double pintle to eye type and shall allow a maximum of 13 mm (1/2 inch) eccentricity between each element of the tie. Play between pintle and eye opening shall be not more than 2 mm (1/16 inch).. The pintle and eye elements shall be formed so that both can be in the same plane.

2.12.3 Not Used

2.12.4 Adjustable Anchors

Adjustable anchors shall be 5 mm (3/16 inch) diameter steel wire, triangular-shaped. Anchors attached to steel shall be 8 mm (5/16 inch) diameter steel bars placed to provide 2 mm (1/16 inch) play between flexible anchors and structural steel members. Spacers shall be welded to rods and columns. Equivalent welded-on steel anchor rods or shapes standard with the flexible-anchor manufacturer may be furnished when approved. Welds shall be cleaned and given one coat of zinc-rich touch up paint.

2.12.5 Bar Positioners

Bar positioners, used to prevent displacement of reinforcing bars during the course of construction, shall be fabricated from 9 gauge steel wire or equivalent, and coated with a hot-dip galvanized finish. Not more than one wire shall cross the cell.

2.13 JOINT REINFORCEMENT

Joint reinforcement shall be factory fabricated from steel wire conforming

to ASTM A 82, welded construction. Tack welding will not be acceptable in reinforcement used for wall ties. Wire shall have zinc coating conforming to ASTM A 153, Class B-2. All wires shall be a minimum of 9 gauge. Reinforcement shall be ladder type design, having one longitudinal wire in the mortar bed of each face shell for hollow units and one wire for solid units. Joint reinforcement shall be placed a minimum of 16 mm (5/8 inch) cover from either face. The distance between crosswires shall not exceed 400 mm (16 inches). Joint reinforcement for straight runs shall be furnished in flat sections not less than 3 m (10 feet) long. Joint reinforcement shall be provided with factory formed corners and intersections. If approved for use, joint reinforcement may be furnished with adjustable wall tie features.

2.14 REINFORCING STEEL BARS AND RODS

Reinforcing steel bars and rods shall conform to ASTM A 615/A 615M, Grade 60.

2.15 CONTROL JOINT KEYS

Control joint keys shall be a factory fabricated solid section of natural or synthetic rubber (or combination thereof) conforming to ASTM D 2000or polyvinyl chloride conforming to ASTM D 2287. The material shall be resistant to oils and solvents. The control joint key shall be provided with a solid shear section not less than 16 mm (5/8 inch) thick and 10 mm (3/8 inch) (3/8 inch) thick flanges, with a tolerance of plus or minus 2 mm (1/16 inch). The control joint key shall fit neatly, but without forcing, in masonry unit jamb sash grooves. The control joint key shall be flexible at a temperature of minus 34 degrees C (minus 30 degrees F) (minus 30 degrees F) after five hours exposure, and shall have a durometer hardness of not less than 70 when tested in accordance with ASTM D 2240.

2.16 EXPANSION-JOINT MATERIALS

Backer rod and sealant shall be adequate to accommodate joint compression equal to 50 percent of the width of the joint. The backer rod shall be compressible rod stock of polyethylene foam, polyurethane foam, butyl rubber foam, or other flexible, nonabsorptive material as recommended by the sealant manufacturer. Sealant shall conform to Section 07900 JOINT SEALING.

2.17 INSULATION

2.17.1 Rigid Board-Type Insulation for Cavity Walls

At locations between two wythes of masonry, rigid board-type cavity wall insulation shall be polyisocyanurate. Polyisocyanurate shall conform to ASTM C 1289, Type I, Class 2, faced with foil facers on both sides of the foam. The insulation shall be a standard product and shall be marked with not less than the manufacturer's trademark or name, the specification number, the permeance and R-values. Refer to 04220 NONBEARING MASONRY VENEER/STEEL STUD WALLS for insulation at metal stud wall locations.

2.17.1.1 Insulation Thickness and Air Space

The typical cavity space shall allow for a maximum insulation thickness of 50 mm, 50 mm (2 inches), and a minimum air space of 38mm (1 1/2 inches),unless otherwise indicated on Drawings.

2.17.1.2 Aged R-Value

The insulation shall provide a minimum aged R-value of R=7.2 per 31.8 mm (1 inch) of overall thickness. The aged R-value shall be determined at 24 degrees C (75 degrees F) in accordance with the appropriate referenced specification. The stated R-value of the insulation shall be certified by an independent testing laboratory or certified by an independent Registered Professional Engineer if tests are conducted in the manufacturer's laboratory.

2.17.1.3 Recovered Material

Insulation shall contain the highest practicable percentage of recovered material derived from solid waste (but material reused in the manufacturing process cannot be counted toward the percentage of recovered material). Where two materials have the same price and performance, the one containing the higher recovered material content shall be provided. The polyurethane or polyisocyanurate foam shall have a minimum recovered material content of 9 percent by weight of the core material.

2.17.2 Insulation Adhesive

Insulation adhesive shall be specifically prepared to adhere the insulation to the masonry and, where applicable, to the thru-wall flashing. The adhesive shall not deleteriously affect the insulation, and shall have a record of satisfactory and proven performance for the conditions under which to be used.

2.18 FLASHING

Flashing shall be as specified in Section 07600 SHEET METALWORK, GENERAL.

2.19 WEEP HOLES

Weepholes shall be cotton sash cord of a length required to produce a 50 mm (2 inch) exposure on exterior and provide a 900 mm (18 inch) length within cavity.

2.20 Compressible Filler

Closed neoprene sponge conforming to ASTM D-2240, 10mm (3/8 inch)thick, 75 mm (3 inches) wide. for use at veritcal control joints and bleow horizontal relieving angles.

PART 3 EXECUTION

3.1 ENVIRONMENTAL REQUIREMENTS

3.1.1 Hot Weather Installation

The following precautions shall be taken if masonry is erected when the ambient air temperature is more than 37 degrees C (99 degrees F) in the shade and the relative humidity is less than 50 percent. All masonry materials shall be shaded from direct sunlight; mortar beds shall be spread no more than 1.2 m (4 feet) ahead of masonry; masonry units shall be set within one minute of spreading mortar; and after erection, masonry shall be protected from direct exposure to wind and sun for 48 hours.

3.1.2 Cold Weather Installation

Before erecting masonry when ambient temperature or mean daily air temperature falls below 4 degrees C, (40 degrees F), a written statement of proposed cold weather construction procedures shall be submitted for approval. The following precautions shall be taken during all cold weather erection.

3.1.2.1 Preparation

Ice or snow formed on the masonry bed shall be thawed by the application of heat. Heat shall be applied carefully until the top surface of the masonry is dry to the touch. Sections of masonry deemed frozen and damaged shall be removed before continuing construction of those sections.

a. Air Temperature 4 to 0 degrees C. (40 to 32 Degrees F). Sand or mixing water shall be heated to produce mortar temperatures between 4 degrees C and 49 degrees C. (40 degrees F and 120 degrees F).

b. Air Temperature 0 to minus 4 degrees C. (32 to 25 Degrees F). Sand and mixing water shall be heated to produce mortar temperatures between 4 degrees C and 49 degrees C. (40 degrees F and 120 degrees F). Temperature of mortar on boards shall be maintained above freezing.

c. Air Temperature minus 4 to minus 7 degrees C. (25 to 20 Degrees F). Sand and mixing water shall be heated to provide mortar temperatures between 4 degrees C and 49 degrees C. (40 degrees F and 120 degrees F). Temperature of mortar on boards shall be maintained above freezing. Sources of heat shall be used on both sides of walls under construction. Windbreaks shall be employed when wind is in excess of 24 km/hour. (15 mph).

d. Air Temperature minus 7 degrees C (20 Degrees F and below). Sand and mixing water shall be heated to provide mortar temperatures between 4 degrees C and 49 degrees C. (40 degrees F and 120 degrees F). Enclosure and auxiliary heat shall be provided to maintain air temperature above 0 degrees C. (32 degrees F). Temperature of units when laid shall not be less than minus 7 degrees C. (20 degrees F).

3.1.2.2 Completed Masonry and Masonry Not Being Worked On

a. Mean daily air temperature 4 degrees C to 0 degrees C. (40 degrees F to 32 degrees F). Masonry shall be protected from rain or snow for 24 hours by covering with weather-resistive membrane.

b. Mean daily air temperature 0 degrees C to minus 4 degrees C. (32 degrees F to 25 degrees F). Masonry shall be completely covered with weather-resistant membrane for 24 hours.

c. Mean Daily Air Temperature minus 4 degrees C to minus 7 degrees C. (25 Degrees F to 20 Degrees F). Masonry shall be completely covered with insulating blankets or equally protected for 24 hours.

d. Mean Daily Temperature minus 7 degrees C (20 Degrees F) and Below. Masonry temperature shall be maintained above 0 degrees C (32 degrees F) for 24 hours by enclosure and supplementary heat, by electric heating blankets, infrared heat lamps, or other approved

methods.

3.2 LAYING MASONRY UNITS

Masonry units shall be laid in running bond pattern. Facing courses shall be level with back-up courses, unless the use of adjustable ties has been approved in which case the tolerances shall be plus or minus (1/2 inch). Each unit shall be adjusted to its final position while mortar is still soft and plastic. Units that have been disturbed after the mortar has stiffened shall be removed, cleaned, and relaid with fresh mortar. Air spaces, cavities, chases, expansion joints, and spaces to be grouted shall be kept free from mortar and other debris. Units used in exposed masonry surfaces shall be selected from those having the least amount of chipped edges or other imperfections detracting from the appearance of the finished work. Vertical joints shall be kept plumb. Units being laid and surfaces to receive units shall be free of water film and frost. Solid units shall be laid in a non furrowed full bed of mortar. Mortar for veneer wythes shall be beveled and sloped toward the center of the wythe from the cavity side. Units shall be shoved into place so that the vertical joints are tight. Vertical joints of brick and the vertical face shells of concrete masonry units, except where indicated at control, expansion, and isolation joints, shall be completely filled with mortar. Mortar will be permitted to protrude up to 13 mm (1/2 inch) into the space or cells to be grouted. Means shall be provided to prevent mortar from dropping into the space below. In double wythe construction, the inner wythe may be brought up not more than 400 mm (16 inches) ahead of the outer wythe. Collar joints shall be filled with mortar or grout during the laying of the facing wythe, and filling shall not lag the laying of the facing wythe by more than 200 mm. (8 inches).

3.2.1 Surface Preparation

Surfaces upon which masonry is placed shall be cleaned of laitance, dust, dirt, oil, organic matter, or other foreign materials and shall be slightly roughened to provide a surface texture with a depth of at least 3 mm. (1/8 inch). Sandblasting shall be used, if necessary, to remove laitance from pores and to expose the aggregate.

3.2.2 Forms and Shores

Forms and shores shall be sufficiently rigid to prevent deflections which may result in cracking or other damage to supported masonry and sufficiently tight to prevent leakage of mortar and grout. Supporting forms and shores shall not be removed in less than 10 days.

3.2.3 Concrete Masonry Units

Units in piers, pilasters, columns, starting courses on footings, solid foundation walls, lintels, and beams, and where cells are to be filled with grout shall be full bedded in mortar under both face shells and webs. Other units shall be full bedded under both face shells. Head joints shall be filled solidly with mortar for a distance in from the face of the unit not less than the thickness of the face shell. Foundation walls below grade shall be grouted solid. Jamb units shall be of the shapes and sizes to conform with wall units. Solid units may be incorporated in the masonry work where necessary to fill out at corners, gable slopes, and elsewhere as approved. Double walls shall be stiffened at wall-mounted plumbing fixtures by use of strap anchors, two above each fixture and two below each fixture, located to avoid pipe runs, and extending from center to center of

the double wall. Walls and partitions shall be adequately reinforced for support of wall-hung plumbing fixtures when chair carriers are not specified.

3.2.4 Clay or Shale Brick Units

Brick facing shall be laid with the better face exposed. Brick shall be laid in running bond with each course bonded at corners, unless otherwise indicated. Molded brick shall be laid with the frog side down. Brick that is cored, recessed, or has other deformations may be used in sills, treads, soldier courses, except where deformations will be exposed to view.

3.2.4.1 Wetting of Units

Wetting of clay, shale brick, or hollow brick units having an initial rate of absorption of more than 0.155 gm per minute per square cm (1 gm per minute per square inch) (1 gram per minute per square inch) of bed surface shall be in conformance with ASTM C 67. The method of wetting shall ensure that each unit is nearly saturated but surface dry when laid.

3.2.4.2 Solid Units

Bed, head, and collar joints shall be completely filled with mortar.

3.2.4.3 Hollow Units

Hollow units shall be laid as specified for concrete masonry units.

3.2.5 Tolerances

Masonry shall be laid plumb, true to line, with courses level. Bond pattern shall be kept plumb throughout. Corners shall be square unless noted otherwise. Except for walls constructed of prefaced concrete masonry units, masonry shall be laid within the following tolerances (plus or minus unless otherwise noted):

TABLE II

TOLERANCES

Variation from the plumb in the lines and surfaces of columns, walls and arises	
In adjacent masonry units	3 mm(1/8 inch)
In 3 m(10 ft)	6 mm(1/4 inch)
In 6 m(20 ft)	10 mm(3/8 inch)
In 12 m or more(40 ft or more)	13 mm(1/2 inch)
Variations from the plumb for external corners, expansion joints, and other conspicuous lines	
In 6 m(20 ft)	6 mm(1/4 inch)
In 12 m or more(40 ft or more)	13 mm(1/2 inch)
Variations from the level for exposed lintels, sills, parapets, horizontal grooves, and other conspicuous lines	

TOLERANCES

In 6 m(20 ft)	6 mm(1/4 inch)
In 12 m or more(40 ft or more)	13 mm(1/2 inch)
Variation from level for bed joints and top surfaces of bearing walls	
In 3 m(10 ft)	6 mm(1/4 inch)
In 12 m or more(40 ft or more)	13 mm(1/2 inch)
Variations from horizontal lines	
In 3 m(10 ft)	6 mm(1/4 inch)
In 6 m(20 ft)	10 mm(3/8 inch)
In 12 m or more(40 ft or more)	13 mm(1/2 inch)
Variations in cross sectional dimensions of columns and in thickness of walls	
Minus	6 mm(1/4 inch)
Plus	13 mm(1/2 inch)

3.2.6 Cutting and Fitting

Full units of the proper size shall be used wherever possible, in lieu of cut units. Cutting and fitting, including that required to accommodate the work of others, shall be done by masonry mechanics using power masonry saws. Concrete masonry units may be wet or dry cut. Wet cut units, before being placed in the work, shall be dried to the same surface-dry appearance as uncut units being laid in the wall. Cut edges shall be clean, true and sharp. Openings in the masonry shall be made carefully so that wall plates, cover plates or escutcheons required by the installation will completely conceal the openings and will have bottoms parallel with the masonry bed joints. Reinforced masonry lintels shall be provided above openings over 300 mm (12 inches) wide for pipes, ducts, cable trays, and other wall penetrations, unless steel sleeves are used.

3.2.7 Jointing

Joints shall be tooled when the mortar is thumbprint hard. Horizontal joints shall be tooled last. Joints shall be brushed to remove all loose and excess mortar. Mortar joints shall be finished as follows:

3.2.7.1 Flush Joints

Joints in concealed masonry surfaces and joints at electrical outlet boxes in wet areas shall be flush cut. Flush cut joints shall be made by cutting off the mortar flush with the face of the wall. Joints in unparged masonry walls below grade shall be pointed tight. Flush joints for architectural units, such as fluted units, shall completely fill both the head and bed joints.

3.2.7.2 Tooled Joints

Joints in exposed exterior and interior masonry surfaces shall be tooled slightly concave. Joints shall be tooled with a jointer slightly larger than the joint width so that complete contact is made along the edges of the unit. Tooling shall be performed so that the mortar is compressed and the joint surface is sealed. Jointer of sufficient length shall be used to obtain a straight and true mortar joint.

3.2.7.3 Door and Window Frame Joints

On the exposed interior side of exterior frames, joints between frames and abutting masonry walls shall be raked to a depth of 10 mm. (3/8 inch). On the exterior side of exterior frames, joints between frames and abutting masonry walls shall be raked to a depth of 10 mm. (3/8 inch).

3.2.8 Joint Widths

Joint widths shall be as follows:

3.2.8.1 Concrete Masonry Units

Concrete masonry units shall have 10 mm (3/8 inch) joints.

3.2.8.2 Not Used

3.2.8.3 Brick

Brick joint widths shall be the difference between the actual and nominal dimensions of the brick in either height or length. Brick expansion joint widths shall be as shown.

3.2.9 Embedded Items

Spaces around built-in items shall be filled with mortar. Openings around flush-mount electrical outlet boxes in wet locations shall be pointed with mortar. Anchors, ties, wall plugs, accessories, flashing, pipe sleeves and other items required to be built-in shall be embedded as the masonry work progresses. Anchors, ties and joint reinforcement shall be fully embedded in the mortar. Cells receiving anchor bolts and cells of the first course below bearing plates shall be filled with grout.

3.2.10 Unfinished Work

Unfinished work shall be stepped back for joining with new work. Toothing may be resorted to only when specifically approved. Loose mortar shall be removed and the exposed joints shall be thoroughly cleaned before laying new work.

3.2.11 Masonry Wall Intersections

Each course shall be masonry bonded at corners and elsewhere as shown. Masonry walls shall be anchored or tied together at corners and intersections with bond beam reinforcement and prefabricated corner or tee pieces of joint reinforcement as shown.

3.2.12 Partitions

Partitions shall be continuous from floor to underside of floor or roof deck where shown. Openings in firewalls around joists or other structural

members shall be filled as indicated or approved. Where suspended ceilings on both sides of partitions are indicated, the partitions other than those to be fire-rated may be stopped approximately 100 mm (4 inches) above the ceiling level. An isolation joint shall be placed in the intersection between partitions and structural or exterior walls as shown. Interior partitions having 100 mm (4 inch) nominal thick units shall be tied to intersecting partitions of 100 mm (4 inch) units, 125 mm (5 inches) into partitions of 150 mm (6 inch) units, and 175 mm (7 inches) into partitions of 200 mm (8 inch) or thicker units. Cells within vertical plane of ties shall be filled solid with grout for full height of partition or solid masonry units may be used. Interior partitions having masonry walls over 100 mm (4 inches) thick shall be tied together with joint reinforcement. Partitions containing joint reinforcement shall be provided with prefabricated pieces at corners and intersections or partitions.

3.3 ANCHORED VENEER CONSTRUCTION

The inner and outer wythes shall be completely separated by a continuous airspace as shown on the drawings. Both the inner and the outer wythes shall be laid up together except when adjustable joint reinforcement assemblies are approved for use. When both wythes are not brought up together, through-wall flashings shall be protected from damage until they are fully enclosed in the wall. The airspace between the wythes shall be kept clear and free of mortar droppings by temporary wood strips laid on the wall ties and carefully lifted out before placing the next row of ties. A coarse gravel or drainage material shall be placed behind the weep holes in the cavity to a minimum depth of 100 mm (4 inches) of coarse aggregate or 250 mm (10 inches) of drainage material to keep mortar droppings from plugging the weep holes.

3.4 WEEP HOLES

Weep holes shall be provided not more than 600 mm (24 inches) on centers in mortar joints of the exterior wythe above wall flashing, over foundations, bond beams, and any other horizontal interruptions of the cavity. Weep holes shall be formed by placing short lengths of well-greased No. 10, 8 mm (5/16 inch) nominal diameter, braided cotton sash cord in the mortar and withdrawing the cords after the wall has been completed. Other approved methods may be used for providing weep holes. Weep holes shall be kept free of mortar and other obstructions.

3.5 COMPOSITE WALLS

Masonry wythes shall be tied together with joint reinforcement or with unit wall ties. Facing shall be anchored to concrete backing with wire dovetail anchors set in slots built in the face of the concrete as specified in Section 03300 CAST-IN-PLACE STRUCTURAL CONCRETE. The facing wythe shall be anchored or tied to the backup at a maximum spacing of 400 mm (16 inches) on center vertically and 600 mm (24 inches) on center horizontally. Unit ties shall be spaced not over 600 mm (24 inches) on centers horizontally, in courses not over 400 mm (16 inches) apart vertically, staggered in alternate courses. Ties shall be laid not closer than 16 mm (5/8 inch) to either masonry face. Ties shall not extend through control joints. Collar joints between masonry facing and masonry backup shall be filled solidly with grout.

3.6 Not Used

3.7 Not Used

3.8 Not Used

3.9 MORTAR

Mortar shall be mixed in a mechanically operated mortar mixer for at least 3 minutes, but not more than 5 minutes. Measurement of ingredients for mortar shall be by volume. Ingredients not in containers, such as sand, shall be accurately measured by the use of measuring boxes. Water shall be mixed with the dry ingredients in sufficient amount to provide a workable mixture which will adhere to the vertical surfaces of masonry units. Mortar that has stiffened because of loss of water through evaporation shall be retempered by adding water to restore the proper consistency and workability. Mortar that has reached its initial set or that has not been used within 2-1/2 hours after mixing shall be discarded.

3.10 REINFORCING STEEL

Reinforcement shall be cleaned of loose, flaky rust, scale, grease, mortar, grout, or other coating which might destroy or reduce its bond prior to placing grout. Bars with kinks or bends not shown on the drawings shall not be used. Reinforcement shall be placed prior to grouting. Unless otherwise indicated, vertical wall reinforcement shall extend to within 50 mm (2 inches) of tops of walls.

3.10.1 Positioning Bars

Vertical bars shall be accurately placed within the cells at the positions indicated on the drawings. A minimum clearance of 13 mm (1/2 inch) shall be maintained between the bars and masonry units. Minimum clearance between parallel bars shall be one diameter of the reinforcement. Vertical reinforcing may be held in place using bar positioners located near the ends of each bar and at intermediate intervals of not more than 192 diameters of the reinforcement. Column and pilaster ties shall be wired in position around the vertical steel. Ties shall be in contact with the vertical reinforcement and shall not be placed in horizontal bed joints.

3.10.2 Splices

Bars shall be lapped a minimum of 48 diameters of the reinforcement. Welded or mechanical connections shall develop at least 125 percent of the specified yield strength of the reinforcement.

3.11 JOINT REINFORCEMENT

Joint reinforcement shall be installed at 400 mm (16 inches) on center or as indicated. Reinforcement shall be lapped not less than 150 mm. (6 inches). Prefabricated sections shall be installed at corners and wall intersections. The longitudinal wires of joint reinforcement shall be placed to provide not less than 16 mm (5/8 inch) cover to either face of the unit.

3.12 PLACING GROUT

Cells containing reinforcing bars shall be filled with grout. Hollow masonry units in walls or partitions supporting plumbing, heating, or other mechanical fixtures, voids at door and window jambs, and other indicated spaces shall be filled solid with grout. Cells under lintel bearings on each side of openings shall be filled solid with grout for full height of

openings. Walls below grade, lintels, and bond beams shall be filled solid with grout. Units other than open end units may require grouting each course to preclude voids in the units. Grout not in place within 1-1/2 hours after water is first added to the batch shall be discarded. Sufficient time shall be allowed between grout lifts to preclude displacement or cracking of face shells of masonry units. If blowouts, flowouts, misalignment, or cracking of face shells should occur during construction, the wall shall be torn down and rebuilt.

3.12.1 Vertical Grout Barriers for Fully Grouted Walls

Grout barriers shall be provided not more than 10 m (30 feet) apart, or as required, to limit the horizontal flow of grout for each pour.

3.12.2 Horizontal Grout Barriers

Grout barriers shall be embedded in mortar below cells of hollow units receiving grout.

3.12.3 Grout Holes and Cleanouts

3.12.3.1 Grout Holes

Grouting holes shall be provided in slabs, spandrel beams, and other in-place overhead construction. Holes shall be located over vertical reinforcing bars or as required to facilitate grout fill in bond beams. Additional openings spaced not more than 400 mm (16 inches) on centers shall be provided where grouting of all hollow unit masonry is indicated. Openings shall not be less than 100 mm (4 inches) in diameter or 75 by 100 mm (3 by 4 inches) in horizontal dimensions. Upon completion of grouting operations, grouting holes shall be plugged and finished to match surrounding surfaces.

3.12.3.2 Cleanouts for Hollow Unit Masonry Construction

Cleanout holes shall be provided at the bottom of every pour in cores containing vertical reinforcement when the height of the grout pour exceeds 1.5 m. (5 feet). Where all cells are to be grouted, cleanout courses shall be constructed using bond beam units in an inverted position to permit cleaning of all cells. Cleanout holes shall be provided at a maximum spacing of 800 mm (32 inches) where all cells are to be filled with grout. A new series of cleanouts shall be established if grouting operations are stopped for more than 4 hours. Cleanouts shall not be less than 75 by 100 mm (3 by 4 inch) openings cut from one face shell. Manufacturer's standard cutout units may be used at the Contractor's option. Cleanout holes shall not be closed until masonry work, reinforcement, and final cleaning of the grout spaces have been completed and inspected. For walls which will be exposed to view, cleanout holes shall be closed in an approved manner to match surrounding masonry.

3.12.3.3 Cleanouts for Solid Unit Masonry Construction

Cleanouts for construction of walls consisting of a grout filled cavity between solid masonry wythes shall be provided at the bottom of every pour by omitting every other masonry unit from one wythe. A new series of cleanouts shall be established if grouting operations are stopped for more than 4 hours. Cleanout holes shall not be plugged until masonry work, reinforcement, and final cleaning of the grout spaces have been completed and inspected. For walls which will be exposed to view, cleanout holes

shall be closed in an approved manner to match surrounding masonry.

3.12.4 Grouting Equipment

3.12.4.1 Grout Pumps

Pumping through aluminum tubes will not be permitted. Pumps shall be operated to produce a continuous stream of grout without air pockets, segregation, or contamination. Upon completion of each day's pumping, waste materials and debris shall be removed from the equipment, and disposed of outside the masonry.

3.12.4.2 Vibrators

Internal vibrators shall maintain a speed of not less than 5,000 impulses per minute when submerged in the grout. At least one spare vibrator shall be maintained at the site at all times. Vibrators shall be applied at uniformly spaced points not further apart than the visible effectiveness of the machine. Duration of vibration shall be limited to time necessary to produce satisfactory consolidation without causing segregation.

3.12.5 Grout Placement

Masonry shall be laid to the top of a pour before placing grout. Grout shall not be placed in two-wythe solid unit masonry cavity until mortar joints have set for at least 3 days during hot weather and 5 days during cold damp weather. Grout shall not be placed in hollow unit masonry until mortar joints have set for at least 24 hours. Grout shall be placed using a hand bucket, concrete hopper, or grout pump to completely fill the grout spaces without segregation of the aggregates. Vibrators shall not be inserted into lower pours that are in a semi-solidified state. The height of grout pours and type of grout used shall be limited by the dimensions of grout spaces as indicated in Table III. Low-lift grout methods may be used on pours up to and including 1.5 m (5 feet) in height. High-lift grout methods shall be used on pours exceeding 1.5 m (5 feet) in height.

3.12.5.1 Low-Lift Method

Grout shall be placed at a rate that will not cause displacement of the masonry due to hydrostatic pressure of the grout. Mortar protruding more than (1/2 inch) into the grout space shall be removed before beginning the grouting operation. Grout pours (12 inches) or less in height shall be consolidated by mechanical vibration or by puddling. Grout pours over (12 inches) in height shall be consolidated by mechanical vibration and reconsolidated by mechanical vibration after initial water loss and settlement has occurred. Vibrators shall not be inserted into lower pours that are in a semi-solidified state. Low-lift grout shall be used subject to the limitations of Table III.

3.12.5.2 High-Lift Method

Mortar droppings shall be cleaned from the bottom of the grout space and from reinforcing steel. Mortar protruding more than 6 mm (1/4 inch) into the grout space shall be removed by dislodging the projections with a rod or stick as the work progresses. Reinforcing, bolts, and embedded connections shall be rigidly held in position before grouting is started. CMU units shall not be pre-wetted. Grout, from the mixer to the point of deposit in the grout space shall be placed as rapidly as practical by pumping and placing methods which will prevent segregation of the mix and

cause a minimum of grout splatter on reinforcing and masonry surfaces not being immediately encased in the grout lift. The individual lifts of grout shall be limited to 1.2 m (4 feet) in height. The first lift of grout shall be placed to a uniform height within the pour section and vibrated thoroughly to fill all voids. This first vibration shall follow immediately behind the pouring of the grout using an approved mechanical vibrator. After a waiting period sufficient to permit the grout to become plastic, but before it has taken any set, the succeeding lift shall be poured and vibrated 300 to 450 mm (12 to 18 inches) into the preceding lift. If the placing of the succeeding lift is going to be delayed beyond the period of workability of the preceding, each lift shall be reconsolidated by reworking with a second vibrator as soon as the grout has taken its settlement shrinkage. The waiting, pouring, and reconsolidation steps shall be repeated until the top of the pour is reached. The top lift shall be reconsolidated after the required waiting period. The high-lift grouting of any section of wall between vertical grout barriers shall be completed to the top of a pour in one working day unless a new series of cleanout holes is established and the resulting horizontal construction joint cleaned. High-lift grout shall be used subject to the limitations in Table III.

TABLE III

POUR HEIGHT AND TYPE OF GROUT FOR VARIOUS GROUT SPACE DIMENSIONS

Maximum Grout Pour Height (m) (4)	Grout Type	Grouting Procedure	Minimum Dimensions of the Total Clear Areas Within Grout Spaces and Cells (mm) (1,2) Multi wythe Masonry (3)	Hollow-unit Masonry
0.3	Fine	Low Lift	20	40 x 50
1.5	Fine	Low Lift	50	50 x 75
2.4	Fine	High Lift	50	50 x 75
3.6	Fine	High Lift	65	65 x 75
7.3	Fine	High Lift	75	75 x 75
0.3	Coarse	Low Lift	40	40 x 75
1.5	Coarse	Low Lift	50	65 x 75
2.4	Coarse	High Lift	50	75 x 75
3.6	Coarse	High Lift	65	75 x 75
7.3	Coarse	High Lift	75	75 x 100

Notes:

(1) The actual grout space or cell dimension must be larger than the sum of the following items:
a) The required minimum dimensions of total clear areas given in the table above;
b) The width of any mortar projections within the space;
c) The horizontal projections of the diameters of the horizontal reinforcing bars within a cross section of the grout space or cell.

(2) The minimum dimensions of the total clear areas shall be made up of one or more open areas, with at least one area being 20 mm 3/4 inchor greater in width.

(3) For grouting spaces between masonry wythes.

(4) Where only cells of hollow masonry units containing reinforcement are grouted, the maximum height of the pour shall not exceed the distance between horizontal bond beams.

3.13 BOND BEAMS

Bond beams shall be filled with grout and reinforced as indicated on the drawings. Grout barriers shall be installed under bond beam units to retain the grout as required. Reinforcement shall be continuous, including around corners, except through control joints or expansion joints, unless otherwise indicated on the drawings. Where splices are required for continuity, reinforcement shall be lapped 48 bar diameters. A minimum clearance of 13 mm (1/2 inch) shall be maintained between reinforcement and interior faces of units.

3.14 CONTROL JOINTS

Control joints shall be provided as indicated and shall be constructed by using mortar to fill the head joint in accordance with the details shown on the drawings. The vertical mortar joint at control joint locations shall be continuous, including through all bond beams. This shall be accomplished by utilizing half blocks in alternating courses on each side of the joint. The control joint key shall be interrupted in courses containing continuous bond beam steel. In single wythe exterior masonry walls, the exterior control joints shall be raked to a depth of 20 mm; (3/4 inch); backer rod and sealant shall be installed in accordance with Section 07900 JOINT SEALING. Exposed interior control joints shall be raked to a depth of 6 mm (1/4 inch). Concealed control joints shall be flush cut.

3.15 BRICK EXPANSION JOINTS AND CONCRETE MASONRY VENEER JOINTS

Brick expansion joints and concrete masonry veneer joints shall be provided and constructed as shown on the drawings. Joints shall be kept free of mortar and other debris.

3.16 SHELF ANGLES

Shelf angles shall be adjusted as required to keep the masonry level and at the proper elevation. Shelf angles shall be provided in sections not longer than 3 m (10 feet) and installed with a 6 mm (1/4 inch) gap between sections. Shelf angles shall be mitered and welded at building corners with each angle not shorter than 1.2 m, (4 feet), unless limited by wall configuration.

3.17 LINTELS

3.17.1 Masonry Lintels

Masonry lintels shall be constructed with lintel units filled solid with grout in all courses and reinforced with a minimum of two No. 4 bars in the bottom course unless otherwise indicated on the drawings. Lintel reinforcement shall extend beyond each side of masonry opening 40 bar diameters or 600 mm, (24 inches), whichever is greater. Reinforcing bars shall be supported in place prior to grouting and shall be located 15 mm (1/2 inch) above the bottom inside surface of the lintel unit.

3.18 SILLS AND COPINGS

Sills and copings shall be set in a full bed of mortar with faces plumb and

true.

3.19 ANCHORAGE TO CONCRETE AND STRUCTURAL STEEL

3.19.1 Anchorage to Concrete

Anchorage of masonry to the face of concrete columns, beams, or walls shall be with dovetail anchors spaced not over 400 mm (16 inches) on centers vertically and 600 mm (24 inches) on center horizontally.

3.19.2 Anchorage to Structural Steel

Masonry shall be anchored to vertical structural steel framing with adjustable steel wire anchors spaced not over 400 mm (16 inches) on centers vertically, and if applicable, not over 600 mm (24 inches) on centers horizontally.

3.20 Not Used

3.21 INSULATION

Anchored veneer walls shall be insulated, where shown, by installing board-type insulation on the cavity side of the inner wythe. Board type insulation shall be applied directly to the masonry or thru-wall flashing with adhesive. Insulation shall be neatly fitted between obstructions without impaling of insulation on ties or anchors. The insulation shall be applied in parallel courses with vertical joints breaking midway over the course below and shall be applied in moderate contact with adjoining units without forcing, and shall be cut to fit neatly against adjoining surfaces.

3.22 Not Used

3.23 POINTING AND CLEANING

After mortar joints have attained their initial set, but prior to hardening, mortar and grout daubs or splashings shall be completely removed from masonry-unit surfaces that will be exposed or painted. Before completion of the work, defects in joints of masonry to be exposed or painted shall be raked out as necessary, filled with mortar, and tooled to match existing joints. Immediately after grout work is completed, scum and stains which have percolated through the masonry work shall be removed using a high pressure stream of water and a stiff bristled brush. Masonry surfaces shall not be cleaned, other than removing excess surface mortar, until mortar in joints has hardened. Masonry surfaces shall be left clean, free of mortar daubs, dirt, stain, and discoloration, including scum from cleaning operations, and with tight mortar joints throughout. Metal tools and metal brushes shall not be used for cleaning.

3.23.1 Concrete Masonry Unit and Concrete Brick Surfaces

Exposed concrete masonry unit and concrete brick surfaces shall be dry-brushed at the end of each day's work and after any required pointing, using stiff-fiber bristled brushes.

3.23.2 Clay or Shale Brick Surfaces

Exposed clay or shale brick masonry surfaces shall be cleaned as necessary to obtain surfaces free of stain, dirt, mortar and grout daubs,

efflorescence, and discoloration or scum from cleaning operations. After cleaning, the sample panel of similar material shall be examined for discoloration or stain as a result of cleaning. If the sample panel is discolored or stained, the method of cleaning shall be changed to assure that the masonry surfaces in the structure will not be adversely affected. The exposed masonry surfaces shall be water-soaked and then cleaned with a proprietary masonry cleaning agent specifically recommended for the color and texture by the clay products manufacturer. The solution shall be applied with stiff fiber brushes, followed immediately by thorough rinsing with clean water. Proprietary cleaning agents shall be used in conformance with the cleaning product manufacturer's printed recommendations. Efflorescence shall be removed in conformance with the brick manufacturer's recommendations.

3.24 BEARING PLATES

Bearing plates for beams, joists, joist girders and similar structural members shall be set to the proper line and elevation with damp-pack bedding mortar, except where non-shrink grout is indicated. Bedding mortar and non-shrink grout shall be as specified in Section 03300 CAST-IN-PLACE STRUCTURAL CONCRETE.

3.25 PROTECTION

Facing materials shall be protected against staining. Top of walls shall be covered with nonstaining waterproof covering or membrane when work is not in progress. Covering of the top of the unfinished walls shall continue until the wall is waterproofed with a complete roof or parapet system. Covering shall extend a minimum of 600 mm (2 feet) down on each side of the wall and shall be held securely in place. Before starting or resuming, top surface of masonry in place shall be cleaned of loose mortar and foreign material.

3.26 TEST REPORTS

3.26.1 Field Testing of Mortar

At least three specimens of mortar shall be taken each day. A layer of mortar 13 to 16 mm (1/2 to 5/8 inch) thick shall be spread on the masonry units and allowed to stand for one minute. The specimens shall then be prepared and tested for compressive strength in accordance with ASTM C 780.

3.26.2 Field Testing of Grout

Field sampling and testing of grout shall be in accordance with the applicable provisions of ASTM C 1019. A minimum of three specimens of grout per day shall be sampled and tested. Each specimen shall have a minimum ultimate compressive strength of 13.8 MPa (2000 psi) at 28 days.

3.26.3 Efflorescence Test

Brick which will be exposed to weathering shall be tested for efflorescence. Tests shall be scheduled far enough in advance of starting masonry work to permit retesting if necessary. Sampling and testing shall conform to the applicable provisions of ASTM C 67. Units meeting the definition of "effloresced" will be subject to rejection.

3.26.4 Prism Tests

At least one prism test sample shall be made for each 465 square meters 5,000 square feet of wall but not less than three such samples shall be made for any building. Three prisms shall be used in each sample. Prisms shall be tested in accordance with ASTM E 447. Seven-day tests may be used provided the relationship between the 7- and 28-day strengths of the masonry is established by the tests of the materials used. If the compressive strength of any prism falls below the specified value by more than 3.5 MPa, 500 psi, steps shall be taken to assure that the load-carrying capacity of the structure is not jeopardized. If the likelihood of low-strength masonry is confirmed and computations indicate that the load-carrying capacity may have been significantly reduced, tests of cores drilled, or prisms sawed, from the area in question may be required. In such case, three specimens shall be taken for each prism test more than 3.5 MPa 500 psi below the specified value. Masonry in the area in question shall be considered structurally adequate if the average compressive strength of three specimens is equal to at least 85 percent of the specified value, and if the compressive strength of no single specimen is less than 75 percent of the specified value. Additional testing of specimens extracted from locations represented by erratic core or prism strength test results shall be permitted.

-- End of Section --

SECTION TABLE OF CONTENTS

DIVISION 04 - MASONRY

SECTION 04220

NONBEARING MASONRY VENEER/STEEL STUD WALLS

09/98

PART 1 GENERAL

1.1 REFERENCES
1.2 SUBMITTALS
1.3 SAMPLE PANEL
1.4 DELIVERY, HANDLING AND STORAGE
1.5 EFFLORESCENCE TESTS

PART 2 PRODUCTS

2.1 VENEER WYTHE
2.1.1 Clay or Shale Brick
2.2 MORTAR
2.3 JOINT REINFORCEMENT
2.4 COLD-FORMED STEEL FRAMING
2.5 INSULATION
2.5.1 Blanket Insulation
2.5.2 Insulating Sheathing
2.6 GYPSUM WALLBOARD
2.7 EXTERIOR SHEATHING
2.8 MOISTURE PROTECTION
2.8.1 Moisture Barrier
2.8.2 Vapor Retarder
2.8.3 Staples
2.8.4 Joint Tape
2.9 VENEER ANCHORS
2.9.1 Adjustable Pintle-Eye Type Wire Anchors
2.10 CONNECTIONS
2.10.1 Framing Screws, Bolts and Anchors
2.10.2 Welding
2.10.3 Veneer Anchor Screws
2.10.4 Exterior Sheathing Screws
2.11 SYNTHETIC WASHERS
2.12 EXPANSION JOINT MATERIAL
2.13 FLASHING
2.14 STEEL LINTELS AND SHELF ANGLES
2.15 CAULKING AND SEALANTS

PART 3 EXECUTION

3.1 GENERAL INSTALLATION REQUIREMENTS
3.2 STEEL STUD WALL FRAMING
3.3 STEEL SHELF ANGLES
3.4 INSULATION
3.5 GYPSUM WALLBOARD
3.6 EXTERIOR SHEATHING

3.7 MOISTURE PROTECTION
3.7.1 Moisture Barrier
3.7.2 Vapor Retarder
3.8 VENEER ANCHORS
3.9 FLASHING
3.10 MASONRY VENEER
3.10.1 Surface Preparation
3.10.2 Hot Weather Construction
3.10.3 Cold Weather Construction
3.10.4 Tolerances
3.10.5 Mixing of Mortar
3.10.6 Cutting and Fitting
3.10.7 Masonry Units
3.10.8 Mortar Joints
3.10.9 Joint Reinforcement
3.10.10 Veneer Joints
3.10.11 Weep Holes
3.10.12 Head Joint Vents
3.10.13 Discontinuous Work
3.10.14 Cleaning
3.11 BUILDING EXPANSION JOINTS

-- End of Section Table of Contents --

SECTION 04220

NONBEARING MASONRY VENEER/STEEL STUD WALLS
09/98

PART 1 GENERAL

1.1 REFERENCES

The publications listed below form a part of this specification to the extent referenced. The publications are referred to in the text by the basic designation only.

AMERICAN INSTITUTE OF STEEL CONSTRUCTION (AISC)

AISC ASD Manual	(1989) Manual of Steel Construction Allowable Stress Design

AMERICAN IRON AND STEEL INSTITUTE (AISI)

AISI-01	(1996) Cold-Formed Steel Design Manual

AMERICAN SOCIETY FOR TESTING AND MATERIALS (ASTM)

ASTM A 36/A 36M	(1997a) Carbon Structural Steel
ASTM A 82	(1997) Steel Wire, Plain, for Concrete Reinforcement
ASTM A 123/A 123M	(1997a) Zinc (Hot-Dip Galvanized) Coatings on Iron and Steel Products
ASTM A 153/A 153M	(1995) Zinc Coating (Hot-Dip) on Iron and Steel Hardware
ASTM C 67	(1996) Sampling and Testing Brick and Structural Clay Tile
ASTM C 79/C 79M	(1997) Treated Core and Nontreated Core Gypsum Sheathing Board
ASTM C 665	(1995) Mineral-Fiber Blanket Thermal Insulation for Light Frame Construction and Manufactured Housing
ASTM C 954	(1996a) Steel Drill Screws for the Application of Gypsum Panel Products or Metal Plaster Bases to Steel Studs from 0.033 in. (0.84 mm) to 0.112 in. (2.84 mm) in Thickness
ASTM D 1056	(1991) Flexible Cellular Materials - Sponge or Expanded Rubber
ASTM D 1330	(1985; R 1995) Rubber Sheet Gaskets

ASTM D 1667	(1997) Flexible Cellular Materials - Vinyl Chlorine Polymers and Copolymers (Closed-Cell Foam)
ASTM D 2103	(1997) Polyethylene Film and Sheeting

AMERICAN WELDING SOCIETY (AWS)

AWS D1.3	(1989) Structural Welding Code - Sheet Steel

1.2 SUBMITTALS

Government approval is required for submittals with a "GA" designation; submittals having an "FIO" designation are for information only. The following shall be submitted in accordance with Section 01330 SUBMITTAL PROCEDURES:

SD-01 Data

Masonry Veneer/Steel Stud Wall System: Refer to requirements of 05400 COLD-FORMED STEEL FRAMING..

SD-04 Drawings

Masonry Veneer/Steel Stud Wall System: Refer to requirements of 05400 COLD-FORMED STEEL FRAMING..

SD-13 Certificates

Brick; FIO. Insulation; FIO. Exterior Sheathing; FIO. Moisture Barrier; FIO. Vapor Barrier; FIO. Veneer Anchors; FIO.

Certificates stating that the materials meet the requirements specified. Each certificate shall be signed by an authorized certification official and shall include their organization and position and shall identify the products covered under their certifying signature.

SD-14 Samples

FIO. A portable panel, approximately 600 by 600 mm (2 by 2 feet), containing approximately 24 brick facings to establish the range of color and texture, and one of each type of masonry veneer anchor used.

1.3 SAMPLE PANEL

After the material samples are approved and prior to starting masonry work, a sample masonry panel shall be built on the project site where directed. The sample panel shall be not less than 1.8 m (6 feet) long by 1.2 m (4 feet) high. The panel shall be of typical wall thickness for the construction represented. The panel shall show color range, texture, bond pattern, expansion joints, and cleaning of the masonry as required in the work. The panel shall also show cold-formed steel framing, insulation, gypsum wallboard, exterior sheathing, moisture barrier, vapor barrier, veneer anchors, joint reinforcement, steel shelf angles, flashing and weep holes. The approved sample panel shall be used as a standard of workmanship required in the actual installation. The sample panel shall be

protected from weather and construction operations and shall not be removed until the masonry veneer/steel stud wall work has been completed and accepted.

1.4 DELIVERY, HANDLING AND STORAGE

Materials shall be delivered and handled avoiding chipping, breakage, bending or other damage, and contact with soil or other contaminating materials. The masonry and cementitious products shall be stored in accordance with SECTION 04200 MASONRY. Finish of the framing members shall be maintained at all times, using an approved high zinc dust content galvanizing repair paint whenever necessary to prevent the formation of rust. Insulation, moisture barrier, and exterior sheathing shall be stored in dry, well ventilated, weather-tight areas protected from sunlight and excessive heat. Air infiltration type vapor barrier shall be stored in accordance with the manufacturer's recommendations.

1.5 EFFLORESCENCE TESTS

Efflorescence tests shall be performed by an approved commercial testing laboratory. Sampling for the tests shall be the responsibility of the Contractor. Brick shall be sampled and tested for efflorescence in accordance with ASTM C 67 and the rating shall be: "not effloresced".

PART 2 PRODUCTS

2.1 VENEER WYTHE

The source of masonry materials which will affect the appearance of the finished work shall not be changed after the work has started except with the Contracting Officer's approval.

2.1.1 Clay or Shale Brick

Clay or shale brick veneer shall be as specified in 04200 MASONRY.

2.2 MORTAR

Mortar shall be as specified in 04200 MASONRY.

2.3 JOINT REINFORCEMENT

Joint reinforcement shall be as specified in 04200 MASONRY.

2.4 COLD-FORMED STEEL FRAMING

Cold-formed framing for exterior masonry veneer steel stud wall systems shall be as specified in 05400 COLD-FORMED STEEL FRAMING. Metal framing for interior partitions are specified in Section 09250 GYPSUM WALLBOARD.

2.5 INSULATION

2.5.1 Blanket Insulation

Insulation placed between the steel studs shall be batt or blanket type mineral fiber conforming to ASTM C 665, Type I.

2.5.2 Insulating Sheathing

Insulating sheathing shall be provided in wall cavities at metal stud walls as indicated on drawings. Insulating sheathing shall comply with ASTM C1289, Type 1, Class 2 and shall have a rigid polyiscyanurate foam core with a reinforced radiant barrier aluminum foil facer bonded to each side. Insulating sheathing shall be equivalent to Tuff-R "C" Commercial Insulating sheathing and shall have a minimum aged thermal resistance (R-value)of R=8 at 24 degrees C (75 degrees F) per 31.8 mm (one inch) of thickness. Insulating sheathing shall be provided in 1200 by 2400 mm (4 by 8 foot) rigid boards and in thickness as indicated on drawings. Facers for insulating sheathing shall serve as the moisture barrier in cavity wall construction.

2.6 GYPSUM WALLBOARD

Gypsum wallboard that is installed on the interior side of the cold-formed steel framing system shall be as specified in Section 09250 GYPSUM WALLBOARD.

2.7 EXTERIOR SHEATHING

Exterior gypsum sheathing that is installed on the exterior side of the cold-formed steel framing system shall have a minimum thickness of 13 mm (1/2 inch) and shall be 1.2 m (4 feet) wide. Gypsum sheathing shall conform to ASTM C 79/C 79M. Gypsum sheathing shall have a water-resistant gypsum core with a water-repellent paper firmly bonded to the core.

2.8 MOISTURE PROTECTION

2.8.1 Moisture Barrier

Refer to 2.5.2 Insulating Sheathing for moisture barrier.

2.8.2 Vapor Retarder

The vapor retarder shall be polyethylene film conforming to ASTM D 2103, 0.15 mm (6 mil) minimum thickness.

2.8.3 Staples

Staples for attaching the moisture barrier to the exterior sheathing shall be the type and size best suited to provide a secure connection. Staples shall be made from either galvanized steel or stainless steel wire.

2.8.4 Joint Tape

Tape for sealing the joints in the vapor retarder shall be laminated tape with pressure sensitive adhesive as recommended by the manufacturer of the polyethylene film.

2.9 VENEER ANCHORS

Anchor assemblies for the attachment of the masonry veneer to the cold-formed steel framing, structural steel members, and precast concrete floor slabs shall be designed for the design loadings shown. Anchors shall transfer the design loadings from the masonry veneer to the cold-formed steel framing system or other support without exceeding the allowable stresses and deflections in the anchors. Length of anchor wires shall be such that the outermost wires lie between 32 mm (1-1/4 inch) from each face of the masonry veneer. Anchors wires shall not have drips. Wires for

veneer anchors shall be rectangular or triangular hoops formed from 5 mm (3/16 inch) diameter steel wire conforming to ASTM A 82. Anchor assemblies including wires and anchor plates shall be hot-dip galvanized conforming to ASTM A 153/A 153M, Class B-2. The veneer anchor shall have a minimum capacity of 900 newtons (200 pounds). The load-displacement capacity of each veneer anchor, both in direct pull-out for tension and compression, shall be not less than 350 kilo newtons per meter (2000 pounds per inch) or a deflection of 2.85 mm per kilo newton (0.05 inches per 100 pounds) of load in tension or compression). In the direction perpendicular to the masonry veneer, the anchor assembly shall have a maximum play of 1.6 mm. (1/16 inch).

2.9.1 Adjustable Pintle-Eye Type Wire Anchors

Adjustable pintle-eye type wall anchors shall be two piece rectangular type double pintle anchors.

2.10 CONNECTIONS

Screws, bolts and anchors shall be hot-dip galvanized in accordance with ASTM A 123/A 123M or ASTM A 153/A 153M as appropriate.

2.10.1 Framing Screws, Bolts and Anchors

Screws, bolts and anchors used in the assembly of the cold-formed steel framing system shall be as required by design of the framing system for the specified loading. Screw, bolt and anchor sizes shall be shown on the detail drawings.

2.10.2 Welding

Welded connections shall be designed and all welding shall be performed in accordance with AWS D1.3, as modified by AISI-01. Welders shall be qualified in accordance with AWS D1.3. All welds shall be cleaned and touched-up with zinc-rich paint.

2.10.3 Veneer Anchor Screws

Screws for attachment of the veneer anchors to the cold-formed steel framing members shall be stainless steel, #12 diameter, equivalent to "SX" Fastener by SFS Stadler. The length of screws shall be such that the screws penetrate the holding member by not less than 16 mm. (5/8 inch).

2.10.4 Exterior Sheathing Screws

Screws for attachment of gypsum sheathing to cold-formed steel framing shall conform to ASTM C 954.

2.11 SYNTHETIC WASHERS

Synthetic neoprene or rubber washers for placement between veneer anchors and the moisture barrier on the outside face of the exterior sheathing shall conform to ASTM D 1330, Grade I.

2.12 EXPANSION JOINT MATERIAL

Premolded type shall be closed-cell cellular rubber conforming to ASTM D 1056 or closed-cell vinyl or polyvinyl chloride conforming to ASTM D 1667.

2.13 FLASHING

Through-wall flashing shall conform to the requirements in Section 07600 SHEET METALWORK, GENERAL. Flashing shall be supplied in a continuous sheet extending from the exterior sheathing across the cavity and through the masonry veneer as shown.

2.14 STEEL LINTELS AND SHELF ANGLES

Steel shapes used for lintels and shelf angles shall conform to ASTM A 36/A 36M. Lintels and shelf angles shall be provided as shown. These steel members shall be hot-dip galvanized in accordance with ASTM A 123/A 123M. Provide closed-cell neoprene sponge compressible filler below all horizontal relieving angles. Refer to Section 04200 MASONRY for material requirements>

2.15 CAULKING AND SEALANTS

Caulking and sealants shall be as specified in Section 07900 JOINT SEALING.

PART 3 EXECUTION

3.1 GENERAL INSTALLATION REQUIREMENTS

Wall sections, types of construction and dimensions shall be as shown. Metal door and window frames and other special framing shall be built and anchored into the wall system as indicated.

3.2 STEEL STUD WALL FRAMING

The top track of the stud wall system shall be slip jointed to accommodate vertical deflections of the supporting members as shown on the drawings. Both flanges of all steel studs shall be securely fastened with screws to the flanges of the top and bottom tracks as shown on the drawings. All details for affixing steel studs to runners and all other sheet steel framing members along with all details necessary for anchorage of the steel stud wall system to the building structural systems shall be as shown on the shop drawings. Horizontal bridging shall be provided as necessary. Studs shall be spaced as indicated on the drawings. Coordinate stud spacing with sheathing and anchor requirements. At wall openings for doors, windows and other similar features, the framing system shall provide for the installation and anchorage of the required subframes or finish frames. Steel frames shall be securely attached through built-in anchors to the nearest stud on each side of the opening with self-drilling screws. Double studs shall be provided at both jambs of all door openings. Door frames and other built-in items shall be grouted solid.

3.3 STEEL SHELF ANGLES

Shelf angles shall be adjusted as required to keep the masonry level and at the proper elevation. Shelf angles shall be galvanized. Shelf angles shall be provided in sections not longer than 3 m (10 feet) and installed with a 6 mm (1/4 inch) gap between sections. Shelf angles shall be mitered and welded at building corners with each angle not shorter than 1.2 m, (4 feet), unless limited by wall configuration. Fabrication and erection tolerances shall be in accordance with the AISC Code of Standard Practice, as indicated in AISC ASD Manual.

3.4 INSULATION

Insulation thickness shall be as shown on the approved drawings. Installation, except as otherwise specified or shown, shall be in accordance with the manufacturer's instructions which shall be approved by the Contracting Officer. Batt or blanket insulation shall be installed between wall framing members. Rigid insulating sheathing shall be installed over exterior sheathing in accordance with the manufacturer's instructions with proper connections through the insulation to prevent the insulation from carrying loads directly. Where electrical outlets, ducts, pipes, vents or other utility items occur, batt insulation shall be placed on the dry side of the item away from excessive humidity.

3.5 GYPSUM WALLBOARD

Gypsum wallboard shall be installed on the interior face of the cold-formed steel framing system. Installation shall be as specified in Section 09250 GYPSUM WALLBOARD except at vertical slip joints, the gypsum wallboard shall be connected to the vertical studs to prevent movement at the slip joint.

3.6 EXTERIOR SHEATHING

Sheathing shall be installed on the exterior face of the cold-formed steel framing system with self-drilling screws. Screws shall be located a minimum of 10 mm (3/8 inch) from the ends and edges of sheathing panels and shall be spaced not more than 200 mm (8 inches) on each supporting member except at vertical slip joints, the sheathing shall be connected to the vertical studs to prevent movement of the slip joint. Edges and ends of gypsum sheathing panels shall be butted snugly with vertical joints staggered to provide full and even support for the moisture barrier. Holes and gaps resulting from abandoned screw installations, from damage to panels, and from cutting and fitting of panels at junctures with doors, windows, foundation walls, floor slabs and other similar locations shall be filled with exterior rubber-base caulk.

3.7 MOISTURE PROTECTION

3.7.1 Moisture Barrier

The foil-faced insulating sheathing shall be installed per manufacturer's instructions on the outer face of the exterior gypsum sheathing with the joints running vertical. A moisture barrier shall be created by sealing each vertical joint with an aluminum foil tape recommended by manufacturer to provide a water-tight moisture barrier.

3.7.2 Vapor Retarder

A vapor retarder shall be installed between the steel studs and the gypsum wall board on the interior (warm) face of the wall construction. The vapor retarder shall be installed in accordance with the manufacturer's recommendations to form a complete retarder to vapor infiltration. The joints shall be lapped and sealed with tape.

3.8 VENEER ANCHORS

Veneer anchors shall be attached with screws through the sheathing and rigid insulation to the steel studs or other support members at the locations shown. When rigid insulation is used, the method of connecting the veneer anchor through the insulation shall be approved by the Contracting Officer. Veneer anchors shall be installed with the outermost

wires lying between 16 mm (5/8 inch) from each face of the masonry veneer. Synthetic rubber washers shall be used between the anchor connector plates and the moisture barrier. A clutch torque slip screw gun shall be used on screws attaching veneer anchors to cold-formed steel members. Veneer anchors with corrugated sheet metal or wire mesh members extending across the wall cavity shall not be used. There shall be one veneer anchor for each 0.2 square meters (two square feet) of wall and shall be attached to steel studs and other supports with a maximum spacing of 600 mm (24 inches) on center. For pintle-eye anchors the vertical distance between the pintle section horizontal wires and the eye section horizontal wires shall not exceed 13 mm (1/2 inch).

3.9 FLASHING

Continuous flashing shall be provided at the bottom of the wall cavity just above grade. Flashing shall also be provided above and below openings at lintels and sills, at shelf angles, and as indicated on the drawings. Flashing shall be as detailed and as specified in Section 07600 SHEET METALWORK, GENERAL. Flashing shall be lapped a minimum of 150 mm (6 inches) at joints and shall be sealed watertight with a mastic as recommended by the flashing manufacturer. Ends over doors, windows and openings shall be turned up and secured. Flashing shall be lapped under the insulating sheathing a minimum of 150 mm (6 inches) and securely attached to the gypsum sheathing. Flashing shall extend through the exterior face of the masonry veneer, and be evenly trimmed to leave a maximum of 6 mm,(1/4 inch) exposed, and then be turned down to form a drip.

3.10 MASONRY VENEER

Exterior masonry wythes shall be constructed to the thickness indicated on the drawings. A cavity consisting of a 50 mm (2 inch) minimum width air space (unless noted otherwise on Drawings) will be provided between the moisture barrier and the masonry veneer. Masonry veneer shall not be installed until the exterior sheathing, rigid insulation, moisture barrier, veneer anchors and flashing have been installed on the cold-formed steel framing system. Extreme care shall be taken to avoid damage to the moisture barrier and flashing during construction of the masonry veneer. Any portion of the moisture barrier and flashing that is damaged shall be repaired or replaced prior to completion of the veneer. Masonry shall be placed in running bond pattern. Vertical joints on alternating courses shall be aligned and kept vertically plumb. Solid masonry units shall be laid in a non-furrowed full bed of mortar, beveled and sloped toward the center of the wythe on which the mortar is placed. Units shall be shoved into place so that the vertical mortar joints are completely full and tight. Units that have been disturbed after the mortar has stiffened shall be removed, cleaned and relaid. Mortar which protrudes more than 13 mm (1/2 inch) into the cavity space shall be removed. Means shall be provided to ensure that the cavity space is kept clean of mortar droppings and other loose debris. Chases and raked-out joints shall be kept free from mortar and debris. Faces of units used in finished exposed areas shall be free from chipped edges, material texture or color defects or other imperfections distracting from the appearance of the finished work.

3.10.1 Surface Preparation

Surfaces on which masonry is to be laid shall be cleaned of laitance or other foreign material. No units having a film of water shall be laid.

3.10.2 Hot Weather Construction

Temperatures of masonry units and mortar shall not be greater than 50 degrees C (120 degrees F) when laid. Masonry erected when the ambient air temperature is more than 37 degrees C (99 degrees F) in the shade and when the relative humidity is less than 50 percent shall be given protection from the direct exposure to wind and sun for 48 hours after the installation.

3.10.3 Cold Weather Construction

Temperatures of masonry units and mortar shall not be less than 4 degrees C (40 degrees F) when laid. When the ambient air temperature is 0 degrees C (32 degrees F) or less, masonry veneer under construction shall be protected and maintained at a temperature greater than 0 degrees C (32 degrees F) for a period of 48 hours after installation. The proposed method of maintaining the temperature within the specified range shall be submitted for approval prior to implementation. No units shall be laid on a surface having a film of frost or water.

3.10.4 Tolerances

Masonry shall be laid plumb, level and true to line within the tolerances specified in TABLE 1. All masonry corners shall be square unless otherwise indicated on the drawings.

TABLE 1

Variation From Plumb	
In adjacent units	3 mm (1/8 inch)
In 3 m (10 feet)	6 mm (1/4 inch)
In 6 m (20 feet)	10 mm (3/8 inch)
In 12 m or more (40 feet)	13 mm (1/2 inch)

Variation From Level Or Grades	
In 3 m	3 mm
In 6 m	6 mm
In 12 m or more	13 mm

Variation From Linear Building Lines	
In 6 m	13 mm
In 12 m or more	19 mm

Variation From Cross Sectional Dimensions Of Walls	
Plus	13 mm
Minus	6 mm

3.10.5 Mixing of Mortar

Mortar shall be mixed in a mechanically operated mortar mixer for at least 3 minutes but not more than 5 minutes. Measurement of ingredients for

mortar shall be by volume. Measurement of sand shall be accomplished by the use of a container of known capacity or shovel count based on a container of known capacity. Water shall be mixed with the dry ingredients in sufficient amount to provide a workable mixture which will adhere to the vertical surfaces of the masonry units. Mortar that has stiffened because of loss of water through evaporation shall be retempered by adding water to restore the proper consistency and workability. Mortar that has reached its initial set or that has not been used within 2-1/2 hours shall be discarded.

3.10.6 Cutting and Fitting

Wherever possible, full units shall be used in lieu of cut units. Where cut units are required to accommodate the design, cutting shall be done by masonry mechanics using power masonry saws. Wet-cut units shall be dried to the same surface-dry appearances of uncut units before being placed in the work. Cut edges shall be clean, true and sharp. Openings to accommodate pipes, conduits, and other accessories shall be neatly formed so that framing or escutcheons required will completely conceal the cut edges. Insofar as practicable, all cutting and fitting shall be accomplished while masonry work is being erected.

3.10.7 Masonry Units

When being laid, masonry units shall have suction sufficient to hold the mortar and to absorb water from the mortar, but shall be damp enough to allow the mortar to remain in a plastic state to permit the unit to be leveled and plumbed immediately after being laid without destroying bond. Masonry units with frogging shall be laid with the frog side down and better or face side exposed to view. Masonry units that are cored, recessed or otherwise deformed may be used in sills or in other areas except where deformations will be exposed to view.

3.10.8 Mortar Joints

Mortar joint widths shall be uniform and such that the specified widths are maintained throughout. Joints shall be of thickness equal to the difference between the actual and nominal dimensions of the masonry units in either height or length but in no case shall the joints be less than 6 mm (1/4 inch) nor more than 13 mm (1/2 inch) wide. Joints shall be tooled slightly concave. Tooling shall be accomplished when mortar is thumbprint hard and in a manner that will compress and seal the mortar joint and produce joints of straight and true lines free of tool marks.

3.10.9 Joint Reinforcement

Unless otherwise shown, joint reinforcement shall be spaced at 400 mm (16 inches) on center vertically. Joint reinforcement shall not be placed in the same masonry course as veneer anchors unless the anchors are designed to accommodate the wire. Joint reinforcement shall be placed so that longitudinal wires are centered in the veneer wythe for solid units. Longitudinal wires shall be fully embedded in mortar for their entire length. Splices in joint reinforcement shall be lapped a minimum of 150 mm. (6 inches). Joint reinforcement must be discontinuous at all veneer joints. The minimum cover for joint reinforcement is 16 mm. (5/8 inches).

3.10.10 Veneer Joints

Brick expansion joints shall be provided at the locations shown on the

drawings. Details of joints shall be as indicated on the drawings. Joints shall be clean and free of mortar and shall contain only backer rod and sealant, installed in accordance with Section 07900 JOINT SEALING. Horizontal reinforcement shall not extend through the joints.

3.10.11 Weep Holes

Weep holes shall be provided at all flashing locations at intervals of 600 mm. (24 inches). Weep holes shall be placed in head joints just above the flashing. Weep holes shall be formed by installation of weep cords or head joint vents may be used. Weep holes shall be kept free of mortar and other obstructions.

3.10.12 Head Joint Vents

Head joint vents shall be provided near the top of the veneer wythe at the same spacing as the weep holes.

3.10.13 Discontinuous Work

When necessary to temporarily discontinue the work, masonry shall be stepped back for joining when work resumes. Toothing may be used only when specifically approved. Before resuming work, loose mortar shall be removed and the exposed joint shall be thoroughly cleaned. Top of walls subjected to rain or snow shall be covered with nonstaining waterproof covering or membrane when work is not in process. Covering shall extend a minimum of 600 mm (2 feet) down on each side of the wall and shall be held securely in place.

3.10.14 Cleaning

Mortar daubs or splashings shall be completely removed from finished exposed masonry surfaces before they harden or set up. Before completion of the work, defects in mortar joints shall be raked out as necessary, filled with mortar, and tooled to match the adjacent existing mortar in the joints. The proposed cleaning method shall be done on the sample wall panel and the sample panel shall be examined for discoloration or stain. If the sample panel is discolored or stained, the method of cleaning shall be changed to ensure that the masonry surfaces in the structure will not be adversely affected. Masonry surfaces shall not be cleaned, other than removing excess surface mortar, until mortar in joints has hardened. Cleaning shall be accomplished with the use of stiff bristle fiber brushes, wooden paddles, wooden scrapers, or other suitable nonmetallic tools. The exposed brick surfaces shall be saturated with water and cleaned with a proprietary brick cleaning agent recommended by the clay products manufacturer. The cleaning agent shall not adversely affect the brick masonry surfaces. Proprietary cleaning agents shall be used in conformance with the cleaning product manufacturer's printed recommendations. Efflorescence or other stains shall be removed in conformance with the recommendations of the masonry unit manufacturer. After construction and cleaning, masonry surfaces shall be left clean, free of mortar daubs, stain, and discolorations, including scum from cleaning operations, and will have tight mortar joints throughout. Metallic tools and brushes shall not be used for cleaning.

3.11 BUILDING EXPANSION JOINTS

Expansion joints shall be located where indicated and shall be of the size and details shown.

-- End of Section --

SECTION TABLE OF CONTENTS

DIVISION 05 - METALS

SECTION 05120

STRUCTURAL STEEL

09/97

PART 1 GENERAL

1.1 REFERENCES
1.2 GENERAL REQUIREMENTS
1.3 SUBMITTALS
1.4 STORAGE

PART 2 PRODUCTS

2.1 STRUCTURAL STEEL
2.1.1 Wide Flange Shapes
2.1.2 Other Shapes
2.2 STRUCTURAL TUBING
2.3 STEEL PIPE
2.4 Not Used
2.5 HIGH STRENGTH BOLTS AND NUTS
2.6 CARBON STEEL BOLTS AND NUTS
2.7 NUTS DIMENSIONAL STYLE
2.8 WASHERS
2.9 PAINT

PART 3 EXECUTION

3.1 FABRICATION
3.2 ERECTION
3.2.1 Structural Connections
3.2.2 Base Plates and Bearing Plates
3.2.3 Field Priming

-- End of Section Table of Contents --

SECTION 05120

STRUCTURAL STEEL
09/97

PART 1 GENERAL

1.1 REFERENCES

The publications listed below form a part of this specification to the extent referenced. The publications are referred to in the text by basic designation only.

AMERICAN INSTITUTE OF STEEL CONSTRUCTION (AISC)

AISC FCD	(1995a) Quality Certification Program Description
AISC ASD Mnl	(1989) Manual of Steel Construction Allowable Stress Design
AISC ASD/LRFD Vol II	(1992) Manual of Steel Construction Vol II: Connections
AISC Design Guide #10	(1989) Erection Bracing of Low-Rise Structural Steel Frames
AISC LRFD Vol II	(1995) Manual of Steel Construction Load & Resistance Factor Design, Vol II: Structural Members, Specifications & Codes
AISC Pub No. S303	(1992) Code of Standard Practice for Steel Buildings and Bridges

AMERICAN SOCIETY FOR TESTING AND MATERIALS (ASTM)

ASTM A 6/A 6M	(1997) General Requirements for Rolled Structural Steel Bars, Plates, Shapes, and Sheet Piling
ASTM A 53	(1997) Pipe, Steel, Black and Hot-Dipped, Zinc-Coated, Welded and Seamless
ASTM A 307	(1994) Carbon Steel Bolts and Studs, 60 000 PSI Tensile Strength
ASTM A 500	(1996) Cold-Formed Welded and Seamless Carbon Steel Structural Tubing in Rounds and Shapes
ASTM F 844	(1990) Washers, Steel, Plain (Flat), Unhardened for General Use
ASTM F 959	(1996) Compressible-Washer-Type Direct Tension Indicators for Use with Structural

Fasteners

AMERICAN SOCIETY OF MECHANICAL ENGINEERS (ASME)

ASME B18.21.1	(1994) Lock Washers (Inch Series)
ASME B46.1	(1995) Surface Texture (Surface Roughness, Waviness, and Lay)

AMERICAN WELDING SOCIETY (AWS)

AWS A2.4	(1993) Standard Symbols for Welding, Brazing and Nondestructive Examination
AWS D1.1	(1996) Structural Welding Code - Steel

STEEL STRUCTURES PAINTING COUNCIL (SSPC)

SSPC Paint 25	(1991) Red Iron Oxide, Zinc Oxide, Raw Linseed Oil and Alkyd Primer (without Lead and Chromate Pigments)

1.2 GENERAL REQUIREMENTS

Structural steel fabrication and erection shall be performed by an organization experienced in structural steel work of equivalent magnitude. The Contractor shall be responsible for correctness of detailing, fabrication, and for the correct fitting of structural members. Connections, for any part of the structure not shown on the contract drawings, shall be considered simple shear connections and shall be designed and detailed in accordance with pertinent provisions of AISC ASD Mnl and AISC LRFD Vol II. Substitution of sections or modification of connection details will not be accepted unless approved by the Contracting Officer. AISC ASD Mnl and AISC ASD/LRFD Vol II shall govern the work. Welding shall be in accordance with AWS D1.1. High-strength bolting shall be in accordance with AISC ASD Mnl.

1.3 SUBMITTALS

Government approval is required for submittals with a "G" designation; submittals not having a "G" designation are for information only or as otherwise designated. When used, a designation following the "G" designation identifies the office that will review the submittal for the Government. The following shall be submitted in accordance with Section 01330 SUBMITTAL PROCEDURES:

SD-02 Shop Drawings

Structural Steel System; G-AE.
Structural Connections; G-AE.

Shop and erection details including members (with their connections). Welds shall be indicated by standard welding symbols in accordance with AWS A2.4.

1.4 STORAGE

Material shall be stored out of contact with the ground in such manner and location as will minimize deterioration.

PART 2 PRODUCTS

2.1 STRUCTURAL STEEL

2.1.1 Wide Flange Shapes

Wide flange beams and columns shall conform to ASTM A 992 GR 50, Fy = 50ksi

2.1.2 Other Shapes

Rod bracing, channels, plates, and angles shall conform to ASTM A36, Fy = 36ksi."

2.2 STRUCTURAL TUBING

Structural tubing shall conform to ASTM A 500, Grade B.

2.3 STEEL PIPE

Steel pipe shall conform to ASTM A 53, Type S, Grade B.

2.4 Not Used

2.5 HIGH STRENGTH BOLTS AND NUTS

High strength bolts shall conform to ASTM A 325, Type 1 with carbon steel nuts conforming to ASTM A 563, Grade C

2.6 CARBON STEEL BOLTS AND NUTS

Carbon steel bolts shall conform to ASTM A 307, Grade A with carbon steel nuts conforming to ASTM A 563, Grade A.

2.7 NUTS DIMENSIONAL STYLE

Carbon steel nuts shall be Hex style when used with ASTM A 307 bolts or Heavy Hex style when used with ASTM A 325 or ASTM A 490 bolts.

2.8 WASHERS

Plain washers shall conform to ASTM F 844. Other types, when required, shall conform to ASME B18.21.1 OR ASTM F 436 OR ASTM F 959.

2.9 PAINT

Paint shall conform to SSPC Paint 25. All interior structural steel to receive fire proofing shall be free of primer and paint.

PART 3 EXECUTION

3.1 FABRICATION

Fabrication shall be in accordance with the applicable provisions of AISC ASD Mnl. Fabrication and assembly shall be done in the shop to the greatest extent possible. Compression joints depending on contact bearing shall have a surface roughness not in excess of 500 micro inches as determined by ASME B46.1, and ends shall be square within the tolerances for milled ends specified in ASTM A 6/A 6M. Structural steelwork, except

for surfaces of steel to be encased in concrete, surfaces to be field welded, surfaces to be fireproofed, and contact surfaces of friction-type high-strength bolted connections, shall be prepared for painting in accordance with endorsement "P" of AISC FCD and primed with the specified paint.

3.2 ERECTION

a. Erection of structural steel, except as indicated in item b. below, shall be in accordance with the applicable provisions of AISC ASD Mnl. Erection plan shall be reviewed, stamped and sealed by a structural engineer licensed by the state in which the project is located.

b. For low-rise structural steel buildings (60 feet tall or less and a maximum of 2 stories), the erection plan shall conform to AISC Pub No. S303 and the structure shall be erected in accordance with AISC Design Guide #10.

3.2.1 Structural Connections

Anchor bolts and other connections between the structural steel and foundations shall be provided and shall be properly located and built into connecting work. Field welded structural connections shall be completed before load is applied.

3.2.2 Base Plates and Bearing Plates

Column base plates for columns and bearing plates for beams, girders, and similar members shall be provided. Base plates and bearing plates shall be provided with full bearing after the supported members have been plumbed and properly positioned, but prior to placing superimposed loads. Separate setting plates under column base plates will not be permitted. The area under the plate shall be damp-packed solidly with bedding mortar, except where nonshrink grout is indicated on the drawings. Bedding mortar and grout shall be as specified in Section 03300 CAST-IN-PLACE STRUCTURAL CONCRETE.

3.2.3 Field Priming

After erection, the field bolt heads and nuts, field welds, and any abrasions in the shop coat shall be cleaned and primed with paint of the same quality as that used for the shop coat.

-- End of Section --

This page was intentionally left blank for duplex printing.

SECTION TABLE OF CONTENTS

DIVISION 05 - METALS

SECTION 05400

COLD-FORMED STEEL FRAMING

03/99

PART 1 GENERAL

1.1 REFERENCES
1.2 SUBMITTALS
1.3 DELIVERY, HANDLING AND STORAGE

PART 2 PRODUCTS

2.1 STEEL STUDS, TRACKS, BRACING, BRIDGING, AND ACCESSORIES
2.2 MARKINGS
2.3 CONNECTIONS

PART 3 EXECUTION

3.1 Delivery, Handling and Storage
3.2 CONNECTIONS
3.2.1 Welds
3.2.2 Screws
3.2.3 Anchors
3.3 INSTALLATION
3.3.1 General Requirements
3.3.2 Non-Load Bearing Walls (Curtain walls)
3.4 TOLERANCES

-- End of Section Table of Contents --

SECTION 05400
COLD-FORMED STEEL FRAMING
03/99

PART 1 GENERAL

1.1 REFERENCES

The publications listed below form a part of this specification to the extent referenced. The publications are referred to in the text by the basic designation only.

AMERICAN IRON AND STEEL INSTITUTE (AISI)

AISI Cold-Formed Spec	(1996) Specification & Commentary for the Design of Cold-Formed Steel Structural Members (Part V of the Cold-Formed Steel Design Manual)

AMERICAN SOCIETY FOR TESTING AND MATERIALS (ASTM)

ASTM A 123/A 123M	(1997a) Zinc (Hot-Dip Galvanized) Coatings on Iron and Steel Products
ASTM A 153/A 153M	(1998) Zinc Coating (Hot-Dip) on Iron and Steel Hardware
ASTM A 653/A 653M	(1997) Steel Sheet, Zinc Coated (Galvanized) or Zinc-Iron Alloy-Coated (Galvannealed) by the Hot-Dip Process
ASTM B 633	(1985; R 1994) Electrodeposited Coatings of Zinc on Iron and Steel
ASTM C 955	(1996a) Load-Bearing (Transverse and Axial) Steel Studs, Runners (Tracks), and Bracing or Bridging for Screw Application of Gypsum Panel Products and Metal Plaster Bases

AMERICAN WELDING SOCIETY (AWS)

AWS D1.3	(1989) Structural Welding Code - Sheet Steel

SOCIETY OF AUTOMOTIVE ENGINEERS (SAE)

SAE J 78	(1979) Steel Self Drilling Tapping Screws

1.2 SUBMITTALS

Government approval is required for submittals with a "G" designation; submittals not having a "G" designation are for information only. When used, a designation following the "G" designation identifies the office that will review the submittal for the Government. The following shall be

submitted in accordance with Section 01330 SUBMITTAL PROCEDURES:

SD-03 Product Data

Calculations; G-AE

Submit with shop drawings for all exterior wall and soffit systems. Indicate locations, size, spacings, gages, fastenings, and reinforcing. Design wind loads are indicated on Structural Drawings. (Note: Bidder is responsible for calculating loading requirements and satisfying standards established by Structural Drawings). Maximum deflection: L/360.

SD-02 Shop Drawings

Cold-Formed Steel Framing; G-AE

a. Cross sections, plans, and/or elevations showing component types and locations for each framing application; including shop coatings and material thicknesses for each framing component.

b. Connection details showing fastener type, quantity, location, and other information to assure proper installation.

c. Drawings depicting panel configuration, dimensions, components, locations, and construction sequence if the Contractor elects to install prefabricated/prefinished frames.

1.3 DELIVERY, HANDLING AND STORAGE

Materials shall be delivered and handled preventing bending or other damage, and avoiding contact with soil or other contaminating materials. Finish of the framing members shall be maintained at all times, using an approved high zinc dust content, galvanizing repair paint whenever necessary to prevent the formation of rust.

PART 2 PRODUCTS

2.1 STEEL STUDS, TRACKS, BRACING, BRIDGING, AND ACCESSORIES

Framing components shall comply with ASTM C 955 and the following:

a. Material shall be corrosion-resistant steel complying with ASTM A 653/A 653M, Grade (33) or higher, having a minimum yield of (33,000) psi and a G 60 minimum zinc coating.

b. Minimum uncoated steel thickness (design thickness times 0.95):

(1). Studs and Tracks: (0.0428 inch).

(2). Bracing and bridging: Thickness as required by calculations.

(3). Accessories: Standard thickness as provided by the manufacturer.

c. Minimum Stud and Track web depth: (3-5/8 inches).

d. Minimum Stud flange width: (1-3/8 inches).

e. Minimum Return Lip on Stud Flanges: (1/4 inches).

e. Deflection Track and Side Clips: Sized to accomodate 13 mm (1/2 inch) of vertical movement.

2.2 MARKINGS

Studs and track shall have product markings on the web of the section. The markings shall be repeated throughout the length of the member at a maximum spacing of 4 feet on center and shall be legible and easily read. The product marking shall include the following:

a. Manufacturer's identification.

b. Minimum delivered uncoated steel thickness.

c. Protective coating designator.

d. Minimum yield strength.

2.3 CONNECTIONS

Screws for steel-to-steel connections shall be self-drilling tapping in compliance with SAE J 78 of the type, size, and location as shown on the drawings. Electroplated screws shall have a Type II coating in accordance with ASTM B 633. Screws, bolts, and anchors shall be hot-dipped galvanized in accordance with ASTM A 123/A 123M or ASTM A 153/A 153M as appropriate. Screws bolts, and anchors shall be hot dipped galvanized in accordance with ASTM A 123/A 123Mor ASTM A 153/A 153M as appropriate.

PART 3 EXECUTION

3.1 Delivery, Handling and Storage

a. Materials shall be delivered and handled in a manner to avoid bending or other damage and to avoid contact with the soil or other contaminating materials.

b. Finish of the framing members shall be maintained at all times, using an approved high zinc dust content galvanizing repair paint whenever necessary to prevent the formation of rust.

3.2 CONNECTIONS

3.2.1 Welds

All welding shall be performed in accordance with AWS D1.3, as modified by AISI Cold-Formed Spec. All welders, welding operations, and welding procedures shall be qualified according to AWS D1.3. All welds shall be cleaned and coated with rust inhibitive galvanizing paint.

3.2.2 Screws

Screws shall be of the self-drilling self-tapping type. Screw penetration through joined materials shall not be less than three exposed threads. Minimum spacings and edge distances for screws shall be as specified in AISI Cold-Formed Spec. Screws covered by sheathing materials shall have low profile heads.

3.2.3 Anchors

Anchors shall be of the type, size, and location required by calculations.

3.3 INSTALLATION

3.3.1 General Requirements

a. Prefabricated frames shall be square, with components attached to prevent racking during fabrication, transportation, and lifting. Design and construction of frames shall include provisions for lifting.

b. Cutting of steel framing shall be by saw, shear, or plasma cutting equipment. Oxyacetylene torch cutting is not permitted.

c. Temporary bracing shall be provided and remain in place until work is permanently stabilized.

d. Abutting lengths of track shall be butt-welded, spliced, or each length securely anchored to a common structural element. Track shall be securely anchored to the supporting structure as shown on the drawings.

e. Splicing of framing components, other than track and tension members, is not permitted.

f. Wire tying of framing members is not permitted.

3.3.2 Non-Load Bearing Walls (Curtain walls)

a. Studs shall be spaced at (16 inches) on center maximum.

b. Studs shall be plumbed, aligned, and secured to the continuous runner tracks at each end, unless the stud end terminates at a deflection track.

c. Tracks shall be securely anchored to the supporting structure as shown on the drawings.

d. Bridging required shall be installed prior to the installation of facing materials.

e. Framed wall openings shall include headers and supporting components as required. Headers shall be installed in all openings that are larger than the stud spacing in a wall.

f. At wall openings for doors, windows and other similar features, the framing system shall provide for the installation and anchorage of the required subframes or finish frames. Steel frames shall be securely attached through built-in anchors to the nearest stud on each side of the opening with self-drilling screws. Double studs shall be provided at both jambs of all door openings.

g. Installation of sheathing, wallboards, or any other collateral material shall be performed in accordance with the product manufacturer's specifications.

h. Components (Deflection Track and/or Slide Clips) shall be provided at locations shown on the drawings to accommodate potential movements of Primary Frames. Construction shall accommodate a vertical movement of (1/2 inch).

3.4 TOLERANCES

Vertical alignment (plumbness) of studs shall be within 1/960th of the span. Horizontal alignment (levelness) of walls shall be within 1/960th of their respective lengths. Spacing of studs shall not be more than plus from the designed spacing providing the the cumulative error does not exceed the requirements of the finishing material.

-- End of Section --

SECTION TABLE OF CONTENTS

DIVISION 05 - METALS

SECTION 05500

MISCELLANEOUS METAL

07/97

PART 1 GENERAL

1.1 REFERENCES
1.2 SUBMITTALS
1.3 GENERAL REQUIREMENTS
1.4 DISSIMILAR MATERIALS
1.5 WORKMANSHIP
1.6 ANCHORAGE
1.7 ALUMINUM FINISHES
1.8 SHOP PAINTING

PART 2 PRODUCTS

2.1 ACCESS DOORS AND PANELS
2.1.1 Not Used
2.1.2 Fire Rated Access Panels
2.2 Not Used
2.3 Not Used
2.4 Not Used
2.5 Not Used
2.6 Not Used
2.7 BOLLARDS
2.8 Not Used
2.9 Expansion Covers
2.9.1 Floor Covers
2.9.2 Wall Covers
2.10 Not Used
2.11 FLOOR GRATINGS AND FRAMES
2.12 Not Used
2.13 Not Used
2.14 HANDRAILS
2.14.1 Steel Handrails, Including Carbon Steel Inserts
2.15 Not Used
2.16 Not Used
2.17 Not Used
2.18 Not Used
2.19 MISCELLANEOUS
2.20 Aluminum Channel at Exterior Wall
2.21 Not Used
2.22 RECESSED FLOOR MATS
2.23 Not Used
2.24 Not Used
2.25 Not Used
2.26 Not Used
2.27 STEEL STAIRS

PART 3 EXECUTION

3.1 GENERAL INSTALLATION REQUIREMENTS
3.2 REMOVABLE ACCESS PANELS
3.3 Not Used
3.4 Not Used
3.5 INSTALLATION OF BOLLARDS
3.6 Not Used
3.7 ATTACHMENT OF GUARDRAILS
3.7.1 Installation of Steel Handrails
3.8 Not Used
3.9 Not Used
3.10 EXPANSION JOINT COVERS
3.11 RECESSED FLOOR MATS

-- End of Section Table of Contents --

SECTION 05500

MISCELLANEOUS METAL
07/97

PART 1 GENERAL

1.1 REFERENCES

The publications listed below form a part of this specification to the extent referenced. The publications are referred to in the text by basic designation only.

ALUMINUM ASSOCIATION (AA)

AA DAF-45	(1980; R 1993) Designation System for Aluminum Finishes

AMERICAN SOCIETY FOR TESTING AND MATERIALS (ASTM)

ASTM A 36	(1996) Carbon Structural Steel
ASTM A 53	(1996) Pipe, Steel, Black and Hot-Dipped, Zinc-Coated, Welded and Seamless
ASTM A 123	(1989a) Zinc (Hot-Dip Galvanized) Coatings on Iron and Steel Products
ASTM A 653	(1996) Steel Sheet, Zinc-Coated (Galvanized) or Zinc-Iron Alloy-Coated (Galvannealed) by the Hot-Dip Process
ASTM A 924	(1996a) Steel Sheet, Metallic-Coated by the Hot-Dip Process

AMERICAN WELDING SOCIETY (AWS)

AWS D1.1	(1994) Structural Welding Code - Steel

COMMERCIAL ITEM DESCRIPTIONS (CID)

CID A-A-344	(Rev B) Lacquer, Clear Gloss, Exterior, Interior

1.2 SUBMITTALS

Government approval is required for submittals with a "G" designation; submittals not having a "G" designation are for information only. When used, a designation following the "G" designation identifies the office that will review the submittal for the Government. The following shall be submitted in accordance with Section 01330 SUBMITTAL PROCEDURES:

SD-02 Shop Drawings

Miscellaneous Metal Items; G-AE

Detail drawings indicating material thickness, type, grade, and class; dimensions; and construction details. Drawings shall include catalog cuts, erection details, manufacturer's descriptive data and installation instructions, and templates.

1.3 GENERAL REQUIREMENTS

The Contractor shall verify all measurements and shall take all field measurements necessary before fabrication. Welding to or on structural steel shall be in accordance with AWS D1.1. Items specified to be galvanized, when practicable and not indicated otherwise, shall be hot-dip galvanized after fabrication. Galvanizing shall be in accordance with ASTM A 123, ASTM A 653, or ASTM A 924, as applicable. Exposed fastenings shall be compatible materials, shall generally match in color and finish, and shall harmonize with the material to which fastenings are applied. Materials and parts necessary to complete each item, even though such work is not definitely shown or specified, shall be included. Poor matching of holes for fasteners shall be cause for rejection. Fastenings shall be concealed where practicable. Thickness of metal and details of assembly and supports shall provide strength and stiffness. Joints exposed to the weather shall be formed to exclude water.

1.4 DISSIMILAR MATERIALS

Where dissimilar metals are in contact, or where aluminum is in contact with concrete, mortar, masonry, wet or pressure-treated wood, or absorptive materials subject to wetting, the surfaces shall be protected with a coat of bituminous paint or asphalt varnish.

1.5 WORKMANSHIP

Miscellaneous metalwork shall be well formed to shape and size, with sharp lines and angles and true curves. Drilling and punching shall produce clean true lines and surfaces. Welding shall be continuous along the entire area of contact except where tack welding is permitted. Exposed connections of work in place shall not be tack welded. Exposed welds shall be ground smooth. Exposed surfaces of work in place shall have a smooth finish, and unless otherwise approved, exposed riveting shall be flush. Where tight fits are required, joints shall be milled. Corner joints shall be coped or mitered, well formed, and in true alignment. Work shall be accurately set to established lines and elevations and securely fastened in place. Installation shall be in accordance with manufacturer's installation instructions and approved drawings, cuts, and details.

1.6 ANCHORAGE

Anchorage shall be provided where necessary for fastening miscellaneous metal items securely in place. Anchorage not otherwise specified or indicated shall include slotted inserts made to engage with the anchors, expansion shields, and power-driven fasteners when approved for concrete; toggle bolts and through bolts for masonry; machine and carriage bolts for steel; and lag bolts and screws for wood.

1.7 ALUMINUM FINISHES

Unless otherwise specified, aluminum items shall have standard mill finish. The thickness of the coating shall be not less than that specified for protective and decorative type finishes for items used in interior

locations or architectural Class I type finish for items used in exterior locations in AA DAF-45. Items to be anodized shall receive a polished satin finish. Aluminum surfaces to be in contact with plaster or concrete during construction shall be protected with a field coat conforming to CID A-A-344.

1.8 SHOP PAINTING

Surfaces of ferrous metal except galvanized surfaces, shall be cleaned and shop coated with the manufacturer's standard protective coating unless otherwise specified. Surfaces of items to be embedded in concrete shall not be painted. Items to be finish painted shall be prepared according to manufacturer's recommendations or as specified.

PART 2 PRODUCTS

2.1 ACCESS DOORS AND PANELS

Doors and panels shall be flush type unless otherwise indicated. Frames for access doors shall be fabricated of not lighter than (16 gauge) steel with welded joints and finished with anchorage for securing into construction. Access doors shall be a minimum of (14 by 20 inches) except as otherwise noted on drawings, and of not lighter than steel, with stiffened edges, complete with attachments. Access doors shall be hinged to frame and provided with a flush face, screw driver operated latch. Exposed metal surfaces shall have a shop applied prime coat.

2.1.1 Not Used

2.1.2 Fire Rated Access Panels

Access doors and panels located in fire-rated walls shall be of fire-rated to match the surrounding wall construction.

2.2 Not Used

2.3 Not Used

2.4 Not Used

2.5 Not Used

2.6 Not Used

2.7 BOLLARDS

Pipe guards shall be heavy duty steel pipe conforming to ASTM A 53, Type E or S, weight STD, black finish. Refer to Drawings for size and location.

2.8 Not Used

2.9 Expansion Covers

Expansion joint covers shall be constructed of 3 mm (1/8") extruded aluminum with anodized satin finish for walls and with standard mill finish for floor covers and exterior covers. Plates, backup angles, expansion filler strip and anchors shall be provided. Expansion joint system shall provide a one hour fire rating and 38 mm (1-1/2 inch) movement.

2.9.1 Floor Covers

Floor expansion joint covers shall set flush with adjacent surfaces and shall be able to receive 9 mm (3/8 ") floor finish material either side of the expansion joint.

2.9.2 Wall Covers

Wall expansion joint covers shall be 10 mm (3/8") deep, of a one piece design (similar to MM Systems style "EX-K2" with 8700 cover.)

2.10 Not Used

2.11 FLOOR GRATINGS AND FRAMES

Carbon steel grating shall be provided in accordance drawings. Edges shall be banded with bars less in height than bearing bars for grating sizes above Banding bars shall be flush with the top of bearing grating. Frames shall be of welded steel construction finished to match the grating. Unless noted otherwise, floor gratings and frames shall be galvanized after fabrication. Provide grating at balconies and service court area well, with bars 38 mm (1-1/2 inch) deep by 5 (3/16") in a single panel. Bars shall be oriented as indicated on Drawings.

2.12 Not Used

2.13 Not Used

2.14 HANDRAILS

Handrails shall be designed to resist a concentrated load of in any direction at any point of the top of the rail or 292 Newtons (20 pounds per foot)applied horizontally to top of the rail, whichever is more severe.

2.14.1 Steel Handrails, Including Carbon Steel Inserts

Steel handrails, including inserts in concrete, shall be as indicated on the Drawings. Railings shall be shop painted. Pipe collars shall be steel.

a. Joint posts, rail, and corners shall be fabricated by mitered and welded joints by fitting post to top rail and intermediate rail to post, mitering corners, groove welding joints, and grinding smooth. Railing splices shall be butted and reinforced by a tight fitting interior sleeve not less than)6 inches) long.

b. Removable sections, toe-boards, and brackets shall be provided as indicated.

2.15 Not Used

2.16 Not Used

2.17 Not Used

2.18 Not Used

2.19 MISCELLANEOUS

Miscellaneous steel or aluminum plates and shapes for items that do not form a part of the structural steel framework, such as lintels, sill angles, aluminum channels, miscellaneous mountings, and frames, shall be provided to complete the work.

2.20 Aluminum Channel at Exterior Wall

6061-T6 aluminum channels weighing 6.138 lbs/lf, shall be provided for use as part of the exterior wall system. Channels shall be 254 mm (10 inches) high with 89 mm (3 1/2 inch)legs, finished with a clear anodized finish. Prior to fabrication, supplier to field verify the aluminum channels used on the previous phase of work to ensure the channels provided with this phase of work match the existing work.

2.21 Not Used

2.22 RECESSED FLOOR MATS

Recessed floor mats shall be of aluminum construction with level base frame and drain pan, and heavy duty carpet tread inserts. Treads and tread rails shall be securely locked into tread rails, yet remain easily accessible for in field replacement in the event of excessive wear or damage. Tread rails to be fabricated from 6063-T52 aluminum alloy and shall be continuously hinged at each tread connection to permit cleaning. Tread rail finish to be standard mill. Framing members shall be fabricated of 6063-T52 aluminum alloy, neatly coped at corners and assembled with stainless steel screws to provide for rigid frame connections. Surfaces in contact with masonry shall receive one shop coat of zinc chromate primer. All other aluminum surfaces shall have a mill finish. All grid and framing sections when installed, shall be designed to support a minimum 300 lbs. per wheel loading. Mats shall be recessed for for use in vestibule. Construction details of recessed areas are shown on the drawings.

2.23 Not Used

2.24 Not Used

2.25 Not Used

2.26 Not Used

2.27 STEEL STAIRS

Steel stairs shall be complete with structural or formed channel stringers, metal pan cement-filled treads, landings, columns, handrails, and necessary bolts and other fastenings as indicated. Structural steel shall conform to ASTM A 36. Stairs and accessories shall be primed. Risers on stairs with metal pan treads shall be deformed to form a sanitary cove to retain the tread concrete. Provide wire mesh panels at guardrails as indicated on drawings.

PART 3 EXECUTION

3.1 GENERAL INSTALLATION REQUIREMENTS

All items shall be installed at the locations shown and according to the manufacturer's recommendations. Items listed below require additional procedures as specified.

3.2 REMOVABLE ACCESS PANELS

A removable access panel not less than (12 by 12 inches) shall be installed directly below each valve, flow indicator, damper, or air splitter that is located above the ceiling, other than an acoustical ceiling, and that would otherwise not be accessible.

3.3 Not Used

3.4 Not Used

3.5 INSTALLATION OF BOLLARDS

Bollard shall be set vertically in concrete piers. Piers shall be constructed of, and the hollow cores of the pipe filled with, concrete specified in SECTION 03300 CAST-IN-PLACE STRUCTURAL CONCRETE.

3.6 Not Used

3.7 ATTACHMENT OF GUARDRAILS

Toeboards and brackets shall be installed where indicated. Splices, where required, shall be made at expansion joints. Removable sections shall be installed as indicated.

3.7.1 Installation of Steel Handrails

Installation shall be as indicated on drawings.

3.8 Not Used

3.9 Not Used

3.10 EXPANSION JOINT COVERS

Coordinate installation requirements with other trades. Final fitting and cutting of recesses for floor covers into existing construction shall also be a part of this Section.

3.11 RECESSED FLOOR MATS

Contractor shall verify field measurements prior to releasing materials for fabrication by the manufacturer. A mat frame shall be used to ensure recess accuracy in size, shape and depth. Drain pit shall be formed by blocking out concrete when frames are installed. Pit shall be dampproofed after concrete has set. Frames shall be assembled onsite and installed so that upper edge will be level with finished floor surface. A cement base shall be screeded inside the mat recess frame area using the edge provided by the frame as a guide. The frame shall be anchored into the cement with anchor pins a minimum of 610 mm (24 inches) on center.

-- End of Section --

SECTION TABLE OF CONTENTS

DIVISION 06 - WOODS & PLASTICS

SECTION 06100

ROUGH CARPENTRY

09/96

PART 1 GENERAL

1.1 REFERENCES
1.2 SUBMITTALS
1.3 DELIVERY AND STORAGE

PART 2 PRODUCTS

2.1 LUMBER AND SHEATHING
2.1.1 Grading and Marking
2.1.1.1 Lumber Products
2.1.1.2 Plywood and Other Sheathing Products
2.1.2 Sizes
2.1.3 Treatment
2.1.3.1 Lumber and Timbers
2.1.3.2 Plywood
2.1.4 Moisture Content
2.1.5 Fire-Retardant Treatment
2.1.6 Sheathing
2.1.6.1 Not Used
2.1.6.2 Not Used
2.1.6.3 Plywood
2.1.6.4
2.1.6.5 Wood
2.1.7 Miscellaneous Wood Members
2.1.7.1 Nonstress Graded Members
2.1.7.2
2.1.7.3 Not Used
2.1.7.4 Blocking
2.1.7.5 Rough Bucks and Frames
2.2 ACCESSORIES AND NAILS
2.2.1 Anchor Bolts
2.2.2 Bolts: Lag, Toggle, and Miscellaneous Bolts and Screws
2.2.3 Clip Angles
2.2.4 Expansion Shields
2.2.5
2.2.6
2.2.7 Nails and Staples

PART 3 EXECUTION

3.1 INSTALLATION OF FRAMING
3.1.1 General
3.2 INSTALLATION OF SHEATHING
3.2.1 Not Used
3.2.2 Not Used

3.2.3 Plywood Panels
3.3 INSTALLATION OF MISCELLANEOUS WOOD MEMBERS
3.3.1 Not Used
3.3.2 Not Used
3.3.3 Blocking
3.3.4 Nailers and Nailing Strips
3.3.5 Not Used
3.3.6 Furring Strips

-- End of Section Table of Contents --

SECTION 06100

ROUGH CARPENTRY
09/96

PART 1 GENERAL

1.1 REFERENCES

The publications listed below form a part of this specification to the extent referenced. The publications are referred to in the text by basic designation only.

AMERICAN SOCIETY FOR TESTING AND MATERIALS (ASTM)

ASTM A 307	(1994) Carbon Steel Bolts and Studs, 60 000 PSI Tensile Strength
ASTM D 2898	(1994) Accelerated Weathering of Fire-Retardant-Treated Wood for Fire Testing
ASTM F 547	(1977; R 1990) Definitions of Terms Relating to Nails for Use with Wood and Wood-Base Materials

AMERICAN WOOD-PRESERVERS' ASSOCIATION (AWPA)

AWPA C2	(1995) Lumber, Timber, Bridge Ties and Mine Ties - Preservative Treatment by Pressure Processes
AWPA C9	(1995) Plywood - Preservative Treatment by Pressure Processes
AWPA C20	(1993) Structural Lumber Fire-Retardant Pressure Treatment
AWPA C27	(1993) Plywood - Fire-Retardant Pressure Treatment
AWPA M4	(1995) Standard for the Care of Preservative-Treated Wood Products
AWPA P5	(1996) Standards for Waterborne Preservatives

CALIFORNIA REDWOOD ASSOCIATION (CRA)

CRA-01	(1997) Standard Specifications for Grades of California Redwood Lumber

DEPARTMENT OF COMMERCE (DOC)

DOC PS 1	(1996) Voluntary Product Standard - Construction and Industrial Plywood
DOC PS 2	(1992) Performance Standards for Wood-Based Structural-Use Panels

FACTORY MUTUAL ENGINEERING AND RESEARCH (FM)

FM LPD 1-49	(1995) Loss Prevention Data Sheet - Perimeter Flashing

NATIONAL HARDWOOD LUMBER ASSOCIATION (NHLA)

NHLA-01	(1994) Rules for the Measurement & Inspection of Hardwood & Cypress

NORTHEASTERN LUMBER MANUFACTURERS ASSOCIATION (NELMA)

NELMA-01	(1997) Standard Grading Rules for Northeastern Lumber

SOUTHERN CYPRESS MANUFACTURERS ASSOCIATION (SCMA)

SCMA-01	(1986; Supple No. 1, Aug 1993) Standard Specifications for Grades of Southern Cypress

SOUTHERN PINE INSPECTION BUREAU (SPIB)

SPIB 1003	(1994; Supple 8 thru 11) Standard Grading Rules for Southern Pine Lumber

WEST COAST LUMBER INSPECTION BUREAU (WCLIB)

WCLIB Std 17	(1996; Supples VII(A-E), VIII(A-C)) Grading Rules for West Coast Lumber

WESTERN WOOD PRODUCTS ASSOCIATION (WWPA)

WWPA-01	(1995; Supple Nos. 1 thru 5) Western Lumber Grading Rules 95

1.2 SUBMITTALS

Government approval is required for submittals with a "G" designation; submittals not having a "G" designation are for information only. When used, a designation following the "G" designation identifies the office that will review the submittal for the Government. The following shall be submitted in accordance with Section 01330 SUBMITTAL PROCEDURES:

SD-07 Certificates

Grading and Marking;

Manufacturer's certificates (approved by an American Lumber Standards approved agency) attesting that lumber and material not normally grade marked meet the specified requirements. Certificate of Inspection for grade marked material by an American Lumber Standards Committee (ALSC) recognized inspection agency

prior to shipment.

1.3 DELIVERY AND STORAGE

Materials shall be delivered to the site in undamaged condition, stored off ground in fully covered, well ventilated areas, and protected from extreme changes in temperature and humidity.

PART 2 PRODUCTS

2.1 LUMBER AND SHEATHING

2.1.1 Grading and Marking

2.1.1.1 Lumber Products

Solid sawn and finger-jointed lumber shall bear an authorized gradestamp or grademark recognized by ALSC, or an ALSC recognized certification stamp, mark, or hammerbrand. Surfaces that are to be exposed to view shall not bear grademarks, stamps, or any type of identifying mark. Hammer marking will be permitted on timbers when all surfaces will be exposed to view.

2.1.1.2 Plywood and Other Sheathing Products

Materials shall bear the grademark or other identifying marks indicating grades of material and rules or standards under which produced, including requirements for qualifications and authority of the inspection organization. Except for plywood and structural-use panels, bundle marking will be permitted in lieu of marking each individual piece. Surfaces that are to be exposed to view shall not bear grademarks or other types of identifying marks.

2.1.2 Sizes

Lumber and material sizes shall conform to requirements of the rules or standards under which produced. Unless otherwise specified, lumber shall be surfaced on four sides. Unless otherwise specified, sizes indicated are nominal sizes, and actual sizes shall be within manufacturing tolerances allowed by the standard under which the product is produced.

2.1.3 Treatment

Exposed areas of treated wood that are cut or drilled after treatment shall receive a field treatment in accordance with AWPA M4. Items of all-heart material of cedar, cypress, or redwood will not require preservative treatment, except when in direct contact with soil. Except as specified for all-heart material of the previously mentioned species, the following items shall be treated:

a. Wood members in contact with or within (18 inches) of soil.

b. Wood members in contact with water.

c. Wood members exposed to the weather including those used in roofing systems or as nailing strips or nailers over fiberboard.

d. Wood members set into concrete regardless of location.

e. Wood members in contact with concrete that is in contact with soil

or water or that is exposed to weather.

2.1.3.1 Lumber and Timbers

Lumber and timbers shall be treated in accordance with AWPA C2 with waterborne preservatives listed in AWPA P5 to a retention level as follows:

a. intended for above ground use.

b. intended for ground contact and fresh water use.

2.1.3.2 Plywood

Plywood shall be treated in accordance with AWPA C9 with waterborne preservatives listed in AWPA P5 to a retention level as follows:

a. intended for above ground use.

b. intended for ground contact and fresh water use.

2.1.4 Moisture Content

At the time lumber and other materials are delivered and when installed in the work their moisture content shall be as follows:

a. Treated and Untreated Lumber : (4 inches) or less, nominal thickness, 19 percent maximum. (5 inches) or more, nominal thickness, 23 percent maximum in a (3 inch) perimeter of the timber cross-section.

b. Not Used

c. Materials Other Than Lumber: In accordance with standard under which product is produced.

2.1.5 Fire-Retardant Treatment

Fire-retardant treated wood shall be pressure treated in accordance with AWPA C20 for lumber and AWPA C27 for plywood. Material use shall be defined in AWPA C20 and AWPA C27 for Interior Type B and Exterior Type. Treatment and performance inspection shall be by an independent and qualified testing agency that establishes performance ratings. Each piece or bundle of treated material shall bear identification of the testing agency to indicate performance in accordance with such rating. Treated materials to be exposed to rain wetting shall be subjected to an accelerated weathering technique in accordance with ASTM D 2898 prior to being tested for compliance with AWPA C20 or AWPA C27. Items to be treated include: Blocking in fire-rated walls..

2.1.6 Sheathing

Miscellaneous sheathing shall beplywoodfor roof sheathing.

2.1.6.1 Not Used

2.1.6.2 Not Used

2.1.6.3 Plywood

Plywood shall conform to DOC PS 1, APA PRP-108 or DOC PS 2, Grade C-D with

exterior glue. Sheathing for roof and walls without corner bracing of framing shall have a span rating of 16/0 or greater for supports (16 inches) on center and a span rating of 24/0 or greater for supports (24 inches) on center.

2.1.6.4 Not Used

2.1.6.5 Wood

Species and grade shall be in accordance with TABLE I at the end of this section. Roof sheathing shall be (3/4 inch) thick for supports (16 inches) on center.

2.1.7 Miscellaneous Wood Members

2.1.7.1 Nonstress Graded Members

Members shall include bridging, corner bracing, furring, grounds, and nailing strips. Members shall be in accordance with TABLE I for the species used. Sizes shall be as follows unless otherwise shown:

2.1.7.2 Not Used

2.1.7.3 Not Used

2.1.7.4 Blocking

Blocking shall be standard or number 2 grade.

2.1.7.5 Rough Bucks and Frames

Rough bucks and frames shall be straight standard or number 2 grade.

2.2 ACCESSORIES AND NAILS

Markings shall identify both the strength grade and the manufacturer. Accessories and nails shall conform to the following:

2.2.1 Anchor Bolts

ASTM A 307, size as indicated, complete with nuts and washers.

2.2.2 Bolts: Lag, Toggle, and Miscellaneous Bolts and Screws

Type, size, and finish best suited for intended use. Finish options include zinc compounds, cadmium, and aluminum paint impregnated finishes.

2.2.3 Clip Angles

Steel, , size best suited for intended use; or zinc-coated steel or iron commercial clips designed for connecting wood members.

2.2.4 Expansion Shields

Type and size best suited for intended use.

2.2.5 Not Used

2.2.6 Not Used

2.2.7 Nails and Staples

ASTM F 547, size and type best suited for purpose; staples shall be as recommended by the manufacturer of the materials to be joined. For sheathing length of nails shall be sufficient to extend (1 inch) into supports. In general, 8-penny or larger nails shall be used for nailing through (1 inch) thick lumber and for toe nailing (2 inch) thick lumber; 16-penny or larger nails shall be used for nailing through (2 inch) thick lumber. Nails used with treated lumber and sheathing shall be galvanized. Nailing shall be in accordance with the recommended nailing schedule contained in AF&PA T11. Where detailed nailing requirements are not specified, nail size and spacing shall be sufficient to develop an adequate strength for the connection. The connection's strength shall be verified against the nail capacity tables in AF&PA T01. Reasonable judgement backed by experience shall ensure that the designed connection will not cause the wood to split. If a load situation exceeds a reasonable limit for nails, a specialized connector shall be used.

PART 3 EXECUTION

3.1 INSTALLATION OF FRAMING

3.1.1 General

General framing shall be in accordance with AF&PA T11.Members shall be closely fitted, accurately set to required lines and levels, and rigidly secured in place. Members shall be cut, notched, or bored in accordance with applicable requirements of AF&PA T01 for the passage of pipes, wires, or conduits.

3.2 INSTALLATION OF SHEATHING

3.2.1 Not Used

3.2.2 Not Used

3.2.3 Plywood Panels

Sheathing shall be applied with edges (1/8 inch) apart at side and end joints, and nailed at supported edges at (6 inches) on center and at intermediate supports (12 inches) on center unless otherwise shown. Nailing of edges shall be (3/8 inch) from the edges. Wall sheathing shall extend over top and bottom plates, and if applied horizontally the vertical joints shall be made over supports and staggered.

3.3 INSTALLATION OF MISCELLANEOUS WOOD MEMBERS

3.3.1 Not Used

3.3.2 Not Used

3.3.3 Blocking

Blocking shall be provided as necessary for application of sheathing, wallboard, and other materials or building items, and to provide firestopping.

3.3.4 Nailers and Nailing Strips

Nailers and nailing strips shall be provided as necessary for the attachment of finish materials. Stacked nailers shall be assembled with spikes or nails spaced not more than (18 inches) on center and staggered. Beginning and ending nails shall not be more than (6 inches) for nailer end. Ends of stacked nailers shall be offset approximately (12 inches) in long runs and alternated at corners. Anchors shall extend through the entire thickness of the nailer. Strips shall be run in lengths as long as practicable, butt jointed, and rigidly secured in place. Nailers and nailer installation for Factory Mutual wind uplift rated roof systems specified in other Sections of these specifications shall conform to the recommendations contained in FM LPD 1-49.

3.3.5 Not Used

3.3.6 Furring Strips

Furring strips shall be provided at the locations shown. Furring strips shall be installed at (16 inches) on center unless otherwise shown, run in

lengths as long as practicable, butt jointed and rigidly secured in place.

TABLE I. SPECIES AND GRADE

Subflooring, Roof Sheathing, Wall Sheathing, Furring

Grading Rules	Species	Const Standard	No. 2 Comm	No. 2 Board Comm	No. 3 Comm
NHLA-01					
	Cypress			X	
NELMA-01					
	Northern White Cedar				X
	Eastern White Pine	X			
	Northern Pine	X			
	Balsam Fir				X
	Eastern Hemlock-Tamarack				X
CRA-01					
	Redwood		X		
SCMA-01					
	Cypress			X	
SPIB 1003					
	Southern Pine		X		
WCLIB Std 17					
	Douglas Fir-Larch	X			
	Hem-Fir	X			
	Sitka Spruce	X			
	Mountain Hemlock	X			
	Western Cedar	X			
WWPA-01					
	Douglas Fir-Larch	X			
	Hem-Fir	X			
	Idaho White Pine	X			
	Lodgepole Pine			X	
	Ponderosa Pine			X	
	Sugar Pine			X	
	Englemann Spruce			X	
	Douglas Fir South			X	
	Mountain Hemlock			X	
	Subalpine Fir			X	
	Western Cedar			X	

TABLE II. SPECIES AND GRADE

Wood Bumpers

Grading Rules	Species	No. 1	No. 2
NHLA-01			
	Red Oak	X	
NELMA-01			
	Northern Pine		X
	Eastern Hemlock-Tamarack		X
SPIB 1003			
	Southern Pine	X	
WCLIB Std 17			
	Douglas Fir-Larch		X
	Hem-Fir		X
WWPA-01			
	Douglas Fir-Larch		X
	Hem-Fir		X
	Douglas Fir-South		X

-- End of Section --

SECTION TABLE OF CONTENTS

DIVISION 06 - WOODS & PLASTICS

SECTION 06200

FINISH CARPENTRY

09/96

PART 1 GENERAL

1.1 REFERENCES
1.2 SUBMITTALS
1.3 DELIVERY AND STORAGE

PART 2 PRODUCTS

2.1 WOOD ITEMS AND TRIM
2.1.1 Grading and Marking
2.1.2 Sizes and Patterns
2.1.3 Moisture Content
2.1.4 Wood Species
2.1.5 Not Used
2.1.6 Sheet Materials
2.1.6.1 Hardwood Plywood
2.1.6.2 Wood Particleboard / Fiberboard (MDF)
2.1.6.3 Hardboard
2.1.7 Veneer Materials
2.1.7.1 Wood Veneer
2.1.7.2 Low Pressure Laminate (Melamine)
2.1.7.3 Plastic Laminate
2.1.8 Hardware
2.1.8.1 Hinges
2.1.8.2 Locks
2.1.8.3 Shelf Standards
2.1.8.4 Not Used
2.1.8.5 Pulls for Doors and Drawers
2.1.8.6 Grommets
2.1.8.7 Vanity Supports
2.1.8.8 Guest Room Closet Rods and Supports
2.1.9 Wood Filler
2.1.10 Not Used
2.1.11 Finishes
2.1.12 Woodwork Items (Refer to drawings for size, quantity and details)
2.1.12.1 Guest Room Mini bars
2.1.12.2 Guest Room Bathroom Vanities
2.1.12.3 Guestroom Closet Shelving
2.1.12.4 Window Stools
2.2 NAILS AND ANCHORS
2.3 Cultured Marble

PART 3 EXECUTION

3.1 GENERAL

3.2 WOOD TRIM
3.3 CULTURED MARBLE

-- End of Section Table of Contents --

SECTION 06200

FINISH CARPENTRY
09/96

PART 1 GENERAL

1.1 REFERENCES

The publications listed below form a part of this specification to the extent referenced. The publications are referred to in the text by basic designation only.

ARCHITECTURAL WOODWORK INSTITUTE (AWI)

AWI-02	(1994) Architectural Woodwork Quality Standard, Guide Specifications and Quality Certification Programs

1.2 SUBMITTALS

Government approval is required for submittals with a "GA" designation; submittals having an "FIO" designation are for information only. The following shall be submitted in accordance with Section 01330 SUBMITTAL PROCEDURES:

SD-03 Product Data

Specialty Items; G-AE

Manufacturer's printed data, catalog cuts, and installation instructions for all specialty items not manufactured by woodwork fabricator, including hardware.

Wood Items and Trim; G-AE

Manufacturer's printed data indicating the usage of engineered or recycled wood products, and environmentally safe preservatives.

SD-04 Drawings

Finish Carpentry; G-AE.

Drawings showing fabricated items and special mill and woodwork items. Drawings shall indicate materials and details of construction, methods of fastening, hardware, schedule of finishes, erection, and installation.

SD-14 Samples

Wood Trim; G-AE.
Plastic Laminate; G-AE

Samples shall be of sufficient size to show patterns, color

ranges, and types, as applicable, of all materials proposed to be used.

1.3 DELIVERY AND STORAGE

Deliver woodwork under cover. Protect from sub-zero temperatures during delivery. Do not deliver until drywall joint treatment and similar moisture producing materials have dried out for at least 15 days, or until relative humidity is less than 60%, and in cold weather, until heat has been provided for at least 10 days prior to delivery. Store indoors, in ventilated areas with constant minimum temperature of 15 degrees C (60 degrees F) and monitor relative humidity at the site between 25% and 55% before, during and after installation.

PART 2 PRODUCTS

2.1 WOOD ITEMS AND TRIM

The Contractor shall furnish products which optimize design by reducing the amount of wood used (engineered wood), or recycled wood products, and preservatives without arsenic or chromium when the products and methods are competitive in price or directed by the Contracting Officer.

2.1.1 Grading and Marking

Materials shall bear the grademark, stamp or other identifying marks indicating grades of material and rules or standards under which produced. Such identifying marks on a material shall be in accordance with the rule or standard under which the material is produced, including requirements for qualifications and authority of the inspection organization, usage of authorized identification, and information included in the identification. The inspection agency for lumber shall be certified by the Board of Review, American Lumber Standards Committee, to grade the species used. Except for plywood, structural-use panels, and lumber, bundle marking will be permitted in lieu of marking each individual piece. Surfaces that are to be architecturally exposed to view shall not bear grademarks, stamps, or other types of identifying marks.

2.1.2 Sizes and Patterns

Lumber sizes and patterns shall conform to rules or standards under which produced. Unless otherwise specified, lumber shall be surfaced on four sides. Sizes and patterns for materials other than lumber shall conform to requirements of the rules or standards under which produced. Size references, unless otherwise specified, are nominal sizes, and actual sizes shall be within manufacturing tolerances allowed by the standard under which the product is produced.

2.1.3 Moisture Content

The maximum moisture content of untreated trim and wood siding shall be 6 to 8 percent at the time of delivery to the jobsite and when installed. Moisture content of all other material shall be in accordance with the standard under which the product is produced.

2.1.4 Wood Species

Solid wood materials are to be graded in accordance with AWI-02 for grade of work specified. Provide Select White Birch with plain sawn grain, of a

quality suitable for stained, transparent finish.

2.1.5 Not Used

2.1.6 Sheet Materials

2.1.6.1 Hardwood Plywood

Graded in accordance with AWI-02 for grade of work specified. Uniform White Maple species, with plain sliced grain, of quality suitable for stained, transparent finish.

2.1.6.2 Wood Particleboard / Fiberboard (MDF)

In accordance with ANSI O A208, with core composed of wood chips or sawdust and water resistant adhesive. in panels thick.

2.1.6.3 Hardboard

In accordance with ANSI A135.4, with pressed wood fiber with resin binder, tempered grade, thick, smooth one side, for use at drawer bottoms, gables, backs of casework and as indicated.

2.1.7 Veneer Materials

2.1.7.1 Wood Veneer

Uniform White Maple face species, plain sliced cut with grain suitable for stained, transparent finish and MDF particleboard core. Grade in accordance with AWI Custom standards. See individual woodwork items for additional information on cut and layout.

2.1.7.2 Low Pressure Laminate (Melamine)

For use at interior surfaces at casework. Texture to be matte finish and color to be white.

2.1.7.3 Plastic Laminate

In accordance with NEMA LD3, of type and construction to accommodate specified detailing. Refer to 09915 COLOR SCHEDULE for finish and color selections.

2.1.8 Hardware

2.1.8.1 Hinges

Hinges for swing doors to be self-closing, 125 degree flush overlay type with chrome finish.

2.1.8.2 Locks

Locks for casework to be 90 degree cam locks. Provide where indicated on drawings.

2.1.8.3 Shelf Standards

For built-in shelving within casework, provide 17 gauge aluminum, zinc finish, 5/8 inch wide, slotted pilaster standards for flush mounting.

Provide with bent tab aluminum shelf supports in quantity appropriate for number of shelves required.

2.1.8.4 Not Used

2.1.8.5 Pulls for Doors and Drawers

Typical pulls to be 75 mm (3 inch) high center to center, 8 mm (5/16 inch) diameter, wire pulls in brushed aluminum finish.

2.1.8.6 Grommets

Grommets in countertops to be clear anodized aluminum or stainless steel material. Grommet holes to be in diameter with snap-on matching cover caps. Provide where indicated on drawings.

2.1.8.7 Vanity Supports

Heavy duty steel angle "L" bracket supports are to be 495mm (19 1/2")deep by 317mm (12 1/2")high,in white,epoxy-coated finish. Support to be equivalent to Knape and Vogt Model #208 WH500.

2.1.8.8 Guest Room Closet Rods and Supports

Closet rods shall be 26mm (1-1/16 inch) outside diameter, heavy duty steel tubing with a wall thickness of 2.7mm (.109"),chrome-look finish and end flange brackets for mounting to wood supports. Rod to be equivalent to Knape and Vogt Model #770 Heavy Duty Tubing. Rod end supports to be equivalent to Knape and Vogt Model #734 with a chrome look finish. NOTE: Intermediate rod supports will not be accepted.

2.1.9 Wood Filler

Provide filler as recommended by AWI-02.

2.1.10 Not Used

2.1.11 Finishes

Prefabricated woodwork items to be shop finished in accordance with AWI-02, Section 1500 (Systems). Finish work to meet AWI Custom Standards. Unless noted otherwise, all woodwork to be stained and finished per AWI System TR-2, Catalyzed Lacquer, with satin sheen. Refer to 09915 COLOR SCHEDULE for colors of stain.

2.1.12 Woodwork Items (Refer to drawings for size, quantity and details)

2.1.12.1 Guest Room Mini bars

Base cabinet shall have plastic laminate veneer on MDF core on all exposed-to-view faces, with plastic laminate veneer countertop and front edge trim. Provide beveled joint in laminate at countertop edge. Shelf above shall have plastic laminate veneer on all surfaces. Back wall between countertop and shelf to have plastic laminate finish to match casework.

2.1.12.2 Guest Room Bathroom Vanities

Vanities shall have cultured marble vanity top, high apron 125 mm (5 inch) at accessible rooms),and high backsplash, and support as indicated.

Provide and coordinate cut-outs for toilet paper dispenser and drop-in sink (sink by Mechanical).

2.1.12.3 Guestroom Closet Shelving

Shelf shall have plastic laminate veneer on MDF core for all surfaces, including edges, with stained hardwood front edge trim. Shelf to be edge-supported on three sides by wood cleats with plastic laminate veneer. Closet rod to be mounted onto wood cleats and to clear span the opening.

2.1.12.4 Window Stools

Window stools shall be cultured marble, 750mm (3/4") thick in a matte finish. Refer to 09915 COLOR SCHEDULE for colors of cultured marble.

2.2 NAILS AND ANCHORS

Nails and anchors shall be the size and type best suited for the application and substrate.

2.3 Cultured Marble

Cultured marble to be a cast polymer product with simulated marble appearance conforming to requirements of ANSI Z 124-1995-Plastic Lavatory Units. Window sills shall be 19 mm (3/4 inch) thick in depth and lengths shown on drawings, with minimal joints. Vanities, aprons and backsplashes shall be 19 mm (3/4 inch) thick in sizes and configuration shown on drawings. Tub surrounds shall be 10 mm (3/8 inch) thick, trimless, matte finish panels with single panels at tub ends and a maximum of two panels with center joint for side of tub. Provide 150 mm (6 inch) high by 200 mm (8 inch) wide surface-mounted cultured marble soap dish in tub surrounds as indicated on drawings.

PART 3 EXECUTION

3.1 GENERAL

Fabricate and install woodwork in accordance with AWI Custom Quality Standards. Set and secure materials and components in place plumb and level. Carefully scribe work abutting other components, with maximum gaps of . Countersink anchorage devices at exposed locations, conceal with solid wood plugs of species to match surrounding wood and finish flush with surrounding surfaces. Install hardware in accordance with manufacturer's instructions.

3.2 WOOD TRIM

Interior wood trim shall be installed straight, plumb, level and with closely fitted joints. Exposed surfaces shall be machine sanded at the mill. Trim shall be coped at returns and interior angles and mitered at external corners. Blind nailing shall be used to the extent practical, and face nailing shall be set and stopped with a nonstaining putty to match the finish applied. Screws shall be used for attachment to meal; setting and stopping of screws shall be of the same quality as required where nails are used.

3.3 CULTURED MARBLE

Install cultured marble according to manufacturer's recommendations and in

accordance with drawings.

-- End of Section --

SECTION TABLE OF CONTENTS

DIVISION 07 - THERMAL & MOISTURE PROTECTION

SECTION 07110

BITUMINOUS DAMPPROOFING

09/98

PART 1 GENERAL

1.1 REFERENCES
1.2 SUBMITTALS
1.3 QUALIFICATIONS
1.4 DELIVERY, STORAGE AND HANDLING

PART 2 PRODUCTS

2.1 EMULSION-BASED ASPHALT DAMPPROOFING
2.1.1 Fibrated Emulsion-Based Asphalt

PART 3 EXECUTION

3.1 SURFACE PREPARATION
3.1.1 Protection of Surrounding Areas
3.1.2 Masonry Surfaces
3.1.3 Concrete Surfaces
3.1.4 Metal Surfaces
3.2 APPLICATION OF BITUMINOUS DAMPPROOFING
3.2.1 Emulsion-Based Asphalt
3.3 CLEAN-UP
3.4 PROTECTION

-- End of Section Table of Contents --

SECTION 07110

BITUMINOUS DAMPPROOFING
09/98

PART 1 GENERAL

1.1 REFERENCES

The publications listed below form a part of this specification to the extent referenced. The publications are referred to in the text by basic designation only.

AMERICAN SOCIETY FOR TESTING AND MATERIALS (ASTM)

ASTM D 1227	(1995) Emulsified Asphalt Used as a Protective Coating for Roofing

1.2 SUBMITTALS

Government approval is required for submittals with a "G" designation; submittals not having a "G" designation are for information only. When used, a designation following the "G" designation identifies the office that will review the submittal for the Government. The following shall be submitted in accordance with Section 01330 SUBMITTAL PROCEDURES:

SD-07 Certificates

Materials;

Certificates attesting that the materials meet the requirements specified.

1.3 QUALIFICATIONS

Work shall be performed by skilled laborers thoroughly experienced in the type of bituminous dampproofing work specified to meet the requirements of the contract.

1.4 DELIVERY, STORAGE AND HANDLING

Dampproofing materials shall be delivered to the project site in the original sealed containers bearing the name of manufacturer, contents and brand name, and stored in a weathertight enclosure to prevent moisture damage and absorption. Dampproofing materials shall be protected from freezing. Asphalt shall be stored off the ground on pallets, and covered on top and all sides with breathable-type canvas tarpaulins. Plastic sheets cause condensation buildup; and therefore, shall not be used to cover dampproofing materials. Care shall be taken during storage to avoid separation or settlement of the emulsion components. Damaged or deteriorated materials shall be removed from the project site.

PART 2 PRODUCTS

2.1 EMULSION-BASED ASPHALT DAMPPROOFING

2.1.1 Fibrated Emulsion-Based Asphalt

Fibrated emulsion-based asphalt dampproofing shall be cold-applied type conforming to ASTM D 1227 Type IV, asbestos-free, manufactured of refined asphalt, emulsifiers and selected clay, fibrated with mineral fibers. For brush application, emulsion shall contain a minimum of 59 percent solids by weight, 56 percent solids by volume. For trowel application, emulsion shall contain a minimum of 58 percent solids by weight, 55 percent solids by volume.

PART 3 EXECUTION

3.1 SURFACE PREPARATION

Surfaces scheduled for bituminous dampproofing shall be prepared in accordance with dampproofing manufacturer's recommendations. Surface preparation shall be approved prior to dampproofing application.

3.1.1 Protection of Surrounding Areas

Before starting the dampproofing work, the surrounding areas and surfaces shall be protected from spillage and migration of asphalt onto other work. Drains and conductors shall be protected from clogging with asphalt.

3.1.2 Masonry Surfaces

Surfaces shall be free of oil, grease, dirt, laitance, loose material, frost, debris and other contaminants. Mortar joints shall be flush and free of extraneous mortar and chipped or broken masonry.

3.1.3 Concrete Surfaces

Surfaces shall be properly cured, free of form release agents, oil, grease, dirt, laitance, loose material, frost, debris and other contaminants. Form ties shall be cut flush with surface. Sharp protrusions and form match lines shall be removed. Holes, voids, spalled areas and cracks which can damage the dampproofing materials and impair performance shall be repaired. Rough surfaces shall be parged with a well-adhering coat of cement mortar.

3.1.4 Metal Surfaces

Metal surfaces shall be dry and be free of rust, scale, loose paint, oil, grease, dirt, frost and debris.

3.2 APPLICATION OF BITUMINOUS DAMPPROOFING

3.2.1 Emulsion-Based Asphalt

Emulsion-based asphalt dampproofing work shall not be performed in temperatures below 40 degrees F. Emulsions shall have a smooth and uniform consistency at time of application. Dampproofing materials shall be applied in accordance with manufacturer's published instructions to produce a smooth uniform dry film of not less than thick without voids or defects. Dull or porous spots shall be recoated. Dampproofing materials shall seal tightly around pipes and other items projecting through dampproofing. Rates of application shall be as follows:

a. Primer: cold-applied.

b. Fibrated Dampproofing: cold-applied with, brush or trowel.

3.3 CLEAN-UP

Surfaces of other work which are stained with dampproofing materials shall be cleaned with a cleaner recommended by dampproofing manufacturer.

3.4 PROTECTION

The completed dampproofing work shall be protected from damage during and after construction.

-- End of Section --

SECTION TABLE OF CONTENTS

DIVISION 07 - THERMAL & MOISTURE PROTECTION

SECTION 07220

ROOF INSULATION

05/96

PART 1 GENERAL

1.1 REFERENCES
1.2 SUBMITTALS
1.3 STORAGE OF MATERIALS
1.4 FIRE CLASSIFICATION

PART 2 PRODUCTS

2.1 Not Used
2.2 INSULATION
2.2.1 Not Used
2.2.2 Not Used
2.2.3 Not Used
2.2.4 Fiberboard
2.2.5 Not Used
2.2.6 Polyisocyanurate
2.3 NAILS AND FASTENERS
2.3.1 Not Used
2.3.2 Fasteners
2.3.3 Metal Disks
2.4 Not Used
2.5 Not Used
2.6 Not Used
2.7 WOOD NAILERS
2.8 Vapor Retarder

PART 3 EXECUTION

3.1 COORDINATION REQUIREMENTS
3.2 ENVIRONMENTAL CONDITIONS
3.3 SUBSTRATE PREPARATION
3.4 HEATING OF ASPHALT Not Used
3.5 VAPOR RETARDER
3.5.1 General Application
3.5.2 Edge Requirements
3.6 INSTALLATION OF WOOD NAILERS
3.7 APPLICATION OF INSULATION
3.7.1 Mechanical Fastening
3.7.2 Not Used
3.7.3 Foam Insulation
3.7.4 Not Used
3.7.5 Protection Requirements
3.8 INSPECTION

-- End of Section Table of Contents --

SECTION 07220

ROOF INSULATION
05/96

PART 1 GENERAL

1.1 REFERENCES

The publications listed below form a part of this specification to the extent referenced. The publications are referred to in the text by basic designation only.

AMERICAN SOCIETY FOR TESTING AND MATERIALS (ASTM)

ASTM C 208	(1995) Cellulosic Fiber Insulating Board
ASTM C 1289	(1995) Faced Rigid Cellular Polyisocyanurate Thermal Insulation Board
ASTM E 84	Test Method for Surface Burning Characteristics of Building Materials

FACTORY MUTUAL ENGINEERING AND RESEARCH (FM)

FM P9513	(1996) Loss Prevention Data for Roofing Contractors
FM P7825a	(1998) Approval Guide Fire Protection
FM P7825c	(1998) Approval Guide Building Materials

UNDERWRITERS LABORATORIES (UL)

UL Bld Mat Dir	(1998) Building Materials Directory

1.2 SUBMITTALS

Government approval is required for submittals with a "G" designation; submittals not having a "G" designation are for information only or as otherwise designated. When used, a designation following the "G" designation identifies the office that will review the submittal for the Government. The following shall be submitted in accordance with Section 01330 SUBMITTAL PROCEDURES:

SD-07 Certificates

Insulation;
Vapor Retarder;

Certificate attesting that the polyisocyanurate insulation contains recovered material and showing estimated percent of recovered material. Certificates of compliance for vapor retarder

materials.

SD-08 Manufacturer's Instructions

Application of Insulation;

Insulation manufacturer's recommendations for the application and installation of insulation.

Inspection;

The inspection procedure for insulation installation, prior to start of roof insulation work.

1.3 STORAGE OF MATERIALS

Insulation shall be kept dry at all times, before, during, and after delivery to the site and shall be stored in an enclosed building or in a closed trailer. Wet insulation, shall be permanently removed from the site.

1.4 FIRE CLASSIFICATION

Insulation shall have been tested as part of a roof construction assembly of the type used in this project and the construction shall be listed as Fire-Classified in UL Bld Mat Dir or Class I in FM P7825a, except for installation on precast concrete roof deck panels.

PART 2 PRODUCTS

2.1 Not Used

2.2 INSULATION

Insulation shall be a standard product of the manufacturer and shall be factory marked with the manufacturer's name or trade mark, the material specification number, the R-value at (75 degrees F), and the thickness. Minimum thickness shall be as recommended by the manufacturer. Boards shall be marked individually. The thermal resistance of insulation shall be not less than the R-value shown on the drawings. The insulation manufacturing process shall not include chlorofluoro carbons (CFC) or formaldehydes. Insulation and fiberboard shall contain the highest practicable percentage of material which has been recovered or diverted from solid waste (e.g., postconsumer waste), but not including material reused in a manufacturing process. Where two materials have comparable price and performance, the one having the higher recovered material content shall be selected. Insulation shall be one, or a combination of the following materials:

2.2.1 Not Used

2.2.2 Not Used

2.2.3 Not Used

2.2.4 Fiberboard

ASTM C 208 Type II, Grade 1 or 2, roof insulating board with a minimum recovered material content of 80 percent, treated with bituminous

impregnation. Bituminous impregnation shall be limited to 4 percent by weight when used over steel decks. Board size to be by 13 mm (1/2 inch) thick.

2.2.5 Not Used

2.2.6 Polyisocyanurate

ASTM C 1289 Type II, with fiber glass reinforced facer on both sides, and having minimum recovered material content of 9 percent by weight of the polyisocyanurate portion of the board. Insulation thickness shall be as shown on drawings.

2.3 NAILS AND FASTENERS

Nails and fasteners shall conform to the following requirements:

2.3.1 Not Used

2.3.2 Fasteners

Insulation manufacturer's recommendations except holding power, when driven, shall be not less than 40 pounds each in steel deck. Fasteners for steel or concrete decks shall conform to FM P7825c for Class I roof deck construction, and shall be spaced to withstand an uplift pressure of

2.3.3 Metal Disks

Flat and not less than thickness. Disks used with nails or fasteners for securing fiberboard insulation shall be minimum (l inch) diameter. Disks used with nails or fasteners for securing other board insulation shall be minimum (2-1/8 inches) in diameter.

2.4 Not Used

2.5 Not Used

2.6 Not Used

2.7 WOOD NAILERS

Wood nailers shall conform to Section 06100 ROUGH CARPENTRY, including preservative treatment. Edge nailers shall be not less than nominal (6 inches) wide and of thickness to finish flush with the top surface of the insulation. Surface mounted nailers shall be a nominal (3 inches) wide by the full thickness of the insulation.

2.8 Vapor Retarder

Vapor retarder shall be a reinforced, 3 ply low density polyethylene general all-purpose fire retardant vapor barrier sheeting, with Class 1, Class A flame spread rating per ASTM E 84. Vapor retarder to have minimum puncture resistance of 129 N (29 pounds) when tested in accordance with ASTM D-4833 and a maximum permeance rating of 50 grains per hour when tested in accordance with ASTM E-96.

PART 3 EXECUTION

3.1 COORDINATION REQUIREMENTS

Insulation and roofing membrane shall be finished in one operation up to the line of termination at the end of each day's work. Completed sections shall be waterproofed when more than one day is required to finish the roofing. Phased construction will not be permitted.

3.2 ENVIRONMENTAL CONDITIONS

Air temperature shall be above (40 degrees F) and there shall be no visible ice, frost, or moisture on the roof deck when the insulation and roofing are installed.

3.3 SUBSTRATE PREPARATION

The substrate construction of any bay or section of the building shall be completed before insulation or vapor retarder work is begun thereon. Vents and other items penetrating the roof shall be secured in position and properly prepared for flashing. Substrate surface shall be smooth, clean, and dry at time of application.

3.4 HEATING OF ASPHALT Not Used

3.5 VAPOR RETARDER

3.5.1 General Application

Vapor retarder shall be loose laid directly over steel or concrete deck, with field joints and penetrations taped with asphaltic mastic tape, recommended by vapor barrier manufacturer. All punctures and tears shall be repaired to maintain integrity of vapor barrier.3.5.2 Edge Requirements

At walls, eaves and rakes, the vapor retarder shall be extended onto the adjacent surface and sealed in place. At roof penetrations other than walls, eaves and rakes, the vapor retarder shall be extended to form a lap which shall later be folded back over the edge of the insulation and sealed in place..

3.6 INSTALLATION OF WOOD NAILERS

Nailers shall be secured to cast-in-place deck materials by not less than (3/8 inch) diameter anchors embedded in the deck not over (4 feet) on centers. Nailers shall be secured to precast deck materials and to steel decks as indicated. Bolt anchors shall have nuts and washers countersunk, and bolts shall be cut flush with top of nailer. Powder-actuated fasteners, sized and spaced for nailer anchorage equivalent to that specified and indicated, may be used when approved. Surface mounted nailers shall be installed parallel with the roof slope and shall be spaced not over (4 feet) face-to-face, except that where the insulation units are less than (4 feet) in length the nailers shall be spaced to minimize cutting of the insulation.

3.7 APPLICATION OF INSULATION

Insulation shall be laid in two or more layers. Units of insulation shall be laid in courses parallel with the roof slope. End joints shall be staggered and tightly butted. Insulation shall be cut to fit neatly against adjoining surfaces. Joints between insulation boards shall not exceed (1/4 inch). Joints in successive layers shall be staggered with respect to joints of preceding layer. Where insulation is applied over

steel deck, long edge joints shall continuously bear on surfaces of the steel deck. Insulation to be mechanically secured to substrate. Insulation which can be readily lifted after installation is not considered to be adequately secured. Insulation shall be applied so that all roof insulation applied each day is waterproofed the same day. Phased construction will not be permitted. Application of impermeable faced insulation shall be performed without damage to the facing.

3.7.1 Mechanical Fastening

Insulation shall be mechanically fastened. Method of attachment shall be in accordance with recommendations of the insulation manufacturer and wind uplift requirements specified.

3.7.2 Not Used

3.7.3 Foam Insulation

Polyisocyanurate insulation shall be isolated from the adhered elastomeric roof membrane by a separate layer of fiber board.

3.7.4 Not Used

3.7.5 Protection Requirements

The insulation shall be kept dry at all times. Insulation boards shall not be kicked into position. Exposed edges of the insulation shall be protected by cutoffs at the end of each work day or whenever precipitation is imminent. Cutoffs shall be as described in Section 07530. Cutoffs shall be removed when work is resumed. Edges of insulation at open spaces between insulation and parapets or other walls and spaces at curbs, scuttles, and expansion joints, shall be protected until permanent roofing and flashing is applied. Storing, walking, wheeling, or trucking directly on insulation or on roofed surfaces will not be permitted. Smooth, clean board or plank walkways, runways, and platforms shall be used, as necessary to distribute weight to conform to indicated live load limits of roof construction

3.8 INSPECTION

The Contractor shall establish and maintain an inspection procedure to assure compliance of the installed roof insulation with the contract requirements. Any work found not to be in compliance with the contract shall be promptly removed and replaced or corrected in an approved manner. Quality control shall include, but not be limited to, the following:

a. Observation of environmental conditions; number and skill level of insulation workers; start and end time of work.

b. Verification of certification, listing or label compliance with FM P9513.

c. Verification of proper storage and handling of insulation and vapor retarder materials before, during, and after installation.

d. Inspection of vapor retarder application, including edge envelopes and mechanical fastening.

e. Inspection of mechanical fasteners; type, number, length, and

spacing.

f. Coordination with other materials, cants, sleepers, and nailing strips.

g. Inspection of insulation joint orientation and laps between layers, joint width and bearing of edges of insulation on deck.

h. Installation of cutoffs and proper joining of work on subsequent days.

i. Continuation of complete roofing system installation to cover insulation installed same day.

-- End of Section --

SECTION TABLE OF CONTENTS

DIVISION 07 - THERMAL & MOISTURE PROTECTION

SECTION 07413

METAL SIDING

07/97

PART 1 GENERAL

1.1 REFERENCES
1.2 GENERAL REQUIREMENTS
1.2.1 Design
1.2.2 Architectural Considerations
1.3 SUBMITTALS
1.4 DELIVERY AND STORAGE
1.5 WARRANTIES

PART 2 PRODUCTS

2.1 SIDING
2.1.1 Internal and External Corners
2.1.2 Trim, Closure or End Caps, Flashings, Base and Trim
2.1.3 Wall Panels
2.2 FACTORY COLOR FINISH
2.2.1 Not Used
2.2.2 Formability Test
2.2.3 Accelerated Weathering, Chalking Resistance and Color Change
2.2.4 Humidity Test
2.2.5 Impact Resistance
2.2.6 Abrasion Resistance Test
2.3 ACCESSORIES
2.4 FASTENERS
2.4.1 Screws
2.4.2 End-Welded Studs
2.4.3 Explosive Actuated Fasteners
2.4.4 Blind Rivets
2.4.5 Bolts
2.5 INSULATION
2.5.1 Blanket Insulation
2.5.2 Insulating Sheathing
2.6 VAPOR RETARDER
2.7 EXTERIOR SHEATHING
2.8 SEALANT
2.9 GASKETS AND INSULATING COMPOUNDS

PART 3 EXECUTION

3.1 INSTALLATION
3.1.1 Siding and Accessories
3.1.1.1 Lap Type Panels with Exposed Fasteners

-- End of Section Table of Contents --

SECTION 07413

METAL SIDING
07/97

PART 1 GENERAL

1.1 REFERENCES

The publications listed below form a part of this specification to the extent referenced. The publications are referred to in the text by basic designation only.

ALUMINUM ASSOCIATION (AA)

AA-02	(1994) Aluminum Design Manual: Specifications and Guidelines for Aluminum Structures

AMERICAN SOCIETY FOR TESTING AND MATERIALS (ASTM)

ASTM B 209	(1996) Aluminum and Aluminum-Alloy Sheet and Plate
ASTM D 522	(1993a) Mandrel Bend Test of Attached Organic Coatings
ASTM D 968	(1993) Abrasion Resistance of Organic Coatings by Falling Abrasive
ASTM D 2244	(1993) Calculation of Color Differences from Instrumentally Measured Color Coordinates
ASTM D 2247	(1994) Testing Water Resistance of Coatings in 100% Relative Humidity
ASTM D 2794	(1993) Resistance of Organic Coatings to the Effects of Rapid Deformation (Impact)
ASTM D 3359	(1995) Measuring Adhesion by Tape Test
ASTM D 4214	(1989) Evaluating the Degree of Chalking of Exterior Paint Films
ASTM D 4587	(1991) Conducting Tests on Paint and Related Coatings and Materials Using a Fluorescent UV-Condensation Light- and Water- Exposure Apparatus

AMERICAN SOCIETY OF CIVIL ENGINEERS (ASCE)

ASCE 7	(1995) Minimum Design Loads for Buildings and Other Structures

1.2 GENERAL REQUIREMENTS

1.2.1 Design

Criteria, loading combinations, and definitions shall be in accordance with ASCE 7. Maximum calculated fiber stress shall not exceed the allowable value in the AISI or AA manuals; a one third overstress for wind is allowed. Midspan deflection under maximum design loads shall be limited to L/180. Contract drawings show the design wind loads and the extent and general assembly details of the metal siding. Members and connections not shown on the drawings shall be designed by the Contractor. Siding panels and accessories shall be the products of the same manufacturer. Aluminum siding design shall be in accordance with AA-02.

1.2.2 Architectural Considerations

Panel profile shall be as shown on the drawings.

1.3 SUBMITTALS

Government approval is required for submittals with a "G" designation; submittals not having a "G" designation are for information only or as otherwise designated. When used, a designation following the "G" designation identifies the office that will review the submittal for the Government. The following shall be submitted in accordance with Section 01330 SUBMITTAL PROCEDURES:

SD-02 Shop Drawings

Siding; G-AE

Drawings consisting of catalog cuts, design and erection drawings, shop coating and finishing specifications, and other data as necessary to clearly describe design, materials, sizes, layouts, construction details, fasteners, and erection. Drawings shall be accompanied by engineering design calculations for the siding panels.

SD-04 Samples

Siding; G-AE

One piece of each type and finish (exterior and interior) to be used, minimum (12 inches) long, full width.

Fasteners;

Two samples of each type to be used with statement regarding intended use.

Sealant;

One sample, approximately (1 pound), with descriptive data and color selection.

SD-07 Certificates

Siding;
Installation;
Accessories;

Certificates attesting that the panels and accessories conform to the requirements specified. Certified laboratory test reports showing that the sheets to be furnished are produced under a continuing quality control program and that a representative sample consisting of not less than 5 pieces has been tested and has met the quality standards specified for factory color finish. Mill certification for structural bolts, siding, and wall liner panels.

1.4 DELIVERY AND STORAGE

Materials shall be delivered to the site in a dry and undamaged condition and stored out of contact with the ground. Materials shall be covered with weathertight coverings and kept dry. Storage accommodations for metal siding shall provide good air circulation and protection from surface staining.

1.5 WARRANTIES

The Contractor shall provide a weather tight warranty for the metal siding for a period of 20 years to include siding panel assembly, 10 years against the wear of color finish, and 10 years against the corrosion of fasteners caused by ordinary wear and tear by the elements. The warranties shall start upon final acceptance of the work or the date the Government takes possession, whichever is earlier.

PART 2 PRODUCTS

2.1 SIDING

Panels shall be aluminum and shall have a factory color finish. Profile depth to be 25 mm (1 inch) and rib pitch to be 100 mm (4 inch), equivalent to "4 Rib" manufactured by Reynolds Architectural Products. Ribbed wall panels shall be fastened to framework using exposed or concealed fasteners. Length of sheets shall be sufficient to cover the entire height of any unbroken wall surface when length of run is (30 feet) or less. When length of run exceeds (30 feet), each sheet in the run shall extend over two or more spans. Sheets longer than (30 feet) may be furnished if approved by the Contracting Officer. Width of sheets with overlapping configurations shall provide not less than (44 inches) of coverage in place. Wall panels shall have edge configurations for overlapping adjacent sheets.

2.1.1 Internal and External Corners

Same materials, thickness, and finish as siding; of profile to suit system; brake formed shop cut and factory mitered to required angles. Outside corners are to be mitered.

2.1.2 Trim, Closure or End Caps, Flashings, Base and Trim

Same material, thickness, and finish, where exposed, as sheet stock. Brake form to required profiles.

2.1.3 Wall Panels

Aluminum Alloy 3004 conforming to ASTM B 209, temper as required for the forming operation, minimum (0.040 inch) thick. Surface to be stucco

embossed, and factory pre-painted by the coil-coating process.

2.2 FACTORY COLOR FINISH

Panels shall have a factory applied manufacturer's standard 2-coat, thermocured system composed of specially formulated inhibitive primer and custom colored fluoropolymer color topcoat containing not less than 70 percent polyvinylidene floride resin by weight with a total minimum dry film thickness of 0.023 mm (0.9 mil) and 30 percent reflective gloss when tested according to ASTM D 523. Finish to be on the exposed side. Color shall be as specified in Section 09915 COLOR SCHEDULE. The interior color finish shall consist of a backer coat with a dry film thickness of (0.5 mil). The exterior color finish shall meet the test requirements specified below.

2.2.1 Not Used

2.2.2 Formability Test

When subjected to testing in accordance with ASTM D 522 Method B, (1/8 inch) diameter mandrel, the coating film shall show no evidence of fracturing to the naked eye.

2.2.3 Accelerated Weathering, Chalking Resistance and Color Change

A sample of the sheets shall be tested in accordance with ASTM D 4587. The coating shall withstand the weathering test without cracking, peeling, blistering, loss of adhesion of the protective coating, or corrosion of the base metal. Protective coating that can be readily removed from the base metal with tape in accordance with ASTM D 3359, Test Method B, shall be considered as an area indicating loss of adhesion. Following the accelerated weathering test, the coating shall have a chalk rating not less than No. 8 in accordance with ASTM D 4214 test procedures, and the color change shall not exceed 5 CIE or Hunter Lab color difference (delta E) units in accordance with ASTM D 2244.

2.2.4 Humidity Test

When subjected to a humidity cabinet test in accordance with ASTM D 2247 for 3000 hours, a scored panel shall show no signs of blistering, cracking, creepage or corrosion.

2.2.5 Impact Resistance

Factory-painted sheet shall withstand direct and reverse impact in accordance with ASTM D 2794 (0.500 inch diameter hemispherical head indenter, equal to (1.5 times the metal thickness in mils, expressed in inch-pounds), with no loss of adhesion.

2.2.6 Abrasion Resistance Test

When subjected to the falling sand test in accordance with ASTM D 968, Method A, the coating system shall withstand a minimum of [50] [80] liters of sand before the appearance of the base metal. The term "appearance of base metal" refers to the metallic coating on steel or the aluminum base metal.

2.3 ACCESSORIES

Wall flashing, sill flashing at PTAC unit, soffit trim, metal closure strips, caps, and similar metal siding accessories shall be the manufacturer's standard products. Exposed metal accessories shall be finished to match the panels furnished. Molded closure strips shall be bituminous-saturated fiber, closed-cell or solid-cell synthetic rubber or neoprene, or polyvinyl chlorided premolded to match configuration of the panels and shall not absorb or retain water.

2.4 FASTENERS

Fasteners for aluminum panels shall be manufacturer's standard system in aluminum or corrosion resisting steel. Fasteners for attaching wall panels to supports shall provide both tensile and shear strength of not less than (750 pounds) per fastener. Fasteners for accessories shall be the manufacturer's standard. Exposed wall fasteners shall be color finished or provided with color caps to match the panels.

2.4.1 Screws

Screws shall be as recommended by the manufacturer.

2.4.2 End-Welded Studs

Automatic end-welded studs shall be shouldered type with a shank diameter of not less than (3/16 inch) and cap or nut for holding panels against the shoulder.

2.4.3 Explosive Actuated Fasteners

Fasteners for use with explosive actuated tools shall have a shank of not less than (0.145 inch) with a shank length of not less than (1/2 inch) for fastening panels to steel and not less than (1 inch) for fastening panels to concrete.

2.4.4 Blind Rivets

Blind rivets shall be aluminum with (3/16 inch) nominal diameter shank or stainless steel with (1/8 inch) nominal diameter shank. Rivets shall be threaded stem type if used for other than the fastening of trim. Rivets with hollow stems shall have closed ends.

2.4.5 Bolts

Bolts shall be not less than (1/4 inch) diameter, shouldered or plain shank as required, with proper nuts.

2.5 INSULATION

Thermal resistance of insulation shall be not less than the R-values shown on the contract drawings. R-values shall be determined at a mean temperature of (75 degrees F) in accordance with ASTM C 518. Insulation shall be a standard product with the insulation manufacturer, factory-marked or identified with insulation manufacturer's name or trademark and R-value. Identification shall be on individual pieces or individual packages.

2.5.1 Blanket Insulation

Insulation placed between the steel studs shall be batt or blanket type

glass fiber conforming to ASTM C 665, Type I. Insulation shall have a flame spread not in excess of 75 and a smoke developed rating not in excess of 150 when tested in accordance with ASTM E 84. The stated R-value of the insulation shall be certified by an independent Registered Professional Engineer if tests are conducted in the insulation manufacturer's laboratory.

2.5.2 Insulating Sheathing

Insulating sheathing shall be provided at wall cavities at metal stud walls as indicated on drawings. Insulating sheathing shall comply with ASTM C1289, Type 1, Class 1 and shall polyisocyanurate foam core with a reinforced radiant barrier aluminum foil facer bonded to each side. Insulating sheathing shall be provided in 1200 by 2400 mm (4 by 8 foot) rigid boards and in thickness as indicated on drawings. Facers for insulating sheathing shall serve as the moisture barrier in cavity wall construction when joints are fully taped and sealed.

2.6 VAPOR RETARDER

The vapor retarder shall be polyethylene film conforming to ASTM D 2103, 0.15 mm (6 mil) minimum thickness.

2.7 EXTERIOR SHEATHING

Exterior gypsum sheathing that is installed on the exterior side of the cold-formed steel framing system shall have a minimum thickness of 13 mm (1/2 inch) and shall be 1.2 m (4 feet) wide. Gypsum sheathing shall conform to ASTM C79/C79M. Gypsum sheathing shall have a water-resistant gypsum core with a water-repellent paper firmly bonded to the core.

2.8 SEALANT

Sealant shall be an elastomeric type containing no oil or asphalt. Exposed sealant shall be colored to match the applicable building color and shall cure to a rubberlike consistency.

2.9 GASKETS AND INSULATING COMPOUNDS

Gaskets and insulating compounds shall be nonabsorptive and suitable for insulating contact points of incompatible materials. Insulating compounds shall be nonrunning after drying.

PART 3 EXECUTION

3.1 INSTALLATION

Installation shall be in accordance with the manufacturer's erection instructions and drawings. Dissimilar materials which are not compatible when contacting each other shall be insulated from each other by means of gaskets or insulating compounds. Improper or mislocated drill holes shall be plugged with an oversize screw fastener and gasketed washer; however, panels with an excess of such holes or with such holes in critical locations shall not be used. Exposed surfaces and edges shall be kept clean and free from sealant, metal cuttings, hazardous burrs, and other foreign material. Stained, discolored, or damaged sheets shall be removed from the site.

3.1.1 Siding and Accessories

Siding shall be applied with the ribs in the horizontal position. Accessories shall be fastened into framing members, except as otherwise approved. Closure strips shall be provided as indicated and where necessary to provide weathertight construction.

3.1.1.1 Lap Type Panels with Exposed Fasteners

End laps shall be made over framing members with fasteners into framing members approximately (2 inches) from the end of the overlapping sheet. Side laps shall be laid away from the prevailing winds. Spacing of fasteners shall present an orderly appearance and shall not exceed: (8 inches) on center at end laps of siding, (8 inches) on center at connection of siding to intermediate supports, and (16 inches) on center at side laps of siding except when otherwise approved. Side and end laps of siding and joints at accessories shall be sealed. Fasteners shall be installed in straight lines within a tolerance of (1/2 inch) in the length of a bay. Fasteners shall be driven normal to the surface and to a uniform depth to seat the gasketed washers properly.

-- End of Section --

SECTION TABLE OF CONTENTS

DIVISION 07 - THERMAL & MOISTURE PROTECTION

SECTION 07421

COMPOSITE METAL BUILDING PANELS

mm/yy

PART 1 GENERAL

1.1 REFERENCES
1.2 GENERAL REQUIREMENTS
1.2.1 System Description
1.2.2 Performance
1.2.3 QUALITY ASSURANCE
1.2.3.1 Fabricator and Installer Qualifications
1.2.3.2 Quality Standards
1.2.3.3 Fabrication
1.2.3.4 Strength Integrity
1.2.3.5 Fire Rating
1.3 SUBMITTALS
1.4 DELIVERY AND STORAGE
1.5 FIELD VERIFICATION
1.6 WARRANTIES
1.6.1 Warranty

PART 2 PRODUCTS

2.1 PANELS
2.1.1 Aluminum Sheet Stock
2.1.2 Core
2.2 FACTORY COLOR FINISH
2.2.1 Not Used
2.2.2 Formability Test
2.2.3 Accelerated Weathering, Chalking Resistance and Color Change
2.2.4 Humidity Test
2.2.5 Impact Resistance
2.2.6 Abrasion Resistance Test
2.3 SHOP FABRICATED COMPONETS
2.3.1 Corner Fabrication
2.3.2 Weep Holes
2.3.3 Adjacent Materials
2.3.4 Tolerances
2.4 ACCESSORIES
2.5 FASTENERS
2.6 INSULATION
2.7 VAPOR RETARDER
2.8 EXTERIOR SHEATHING
2.9 SEALANT
2.10 GASKETS AND INSULATING COMPOUNDS
2.11 EXPANSION JOINTS

PART 3 EXECUTION

3.1 INSTALLATION
3.1.1 Fasteners
3.1.2 Panel Joints
3.1.3 Anchorage
3.1.4 Joints and Sealant
3.2 TOLERANCES

-- End of Section Table of Contents --

SECTION 07421

COMPOSITE METAL BUILDING PANELS
mm/yy

PART 1 GENERAL

1.1 REFERENCES

The publications listed below form a part of this specification to the extent referenced. The publications are referred to in the text by basic designation only.

ALUMINUM ASSOCIATION (AA)

AA-02	(1994) Aluminum Design Manual: Specifications and Guidelines for Aluminum Structures

AMERICAN SOCIETY FOR TESTING AND MATERIALS (ASTM)

ASTM B 209	(1996) Aluminum and Aluminum-Alloy Sheet and Plate
ASTM D 522	(1993a) Mandrel Bend Test of Attached Organic Coatings
ASTM D 968	(1993) Abrasion Resistance of Organic Coatings by Falling Abrasive
ASTM D 2244	(1993) Calculation of Color Differences from Instrumentally Measured Color Coordinates
ASTM D 2247	(1994) Testing Water Resistance of Coatings in 100% Relative Humidity
ASTM D 2794	(1993) Resistance of Organic Coatings to the Effects of Rapid Deformation (Impact)
ASTM D 3359	(1995) Measuring Adhesion by Tape Test
ASTM D 4214	(1989) Evaluating the Degree of Chalking of Exterior Paint Films
ASTM D 4587	(1991) Conducting Tests on Paint and Related Coatings and Materials Using a Fluorescent UV-Condensation Light- and Water- Exposure Apparatus

1.2 GENERAL REQUIREMENTS

1.2.1 System Description

Preformed and prefinished composite metal facing panel system of vertical

profile; shop fabricated and site installed with complete furred framing/anchorage assembly. Composite panel system must be provided by panel manufacturer's authorized architectural distributor, fabricator and installer. Contract documents must be adhered to for acceptance of the panel system. Aluminum panel design shall be in accordance with AA-02.

1.2.2 Performance

Preformed metal panel system to withstand code imposed design loads. Maximum allowable deflection of span: 1/180. System to accommodate movement of components without buckling, failure of joint seals, undue stress on fasteners, or other detrimental effects, when subject to seasonal temperature ranges. System to accommodate tolerance of structure. Provide positive drainage to exterior for moisture entering or condensation occurring within panel system.

1.2.3 QUALITY ASSURANCE

1.2.3.1 Fabricator and Installer Qualifications

Fabricator must have a minimum of five years experience as a manufacturer's authorized distributor, fabricator and installer, specializing in performing work of this Section, with documented experience for projects of this scope and within this climatic region.

1.2.3.2 Quality Standards

Highest standard of workmanship available to the industry in fabrication and installation of the composite panels specified is required. Standard general construction dimensional deviations will not be acceptable on this project.

1.2.3.3 Fabrication

Composite panels shall be totally shop fabricated. No field fabrication will be acceptable. All panels are to arrive on job-site formed and ready for proper attachment method and installation.

1.2.3.4 Strength Integrity

Panels must be tested to ASTM criteria D-1781-76 for bond integrity, simulating its resistance to delamination, with minimum values of the following:

Bond Strength	214 psi (Vertical Pull / ASTM C-247)
Peel Strength	115 Nmm/mm

1.2.3.5 Fire Rating

Where panels are included in a wall system which is required to provide a rated fire resistance, provide panels wich comply with code requirements.

1.3 SUBMITTALS

Government approval is required for submittals with a "G" designation; submittals not having a "G" designation are for information only or as otherwise designated. When used, a designation following the "G" designation identifies the office that will review the submittal for the Government. The following shall be submitted in accordance with Section 01330 SUBMITTAL PROCEDURES:

SD-02 Shop Drawings

Panel System; G-AE

Drawings consisting of design and erection drawings, shop coating and finishing specifications, and other data as necessary to clearly describe design, materials, sizes, layouts, construction details, fasteners, and erection.

SD-03 Product Data

Calculations;

Submit product engineering design calculations indicating assembled panel structural capabilities and all necessary support and accessory components.

SD-04 Samples

Panel; G-AE

Two pieces of each(exterior) panel type, finish and color to be used, minimum to illustrate color, sheen and texture.

Sealant;

One sample, approximately (1 pound), with descriptive data and color selection.

SD-07 Certificates

Panel;
Installation;
Accessories;

Certificates attesting that the panels and accessories conform to the requirements specified. Certified laboratory test reports showing that the sheets to be furnished are produced under a continuing quality control program and that a representative sample consisting of not less than 5 pieces has been tested and has met the quality standards specified for factory color finish.

1.4 DELIVERY AND STORAGE

Fabricated components shall be delivered to the site in a dry and undamaged condition and stored out of contact with the ground. Materials shall be covered with weathertight coverings and kept dry. Protect finish and edges of components in accordance with manufacturer's instructions and recommendations.

1.5 FIELD VERIFICATION

Verify actual locations of composite building panels and other construction to which composite building panels must fit, by accurate field measurements before fabrication: show recorded measurements on final shop drawings. Coordinate fabrication schedule with construction progress to avoid delay of Work.

1.6 WARRANTIES

Provide five (5) year manufacturer's written warranty.

1.6.1 Warranty

All materials and workmanship provided are guaranteed against defects, including coverage for degradation of panel finish, color fading caused by exposure to weather, water tightness and integrity of seals after completion and final acceptance of the Work. Defects due to faulty materials or workmanship developed during the guarantee period shall be satisfactorily repaired or replaced at no expense to the Government.

PART 2 PRODUCTS

2.1 PANELS

Panels shall be composed of a composite material consisting of two face sheets of smooth finished aluminum bonded to either side of an extruded flat polyethylene core. Panel thickness shall be 4mm.

2.1.1 Aluminum Sheet Stock

ASTM B 209, 30003 Aluminum Alloy; 0.020 inches thick.

2.1.2 Core

Low density, extruded polyethylene, formulated for fire resistance.

2.2 FACTORY COLOR FINISH

Panels shall have a factory applied manufacturer's standard 2-coat, thermocured system composed of specially formulated inhibitive primer and custom colored fluoropolymer color topcoat containing not less than 70 percent polyvinylidene floride resin by weight with a total minimum dry film thickness of 0.023 mm (0.9 mil) and 30 percent reflective gloss when tested according to ASTM D 523. Finish to be on the exposed side. Color shall be as specified in Section 09915 COLOR SCHEDULE. The exterior color finish shall meet the test requirements specified below.

2.2.1 Not Used

2.2.2 Formability Test

When subjected to testing in accordance with ASTM D 522 Method B, (1/8 inch) diameter mandrel, the coating film shall show no evidence of fracturing to the naked eye.

2.2.3 Accelerated Weathering, Chalking Resistance and Color Change

A sample of the sheets shall be tested in accordance with ASTM D 4587. The coating shall withstand the weathering test without cracking, peeling, blistering, loss of adhesion of the protective coating, or corrosion of the base metal. Protective coating that can be readily removed from the base metal with tape in accordance with ASTM D 3359, Test Method B, shall be considered as an area indicating loss of adhesion. Following the accelerated weathering test, the coating shall have a chalk rating not less than No. 8 in accordance with ASTM D 4214 test procedures, and the color change shall not exceed 5 CIE or Hunter Lab color difference (delta E)

units in accordance with ASTM D 2244.

2.2.4 Humidity Test

When subjected to a humidity cabinet test in accordance with ASTM D 2247 for 3000 hours, a scored panel shall show no signs of blistering, cracking, creepage or corrosion.

2.2.5 Impact Resistance

Factory-painted sheet shall withstand direct and reverse impact in accordance with ASTM D 2794 (0.500 inch diameter hemispherical head indenter, equal to (1.5 times the metal thickness in mils, expressed in inch-pounds), with no loss of adhesion.

2.2.6 Abrasion Resistance Test

When subjected to the falling sand test in accordance with ASTM D 968, Method A, the coating system shall withstand a minimum of [50] [80] liters of sand before the appearance of the base metal. The term "appearance of base metal" refers to the metallic coating on steel or the aluminum base metal.

2.3 SHOP FABRICATED COMPONETS

Fabricate panel with lines, breaks and angles sharp and true, surface free from weave, warp or buckle. Fabricate panels into sections with a minimum 38mm (1-1/2 inch), 90 degree return, or as indicated on Drawings. All panel corner returns to have envelope design. Butt joint corner return edges not acceptable.

2.3.1 Corner Fabrication

Fabricate panel sections with envelope pan corners.

2.3.2 Weep Holes

Locate at underside of panels, 7mm (1/4 inch) diameter holes, 600 (24 inches) on center, with a weep hole near every vertical joint. Cover holes on inside panel face with aluminum 18 x 14 mesh screen, glued to panel.

2.3.3 Adjacent Materials

Where aluminum abuts or joins adjacent dissimilar metals, execute joint to facilitate drainage and minimize possibility of corrosion.

2.3.4 Tolerances

Allow for field adjustments, as recommended by panel manufacturer, where final dimensions cannot be established by field measurements before completion of panel manufacturing.

2.4 ACCESSORIES

Wall flashing, sills, parapet and soffit trim, scupper boxes, metal closure strips, caps, and similar metal panel accessories shall be of panel material finished to match the wall panels.

2.5 FASTENERS

Fasteners for aluminum panels shall be concealed stainless steel of manufacturer's recommended type to suit application. Fasteners for attaching wall panels to supports shall provide both tensile and shear strength of not less than (750 pounds) per fastener. Exposed wall fasteners are not acceptable.

2.6 INSULATION

Insulation for exterior walls shall be as specified in 04220 NONBEARING MASONRY VENEEER / STEEL STUD WALLS, paragraph 2.5.2 Insulating Sheathing.

2.7 VAPOR RETARDER

Vapor barrier for exterior walls shall be as specified in 05400 COLD-FORMED STEEL FRAMING.

2.8 EXTERIOR SHEATHING

Exterior sheathing for exterior walls shall be as specified in 05400 COLD-FORMED STEEL FRAMING.

2.9 SEALANT

Sealant shall be "Dow 795 Silicone" or equal. Exposed sealant shall be colored to match the applicable building color and shall cure to a rubberlike consistency.

2.10 GASKETS AND INSULATING COMPOUNDS

Gaskets and insulating compounds shall be nonabsorptive and suitable for insulating contact points of incompatible materials. Insulating compounds shall be non running after drying.

2.11 EXPANSION JOINTS

Manufacturer's standard continuous wet seal with open cell ethafoam back up. Color to be selected by architect.

PART 3 EXECUTION

3.1 INSTALLATION

Installation shall be in accordance with the manufacturer's erection instructions and approved shop drawings. Provide closure panels indicated and where necessary to provide weathertight construction. Dissimilar materials which are not compatible when contacting each other shall be insulated from each other by means of gaskets or insulating compounds. Exposed surfaces and edges shall be kept clean and free from sealant, metal cuttings, hazardous burrs, and other foreign material. Stained, discolored, or damaged sheets shall be removed from the site.

3.1.1 Fasteners

Provide a concealed fastener and furring installation system, with no fasteners exposed. Conform to panel manufacturer's instructions for installation of concealed fasteners. Provide shims as required to meet dimensional requirements.

3.1.2 Panel Joints

Locate panel joints over supports. Provide aluminum channel caps at panel ends and edges.

3.1.3 Anchorage

Anchor panels securely in place, providing for thermal and structural movement as necessary. Panels to be installed to allow for expansion and contraction of 140 degree F. ambient temperature change, with panels remaining flat, plumb and true. Following standard construction tolerances will not be acceptable Erect the work plumb, level and true.

3.1.4 Joints and Sealant

All joints shall be sealed with sealant. Apply extruded silicone gasket seal at face of caulking joint. Maintain neat appearance. Panel sealant work is a part of this section and is to be done by the installer of the panels. Comply with procedures and materials recommended by the manufacturer and fabricator.

3.2 TOLERANCES

Maximum Offset From True Alignment Between Adjacent Members Butting or In Line: 1.5 mm (1/16 inch). Maximum Variation from Vertical and Horizontal Alignment of Erected Panels: 6 mm in 6000 mm (1/4 inch in 20 feet). Panel bow tolerances shall be within 0.8% of panel dimension in width and length.

This page was intentionally left blank for duplex printing.

SECTION TABLE OF CONTENTS

DIVISION 07 - THERMAL & MOISTURE PROTECTION

SECTION 07530

ELASTOMERIC ROOFING (EPDM)

09/95

PART 1 GENERAL

1.1 REFERENCES
1.2 SUBMITTALS
1.3 GENERAL REQUIREMENTS
1.3.1 Delivery and Storage
1.3.2 Fire Resistance
1.3.3 Wind Uplift Requirements
1.3.4 Warranty

PART 2 PRODUCTS

2.1 ADHESIVES
2.2 FASTENERS
2.3 FLASHING
2.4 MEMBRANE
2.5 PREFABRICATED ACCESSORIES
2.6 PAVERS
2.7 WALKWAYS

PART 3 EXECUTION

3.1 ENVIRONMENTAL CONDITIONS
3.2 PREPARATION
3.3 INSTALLATION
3.3.1 Flashing
3.3.2 Expansion Joints
3.3.3 Membrane Installation
3.3.4 Cutoffs
3.3.5 Installation of Pavers
3.3.6 Installation of Walkways
3.4 PROTECTION OF FINISHED ROOFING
3.5 INSPECTION

-- End of Section Table of Contents --

SECTION 07530

ELASTOMERIC ROOFING (EPDM)
09/95

PART 1 GENERAL

1.1 REFERENCES

The publications listed below form a part of this specification to the extent referenced. The publications are referred to in the text by basic designation only.

AMERICAN SOCIETY FOR TESTING AND MATERIALS (ASTM)

ASTM D 4637	(1996) EPDM Sheet Used in Single-Ply Roof Membrane
ASTM E 108	(1996) Fire Tests of Roof Coverings

FACTORY MUTUAL ENGINEERING AND RESEARCH (FM)

FM P9513	(1996) Loss Prevention Data for Roofing Contractors

UNDERWRITERS LABORATORIES (UL)

UL 580	(1994; Rev thru February 1998) Tests for Uplift Resistance of Roof Assemblies
UL 790	(1997) Tests for Fire Resistance of Roof Covering Materials
UL 1256	(1998) Fire Test of Roof Deck Constructions

1.2 SUBMITTALS

Government approval is required for submittals with a "G" designation; submittals not having a "G" designation are for information only or as otherwise designated. When used, a designation following the "G" designation identifies the office that will review the submittal for the Government. The following shall be submitted in accordance with Section 01330 SUBMITTAL PROCEDURES:

SD-02 Shop Drawings

Roofing System; G-AO

Drawings showing size of sheets, position of sheets and splices, flashing details, fastening patterns where applicable for insulation and membrane sheets, and expansion joint details. Detail showing construction of water cutoffs to be used at membrane terminations at the end of a day's work to seal the roofing system from water intrusion.

SD-03 Product Data

Installation;

Manufacturer's instructions for preparing and installing the membrane, flashings, seams, insulation, nailers and other accessories.

Inspection;

The inspection procedure for substrate suitability including decks, curbs and insulation installation, prior to start of the work.

Inspection procedures during and after placement of the membrane, and after completion of work by other trades.

SD-07 Certificates

Materials; .

Certificates of compliance attesting that the roofing system and materials meet specification requirements. The certificates shall list the components required for the specified fire and wind uplift resistance ratings.

1.3 GENERAL REQUIREMENTS

Elastomeric membrane roofing shall be fully adhered to the roof surfaces indicated. Roofing membrane sheet widths shall be consistent with membrane attachment methods and wind uplift requirements, and shall be as large as practical to minimize joints. Membrane shall be free of defects and foreign material. Flashing work shall be coordinated to permit continuous membrane installation operations. Applied insulation shall be weatherproofed by the membrane on the same day.

1.3.1 Delivery and Storage

Materials shall be delivered to the jobsite in the manufacturer's original, unopened packages, clearly marked with the manufacturer's name, brand name, and description of contents. Materials other than ballast shall be stored in clean, dry areas. Storage temperatures shall be as specified by the manufacturer. Materials stored on the roof shall not exceed one day's supply and shall be distributed so as not to exceed the roof live load capacity.

1.3.2 Fire Resistance

The completed roof system shall have a ASTM E 108 (same test as UL 790 and FM P9513, Appendix A) Class A classification, and meet fire test requirements of UL 1256 or FM P9513, Appendix B for roof deck construction. Compliance of each component of the roofing system shall be evidenced by label or by written certification from the manufacturer.

1.3.3 Wind Uplift Requirements

Fully adhered and mechanically attached roofing systems shall have an I-90 UL 580 Class Rating <u>or</u> FM P9513, Appendix C Windstorm Classification.

Ratings from other independent laboratories may be substituted provided that the tests, requirements and ratings are documented to be equivalent, to the satisfaction of the Contracting Officer.

1.3.4 Warranty

Manufacturer's standard warranty for the roofing system shall be provided for not less than 10 years from acceptance of the work. Warranty shall state that manufacturer shall repair or replace defective materials if the roofing system leaks or allows the insulation beneath the membrane to become wet during the period of the warranty.

PART 2 PRODUCTS

2.1 ADHESIVES

Adhesives, splicing cements, solvents, and sealants shall be as recommended by the membrane manufacturer.

2.2 FASTENERS

Fasteners for sheet-metal flashing shall be corrosion resistant steel annular-type nails or screws. Fasteners for anchoring the roofing membrane shall be as approved by the membrane manufacturer and identical to those used to obtain the wind uplift rating.

2.3 FLASHING

Flashing shall be of ultra-violet resistant materials as recommended by the membrane manufacturer. Prefabricated shaped flashings shall be used where possible. Sheared edges of metal flashings that contact the membrane shall be turned into a tight hem.

2.4 MEMBRANE

Membrane shall conform to ASTM D 4637, Type I EPDM, Grade 1; Class U,(0.060 inch) minimum thickness.

2.5 PREFABRICATED ACCESSORIES

Pipe seals and expansion joint covers shall be types and sizes recommended by the membrane manufacturer.

2.6 PAVERS

Pavers shall be concrete,, made from (3000 psi) air entrained concrete per Section 03300 CAST-IN-PLACE STRUCTURAL CONCRETE. Where drainage would be blocked by walkway pavers, spaces shall be provided between or below pavers to facilitate drainage. If spaces are provided between pavers, they shall be at least (1 in) wide and no more than(24 in.) apart. Space below pavers shall be provided by elevating pavers on pedestals.

2.7 WALKWAYS

Protective membrane shall be a supplemental layer of membrane material adhered to the primary roof membrane, in the width and location shown on drawings.

PART 3 EXECUTION

3.1 ENVIRONMENTAL CONDITIONS

Membrane shall not be installed in high wind, inclement weather or when there is visible ice, frost or moisture on the deck, insulation or membrane. Membrane shall not be installed when air temperature is below the minimum specified by the membrane manufacturer.

3.2 PREPARATION

The substrate of any bay or section of the building shall be complete and suitable for insulation and membrane installation before roofing is begun. Insulation over which elastomeric roofing is installed shall conform to Section 07220 ROOF INSULATION. Surfaces against which membrane is applied shall be smooth, clean, and free from dirt, water, dew, oil, grease, sharp edges and construction debris; all joints over (1/4 inch) wide shall be sealed; joints over (1/2 inch) between insulation boards shall be filled with the same insulation. Wood nailers shall comply with Section 06100 ROUGH CARPENTRY.

3.3 INSTALLATION

Installation shall comply with the manufacturer's approved instructions, except as otherwise specified.

3.3.1 Flashing

Edges of membrane, projections through the roof and changes in roof planes shall be flashed. The flashing material shall be extended and sealed a minimum of (3 inches) on each side of the fasteners which attach the membrane to nailers. The installed flashing shall be fastened at the top of the flashing a maximum of (12 inches) on center under metal counter-flashing or cap.

3.3.2 Expansion Joints

Expansion joints shall be covered using prefabricated covers or elastomeric flashing in accordance with the manufacturer's recommendations.

3.3.3 Membrane Installation

Membrane shall be applied in accordance with the manufacturer's instructions and the following requirements. Adjoining sheets comprising the membrane shall be adhered one to another using a butyl-based contact adhesive. Minimum width of the laps shall be (3 in.) A primer shall be used before applying the contact adhesive if required by the membrane manufacturer. In applying the contact adhesive, the minimum thickness of the wet film shall be in accordance with the membrane manufacturer's recommendations. If manufacturer's recommendations are not available, the minimum thickness shall be (0.025 inch.) A wet film thickness gage shall be used to determine wet film thickness. Direction of lap shall be such that water flows over lap. Membrane joints shall be free of wrinkles or fishmouths. Before application of the contact adhesive, the rubber surfaces to be mated shall be well cleaned. Joints shall be inspected over entire length after completion and defective areas shall be resealed and patched. Damaged areas of membrane shall be removed and replaced with new materials, lapping underlying membrane by at least (3 inches) on all sides.

3.3.4 Cutoffs

Cutoffs shall be installed if work day is ended or interrupted by bad weather before roof section is complete. The insulation line shall be straightened using loose-laid cut insulation and the membrane shall be sealed to the roof deck. Flutes in metal decking shall be sealed off along the cutoff edge. Membrane shall be pulled free or cut to expose the insulation when resuming work, and cut insulation sheets used for fill-in shall be removed as necessary to maintain the staggered pattern.

3.3.5 Installation of Pavers

Concrete pavers shall be installed on a loose-laid pad of the membrane material extending at least (1 inch) beyond the walkway material, and as specified by the manufacturer.

3.3.6 Installation of Walkways

Where indicated on drawings, protective membrane (without pavers) shall be adhered to primary roof membrane. Stone ballast shall not be used at placed below or above walkways.

3.4 PROTECTION OF FINISHED ROOFING

The roofing membrane shall be protected from damage by other trades. After completion of work by other trades, the protection shall be removed and the roof shall be inspected. Any damage shall be repaired in accordance with the recommendations of the roofing manufacturer.

3.5 INSPECTION

The Contractor shall establish and maintain an inspection procedure to assure compliance of the installed elastomeric roofing with the contract requirements. The procedure shall include a checklist of points to be observed. Any work found not to be in compliance with the contract shall be promptly removed and replaced or corrected in an approved manner. Quality control shall include, but not be limited to, the following:

a. Observation of environmental conditions; number and skill level of roofing workers; start and end time of various tasks; condition of substrate.

b. Verification of compliance of materials before, during and after installation.

c. Inspection of insulation, nailers, flashings, penetrations and work requiring coordination with roofing.

d. Inspection of membrane placement, splicing, and attachment.

e. Inspection of placement of ballast and walkways.

f. A roofing technician responsible directly to the Contractor and experienced in the construction of elastomeric roofing systems shall perform the inspection functions and be on the site whenever roofing operations are in progress.

-- End of Section --

SECTION TABLE OF CONTENTS

DIVISION 07 - THERMAL & MOISTURE PROTECTION

SECTION 07600

SHEET METALWORK, GENERAL

10/94

PART 1 GENERAL

1.1 REFERENCES
1.2 GENERAL REQUIREMENTS
1.2.1 Coordination
1.3 SUBMITTALS
1.4 DELIVERY, STORAGE, AND HANDLING

PART 2 PRODUCTS

2.1 MATERIALS
2.1.1 Accessories
2.1.2 Aluminum Extrusions
2.1.3 Bituminous Cement
2.1.4 Sealant
2.1.5 Fasteners
2.1.6 Felt
2.1.7 Polyvinyl Chloride (PVC) Reglets
2.1.8 Aluminum Alloy Sheet and Plate
2.1.9 Not Used
2.1.10 Not Used
2.1.11 Solder
2.1.12 Through-Wall Flashing

PART 3 EXECUTION

3.1 GENERAL
3.2 EXPANSION JOINTS
3.3 PROTECTION OF ALUMINUM
3.3.1 Paint
3.3.2 Nonabsorptive Tape or Gasket
3.4 CONNECTIONS AND JOINTING
3.4.1 Not Used
3.4.2 Riveting
3.4.3 Seaming
3.5 CLEATS
3.6 FLASHINGS
3.6.1 Base Flashing
3.6.2 Counter Flashings
3.6.3 Not Used
3.6.4 Through-Wall Flashing
3.6.4.1 Lintel Flashing
3.6.4.2 Sill Flashing
3.7 Not Used
3.8 Not Used
3.9 Not Used

3.10 CONTRACTOR QUALITY CONTROL

-- End of Section Table of Contents --

SECTION 07600

SHEET METALWORK, GENERAL
10/94

PART 1 GENERAL

1.1 REFERENCES

The publications listed below form a part of this specification to the extent referenced. The publications are referred to in the text by basic designation only.

AMERICAN SOCIETY FOR TESTING AND MATERIALS (ASTM)

ASTM B 32	(1996) Solder Metal
ASTM B 209	(1996) Aluminum and Aluminum-Alloy Sheet and Plate
ASTM B 221	(1996) Aluminum and Aluminum-Alloy Extruded Bars, Rods, Wire, Profiles, and Tubes
ASTM D 226	(1997) Asphalt-Saturated Organic Felt Used in Roofing and Waterproofing
ASTM D 1784	(1996) Rigid Poly(Vinyl Chloride) (PVC) Compounds and Chlorinated Poly(Vinyl Chloride) (CPVC) Compounds
ASTM D 2822	(1991; R 1997) Asphalt Roof Cement
ASTM D 4586	(1993) Asphalt Roof Cement, Asbestos Free

SHEET METAL AND AIR CONDITIONING CONTRACTORS NATIONAL ASSOCIATION (SMACNA)

SMACNA-02	(1993; Errata) Architectural Sheet Metal Manual

1.2 GENERAL REQUIREMENTS

Sheet metalwork shall be accomplished to form weathertight construction without waves, warps, buckles, fastening stresses or distortion, and shall allow for expansion and contraction.

1.2.1 Coordination

Cutting, fitting, drilling, and other operations in connection with sheet metal required to accommodate the work of other trades shall be performed by sheet metal mechanics. Installation of sheet metal items used in conjunction with roofing shall be coordinated with roofing work to permit continuous roofing operations. Sheet metalwork pertaining to heating, ventilating, and air conditioning is specified in Division 15.

1.3 SUBMITTALS

Government approval is required for submittals with a "G" designation; submittals not having a "G" designation are for information only. When used, a designation following the "G" designation identifies the office that will review the submittal for the Government. The following shall be submitted in accordance with Section 01330 SUBMITTAL PROCEDURES:

SD-02 Shop Drawings

Materials; G-AO

Drawings of sheet metal items showing weights, gauges or thicknesses; types of materials; expansion-joint spacing; fabrication details; and installation procedures.

1.4 DELIVERY, STORAGE, AND HANDLING

Materials shall be adequately packaged and protected during shipment and shall be inspected for damage, dampness, and wet-storage stains upon delivery to the jobsite. Materials shall be clearly labeled as to type and manufacturer. Sheet metal items shall be carefully handled to avoid damage. Materials shall be stored in dry, ventilated areas until immediately before installation.

PART 2 PRODUCTS

2.1 MATERIALS

Lead, lead-coated metal, and galvanized steel shall not be used. Any metal listed by SMACNA-02 for a particular item may be used, unless otherwise specified or indicated. Materials shall conform to the requirements specified below and to the thicknesses and configurations established in SMACNA-02. Different items need not be of the same metal, except that if copper is selected for any exposed item, all exposed items shall be copper.

2.1.1 Accessories

Accessories and other items essential to complete the sheet metal installation, though not specifically indicated or specified, shall be provided.

2.1.2 Aluminum Extrusions

ASTM B 221, Alloy 6063, Temper T5.

2.1.3 Bituminous Cement

Type I asphalt cement conforming to ASTM D 2822 or ASTM D 4586.

2.1.4 Sealant

Unless otherwise specified, sealant shall be an elastomeric weather resistant sealant as specified in Section 07900 JOINT SEALING.

2.1.5 Fasteners

Fasteners shall be compatible with the fastened material and shall be the type best suited for the application.

2.1.6 Felt

ASTM D 226, Type I.

2.1.7 Polyvinyl Chloride (PVC) Reglets

ASTM D 1784, Class 14333D, (0.075 inch) minimum thickness.

2.1.8 Aluminum Alloy Sheet and Plate

ASTM B 209, minimum .8 mm (.032 inch) thick, clear anodized, form, alloy, and temper appropriate for use. Aluminum parapet coping to match roofing sheet metal in color and finish.

2.1.9 Not Used

2.1.10 Not Used

2.1.11 Solder

ASTM B 32, 95-5 tin-antimony.

2.1.12 Through-Wall Flashing

a. Not Used

b. Not Used

c. Composite membrane through-wall flashing not less than (40 mils) thick overall, with a (32 mils) thick self-healing sheet material composed of rubberized asphalt integrally bonded to (8 mils) of cross laminated high density polyethylene film each side. For use at all through wall flashing at base of masonry walls, steel lintels, window heads, and similar locations in wall system and as noted on Drawings.

PART 3 EXECUTION

3.1 GENERAL

Items such as coping and flashing shall be fabricated in conformance with SMACNA-02 and as indicated. Unless otherwise specified or indicated, exposed edges shall be folded back to form a 1/2 inch hem on the concealed side, and bottom edges of exposed vertical surfaces shall be angled to form drips. Bituminous cement shall not be placed in contact with roofing membranes.

3.2 EXPANSION JOINTS

Expansion joints shall be provided as specified in SMACNA-02. Expansion joints in continuous sheet metal shall be provided at (32 foot) intervals for aluminum, except extruded aluminum gravel stops and fasciae which shall have expansion joints at not more than (12 foot) spacing. Joints shall be evenly spaced. An additional joint shall be provided where the distance between the last expansion joint and the end of the continuous run is more than half the required interval spacing.

3.3 PROTECTION OF ALUMINUM

Aluminum shall not be used where it will be in contact with copper or where it will contact water which flows over copper surfaces. Aluminum that will be in contact with wet or pressure-treated wood, mortar, concrete, masonry, or ferrous metals shall be protected against galvanic or corrosive action by one of the following methods:

3.3.1 Paint

Aluminum surfaces not exposed to view shall be solvent cleaned and given one coat of zinc-molybdate primer and one coat of aluminum paint as specified in Section 09900 PAINTING, GENERAL.

3.3.2 Nonabsorptive Tape or Gasket

Nonabsorptive tape or gasket shall be placed between the adjoining surfaces and cemented to the aluminum surface using a cement compatible with aluminum.

3.4 CONNECTIONS AND JOINTING

3.4.1 Not Used

3.4.2 Riveting

Joints in aluminum sheets (0.040 inch) or less in thickness shall be mechanically made.

3.4.3 Seaming

Flat-lock and soldered-lap seams shall finish not less than (1 inch) wide. Unsoldered plain-lap seams shall lap not less than (3 inches) unless otherwise specified. Flat seams shall be made in the direction of the flow.

3.5 CLEATS

A continuous cleat shall be provided where indicated or specified to secure loose edges of the sheet metalwork. Butt joints of cleats shall be spaced approximately (1/8 inch) apart. The cleat shall be fastened to supporting wood construction with nails evenly spaced not over (12 inches) on centers. Where the fastening is to be made to concrete or masonry, screws shall be used and shall be driven in expansion shields set in concrete or masonry.

3.6 FLASHINGS

Flashings shall be installed at locations indicated on Drawings and as specified below. Sealing shall be according to the flashing manufacturer's recommendations. Flashings shall be installed at intersections of roof with vertical surfaces and at projections through roof, except that flashing for heating and plumbing, including piping, roof, and floor drains, and for electrical conduit projections through roof or walls are specified in other sections. Except as otherwise indicated, counter flashings shall be provided over base flashings. Perforations in flashings made by masonry anchors shall be covered up by an application of bituminous plastic cement at the perforation. Flashing shall be installed on top of joint reinforcement. Flashing shall be formed to direct water to the outside of the system.

3.6.1 Base Flashing

Metal base flashing shall be coordinated with roofing work. Metal base flashing shall be set in plastic bituminous cement over the roofing membrane, nailed to nailing strip, and secured in place on the roof side with nails spaced not more than (3 inches) on centers. Metal base flashing shall not be used on built-up roofing.

3.6.2 Counter Flashings

Except as otherwise indicated, counter flashings shall be provided over base flashings. Counter flashing shall be installed as shown on the drawings . Where bituminous base flashings are provided, the counter flashing shall extend down as close as practicable to the top of the cant strip. Counter flashing shall be factory formed to provide spring action against the base flashing.

3.6.3 Not Used

3.6.4 Through-Wall Flashing

Through-wall flashing includes sill, lintel, shelf angle, parapet cap, base of wall flashing and as shown on drawings. In masonry walls, flashing shall be laid with a layer of mortar below the flashing so that the total thickness of the mortar and flashing are the same thickness as the regular mortar joints. Turn through-wall flashings up a minimum of in wall cavity and bed into mortar joints of masonry or seal to concrete or sheathing over steel stud framed back-up. Joints in flashing shall be lapped and sealed. Flashing shall be one piece for lintels and sills.

3.6.4.1 Lintel Flashing

Lintel flashing shall extend the full length of lintel. Flashing shall extend horizontally through the wall above the lintels, to beyond the exterior face of wall, or shall be applied over top of masonry and precast concrete lintels. End dams shall be provided in flashing at ends of lintels. Bedjoints of lintels at control joints shall be underlaid with sheet metal bond breaker.

3.6.4.2 Sill Flashing

Sill flashing shall extend the full width of the sill and not less than (4 inches) beyond ends of sill except at control joint where the flashing shall be terminated at the end of the sill.

3.7 Not Used

3.8 Not Used

3.9 Not Used

3.10 CONTRACTOR QUALITY CONTROL

The Contractor shall establish and maintain a quality control procedure for sheet metal used in conjunction with roofing to assure compliance of the installed sheet metalwork with the contract requirements. Any work found not to be in compliance with the contract shall be promptly removed and replaced or corrected in an approved manner. Quality control shall include, but not be limited to, the following:

a. Observation of environmental conditions; number and skill level of sheet metal workers; condition of substrate.

b. Verification of compliance of materials before, during, and after installation.

c. Inspection of sheet metalwork for proper size and thickness, fastening and joining, and proper installation.

The actual quality control observations and inspections shall be documented and a copy of the documentation furnished to the Contracting Officer at the end of each day. A roofing technician responsible directly to the Contractor and experienced in the construction of similar roofing systems and related work shall perform the quality control functions and be on the site when roofing operations are in progress.

-- End of Section --

SECTION TABLE OF CONTENTS

DIVISION 07 - THERMAL & MOISTURE PROTECTION

SECTION 07810

SPRAY-APPLIED FIREPROOFING

05/98

PART 1 GENERAL

1.1 REFERENCES
1.2 SUBMITTALS
1.3 DELIVERY AND STORAGE
1.4 ENVIRONMENTAL CONDITIONS
1.4.1 Temperature
1.4.2 Ventilation
1.5 INSTALLER QUALIFICATIONS
1.6 MANUFACTURER'S SERVICES
1.7 FIRE RESISTANCE RATING
1.8 EXTENT OF FIREPROOFING

PART 2 PRODUCTS

2.1 SPRAY-APPLIED FIREPROOFING
2.1.1 Dry Density and Cohesion/Adhesion
2.1.1.1 Concealed Structural Components
2.1.1.2 Exposed Structural Components
2.1.2 Deflection
2.1.3 Bond-Impact
2.1.4 Compressive Strength
2.1.5 Corrosion
2.2 SEALER
2.3 WATER

PART 3 EXECUTION

3.1 SURFACE PREPARATION
3.2 PROTECTION
3.3 MIXING
3.4 APPLICATION
3.4.1 Sequence
3.4.2 Application Technique
3.5 FIELD TESTS
3.5.1 Thickness, Density, Cohesion/Adhesion
3.5.2 Repair

-- End of Section Table of Contents --

SECTION 07810

SPRAY-APPLIED FIREPROOFING
05/98

PART 1 GENERAL

1.1 REFERENCES

The publications listed below form a part of this specification to the extent referenced. The publications are referred to in the text by basic designation only.

AMERICAN SOCIETY FOR TESTING AND MATERIALS (ASTM)

ASTM E 119	(1997) Fire Tests of Building Construction and Materials
ASTM E 605	(1993; R 1996) Thickness and Density of Sprayed Fire-Resistive Material (SFRM) Applied to Structural Members
ASTM E 736	(1992) Cohesion/Adhesion of Sprayed Fire-Resistive Materials Applied to Structural Members
ASTM E 759	(1992; R 1996) Effect of Deflection on Sprayed Fire-Resistive Material Applied to Structural Members
ASTM E 760	(1992; R 1996) Effect of Impact on Bonding of Sprayed Fire-Resistive Material Applied to Structural Members
ASTM E 761	(1992) Compressive Strength of Sprayed Fire-Resistive Material Applied to Structural Members
ASTM E 937	(1993) Corrosion of Steel by Sprayed Fire-Resistive Material (SFRM) Applied to Structural Members
ASTM E 1042	(1992; R 1997) Acoustically Absorptive Materials Applied by Trowel or Spray
ASTM G 21	(1990) Determining Resistance of Synthetic Polymeric Materials to Fungi

UNDERWRITERS LABORATORIES (UL)

UL 263	(1997; Rev Jun 1998) Fire Tests of Building Construction and Materials
UL Fire Resist Dir	(1997) Fire Resistance Directory (2 Vol.)

1.2 SUBMITTALS

Government approval is required for submittals with a "G" designation; submittals not having a "G" designation are for information only. When used, a designation following the "G" designation identifies the office that will review the submittal for the Government. The following shall be submitted in accordance with Section 01330 SUBMITTAL PROCEDURES:

SD-03 Product Data

Fireproofing Material; G-AO

Data identifying performance characteristics of fireproofing material. Data shall include recommended application requirements and indicate thickness of fireproofing that must be applied to achieve each required fire rating.

SD-04 Samples

Spray-Applied Fireproofing; G-AO

One sample panel, (18 inches) square, for each specified type of fireproofing. Also, a designated sample area of not less than (100 square feet) shall be prepared. Sample area shall be representative of typical installation of fireproofing including metal decks, joists, beams, columns and attachments. Equipment, materials and procedures used in the sample area shall be the same as, or representative of, that to be used in the work. The sample area shall be approved prior to proceeding with fireproofing work in any other area. The approved sample area shall be used as a reference standard for applied fireproofing material. Sample area shall remain in place and open to observation until all spray-applied fireproofing is completed and accepted, at which time it may become part of the work.

SD-06 Test Reports

UL Test Assembly;

Reports and test records, attesting that the fireproofing material conforms to the specified requirements. Each test report shall conform to the report requirements specified by the test method.

SD-07 Certificates

Installer Qualifications;

Manufacturer's certification that each listed installer is qualified and trained to install the specified fireproofing. Evidence that each fireproofing installer has had a minimum of 3 years experience in installing the specified type of fireproofing.

Manufacturer's Inspection;

Manufacturer's certification that the spray-applied fireproofing in the entire project complies with the manufacturer's criteria and recommendations.

1.3 DELIVERY AND STORAGE

Packaged material shall be delivered in the original unopened containers, marked to show the names of the brand and the manufacturer. Fireproofing material shall be kept dry until ready to be used, and shall be stored off the ground, under cover and away from damp surfaces. Damaged or opened containers will be rejected. Material with shelf-life shall be applied prior to expiration of the shelf-life.

1.4 ENVIRONMENTAL CONDITIONS

1.4.1 Temperature

Substrate and ambient air temperatures shall be maintained above 4 degrees C (40 degrees F) during application and for 24 hours before and after application. Relative humidity shall be maintained within the limits recommended by the fireproofing manufacturer.

1.4.2 Ventilation

Adequate ventilation shall be provided to properly dry the fireproofing after application. In enclosed areas, a minimum of 4 air exchanges per hour shall be provided by forced air circulation.

1.5 INSTALLER QUALIFICATIONS

Each installer of fireproofing material shall be trained and have a minimum of 3 years experience in the installation of fireproofing of the type specified.

1.6 MANUFACTURER'S SERVICES

The manufacturer or its representative shall be onsite prior to, periodically during, and at completion of the application, to provide the specified inspections and certifications; and to ensure that preparations are adequate and that the material is applied according to manufacturer's recommendations and the contract requirements.

1.7 FIRE RESISTANCE RATING

Fire resistance ratings shall be in accordance with the fire rated assemblies listed in UL Fire Resist Dir. Proposed materials not listed in UL Fire Resist Dir shall have fire resistance ratings at least equal to the UL Fire Resist Dir ratings as determined by an approved independent testing laboratory, based on tests specified in UL 263 or ASTM E 119.

1.8 EXTENT OF FIREPROOFING

Fireproofing shall not be applied to steel bearing members in elevator hoistways. All other load-bearing structural steel members which support walls or floors, including columns, beams, roof joists, and the underside of steel roof decks, shall be protected with spray-applied fireproofing to a fire resistance hour-rating of one hour unless otherwise indicated on drawings. Lintels and steel members that only supporting stair structures do not require fireproofing.

PART 2 PRODUCTS

2.1 SPRAY-APPLIED FIREPROOFING

Spray-applied fireproofing material, including sealer, shall conform to ASTM E 1042, Class (a), Category A, either Type I or Type II, except that the dust removed shall not exceed (0.0025 gram per square foot) of fireproofing material applied as specified in the project. Material shall be asbestos free, and shall resist fungus for a period of 28 days when tested in accordance with ASTM G 21.

2.1.1 Dry Density and Cohesion/Adhesion

Fireproofing shall have a minimum ASTM E 605 dry density and ASTM E 736 cohesion/adhesion properties as follows:

2.1.1.1 Concealed Structural Components

Fireproofing for structural components concealed above the ceiling, or within a wall, chase, or furred space, shall have a minimum average applied dry density of (15 pounds per cubic foot) and a cohesion/adhesion strength of .

2.1.1.2 Exposed Structural Components

Fireproofing for exposed structural components, except where otherwise specified or indicated, shall have a minimum applied dry density of (22 pounds per cubic foot) and a cohesion/adhesion strength of (300 pounds per square foot).

2.1.2 Deflection

Spray-applied fireproofing shall not crack, spall, or delaminate when tested in accordance with ASTM E 759.

2.1.3 Bond-Impact

Spray-applied fireproofing material shall not crack, spall or delaminate when tested in accordance with ASTM E 760.

2.1.4 Compressive Strength

The minimum compressive strength shall be (1000 psf) when tested in accordance with ASTM E 761.

2.1.5 Corrosion

Spray-applied fireproofing material shall not contribute to corrosion of test panels when tested as specified in ASTM E 937.

2.2 SEALER

Sealer shall be the type approved by the manufacturer of the fireproofing material and shall be contrast with fireproofing.

2.3 WATER

Water used for material mixing and surface preparation shall be potable.

PART 3 EXECUTION

3.1 SURFACE PREPARATION

Surfaces to be fireproofed shall be thoroughly cleaned of dirt, grease, oil, paint, loose rust, rolling lubricant, mill scale or other contaminants that will interfere with the proper bonding of the sprayed fireproofing to the substrate. Overhead areas to be fireproofed shall be cleared of all obstructions interfering with the uniform application of the spray-applied fireproofing. Hardware such as support sleeves, inserts, clips, hanger attachment devices and the like shall be installed prior to the application of the fireproofing. Condition of the surfaces shall be acceptable to the manufacturer prior to application of spray-applied fireproofing. Applications listed for use on primed surfaces shall be coordinated with the manufacturer and detailed in submittal item SD-01 Data.

3.2 PROTECTION

Surfaces not to receive spray-applied fireproofing shall be covered to prevent contamination by splatter, rebound and overspray. Exterior openings in areas to receive spray-applied fireproofing shall be covered prior to and during application of fireproofing with tarpaulins or other approved material. Surfaces not to receive fireproofing shall be cleaned of fireproofing and sealer.

3.3 MIXING

Fireproofing material shall be mixed in accordance with the manufacturer's recommendations.

3.4 APPLICATION

3.4.1 Sequence

Prior to application of fireproofing on each floor, the manufacturer shall inspect and approve application equipment, water supply and pressure, and the application procedures. Fireproofing shall be applied to underside of steel roof deck or steel floor assemblies only after respective roof or floor construction is complete. Fireproofing material shall be applied prior to the installation of ductwork, piping and conduits which would interfere with uniform application of the fireproofing. The Contractor shall not allow roof traffic during application and curing period.

3.4.2 Application Technique

Water pressure and volume shall be maintained to manufacturer's recommendations throughout the fireproofing application. Fireproofing material shall be applied to the thickness established for the specified fire resistance rating, in accordance with the procedure recommended by the manufacturer, and to a uniform density and texture. Fireproofing material shall not be tamped to achieve the desired density. Sealer shall be applied to all fireproofing.

3.5 FIELD TESTS

The applied fireproofing shall be tested by an approved independent testing laboratory, in approved locations, for density, cohesion/adhesion force as specified, and for thickness in accordance with ASTM E 605. Any area showing less than minimum requirements shall be corrected. Proposed corrective measures, in writing, shall be approved before starting the corrective action. Corrected work shall be retested.

3.5.1 Thickness, Density, Cohesion/Adhesion

Each structural component type shall be tested at floor and roof decks, beams, columns, joists, and trusses. Minimum average thickness shall be as [indicated] [or] required by UL Fire Resist Dir. Density and cohesion/adhesion shall be as specified.

3.5.2 Repair

Additional fireproofing material may be added to provide proper thickness. Rejected areas of fireproofing shall be corrected to meet specified requirements by adding fireproofing material to provide the proper thickness, or by removing defects and respraying with new fireproofing material. Repairs shall use same type of fireproofing material as originally applied. Repaired areas shall be retested and reinspected. Fireproofing material shall be applied to voids or damaged areas by hand-trowel, or by respraying.

-- End of Section --

This page was intentionally left blank for duplex printing.

SECTION TABLE OF CONTENTS

DIVISION 07 - THERMAL & MOISTURE PROTECTION

SECTION 07840

FIRESTOPPING

05/98

PART 1 GENERAL

1.1 REFERENCES
1.2 SUBMITTALS
1.3 GENERAL REQUIREMENTS
1.4 STORAGE AND DELIVERY
1.5 INSTALLER QUALIFICATIONS

PART 2 PRODUCTS

2.1 FIRESTOPPING MATERIALS
2.1.1 Fire Hazard Classification
2.1.2 Toxicity
2.1.3 Fire Resistance Rating
2.1.3.1 Through-Penetrations
2.1.3.2 Construction Joints and Gaps

PART 3 EXECUTION

3.1 PREPARATION
3.2 INSTALLATION
3.3 INSPECTION

-- End of Section Table of Contents --

SECTION 07840

FIRESTOPPING
05/98

PART 1 GENERAL

1.1 REFERENCES

The publications listed below form a part of this specification to the extent referenced. The publications are referred to in the text by basic designation only.

AMERICAN SOCIETY FOR TESTING AND MATERIALS (ASTM)

ASTM E 84	(1996a) Surface Burning Characteristics of Building Materials
ASTM E 119	(1995a) Fire Tests of Building Construction and Materials
ASTM E 814	(1994b) Fire Tests of Through-Penetration Fire Stops

UNDERWRITERS LABORATORIES (UL)

UL 723	(1996) Test for Surface Burning Characteristics of Building Materials
UL 1479	(1994; Rev thru Jul 1997) Fire Tests of Through-Penetration Firestops
UL 2079	(1997) Tests for Fire Resistance of Building Joint Systems
UL Fire Resist Dir	(1997) Fire Resistance Directory

1.2 SUBMITTALS

Government approval is required for submittals with a "G" designation; submittals not having a "G" designation are for information only. When used, a designation following the "G" designation identifies the office that will review the submittal for the Government. The following shall be submitted in accordance with Section 01330 SUBMITTAL PROCEDURES:

SD-02 Shop Drawings

Firestopping Materials; G-AO

Detail drawings including manufacturer's descriptive data, typical details, installation instructions and the fire-test data and/or report as appropriate for the fire resistance rated construction and location. Submittal shall indicate the firestopping material to be provided for each type of application.

When more than 5 penetrations or construction joints are to receive firestopping, drawings shall indicate location and type of application.

SD-07 Certificates

Firestopping Materials;

Certificates attesting that firestopping material complies with the specified requirements. The label or listing of the Underwriters Laboratories will be acceptable evidence. In lieu of the label or listing, a written certificate may be submitted from an approved, nationally recognized testing agency equipped to perform such services, stating that the items have been tested and conform to the specified requirements and testing methods.

1.3 GENERAL REQUIREMENTS

Firestopping shall consist of furnishing and installing a material or a combination of materials to form an effective barrier against the spread of flame, smoke and gases, and maintain the integrity of fire resistance rated walls, partitions, floors, and ceiling-floor assemblies, including through-penetrations and construction joints. Through-penetrations include the annular space around pipes, tubes, conduit, wires, cables and vents. Construction joints include those used to accommodate expansion, contraction, wind, or seismic movement; firestopping material shall not interfere with the required movement of the joint. Gaps requiring firestopping include gaps between curtain wall and the floor slab and between the top of fire-rated walls and the roof deck.

1.4 STORAGE AND DELIVERY

Materials shall be delivered in the original unopened packages or containers showing name of the manufacturer and the brand name. Materials shall be stored off the ground and shall be protected from damage and exposure to elements. Damaged or deteriorated materials shall be removed from the site.

1.5 INSTALLER QUALIFICATIONS

Installer of firestopping material shall be trained by the manufacturer or the manufacturer's representative, and shall have a minimum of 3 years experience in the installation of firestopping of the type specified.

PART 2 PRODUCTS

2.1 FIRESTOPPING MATERIALS

Firestopping materials shall consist of commercially manufactured products complying with the following minimum requirements:

2.1.1 Fire Hazard Classification

Material shall have a flame spread of 25 or less, and a smoke developed rating of 50 or less, when tested in accordance with ASTM E 84 or UL 723. Material shall be an approved firestopping material as listed in UL Fire Resist Dir or by a nationally recognized testing laboratory.

2.1.2 Toxicity

Material shall be nontoxic to humans at all stages of application.

2.1.3 Fire Resistance Rating

Firestopping will not be required to have a greater fire resistance rating than that of the assembly in which it is being placed.

2.1.3.1 Through-Penetrations

Firestopping materials for through-penetrations, as described in paragraph GENERAL REQUIREMENTS, shall provide "F" and "T" fire resistance ratings in accordance with ASTM E 814 or UL 1479, except that T Ratings are not required for penetrations smaller than or equal to a (4 inch) nominal pipe or (16 square inches) in overall cross sectional area. Fire resistance ratings shall be the following:

a. Penetrations of Fire Resistance Rated Walls and Partitions: F Rating = one hour, T Rating = one hour.

b. Penetrations of Fire Resistance Rated Floors and Ceiling-Floor Assemblies: F Rating = one hour, T Rating = one hour.

2.1.3.2 Construction Joints and Gaps

Fire resistance ratings of construction joints, as described in paragraph GENERAL REQUIREMENTS, and gaps such as those between floor slabs or roof decks and curtain walls shall be the same as the construction in which they occur. Construction joints and gaps shall be provided with firestopping materials and systems that have been tested per ASTM E 119 or UL 2079 to meet the required fire resistance rating.

PART 3 EXECUTION

3.1 PREPARATION

Areas to receive firestopping shall be free of dirt, grease, oil, or loose materials which may affect the fitting or fire resistance of the firestopping system.

3.2 INSTALLATION

Firestopping material shall completely fill void spaces regardless of geometric configuration, subject to tolerance established by the manufacturer. Firestopping for filling floor voids (4 inches) or more in any direction shall be capable of supporting the same load as the floor is designed to support or shall be protected by a permanent barrier to prevent loading or traffic in the firestopped area. Firestopping shall be installed in accordance with manufacturer's written instructions. Firestopping shall be provided in the following locations, except in floor slabs on grade:

a. Penetrations of duct, conduit, tubing, cable and pipe through floors and through fire-resistance rated walls, partitions, and ceiling-floor assemblies.

b. Penetrations of vertical shafts such as pipe chases, elevator shafts, and utility chutes.

c. Gaps at the intersection of floor slabs and curtain walls, including inside of hollow curtain walls at the floor slab.

d. Gaps at perimeter of fire-resistance rated walls and partitions, such as between the top of the walls and the bottom of roof decks.

e. Construction joints in floors and fire rated walls and partitions.

f. Other locations where required to maintain fire resistance rating of the construction.

3.3 INSPECTION

Firestopped areas shall not be covered or enclosed until inspection is complete and approved. A manufacturer's representative shall inspect the applications initially to ensure adequate preparations (clean surfaces suitable for application, etc.) and periodically during the work to assure that the completed work has been accomplished according to the manufacturer's written instructions and the specified requirements.

-- End of Section --

This page was intentionally left blank for duplex printing.

SECTION TABLE OF CONTENTS

DIVISION 07 - THERMAL & MOISTURE PROTECTION

SECTION 07900

JOINT SEALING

06/97

PART 1 GENERAL

1.1 REFERENCES
1.2 SUBMITTALS
1.3 ENVIRONMENTAL REQUIREMENTS
1.4 DELIVERY AND STORAGE

PART 2 PRODUCTS

2.1 BACKING
2.2 BOND-BREAKER
2.3 PRIMER
2.4 Not Used
2.5 SEALANT
2.5.1 LATEX
2.5.2 ELASTOMERIC
2.5.3 ACOUSTICAL
2.6 SOLVENTS AND CLEANING AGENTS
2.7 SEALANT COLOR

PART 3 EXECUTION

3.1 GENERAL
3.1.1 Surface Preparation
3.1.2 Concrete and Masonry Surfaces
3.1.3 Steel Surfaces
3.1.4 Aluminum Surfaces
3.1.5 Wood Surfaces
3.2 APPLICATION
3.2.1 Masking Tape
3.2.2 Backing
3.2.3 Bond-Breaker
3.2.4 Primer
3.2.5 Sealant
3.3 CLEANING

-- End of Section Table of Contents --

SECTION 07900

JOINT SEALING
06/97

PART 1 GENERAL

1.1 REFERENCES

The publications listed below form a part of this specification to the extent referenced. The publications are referred to in the text by basic designation only.

AMERICAN SOCIETY FOR TESTING AND MATERIALS (ASTM)

ASTM C 734	(1993) Low-Temperature Flexibility of Latex Sealants After Artificial Weathering
ASTM C 834	(1995) Latex Sealants
ASTM C 920	(1995) Elastomeric Joint Sealants
ASTM D 217	(1994) Cone Penetration of Lubricating Grease (IP50/88)
ASTM E 84	(1996a) Surface Burning Characteristics of Building Materials

1.2 SUBMITTALS

Government approval is required for submittals with a "G" designation; submittals not having a "G" designation are for information only. When used, a designation following the "G" designation identifies the office that will review the submittal for the Government. The following shall be submitted in accordance with Section 01330 SUBMITTAL PROCEDURES:

SD-03 Product Data

Sealant;

Manufacturer's descriptive data including storage requirements, shelf life, curing time, instructions for mixing and application, and primer data (if required). A copy of the Material Safety Data Sheet shall be provided for each solvent, primer or sealant material.

SD-07 Certificates

Sealant;

Certificates of compliance stating that the materials conform to the specified requirements.

1.3 ENVIRONMENTAL REQUIREMENTS

The ambient temperature shall be within the limits of(40 to 90 degrees F)

when the sealants are applied.

1.4 DELIVERY AND STORAGE

Materials shall be delivered to the job in the manufacturer's original unopened containers. The container label or accompanying data sheet shall include the following information as applicable: manufacturer, name of material, formula or specification number, lot number, color, date of manufacture, mixing instructions, shelf life, and curing time at the standard conditions for laboratory tests. Materials shall be handled and stored to prevent inclusion of foreign materials. Materials shall be stored at temperatures between 4 and 32 degrees C (40 and 90 degrees F) unless otherwise specified by the manufacturer.

PART 2 PRODUCTS

2.1 BACKING

Joint Backing shall be round foam rod compatible with sealant; ASTM D1056, open cell polyurethane sponge or expanded rubber ; oversized 30 to 50 percent larger than joint width. Backer shall be compatible with joint substrates, sealants, and primers.

2.2 BOND-BREAKER

Bond-breaker shall be as recommended by the sealant manufacturer to prevent adhesion of the sealant to backing or to bottom of the joint.

2.3 PRIMER

Primer shall be non-staining type as recommended by sealant manufacturer for the application.

2.4 Not Used

2.5 SEALANT

2.5.1 LATEX

Latex Sealant shall conform to ASTM C 834. Use: Interior surface for low movement, sound attenuation and paintable applications.

2.5.2 ELASTOMERIC

Elastomeric sealants shall conform to ASTM C 920 and the following:

a. Polysulfide Sealant: Type M, Grade NS, Class 25,
Use: Below grade on exterior for concrete and masonry .

b. Polyurethane sealant: Type M or S, Grade NS, Class 25,
Use: Exterior brick, metal, concrete and glass.

c. Silicone sealant: Type S, Grade NS, Class 25,
Use:Interior sanitary surfaces, counters, fixtures.

2.5.3 ACOUSTICAL

(S-5) Rubber or polymer-based acoustical sealant shall have a flame spread

of 25 or less and a smoke developed rating of 50 or less when tested in accordance with ASTM E 84. Acoustical sealant shall have a consistency of 250 to 310 when tested in accordance with ASTM D 217, and shall remain flexible and adhesive after 500 hours of accelerated weathering as specified in ASTM C 734, and shall be non-staining. For use at common walls between guest rooms and between guest rooms and corridors.

2.6 SOLVENTS AND CLEANING AGENTS

Solvents, cleaning agents, and accessory materials shall be provided as recommended by the manufacturer.

2.7 SEALANT COLOR

Sealant colors shall match adjacent surfaces in accordance with Section 09915 COLOR SCHEDULE, Paragraph 2.2.2j.

PART 3 EXECUTION

3.1 GENERAL

3.1.1 Surface Preparation

The surfaces of joints to receive sealant or caulk shall be free of all frost, condensation and moisture. Oil, grease, dirt, chalk, particles of mortar, dust, loose rust, loose mill scale, and other foreign substances shall be removed from surfaces of joints to be in contact with the sealant. Oil and grease shall be removed with solvent and surfaces shall be wiped dry with clean cloths. For surface types not listed below, the sealant manufacturer shall be contacted for specific recommendations.

3.1.2 Concrete and Masonry Surfaces

Where surfaces have been treated with curing compounds, oil, or other such materials, the materials shall be removed by sandblasting or wire brushing. Laitance, efflorescence and loose mortar shall be removed from the joint cavity.

3.1.3 Steel Surfaces

Steel surfaces to be in contact with sealant shall be sandblasted or, if sandblasting would not be practical or would damage adjacent finish work, the metal shall be scraped and wire brushed to remove loose mill scale. Protective coatings on steel surfaces shall be removed by sandblasting or by a solvent that leaves no residue.

3.1.4 Aluminum Surfaces

Aluminum surfaces to be in contact with sealants shall be cleaned of temporary protective coatings. When masking tape is used for a protective cover, the tape and any residual adhesive shall be removed just prior to applying the sealant. Solvents used to remove protective coating shall be as recommended by the manufacturer of the aluminum work and shall be non-staining.

3.1.5 Wood Surfaces

Wood surfaces to be in contact with sealants shall be free of splinters and sawdust or other loose particles.

3.2 APPLICATION

3.2.1 Masking Tape

Masking tape may be placed on the finish surface on one or both sides of a joint cavity to protect adjacent finish surfaces from primer or sealant smears. Masking tape shall be removed within 10 minutes after joint has been filled and tooled.

3.2.2 Backing

Backing shall be installed to provide the indicated sealant depth. The installation tool shall be shaped to avoid puncturing the backing.

3.2.3 Bond-Breaker

Bond-breaker shall be applied to fully cover the bottom of the joint without contaminating the sides where sealant adhesion is required.

3.2.4 Primer

Primer shall be used on concrete masonry units, wood, or other porous surfaces in accordance with instructions furnished with the sealant. Primer shall be applied to the joint surfaces to be sealed. Surfaces adjacent to joints shall not be primed.

3.2.5 Sealant

Sealant shall be used before expiration of shelf life. Multi-component sealants shall be mixed according to manufacturer's printed instructions. Sealant in guns shall be applied with a nozzle of proper size to fit the width of joint. Joints shall be sealed as detailed in the drawings. Sealant shall be forced into joints with sufficient pressure to expel air and fill the groove solidly. Sealant shall be installed to the indicated depth without displacing the backing. Unless otherwise indicated, specified, or recommended by the manufacturer, the installed sealant shall be dry tooled to produce a uniformly smooth surface free of wrinkles and to ensure full adhesion to the sides of the joint; the use of solvents, soapy water, etc., will not be allowed. Sealants shall be installed free of air pockets, foreign embedded matter, ridges and sags. Sealer shall be applied over the sealant when and as specified by the sealant manufacturer.

3.3 CLEANING

The surfaces adjoining the sealed joints shall be cleaned of smears and other soiling resulting from the sealant application as work progresses.

-- End of Section --

This page was intentionally left blank for duplex printing.

SECTION TABLE OF CONTENTS

DIVISION 08 - DOORS & WINDOWS

SECTION 08110

STEEL DOORS AND FRAMES

02/95

PART 1 GENERAL

1.1 REFERENCES
1.2 SUBMITTALS
1.3 DELIVERY AND STORAGE
1.4 WARRANTY

PART 2 PRODUCTS

2.1 DOORS AND FRAMES
2.2 FIRE RATED DOORS
2.3 Not Used
2.4 WEATHERSTRIPPING
2.5 Not Used
2.6 FACTORY FINISH

PART 3 EXECUTION

3.1 INSTALLATION
3.1.1 Thermal Insulated Doors
3.2 FIELD PAINTED FINISH

-- End of Section Table of Contents --

SECTION 08110

STEEL DOORS AND FRAMES
02/95

PART 1 GENERAL

1.1 REFERENCES

The publications listed below form a part of this specification to the extent referenced. The publications are referred to in the text by basic designation only.

AMERICAN SOCIETY FOR TESTING AND MATERIALS (ASTM)

ASTM E 283	(1991) Determining the Rate of Air Leakage Through Exterior Windows, Curtain Walls, and Doors Under Specified Pressure Differences Across the Specimen

DOOR AND HARDWARE INSTITUTE (DHI)

DHI A115.1G	(1994) Installation Guide for Doors and Hardware

NATIONAL FIRE PROTECTION ASSOCIATION (NFPA)

NFPA 80	(1995) Fire Doors and Windows
NFPA 80A	(1993) Protection of Buildings from Exterior Fire Exposures
NFPA 101	(1997) Safety to Life from Fire in Buildings and Structures
NFPA 252	(1995) Fire Tests of Door Assemblies

STEEL DOOR INSTITUTE (SDOI)

SDOI SDI-100	(1991) Standard Steel Doors and Frames
SDOI SDI-106	(1996) Standard Door Type Nomenclature
SDOI SDI-107	(1984) Hardware on Steel Doors (Reinforcement - Application)

1.2 SUBMITTALS

Government approval is required for submittals with a "G" designation; submittals not having a "G" designation are for information only. When used, a designation following the "G" designation identifies the office that will review the submittal for the Government. The following shall be submitted in accordance with Section 01330 SUBMITTAL PROCEDURES:

SD-02 Shop Drawings

Steel Doors and Frames; G-AE

Drawings using standard door type nomenclature in accordance with SDOI SDI-106 indicating the location of each door and frame, elevation of each model of door and frame, details of construction, method of assembling sections, location and extent of hardware reinforcement, hardware locations, type and location of anchors for frames, and thicknesses of metal. Drawings shall include catalog cuts or descriptive data for the doors, frames, and weatherstripping including air infiltration data and manufacturers printed instructions.

SD-06 Test Reports

Fire Rated Doors;

A letter by a nationally recognized testing laboratory which identifies the product manufacturer, type, and model; certifying that the laboratory has tested a sample assembly in accordance with NFPA 252 and issued a current listing for same.

1.3 DELIVERY AND STORAGE

During shipment, welded unit type frames shall be strapped together in pairs with heads at opposite ends or shall be provided with temporary steel spreaders at the bottom of each frame; and knockdown type frames shall be securely strapped in bundles. Materials shall be delivered to the site in undamaged condition, and stored out of contact with the ground and under a weathertight covering permitting air circulation. Doors and assembled frames shall be stored in an upright position in accordance with DHI A115.1G. Abraded, scarred, or rusty areas shall be cleaned and touched up with matching finishes.

1.4 WARRANTY

Manufacturer's standard performance guarantees or warranties that extend beyond a 1 year period shall be provided.

PART 2 PRODUCTS

2.1 DOORS AND FRAMES

Doors and frames shall be factory fabricated in accordance with SDOI SDI-100 and the additional requirements specified herein. Door grade shall be heavy duty (Grade II) for interior doors and extra heavy duty (Grade III) for exterior doors unless otherwise indicated on the door and door frame schedules. Exterior doors and frames shall be designation G60 galvanized. Doors and frames shall be prepared to receive hardware conforming to the templates and information provided under Section 08700 BUILDERS' HARDWARE. Doors and frames shall be reinforced, drilled, and tapped to receive mortised hinges, locks, latches, and flush bolts as required. Doors and frames shall be reinforced for surface applied hardware. Frames shall be welded type located as shown. Door frames shall be furnished with a minimum of three jamb anchors and one floor anchor per jamb. Anchors shall be not less than steel or diameter wire. For wall conditions that do not allow the use of a floor anchor, an additional jamb anchor shall be provided. Rubber silencers shall be furnished for installation into factory

predrilled holes in door frames; adhesively applied silencers are not acceptable. Where frames are installed in plaster or masonry walls, plaster guards shall be provided on door frames at hinges and strikes. Reinforcing of door assemblies for closers and other required hardware shall be in accordance with SDOI SDI-100and the conditions of the fire door assembly listing when applicable. Exterior doors shall have top edges closed flush and sealed against water penetration. Door frames at exterior door locations shall be grouted solid.

2.2 FIRE RATED DOORS

Fire rated door assemblies shall bear the listing identification label of a nationally recognized testing laboratory qualified to perform tests of fire door assemblies in accordance with NFPA 252 and having a listing for the tested assemblies. The fire resistance rating shall be as shown. Doors exceeding the sizes for which listing label service is offered shall be in accordance with NFPA 252. Listing identification labels shall be constructed and permanently applied by a method which results in their destruction should they be removed.

2.3 Not Used

2.4 WEATHERSTRIPPING

Unless otherwise specified in Section 08700 BUILDERS' HARDWARE, weatherstripping shall be as follows: Weatherstripping for head and jamb shall be manufacturer's standard elastomeric type of synthetic rubber, vinyl, or neoprene and shall be installed at the factory or on the jobsite in accordance with the door frame manufacturer's recommendations. Weatherstripping for bottom of doors shall be as shown. Air leakage rate of weatherstripping shall not exceed of crack when tested in accordance with ASTM E 283 at standard test conditions.

2.5 Not Used

2.6 FACTORY FINISH

Doors and frames shall be phosphatized, and primed with standard factory primer system.

PART 3 EXECUTION

3.1 INSTALLATION

Installation shall be in accordance with DHI A115.1G. Preparation for surface applied hardware shall be in accordance with SDOI SDI-107. Rubber silencers shall be installed in door frames after finish painting has been completed; adhesively applied silencers are not acceptable. Weatherstripping shall be installed at exterior door openings to provide a weathertight installation. Installation and operational characteristics of fire doors shall be in accordance with NFPA 80, NFPA 80A and NFPA 101. Hollow metal door frames shall be solid grouted in masonry walls.

3.1.1 Thermal Insulated Doors

Hardware and perimeter seals shall be adjusted for proper operation. Doors shall be sealed weathertight after installation of hardware and shall be in accordance with Section 07900 JOINT SEALING.

3.2 FIELD PAINTED FINISH

Steel doors and frames shall be field painted in accordance with Section 09900 PAINTING, GENERAL. Weatherstrips shall be protected from paint. Finish shall be free of scratches or other blemishes. Color shall be in accordance with Section 09915 COLOR SCHEDULE.

-- End of Section --

This page was intentionally left blank for duplex printing.

SECTION TABLE OF CONTENTS

DIVISION 08 - DOORS & WINDOWS

SECTION 08120

ALUMINUM STOREFRONT AND ENTRANCES

07/98

PART 1 GENERAL

1.1 REFERENCES
1.2 SYSTEM DESCRIPTION
1.3 PERFORMANCE REQUIREMENTS
1.3.1 Wind Load Performance
1.3.2 Water Penetration Performance
1.3.3 Air Infiltration Performance
1.3.4 Thermal Performance
1.4 SUBMITTALS
1.5 DELIVERY AND STORAGE
1.6 WARRANTY

PART 2 PRODUCTS

2.1 ALUMINUM DOORS AND FRAMES
2.1.1 Finishes
2.1.2 Welding and Fastening
2.1.3 Anchors
2.1.4 Hardware
2.1.5 Glazing
2.1.6 Weatherstripping
2.2 ALUMINUM WINDOW WALL FRAMES
2.2.1 Storefront Framing
2.2.2 Curtainwall Framing
2.2.3 Thermal Barrier
2.2.4 Sills
2.3 ALUMINUM DOORS
2.3.1 Not Used
2.3.2 Thermally Clad, Full-Glazed Stile and Rail Doors
2.3.3 Door Hardware
2.3.3.1 Not Used
2.3.3.2 Hardware Set for Door No. 1159
2.3.3.3 Hardware To Be Provided and Installed by Aluminum Door Supplier
2.3.3.4 Hardware To Be Provided and Installed By Tesa Entry Systems, Inc.

PART 3 EXECUTION

3.1 INSTALLATION OF DOORS, FRAMES, AND ACCESSORIES
3.1.1 Protection of Aluminum
3.1.1.1 Paint
3.1.1.2 Non absorptive Tape or Gasket
3.1.2 Installation
3.1.3 Cleaning

-- End of Section Table of Contents --

SECTION 08120

ALUMINUM STOREFRONT AND ENTRANCES
07/98

PART 1 GENERAL

1.1 REFERENCES

The publications listed below form a part of this specification to the extent referenced. The publications are referred to in the text by basic designation only.

AMERICAN ARCHITECTURAL MANUFACTURERS ASSOCIATION (AAMA)

AAMA 1503.1	(1988) Voluntary Test Method for Thermal Transmittance and Condensation Resistance of Windows, Doors and Glazed Wall Sections

AMERICAN SOCIETY FOR TESTING AND MATERIALS (ASTM)

ASTM E 283	(1991) Determining the Rate of Air Leakage Through Exterior Windows, Curtain Walls, and Doors Under Specified Pressure Differences Across the Specimen
ASTM E 330	(1990) Structural Performance of Exterior Windows, Curtain Walls, and Doors by Uniform Static Air Pressure Difference
ASTM E 331	(1996) Water Penetration of Exterior Windows, Curtain Walls, and Doors by Uniform Static Air Pressure Difference

1.2 SYSTEM DESCRIPTION

Thermally broken, aluminum window wall framing system, with swing-type aluminum doors, of size and design shown on the drawings, shall be provided at the locations indicated. Storefront system shall be furnished complete with framing, doors, subframes, trim, and other accessories indicated, specified, or required for a complete installation.

1.3 PERFORMANCE REQUIREMENTS

1.3.1 Wind Load Performance

Doors and frames shall be of sufficient strength to withstand a design wind load of of supported area with a deflection of not more than 1/175 times the length of the member. Doors shall be tested in accordance with ASTM E 330 at a pressure not less than 1.5 times the design load.

1.3.2 Water Penetration Performance

Frames, fixed areas, and non-handicap complying doors shall have no water penetration when tested in accordance with ASTM E 331 with a test pressure of.

1.3.3 Air Infiltration Performance

Frames and fixed assemblies shall limit air infiltration to .0003 cu m/sq. m. (0.06 cfm/sq. ft.) of assembly surface area, measured at a reference differential pressure across assembly of 300 Pa (6.24 lbs./sq. ft.) in accordance with ASTM E 283.

1.3.4 Thermal Performance

Thermal performance when tested in accordance with AAMA 1503.1, shall have a maximum U-value of .58 and a minimum condensation resistance factor (crf) of 60.

1.4 SUBMITTALS

Government approval is required for submittals with a "G" designation; submittals not having a "G" designation are for information only. When used, a designation following the "G" designation identifies the office that will review the submittal for the Government. The following shall be submitted in accordance with Section 01330 SUBMITTAL PROCEDURES:

SD-02 Shop Drawings

Aluminum Frames and Doors; G-AO.

Drawings showing the locations of each window wall system component shall be included with the drawings. Drawings shall show elevations of each frame type, component dimensions, details and method of anchorage, details of construction, location and installation of door hardware, shape and thickness of materials, and details of joints and connections.

SD-03 Product Data

Aluminum Frames and Doors;

Manufacturer's descriptive data and catalog cuts including test reports verifying compliance with performance criteria.

SD-04 Samples

Finishes; G-AE

Three samples of the anodized coating, showing the extreme color range.

SD-06 Test Reports

Aluminum Doors;

For full-glazed doors, certified test reports from an independent testing laboratory, stating that doors are identical in design, materials, and construction to a door that has been tested and meets all test and specified requirements.

SD-07 Certificates

Installer Qualifications;

Manufacturer's certification that installer is qualified and trained to install the specified aluminum storefront framing system. Evidence that installer has a minimum of five years of experience on installations of a similar size and scope.

SD-08 Manufacturer's Instructions

Installation;
Cleaning;

Manufacturer's installation instructions and cleaning instructions.

1.5 DELIVERY AND STORAGE

Materials delivered to the jobsite shall be inspected for damage, and shall be unloaded with a minimum of handling. Storage shall be in a dry location with adequate ventilation, free from dust, water, and other contaminants, and which permits easy access for inspecting and handling. Materials shall be neatly stored on the floor, properly stacked on nonabsorptive strips or wood platforms. Doors and frames shall not be covered with tarps, polyethylene film, or similar coverings.

1.6 WARRANTY

Manufacturer's three year warranty or performance guarantee to cover complete system for failure to meet specified requirements shall be provided.

PART 2 PRODUCTS

2.1 ALUMINUM DOORS AND FRAMES

Extrusions shall comply with ASTM B 221, Alloy 6063-T5, except alloy used for anodized color coatings shall be required to produce the specified color. Aluminum sheets and strips shall comply with ASTM B 209, alloy and temper best suited for the purpose. Fasteners shall be hard aluminum or stainless steel.

2.1.1 Finishes

Finish shall be clear anodized. Clear anodized finish shall be in accordance with AA-M10C22A41.

2.1.2 Welding and Fastening

Where possible, welds shall be located on unexposed surfaces. Welds required on exposed surfaces shall be smoothly dressed. Welding shall produce a uniform texture and color in the finished work, free of flux and spatter. Exposed screws or bolts will be permitted only at inconspicuous locations and shall have heads countersunk.

2.1.3 Anchors

Anchors shall be stainless steel or steel with a hot-dipped galvanized finish. Anchors of the sizes and shapes required shall be provided for securing aluminum frames to adjacent construction. Anchors shall be placed near top and bottom of each jamb and at intermediate points not more than

apart. Transom bars shall be anchored at ends, and mullions shall be anchored at head and sill. Where indicated on the drawings, vertical mullion reinforcement shall be of sufficient length to extend up to the overhead structural slab or framing and be securely attached thereto. Where indicated on the drawings, the bottom of each frame shall be anchored to the rough floor construction with thick stainless steel angle clips secured to the back of each jamb and to floor construction. Stainless steel bolts and expansion rivets shall be used for fastening clip anchors.

2.1.4 Hardware

Hardware sets for aluminum doors are described in ALUMINUM DOORS below. Doors and frames shall be cut, reinforced, drilled, and tapped at the factory to receive template hardware. Reinforcement shall be provided in the core of doors as required to receive locks, door closers, and other hardware. Doors to receive surface applied hardware shall be reinforced as required.

2.1.5 Glazing

Glazing shall be Low-E Insulating Glass as specified in Section 08810 GLASS AND GLAZING. Metal glazing beads, vinyl inserts, and glazing gaskets shall be provided for securing glass. Glass stops shall be tamperproof on exterior side.

2.1.6 Weatherstripping

Weatherstripping shall be continuous silicone-treated wool pile type, or a type recommended by the door manufacturer and shall be provided on head and jamb of exterior door frames. Air leakage rate of weatherstripping shall not exceed 0.5 cubic feet per minute per lineal foot of crack when tested in accordance with ASTM E 283 at standard test conditions.

2.2 ALUMINUM WINDOW WALL FRAMES

The window wall frames shall be thermally broken, and shall accommodate 25 mm (1 inch) thick insulating glass. Frames shall be fabricated of extruded aluminum shapes to contours as shown on the drawings. Shapes shown are representations of design, function, and required profile. Minimum metal wall thickness shall be except glazing beads, moldings, and trim shall be not less than Frames that are to receive glass shall have removable snap-on glass stops and glazing beads. Joints in frame members shall be milled to a hairline tight fit so that raw edges of the assembly are not visible, sealed internally to prevent water infiltration, reinforced, and secured mechanically by appropriate screws or by screw spline attachment.

2.2.1 Storefront Framing

Storefront window frames shall be 50 x 114 mm (2 x 4-1/2 inches) nominal dimension with glass units centered in the frame. The framing system shall have flush glazing stops, an internal weep drainage system and be exterior glazed.

2.2.2 Curtainwall Framing

Curtainwall frames shall be self-supporting, with pressure plate and covers attached to the tongue of back member. Frame size shall be 63 x 160mm (2-1/2 x 6 inches), unless noted otherwise on the Drawings, with glass units supported at the exterior of the system.

2.2.3 Thermal Barrier

Thermal barrier shall consist of a two-part, chemically curing, high density polyurethane which is mechanically and adhesively bonded to the aluminum.

2.2.4 Sills

Sills shall be fabricated from minimum 1.27mm (.050 inch) thick aluminum with finish to match storefront and curtainwall systems. Sill profiles and sizes shall be as shown on Drawings. Provide separate concealed keeper strip for securing exposed face of sill in place.

2.3 ALUMINUM DOORS

Doors shall be not less than 44.4mm (1-3/4 inches)thick. Clearances at hinge stiles, lock stiles and top rails, floors and thresholds, shall comply with manufacturer's standard. Single-acting doors shall be beveled at lock and meeting stile edges.

2.3.1 Not Used

2.3.2 Thermally Clad, Full-Glazed Stile and Rail Doors

Door No. 1159 shall be thermally improved, with 88 mm (3-1/2 inch) wide medium stiles and rails, and shall be fabricated from extruded aluminum hollow seamless tubes 44.5 mm (1-3/4 inches) in depth with a nominal wall thickness of 3.2 mm (1/8 inch). Door corners shall be joined using mechanical clip fasteners and penetration welds at four weld points per corner. Thermal separators for door cladding shall be rigid polyvinylchloride (PVC) extrusions. Alluminum cladding shall be interlocked with PVC separators at both edges and mechanically secured to door without adhesives. Frames shall be prepared with internal reinforcement for door hardware and door operator hinge hardware. Door framing shall have a glass pocket depth of 19 mm (3/4 inch) and shall provide for a flush glazing appearance with no projecting stops. Doors shall be double-glazed. Extruded aluminum snap-in glazing beads shall be provided on interior side of doors. Extruded aluminum theft-proof snap-in glazing beads or fixed glazing beads shall be provided on exterior or security side of doors. Glass is specified in Section 08810 GLASS AND GLAZING.

2.3.3 Door Hardware

Additional specification requirements for the hardware components listed below are described in 08700 BUILDERS HARDWARE.

2.3.3.1 Not Used

2.3.3.2 Hardware Set for Door No. 1159

Door Operation: From the exterior, the door is to be locked with a maglock, and access allowed via the use of a keycard in a Tesa cardreader. When the door maglock is released by the cardreader, the door shall be openable manually. From the interior side, depressing the push bar of the exit device shall release the maglock and open the door without requiring any further special action

NOTE: Aluminum door supplier is responsible for coordinating the

installation and interface of all the below listed aluminum door hardware (including components provided and installed by Tesa) to ensure the door assembly is complete and functions properly.

2.3.3.3 Hardware To Be Provided and Installed by Aluminum Door Supplier

3 pr. Hinges with flat button tips; finish 629 (US32).

1 ea. Pull: Equal to Hiawatha 535B, 25 (1 inch) diameter, US 28 finish.

1 ea. Closer; heavy duty, surface mounted with 90 degree back check with integral stop (no hold open); sprayed aluminum finish..

1 ea. Threshold; full saddle at all other conditions.

1 ea. Weatherstripping; manufacturer's standard system.

2.3.3.4 Hardware To Be Provided and Installed By Tesa Entry Systems, Inc.

1 ea. Tesa electronic card reader and accessories required to rate it for extreme temperatures and outdoor application.

1 ea. Maglock compatible with cardreader and aluminum door and frame.

1 ea. Exit device: Rim style touch bar device less outside trim plate. Exit device to be equivalent to Adams Rite 8099M1.

1 ea. 12 VDC Power Supply with battery back-up

1 ea. Door Loop

PART 3 EXECUTION

3.1 INSTALLATION OF DOORS, FRAMES, AND ACCESSORIES

3.1.1 Protection of Aluminum

Aluminum shall not be used where it will be in contact with copper or where it will contact water which flows over copper surfaces. Aluminum that will be in contact with wet or pressure-treated wood, mortar, concrete, masonry, or ferrous metals shall be protected against galvanic or corrosive action by one of the following methods.

3.1.1.1 Paint

Aluminum surfaces to be protected shall be solvent cleaned and given a coat of zinc-molybdate primer and one coat of aluminum paint.

3.1.1.2 Non absorptive Tape or Gasket

Non absorptive tape or gasket shall be placed between the adjoining surfaces and shall be cemented to the aluminum surface using a cement compatible with aluminum.

3.1.2 Installation

Frames and framing members shall be accurately set in position to receive adjoining components. Frames shall be plumb, square, level, and in alignment, and securely anchored to adjacent construction. Metal-to-metal

joints between framing members and joints between framing members and building surfaces shall be sealed as specified in Section 07900 JOINT SEALING. Doors shall be accurately hung with proper clearances, and adjusted to operate properly.

3.1.3 Cleaning

Doors and frames shall be cleaned in accordance with the manufacturer's approved instructions.

-- End of Section --

This page was intentionally left blank for duplex printing.

SECTION TABLE OF CONTENTS

DIVISION 08 - DOORS & WINDOWS

SECTION 08210

WOOD DOORS

05/97

PART 1 GENERAL

1.1 REFERENCES
1.2 GENERAL REQUIREMENTS
1.2.1 Standard Products
1.2.2 Marking
1.3 SUBMITTALS
1.4 STORAGE
1.5 HARDWARE
1.6 Not Used
1.7 WARRANTY

PART 2 PRODUCTS

2.1 GENERAL FABRICATION REQUIREMENTS
2.1.1 Edge Sealing
2.1.2 Not Used
2.1.3 Adhesives
2.1.4 Prefitting
2.2 FLUSH DOORS
2.2.1 Core Construction
2.2.1.1 Solid Cores
2.2.2 Face Panels
2.2.2.1 Natural Finished Wood Veneer Doors
2.2.2.2 Painted Wood Veneer Doors
2.3 Not Used
2.4 FIRE RATED DOORS
2.4.1 Reinforcement Blocking
2.4.2 Stile Edges
2.5 MOULDING AND EDGING
2.6 Not Used
2.7 Not Used
2.8 FINISHING
2.8.1 Factory Coated Natural Finish
2.8.2 Factory Coated Paint Finish

PART 3 EXECUTION

3.1 INSTALLATION OF DOORS
3.1.1 General Use Doors
3.1.2 Fire Doors

-- End of Section Table of Contents --

SECTION 08210

WOOD DOORS
05/97

PART 1 GENERAL

1.1 REFERENCES

The publications listed below form a part of this specification to the extent referenced. The publications are referred to in the text by basic designation only.

ARCHITECTURAL WOODWORK INSTITUTE (AWI)

AWI-02	(1994) Architectural Woodwork Quality Standards, Guide Specifications and Quality Certification Program

NATIONAL FIRE PROTECTION ASSOCIATION (NFPA)

NFPA 80	(1995) Fire Doors and Windows
NFPA 101	(1997) Safety to Life from Fire in Buildings and Structures
NFPA 252	(1995) Fire Tests of Door Assemblies

NATIONAL WOOD WINDOW & DOOR ASSOCIATION (NWWDA)

NWWDA I.S. 1-A	(1993) Architectural Wood Flush Doors

1.2 GENERAL REQUIREMENTS

1.2.1 Standard Products

Doors shall be of the type, size, and design indicated on the drawings, and shall be the standard products of manufacturers regularly engaged in the manufacture of wood doors.

1.2.2 Marking

Each door shall bear a stamp, brand, or other identifying mark indicating quality and construction of the door. The identifying mark or a separate certification shall include identification of the standard on which construction of the door is based, identity of the manufacturing plant, identification of the standard under which preservative treatment, if used, was made, and identification of the doors having a Type I glue bond.

1.3 SUBMITTALS

Government approval is required for submittals with a "G" designation; submittals not having a "G" designation are for information only. When used, a designation following the "G" designation identifies the office that will review the submittal for the Government. The following shall be

submitted in accordance with Section 01330 SUBMITTAL PROCEDURES:

SD-02 Shop Drawings

Wood Doors; G-AE

Drawings indicating the location of each door, elevation of each type of door, details of construction, marks to be used to identify the doors, and location and extent of hardware blocking. Drawings shall include catalog cuts or descriptive data for doors, to be used.

SD-04 Samples

Factory Stained and Coated Finish; G-AE

Seven samples of factory applied stained and painted finishes on wood samples with specified veneers. Samples to be 200 x 200 mm (8 x 8 inches) in size.

1.4 STORAGE

Doors shall be stored in fully covered areas and protected from damage and from extremes in temperature and humidity. Doors shall be stored on supports to prevent warping or twisting, and to provide ventilation. Factory cartons or wrappers shall be kept intact until installation.

1.5 HARDWARE

Hardware, including weatherstripping and thresholds, is specified in Section 08700 BUILDERS' HARDWARE.

1.6 Not Used

1.7 WARRANTY

Manufacturer's standard performance guarantees or warranties that extend beyond a 1 year period shall be provided.

PART 2 PRODUCTS

2.1 GENERAL FABRICATION REQUIREMENTS

2.1.1 Edge Sealing

Wood end-grain exposed at edges of doors shall be sealed prior to shipment.

2.1.2 Not Used

2.1.3 Adhesives

Adhesives shall be in accordance with NWWDA I.S. 1-A, for Type II Bond Doors (water-repellent) for interior doors. Adhesive for doors to receive a transparent finish shall be nonstaining. Adhesives shall contain no formaldehydes.

2.1.4 Prefitting

Doors shall be furnished prefitted or unfitted at the option of the

Contractor.

2.2 FLUSH DOORS

Flush doors shall be solid core and shall conform to NWWDA I.S. 1-A, except for the one year acclimatization requirement in paragraph T-2, which shall not apply. Wood doors shall be 5-ply construction with faces, stiles, and rails bonded to the cores.

2.2.1 Core Construction

2.2.1.1 Solid Cores

Door construction shall be bonded particle board core or mineral core with vertical and horizontal edges bonded to the core.

2.2.2 Face Panels

2.2.2.1 Natural Finished Wood Veneer Doors

Veneer doors to receive stained natural finish shall be Premium Grade, book matched, Rotary Select White Birch veneer in accordance with NWWDA I.S. 1-A. Vertical stile strips shall be selected to provide edges of the same species and color as the face veneer. Door finish shall be in accordance with paragraph FINISHING.

2.2.2.2 Painted Wood Veneer Doors

Veneer doors to receive paint finish shall be Economy Grade with medium density overlay veneer in accordance with NWWDA I.S. 1-A. Door finish shall be in accordance with paragraph FINISHING.

2.3 Not Used

2.4 FIRE RATED DOORS

Fire rated door assemblies shall bear the listing identification label of a nationally recognized testing laboratory qualified to perform tests of fire door assemblies in accordance with NFPA 252 and having a listing for the tested assemblies. The specific time interval rating on the labels shall be as shown. Door assemblies shall be in accordance with NFPA 80. Listing identification on labels shall be constructed and permanently applied by a method which results in their destruction should they be removed. Fire rated doors shall be mineral core with 60 or 90 minute ratings or particleboard core with 20 minute rating, as located on drawings.

2.4.1 Reinforcement Blocking

Fire rated doors shall be provided, as required, with hardware reinforcement blocking, and top, bottom, and intermediate rail blocking. Lock blocks shall be manufacturer's standard. Reinforcement blocking shall be in compliance with the manufacturer's labeling requirements. Reinforcement blocking shall not be of mineral material.

2.4.2 Stile Edges

Composite fire rated doors shall be provided with vertical stile edges that do not contain fire retardant salts. Vertical stiles shall be of the same species and/or color as the face veneer.

2.5 MOULDING AND EDGING

Moulding and edging shall be as shown. Wood species for transparent finished doors shall be compatible with veneer.

2.6 Not Used

2.7 Not Used

2.8 FINISHING

2.8.1 Factory Coated Natural Finish

Natural finished wood veneer doors indicated to receive a stained and coated natural finish, shall be given a factory applied transparent finish conforming to AWI-02, Section 1500, Premium Grade, dark stain, satin sheen, and close grain effect. Finish shall meet or exceed performance standards of AWI factory finish system Number TR6 (catalyzed polyurethane). Color of the natural finish shall be in accordance with Section 09915 COLOR SCHEDULE . Edges of unfitted doors shall be field finished after fitting to the frames.

2.8.2 Factory Coated Paint Finish

Painted wood veneer doors indicated to receive a painted finish shall be given a factory applied opaque finish conforming to AWI-02, Section 1500, system number OP-6 (catalyzed polyurethane)]. Color of factory coated paint finish shall be in accordance with Section 09915 COLOR SCHEDULE.

PART 3 EXECUTION

3.1 INSTALLATION OF DOORS

3.1.1 General Use Doors

Doors shall be fit, hung, and trimmed as required. Door shall have a clearance of (1/8 inch) at the sides and top and shall have a bottom clearance of (1/4 inch) over thresholds and (1/2 inch) at other locations unless otherwise shown on door schedule. The lock edge or both edges of doors shall be beveled at the rate of (1/8 inch) in (2 inches). Cuts made on the job shall be sealed immediately after cutting, using a clear varnish or sealer. Bottom of doors shall be undercut to allow clear door swing over carpeted areas. Vertical edges of doors which have not been rounded or beveled at the factory shall be eased when the doors are installed.

3.1.2 Fire Doors

Installation, hardware, and operational characteristics shall conform to NFPA 80 and NFPA 101 and shall be in strict conformance with the manufacturer's printed instructions. Properly sized pilot holes shall be drilled for screws in door edges. Factory applied labels shall remain intact where installed. Labeled hinge stile edge and top edge of door shall not be trimmed. Lockstile edge and bottom edge may be trimmed only to the extent recommended by the door manufacturer.

-- End of Section --

This page was intentionally left blank for duplex printing.

SECTION TABLE OF CONTENTS

DIVISION 08 - DOORS & WINDOWS

SECTION 08520

ALUMINUM WINDOWS

08/98

PART 1 GENERAL

1.1 REFERENCES
1.2 WINDOW PERFORMANCE
1.2.1 Structural Performance
1.2.2 Air Infiltration
1.2.3 Water Penetration
1.2.4 Thermal Performance
1.2.5 Life Safety Criteria
1.2.6 Life Cycle Testing
1.2.7 Condensation Resistance
1.3 SUBMITTALS
1.4 QUALIFICATION
1.5 MOCK-UPS
1.6 DELIVERY AND STORAGE
1.7 WARRANTY

PART 2 PRODUCTS

2.1 ALUMINUM WINDOW TYPES
2.1.1 Fixed Windows
2.1.2 Horizontal-Sliding Windows
2.2 WEATHERSTRIPPING
2.3 INSECT SCREENS
2.4 ACCESSORIES
2.4.1 Fasteners
2.4.2 Hardware
2.4.3 Window Anchors
2.4.4 Sub Frames and Trim
2.5 GLASS AND GLAZING
2.6 FINISH
2.6.1 Anodized Aluminum Finish
2.6.2 Not Used
2.6.3 Not Used
2.6.4 Color

PART 3 EXECUTION

3.1 INSTALLATION
3.2 ADJUSTMENTS AND CLEANING
3.2.1 Hardware Adjustments
3.2.2 Cleaning

-- End of Section Table of Contents --

SECTION 08520

ALUMINUM WINDOWS
08/98

PART 1 GENERAL

1.1 REFERENCES

The publications listed below form a part of this specification to the extent referenced. The publications are referred to in the text by basic designation only.

ALUMINUM ASSOCIATION (AA)

AA DAF-45	(1980; R 1993) Designation System for Aluminum Finishes

AMERICAN ARCHITECTURAL MANUFACTURERS ASSOCIATION (AAMA)

AAMA AAMA/NWWDA 101 I.S.2	(1997) Voluntary Specifications for Aluminum, Vinyl (PVC) and Wood Windows and Glass Doors
AAMA 910	(1993) Voluntary Test for Life Cycle Testing of Windows and Doors
AAMA 1503.1	(1988) Voluntary Test Method for Thermal Transmittance and Condensation Resistance of Windows, Doors and Glazed Wall Sections

AMERICAN SOCIETY FOR TESTING AND MATERIALS (ASTM)

ASTM E 283	(1991) Determining the Rate of Air Leakage Through Exterior Windows, Curtain Walls, and Doors Under Specified Pressure Differences Across the Specimen
ASTM E 330	(1990) Structural Performance of Exterior Windows, Curtain Walls, and Doors by Uniform Static Air Pressure Difference
ASTM E 547	(1996) Water Penetration of Exterior Windows, Curtain Walls, and Doors by Cyclic Static Air Pressure Differential

INSECT SCREENING WEAVERS ASSOCIATION (ISWA)

ISWA IWS 089	(1990) Recommended Standards and Specifications for Insect Wire Screening (Wire Fabric)

NATIONAL FIRE PROTECTION ASSOCIATION (NFPA)

NFPA 101	(1997; Errata 97-1) Life Safety Code

SCREEN MANUFACTURERS ASSOCIATION (SMA)

SMA ANSI/SMA 1004	(1987) Aluminum Tubular Frame Screens for Windows

1.2 WINDOW PERFORMANCE

Aluminum windows shall be designed to meet or exceed AAMA 101 HS-AW40 type performance requirements. Testing requirements shall be performed by an independent testing laboratory or agency.

1.2.1 Structural Performance

Structural test pressures on window units shall be for positive load (inward) and negative load (outward) in accordance with ASTM E 330. After testing, there shall be no glass breakage, permanent damage to fasteners, hardware parts, support arms or actuating mechanisms or any other damage which could cause window to be inoperable. There shall be no permanent deformation of any main frame, sash or ventilator member in excess of the requirements established by AAMA AAMA/NWWDA 101 I.S.2 for the window types and classification specified in this section.

1.2.2 Air Infiltration

Air infiltration shall not exceed the amount established by AAMA AAMA/NWWDA 101 I.S.2 for each window type when tested in accordance with ASTM E 283.

1.2.3 Water Penetration

Water penetration shall not exceed the amount established by AAMA AAMA/NWWDA 101 I.S.2 for each window type when tested in accordance with ASTM E 547.

1.2.4 Thermal Performance

Thermal transmittance (U-value) for the complete window unit shall not exceed 3.4 w/sq.m times K (0.60 btu/hr times square f times F)R3.33 when tested in accordance with AAMA 1503.1.

1.2.5 Life Safety Criteria

Windows at all guestrooms shall conform to NFPA 101 Life Safety Code for rescue and/or second means of escape.

1.2.6 Life Cycle Testing

Windows must meets the performance levels specified in AAMA AAMA/NWWDA 101 I.S.2 for each window type when tested in accordance with AAMA 910.

1.2.7 Condensation Resistance

The Condensation Resistance Factor shall be no less than 60 when the window

unit is tested in accordance with AAMA 1503.1.

1.3 SUBMITTALS

Government approval is required for submittals with a "G" designation; submittals not having a "G" designation are for information only. When used, a designation following the "G" designation identifies the office that will review the submittal for the Government. The following shall be submitted in accordance with Section 01330 SUBMITTAL PROCEDURES:

SD-02 Shop Drawings

Aluminum Windows; G-AE
Insect Screens; G-AE

Drawings indicating elevations of window, rough-opening dimensions for each type and size of window, full-size sections, thicknesses of metal, fastenings, methods of installation and anchorage, connections with other work, type of wall construction, size and spacing of anchors, method of glazing, types and locations of operating hardware, mullion details, weatherstripping details, screen details including method of attachment , and window schedules showing locations of each window type.

SD-03 Product Data

Aluminum Windows;

Manufacturer's descriptive data and catalog cut sheets.

SD-04 Samples

Aluminum Windows; G-AE

Manufacturer's standard color samples of the specified finishes.

SD-06 Test Reports

Aluminum Windows;

Reports for each type of aluminum window attesting that identical windows have been tested and meet all performance requirements established under paragraph WINDOW PERFORMANCE.

SD-07 Certificates

Aluminum Windows;

Certificates stating that the aluminum windows are AAMA certified conforming to requirements of this section. Labels or markings permanently affixed to the window will be accepted in lieu of certificates.

SD-08 Manufacturer's Instructions

Aluminum Windows;

Manufacturer's preprinted installation instructions and cleaning instructions.

1.4 QUALIFICATION

Window manufacturer shall specialize in designing and manufacturing the type of aluminum windows specified in this section, and shall have a minimum of 10 years of documented successful experience. Manufacturer shall have the facilities capable of meeting contract requirements, single-source responsibility and warranty.

1.5 MOCK-UPS

Before fabrication, full-size mock-up of one window unit (typical guest room) complete with glass and AAMA certification label will be required for review of window construction and quality of hardware operation.

1.6 DELIVERY AND STORAGE

Aluminum windows shall be delivered to project site and stored in accordance with manufacturer's recommendations. Damaged windows shall be replaced with new windows.

1.7 WARRANTY

Manufacturer's standard performance guarantees or warranties that extend beyond a 1 year period shall be provided.

PART 2 PRODUCTS

2.1 ALUMINUM WINDOW TYPES

Aluminum windows shall be of the fixed and sliding, double-glazed, thermal-break types with minimum frame section depth not less than 100 mm (4 inches). Windows shall be designed for glazing from inside the building. Aluminum windows shall consist of complete units including sash, glass, frame, head and sill sub-frame, weatherstripping, head and jamb extensions, and hardware. Windows shall conform to AAMA AAMA/NWWDA 101 I.S.2. Operable windows shall permit cleaning the outside glass from inside the building.

2.1.1 Fixed Windows

Aluminum fixed (F) windows shall conform to AAMA AAMA/NWWDA 101 I.S.2 F-AW40 type, non-operable glazed frame, complete with provisions for reglazing in the field.

2.1.2 Horizontal-Sliding Windows

Aluminum horizontal (HS) sliding windows shall conform to AAMA AAMA/NWWDA 101 I.S.2 HS-AW40 type consisting of sliding sash and fixed lite with stainless steel 25 mm (1 inch) ball-bearing rollers with stainless steel track and limit stop. Windows shall be provided with jamb and cast bronze sweep lock at meeting rails to secure the sash in the closed position.

2.2 WEATHERSTRIPPING

Weatherstripping for ventilating sections shall be of type designed to meet water penetration and air infiltration requirements specified in this section in accordance with AAMA AAMA/NWWDA 101 I.S.2, and shall be manufactured of material compatible with aluminum and resistant to weather.

Weatherstrips shall be factory-applied and easily replaced in the field. Neoprene or polyvinylchloride weatherstripping are not acceptable where exposed to direct sunlight.

2.3 INSECT SCREENS

Insect screens shall be aluminum window manufacturer's standard design, and shall be provided where scheduled on drawings. Insect screens shall be fabricated of extruded tubular-shaped aluminum frames conforming to SMA ANSI/SMA 1004 and 18 x 16 aluminum mesh screening conforming with ISWA IWS 089, Type III. Screen mesh to be aluminum color.

2.4 ACCESSORIES

2.4.1 Fasteners

Fastening devices shall be window manufacturer's standard design made from aluminum, stainless steel, cadmium-plated steel, nickel/chrome-plated steel in compliance with AAMA AAMA/NWWDA 101 I.S.2. Self-tapping sheet metal screws will not be acceptable for material thicker than 1/16 inch.

2.4.2 Hardware

Hardware shall be as specified for each window type and shall be fabricated of aluminum, nonmagnetic stainless steel, or corrosion-resistant metal compatible with aluminum and of sufficient strength to perform the required function. Hardware shall be in accordance with requirements established by AAMA AAMA/NWWDA 101 I.S.2.

2.4.3 Window Anchors

Anchoring devices for installing windows shall be made of aluminum, cadmium-plated steel, stainless steel, or zinc-plated steel conforming to AAMA AAMA/NWWDA 101 I.S.2.

2.4.4 Sub Frames and Trim

Sub frames and trim shall be extruded aluminum of shapes and sizes as indcated on drawings. Minimum thickness of aluminum sill section is to be no less than manufacturer's standard thickness of snap trim covers for head and jamb extensions

2.5 GLASS AND GLAZING

Glass and glazing shall be factory installed. Glass type shall be Low E Sound Control Insulating Glass as specified in Section 08810 GLASS AND GLAZING. Units shall be complete with glass and glazing provisions to meet AAMA AAMA/NWWDA 101 I.S.2.

2.6 FINISH

2.6.1 Anodized Aluminum Finish

Exposed surfaces of aluminum windows shall be finished with anodic coating conforming to AA DAF-45: Architectural Class I, AA-M10-C22-A41, clear anodic coating, or thicker, 215-R1 Natural Color. Finish shall be free of scratches and other blemishes.

2.6.2 Not Used

2.6.3 Not Used

2.6.4 Color

Color shall be in accordance with Section 09915 COLOR SCHEDULE.

PART 3 EXECUTION

3.1 INSTALLATION

Aluminum windows shall be installed in accordance with approved shop drawings and manufacturer's published instructions. Aluminum surfaces in contact with masonry, concrete, wood and dissimilar metals other than stainless steel, zinc, cadmium or small areas of white bronze, shall be protected from direct contact using protective materials recommended by AAMA AAMA/NWWDA 101 I.S.2. The completed window installation shall be watertight in accordance with Section 07900 JOINT SEALING. Glass and glazing shall be installed in accordance with requirements of this section and Section 08810 GLASS AND GLAZING.

3.2 ADJUSTMENTS AND CLEANING

3.2.1 Hardware Adjustments

Final operating adjustments shall be made after glazing work is complete. Operating sash or ventilators shall operate smoothly and shall be weathertight when in locked position.

3.2.2 Cleaning

Aluminum window finish and glass shall be cleaned on exterior and interior sides in accordance with window manufacturer's recommendations. Alkaline or abrasive agents shall not be used. Precautions shall be taken to avoid scratching or marring window finish and glass surfaces.

-- End of Section --

This page was intentionally left blank for duplex printing.

SECTION TABLE OF CONTENTS

DIVISION 08 - DOORS & WINDOWS

SECTION 08700

BUILDERS' HARDWARE

03/96

PART 1 GENERAL

1.1 REFERENCES
1.2 SUBMITTALS
1.3 PREDELIVERY CONFERENCE
1.4 DELIVERY, STORAGE, AND HANDLING
1.5 SPECIAL TOOLS
1.6 WARRANTY
1.7 OPERATION AND MAINTENANCE MANUALS

PART 2 PRODUCTS

2.1 GENERAL HARDWARE REQUIREMENTS
2.2 TEMPLATES
2.3 HINGES
2.3.1 Hinges for Reverse Bevel Doors with Locks
2.3.2 Contractor's Option
2.4 LOCKS AND LATCHES
2.4.1 Mortise Lock and Latchsets
2.4.2 Not Used
2.4.3 Not Used
2.4.4 Auxiliary Locks and Associated Products
2.4.5 Lock Cylinders
2.4.6 Not Used
2.4.7 Not Used
2.4.8 Not Used
2.4.9 Lock Trim
2.4.10 Not Used
2.4.11 Electronic Locks (Self-Contained)
2.4.11.1 Mortise Electronic Locks
2.4.11.2 Trim
2.4.11.3 Finishes
2.4.11.4 Keycards
2.4.11.5 Electronic Circuit Assembly
2.4.11.6 Computer System
2.5 EXIT DEVICES AND EXIT DEVICE ACCESSORIES
2.5.1 Exit Devices and Auxiliary Items
2.6 KEYING
2.7 DOOR CLOSING DEVICES
2.7.1 Surface Type Closers
2.8 Not Used
2.9 Not Used
2.10 Not Used
2.11 ARCHITECTURAL DOOR TRIM
2.11.1 Door Protection Plates
2.11.1.1 Not Used

2.11.1.2 Kick Plates
2.11.2 Not Used
2.11.3 Not Used
2.11.4 Not Used
2.11.5 Not Used
2.11.6 Manual Security Door Guard
2.11.7 Door Viewer
2.11.8 Not Used
2.12 AUXILIARY HARDWARE
2.13 MISCELLANEOUS
2.13.1 Not Used
2.13.2 Metal Thresholds
2.13.3 Not Used
2.13.4 Not Used
2.13.5 Gasketing
2.13.6 Key Control
2.13.7 Door Stops
2.14 FASTENINGS
2.15 FINISHES
2.16 HARDWARE FOR FIRE DOORS

PART 3 EXECUTION

3.1 APPLICATION
3.1.1 Hardware for Fire Doors and Smoke-Control Door Assemblies
3.1.2 Door-Closing Devices
3.1.3 Not Used
3.1.4 Kick Plates
3.1.5 Not Used
3.1.6 Not Used
3.1.7 Not Used
3.1.8 Not Used
3.1.9 Gasketing
3.2 OPERATIONAL TESTS
3.3 FIELD QUALITY CONTROL
3.4 HARDWARE SETS

-- End of Section Table of Contents --

SECTION 08700

BUILDERS' HARDWARE
03/96

PART 1 GENERAL

1.1 REFERENCES

The publications listed below form a part of this specification to the extent referenced. The publications are referred to in the text by basic designation only.

AMERICAN SOCIETY FOR TESTING AND MATERIALS (ASTM)

ASTM E 283	(1991) Determining the Rate of Air Leakage Through Exterior Windows, Curtain Walls and Doors Under Specified Pressure Differences Across the Specimen

BUILDERS HARDWARE MANUFACTURERS ASSOCIATION (BHMA)

BHMA-01	(Effective thru Jun 1998) Directory of Certified Locks & Latches
BHMA-02	(Effective thru Jul 1997) Directory of Certified Door Closers
BHMA-03	(Effective thru Jul 1997) Directory of Certified Exit Devices
BHMA ANSI/BHMA A156.1	(1997) Butts and Hinges
BHMA ANSI/BHMA A156.2	(1996) Bored and Preassembled Locks and Latches
BHMA ANSI/BHMA A156.3	(1994) Exit Devices
BHMA ANSI/BHMA A156.4	(1992) Door Controls - Closers
BHMA ANSI/BHMA A156.5	(1992) Auxiliary Locks & Associated Products
BHMA ANSI/BHMA A156.6	(1994) Architectural Door Trim
BHMA ANSI/BHMA A156.7	(1988) Template Hinge Dimensions
BHMA ANSI/BHMA A156.13	(1994) Mortise Locks & Latches
BHMA ANSI/BHMA A156.16	(1989) Auxiliary Hardware
BHMA ANSI/BHMA A156.18	(1993) Materials and Finishes
BHMA ANSI/BHMA A156.21	(1996) Thresholds

DOOR AND HARDWARE INSTITUTE (DHI)

DHI-03	(1989) Keying Systems and Nomenclature
DHI-04	(1976) Recommended Locations for Builders' Hardware for Custom Steel Doors and Frames
DHI 05	(1990) Recommended Locations for Architectural Hardware for Standard Steel Doors and Frames
DHI-A115.1G	(1994) Installation Guide for Doors and Hardware
DHI A115-W	(Varies) Wood Door Hardware Standards (Incl All5-W1 thru A115-W9)

NATIONAL FIRE PROTECTION ASSOCIATION (NFPA)

NFPA 80	(1995) Fire Doors and Fire Windows
NFPA 101	(1997; Errata 97-1) Life Safety Code
NFPA 105	(1993) Installation of Smoke-Control Door Assemblies

1.2 SUBMITTALS

Government approval is required for submittals with a "G" designation; submittals not having a "G" designation are for information only. When used, a designation following the "G" designation identifies the office that will review the submittal for the Government. The following shall be submitted in accordance with Section 01330 SUBMITTAL PROCEDURES:

SD-02 Shop Drawings

Hardware Devices; G-AO

Detail drawings for hardware devices for computerized keying systems, magnetic cards, and other electrical hardware devices showing complete wiring and schematic diagrams and other details required to demonstrate proper function of units.

SD-03 Product Data

Hardware and Accessories;

Manufacturer's descriptive data, technical literature, catalog cuts, and installation instructions. Spare parts data for locksets, exit devices, closers, electronic locks, and electro-magnetic closer holder release devices, after approval of the detail drawings, and not later than 3 months prior to the date of beneficial occupancy. The data shall include a complete list of parts and supplies, with current unit prices and source of supply.

Hardware Schedule; G-AE

Hardware schedule listing all items to be furnished. The schedule shall include for each item: the quantities; manufacturer's name and catalog numbers; the ANSI number specified, sizes; detail information or catalog cuts; finishes; door and frame size and materials; location and hardware set identification cross-references to drawings; corresponding reference standard type number or function number from manufacturer's catalog if not covered by ANSI or BHMA; and list of abbreviations and template numbers.

Keying Schedule; G-AO

Keying schedule developed in accordance with DHI-03, after the keying meeting with the user.

SD-07 Certificates

Hardware and Accessories;

The hardware manufacturer's certificates of compliance stating that the supplied material or hardware item meets specified requirements. Each certificate shall be signed by an official authorized to certify in behalf of the product manufacturer and shall identify quantity and date or dates of shipment or delivery to which the certificates apply. A statement that the proposed hardware items appear in BHMA-01, BHMA-02 and BHMA-03 directories of certified products may be submitted in lieu of certificates.

1.3 PREDELIVERY CONFERENCE

Upon approval of the Hardware Schedule, the construction Contractor shall arrange a conference with the hardware supplier, Contracting Officer and the using agency to determine keying system requirements. Location of the key control storage system, set-up and key identification labeling will also be determined.

1.4 DELIVERY, STORAGE, AND HANDLING

Hardware shall be delivered to the project site in the manufacturer's original packages. Each article of hardware shall be individually packaged in the manufacturer's standard commercial carton or container, and shall be properly marked or labeled to be readily identifiable with the approved hardware schedule. Each change key shall be tagged or otherwise identified with the door for which its cylinder is intended. Where double cylinder functions are used or where it is not obvious which is the key side of a door, appropriate instructions shall be included with the lock and on the hardware schedule. Manufacturer's printed installation instructions, fasteners, and special tools shall be included in each package.

1.5 SPECIAL TOOLS

Special tools, such as those supplied by the manufacturer, unique wrenches, and dogging keys, shall be provided as required to adjust hardware items.

1.6 WARRANTY

Manufacturer's standard performance guarantees or warranties that extend beyond a one year period shall be provided.

1.7 OPERATION AND MAINTENANCE MANUALS

Six complete copies of maintenance instructions listing routine maintenance procedures, possible breakdowns and repairs, and troubleshooting guides shall be provided. The instructions for electric locks, electric strikes, electro-magnetic closer holder release devices, and electric exit devices shall include simplified diagrams as installed.

PART 2 PRODUCTS

2.1 GENERAL HARDWARE REQUIREMENTS

Hardware shall conform to the requirements specified herein and the HARDWARE SETS listing at the end of this section. Hardware set numbers correspond to the set numbers shown on the drawings.

2.2 TEMPLATES

Requirements for hardware to be mounted on metal doors or metal frames shall be coordinated between hardware manufacturer and door or frame manufacturer by use of templates and other information to establish location, reinforcement required, size of holes, and similar details. Templates of hinges shall conform to BHMA ANSI/BHMA A156.7.

2.3 HINGES

Hinges shall conform to BHMA ANSI/BHMA A156.1. Hinges used on metal doors and frames shall also conform to BHMA ANSI/BHMA A156.7. Except as otherwise specified, hinge sizes shall conform to the hinge manufacturer's printed recommendations. Exterior hinges shall be stainless steel with stainless steel pin and flat button types. Interior hinges shall be steel with steel pin and flat button types. Finish shall be dull chrome.

2.3.1 Hinges for Reverse Bevel Doors with Locks

Hinges for reverse bevel doors with locks shall have pins that are made nonremovable by means such as a set screw in the barrel, or safety stud, when the door is in the closed position.

2.3.2 Contractor's Option

Hinges with antifriction bearings may be furnished in lieu of ball bearing hinges, except where prohibited for fire doors by the requirements of NFPA 80.

2.4 LOCKS AND LATCHES

To the maximum extent possible, locksets, latchsets and deadlocks, and all components thereof, including cylinders and removable cores, shall be the products of a single manufacturer. Strikes for pairs of wood doors shall be furnished with wrought boxes. Finish for locksets, latchsets and deadlocks to be BHMA 626 or 652 (US 26D).

2.4.1 Mortise Lock and Latchsets

Mortise lock, latchsets, and strikes shall be series 1000 and shall conform to BHMA ANSI/BHMA A156.13, operational Grade 1. Mortise type locks and latches for doors thick and over shall have adjustable bevel fronts or otherwise conform to the shape of the door. Mortise locks shall have

armored fronts. Lock throw to be minimum 19 mm (3/4 inch).

2.4.2 Not Used

2.4.3 Not Used

2.4.4 Auxiliary Locks and Associated Products

Mortise dead locks and dead latches, rim latches, dead latches, and dead bolts, shall conform to BHMA ANSI/BHMA A156.5. Bolt and latch retraction shall be dead bolt style. Strike boxes shall be furnished with dead bolt and latch strikes for Grade 1.

2.4.5 Lock Cylinders

Lock cylinders shall comply with BHMA ANSI/BHMA A156.5. Lock cylinders shall have seven pin combinated cores with Best style cappings. Cylinders shall have key removable type cores. A grand master keying system shall be provided. Construction interchangeable cores shall be provided. Disassembly of knob or lockset shall not be required to remove core from lockset. All locksets, lockable exit devices, and padlocks shall accept same interchangeable cores.

2.4.6 Not Used

2.4.7 Not Used

2.4.8 Not Used

2.4.9 Lock Trim

Lock trim shall be cast or forged construction of commercial plain design. In addition to meeting the test requirement of BHMA ANSI/BHMA A156.2 or BHMA ANSI/BHMA A156.13, lever handles, roses, and escutcheons shall be thick, if unreinforced. If reinforced, the outer shell shall be thick and the combined thickness shall be Lever handle design shall be similar to Schlage, L Series No. 07, with curved, flat face design and ends returned to no more than from the door face.

2.4.10 Not Used

2.4.11 Electronic Locks (Self-Contained)

Notwithstanding Section 00700 CONTRACT CLAUSES FAR 52.236-5, Material and Workmanship, the Electronic Lock System shall be manufactured by TESA Entry Systems in order to be fully compatible with and interface with the existing Phase 1 & 2 Lodging facility. No other product will be acceptable. The competition Advocate authorizes sole source procurement.

2.4.11.1 Mortise Electronic Locks

Locksets shall be Tesa HT24 Series (mortise type, tamper resistant, door units). Provide Grade 1, BHMA ANSI/BHMA 156.13 series 1000, UL listed mortise locks equipped with adjustable plain, rectangular shaped armored front, 25 mm (1 inch) throw hardened steel insert dead bolt, 19 mm (3/4 inch) deadlocking latch bolt and 70 MM (2-3/4 inch) backset. Latch bolt and dead bolt shall operate simultaneously by rotating inside lever. Locks with mechanical override lock cylinders are not acceptable.

2.4.11.2 Trim

Provide lever handles with return for all locks. Lever design to be Tesa "Jerez" lever style to match existing lever handles.

2.4.11.3 Finishes

Comply with BHMA ANSI/BHMA 156.18. Provide units of basic metal and forming method indicated using manufacturer's standard metal alloy, composition, temper and hardness, but in no case of lesser commercially recognized quality than specified. Do not furnish "optional" materials or forming method for those indicated except as otherwise specified. Provide protective coating on all exposed finishes.

2.4.11.4 Keycards

Activation of all units shall be by use of insertion of magnetic strip encoded keycards. Keycards shall resist tearing, bending, scratching and shall be water resistant. Keycards shall have no less than a 600 coersivity magnetic strip.

2.4.11.5 Electronic Circuit Assembly

Exterior housing shall be totally self-contained, tamper resistant, door mounted units. No wiring shall be permitted through the door. Exterior door assembly shall require horizontal keycard entry to eliminate foreign matter from entering or being spilled into the keycard slot.

2.4.11.6 Computer System

System shall be tied into the existing primary computer provided by the Government in the Phase One building and shall include required cabling, emergency lock power supply, manuals, keys,and lock programmer/Interrogator Probe.

2.5 EXIT DEVICES AND EXIT DEVICE ACCESSORIES

Exit devices and exit device accessories shall conform to BHMA ANSI/BHMA A156.3, Grade 1.

2.5.1 Exit Devices and Auxiliary Items

Trim shall be of wrought construction and commercial plain design with straight, beveled, or smoothly rounded sides, corners, and edges. Adjustable strikes shall be provided for rim type and vertical rod devices. Open back strikes shall be provided for pairs of doors with mortise and vertical rod devices; except open back strikes shall be used on labeled doors only where specifically provided for in the published listings. Vertical rods shall be concealed. Touch bars shall be provided with smooth finish. Provide lever trim without escutcheon plate. Trim to match lockset lever specified in 2.4.9 (Lock Trim).

2.6 KEYING

Locks shall be keyed in sets or subsets as scheduled and shall be coordinated with existing keying system for the building. Locks shall be furnished with the manufacturer's standard construction key system. Change keys for locks shall be stamped with change number and the inscription "U.S. Property - Do Not Duplicate." Keys shall be supplied as follows:

Locks:	3 change keys each lock.
Master keyed sets:	3 keys each set.
Grand master keys:	3 total.
Control keys:	3 total.

The keys shall be furnished to the Contracting Officer arranged for key control system storage in sets or subsets as scheduled.

2.7 DOOR CLOSING DEVICES

Door closing devices shall conform to BHMA ANSI/BHMA A156.4, Grade 1. Closing devices shall be products of one manufacturer for each type specified. The opening resistance of closing devices shall not exceed applied at the latch stile or exceed where low opening resistance is scheduled.

2.7.1 Surface Type Closers

Surface type closers shall be Grade 1, Series C02000 Full Cover with options PT-4H, Size 1 or 2 through Size 6, and PT-4D with back check position valve. Closers to have 38 mm (1.5 inch) piston, minimum 15 mm (5/8 inch) spindle and forged steel arm. Except as otherwise specified, sizes shall conform to the manufacturer's published recommendations. Closers for outswinging exterior doors shall have parallel arms or shall be top jamb mounted. Closers for doors close to a wall shall be of narrow projection so as not to strike the wall at the 90-degree open position. Where indicated in hardware sets, provide integral stop with closer.

2.8 Not Used

2.9 Not Used

2.10 Not Used

2.11 ARCHITECTURAL DOOR TRIM

Architectural door trim shall conform to BHMA ANSI/BHMA A156.6.

2.11.1 Door Protection Plates

2.11.1.1 Not Used

2.11.1.2 Kick Plates

Kick plates shall be Type J102 stainless steel. Width of plates shall be 50 mm (2 inches) less than door width for single doors and 25 mm (1 inch) less for pairs of doors. Height shall be 50 mm (2 inches).

2.11.2 Not Used

2.11.3 Not Used

2.11.4 Not Used

2.11.5 Not Used

2.11.6 Manual Security Door Guard

Door guard to be equivalent to Ives No. 482, two piece solid bar door guard with auxiliary door edge guards (provide two edge guards per door)in US26D finish.

2.11.7 Door Viewer

Door viewer to be 160 degree, one way cylindrical door viewer in US26D finish.

2.11.8 Not Used

2.12 AUXILIARY HARDWARE

Auxiliary hardware, consisting of door holders, door stops, and roller latches, shall conform to BHMA ANSI/BHMA A156.16. Lever extension flush bolts shall be Type L14081. Dust-proof strikes shall be Type L04011 for doors that are not fire rated. Other auxiliary hardware shall conform to BHMA ANSI/BHMA A156.16.

2.13 MISCELLANEOUS

2.13.1 Not Used

2.13.2 Metal Thresholds

Thresholds shall conform to BHMA ANSI/BHMA A156.21. Thresholds for exterior doors shall be extruded aluminum of the type indicated and shall provide proper clearance and an effective seal with specified weather stripping. Where required, thresholds shall be modified to receive projecting bolts of flush bolts. Thresholds for doors accessible to the handicapped shall be beveled with slopes not exceeding 1:2 and with heights not exceeding (1/2 inch). Where thresholds abut ceramic tile finishes, a half saddle threshold design shall be provided. Air leakage rate of weatherstripping shall not exceed (0.5 cubic feet per minute) per lineal foot of crack when tested in accordance with ASTM E 283 at standard test conditions.

2.13.3 Not Used

2.13.4 Not Used

2.13.5 Gasketing

Gasketing shall be a compression type seal, silicon based, self-adhesive product for use on steel door frames with wood or steel doors for 20-minute, 45 minute C-label, 1-hour B-label, and 1-1/2 hour B-label. Color shall be bronze. Air leakage rate of weatherstripping shall not exceed (0.5 cubic feet per minute) per lineal foot of crack when tested in accordance with ASTM E 283 at standard test conditions.

2.13.6 Key Control

Set up, identification labeling and integration with the existing key control storage shall be as directed at by the Contracting Officer at the Predelivery Conference.

2.13.7 Door Stops

Door stops are to be wall mounted wherever feasible, and are to be 64mm (2

1/2 inch) diameter convex style with concealed mounting. All wall stops shall conform to BHMA ANSI/BHMA A156.16 and are to be in US26D finish.

2.14 FASTENINGS

Fastenings of proper type, size, quantity, and finish shall be supplied with each article of hardware. Machine screws and expansion shields shall be used for attaching hardware to concrete or masonry. Fastenings exposed to the weather in the finished work shall be of brass, bronze, or stainless steel. Sex bolts, through bolts, or machine screws and grommet nuts, where used on reverse-bevel exterior doors equipped with half-surface or full-surface hinges, shall employ one-way screws or other approved tamperproof screws. Screws for the jamb leaf of half-mortise and full-surface hinges attached to structural steel frames shall be one-way or other approved tamperproof type.

2.15 FINISHES

Unless otherwise specified, finishes shall conform to those identified in BHMA ANSI/BHMA A156.18. Where painting of primed surfaces is required, painting is specified in Section 09900 PAINTING, GENERAL.

2.16 HARDWARE FOR FIRE DOORS

Hardware for fire doors shall conform to the requirements of NFPA 80and NFPA 101.

PART 3 EXECUTION

3.1 APPLICATION

Hardware shall be located in accordance with DHI-04 and DHI 05, except that deadlocks shall be mounted above finish floor. When approved, slight variations in locations or dimensions will be permitted. Application shall be in accordance with DHI-A115.1G or DHI A115-W. Door control devices for exterior doors such as closers and holders, shall be attached to doors with thru bolts and nuts or sex bolts. Alternate fastening methods may be approved by the Contracting Officer when manufacturers' documentation is submitted to verify that the fastening devices and door reinforcements are adequate to resist wind induced stresses. Electric hardware items and access control devices shall be installed in accordance with manufacturer's printed installation procedures.

3.1.1 Hardware for Fire Doors and Smoke-Control Door Assemblies

Hardware for fire doors shall be installed in accordance with the requirements of NFPA 80. Exit devices installed on fire doors shall have a visible label bearing the marking "Fire Exit Hardware". Other hardware installed on fire doors, such as locksets, closers, and hinges shall have a visible label or stamp indicating that the hardware items have been approved by an approved testing agency for installation on fire-rated doors. Hardware for smoke-control door assemblies shall be installed in accordance with NFPA 105.

3.1.2 Door-Closing Devices

Door-closing devices shall be installed and adjusted in accordance with the templates and printed instructions supplied by the manufacturer of the devices. Insofar as practicable, doors opening to or from halls and

corridors shall have the closer mounted on the room side of the door.

3.1.3 Not Used

3.1.4 Kick Plates

Kick plates shall be installed on the push side of single-acting doors.

3.1.5 Not Used

3.1.6 Not Used

3.1.7 Not Used

3.1.8 Not Used

3.1.9 Gasketing

Gasketing shall be installed at the inside edge of the hinge and head and latch sides of door frame. Frames shall be toleranced for a 1/8 inch clearance between door and frame. Frames shall be treated with tape primer prior to installation.

3.2 OPERATIONAL TESTS

Prior to acceptance of any electrical hardware system, an operational test shall be performed to determine if devices are operating as intended by the specifications. Wiring shall be tested for correct voltage, current carrying capacity, and proper grounding. Stray voltages in lock wiring shall be eliminated to prevent locking devices from releasing in critical situations.

3.3 FIELD QUALITY CONTROL

Supplier shall inspect the completed installation and certify that the hardware has been furnished and installed in accordance with the manufacturers' instructions [and as specified]. The inspection report shall identify any malfunctioning items and recommend adjustment or replacement as appropriate.

3.4 HARDWARE SETS

HW-1	Not Used	
HW-1NR	Not Used	
HW-2	Not Used	
HW-2NR	Not Used	
HW-3	1-1/2 pr.	Hinges, A8112
	1 ea.	Lockset, F01 (Passage Function) -Grade 1
	1 ea.	Closer, C02021
	1 ea.	Stop, L02101
	1 ea.	Set Smoke Gasketing
HW-3NR	1-1/2 pr.	Hinges, A8112
	1 ea.	Lockset, F01 (Passage Function) -Grade 1
	1 ea.	Closer, C02021

	1 ea.	Stop, L02101
HW-4	Not Used	
HW-5	1-1/2 pr.	Hinges, A8112
	1 ea.	Electronic Lockset, F15, -Grade 1
	1 ea.	Closer, C02021
	1 ea.	Stop, L02101
	1 ea.	Set Smoke Gasketing
	1 ea.	Door Viewer
	1 set ea.	Manual Security Door Guard
	1 ea.	Kickplate
HW-6	1-1/2 pr.	Hinges, A8133
	1 ea.	Lockset, F02(Privacy Function) -Grade 1
	1 ea.	Stop, L02101

HW-7 Section 08700 is to supply cylinders where required by Section 08120. Aluminum door supplier is to furnish and coordinate all other hardware specified in Section 09120 - Aluminum Storefront and Entrances.

HW-8 Not Used

HW-9 Not Used

HW-10 Not Used

HW-11 Not Used

-- End of Section --

This page was intentionally left blank for duplex printing.

SECTION TABLE OF CONTENTS

DIVISION 08 - DOORS & WINDOWS

SECTION 08810

GLASS AND GLAZING

05/97

PART 1 GENERAL

1.1 REFERENCES
1.2 SUBMITTALS
1.3 SYSTEM DESCRIPTION
1.4 DELIVERY, STORAGE AND HANDLING
1.5 PROJECT/SITE CONDITIONS
1.6 WARRANTY
1.6.1 Insulating Glass

PART 2 PRODUCTS

2.1 FLOAT GLASS
2.1.1 Annealed Glass
2.2 Not Used
2.3 INSULATING GLASS
2.3.1 Not Used
2.3.2 Not Used
2.3.3 Ceramic-Frit Coated Insulating Spandrel Glass
2.3.4 Low-E Insulating Glass
2.3.5 Low-E Sound Control Insulating Glass
2.4 Not Used
2.5 HEAT-TREATED GLASS
2.5.1 Tempered Glass
2.6 Not Used
2.7 FIRE/SAFETY RATED GLASS
2.8 MIRRORS
2.8.1 Glass Mirrors
2.8.2 Mirror Accessories
2.8.2.1 Mastic
2.8.2.2 Mirror Frames
2.8.2.3 Mirror Clips
2.9 GLAZING ACCESSORIES
2.9.1 Preformed Tape
2.9.2 Sealant
2.9.3 Glazing Gaskets
2.9.3.1 Fixed Glazing Gaskets
2.9.3.2 Wedge Glazing Gaskets
2.9.3.3 Aluminum Framing Glazing Gaskets
2.9.4 Putty and Glazing Compound
2.9.5 Setting and Edge Blocking

PART 3 EXECUTION

3.1 PREPARATION
3.2 INSTALLATION

3.3 CLEANING
3.4 PROTECTION

-- End of Section Table of Contents --

SECTION 08810

GLASS AND GLAZING
05/97

PART 1 GENERAL

1.1 REFERENCES

The publications listed below form a part of this specification to the extent referenced. The publications are referred to in the text by basic designation only.

AMERICAN NATIONAL STANDARDS INSTITUTE (ANSI)

ANSI Z97.1	(1984; R 1994) Safety Performance Specifications and Methods of Test for Safety Glazing Materials Used in Buildings

AMERICAN SOCIETY FOR TESTING AND MATERIALS (ASTM)

ASTM C 509	(1994) Elastomeric Cellular Preformed Gasket and Sealing Material
ASTM C 669	(1995) Glazing Compounds for Back Bedding and Face Glazing of Metal Sash
ASTM C 864	(1993) Dense Elastomeric Compression Seal Gaskets, Setting Blocks, and Spacers
ASTM C 920	(1995) Elastomeric Joint Sealants
ASTM C 1036	(1991) Flat Glass
ASTM C 1048	(1992) Heat-Treated Flat Glass - Kind HS, Kind FT Coated and Uncoated Glass
ASTM D 395	(1989; R 1994) Rubber Property - Compression Set
ASTM E 119	(1995a) Fire Tests of Building Construction and Materials
ASTM E 773	(1988) Seal Durability of Sealed Insulating Glass Units
ASTM E 774	(1992) Sealed Insulating Glass Units
ASTM E 1300	(1994) Determining the Minimum Thickness and Type of Glass Required to Resist a Specified Load

COMMERCIAL ITEM DESCRIPTION (CID)

CID A-A-378	(Basic) Putty Linseed Oil Type, (for Wood-Sash-Glazing)

GLASS ASSOCIATION OF NORTH AMERICA (GANA)

GANA-01	(1997) Glazing Manual
GANA-04	(1995) Engineering Standards Manual

NATIONAL FIRE PROTECTION ASSOCIATION (NFPA)

NFPA 80	(1995) Fire Doors and Fire Windows

1.2 SUBMITTALS

Government approval is required for submittals with a "G" designation; submittals not having a "G" designation are for information only. When used, a designation following the "G" designation identifies the office that will review the submittal for the Government. The following shall be submitted in accordance with Section 01330 SUBMITTAL PROCEDURES:

SD-02 Shop Drawings

Glazing Materials and Accessories;

Drawings showing complete details of the proposed setting methods, mullion details, edge blocking, size of openings, frame details, materials, and types and thickness of glass.

SD-03 Product Data

Glass;

Manufacturer's descriptive product data, handling and storage recommendations, installation instructions, and cleaning instructions.

SD-04 Samples

Glass; G-AE

Two (12 x 12 inch) samples of insulating glass and spandrel glass units.

SD-07 Certificates

Glass;

Certificates stating that the glass meets the specified requirements. Labels or manufacturers marking affixed to the glass will be accepted in lieu of certificates.

1.3 SYSTEM DESCRIPTION

Glazing systems shall be fabricated and installed watertight and airtight to withstand thermal movement and wind loading without glass breakage, gasket failure, deterioration of glazing accessories, and defects in the work. Glazed panels shall comply with the safety standards, as indicated in accordance with ANSI Z97.1. Glazed panels shall comply with indicated wind/snow loading in accordance with ASTM E 1300.

1.4 DELIVERY, STORAGE AND HANDLING

Glazing compounds shall be delivered to the site in the manufacturer's unopened containers. Glass shall be stored indoors in a safe, well ventilated dry location in accordance with manufacturer's instructions, and shall not be unpacked until needed for installation. Glass shall not be stored on site over 1 month.

1.5 PROJECT/SITE CONDITIONS

Glazing work shall not be started until outdoor temperature is above (40 degrees F) and rising, unless procedures recommended by glass manufacturer and approved by Contracting Officer are made to warm the glass and rabbet surfaces. Ventilation shall be provided to prevent condensation of moisture on glazing work during installation. Glazing work shall not be performed during damp or raining weather.

1.6 WARRANTY

1.6.1 Insulating Glass

Manufacturer shall warrant the insulating glass to be free of fogging or film formation on the internal glass surfaces caused by failure of the hermetic seal for a period of 10 years from Date of Substantial Completion. Warranty shall be signed by manufacturer.

PART 2 PRODUCTS

2.1 FLOAT GLASS

2.1.1 Annealed Glass

Annealed glass shall be Type I transparent flat type, Class 1 - clear , Quality q3 - glazing select, 89 percent visible light transmittance, .96 shading coefficient, conforming to ASTM C 1036.

2.2 Not Used

2.3 INSULATING GLASS

Insulating glass shall be Class A preassembled units of dual-seal construction consisting of lites of glass separated by an aluminum, steel, or stainless steel, spacer and dehydrated space conforming to ASTM E 773 and ASTM E 774. Spacer shall be roll-formed, with bent or tightly welded or keyed and sealed joints to completely seal the spacer periphery and eliminate moisture and hydrocarbon vapor transmission into airspace through the corners. Primary seal shall be compressed polyisobutylene and the secondary seal shall be a specially formulated silicone. Glass types shall be as follows:

2.3.1 Not Used

2.3.2 Not Used

2.3.3 Ceramic-Frit Coated Insulating Spandrel Glass

Insulating spandrel glass shall be heat-strengthened transparent flat type, Condition B, roller-coated with a colored ceramic frit material on the No. 3 surface, Quality q3 - glazing select, conforming to ASTM C 1048. Color

shall be "Warm Gray" by Oldcastle Glass in order to match the previous phases of work.

2.3.4 Low-E Insulating Glass

Exterior glass panes for Low-E insulating units shall be Type I annealed flat glass, Class 1-clear with anti-reflective, high performance special low-emissivity coating on No. 2 surface (inside surface of exterior pane), Quality q3 - glazing select, conforming to ASTM C 1036. Interior glass panes shall consist of two layers of Type I annealed, 3 mm (1/8 inch) thick flat glass, bonded together with 0.76 mm (0.030 inch) thick PVB interlayer under pressure. Glass performance shall achieve K-Value of 1.6, R-Value (Winter Nighttime) of .29, visible light transmittance of 70 percent, and shading coefficient of .43. Overall glass unit thickness shall be 25 mm (1 inch).

2.3.5 Low-E Sound Control Insulating Glass

Interior and exterior glass panes for Low-E sound control insulating units shall each consist of two layers of Type I transparent 3 mm (1/8 inch) thick heat strengthened flat glass, bonded together with 0.76 mm (0.030 inch) thick PVB interlayer under pressure, conforming to requirements of 16 CRF 1201 and ASTM C 1172. Glass shall be class 1- clear with anti-reflective, high performance special low-emissivity coating on No. 2 surface (inside surface of exterior pane), Quality q3 - glazing select, conforming to ASTM C1036. Glass assembly STC rating shall be 42. Glass performance shall achieve K-value of 1.6, R-value (Winter Nighttime) of .29, visible light transmittance of 70 percent, and shading coefficient of .43. Overall glass unit thickness shall be 25 mm (1 inch).

2.4 Not Used

2.5 HEAT-TREATED GLASS

Heat-treated glass shall conform to the following requirements.

2.5.1 Tempered Glass

Tempered glass shall be kind FT fully tempered transparent flat type, Class 1-clear, Condition A uncoated surface, Quality q3 - glazing select, 89 percent light transmittance, shading coefficient of .96, conforming to ASTM C 1048 and GANA-04. Color shall be clear.

2.6 Not Used

2.7 FIRE/SAFETY RATED GLASS

Fire/safety rated glass shall be laminated Type I transparent flat type, Class 1-clear. Glass shall have a 20 minute rating when tested in accordance with ASTM E 119. Glass shall be permanently labeled with appropriate markings.

2.8 MIRRORS

2.8.1 Glass Mirrors

Glass for mirrors shall be Type I transparent flat type, Class 1-clear, Glazing Quality q1 thick conforming to ASTM C 1036. Glass color shall be

clear. Glass shall be coated on one surface with silver coating, copper protective coating, and mirror backing paint. Silver coating shall be highly adhesive pure silver coating of a thickness which shall provide reflectivity of 83 percent or more of incident light when viewed through thick glass, and shall be free of pinholes or other defects. Copper protective coating shall be pure bright reflective copper, homogeneous without sludge, pinholes or other defects, and shall be of proper thickness to prevent "adhesion pull" by mirror backing paint. Mirror backing paint shall consist of two coats of special scratch and abrasion-resistant paint , and shall be baked in uniform thickness to provide a protection for silver and copper coatings which will permit normal cutting and edge fabrication.

2.8.2 Mirror Accessories

2.8.2.1 Mastic

Mastic for setting mirrors shall be a polymer type mirror mastic resistant to water, shock, cracking, vibration and thermal expansion. Mastic shall be compatible with mirror backing paint, and shall be approved by mirror manufacturer.

2.8.2.2 Mirror Frames

Mirrors above vanities shall be provided with mirror frames (J-mold channels) fabricated of one-piece roll-formed Type 304 stainless steel with No. 4 brushed satin finish and concealed fasteners which will keep mirrors snug to wall. Frames shall be continuous at top and bottom of mirrors. Concealed fasteners of type to suit wall construction material shall be provided with mirror frames.

2.8.2.3 Mirror Clips

At door mounted mirrors, adjustable individual clips (in size and finish as described in 2.9.3.2) may be provided in minimum 25 mm (1 inch) length at top and bottom of mirrors. Concealed fasteners of type to suit door construction material shall be provided with clips.

2.9 GLAZING ACCESSORIES

2.9.1 Preformed Tape

Preformed tape shall be elastomeric rubber extruded into a ribbon of a width and thickness suitable for specific application. Tape shall be of type which will remain resilient, have excellent adhesion, and be chemically compatible to glass, metal, or wood.

2.9.2 Sealant

Sealant shall be elastomeric conforming to ASTM C 920, Type S or M, Grade NS, Class 12.5, Use G, of type chemically compatible with setting blocks, preformed sealing tape and sealants used in manufacturing insulating glass. Color of sealant shall be as selected from manufacturers standards.

2.9.3 Glazing Gaskets

Glazing gaskets shall be extruded with continuous integral locking projection designed to engage into metal glass holding members to provide a watertight seal during dynamic loading, building movements and thermal movements. Glazing gaskets for a single glazed opening shall be continuous

one-piece units with factory-fabricated injection-molded corners free of flashing and burrs. Glazing gaskets shall be in lengths or units recommended by manufacturer to ensure against pull-back at corners. Glazing gasket profiles shall be as indicated on drawings.

2.9.3.1 Fixed Glazing Gaskets

Fixed glazing gaskets shall be closed-cell (sponge) smooth extruded compression gaskets of cured elastomeric virgin neoprene compounds conforming to ASTM C 509, Type 2, Option 1.

2.9.3.2 Wedge Glazing Gaskets

Wedge glazing gaskets shall be high-quality extrusions of cured elastomeric virgin neoprene compounds, ozone resistant, conforming to ASTM C 864, Option 1, Shore A durometer between 65 and 75.

2.9.3.3 Aluminum Framing Glazing Gaskets

Glazing gaskets for aluminum framing shall be permanent, elastic, non-shrinking, non-migrating, watertight and weathertight.

2.9.4 Putty and Glazing Compound

Glazing compound shall conform to ASTM C 669 for face-glazing metal sash. Putty shall be linseed oil type conforming to CID A-A-378for face-glazing primed wood sash. Putty and glazing compounds shall not be used with insulating glass or laminated glass.

2.9.5 Setting and Edge Blocking

Neoprene setting blocks shall be dense extruded type conforming to ASTM D 395, Method B, Shore A durometer between 70 and 90. Edge blocking shall be Shore A durometer of 50 (+ or - 5). Silicone setting blocks shall be required when blocks are in contact with silicone sealant. Profiles, lengths and locations shall be as required and recommended in writing by glass manufacturer.

PART 3 EXECUTION

3.1 PREPARATION

Openings and framing systems scheduled to receive glass shall be examined for compliance with approved shop drawings, GANA-01 and glass manufacturer's recommendations including size, squareness, offsets at corners, presence and function of weep system, face and edge clearance requirements and effective sealing between joints of glass-framing members. Detrimental materials shall be removed from glazing rabbet and glass surfaces and wiped dry with solvent. Glazing surfaces shall be dry and free of frost.

3.2 INSTALLATION

Glass and glazing work shall be performed in accordance with approved shop drawings, GANA-01, glass manufacturer's instructions and warranty requirements. Glass shall be installed with factory labels intact and removed only when instructed. Wired glass and fire/safety rated glass shall be installed in accordance with NFPA 80. Edges and corners shall not be ground, nipped or cut after leaving factory. Springing, forcing or

twisting of units during installation will not be permitted.

3.3 CLEANING

Upon completion of project, outside surfaces of glass shall be washed clean and the inside surfaces of glass shall be washed and polished in accordance with glass manufacturer's recommendations.

3.4 PROTECTION

Glass work shall be protected immediately after installation. Glazed openings shall be identified with suitable warning tapes, cloth or paper flags, attached with non-staining adhesives. Reflective glass shall be protected with a protective material to eliminate any contamination of the reflective coating. Protective material shall be placed far enough away from the coated glass to allow air to circulate to reduce heat buildup and moisture accumulation on the glass. Glass units which are broken, chipped, cracked, abraded, or otherwise damaged during construction activities shall be removed and replaced with new units.

-- End of Section --

This page was intentionally left blank for duplex printing.

SECTION TABLE OF CONTENTS

DIVISION 09 - FINISHES

SECTION 09250

GYPSUM WALLBOARD

06/97

PART 1 GENERAL

1.1 REFERENCES
1.2 SYSTEM DESCRIPTION
1.2.1 Fire-Rated Construction
1.3 SUBMITTALS
1.4 QUALIFICATIONS
1.5 DELIVERY, STORAGE AND HANDLING
1.6 ENVIRONMENTAL CONDITIONS

PART 2 MATERIALS

2.1 NON-LOADBEARING STUD WALLS
2.1.1 Studs
2.1.2 Runner Tracks
2.2 SUSPENDED CEILING FRAMING
2.3 GYPSUM BOARD
2.3.1 Standard Gypsum Board
2.3.2 Fire-Rated Gypsum Board
2.3.3 Water-Resistant Gypsum Board
2.3.4 Not Used
2.3.5 Not Used
2.3.6 Not Used
2.3.7 Not Used
2.3.8 Exterior Sheathing Board
2.4 TRIM, MOLDINGS, AND ACCESSORIES
2.4.1 Taping and Embedding Compound
2.4.2 Finishing or Topping Compound
2.4.3 All-Purpose Compound
2.4.4 Joint Tape
2.4.5 Trim, Control Joints, Beads, Stops and Nosings
2.5 FASTENINGS AND ADHESIVES
2.5.1 Nails
2.5.2 Screws
2.5.3 Adhesives
2.5.4 Hangers
2.5.5 Wire and Clip Type Fastenings
2.5.5.1 Tie Wire
2.5.5.2 Clips
2.6 TILE BACKER UNITS
2.7 COLUMN COVERS
2.8 CEILING SPRAY TEXTURE

PART 3 EXECUTION

3.1 INTERIOR WALL FRAMING

3.1.1 Wall Openings
3.1.2 Wall Control Joints
3.1.3 Blocking
3.2 Not Used
3.3 SUSPENDED CEILING FRAMING
3.3.1 Hangers
3.3.2 Main Runners
3.3.3 Furring Channels
3.3.4 Ceiling Openings
3.3.5 Light Fixtures and Air Diffusers
3.3.6 Control Joints
3.3.6.1 Interior Ceilings With Perimeter Relief
3.3.6.2 Interior Ceilings Without Perimeter Relief
3.4 APPLICATION OF GYPSUM BOARD
3.4.1 Two-Ply Gypsum Board
3.4.2 Not Used
3.4.3 Water-Resistant Gypsum Board
3.4.4 Adhesively-Applied Gypsum Board
3.4.5 Exterior Sheathing
3.5 TRIM, MOLDINGS, AND ACCESSORIES INSTALLATION
3.6 TAPING AND FINISHING
3.7 APPLICATION OF TILE BACKER UNITS
3.8 FIRE-RESISTANT ASSEMBLIES
3.9 PATCHING
3.10 COLUMN COVERS
3.11 CEILING SPRAY TEXTURE

-- End of Section Table of Contents --

SECTION 09250

GYPSUM WALLBOARD
06/97

PART 1 GENERAL

1.1 REFERENCES

The publications listed below form a part of this specification to the extent referenced. The publications are referred to in the text by basic designation only.

AMERICAN NATIONAL STANDARDS INSTITUTE (ANSI)

ANSI A108.11	(1992) Interior Installation of Cementitious Backup Units
ANSI A118.9	(1992) Test Methods and Specifications for Cementitious Backer Units

AMERICAN SOCIETY FOR TESTING AND MATERIALS (ASTM)

ASTM A 580/A 580M	(1998) Stainless Steel Wire
ASTM A 853	(1993) Steel Wire, Carbon, for General Use
ASTM C 36	(1997) Gypsum Wallboard
ASTM C 79/C 79M	(1997) Treated Core and Nontreated Core Gypsum Sheathing Board
ASTM C 475	(1994) Joint Compound and Joint Tape for Finishing Gypsum Board
ASTM C 514	(1996) Nails for the Application of Gypsum Board
ASTM C 557	(1993a) Adhesive for Fastening Gypsum Wallboard to Wood Framing
ASTM C 630/C 630M	(1996a) Water-Resistant Gypsum Backing Board
ASTM C 645	(1998) Nonstructural Steel Framing Members
ASTM C 754	(1997) Installation of Steel Framing Members to Receive Screw-Attached Gypsum Panel Products
ASTM C 840	(1998) Application and Finishing of Gypsum Board
ASTM C 1002	(1998) Steel Drill Screws for the Application of Gypsum Board or Metal Plaster Bases

ASTM C 1047	(1998) Accessories for Gypsum Wallboard and Gypsum Veneer Base

GYPSUM ASSOCIATION (GA)

GA 216	(1996) Application and Finishing of Gypsum Board
GA 600	(1997) Fire Resistance Design Manual

UNDERWRITERS LABORATORIES (UL)

UL Fire Resist Dir	(1998) Fire Resistance Directory

1.2 SYSTEM DESCRIPTION

1.2.1 Fire-Rated Construction

Joints of fire-rated gypsum board enclosures shall be closed and sealed in accordance with UL test requirements or GA requirements, and as required to meet pressurization requirements. Penetrations through rated partitions and ceilings shall be sealed tight in accordance with tested systems. Fire ratings shall be as indicated.

1.3 SUBMITTALS

Government approval is required for submittals with a "GA" designation; submittals having an "FIO" designation are for information only. The following shall be submitted in accordance with Section 01330 SUBMITTAL PROCEDURES:

SD-13 Certificates

Gypsum Wallboard; FIO. Water-Resistant Gypsum Board; FIO. Steel Framing; FIO. Fire-Rated Gypsum Board; FIO; Cementitious Backer Units; FIO.

Certificates stating that the steel framing and gypsum wallboard meet the specified requirements.

SD-14 Samples

Mock-Up; GA. A sample wall area within the project with finished gypsum board, approximately 2438 x 3657mm (8 by 12 feet)in area, containing typical joint finishing, corner bead application and finished surfaces, to establish level of quality finish to be achieved for all gypsum board wall surfaces.

1.4 QUALIFICATIONS

Manufacturer shall specialize in manufacturing the types of material specified and shall have a minimum of 5 years of documented successful experience. Installer shall specialize in the type of gypsum board work required and shall have a minimum of 3 years of documented successful experience.

1.5 DELIVERY, STORAGE AND HANDLING

Materials shall be delivered in original containers bearing the name of

manufacturer, contents, and brand name. Materials shall be stored off the ground in a weathertight structure for protection. Gypsum boards shall be stacked flat, off floor and supported to prevent sagging and warpage. Adhesives and joint materials shall be stored in accordance with manufacturer's printed instructions. Damaged or deteriorated materials shall be removed from jobsite.

1.6 ENVIRONMENTAL CONDITIONS

Environmental conditions for application and finishing of gypsum board shall be in accordance with ASTM C 840. During the application of gypsum board without adhesive, a room temperature of not less than (40 degrees F) shall be maintained. During the application of gypsum board with adhesive, a room temperature of not less than (50 degrees F) shall be maintained for 48 hours prior to application and continuously afterwards until completely dry. Building spaces shall be ventilated to remove water not required for drying joint treatment materials. Drafts shall be avoided during dry hot weather to prevent materials from drying too rapidly.

PART 2 MATERIALS

2.1 NON-LOADBEARING STUD WALLS

2.1.1 Studs

Studs for non-loadbearing walls shall conform to ASTM C 645. Studs shall be C-shaped, roll formed steel with minimum uncoated design thickness of made from G40 hot-dip galvanized coated sheet. Increase stud gauge as required, according to manufacturer's standards, to achieve a maximum allowable deflection of L/360 for all interior partitions types.

2.1.2 Runner Tracks

Floor and ceiling runner tracks shall conform to ASTM C 645. Tracks shall be prefabricated, U-shaped with minimum (1 inch) flanges, unpunched web, thickness to match studs, made from G40 hot-dip galvanized coated sheet.

2.2 SUSPENDED CEILING FRAMING

Suspended ceiling framing system shall have the capability to support the finished ceiling, light fixtures, air diffusers, and accessories, as shown. The suspension system shall have a maximum deflection of L/240. Carrying channels shall be formed from minimum (0.0548 in) thick cold-rolled steel; (1-1/2 x 3/4 inch). Furring members shall be formed from cold-rolled steel; (7/8 x 2-9/16 inch). Carrying channels and furring members shall be made from hot-dip galvanized coated sheet.

2.3 GYPSUM BOARD

Gypsum board shall have square-cut ends, tapered or beveled edges and shall be maximum possible length. Gypsum board thickness shall be as shown.

2.3.1 Standard Gypsum Board

Regular gypsum board shall conform to ASTM C 36, and shall be (48 inches) wide.

2.3.2 Fire-Rated Gypsum Board

Fire-rated gypsum board shall conform to ASTM C 36, and shall be Type X or Type C as required, (48 inches) wide.

2.3.3 Water-Resistant Gypsum Board

Water-resistant gypsum board shall conform to ASTM C 630/C 630M, regular , with water-resistant paper faces, paintable surfaces, and shall be (48 inch) width and maximum permissible length. Provide Type X where part of a rated partition.

2.3.4 Not Used

2.3.5 Not Used

2.3.6 Not Used

2.3.7 Not Used

2.3.8 Exterior Sheathing Board

Exterior sheathing board shall conform to ASTM C1177 and ASTM C 79/C 79M, Type X, shall have water-resistant gypsum core, water-repellant glass mat faces each side and long edges, with square edges, and be (48 inches) wide.

2.4 TRIM, MOLDINGS, AND ACCESSORIES

2.4.1 Taping and Embedding Compound

Taping and embedding compound shall conform to ASTM C 475. Compound shall be specifically formulated and manufactured for use in embedding tape at gypsum wallboard joints and fastener heads, and shall be compatible with tape and substrate.

2.4.2 Finishing or Topping Compound

Finishing or topping compound shall conform to ASTM C 475. Compound shall be specifically formulated and manufactured for use as a finishing compound for gypsum board.

2.4.3 All-Purpose Compound

All-purpose compound shall be specifically formulated and manufactured to use as a taping and finishing compound, and shall be compatible with tape and substrate.

2.4.4 Joint Tape

Joint tape shall conform to ASTM C 475 and shall be as recommended by gypsum board manufacturer.

2.4.5 Trim, Control Joints, Beads, Stops and Nosings

Items used to protect edges, corners, and to provide architectural features shall be in accordance with ASTM C 1047.

2.5 FASTENINGS AND ADHESIVES

2.5.1 Nails

Nails shall conform to ASTM C 514. Nails shall be hard-drawn low or medium-low carbon steel, suitable for intended use.

2.5.2 Screws

Screws shall conform to ASTM C 1002. Screws shall be self-drilling and self-tapping steel, Type G for gypsum board to gypsum board Type S for light-gauge steel framing.

2.5.3 Adhesives

Adhesives shall conform to ASTM C 557. For securing gypsum board to metal framing, adhesive shall be as recommended by gypsum board manufacturer.

2.5.4 Hangers

Suspended ceiling runner channel hangers shall be soft, annealed steel wire not less than No. 8 SWG, conforming to ASTM A 853 or flat iron or steel straps, at least (3/32 x 7/8 inch) size, coated with zinc, cadmium, or rust-inhibiting paint.

2.5.5 Wire and Clip Type Fastenings

Tie wire, clips, rings, and other fastenings shall be corrosion-resisting steel conforming to ASTM A 580/A 580M, composition 302, 304, or 316, Condition A, except that walls, partitions, and other vertical surfaces not incorporated in ceiling construction may be erected with soft, annealed steel conforming to ASTM A 853.

2.5.5.1 Tie Wire

Tie wire for constructing partitions and vertical furring, for securing metal lath to supports, and for lacing shall be not less than No. 18 SWG. Tie wire for other applications shall be not less than No. 16 SWG.

2.5.5.2 Clips

Clips used in lieu of tie wire for securing the furring channels to the runner channels in ceiling construction shall be made from strip not less than (1/8 inch) thick or shall be hairpin clip, formed of wire not less than (0.01620 inch) nominal diameter. Other clips and rings or fastenings of similar materials shall be equivalent in holding power to that provided by tie wire for the specific application.

2.6 TILE BACKER UNITS

Tile backer units shall comply with ANSI A118.9 and shall be 13 mm (1/2 inch) thick, fiber reinforced concrete panels. Alternately, tile backer units may be composed of a 13 mm (1/2 inch)thick, water-resistant treated core with glass mat moisture resistant coating, and face side surfaced with heat-cured water- and vapor-retardant coating (equivalent to Georgia Pacific's DensShield).

2.7 COLUMN COVERS

Interior column covers shall be factory fabricated components composed of high density gypsum, reinforced with continuous filament random glass fiber matt. Chopped strand fiber reinforcing is not permitted. Shell thickness shall be 3 to 5 mm (1/8 to 3/16 inches) thick; weight shall be a maximum of .91

kg./0.09 sm (2 lbs./sq.ft.); and compressive strength shall be between 29 to 31 MPa (4200 and 4500 psi). Components shall be reinforced with steel or wood and shall be ready to receive primer and paint in accordance with Section 09915 COLOR SCHEDULE.

2.8 CEILING SPRAY TEXTURE

Ceiling spray texture shall be formulated with polystyrene aggregate for spray application in medium texture to produce acoustical finish appearance on precast concrete and gypsum board ceilings. High hide finish shall not require overpainting. Formula shall have a maximum flame spread rating of 10 and smoke developed rating of 25 or less. Provide manufacturer's recommended primer as basecoat for all ceiling surfaces scheduled to receive spray texture.

PART 3 EXECUTION

3.1 INTERIOR WALL FRAMING

Steel framing and furring members shall be installed in accordance with ASTM C 754. Members shall be in alignment with spacings not to exceed the maximum spacings indicated on drawings. Runners shall be aligned accurately at the floor and ceiling and securely anchored.

3.1.1 Wall Openings

The framing system shall provide for the installation and anchorage of the required subframes or finish frames for wall openings at doors, pass-through openings, and access panels. Partitions abutting continuous suspended ceilings shall be strengthened for rigidity at rough openings of more than (30 inches) wide. Studs at openings shall be minimum bare metal thickness and spot grouted at jamb anchor inserts. Double studs shall be fastened together with screws and secured to floor and overhead runners. Two studs shall be used for framing solid-core doors, doors over (36 inches) wide and extra-heavy doors .

3.1.2 Wall Control Joints

Control joints for expansion and contraction in the walls shall be constructed with double studs installed (1/2 inch) apart in interior walls or wall furrings where indicated on drawings. Control joint spacing shall not exceed (30 feet). Ceiling-height door frames may be used as vertical control joints. Door frames of less than ceiling height may be used as control joints only if standard control joints extend to ceiling from both corners of top of door frame. Control joints between studs shall be filled with firesafing insulation in fire rated partitions.

3.1.3 Blocking

Blocking shall be provided as necessary for mounted equipment. Blocking shall be metal or wood and shall be cut to fit between framing members. Blocking shall be rigidly anchored to the framing members. Under no circumstances will accessories or other wall mounted equipment be anchored directly to gypsum wallboard.

3.2 Not Used

3.3 SUSPENDED CEILING FRAMING

Suspended ceiling system framing shall be installed in accordance with ASTM C 754.

3.3.1 Hangers

Hangers shall be spaced not more than (48 inches) along runner channels and (36 inches) in the other direction or (42 inches) in both directions unless otherwise indicated. Locations of hanger wires shall be coordinated with other work. Hangers at ends of runner channels shall be located not more than (6 inches) from wall. Hanger wire shall be looped around bottom chord of open-web steel joists, or secured to structural elements with suitable fasteners. Sags or twists which develop in the suspended system shall be adjusted. Damaged or faulty parts shall be replaced.

3.3.2 Main Runners

Main runner channels shall be installed in accordance with ASTM C 754. Hanger wires shall be double strand saddle-tied to runner channels and the ends of hanger wire shall be twisted three times around itself. Main runners shall be located to within (6 inches) of the paralleling wall to support the ends of cross furring. Main runners shall not come in contact with abutting masonry or concrete walls. Where main runners are spliced, ends shall be overlapped (12 inches) with flanges of channels interlocked, and shall be securely tied at each end of splice with wire looped twice around the channels.

3.3.3 Furring Channels

Furring channels shall be spaced in accordance with ASTM C 754. Furring channels shall be secured to the runner channels and to structural supports at each crossing with tie wire, hairpin clips, or equivalent fastenings. Furring channels shall be located within (2 inches) of parallel walls and beams, and shall be cut (1/2 inch) short of abutting walls.

3.3.4 Ceiling Openings

Support members shall be provided as required at ceiling openings for access panels, recessed light fixtures, and air supply or exhaust. Support members shall be not less than (1-1/2 inch) main runner channels and vertically installed suspension wires or straps shall be located to provide at least the minimum support specified herein for furring and wallboard attachment. Intermediate structural members not a part of the structural system, shall be provided for attachment or suspension of support members.

3.3.5 Light Fixtures and Air Diffusers

Light fixtures and air diffusers shall be supported directly from suspended ceiling runners. Wires shall be provided at appropriate locations to carry the weight of recessed or surface mounted light fixtures and air diffusers.

3.3.6 Control Joints

Ceiling control joints for expansion and contraction shall be located where indicated on drawings. A control joint or intermediate blocking shall be installed where ceiling framing members change direction.

3.3.6.1 Interior Ceilings With Perimeter Relief

Control joints shall be installed so that linear dimensions between control

joints shall not exceed (50 feet) in either direction nor more than (2500 square feet).

3.3.6.2 Interior Ceilings Without Perimeter Relief

Control joints shall be installed so that linear dimensions between control joints shall not exceed (30 feet) in either direction nor more than (900 square feet).

3.4 APPLICATION OF GYPSUM BOARD

Gypsum board shall be installed in accordance with ASTM C 840 and GA 216 and as specified. Paragraph 17.3.1 GENERAL of ASTM C 840 which permits usage of water resistant gypsum board as a base for adhesive application of ceramic or plastic tile on ceilings, does not apply. Edges and ends of gypsum boards shall be cut to obtain neat fitting joints. End joints of adjoining boards shall be staggered, and shall be staggered on opposite sides of wall. Boards shall be applied with moderate contact without forcing in place. Holes for pipes, fixtures or other small openings shall be cut with a tool which will provide a neat fit. Screws shall be driven so that the heads are slightly below the plane of paper face. Fracturing the paper face or damaging the core shall be avoided. Trim shall be installed at external and internal angles formed by the intersecting gypsum board surfaces with other surfaces. Corner beads shall be installed to vertical and horizontal corners in accordance with manufacturer's published instructions.

3.4.1 Two-Ply Gypsum Board

Second layer of gypsum board shall be applied perpendicular to first layer with joints staggered and secured with mechanical fasteners.

3.4.2 Not Used

3.4.3 Water-Resistant Gypsum Board

Water-resistant gypsum board shall be installed at walls located in toilet rooms which are scheduled to be painted and at locations indicated.

3.4.4 Adhesively-Applied Gypsum Board

Walls to receive adhesively-applied gypsum board shall be dry, free of dust, oil, or form release agents, protrusions or voids, or foreign matter that would affect a proper bond.

3.4.5 Exterior Sheathing

Exterior sheathing shall be flashed at openings so that water intrusion will not contact the sheathing. Vertical end and edge joints shall abut over the centers of framing members and shall be offset a minimum of one framing space between adjacent rows of gypsum sheathing. If sheathing is installed and exposed to the elements for more than one month, joints shall be taped with fiberglass tape embedded in sealant. Sheathing and accessories shall be installed in accordance with manufacturer's instructions.

3.5 TRIM, MOLDINGS, AND ACCESSORIES INSTALLATION

Trim, moldings and accessories shall be installed in accordance with GA 216.

3.6 TAPING AND FINISHING

Gypsum board taping and finishing shall be performed in accordance with ASTM C 840. Boards shall be kept free of dirt, oil and other foreign matter that could cause a lack of bond. Screw heads, dents, gouges, and cut-outs shall be filled with joint compound and sanded. Accessories at exposed joints, edges, corners, openings, and similar locations shall be taped, floated with joint compound, and sanded to produce surfaces ready for gypsum board finishes.

3.7 APPLICATION OF TILE BACKER UNITS

Tile backer units shall be provided in lieu of gypsum board and substrate for all plumbing walls scheduled to receive ceramic tile, at interior applications of stone veneer, and as indicated. Cementitious tile backer units shall be installed in accordance with ANSI A108.11. Fasteners shall be the type designed for board application and as approved by board manufacturer.

3.8 FIRE-RESISTANT ASSEMBLIES

Gypsum wallboard construction for fire-rated assemblies shall be in accordance with UL Fire Resist Dir, or GA 600 for the design number indicated on drawings.

3.9 PATCHING

Surface defects and damage shall be corrected as required to leave gypsum board smooth, uniform in appearance, and ready to receive finish as specified.

3.10 COLUMN COVERS

Column covers shall be installed according to manufacturer's recommendations. Components shall be fasten with self drilling, self tapping bugle head screws through face or back. Joints shall be taped, filled and sanded in preparation for field finishing.

3.11 CEILING SPRAY TEXTURE

Remove all oils, grease and other deposits from concrete surfaces. Finish patched or repaired areas to provide a uniform texture and surface. Grind down any ridges or other protrusions resulting from forms or other causes to the same level as adjacent surfaces. Apply filler as required to provide a smooth, level surface, free of irregularities. When all surfaces are prepared and dry, apply primer coat. Apply finishing spray texture material to blend uniformly and cover fully without starved spots or other evidence of thin application. Provide uniform texture without application patterns. Remove any texture droppings or overspray from walls, windows and floors.

-- End of Section --

This page was intentionally left blank for duplex printing.

SECTION TABLE OF CONTENTS

DIVISION 09 - FINISHES

SECTION 09310

CERAMIC TILE

07/98

PART 1 GENERAL

1.1 REFERENCES
1.2 SUBMITTALS
1.3 DELIVERY AND STORAGE
1.4 ENVIRONMENTAL REQUIREMENTS
1.5 WARRANTY

PART 2 PRODUCTS

2.1 TILE
2.1.1 Floor Tile
2.1.2 Glazed Wall Tile
2.2 Not Used
2.3 WATER
2.4 MORTAR, GROUT, AND ADHESIVE
2.4.1 Dry-Set Portland Cement Mortar
2.4.2 Not Used
2.4.3 Latex-Portland Cement Mortar
2.4.4 Ceramic Tile Grout
2.5 THRESHOLDS
2.6 METAL EDGE STRIP
2.7 CLEAVAGE MEMBRANE
2.8 WATERPROOF MEMBRANE
2.9 SEALER

PART 3 EXECUTION

3.1 PREPARATORY WORK AND WORKMANSHIP
3.2 GENERAL INSTALLATION REQUIREMENTS
3.3 INSTALLATION OF WALL TILE
3.3.1 Not Used
3.3.2 Dry-Set Mortar and Latex-Portland Cement Mortar
3.4 INSTALLATION OF FLOOR TILE
3.4.1 Not Used
3.4.2 Dry-Set and Latex-Portland Cement
3.4.3 Not Used
3.4.4 Ceramic Tile Grout
3.4.5 Not Used
3.4.6 Not Used
3.4.7 Metal Edge Strips
3.4.8 Cleavage Membrane
3.4.9 Waterproof Membrane
3.5 Not Used
3.6 INSTALLATION OF MARBLE THRESHOLDS
3.7 Not Used

3.8 EXPANSION JOINTS
3.8.1 Walls
3.9 CLEANING AND PROTECTING

-- End of Section Table of Contents --

SECTION 09310

CERAMIC TILE
07/98

PART 1 GENERAL

1.1 REFERENCES

The publications listed below form a part of this specification to the extent referenced. The publications are referred to in the text by basic designation only.

AMERICAN NATIONAL STANDARDS INSTITUTE (ANSI)

ANSI A108.1A	(1992) Installation of Ceramic Tile in the Wet-Set Method, with Portland Cement Mortar
ANSI A108.1B	(1992) Installation of Ceramic Tile on a Cured Portland Cement Mortar Setting Bed with Dry-Set or Latex Portland Cement Mortar
ANSI A108.5	(1992) Installation of Ceramic Tile with Dry-Set Portland Cement Mortar or Latex-Portland Cement Mortar
ANSI A108.10	(1992) Installation of Grout in Tilework
ANSI A118.1	(1992) Dry-Set Portland Cement Mortar
ANSI A118.4	(1992) Latex-Portland Cement Mortar
ANSI A118.6	(1992) Ceramic Tile Grouts
ANSI A137.1	(1988) Ceramic Tile

AMERICAN SOCIETY FOR TESTING AND MATERIALS (ASTM)

ASTM C 373	(1988; R 1994) Water Absorption, Bulk Density, Apparent Porosity, and Apparent Specific Gravity of Fired Whiteware Products
ASTM C 648	(1984; R 1994) Breaking Strength of Ceramic Tile
ASTM C 1026	(1987; R 1996) Measuring the Resistance of Ceramic Tile to Freeze-Thaw Cycling
ASTM C 1027	(1984; R 1990) Determining Visible Abrasion Resistance of Glazed Ceramic Tile
ASTM C 1028	(1996) Determining the Static Coefficient of Friction of Ceramic Tile and Other Like

Surfaces by the Horizontal Dynamometer Pull-Meter Method

TILE COUNCIL OF AMERICA (TCA)

TCA Hdbk (1997) Handbook for Ceramic Tile Installation

1.2 SUBMITTALS

Government approval is required for submittals with a "G" designation; submittals not having a "G" designation are for information only. When used, a designation following the "G" designation identifies the office that will review the submittal for the Government. The following shall be submitted in accordance with Section 01330 SUBMITTAL PROCEDURES:

SD-03 Product Data

Tile;
Setting-Bed;
Mortar, Grout, and Adhesive;

Manufacturer's catalog data including instructions for care and maintenance of the ceramic tile surfaces.

SD-04 Samples

Tile; G-AE
Accessories; G-AE

Samples of sufficient size to show color range, pattern, type and joints.

1.3 DELIVERY AND STORAGE

Materials shall be delivered to the project site in manufacturer's original unopened containers with seals unbroken and labels and hallmarks intact. Materials shall be kept dry, protected from weather, and stored under cover in accordance with manufacturer's instructions.

1.4 ENVIRONMENTAL REQUIREMENTS

Ceramic tile work shall not be performed unless the substrate and ambient temperature is at least (50 degrees F) and rising. Temperature shall be maintained above (50 degrees F) while the work is being performed and for at least 7 days after completion of the work. When temporary heaters are used they shall be vented to the outside to avoid carbon dioxide damage to new tilework.

1.5 WARRANTY

Manufacturer's standard performance guarantees or warranties that extend beyond a 1-year period shall be provided.

PART 2 PRODUCTS

2.1 TILE

Tile shall be standard grade conforming to ANSI A137.1. Containers shall

be grade sealed. Seals shall be marked to correspond with the marks on the signed master grade certificate. Tile shall be impact resistant with a minimum breaking strength for wall tile of 41 kg (90 lbs) and 113 kg (250 lbs) for floor tile in accordance with ASTM C 648. Tile for cold climate projects shall be rated frost resistant by the manufacturer as determined by ASTM C 1026. Floor tile water absorption shall be 0.50 maximum percent in accordance with ASTM C 373. Floor tile shall have a minimum coefficient of friction of 0.60 wet and dry in accordance with ASTM C 1028. Floor tile shall be Class IV-Heavy Traffic, durability classification as rated by the manufacturer when tested in accordance with ASTM C 1027for abrasion resistance as related to foot traffic.

2.1.1 Floor Tile

T-1: Not Used

CT-2: Ceramic mosaic tile and trim shall be unglazed, unpolished with sharply formed face. Tile size shall be (2 x 2 inches). Color shall be in accordance with Section 09915 COLOR SCHEDULE.

2.1.2 Glazed Wall Tile

CT-3: Glazed wall tile, base and trim shall be cushion edged with bright glaze. Tile shall be (6 x 6) inches. Color shall be in accordance with Section 09915 COLOR SCHEDULE.

2.2 Not Used

2.3 WATER

Water shall be potable.

2.4 MORTAR, GROUT, AND ADHESIVE

Mortar, grout, and adhesive shall conform to the following:

2.4.1 Dry-Set Portland Cement Mortar

ANSI A118.1.

2.4.2 Not Used

2.4.3 Latex-Portland Cement Mortar

ANSI A118.4.

2.4.4 Ceramic Tile Grout

ANSI A118.6; latex-portland cement grout, wall and floor types. Color shall be in accordance with Section 09915 COLOR SCHEDULE.

2.5 THRESHOLDS

Thresholds shall be provided at transitions between ceramic tile and carpet at all guest room/suite bathrooms. All other locations shall use metal edge strip per paragraph 2.6. Threshold size shall be 50 mm (2 inches) wide with 5 mm (3/16 inch) beveled edges, in depth as required by conditions. Threshold shall be of a solid surfacing material equivalent to Corian, with a fine sand-rubbed finish. Color shall be in accordance with Section 09915

COLOR SCHEDULE.

2.6 METAL EDGE STRIP

Zinc (white metal) terrazzo edging strip with 3 mm (1/8 inch) exposed top face, and overall height to accommodate tile thickness and floor conditions. Edge strip shall be flush with tile surface and is to be provided at all transitions between porcelain tile (T-1) and carpet in lobbies, corridors, and guest room/suite entrance doors.

2.7 CLEAVAGE MEMBRANE

Per ASNI A108.1A. Provide around columns where structural construction or control joints do not align with architectural control joint layout indicated for tile on drawings.

2.8 WATERPROOF MEMBRANE

Provide liquid based, trowel applied, moisture curing urethane membrane below all ceramic and porcelain floor tile in bathrooms and vending areas on Floors 2,3,and 4. Waterproof membrane to be equivalent to Hydroment Ultra-Set, and shall meet the requirements of ANSI A118.10.

2.9 SEALER

Provide penetrating sealer for all ceramic tile floor surfaces in bathrooms and vending areas. Sealer to be a heavy duty, water-based water repelling sealer similar to "Water Block" as manufactured by Stonetec.

PART 3 EXECUTION

3.1 PREPARATORY WORK AND WORKMANSHIP

Surface to receive tile shall be inspected and shall conform to the requirements of ANSI A108.1A or ANSI A108.1B for surface conditions for the type setting bed specified and for workmanship. Variations of surface to be tiled shall fall within maximum values shown below:

3.2 GENERAL INSTALLATION REQUIREMENTS

Tile work shall not be started until roughing in for mechanical and electrical work has been completed and tested, and built-in items requiring membrane waterproofing have been installed and tested. Floor tile installation shall not be started in spaces requiring wall tile until after wall tile has been installed. Floor tile joints are to align with wall tile joints where ever possible. Tile in colors and patterns indicated shall be applied in the area shown on the drawings. Tile shall be installed with the respective surfaces in true even planes to the elevations and grades shown. Special shapes shall be provided as required for sills, jambs, recesses, offsets, external corners, and other conditions to provide a complete and neatly finished installation. Tile bases and coves shall be solidly backed with mortar.

3.3 INSTALLATION OF WALL TILE

Wall tile shall be installed in accordance with TCA Hdbk, method W202 at concrete masonry walls; method W243 at metal stud walls with gypsum board substrate, and method W244 at metal stud walls with cementitious tile backer substrate.

3.3.1 Not Used

3.3.2 Dry-Set Mortar and Latex-Portland Cement Mortar

Dry-set or Latex-portland cement shall be used to install tile in accordance with ANSI A108.5. Latex portland cement shall be used when installing porcelain ceramic tile.

3.4 INSTALLATION OF FLOOR TILE

Floor tile shall be installed in accordance with TCA Hdbk, method F113.

3.4.1 Not Used

3.4.2 Dry-Set and Latex-Portland Cement

Dry-set or latex-portland cement mortar shall be used to install tile directly over properly cured, plain, clean concrete slabs in accordance with ANSI A108.5. Latex portland cement shall be used when installing porcelain tile.

3.4.3 Not Used

3.4.4 Ceramic Tile Grout

Ceramic Tile grout shall be prepared and installed in accordance with ANSI A108.10.

3.4.5 Not Used

3.4.6 Not Used

3.4.7 Metal Edge Strips

Secure edge strips to concrete substrate at tile perimeter and openings, prior to installing grout.

3.4.8 Cleavage Membrane

Install membrane in recommended width 600 mm (24 inches) centered over joint in substrate.

3.4.9 Waterproof Membrane

Apply liquid membrane 30 mils thick with a trowel over concrete substrate. Install tile over the cured membrane in accordance with manufacturer's recommendations.

3.5 Not Used

3.6 INSTALLATION OF MARBLE THRESHOLDS

Thresholds shall be installed in a manner similar to that of the ceramic tile floor. Thresholds shall be the full width of the opening and positioned to be directly under the door.. Head joints at ends shall not exceed (1/4 inch) in width and shall be grouted full as specified for ceramic tile.

3.7 Not Used

3.8 EXPANSION JOINTS

Joints shall be formed as indicated and sealed as specified in Section 07900 JOINT SEALING.

3.8.1 Walls

Expansion joints shall be provided at control joints in backing material. Wherever backing material changes, an expansion joint shall be installed to separate the different materials.

3.9 CLEANING AND PROTECTING

Upon completion, tile floor surfaces shall be thoroughly cleaned in accordance with manufacturer's approved cleaning instructions. Acid shall not be used for cleaning glazed tile. Floor tile with resinous grout or with factory mixed grout shall be cleaned in accordance with instructions of the grout manufacturer and sealed to prevent or minimize staining. Apply two coats of sealer in accordance with manufacturer's application instructions. Protect sealed floor surfaces until sealer has fully cured.

After the grout has set, tile wall surfaces shall be given a protective coat of a noncorrosive soap or other approved method of protection. Tiled floor areas shall be covered with building paper before foot traffic is permitted over the finished tile floors. Board walkways shall be laid on tiled floors that are to be continuously used as passageways by workmen. Damaged or defective tiles shall be replaced.

-- End of Section --

SECTION TABLE OF CONTENTS

DIVISION 09 - FINISHES

SECTION 09510

ACOUSTICAL CEILINGS

08/96

PART 1 GENERAL

1.1 REFERENCES
1.2 GENERAL REQUIREMENTS
1.3 SUBMITTALS
1.4 DELIVERY AND STORAGE
1.5 ENVIRONMENTAL REQUIREMENTS
1.6 SCHEDULING
1.7 WARRANTY
1.8 EXTRA MATERIALS

PART 2 PRODUCTS

2.1 ACOUSTICAL UNITS
2.1.1 Units for Exposed-Grid System
2.2 SUSPENSION SYSTEM
2.3 HANGERS
2.4 Not Used
2.5 Not Used
2.6 FINISHES
2.7 COLORS
2.8 CEILING ATTENUATION CLASS AND TEST
2.9 Not Used

PART 3 EXECUTION

3.1 INSTALLATION
3.1.1 Suspension System
3.1.1.1 Plumb Hangers
3.1.2 Wall Molding
3.1.3 Acoustical Units
3.2 Not Used
3.3 CLEANING

-- End of Section Table of Contents --

SECTION 09510

ACOUSTICAL CEILINGS
08/96

PART 1 GENERAL

1.1 REFERENCES

The publications listed below form a part of this specification to the extent referenced. The publications are referred to in the text by basic designation only.

AMERICAN SOCIETY FOR TESTING AND MATERIALS (ASTM)

ASTM C 635	(1995) Manufacture, Performance, and Testing of Metal Suspension Systems for Acoustical Tile and Lay-In Panel Ceilings
ASTM C 636	(1996) Installation of Metal Ceiling Suspension Systems for Acoustical Tile and Lay-In Panels
ASTM E 1264	(1990) Standard Classification for Acoustical Ceiling Products
ASTM E 1414	(1991a) Standard Test for Airborne Sound Attenuation Between Rooms Sharing a Common Ceiling Plenum

1.2 GENERAL REQUIREMENTS

Acoustical treatment shall consist of sound controlling units mechanically mounted on a ceiling suspension system. The unit size, texture, finish, and color shall be as specified. The location and extent of acoustical treatment shall be as shown on the drawings.

1.3 SUBMITTALS

Government approval is required for submittals with a "G" designation; submittals not having a "G" designation are for information only. When used, a designation following the "G" designation identifies the office that will review the submittal for the Government. The following shall be submitted in accordance with Section 01330 SUBMITTAL PROCEDURES:

SD-03 Product Data

Acoustical Ceiling System;
Spray Applied Acoustical Treament;

Manufacturer's descriptive data, catalog cuts, and installation instructions.

SD-04 Samples

Acoustical Units; FIO.

Spray Applied Acoustical Treament;

Two samples of each type of acoustical unit and each type of suspension grid tee section showing texture, finish, and color.

1.4 DELIVERY AND STORAGE

Materials shall be delivered to the site in the manufacturer's original unopened containers with brand name and type clearly marked. Materials shall be carefully handled and stored in dry, watertight enclosures. Immediately before installation, acoustical units shall be stored for not less than 24 hours at the same temperature and relative humidity as the space where they will be installed in order to assure proper temperature and moisture acclimation.

1.5 ENVIRONMENTAL REQUIREMENTS

A uniform temperature of not less than (60 degrees F) nor more than (85 degrees F) and a relative humidity of not more than 70 percent shall be maintained before, during, and after installation of acoustical units.

1.6 SCHEDULING

Interior finish work such as plastering, concrete and terrazzo work shall be complete and dry before installation. Mechanical, electrical, and other work above the ceiling line shall be completed and heating, ventilating, and air conditioning systems shall be installed and operating in order to maintain temperature and humidity requirements.

1.7 WARRANTY

Manufacturer's standard performance guarantees or warranties that extend beyond a one year period shall be provided.

1.8 EXTRA MATERIALS

Spare tiles of each color shall be furnished at the rate of 5 tiles for each 1000 tiles installed. Tiles shall be from the same lot as those installed.

PART 2 PRODUCTS

2.1 ACOUSTICAL UNITS

Acoustical units shall conform to ASTM E 1264, Class A, and the following requirements:

2.1.1 Units for Exposed-Grid System

Notwithstanding Section 00700 CONTRACT CLAUSES FAR 52.236-5, Material and Workmanship, the Carpet shall be manufactured as described in SECTION 09915 COLOR SCHEDULE in order to be fully compatible with and interface with the existing Phase 3 Lodging facility. No other products will be acceptable. The competition Advocate authorizes sole source procurement.

Type: "Aspen" by USG Interiors (Item No.650), to match Phase Three ceiling tile; Class A, NRC of .55 and minimum CAC of 35.

Nominal size: 600 by 600 mm by 19 mm thick. (24 by 24 inches by 3/4 inch

thick).

Edge detail: Angled tegular edge (20 degrees) with field tegularized perimeter installation detail.

Finish: Factory-applied standard finish.

2.2 SUSPENSION SYSTEM

Suspension system shall be exposed standard width flange, and shall conform to ASTM C 635 for intermediate-duty systems. Surfaces exposed to view shall be aluminum or steel with a factory-applied white baked-enamel finish . Wall molding shall have a flange of not less than 3 mm (15/16 inch). Standard corners shall be provided. Suspended ceiling framing system shall have the capability to support the finished ceiling, light fixtures, air diffusers, and accessories, as shown. The suspension system shall have a maximum deflection of 1/360 of span length.

2.3 HANGERS

Hangers shall be galvanized steel wire. Hangers and attachment shall support a minimum (300 pound) ultimate vertical load without failure of supporting material or attachment.

2.4 Not Used

2.5 Not Used

2.6 FINISHES

Acoustical unit finish shall match the acoustical units used in the existing Phase 3 building. Suspension system members shall have manufacturer's standard finish. Ceiling suspension system components shall be treated to inhibit corrosion.

2.7 COLORS

Colors for acoustical units and suspension system components shall be as specified in Section 09915 COLOR SCHEDULE.

2.8 CEILING ATTENUATION CLASS AND TEST

Ceiling attenuation class (CAC) range of acoustical units, when required, shall be determined in accordance with ASTM E 1414. Test ceiling shall be continuous at the partition and shall be assembled in the suspension system in the same manner that the ceiling will be installed on the project. System shall be tested with all acoustical units installed.

2.9 Not Used

PART 3 EXECUTION

3.1 INSTALLATION

Acoustical work shall be provided complete with necessary fastenings, clips, and other accessories required for a complete installation. Mechanical fastenings shall not be exposed in the finished work. Hangers shall be laid out for each individual room or space. Hangers shall be placed to support framing around beams, ducts, columns, grilles, and other

penetrations through ceilings. Main runners and carrying channels shall be kept clear of abutting walls and partitions. At least two main runners shall be provided for each ceiling span. Wherever required to bypass an object with the hanger wires, a sub suspension system shall be installed, so that all hanger wires will be plumb.

3.1.1 Suspension System

Suspension system shall be installed in accordance with ASTM C 636 and as specified herein. There shall be no hanger wires or other loads suspended from underside of steel decking.

3.1.1.1 Plumb Hangers

Hangers shall be plumb and shall not press against insulation covering ducts and pipes.

3.1.2 Wall Molding

Wall molding shall be provided where ceilings abut vertical surfaces. Wall molding shall be secured not more than (3 inches) from ends of each length and not more than (16 inches) on centers between end fastenings. Wall molding springs shall be provided at each acoustical unit in semi-exposed or concealed systems.

3.1.3 Acoustical Units

Acoustical units shall be installed in accordance with the approved installation instructions of the manufacturer. Edges of acoustical units shall be in close contact with metal supports, with each other, and in true alignment. Acoustical units shall be arranged so that units less than one-half width are minimized. Units in exposed-grid system shall be held in place with manufacturer's standard hold-down clips, if units weigh less than (1 psf) or if required for fire resistance rating.

3.2 Not Used

3.3 CLEANING

Following installation, dirty or discolored surfaces of acoustical units shall be cleaned and left free from defects. Units that are damaged or improperly installed shall be removed and new units provided as directed.

-- End of Section --

This page was intentionally left blank for duplex printing.

SECTION TABLE OF CONTENTS

DIVISION 09 - FINISHES

SECTION 09650

RESILIENT FLOORING

07/96

PART 1 GENERAL

1.1 REFERENCES
1.2 FIRE RESISTANCE REQUIREMENTS
1.3 SUBMITTALS
1.4 DELIVERY AND STORAGE
1.5 ENVIRONMENTAL REQUIREMENTS
1.6 SCHEDULING
1.7 WARRANTY
1.8 EXTRA MATERIALS

PART 2 PRODUCTS

2.1 VINYL-COMPOSITION TILE
2.2 Not Used
2.3 RUBBER FLOORING TYPE
2.3.1 Rubber Tile
2.3.2 Stair Treads, Risers and Landings
2.4 Not Used
2.5 RESILIENT BASE
2.6 Not Used
2.7 TRANSITION STRIP
2.8 ADHESIVE
2.9 POLISH
2.10 CAULKING AND SEALANTS
2.11 MANUFACTURER'S COLOR AND TEXTURE

PART 3 EXECUTION

3.1 EXAMINATION/VERIFICATION OF CONDITIONS
3.2 SURFACE PREPARATION
3.3 MOISTURE TEST
3.4 INSTALLATION OF VINYL-COMPOSITION TILE
3.5 INSTALLATION OF RUBBER FLOORING
3.6 Not Used
3.7 INSTALLATION OF RESILIENT BASE
3.8 INSTALLATION OF TREADS AND RISERS
3.9 CLEANING
3.10 PROTECTION

-- End of Section Table of Contents --

SECTION 09650

RESILIENT FLOORING
07/96

PART 1 GENERAL

1.1 REFERENCES

The publications listed below form a part of this specification to the extent referenced. The publications are referred to in the text by basic designation only.

AMERICAN SOCIETY FOR TESTING AND MATERIALS (ASTM)

ASTM D 2240	(1997) Rubber Property - Durometer Hardness
ASTM D 4078	(1992; R 1996) Water Emulsion Floor Polish
ASTM E 84	(1997) Surface Burning Characteristcs of Building Materials
ASTM E 648	(1997) Critical Radiant Flux of Floor-Covering Systems Using a Radiant Heat Energy Source
ASTM F 1066	(1995a) Vinyl Composition Floor Tile
ASTM F 1344	(1993) Rubber Floor Tile

1.2 FIRE RESISTANCE REQUIREMENTS

Flooring in corridors and exits shall have a minimum average critical radiant flux of 0.45 watts per square centimeter when tested in accordance with ASTM E 648. The smoke density rating shall be less than 450 when tested in accordance with ASTM E 662

1.3 SUBMITTALS

Government approval is required for submittals with a "G" designation; submittals not having a "G" designation are for information only. When used, a designation following the "G" designation identifies the office that will review the submittal for the Government. The following shall be submitted in accordance with Section 01330 SUBMITTAL PROCEDURES:

SD-03 Product Data

Resilient Flooring and Accessories;

Manufacturer's descriptive data and installation instructions including cleaning and maintenance instructions.

SD-06 Test Reports

Resilient Flooring and Accessories;

Copies of test reports showing that representative product samples of the flooring proposed for use have been tested by an independent testing laboratory within the past three years or when formulation change occurred and conforms to the requirements specified.

SD-04 Samples

Resilient Flooring and Accessories; G-AE

Seven samples of each indicated color and type of flooring and base. Sample size shall be minimum (2-1/2 x 4) inches.

1.4 DELIVERY AND STORAGE

Materials shall be delivered to the building site in original unopened containers bearing the manufacturer's name, project identification, and handling instructions. Materials shall be stored in a clean dry area with temperature maintained above (70 degrees F) for 2 days prior to installation, and shall be stacked according to manufacturer's recommendations. Materials shall be protected from the direct flow of heat from hot-air registers, radiators and other heating fixtures and appliances.

1.5 ENVIRONMENTAL REQUIREMENTS

Areas to receive resilient flooring shall be maintained at a temperature above (70 degrees F) and below (100 degrees F) for 2 days before application, during application and 2 days after application. A minimum temperature of (55 degrees F) shall be maintained thereafter.

1.6 SCHEDULING

Resilient flooring application shall be scheduled after the completion of other work which would damage the finished surface of the flooring.

1.7 WARRANTY

Manufacturer's standard performance guarantees or warranties that extend beyond a one year period shall be provided.

1.8 EXTRA MATERIALS

Extra flooring material of each color and pattern shall be furnished at the rate of1% of installed floor area for each type of tile. Extra materials shall be from the same lot as those installed. Extra base material composed of (20 linear feet) of each color shall be furnished.

PART 2 PRODUCTS

2.1 VINYL-COMPOSITION TILE

Vinyl-composition tile shall conform to ASTM F 1066, Class 2,(through pattern tile), Composition 1, asbestos-free, and shall be square and thick. Tile shall have the color and pattern uniformly distributed throughout the thickness of the tile. Flooring in any one continuous area shall be from the same lot and shall have the same shade and pattern.

2.2 Not Used

2.3 RUBBER FLOORING TYPE

2.3.1 Rubber Tile

Rubber tile shall conform to ASTM F 1344 Class 1 homogeneous construction, Type A (solid color) Class A, and shall meet requirements for a Class A finish per ASTM E 84. Durometer hardness shall be not less than 90, when tested in accordance with ASTM D 2240. Tile shall be Surface shall be raised round studs with chamfered edges. Overall thickness at treads shall be not less than . Stud profile shall be 0.5 mm (0.02 inches) high.

2.3.2 Stair Treads, Risers and Landings

Treads, risers, and landing material shall conform to 2.3.1 Rubber Tile. Stair tread/nosing/riser design shall be one piece. Installation shall include matching landing surface and trim.

2.4 Not Used

2.5 RESILIENT BASE

Base shall be manufacturers standard vinyl, straight style (installed with carpet) coved style (installed with resilient flooring). Base shall be high and a minimum inch thick. Job Formed corners shall be furnished.

2.6 Not Used

2.7 TRANSITION STRIP

A vinyl or rubber transition strip (to match flooring material and color), tapered to meet abutting material, shall be provided.

2.8 ADHESIVE

Adhesive for flooring and wall base shall be as recommended by the flooring manufacturer.

2.9 POLISH

Polish shall conform to ASTM D 4078.

2.10 CAULKING AND SEALANTS

Caulking and sealants shall be in accordance with Section 07900 JOINT SEALING.

2.11 MANUFACTURER'S COLOR AND TEXTURE

Color and texture shall be in accordance with Section 09915 COLOR SCHEDULE.

PART 3 EXECUTION

3.1 EXAMINATION/VERIFICATION OF CONDITIONS

The Contractor shall examine and verify that site conditions are in agreement with the design package and shall report all conditions that will

prevent a proper installation. The Contractor shall not take any corrective action without written permission from the Government.

3.2 SURFACE PREPARATION

Flooring shall be in a smooth, true, level plane, except where indicated as sloped. Before any work under this section is begun, all defects such as rough or scaling concrete, low spots, high spots, and uneven surfaces shall have been corrected, and all damaged portions of concrete slabs shall have been repaired as recommended by the flooring manufacturer. Concrete curing compounds, other than the type that does not adversely affect adhesion, shall be entirely removed from the slabs. Paint, varnish, oils, release agents, sealers, waxers, and adhesives shall be removed, as recommended by the flooring manufacturer.

3.3 MOISTURE TEST

The suitability of the concrete subfloor for receiving the resilient flooring with regard to moisture content shall be determined by a moisture test where recommended by the flooring manufacturer.

3.4 INSTALLATION OF VINYL-COMPOSITION TILE

Tile flooring shall be installed with adhesive in accordance with the manufacturer's installation instructions. Tile lines and joints shall be kept square, symmetrical, tight, and even. Edge width shall vary as necessary to maintain full-size tiles in the field, but no edge tile shall be less than one-half the field tile size, except where irregular shaped rooms make it impossible. Flooring shall be cut to, and fitted around, all permanent fixtures, built-in furniture and cabinets, pipes, and outlets. Edge tile shall be cut, fitted, and scribed to walls and partitions after field flooring has been applied.

3.5 INSTALLATION OF RUBBER FLOORING

Rubber flooring shall be installed with adhesive in accordance with the manufacturer's written installation instructions. Lines and joints shall be kept square, symmetrical, tight, and even. Edge width shall vary as necessary to maintain full-size tiles in the field, but no edge pieces shall be less than one-half the field size, except where irregular shaped rooms make it impossible. Flooring shall be cut to, and fitted around, all permanent fixtures, pipes, and outlets. Edges shall be cut, fitted, and scribed to walls and partitions after field flooring has been applied.

3.6 Not Used

3.7 INSTALLATION OF RESILIENT BASE

Wall base shall be installed with adhesive in accordance with the manufacturer's written instructions. Base joints shall be tight and base shall be even with adjacent resilient flooring. Voids along the top edge of base at masonry walls shall be filled with caulk.

3.8 INSTALLATION OF TREADS AND RISERS

Stair treads and risers shall be installed with adhesive in accordance with the manufacturer's written installation instructions. Treads and risers shall cover the full width of the stairs..

3.9 CLEANING

Immediately upon completion of installation of tile in a room or an area, flooring and adjacent surfaces shall be cleaned to remove all surplus adhesive. After installation, flooring shall be washed with a cleaning solution, rinsed thoroughly with clear cold water, and, except for raised pattern rubber flooring, rubber tile and sheet rubber flooring, rubber stair treads, and static control vinyl tile, given two coats of polish in accordance with manufacturers written instructions. After each polish coat, floors shall be buffed to an even luster with an electric polishing machine. Raised pattern rubber tileflooring, and rubber stair treads, shall be cleaned and maintained as recommended by the manufacturer.

3.10 PROTECTION

From the time of laying until acceptance, flooring shall be protected from damage as recommended by the flooring manufacturer. Flooring which becomes damaged, loose, broken, or curled shall be removed and replaced.

-- End of Section --

SECTION TABLE OF CONTENTS

DIVISION 09 - FINISHES

SECTION 09680

CARPET

09/96

PART 1 GENERAL

1.1 REFERENCES
1.2 SUBMITTALS
1.3 REGULATORY REQUIREMENTS
1.4 DELIVERY AND STORAGE
1.5 ENVIRONMENTAL REQUIREMENTS
1.6 WARRANTY
1.7 EXTRA MATERIAL

PART 2 PRODUCTS

2.1 CARPET
2.1.1 General Description
2.1.2 Physical Characteristics Carpet Type CPT-2 (Corridors)
2.1.3 Carpet Type CPT-3 (Guest Rooms)
2.2 ADHESIVES AND CONCRETE PRIMER
2.3 MOLDING
2.4 TAPE
2.5 COLOR, TEXTURE, AND PATTERN

PART 3 EXECUTION

3.1 SURFACE PREPARATION
3.2 MOISTURE AND ALKALINITY TEST
3.3 PREPARATION OF CONCRETE SUBFLOOR
3.4 INSTALLATION
3.4.1 Broadloom Installation
3.5 CLEANING AND PROTECTION
3.5.1 Cleaning
3.5.2 Protection
3.6 REMNANTS

-- End of Section Table of Contents --

SECTION 09680

CARPET
09/96

PART 1 GENERAL

1.1 REFERENCES

The publications listed below form a part of this specification to the extent referenced. The publications are referred to in the text by basic designation only.

AMERICAN ASSOCIATION OF TEXTILE CHEMISTS AND COLORISTS (AATCC)

AATCC TM 134	(1991) Test Method: Electrostatic Propensity of Carpets

AMERICAN SOCIETY FOR TESTING AND MATERIALS (ASTM)

ASTM D 418	(1993; R 1997) Pile Yarn Floor Covering Construction
ASTM D 1423	(1992) Twist in Yarns by the Direct-Counting Method
ASTM D 3278	(1996) Test Methods for Flash Point of Liquids by Small Scale Closed-Cup Apparatus
ASTM E 648	(1997) Critical Radiant Flux of Floor-Covering Systems Using a Radiant Heat Energy Source

CARPET AND RUG INSTITUTE (CRI)

CRI 104	(1996) Commercial Carpet Installation Standard

CODE OF FEDERAL REGULATIONS (CFR)

16 CFR 1630	Standard for the Surface Flammability of Carpet and Rugs (FF 1-70)

1.2 SUBMITTALS

Government approval is required for submittals with a "G" designation; submittals not having a "G" designation are for information only. When used, a designation following the "G" designation identifies the office that will review the submittal for the Government. The following shall be submitted in accordance with Section 01330 SUBMITTAL PROCEDURES:

SD-02 Shop Drawings

Installation; G-AE

Three copies of drawings indicating typical room to receive

carpet, carpet types, textures and patterns, direction of pile, location of seams, and locations of edge molding.

SD-03 Product Data

Carpet and Accessories;

Manufacturer's catalog data and printed documentation stating physical characteristics, durability, resistance to fading, and flame resistance characteristics for each type of carpet material and installation accessory.

SD-04 Samples

Carpet and Accessories; G-AE

a. Carpet: Seven "Production Quality" samples (8 x 18 inches) of each carpet proposed for use, showing quality, pattern, and color specified.

SD-06 Instructions

Carpet and Accessories;

Three copies of the manufacturer's printed installation instructions for the carpet, including preparation of substrate, seaming techniques, and recommended adhesives and tapes.

SD-10 Operation and Maintenance Data

Carpet and Accessories;

Three copies of carpet manufacturer's maintenance instructions describing recommended type of cleaning equipment and material, spotting and cleaning methods, and cleaning cycles.

1.3 REGULATORY REQUIREMENTS

Carpet and adhesives shall bear the Carpet and Rug Institute (CRI) Indoor Air Quality (IAQ) label. Carpet type bearing the label will indicate that the carpet has been tested and meets the criteria of the CRI IAQ Carpet Testing Program, and minimizes the impact on indoor air quality.

1.4 DELIVERY AND STORAGE

Materials shall be delivered to the site in the manufacturer's original wrappings and packages clearly labeled with the manufacturer's name, brand name, size, dye lot number, and related information. Materials shall be stored in a clean, dry, well ventilated area, protected from damage and soiling, and shall be maintained at a temperature above (60 degrees F) for 2 days prior to installation.

1.5 ENVIRONMENTAL REQUIREMENTS

Areas in which carpeting is to be installed shall be maintained at a temperature above (60 degrees F) for 2 days before installation, during installation, and for 2 days after installation. A minimum temperature of (55 degrees F) shall be maintained thereafter for the duration of the contract. Traffic or movement of furniture or equipment in carpeted area

shall not be permitted for 24 hours after installation. Other work which would damage the carpet shall be completed prior to installation of carpet.

1.6 WARRANTY

Manufacturer's standard performance guarantees or warranties that extend beyond a one-year period shall be provided.

1.7 EXTRA MATERIAL

Extra material from same dye lot consisting of full width continuous broadloom and uncut carpet tiles shall be provided for future maintenance. A minimum of 2 percent of total square meters (square yards) of each carpet type, pattern, and color shall be provided.

PART 2 PRODUCTS

2.1 CARPET

Notwithstanding Section 00700 CONTRACT CLAUSES FAR 52.236-5, Material and Workmanship, the Carpet shall be manufactured as described in SECTION 09915 COLOR SCHEDULE in order to be fully compatible with and interface with the existing Phase 3 Lodging facility. No other products will be acceptable. The competition Advocate authorizes sole source procurement.

2.1.1 General Description

Carpet shall be first quality; free of visual blemishes, streaks, poorly dyed areas, fuzzing of pile yarn, spots or stains, and other physical and manufacturing defects. Carpet materials and treatments shall be reasonably nonallergenic and free of other recognized health hazards. All grade carpets shall have a static control construction which gives adequate durability and performance.

2.1.2 Physical Characteristics Carpet Type CPT-2 (Corridors)

Carpet shall comply with the following:

a. Carpet Construction: Tufted.

b. Type: Broadloom (12 feet) minimum usable carpet width.

c. Pile Type: Textured Loop.

d. Pile Fiber: Commercial branded nylon continuous filament.

e. Pile: Minimum 3.3 (.130 inch) in accordance with ASTM D 418.

f. Yarn Ply: Minimum 2 in accordance with ASTM D 1423.

g. Gauge or Pitch: Minimum 3.15 (1/8 inch) in accordance with ASTM D 418.

h. Stitches: Minimum 2.76 per 10 cm (7 per inch).

i. Finished Pile Yarn Weight: Minimum 28 ounces per square yard. This does not include weight of backings. Weight shall be determined in accordance with ASTM D 418.

j. Pile Density: Minimum 6914.

k. Dye Method: Yarn dyed.

l. Backing Materials: Primary backing materials shall be woven polypropylene. Secondary backing to suit project requirements shall be those customarily used and accepted by the trade for each type of carpet, except when a special unitary back designed for gluedown is provided.

m. Static Control: Static control shall be provided to permanently control static buildup to less than 3.5 kV when tested at 20 percent relative humidity and 21 degrees C (70 degrees F) in accordance with AATCC TM 134.

n. Flammability and Critical Radiant Flux Requirements: Carpet shall comply with 16 CFR 1630. Carpet in corridors and exits shall meet NFPA Class I when tested in accordance with ASTM E 648.

2.1.3 Carpet Type CPT-3 (Guest Rooms)

Carpet shall comply with the following:

a. Carpet Construction: Precision Cut and Uncut tip sheared.

b. Type: Broadloom 3.6 m (12 feet) minimum usable carpet width.

c. Pile Type: Loop and pile.

d. Pile Fiber: Eco Sol Q Prem Brand SD Nylon.

e. Pile or Wire Height: Minimum 4.0 mm (.156 inches) in accordance with ASTM D 418.

f. Yarn Ply: Minimum 2 in accordance with ASTM D 1423.

g. Gauge: Minimum 3.175 mm (1/8 inch) in accordance with ASTM D 418.

h. Stitches: Minimum .32 per square meter. (12.5 per square inch).

i. Finished Pile Yarn Weight: Minimum 32 ounces per square yard. Weight shall be determined in accordance with ASTM D 418.

j. Pile Density: Minimum 7600.

k. Dye Method:
Solution dyed.

l. Backing Materials: Primary backing materials shall be woven polypropylene. Secondary backing shall be "Actionbac".

m. Static Control: Static control shall be provided to permanently control static buildup to less than 3.0 kV when tested at 20 percent relative humidity and (70 degrees F) in accordance with AATCC TM 134.

n. Flammability and Critical Radiant Flux Requirements: Carpet shall comply with 16 CFR 1630. Carpet in corridors and exits shall meet NFPA Class I when tested in accordance with ASTM E 648.

2.2 ADHESIVES AND CONCRETE PRIMER

Adhesives and concrete primers for installation of carpet shall be waterproof, nonflammable, meet local air-quality standards, and shall be as recommended by the carpet manufacturer. Seam adhesive shall be waterproof, nonflammable, and nonstaining as recommended by the carpet manufacturer. Adhesives flashpoint shall be minimum 60 degrees C 140 degrees F in accordance with ASTM D 3278.

2.3 MOLDING

Vinyl molding shall be heavy-duty and designed for the type of carpet being installed. Floor flange shall be a minimum 50 mm (2 inches) wide. Color to match carpeting.

2.4 TAPE

Tape for seams shall be as recommended by the carpet manufacturer for the type of seam used in installation.

2.5 COLOR, TEXTURE, AND PATTERN

Color, texture, and pattern shall be in accordance with Section 09915 COLOR SCHEDULE.

PART 3 EXECUTION

3.1 SURFACE PREPARATION

Carpet shall not be installed on surfaces that are unsuitable and will prevent a proper installation. Holes, cracks, depressions, or rough areas shall be repaired using material recommended by the carpet or adhesive manufacturer. Floor shall be free of any foreign materials and swept broom clean. Before beginning work, subfloor shall be tested with glue and carpet to determine "open time" and bond.

3.2 MOISTURE AND ALKALINITY TEST

Concrete slab shall be tested for moisture content and excessive alkalinity in accordance with CRI 104. The moisture content shall not exceed a hygrometer reading of 65 percent.

3.3 PREPARATION OF CONCRETE SUBFLOOR

Installation of the carpeting shall not commence until concrete substrate is at least 90 days old. The concrete surfaces shall be prepared in accordance with instructions of the carpet manufacturer. Type of concrete sealer, when required, shall be compatible with the carpet.

3.4 INSTALLATION

Installation shall be in accordance with the manufacturer's instructions and CRI 104. Edges of carpet meeting hard surface flooring shall be protected with molding. Installation of the typical carpet is to be reviewed and approved by Contracting Officer before proceeding further with installation.

3.4.1 Broadloom Installation

Broadloom carpet shall be installed direct glue down and shall be smooth, uniform, and secure, with a minimum of seams. Seams shall be uniform, unnoticeable, and treated with a seam adhesive. Side seams shall be run toward the light where practical and where such layout does not increase the number of seams. Breadths shall be installed parallel, with carpet pile in the same direction. Patterns shall be accurately matched. Cutouts, as at door jambs, columns and ducts shall be neatly cut and fitted securely. Seams at doorways shall be located parallel to and centered directly under doors. Seams shall not be made perpendicular to doors or at pivot points. Seams at changes in directions of corridors shall follow the wall line parallel to the carpet direction. Corridors with widths less than 1.8 m (6 feet) shall have the carpet laid lengthwise down the corridors.

3.5 CLEANING AND PROTECTION

3.5.1 Cleaning

After installation of the carpet, debris, scraps, and other foreign matter shall be removed. Soiled spots and adhesive shall be removed from the face of the carpet with appropriate spot remover. Protruding face yarn shall be cut off and removed. Carpet shall be vacuumed clean.

3.5.2 Protection

The installed carpet shall be protected from soiling and damage with heavy, reinforced, nonstaining kraft paper, plywood, or hardboard sheets. Edges of kraft paper protection shall be lapped and secured to provide a continuous cover. Traffic shall be restricted for at least 45 hours. Protective covering shall be removed when directed by the Contracting Officer.

3.6 REMNANTS

Remnants remaining from the installation, consisting of scrap pieces more than 600 mm (2 feet) in dimension with more than 0.6 square meters)6 square feet) total, shall be provided. Non-retained scraps shall be removed from site.

-- End of Section --

This page was intentionally left blank for duplex printing.

SECTION TABLE OF CONTENTS

DIVISION 09 - FINISHES

SECTION 09900

PAINTING, GENERAL

07/92

PART 1 GENERAL

1.1 REFERENCES
1.2 SUBMITTALS
1.3 PACKAGING, LABELING, AND STORING
1.4 APPROVAL OF MATERIALS
1.5 ENVIRONMENTAL CONDITIONS
1.6 SAFETY AND HEALTH
1.6.1 Worker Exposures
1.6.2 Toxic Compounds
1.6.3 Training
1.6.4 Coordination

PART 2 PRODUCTS

2.1 PAINT
2.1.1 Colors and Tints
2.1.2 Mildewcide and Insecticide
2.1.3 Lead
2.1.4 Chromium
2.1.5 Volatile Organic Compound (VOC) Content

PART 3 EXECUTION

3.1 PROTECTION OF AREAS NOT TO BE PAINTED
3.2 SURFACE PREPARATION
3.2.1 Concrete, Stucco and Masonry Surfaces
3.2.2 Ferrous Surfaces
3.2.3 Nonferrous Metallic Surfaces
3.2.4 Gypsum Board Surfaces
3.2.5 Mastic-Type Surfaces
3.2.6 Plaster Surfaces
3.2.7 Wood Surfaces
3.2.7.1 Interior Wood Stain
3.3 MIXING AND THINNING
3.3.1 Cement-Emulsion Filler Coat
3.3.2 Two-Component Systems
3.4 APPLICATION
3.4.1 Ventilation
3.4.2 Respirators
3.4.3 First Coat
3.4.4 Timing
3.4.5 Stains
3.4.6 Fillers
3.4.6.1 Cement-Emulsion Filler
3.4.6.2 Latex Filler

3.4.7 Textured Coating
3.4.8 Ferrous-Metal Primer
3.5 PIPE COLOR CODE MARKING
3.6 Not Used
3.7 NotUsed
3.8 SURFACES NOT TO BE PAINTED
3.9 CLEANING
3.10 PAINTING SCHEDULES

-- End of Section Table of Contents --

SECTION 09900

PAINTING, GENERAL
07/92

PART 1 GENERAL

1.1 REFERENCES

The publications listed below form a part of this specification to the extent referenced. The publications are referred to in the text by basic designation only.

AMERICAN CONFERENCE OF GOVERNMENTAL INDUSTRIAL HYGIENISTS (ACGIH)

ACGIH-02	(1996) Threshold Limit Values for Chemical Substances and Physical Agents and Biological Exposure Indices

AMERICAN SOCIETY FOR TESTING AND MATERIALS (ASTM)

ASTM D 3273	(1994) Resistance to Growth of Mold on the Surface of Interior Coating in an Environmental Chamber
ASTM D 3274	(1995) Evaluating Degree of Surface Disfigurement of Paint Films by Microbial (Fungal or Algal) Growth or Soil and Dirt Accumulation
ASTM D 4258	(1988; R 1992) Surface Cleaning Concrete for Coating

COMMERCIAL ITEM DESCRIPTIONS (CID)

CID A-A-1500	(Rev A) Sealer, Surface (Latex Block Filler)
CID A-A-1788	(Basic) Varnish, Oil: Interior
CID A-A-2246	(Rev A) Paint, Latex (Gloss, Interior)
CID A-A-2247	(Basic) Paint, Latex (Semigloss, Interior)
CID A-A-2542	(Basic) Sealer, Terrazzo and Concrete Floors, Waterbased
CID A-A-2962	(Basic) Enamel, Alkyd
CID A-A-2994	(Basic) Primer Coating, Interior, for Walls and Wood

FEDERAL SPECIFICATIONS (FS)

FS TT-C-555	(Rev B; Am 1) Coating, Textured (for Interior and Exterior Masonry Surfaces)

FS TT-E-2784	(Rev A) Enamel (Acrylic-Emulsion, Exterior Gloss and Semigloss) (Metric)

STEEL STRUCTURES PAINTING COUNCIL (SSPC)

SSPC Paint 5	(1995) Zinc Dust, Zinc Oxide and Phenolic Varnish Paint
SSPC Paint 23	(1982) Latex Primer for Steel surfaces
SSPC Paint 25	(1991) Red Iron Oxide, Zinc Oxide, Raw Linseed Oil and Alkyd Primer (Without Lead and Chromate Pigments)
SSPC SP 1	(1982) Solvent Cleaning
SSPC SP 2	(1995) Hand Tool Cleaning
SSPC SP 3	(1995) Power Tool Cleaning
SSPC SP 7	(1994) Brush-Off Blast Cleaning

1.2 SUBMITTALS

Government approval is required for submittals with a "G" designation; submittals not having a "G" designation are for information only. When used, a designation following the "G" designation identifies the office that will review the submittal for the Government. The following shall be submitted in accordance with Section 01330 SUBMITTAL PROCEDURES:

SD-03 Product Data

Paint;

The names, quantity represented, and intended use for the proprietary brands of materials proposed to be substituted for the specified materials regardless of quantities in states where VOC content limitations apply.

SD-04 Color Samples

Paint; G-AE

Two painted samples, minimum 200 x 200 mm (8 x 8 inch) illustrated selected colors and sheen for each color and system selected. Submit on stiff paper backed material. For stains, varnishes and similar transparent coatings, apply finishes on identical type of materials to which they will be applied on job.

SD-08 Manufacturer's Instructions

Application;

Manufacturer's current printed product description, material safety data sheets (MSDS) and technical data sheets for each coating system. Detailed mixing, thinning and application instructions, minimum and maximum application temperature, and curing and drying times between coats for epoxy, moisture-curing polyurethane, and liquid glaze coatings. Detailed application

instructions for textured coatings shall be provided.

1.3 PACKAGING, LABELING, AND STORING

Paints shall be in sealed containers that legibly show the designated name, formula or specification number, batch number, color, quantity, date of manufacture, manufacturer's formulation number, manufacturer's directions including any warnings and special precautions, and name of manufacturer. Pigmented paints shall be furnished in containers not larger than (5 gallons). Paints and thinner shall be stored in accordance with the manufacturer's written directions and as a minimum stored off the ground, under cover, with sufficient ventilation to prevent the buildup of flammable vapors and at temperatures between (40 and 95 degrees F). Paints shall be stored on the project site or segregated at the source of supply sufficiently in advance of need to allow 30 days for testing.

1.4 APPROVAL OF MATERIALS

When samples are tested, approval of materials will be based on tests of the samples; otherwise, materials will be approved based on test reports furnished with them. If materials are approved based on test reports furnished, samples will be retained by the Government for testing should the materials appear defective during or after application. In addition to any other remedies under the contract the cost of retesting defective materials will be at the Contractor's expense.

1.5 ENVIRONMENTAL CONDITIONS

Unless otherwise recommended by the paint manufacturer, the ambient temperature shall be between (45 and 95 degrees F) when applying coatings other than water-thinned, epoxy, and moisture-curing polyurethane coatings. Water-thinned coatings shall be applied only when ambient temperature is between (50 and 90 degrees F). Epoxy, and moisture-curing polyurethane coatings shall be applied only within the minimum and maximum temperatures recommended by the coating manufacturer. Moisture-curing polyurethane shall not be applied when the relative humidity is below 30 percent.

1.6 SAFETY AND HEALTH

Work shall comply with applicable Federal, State, and local laws and regulations, and with the ACCIDENT PREVENTION PLAN, including the Activity Hazard Analysis as specified in the CONTRACT CLAUSES. The Activity Hazard Analysis shall include analyses of the potential impact of painting operations on painting personnel and on others involved in and adjacent to the work zone.

1.6.1 Worker Exposures

Exposure of workers to hazardous chemical substances shall not exceed limits established by ACGIH-02, or as required by a more stringent applicable regulation.

1.6.2 Toxic Compounds

Toxic products having ineffective physiological warning properties, such as no or low odor or irritation levels, shall not be used unless approved by the Contracting Officer.

1.6.3 Training

Workers having access to an affected work area shall be informed of the contents of the applicable material data safety sheets (MDSS) and shall be informed of potential health and safety hazard and protective controls associated with materials used on the project. An affected work area is one which may receive mists and odors from the painting operations. Workers involved in preparation, painting and clean-up shall be trained in the safe handling and application, and the exposure limit, for each material which the worker will use in the project. Personnel having a need to use respirators and masks shall be instructed in the use and maintenance of such equipment.

1.6.4 Coordination

Work shall be coordinated to minimize exposure of building occupants, other Contractor personnel, and visitors to mists and odors from preparation, painting and clean-up operations.

PART 2 PRODUCTS

2.1 PAINT

The term "paint" as used herein includes emulsions, enamels, paints, stains, varnishes, sealers, cement-emulsion filler, and other coatings, whether used as prime, intermediate, or finish coat. Paint shall conform to the requirements listed in the painting schedules at the end of this section, except when the required amount of a material of a particular batch is (50 gallons) or less, an approved first-line proprietary paint material with similar intended formulation, usage and color to that specified may be used. Additional requirements are as follows:

2.1.1 Colors and Tints

Colors shall be as selected from manufacturer's standard colors, as indicated. Manufacturer's standard color is for identification of color only. Tinting of epoxy and urethane paints shall be done by the manufacturer. Stains shall conform in shade to manufacturer's standard color. The color of the undercoats shall vary slightly from the color of the next coat.

2.1.2 Mildewcide and Insecticide

Paint specified for all coats applied to fabrics and vapor barrier jackets over insulation and surfaces in mechanical area shall contain a mildewcide that will not adversely affect the color, texture, or durability of the coating. The mildewcide shall be incorporated into the paint by the manufacturer and shall attain a surface disfigurement rating of 8 or greater when tested in accordance with ASTM D 3273 and evaluated in accordance with ASTM D 3274. Mercurial mildewcide shall not be used in interior paint. Insecticides shall not be used in paint.

2.1.3 Lead

Paints containing lead in excess of 0.06 percent by weight of the total nonvolatile content (calculated as lead metal) shall not be used.

2.1.4 Chromium

Paints containing zinc chromate or strontium chromate pigments shall not be

used.

2.1.5 Volatile Organic Compound (VOC) Content

Paints shall comply with applicable federal, state and local laws enacted to insure compliance with Federal Clean Air Standards and shall conform to the restrictions of the local air pollution control authority.

PART 3 EXECUTION

3.1 PROTECTION OF AREAS NOT TO BE PAINTED

Items not to be painted which are in contact with or adjacent to painted surfaces shall be removed or protected prior to surface preparation and painting operations. Items removed prior to painting shall be replaced when painting is completed. Following completion of painting, workmen skilled in the trades involved shall reinstall removed items. Surfaces contaminated by coating materials shall be restored to original condition.

3.2 SURFACE PREPARATION

Surfaces to be painted shall be clean and free of foreign matter before application of paint or surface treatments. Oil and grease shall be removed prior to mechanical cleaning. Cleaning shall be programmed so that dust and other contaminants will not fall on wet, newly painted surfaces. Exposed ferrous metals such as nail heads on or in contact with surfaces to be painted with water-thinned paints, shall be spot-primmed with a suitable corrosion-inhibitive primer capable of preventing flash rusting and compatible with the coating specified for the adjacent areas.

3.2.1 Concrete, Stucco and Masonry Surfaces

Concrete, stucco and masonry surfaces shall be allowed to dry at least 30 days before painting, except concrete slab on grade which shall be allowed to cure 90 days before painting. Surfaces shall be cleaned in accordance with ASTM D 4258. Glaze, efflorescence, laitance, dirt, grease, oil, asphalt, surface deposits of free iron and other foreign matter shall be removed prior to painting. Surfaces to receive polyurethane or epoxy coatings shall be acid-etched or mechanically abraded as specified by the coating manufacturer, rinsed with water, allowed to dry, and treated with the manufacturer's recommended conditioner prior to application of the first coat.

3.2.2 Ferrous Surfaces

Ferrous surfaces including those that have been shop-coated, shall be solvent-cleaned or detergent-washed in accordance with SSPC SP 1. Surfaces that contain loose rust, loose mill scale, and other foreign substances shall be cleaned mechanically with hand tools according to SSPC SP 2, power tools according to SSPC SP 3 or by sandblasting according to SSPC SP 7. Shop-coated ferrous surfaces shall be protected from corrosion by treating and touching up corroded areas immediately upon detection.

3.2.3 Nonferrous Metallic Surfaces

Galvanized, aluminum and aluminum-alloy, lead, copper, and other nonferrous metal surfaces shall be solvent-cleaned or detergent-washed in accordance with SSPC SP 1.

3.2.4 Gypsum Board Surfaces

Gypsum board surfaces shall be dry and shall have all loose dirt and dust removed by brushing with a soft brush, rubbing with a cloth, or vacuum-cleaning prior to application of the first-coat material. A damp cloth or sponge may be used if paint will be water-based.

3.2.5 Mastic-Type Surfaces

Mastic-type surfaces shall be prepared by removing foreign material.

3.2.6 Plaster Surfaces

Plaster shall age at least 30 days before painting. Plaster shall be clean and free from loose matter and shall have an instrument-measured moisture content not exceeding 8 percent.

3.2.7 Wood Surfaces

Wood surfaces shall be cleaned of foreign matter. Moisture content of the wood shall not exceed 12 percent as measured by a moisture meter, unless otherwise authorized. Wood surfaces adjacent to surfaces to receive water-thinned paints shall be primed and/or touched up before applying water-thinned paints. Small, dry seasoned knots shall be scraped, cleaned, and given a thin coat of commercial knot sealer, before application of the priming coat. Pitch on large, open, unseasoned knots and all other beads or streaks of pitch shall be scraped off, or, if it is still soft, removed with mineral spirits or turpentine, and the resinous area shall be thinly coated with knot sealer. Finishing nails shall be set, and all holes and surface imperfections shall be primed. After priming, holes and imperfections in finish surfaces shall be filled with putty or plastic wood filler, colored to match the finish coat if natural finish is required, allowed to dry, and sanded smooth. Putty or wood filler shall be compatible with subsequent coatings.

3.2.7.1 Interior Wood Stain

Interior wood surfaces to receive stain shall be sanded. Oak and other open-grain wood to receive stain shall be given a coat of wood filler not less than 8 hours before the application of stain; excess filler shall be removed and the surface sanded smooth.

3.3 MIXING AND THINNING

When thinning is approved as necessary to suit surface, temperature, weather conditions, or application methods, paints may be thinned in accordance with the manufacturer's directions. When thinning is allowed, paints shall be thinned immediately prior to application with not more than (1 pint) of suitable thinner per (gallon). The use of thinner shall not relieve the Contractor from obtaining complete hiding, full film thickness, or required gloss. Thinning shall not cause the paint to exceed limits on volatile organic compounds. Paints of different manufacturers shall not be mixed.

3.3.1 Cement-Emulsion Filler Coat

Cement and aggregate shall be dry-mixed so that uniform distribution and intermixing are obtained. Mixing liquid and one-half of the total amount of water shall be premixed and added gradually to the white portland cement

and aggregate with constant stirring until a thick, smooth material is obtained. Emulsion paint shall then be added to the mixture and stirred until uniformity is obtained. The blend shall have a thick, creamy consistency. The remainder of the water shall be added if necessary to obtain a material with adequate application properties. Blending resin emulsion or emulsion paint with any other component shall be done with caution; too rapid an agitation will cause air entrapment and foaming.

3.3.2 Two-Component Systems

Two-component systems shall be mixed in accordance with manufacturer's instructions. Any thinning of the first coat to ensure proper penetration and sealing shall be as recommended by the manufacturer for each type of substrate.

3.4 APPLICATION

Painting practices shall comply with applicable federal, state and local laws enacted to insure compliance with Federal Clean Air Standards. Unless otherwise specified or recommended by the paint manufacturer, paint may be applied by brush, roller, or spray. At the time of application, paint shall show no signs of deterioration. Uniform suspension of pigments shall be maintained during application. Each coat of paint shall be applied so dry film shall be of uniform thickness and free from runs, drops, ridges, waves, pinholes or other voids, laps, brush marks, and variations in color, texture, and finish. Hiding shall be complete. Rollers for applying paints and enamels shall be of a type designed for the coating to be applied and the surface to be coated. Special attention shall be given to insure that all edges, corners, crevices, welds, and rivets receive a film thickness equal to that of adjacent painted surfaces. Paints, except water-thinned types, shall be applied only to surfaces that are completely free of moisture as determined by sight or touch.

3.4.1 Ventilation

Affected areas shall be ventilated during paint application so that workers exposure to chemical substances shall not exceed limits as established by ACGIH-02, or as required by a more stringent applicable regulation. Interior work zones having a volume of (10,000 cubic feet) or less shall be ventilated at a minimum of 2 air exchanges per hour. Ventilation in larger work zones shall be maintained by means of mechanical exhaust. Solvent vapors shall be exhausted outdoors, away from air intakes and workers. Return air inlets in the work zone shall be temporarily sealed before start of work until the coatings have dried.

3.4.2 Respirators

Operators and personnel in the vicinity of operating paint sprayers shall wear respirators.

3.4.3 First Coat

The first coat on plaster, gypsum wallboard, and other surfaces shall include repeated touching up of suction spots or overall application of primer or sealer to produce uniform color and gloss. Excess sealer shall be wiped off after each application. The first coat on both faces of wood doors shall be applied at essentially the same time. Glazed doors and sashes shall be given the specified coating system within 3 weeks of the time they are glazed, but not before the glazing material has set; paint

shall overlay glass about (70 mils) all around. Each varnish coat shall be sanded lightly prior to application of subsequent coats.

3.4.4 Timing

Surfaces that have been cleaned, pretreated, and otherwise prepared for painting shall be given a coat of the specified first coat as soon as practical after such pretreatment has been completed, but prior to any deterioration of the prepared surface. Sufficient time shall elapse between successive coats to permit proper drying. This period shall be modified as necessary to suit weather conditions. Oil-based or oleoresinous solvent-type paints shall be considered dry for recoating when the paint feels firm, does not deform or feel sticky under moderate pressure of the thumb, and the application of another coat of paint does not cause the undercoat to lift or lose adhesion. Manufacturer's instructions for application, curing and drying time between coats of two-component systems shall be followed.

3.4.5 Stains

Stain shall be applied at the rate specified in the manufacturer's printed directions. Oil-type stain shall be applied by brushing with the grain for the full length of the board or course of siding.

3.4.6 Fillers

Concrete and masonry surface voids shall be filled; however, surface irregularities need not be completely filled. The dried filler shall be uniform and free of pinholes. Filler shall not be applied over caulking compound.

3.4.6.1 Cement-Emulsion Filler

Immediately before filler application, surfaces shall be dampened uniformly and thoroughly, with no free surface water visible, by several applications of potable water with a fog spray, allowing time between the sprayings for water to be absorbed. Cement-emulsion filler shall be scrubbed into the surface vigorously with a stiff-bristled brush having tampico or palmyra bristles not longer than (2-1/2 inches). At least 24 hours shall elapse before applying exterior emulsion paint over cement-emulsion filler. When the ambient temperature is over (85 degrees F), cement-emulsion filler surfaces shall be dampened lightly with a fog spray of potable water immediately prior to application of the subsequent paint coat.

3.4.6.2 Latex Filler

Latex filler, CID A-A-1500, shall be applied according to the manufacturer's instructions. Surface voids shall be filled and excess filler shall be removed from the surface with a rubber squeegee. The filler shall be allowed to dry the length of time specified by the manufacturer prior to applying successive coats of paint.

3.4.7 Textured Coating

Application of textured coating, FS TT-C-555, shall be as specified in the manufacturer's printed directions.

3.4.8 Ferrous-Metal Primer

Primer for ferrous-metal shall be applied to ferrous surfaces to receive paint other than asphalt varnish prior to deterioration of the prepared surface. The semitransparent film applied to some pipes and tubing at the mill is not to be considered a shop coat, but shall be overcoated with the specified ferrous-metal primer prior to application of finish coats.

3.5 PIPE COLOR CODE MARKING

Pipes in exposed areas and in accessible pipe spaces shall be provided with color band and titles adjacent to all valves, except those provided at plumbing fixtures, at not more than (40 foot) spacing on straight pipe runs, adjacent to change in direction, and on both sides where pipes pass through walls or floors. Color code marking shall be of the color listed in TABLE I and the size listed in TABLE II. The arrows shall be installed adjacent to each band to indicate the direction of flow in the pipe. The legends shall be printed in upper-case black letters as listed in TABLE I. Letter sizes shall be as listed in TABLE II. Marking shall be painted or applied using colored, pressure-sensitive adhesive markers of standard manufacture. Paint shall be as specified for insulated and uninsulated piping.

TABLE I. COLOR CODES FOR MARKING PIPE

Material	Band	Letters and Arrow*	Legend
Cold water (potable)	Green	White	POTABLE WATER
Fire protection water	Red	White	FIRE PR. WATER
Hot water (domestic)	Green	White	H.W.
Hot water recirculating (domestic)	Green	White	H.W.R.
High temp. water supply	Yellow	Black	H.T.W.S.
High temp. water return	Yellow	Black	H.T.W.R.
Boiler feed water	Yellow	Black	B.F.
Low temp. water supply (heating)	Yellow	Black	L.T.W.S.
Low temp. water return (heating)	Yellow	Black	L.T.W.R.
Condenser water supply	Green	White	COND. W.S.
Condenser water return	Green	White	COND. W.R.
Chilled water supply	Green	White	C.H.W.S.
Chilled water return	Green	White	C.H.W.R.
Treated water	Yellow	Black	TR. WATER
Chemical feed	Yellow	Black	CH. FEED
Compressed air	Yellow	Black	COMP. AIR
Natural gas	Blue	White	NAT. GAS
Freon	Blue	White	FREON
Fuel oil	Yellow	Black	FUEL OIL
Steam	Yellow	Black	STM.
Condensate	Yellow	Black	COND.

(

TABLE II. COLOR CODE MARKING SIZES

Outside Diameter of Pipe Covering (Inches)	Length of Color Band (inches)	Arrow Length x Width (Inches)	Size of Legend Letters and Numerals (Inches)
Less than 1-1/2	8	8 x 2-1/4	1/2
1-1/2 to 2-3/8	8	8 x 2-1/4	3/4

TABLE II. COLOR CODE MARKING SIZES

Outside Diameter of Pipe Covering (Inches)	Length of Color Band (inches)	Arrow Length x Width (Inches)	Size of Legend Letters and Numerals (Inches)
2-1/2 to 7-7/8	12	8 x 2-1/4	1-1/4
8 to 10	24	12 x 4-1/2	2-1/2
Over 10	32	12 x 4-1/2	3-1/2)

3.6 Not Used

3.7 NotUsed

3.8 SURFACES NOT TO BE PAINTED

Surfaces in the following areas shall not to be painted: elevator shafts, unexposed interior ferrous surfaces, and jacketing over insulation pipes in unexposed locations that do not require color coding.. In addition, surfaces of hardware, fittings, and other factory finished items shall not be painted.

3.9 CLEANING

Cloths, cotton waste and other debris that might constitute a fire hazard shall be placed in closed metal containers and removed at the end of each day. Upon completion of the work, staging, scaffolding, and containers shall be removed from the site or destroyed in an approved manner. Paint and other deposits on adjacent surfaces shall be removed and the entire job left clean and acceptable.

3.10 PAINTING SCHEDULES

The following painting schedules identify the surfaces to be painted and prescribe the paint to be used and the number of coats of paint to be applied. Contractor options are indicated by ------or------ between optional systems or coats.

EXTERIOR PAINTING SCHEDULE

Ferrous metal unless otherwise specified	SSPC Paint 5	CID A-A-2962 Type I Class B Grade C	CID A-A-2962 Type 1 Class B Grade C
	SSPC Paint 25	CID A-A-2962 Type I Class B Grade C	CID A-A-2962 Type 1 Class B Grade C
	SSPC Paint 23	FS TT-E-2784 Type [I] [II]	FS TT-E-2784 Type [I] [II]

INTERIOR PAINTING SCHEDULE

Gypsum board, concrete, and concrete masonry units, unless otherwise specified.	CID A-A-2994	CID A-A-2246 Type II, Class 3	None
Concrete: Sealer for floors requiring dust reduction	CID A-A-2542 Type I	None	None
Plaster and gypsum board: in Guest bathrooms, and public restrooms.	CID A-A-2994	FS TT-E-2784 Type II, Class 2	None
Concrete masonry units, plaster, and gypsum board: for walls in stairwells.	CID A-A-1500	CID A-A-2994 Type II, Class 3	CID A-A-2247
Ferrous Metal unless otherwise specified	SSPC Paint 25 (Factory applied)	CID A-A-2962 Type II Class B Grade C	CID A-A-2962 Type II Class B Grade C
Ferrous metal factory-primed mechanical and electrical equipment.	Two coats of paint as recommended by the equipment manufacturer		None
Wood: stain and varnish finishes as follows: wood top rail	Commercially available stain	CID A-A-1788 Type Satin Class I In addition a fourth coat of CID A-A-1788 Type Satin Class I	CID A-A-1788 Type Satin Class I
Ferrous Metal: Convector enclosures, electrical conduit runs: metallic tubing	SSPC Paint 23	None	None

INTERIOR PAINTING SCHEDULE

uninsulated ducts and pipes, pipe hangers, louvers, grilles, and air outlets, in areas having painted adjacent surfaces.			
Aluminum and Galvanized Surface Metal:			
Convector enclosures,	FS TT-E-2784		
electrical conduit runs		CID A-A-2247	CID A-A-2247
metallic tubing			
uninsulated ducts and pipes, pipe hangers, louvers, grilles, and air outlets, in areas having painted adjacent surfaces.			
Facing of vapor barrier jackets of presized or adhesive finished cloth cover insulation on pipes, ducts, and equipment in mechanical rooms.	Two coats of paint to match adjacent areas		None

-- End of Section --

SECTION TABLE OF CONTENTS

DIVISION 09 - FINISHES

SECTION 09915

COLOR SCHEDULE

06/93

PART 1 GENERAL

1.1 GENERAL
1.2 SUBMITTALS Not Used

PART 2 PRODUCTS

2.1 REFERENCE TO MANUFACTURER'S COLOR
2.2 COLOR SCHEDULE
2.2.1 Exterior Walls
2.2.2 Exterior Trim
2.2.3 Exterior Roof
2.2.4 Interior Floor Finishes
2.2.5 Interior Base Finishes
2.2.6 Interior Wall Finishes
2.2.7 Interior Ceiling Finishes
2.2.8 Interior Trim
2.2.9 Interior Window Treatment
2.2.10 Interior Miscellaneous

PART 3 EXECUTION (Not Applicable)

-- End of Section Table of Contents --

SECTION 09915

COLOR SCHEDULE
06/93

PART 1 GENERAL

1.1 GENERAL

This section covers only the color of the exterior and interior materials and products that are exposed to view in the finished construction. The word "color" as used herein includes surface color and pattern. Requirements for quality and method of installation are covered in other appropriate sections of the specifications. Specific locations where the various materials are required are shown on the drawings. Items not designated for color in this section may be specified in other sections. When color is not designated for items, the Contractor shall propose a color for approval.

1.2 SUBMITTALS Not Used

PART 2 PRODUCTS

2.1 REFERENCE TO MANUFACTURER'S COLOR

Where color is shown as being specific to one manufacturer, an equivalent color by another manufacturer may be submitted for approval. Manufacturers and materials specified are not intended to limit the selection of equal colors from other manufacturers.

2.2 COLOR SCHEDULE

The color schedule lists the colors, patterns and textures required for exterior and interior finishes, including both factory applied and field applied colors.

2.2.1 Exterior Walls

Exterior wall colors shall apply to exterior wall surfaces including recesses at entrances and projecting vestibules. Conduit shall be painted to closely match the adjacent surface color. Wall color shall be provided to match the colors listed below.

a. Brick: Blend of 60% Dark Ironspot Velour and 40% Medium Ironspot Velour by Endicott Brick Company.

b. Mortar: Color No. SPM 401 by SpecMix.

c. Paint: Not Used.

d. Concrete Masonry Units (Integrally Colored): Not Used.

e. Composite Metal Panels, Hardware, and Associated Trim:
CMP-1: Alusuisse Composites, "Platinum" (1-30-d)
CMP-2: PPG Industries, Duranar coating #UC5173XL "Pewter"..

f. Ribbed Metal Siding:
RMS: PPG Industries, Duranar coating #UC52003 "Boysenberry".
Refer to Paragraph 2.2.2j for sealant color.

g. Precast Concrete: Integral "buff" color which matches the precast installed on the existing Phase Three portion of the building.

h. Glass and Glazing: Clear (no tint).

2.2.2 Exterior Trim

Exterior trim shall be provided to match the colors listed below.

a. Hollow Metal Doors and Door Frames: Paint color to match precast concrete panels.

b. Windows (mullion, muntin, sash, trim, and sill): Clear anodized aluminum.

c. Wood Stain: Not used.

d. Fascia: Not used.

e. PTAC Unit Louvers, and Flashings: Clear anodized aluminum.

f. Guardrails: Not Used.

g. Soffits and Ceilings: Not used.

h. Signage: Not used.

i. Access Panels: Not used.

j. Caulking and Sealants:
Sealant No. 1: For use in and around brick masonry: Match dark red sealant used on Phase Three (Field verify Tremco color to use).
Sealant No. 2: For use at architectural precast concrete joints: Tremco "Buff".
Sealant No. 3: For use at aluminum window frames/PTAC unit louvers: Tremco "Aluminum Stone".
Sealant No. 4: For use at ribbed metal siding: Tremco "Boysenberry".
Sealant No. 5: For use at interior door frames painted PT-4: Tremco "Builders Beige".
Sealant No. 6: For use at exposed drywall partitions: Match wall color - field select after walls are painted.

l. Mechanical Louvers: Louver types L-21 to match Industrial Louver's standard color "Rawhide". Narrow profile louvers below windows to have clear anodized aluminum finish.

m. Aluminum Channel: Clear anodized aluminum.

2.2.3 Exterior Roof

Roof color shall apply to exterior roof surfaces including sheet metal flashings and copings, roof trim, and similar items. Roof color shall be provided to match the colors listed below.

a. Metal: Not used.

b. Shingles: Not used.

c. EPDM: Black.

2.2.4 Interior Floor Finishes

Flooring materials shall be provided to match the colors listed below.

a. Carpet:
CPT-1: Not used.
CPT-2: Color 418 (Greek) in "Lineage" carpet by Lees (corridors)to match Phase Three.
CPT-3: Custom Color Sample Number B210G, Color: 5522D, in "Cliffside" carpet, Style #50558, by Shaw Hospitality Group (guest rooms) to match Phase Three.

b. Carpet Tile: Not used.

c. Vinyl Composition Tile:
VCT-1: Color 2026 (Parchment Multi) in "Expressions" by Tarkett.

d. Sheet Vinyl: Not Used

e. Raised Pattern Rubber Floor at Stair Landings: Color to be "0749 Stone Grey" in Norament 920S.

f. Stair Treads, and Risers: Refer to (e) above.

g. Quarry Tile: Not used.

h. Ceramic Tile:
CT-2: Color to be DK-1440 (Honey) by Dal-Tile.

i. Threshold at Ceramic Tile: Color to be "Bone" by Corian.

j. Porcelain Tile: Not Used

k. Grout: Color to be "984 Almond" by TEC for Guest Room Bathroom Floor (CT-2).

l. Wood: Stain to match Formica 7008-43 Acajou Mahogony.

m. Static [Dissipative] [Conductive] Tile: Not used.

n. Concrete: Clear sealer (where noted on Room Finish Schedule).

2.2.5 Interior Base Finishes

Base materials shall be provided to match the colors listed below.

a. Resilient Base:
VB-1: Color to be #29 "Moon Rock" by Johnsonite.
VB-2: Not Used

b. Quarry Tile: Not used.

c. Ceramic Tile: Refer to CT-2 (2.2.4h) description.

d. Porcelain Tile: Not Used.

e. Grout: Refer to (2.2.4j) above.

2.2.6 Interior Wall Finishes

Interior wall color shall apply to the entire wall surface, including reveals, vertical furred spaces, grilles, diffusers, electrical and access panels, and piping and conduit adjacent to wall surfaces unless otherwise specified. Items not specified in other paragraphs shall be painted to match adjacent wall surface. Wall materials shall be provided to match the colors listed below.

a. Paint:
PT-1: Sherwin Williams, "Fresco Cream" (#SW100).
PT-2: Sherwin Williams "Chenille White" (#SW1102) in eggshell finish.
PT-3: Sherwin Williams "Sanderlings (#SW2030) in eggshell finish.

PT-4: Sherwin Williams, "Wickerwork" (#SW0010) in eggshell finish.
PT-5: Not used.
PT-6: Sherwin Williams, "Kaffe Tan" (SW#1111) in eggshell finish.
PT-7: Sherwin Williams, "Irish Cream" (#SW1115) in semigloss finish.

See Room Finish Schedule for Locations.

b. Vinyl Wall Covering: Not used.

c. Fabric Wall Covering: Not used.

d. Ceramic Tile:
CT-3: Color to be D-727 (Shell) by Dal-Tile.

e. Ceramic Tile Grout: Color to be "943 Victorian White" by TEC.

f. Acoustical Wall Covering: Not used.

g. Brick: Not used.

h. Metal Liner Panels: Not used.

i. Glazed Structural Units: Not used.

j. Prefaced Concrete Masonry Units: Not used.

k. Mortar: Not used.

l. Columns/Covers: Color to be PT-2.

m. Cultured Marble: Color to be A-40 "Blended Warm White" in matte finsh.

2.2.7 Interior Ceiling Finishes

Ceiling colors shall apply to ceiling surfaces including soffits, furred down areas, grilles, diffusers, registers, and access panels. Ceiling

color shall also apply to joist, underside of roof deck, and conduit and piping where joists and deck are exposed and required to be painted. Ceiling materials shall be provided to match the colors listed below.

a. Acoustical Tile and Grid: White.

b. Paint:
PT-2: Sherwin Williams, "Chenille White" (#SW1102) in flat finish.
PT-8: Sherwin Williams, "Pure White" (#SW1004) in flat finish.

c. Structural Framing: Not used.

d. Metal Deck: Not used.

e. Ceiling Spray Texture: White.

2.2.8 Interior Trim

Interior trim shall be provided to match the colors listed below.

a. Doors: At wood veneer doors, Stain to match Formica 7008-43 Acajou Mahogany. At wood painted doors, color to match PT-7: Sherwin Williams, "Irish Cream" (SW #1115)in satin finish.

b. Door Frames: Color to be PT-4 (semi-gloss finish).

c. Windows (mullion, muntin, sash, trim, and stool): Clear anodized aluminum.

d. Window Sills: Color to be Cultured Marble A40 Blended Warm White.

e. Fire Extinguisher Cabinets: Brushed stainless steel.

f. Handrails: Paint color to be PT-2 at Stairs.

g. Ladders: Not Used.

h. Metal Stairs: Color to be PT-2 for metal components.

i. Wood Stain: Wood stain to match color of Formica 7008-43 Acajou Mahogany.

2.2.9 Interior Window Treatment

Window treatments shall be provided to match the colors listed below.

a. Horizontal Blinds: #34 Brushed Aluminum (dust guard) by Riviera.

b. Vertical Blinds: Not used.

c. Integral Blinds: Not used.

d. Drapery Hardware: Not used.

2.2.10 Interior Miscellaneous

Miscellaneous items shall be provided to match the colors listed below.

a. Toilet Partitions and Urinal Screen: Not used.

b. Plastic Laminate:
PL-1: Not Used.
PL-2: Color to be "Ochre Tempura" (TM-2-1T) by Nevamar (textured finish). Guestroom casework.
PL-3: Not Used.
PL-4: Not Used.
PL-5: Not Used.

c. Signage Message Color (excluding handicapped signage): Color to be "Charcoal Gray" to match Phase Two signage.

d. Signage Background Color (excluding handicapped signage): Color to be "Light Grey" to match Phase Two signage.

e. Lockers: Not used.

f. Operable Partitions: Not used.

g. Corner Guards: Brushed stainless steel.

h. Wall Switch Handles and Standard Receptacle Bodies: Ivory.

i. Electrical Device Cover Plates and Panels: Ivory.

j. Casework: Refer to Drawings and Specification Section 06200.

k. Elevator Floor: Not Used.

l. Elevator Car Walls: Note Used

m. Guardrail: Not used.

n. Recessed Flooring/Mats: Color to be equal to "9305 Espresso" by Pedimat.

o. Recessed Floor Rail/Frame: Clear anodized aluminum.

p. Stone: Not used.

PART 3 EXECUTION (Not Applicable)

-- End of Section --

This page was intentionally left blank for duplex printing.

SECTION TABLE OF CONTENTS

DIVISION 10 - SPECIALTIES

SECTION 10214

EXTERIOR LOUVERS

7/99y

PART 1 GENERAL

1.1 REFERENCES
1.2 SUBMITTALS
1.3 Performance Requirements

PART 2 PRODUCTS

2.1 FIXED EXTRUDED LOUVERS
2.1.1 Standard Louvers (Louver Type L-21)
2.1.2 Narrow Profile Louvers (Louver Types L-1 and L1-A)
2.2 ACCESSORIES
2.2.1 Accessories
2.2.2 Sill Flashing
2.2.3 Blank Off Panels
2.2.3.1 Insulated
2.2.3.2 Blank Off Panels at Narrow Profile Louvers
2.2.4 Screens
2.3 FINISHES
2.3.1 Standard Louver Finish
2.3.2 Narrow Profile Louvers (Typical @ PTAC units)

PART 3 EXECUTION

3.1 INSTALLATION

-- End of Section Table of Contents --

SECTION 10214

EXTERIOR LOUVERS
7/99y

PART 1 GENERAL

1.1 REFERENCES

The publications listed below form a part of this specification to the extent referenced. The publications are referred to in the text by basic designation only.

AIR MOVEMENT CONTROL ASSOCIATION (AMCA)

AMCA 500	(1994) Test Method for Louvers, Dampers, and Shutters

AMERICAN SOCIETY FOR TESTING AND MATERIALS (ASTM)

ASTM B 209	(1996) Aluminum and Aluminum-Alloy Sheet and Plate
ASTM B 209M	(1995) Aluminum and Aluminum-Alloy Sheet and Plate (Metric)
ASTM B 221	(1996) Aluminum and Aluminum-Alloy Extruded Bars, Rods, Wire, Profiles, and Tubes
ASTM B 221M	(1996) Aluminum and Aluminum-Alloy Extruded Bars, Rods, Wire, Profiles, and Tubes (Metric)

1.2 SUBMITTALS

Government approval is required for submittals with a "G" designation; submittals not having a "G" designation are for information only. When used, a designation following the "G" designation identifies the office that will review the submittal for the Government. The following shall be submitted in accordance with Section 01330 SUBMITTAL PROCEDURES:

SD-02 Shop Drawings

Louvers; G-AE

Drawings showing, in large scale, the louver layout plan, profile of frame and installation details, relationship to adjacent construction, flashing, blade configuration connections to duct work, bird screens, and percentage of free air opening for each louver type.

SD-03 Product Data

Louvers;

Manufacturer's catalog data describing design characteristics, maximum recommended air velocity, design free area, materials, finishes, and performance characteristics..

1.3 Performance Requirements

Louvers shall be tested in accordance with AMCA 500 and shall bear the AMCA certified ratings seal for both air performance and water penetration when tested at a static pressure drop not exceeding 0.037 kPa (0.15 inches) water.

PART 2 PRODUCTS

2.1 FIXED EXTRUDED LOUVERS

Exterior wall louvers shall be fabricated of extruded aluminum ASTM B 221/ ASTM B 221M 6063 T5 alloy, conforming to ASTM B 209/ASTM B 209M. Louvers shall have continuous, horizontal blades with a mitered and all-welded extruded aluminum channel shape frame and shall provide a rigid and square self-supporting unit. Louver blades shall be fixed type with a 45 degree slope.

2.1.1 Standard Louvers (Louver Type L-21)

Standard profile louvers shall have the following

Frame Depth @ L-20	100 mm (4 inches)
Frame thickness	2.06 mm (0.081 inch)
Blade type	Drainable design
Blade thickness	2.06 mm (0.081 inch)
Percent free area	minimum 45%

Louver overall dimensions shall be as indicated on drawings. Furnish with bird screen, standard extended sill and angle clips for mounting at head, jambs and sill. Refer to drawings for louver locations.

2.1.2 Narrow Profile Louvers (Louver Types L-1 and L1-A)

Narrow profile louvers shall have the following

Frame Depth	38 mm (1-1/2 inches)
Frame thickness	1.60 mm (.063 inch)
Blade type	standard design
Blade thickness	1.60 mm (.063 inch)
Percent free area	minimum 45%

Louver overall dimensions shall be as indicated on drawings. Furnish with insect screen, standard extended sill and angle clips for mounting at head, jambs and sill. Refer to drawings for louver locations.

2.2 ACCESSORIES

2.2.1 Accessories

Louver accessories shall include recessed mullions, angle flange and wall anchors for installation in concrete wall back-up.

2.2.2 Sill Flashing

Sill flashing shall be of same material and thickness as louver blade, in

color and finish to match louvers. Provide manufacturer's standard profile in locations shown on drawings.

2.2.3 Blank Off Panels

2.2.3.1 Insulated

Insulated blank off panels shall be 50 mm (2 inches) thick, with rigid insulation core, of same material, finish and color as as louver blades. Secure blank off cover panels to back face (interior) of louver frame. Refer to Drawings for locations and details.

2.2.3.2 Blank Off Panels at Narrow Profile Louvers

Blank off panels shall be of same material, finish and color as louver blades and frame. Secure to back face (interior) of louver frame. Refer to Drawings for locations and details.

2.2.4 Screens

Bird screens shall be of 13 mm (1/2 inch) mesh removable mill finish aluminum bird screens. Insect screens shall be framed aluminum 0.312 mm (0.0123 inch) mesh mill finish insect screens.

2.3 FINISHES

2.3.1 Standard Louver Finish

Exposed surfaces of louvers are to receive a coil-coated 70% Kynar 500 or Hylar 5000 based, two coat polyvinylidene fluoride resin finish in conformance with the general requirements of AAMA 605.2-92. Colors to be as shown in 09915 COLOR SCHEDULE.

2.3.2 Narrow Profile Louvers (Typical @ PTAC units)

Exposed surfaces of louvers shall be finished with anodic coating conforming to AA-M10-C22-A31, clear anodic coating, thick, 204-R1 Natural Color. Finish shall be free of scratches and other blemishes.

PART 3 EXECUTION

3.1 INSTALLATION

Install louvers in accordance with manufacturer's instructions and approved shop drawings. Secure louvers rigid with fasteners to suit substrate materials. Coordinate installation method with application of mechanical work. Install perimeter sealant and backing rod in accordance with Section 07900 JOINT SEALING.

-- End of Section --

SECTION TABLE OF CONTENTS

DIVISION 10 - SPECIALTIES

SECTION 10260

WALL AND CORNER PROTECTION

12/95

PART 1 GENERAL

1.1 REFERENCES
1.2 SUBMITTALS
1.3 DELIVERY AND STORAGE
1.4 WARRANTY

PART 2 PRODUCTS

2.1 GENERAL
2.2 CORNER GUARDS
2.2.1 Not Used
2.2.2 Stainless Steel Corner Guards
2.3 Not Used
2.4 Not Used
2.5 Not Used
2.6 FASTENERS AND ANCHORS
2.7 FINISH
2.7.1 Not Used
2.7.2 Stainless Steel Finish
2.8 ADHESIVES

PART 3 EXECUTION

3.1 INSTALLATION
3.1.1 Corner Guards

-- End of Section Table of Contents --

SECTION 10260

WALL AND CORNER PROTECTION
12/95

PART 1 GENERAL

1.1 REFERENCES

The publications listed below form a part of this specification to the extent referenced. The publications are referred to in the text by basic designation only.

AMERICAN SOCIETY FOR TESTING AND MATERIALS (ASTM)

ASTM A 167	(1996) Stainless and Heat-Resisting Chromium-Nickel Steel Plate, Sheet, and Strip

NATIONAL ASSOCIATION OF ARCHITECTURAL METAL MANUFACTURERS (NAAMM)

NAAMM AMP 500 Manual	(1988) Metal Finishes Manual for Architectural and Metal Products

1.2 SUBMITTALS

Government approval is required for submittals with a "G" designation; submittals not having a "G" designation are for information only. When used, a designation following the "G" designation identifies the office that will review the submittal for the Government. The following shall be submitted in accordance with Section 01330 SUBMITTAL PROCEDURES:

SD-03 Product Data

Corner Guards;

Manufacturer's descriptive data, catalog cuts, installation instructions, and recommended cleaning instructions.

SD-04 Samples

Finish;

Manufacturer's standard samples indicating color and texture of materials requiring color and finish selection.

1.3 DELIVERY AND STORAGE

Materials shall be delivered to the project site in manufacturer's original unopened containers with seals unbroken and labels and trademarks intact. Materials shall be kept dry, protected from weather and damage, and stored under cover. Materials shall be stored at approximately (70 degrees F) for at least 48 hours prior to installation.

1.4 WARRANTY

Manufacturer's standard performance guarantees or warranties that extend beyond a 1 year period shall be provided.

PART 2 PRODUCTS

2.1 GENERAL

To the maximum extent possible, corner guards, shall be the standard products of a single manufacturer and shall be furnished as detailed. Drawings show locations of products required.

2.2 CORNER GUARDS

2.2.1 Not Used

2.2.2 Stainless Steel Corner Guards

Stainless steel corner guards shall be fabricated of thick material conforming to ASTM A 167, type 302 or 304. Corner guards shall be high and formed to dimensions of 50 by 50 mm (2 by 2 inch).

2.3 Not Used

2.4 Not Used

2.5 Not Used

2.6 FASTENERS AND ANCHORS

Fasteners and anchors shall be provided for each specific installation as shown.

2.7 FINISH

2.7.1 Not Used

2.7.2 Stainless Steel Finish

Finish for stainless steel shall be in accordance with NAAMM AMP 500 Manual, finish number 4 (brushed).

2.8 ADHESIVES

Adhesive for corner guard material shall be in accordance with manufacturers recommendations.

PART 3 EXECUTION

3.1 INSTALLATION

3.1.1 Corner Guards

Material shall be mounted at location indicated on Drawings in accordance with manufacturer's recommendations.

-- End of Section --

This page was intentionally left blank for duplex printing.

SECTION TABLE OF CONTENTS

DIVISION 10 - SPECIALTIES

SECTION 10440

INTERIOR SIGNAGE

06/98

PART 1 GENERAL

1.1 REFERENCES
1.2 GENERAL
1.2.1 Character Proportions and Heights
1.2.2 Raised and Brailled Characters and Pictorial Symbol Signs (Pictograms)
1.3 SUBMITTALS
1.4 QUALIFICATIONS
1.5 DELIVERY AND STORAGE
1.6 EXTRA STOCK

PART 2 PRODUCTS

2.1 ROOM IDENTIFICATION/DIRECTIONAL SIGNAGE SYSTEM
2.1.1 Standard Room Signs
2.1.2 Not Used
2.1.3 Type of Mounting For Signs
2.1.4 Graphics
2.2 Not Used
2.3 Not Used
2.4 Not Used
2.5 ALUMINUM ALLOY PRODUCTS
2.6 Not Used >
2.7 Not Used
2.8 FABRICATION AND MANUFACTURE
2.8.1 Factory Workmanship
2.8.2 Dissimilar Materials
2.9 COLOR, FINISH, AND CONTRAST

PART 3 EXECUTION

3.1 INSTALLATION
3.1.1 Anchorage
3.1.2 Protection and Cleaning

-- End of Section Table of Contents --

SECTION 10440

INTERIOR SIGNAGE
06/98

PART 1 GENERAL

1.1 REFERENCES

The publications listed below form a part of this specification to the extent referenced. The publications are referred to in the text by basic designation only.

AMERICAN NATIONAL STANDARDS INSTITUTE (ANSI)

ANSI Z97.1	(1984; Rev 1994) Safety Performance Specifications and Methods of Test for Safety Glazing Materials Used in Buildings

AMERICAN SOCIETY FOR TESTING AND MATERIALS (ASTM)

ASTM B 209	(1996) Aluminum and Aluminum-Alloy Sheet and Plate
ASTM B 209M	(1995) Aluminum and Aluminum-Alloy Sheet and Plate (Metric)
ASTM B 221	(1996) Aluminum and Aluminum-Alloy Extruded Bars, Rods, Wire, Profiles, and Tubes
	(1996) Aluminum and Aluminum-Alloy Extruded Bars, Rods, Wire, Profiles, and Tubes (Metric)

AMERICAN WELDING SOCIETY (AWS)

AWS D1.2	(1990) Structural Welding Code - Aluminum

1.2 GENERAL

Interior signage shall be of the design, detail, sizes, types, and message content shown on Drawing A8.11 and in the Signage Matrix (attached to this Specification Section), and shall conform to the requirements specified, and shall be provided at the locations indicated. Signs shall be complete with lettering, framing as detailed, and related components for a complete installation.

1.2.1 Character Proportions and Heights

Letters and numbers on indicated signs in handicapped-accessible buildings, which do not designate permanent rooms or spaces, shall have a width-to-height ratio between 3:5 and 1:1 and a stroke-width-to-height ratio between 1:5 and 1:10. Characters and numbers on indicated signs shall be sized according to the viewing distance from which they are to be

read. The minimum height is measured using an upper case letter "X". Lower case characters are permitted. Suspended or projected overhead signs shall have a minimum character height of 75 mm (3 inches).

1.2.2 Raised and Brailled Characters and Pictorial Symbol Signs (Pictograms)

Letters and numbers on indicated signs which designate permanent rooms and spaces in handicapped-accessible buildings shall be raised 0.8 mm (1/32 inch) upper case, sans serif or simple serif type and shall be accompanied with Grade 2 Braille. Raised characters shall be at least 16 mm (5/8 inch) in height, but no higher than 50 mm (2 inches). Pictograms shall be accompanied by the equivalent verbal description placed directly below the pictogram. The border dimension of the pictogram shall be 152 mm (6 inches) minimum in height. Indicated accessible facilities shall use the international symbol of accessibility.

1.3 SUBMITTALS

Government approval is required for submittals with a "G" designation; submittals not having a "G" designation are for information only. When used, a designation following the "G" designation identifies the office that will review the submittal for the Government. The following shall be submitted in accordance with Section 01330 SUBMITTAL PROCEDURES:

SD-02 Shop Drawings

Interior Signage; G-AE

Drawings showing elevations of each type of sign, dimensions, details and methods of mounting or anchoring, shape and thickness of materials, and details of construction. A schedule showing the location, each sign type, and message shall be included.

SD-03 Product Data

Interior Signage; G-AE

Manufacturer's descriptive data, catalogs cuts, installation and cleaning instructions.

SD-04 Samples

Interior Signage; G-AE

One sample of each of the following sign types showing typical quality and workmanship. The samples may be installed in the work, provided each sample is identified and location recorded.

a. Directional sign.

b. Door identification sign.

Two samples of manufacturer's standard color chips for each material requiring color selection.

1.4 QUALIFICATIONS

Signs letters shall be the standard product of a manufacturer regularly engaged in the manufacture of such products and shall essentially duplicate

signs that have been in satisfactory use at least 2 years prior to bid opening.

1.5 DELIVERY AND STORAGE

Materials shall be delivered to the jobsite in manufacturer's original packaging and stored in a clean, dry area in accordance with manufacturer's instructions.

1.6 EXTRA STOCK

The Contractor shall provide three extra room identification frames and related blank plates of color and size specified.

PART 2 PRODUCTS

2.1 ROOM IDENTIFICATION/DIRECTIONAL SIGNAGE SYSTEM

Signs shall be fabricated of acrylic plastic conforming to ANSI Z97.1.

2.1.1 Standard Room Signs

Signs shall consist of matte finish acrylic plastic with frames of molded acrylic. Corners of signs shall be squared.

2.1.2 Not Used

2.1.3 Type of Mounting For Signs

Extruded aluminum brackets, mounted as shown, shall be furnished for hanging, projecting, and double-sided signs. Mounting for framed, hanging, and projecting signs shall be by mechanical fasteners. Surface mounted signs shall be provided with countersunk mounting holes in plaques and mounting screws. Sign inserts shall be provided with (1/16 inch) thick foam tape.

2.1.4 Graphics

Signage graphics for modular identification/directional signs shall conform to the following:

Acrylic letters (1/8 inch) thick and chemically welded to (0.125 inch) thick acrylic backup sheet.

2.2 Not Used

2.3 Not Used

2.4 Not Used

2.5 ALUMINUM ALLOY PRODUCTS

Aluminum extrusions shall be at least 3 mm (1/8 inch) thick, and aluminum plate or sheet shall be at least 1.3 mm (0.0508 inch) thick. Extrusions shall conform to ASTM B 221M (ASTM B 221); plate and sheet shall conform to ASTM B 209M (ASTM B 209). Aluminum shall have mill finish, unless otherwise indicated. Welding for aluminum products shall conform to AWS D1.2.

2.6 Not Used
>
2.7 Not Used

2.8 FABRICATION AND MANUFACTURE

2.8.1 Factory Workmanship

Holes for bolts and screws shall be drilled or punched. Drilling and punching shall produce clean, true lines and surfaces. Exposed surfaces of work shall have a smooth finish and exposed riveting shall be flush. Fastenings shall be concealed where practicable.

2.8.2 Dissimilar Materials

Where dissimilar metals are in contact, the surfaces will be protected to prevent galvanic or corrosive action.

2.9 COLOR, FINISH, AND CONTRAST

Color shall be in accordance with Section 09915 COLOR SCHEDULE. In buildings required to be handicapped-accessible, the characters and background of signs shall be eggshell, matte, or other non-glare finish. Characters and symbols shall contrast with their background - either light characters on a dark background or dark characters on a light background.

PART 3 EXECUTION

3.1 INSTALLATION

Signs shall be installed in accordance with approved manufacturer's instructions at locations shown on the drawings and the attached signage schedule. Signs shall be installed plumb and true at mounting heights indicated, and by method shown or specified. Required blocking shall be installed where recommended by sign manufacturer. Signs which designate permanent rooms and spaces in handicapped-accessible buildings shall be installed on the wall adjacent to the latch side of the door. Where there is no wall space to the latch side of the door, including at double leaf doors, signs shall be placed on the nearest adjacent wall. Mounting location for such signage shall be so that a person may approach within 75 mm (3 inches) of signage without encountering protruding objects or standing within the swing of a door. Signs on doors or other surfaces shall not be installed until finishes on such surfaces have been installed. Signs installed on glass surfaces shall be installed with matching blank back-up plates in accordance with manufacturer's instructions.

3.1.1 Anchorage

Anchorage shall be in accordance with approved manufacturer's instructions. Anchorage not otherwise specified or shown shall include slotted inserts, expansion shields, and powder-driven fasteners when approved for concrete; toggle bolts and through bolts for masonry; machine carriage bolts for steel; lag bolts and screws for wood. Exposed anchor and fastener materials shall be compatible with metal to which applied and shall have matching color and finish. Signs mounted to painted gypsum board surfaces shall be removable for painting maintenance. Signs mounted to lay-in ceiling grids shall be mounted with clip connections to ceiling tees.

3.1.2 Protection and Cleaning

The work shall be protected against damage during construction. Hardware and electrical equipment shall be adjusted for proper operation. Glass, frames, and other sign surfaces shall be cleaned in accordance with the manufacturer's approved instructions.

-- End of Section --

Phase Four West Wing - First Floor Signage Matrix

Item	Constr. . Room No.	New Room No.	New Door No.	Constr. Door No.	Construction Room Name	Sign Types	Signage Text Room Name	Braille	Quantity	Notes:
1	1159			1159	Vestibule	BB4	FIRST FLOOR	Yes	1	Locate at vestibule side
2	1161	Verify w/ Gov't		1161	Guest Room	BB4	W-XXX*	Yes	1	
3	1162	Verify w/ Gov't		1162	Guest Room	BB4	W-XXX*	Yes	1	
4	1163	Verify w/ Gov't		1163	Guest Room	BB4	W-XXX*	Yes	1	
5	1164	Verify w/ Gov't		1164	Guest Room	BB4	W-XXX*	Yes	1	
6	1165	Verify w/ Gov't		1165	Guest Room	BB4	W-XXX*	Yes	1	
7	1166	Verify w/ Gov't		1166	Guest Room	BB4	W-XXX*	Yes	1	
8	1167	Verify w/ Gov't		1167	Guest Room	BB4	W-XXX*	Yes	1	
9	1168	Verify w/ Gov't		1168	Guest Room	BB4	W-XXX*	Yes	1	
10	1169	Verify w/ Gov't		1169	Guest Room	BB4	W-XXX*	Yes	1	
11	1170	Verify w/ Gov't		1170	Guest Room	BB4	W-XXX*	Yes	1	
12	1171	Verify w/ Gov't		1171	Guest Room	BB4	W-XXX*	Yes	1	
13	1172	Verify w/ Gov't		1172	Guest Room	BB4	W-XXX*	Yes	1	
14	1173	Verify w/ Gov't		1173	Guest Room	BB4	W-XXX*	Yes	1	
15	1174	Verify w/ Gov't		1174	Guest Room	BB4	W-XXX*	Yes	1	
16	103			103	Stair C	BB4	FIRST FLOOR	Yes	1	Mount on stair side
							* Verify Room number with Contracting Officer			

This page was intentionally left blank for duplex printing.

Phase Four West Wing - Second Floor Signage Matrix

Item	Constr. . Room No.	New Room No.	New Door No.	Constr. Door No.	Construction Room Name	Sign Types	Signage Text Room Name	Braille	Quantity	Notes:
1	2159			203	Vestibule	BB4	EXIT STAIR	Yes	1	Locate at entry side
2	2161	Verify w/ Gov't		2161	Guest Room	BB4	W-XXX*	Yes	1	
3	2162	Verify w/ Gov't		2162	Guest Room	BB4	W-XXX*	Yes	1	
4	2163	Verify w/ Gov't		2163	Guest Room	BB4	W-XXX*	Yes	1	
5	2164	Verify w/ Gov't		2164	Guest Room	BB4	W-XXX*	Yes	1	
6	2165	Verify w/ Gov't		2165	Guest Room	BB4	W-XXX*	Yes	1	
7	2166	Verify w/ Gov't		2166	Guest Room	BB4	W-XXX*	Yes	1	
8	2167	Verify w/ Gov't		2167	Guest Room	BB4	W-XXX*	Yes	1	
9	2168	Verify w/ Gov't		2168	Guest Room	BB4	W-XXX*	Yes	1	
10	2169	Verify w/ Gov't		2169	Guest Room	BB4	W-XXX*	Yes	1	
11	2170	Verify w/ Gov't		2170	Guest Room	BB4	W-XXX*	Yes	1	
12	2171	Verify w/ Gov't		2171	Guest Room	BB4	W-XXX*	Yes	1	
13	2172	Verify w/ Gov't		2172	Guest Room	BB4	W-XXX*	Yes	1	
14	2173	Verify w/ Gov't		2173	Guest Room	BB4	W-XXX*	Yes	1	
15	2174	Verify w/ Gov't		2174	Guest Room	BB4	W-XXX*	Yes	1	
16	203			203	Stair C	BB4	SECOND FLOOR	Yes	1	Mount on stair side
							* Verify Room number with Contracting Officer			

This page was intentionally left blank for duplex printing.

Phase Four West Wing - Third Floor Signage Matrix

Item	Constr. . Room No.	New Room No.	New Door No.	Constr. Door No.	Construction Room Name	Sign Types	Signage Text Room Name	Braille	Quantity	Notes:
1	3159			3159	Vestibule	BB4	EXIT STAIR	Yes	1	Locate at entry side
2	3161	Verify w/ Gov't		3161	Guest Room	BB4	W-XXX*	Yes	1	
3	3162	Verify w/ Gov't		3162	Guest Room	BB4	W-XXX*	Yes	1	
4	3163	Verify w/ Gov't		3163	Guest Room	BB4	W-XXX*	Yes	1	
5	3164	Verify w/ Gov't		3164	Guest Room	BB4	W-XXX*	Yes	1	
6	3165	Verify w/ Gov't		3165	Guest Room	BB4	W-XXX*	Yes	1	
7	3166	Verify w/ Gov't		3166	Guest Room	BB4	W-XXX*	Yes	1	
8	3167	Verify w/ Gov't		3167	Guest Room	BB4	W-XXX*	Yes	1	
9	3168	Verify w/ Gov't		3168	Guest Room	BB4	W-XXX*	Yes	1	
10	3169	Verify w/ Gov't		3169	Guest Room	BB4	W-XXX*	Yes	1	
11	3170	Verify w/ Gov't		3170	Guest Room	BB4	W-XXX*	Yes	1	
12	3171	Verify w/ Gov't		3171	Guest Room	BB4	W-XXX*	Yes	1	
13	3172	Verify w/ Gov't		3172	Guest Room	BB4	W-XXX*	Yes	1	
14	3173	Verify w/ Gov't		3173	Guest Room	BB4	W-XXX*	Yes	1	
15	3174	Verify w/ Gov't		3174	Guest Room	BB4	W-XXX*	Yes	1	
16	303			303	Stair C	BB4	THIRD FLOOR	Yes	1	Mount on stair side
							* Verify Room number with Contracting Officer			

This page was intentionally left blank for duplex printing.

Phase Four West Wing - Fourth Floor Signage Matrix

Item	Constr. . Room No.	New Room No.	New Door No.	Constr. Door No.	Construction Room Name	Sign Types	Signage Text Room Name	Braille	Quantity	Notes:
1	4159			4159	Vestibule	BB4	EXIT STAIR	Yes	1	Locate at entry side
2	4161	Verify w/ Gov't		4161	Guest Room	BB4	W-XXX*	Yes	1	
3	4162	Verify w/ Gov't		4162	Guest Room	BB4	W-XXX*	Yes	1	
4	4163	Verify w/ Gov't		4163	Guest Room	BB4	W-XXX*	Yes	1	
5	4164	Verify w/ Gov't		4164	Guest Room	BB4	W-XXX*	Yes	1	
6	4165	Verify w/ Gov't		4165	Guest Room	BB4	W-XXX*	Yes	1	
7	4166	Verify w/ Gov't		4166	Guest Room	BB4	W-XXX*	Yes	1	
8	4167	Verify w/ Gov't		4167	Guest Room	BB4	W-XXX*	Yes	1	
9	4168	Verify w/ Gov't		4168	Guest Room	BB4	W-XXX*	Yes	1	
10	4169	Verify w/ Gov't		4169	Guest Room	BB4	W-XXX*	Yes	1	
11	4170	Verify w/ Gov't		4170	Guest Room	BB4	W-XXX*	Yes	1	
12	4171	Verify w/ Gov't		4171	Guest Room	BB4	W-XXX*	Yes	1	
13	4172	Verify w/ Gov't		4172	Guest Room	BB4	W-XXX*	Yes	1	
14	4173	Verify w/ Gov't		4173	Guest Room	BB4	W-XXX*	Yes	1	
15	4174	Verify w/ Gov't		4174	Guest Room	BB4	W-XXX*	Yes	1	
16	403			403	Stair C	BB4	FOURTH FLOOR	Yes	1	Mount on stair side
							* Verify Room number with Contracting Officer			

This page was intentionally left blank for duplex printing.

SECTION TABLE OF CONTENTS

DIVISION 10 - SPECIALTIES

SECTION 10522

FIRE EXTINGUISHERS, CABINETS AND ACCESSORIES

7/99

PART 1 GENERAL

1.1 REFERENCES
1.2 SUBMITTALS

PART 2 PRODUCTS

2.1 FIRE EXTINGUISHER CABINETS - FIRE RATED
2.2 FIRE EXTINGUISHERS

PART 3 EXECUTION

3.1 INSTALLATION

-- End of Section Table of Contents --

SECTION 10522

FIRE EXTINGUISHERS, CABINETS AND ACCESSORIES
7/99

PART 1 GENERAL

1.1 REFERENCES

The publications listed below form a part of this specification to the extent referenced. The publications are referred to in the text by basic designation only.

AMERICAN SOCIETY FOR TESTING AND MATERIALS (ASTM)

ASTM E 814	(1994b) Test Method for Fire Tests of Through-Penetration Fire Stops

1.2 SUBMITTALS

Government approval is required for submittals with a "G" designation; submittals not having a "G" designation are for information only. When used, a designation following the "G" designation identifies the office that will review the submittal for the Government. The following shall be submitted in accordance with Section 01330 SUBMITTAL PROCEDURES:

SD-03 Product Data

Fire Extinguisher Cabinets;

Manufacturer's descriptive data and catalog cut sheets.

PART 2 PRODUCTS

2.1 FIRE EXTINGUISHER CABINETS - FIRE RATED

Semi-recessed fire extinguisher cabinets shall be similar to J.L. Industries design for Model No. "1037 V10 Cosmopolitan Series". Trim and door material shall be stainless steel with No. 4 satin finish. Trim style shall project 63 mm (2-1/2 inches) from wall plane and shall be of rolled edge construction with 31 mm (1-1/4 inch) trim face dimension. Flush cabinet doors shall be of formed design with 16 mm (5/8 inch) thickness, continuous door hinge, zinc plated pull handle and roller catch. Door style shall be contemporary with vertical view lite of 1/4 inch clear tempered glass. Lite shall extend from top to bottom of door less border width. Cabinet shall have tub inside dimensions of 10 1/2 inches wide by 24 inches high by 6 inches deep. Provide cabinets where indicated on drawings. Fire rated cabinets shall meet the requirements of ASTM E 814 and shall match the fire wall ratings in which they are installed.

2.2 FIRE EXTINGUISHERS

Fire extinguishers shall be provided by the Government.

PART 3 EXECUTION

3.1 INSTALLATION

Secure rigidly in place in accordance with manufacturer's instructions. Mount at ADA compliant mounting height.

-- End of Section --

This page was intentionally left blank for duplex printing.

SECTION TABLE OF CONTENTS

DIVISION 10 - SPECIALTIES

SECTION 10800

TOILET ACCESSORIES

08/98

PART 1 GENERAL

1.1 SUBMITTALS
1.2 DELIVERY, STORAGE, AND HANDLING
1.3 WARRANTY

PART 2 PRODUCTS

2.1 MANUFACTURED UNITS
2.1.1 Anchors and Fasteners
2.1.2 Finishes
2.2 ACCESSORY ITEMS
2.2.1 Facial Tissue Dispenser (FTD)
2.2.2 Not Used
2.2.3 Not Used
2.2.4 Not Used
2.2.5 Not Used
2.2.6 Not Used
2.2.7 Not Used
2.2.8 Not Used
2.2.9 Not Used
2.2.10 Not Used
2.2.11 Shower Curtain Rods (SCR)
2.2.12 Not Used
2.2.13 Soap Dish (SD)
2.2.14 Not Used
2.2.15 Towel Bar with Towel Shelf (TBWS)
2.2.16 Not Used
2.2.17 Towel Bar (TB)
2.2.18 Towel Pin (TP)
2.2.19 Toilet Tissue Dispenser (TTD)

PART 3 EXECUTION

3.1 INSTALLATION
3.2 CLEANING

-- End of Section Table of Contents --

SECTION 10800

TOILET ACCESSORIES
08/98

PART 1 GENERAL

1.1 SUBMITTALS

Government approval is required for submittals with a "G" designation; submittals not having a "G" designation are for information only. When used, a designation following the "G" designation identifies the office that will review the submittal for the Government. The following shall be submitted in accordance with Section 01330 SUBMITTAL PROCEDURES:

SD-03 Product Data

Accessory Items; G-AE

Manufacturer's descriptive data and catalog cuts indicating materials of construction, fasteners proposed for use for each type of wall construction, mounting instructions, operation instructions, and cleaning instructions.

1.2 DELIVERY, STORAGE, AND HANDLING

Toilet accessories shall be wrapped for shipment and storage, delivered to the jobsite in manufacturer's original packaging, and stored in a clean, dry area protected from construction damage and vandalism.

1.3 WARRANTY

Manufacturer's standard performance guarantees or warranties that extend beyond a 1 year period shall be provided.

PART 2 PRODUCTS

2.1 MANUFACTURED UNITS

Toilet accessories shall be provided where indicated in accordance with paragraph SCHEDULE. Cultured marble wall accessories are specified in Section 006200 FINISH CARPENTRY. Each accessory item shall be complete with the necessary mounting plates and shall be of sturdy construction with corrosion resistant surface.

2.1.1 Anchors and Fasteners

Anchors and fasteners shall be capable of developing a restraining force commensurate with the strength of the accessory to be mounted and shall be suited for use with the supporting construction. Exposed fasteners shall be of tamperproof design and shall be finished to match the accessory.

2.1.2 Finishes

Except where noted otherwise, finishes on metal shall be provided as

follows:

Metal	Finish
Stainless steel	No. 4 satin finish
Carbon steel, copper alloy, and brass	Chromium plated, bright

2.2 ACCESSORY ITEMS

Accessory items shall conform to the requirements specified below.

2.2.1 Facial Tissue Dispenser (FTD)

Facial tissue dispenser shall be recessed mounted, Type 304 stainless steel face, bright polished finish. Face of recessed dispenser shall be secured by friction with suitable spring steel clips. Dispenser shall have a minimum capacity of 150 two-ply tissues.

2.2.2 Not Used

2.2.3 Not Used

2.2.4 Not Used

2.2.5 Not Used

2.2.6 Not Used

2.2.7 Not Used

2.2.8 Not Used

2.2.9 Not Used

2.2.10 Not Used

2.2.11 Shower Curtain Rods (SCR)

Shower curtain rods shall be 18-gauge, (1 inch) OD, Type 304 stainless steel, satin finish in lengths to meet installation conditions. Mount on concealed wall brackets.

2.2.12 Not Used

2.2.13 Soap Dish (SD)

Soap dish holder shall be surface mounted cultured marble to match tub surrounds. Refer to 06200 FINISH CARPENTRY for information.

2.2.14 Not Used

2.2.15 Towel Bar with Towel Shelf (TBWS)

154 mm (6 1/4 inches) wide shelf consisting of four 8 mm (5/16 inch) diameter round tubes mounted in support arms. Towel bar below shelf. Finish shall be bright polished stainless steel.

2.2.16 Not Used

2.2.17 Towel Bar (TB)

Towel bar shall be round , non-rotating tube, in bright polished stainless steel finish with a minimum thickness of (.015 inch). Bar shall be minimum 19mm (3/4 inch) in diameter.

2.2.18 Towel Pin (TP)

Towel pin shall have concealed wall fastenings, and a pin integral with or permanently fastened to 50 x 50 mm (2 x 2 inch) wall flange. Maximum projection shall be (4 inches). Design shall be consistent with design of other accessory items. Finish shall be bright polished stainless steel.

2.2.19 Toilet Tissue Dispenser (TTD)

Toilet tissue holder shall be recess mounted (hoodless) for two rolls of standard tissue set horizontally on rollers, and shall be located in countertop apron of vanity. Housing shall be bright polished stainless steel finish.

PART 3 EXECUTION

3.1 INSTALLATION

Toilet accessories shall be securely fastened to the supporting construction in accordance with the manufacturer's approved instructions. Accessories shall be protected from damage from the time of installation until acceptance.

3.2 CLEANING

Material shall be cleaned in accordance with manufacturer's recommendations. Alkaline or abrasive agents shall not be used. Precautions shall be taken to avoid scratching or marring of surfaces.

-- End of Section --

SECTION TABLE OF CONTENTS

DIVISION 13 - SPECIAL CONSTRUCTION

SECTION 13280A

ASBESTOS ABATEMENT

11/01

PART 1 GENERAL

1.1 REFERENCES
1.2 DEFINITIONS
1.3 DESCRIPTION OF WORK
1.3.1 Abatement Work Tasks
1.3.2 Unexpected Discovery of Asbestos
1.4 SUBMITTALS
1.5 QUALIFICATIONS
1.5.1 Written Qualifications and Organization Report
1.5.2 Specific Requirements
1.5.3 Federal, State or Local Citations on Previous Projects
1.6 REGULATORY REQUIREMENTS
1.7 SAFETY AND HEALTH PROGRAM AND PLANS
1.7.1 Asbestos Hazard Abatement Plan Appendix
1.7.2 Activity Hazard Analyses Appendix
1.8 PRECONSTRUCTION CONFERENCE AND ONSITE SAFETY
1.9 SECURITY
1.10 MEDICAL REQUIREMENTS
1.10.1 Medical Examinations
1.10.1.1 Information Provided to the Physician
1.10.1.2 Written Medical Opinion
1.10.2 Medical and Exposure Records
1.11 TRAINING PROGRAM
1.11.1 General Training Requirements
1.11.2 Project Specific Training
1.12 RESPIRATORY PROTECTION PROGRAM
1.12.1 Respiratory Fit Testing
1.12.2 Respirator Selection and Use Requirements
1.12.3 Class I Work
1.12.4 Class II and III Work
1.12.5 Sanitation
1.13 HAZARD COMMUNICATION PROGRAM
1.14 LICENSES, PERMITS AND NOTIFICATIONS
1.14.1 General Legal Requirements
1.14.2 Litigation and Notification
1.15 PERSONAL PROTECTIVE EQUIPMENT
1.15.1 Respirators
1.15.2 Whole Body Protection
1.15.2.1 Coveralls
1.15.2.2 NOT USED
1.15.2.3 NOT USED
1.15.2.4 Gloves
1.15.2.5 Foot Coverings
1.15.2.6 Head Covering
1.15.2.7 Protective Eye Wear

1.16 HYGIENE FACILITIES AND PRACTICES
1.16.1 Shower Facilities
1.16.2 3-Stage Decontamination Area
1.16.3 Load-Out Unit
1.16.4 Single Stage Decontamination Area
1.16.5 NOT USED
1.16.6 Decontamination Area Entry Procedures
1.16.7 Decontamination Area Exit Procedures
1.16.8 Lunch Areas
1.16.9 Smoking
1.17 REGULATED AREAS
1.18 WARNING SIGNS AND TAPE
1.19 WARNING LABELS
1.20 LOCAL EXHAUST VENTILATION
1.21 TOOLS
1.22 RENTAL EQUIPMENT
1.23 AIR MONITORING EQUIPMENT
1.24 EXPENDABLE SUPPLIES
1.24.1 Glovebag
1.24.2 Duct Tape
1.24.3 Disposal Containers
1.24.4 Disposal Bags
1.24.5 NOT USED
1.24.6 Cardboard Boxes
1.24.7 Sheet Plastic
1.24.7.1 NOT USED
1.24.7.2 Reinforced
1.24.8 Amended Water
1.24.9 Mastic Removing Solvent
1.24.10 Leak-tight Wrapping
1.24.11 Viewing Inspection Window
1.24.12 Wetting Agents
1.24.13 Strippable Coating
1.25 MISCELLANEOUS ITEMS

PART 2 PRODUCTS

2.1 NOT USED
2.2 NOT USED
2.3 RECYCLABLE MATERIALS

PART 3 EXECUTION

3.1 GENERAL REQUIREMENTS
3.2 PROTECTION OF ADJACENT WORK OR AREAS TO REMAIN
3.3 OBJECTS
3.3.1 Removal of Mobile Objects
3.3.2 NOT USED
3.3.3 NOT USED
3.4 BUILDING VENTILATION SYSTEM AND CRITICAL BARRIERS
3.5 PRECLEANING
3.6 METHODS OF COMPLIANCE
3.6.1 Mandated Practices
3.6.2 Control Methods
3.6.3 Unacceptable Practices
3.6.4 Class I Work Procedures
3.6.5 Specific Control Methods for Class I Work
3.6.5.1 Negative Pressure Enclosure (NPE) System
3.6.5.2 Glovebag Systems

3.6.5.3 Mini-Enclosures
3.6.5.4 Wrap and Cut Operation
3.6.6 Class II Work
3.6.7 Specific Control Methods for Class II Work
3.6.7.1 Vinyl and Asphalt Flooring Materials
3.6.7.2 NOT USED
3.6.7.3 Cementitious Siding and Shingles or Transite Panels
3.6.7.4 NOT USED
3.6.7.5 Other Class II Jobs
3.6.8 NOT USED
3.6.9 NOT USED
3.6.10 NOT USED
3.6.11 Cleaning After Asbestos Removal
3.6.12 Class I Asbestos Work Response Action Detail Sheets
3.6.13 Class II Asbestos Work Response Action Detail Sheets
3.6.14 NOT USED
3.6.15 NOT USED
3.6.16 NOT USED
3.6.17 NOT USED
3.6.18 NOT USED
3.6.19 NOT USED
3.6.20 NOT USED
3.6.21 Sealing Contaminated Items Designated for Disposal
3.7 FINAL CLEANING AND VISUAL INSPECTION
3.8 NOT USED
3.9 EXPOSURE ASSESSMENT AND AIR MONITORING
3.9.1 General Requirements For Exposure
3.9.2 Initial Exposure Assessment
3.9.3 Negative Exposure Assessment
3.9.4 NOT USED
3.9.5 Preabatement Environmental Air Monitoring
3.9.6 Environmental Air Monitoring During Abatement
3.9.7 Final Clearance Air Monitoring
3.9.7.1 Final Clearance Requirements, NIOSH PCM Method
3.9.7.2 Final Clearance Requirements, EPA TEM Method
3.9.7.3 Air Clearance Failure
3.9.8 Air-Monitoring Results and Documentation
3.10 CLEARANCE CERTIFICATION
3.11 CLEANUP AND DISPOSAL
3.11.1 Title to ACM Materials
3.11.2 Collection and Disposal of Asbestos
3.11.3 Scale Weight Measurement
3.11.4 Weigh Bill and Delivery Tickets
3.11.5 Asbestos Waste Shipment Record

-- End of Section Table of Contents --

SECTION 13280A

ASBESTOS ABATEMENT
11/01

PART 1 GENERAL

Two buildings have been identified for demolition: Bldg 711 and Bldg 715.

Bldg 711 has been heavily renovated and may contain asbestos - survey refers to it as "suspect". The Contractor shall collect thirty (30) samples (in accordance with Minnesota Rule 4620.3460) of various homogeneous systems in Bldg 711 to demonstrate to State regulators that Bldg 711 has no ACM remaining prior to demolition. If ACM is identified during sampling, it will be removed in accordance with this SECTION.

Bldg 715 has had few minor modifications since it was constructed in the 1940s and asbestos containing material (ACM) has been identified and quantified.

Attachments: Detail Sheets 1, 3, 4, 5, 6, 7, 8, 9A, 9B, 9C, 10, 11, 12, 13, 14, 15, 16, 17, 18, 19, 20, 22, 23, 25, 45, 56, 57, 58, 59, 60, 61, 62, 64, 68, 81, 86, 87, 88, and 89

1.1 REFERENCES

The publications listed below form a part of this specification to the extent referenced. The publications are referred to in the text by basic designation only.

AMERICAN NATIONAL STANDARDS INSTITUTE (ANSI)

ANSI Z87.1	(1989; Errata; Z87.1a) Occupational and Educational Eye and Face Protection
ANSI Z88.2	(1992) Respiratory Protection
ANSI Z9.2	(1979; R 1991) Fundamentals Governing the Design and Operation of Local Exhaust Systems

AMERICAN SOCIETY FOR TESTING AND MATERIALS (ASTM)

ASTM D 1331	(1989; R 1995) Surface and Interfacial Tension of Solutions of Surface-Active Agents
ASTM E 1368	(2000) Visual Inspection of Asbestos Abatement Projects

COMPRESSED GAS ASSOCIATION (CGA)

CGA G-7	(1990) Compressed Air for Human Respiration

CGA G-7.1	(1997) Commodity Specification for Air

NATIONAL FIRE PROTECTION ASSOCIATION (NFPA)

NFPA 701	(1999) Methods of Fire Tests for Flame-Resistant Textiles and Films

NATIONAL INSTITUTE FOR OCCUPATIONAL SAFETY AND HEALTH (NIOSH)

NIOSH 84-100	(1984; Supple 1985, 1987, 1988 & 1990) NIOSH Manual of Analytical Methods

U.S. ARMY CORPS OF ENGINEERS (USACE)

EM 385-1-1	(1996) U.S. Army Corps of Engineers Safety and Health Requirements Manual

U.S. ENVIRONMENTAL PROTECTION AGENCY (EPA)

EPA 340/1-90/018	(1990) Asbestos/NESHAP Regulated Asbestos Containing Materials Guidance
EPA 340/1-90/019	(1990) Asbestos/NESHAP Adequately Wet Guidance
EPA 560/5-85-024	(1985) Guidance for Controlling Asbestos-Containing Materials in Buildings

U.S. NATIONAL ARCHIVES AND RECORDS ADMINISTRATION (NARA)

29 CFR 1910	Occupational Safety and Health Standards
29 CFR 1926	Safety and Health Regulations for Construction
40 CFR 61	National Emission Standards for Hazardous Air Pollutants
40 CFR 763	Asbestos
42 CFR 84	Approval of Respiratory Protective Devices
49 CFR 107	Hazardous Materials Program Procedures
49 CFR 171	General Information, Regulations, and Definitions
49 CFR 172	Hazardous Materials Table, Special Provisions, Hazardous Materials Communications, Emergency Response Information, and Training Requirements
49 CFR 173	Shippers - General Requirements for Shipments and Packagings

UNDERWRITERS LABORATORIES (UL)

UL 586	(1996; Rev thru Aug 1999) High-Efficiency, Particulate, Air Filter Units

1.2 DEFINITIONS

a. Adequately Wet: A term defined in 40 CFR 61, Subpart M, and EPA 340/1-90/019 meaning to sufficiently mix or penetrate with liquid to prevent the release of particulate. If visible emissions are observed coming from asbestos-containing material (ACM), then that material has not been adequately wetted. However, the absence of visible emissions is not sufficient evidence of being adequately wetted.

b. Aggressive Method: Removal or disturbance of building material by sanding, abrading, grinding, or other method that breaks, crumbles, or disintegrates intact asbestos-containing material (ACM).

c. Amended Water: Water containing a wetting agent or surfactant with a surface tension of at least 29 dynes per square centimeter when tested in accordance with ASTM D 1331.

d. Asbestos: Asbestos includes chrysotile, amosite, crocidolite, tremolite asbestos, anthophylite asbestos, actinolite asbestos, and any of these minerals that have been chemically treated and/or altered.

e. Asbestos-Containing Material (ACM): Any materials containing more than one percent asbestos.

f. Asbestos Fiber: A particulate form of asbestos, 5 micrometers or longer, with a length-to-width ratio of at least 3 to 1.

g. Authorized Person: Any person authorized by the Contractor and required by work duties to be present in the regulated areas.

h. Building Inspector: Individual who inspects buildings for asbestos and has EPA Model Accreditation Plan (MAP) "Building Inspector" training; accreditation required by 40 CFR 763, Subpart E, Appendix C.

i. Certified Industrial Hygienist (CIH): An Industrial Hygienist certified in the practice of industrial hygiene by the American Board of Industrial Hygiene.

j. Class I Asbestos Work: Activities defined by OSHA involving the removal of thermal system insulation (TSI) and surfacing ACM.

k. Class II Asbestos Work: Activities defined by OSHA involving the removal of ACM which is not thermal system insulation or surfacing material. This includes, but is not limited to, the removal of asbestos - containing wallboard, floor tile and sheeting, roofing and siding shingles, and construction mastic. Certain "incidental" roofing materials such as mastic, flashing and cements when they are still intact are excluded from Class II

asbestos work. Removal of small amounts of these materials which would fit into a glovebag may be classified as a Class III job.

l. Class III Asbestos Work: Activities defined by OSHA that involve repair and maintenance operations, where ACM, including TSI and surfacing ACM, is likely to be disturbed. Operations may include drilling, abrading, cutting a hole, cable pulling, crawling through tunnels or attics and spaces above the ceiling, where asbestos is actively disturbed or asbestos-containing debris is actively disturbed.

m. Class IV Asbestos Work: Maintenance and custodial construction activities during which employees contact but do not disturb ACM and activities to clean-up dust, waste and debris resulting from Class I, II, and III activities. This may include dusting surfaces where ACM waste and debris and accompanying dust exists and cleaning up loose ACM debris from TSI or surfacing ACM following construction.

n. Clean room: An uncontaminated room having facilities for the storage of employees' street clothing and uncontaminated materials and equipment.

o. Competent Person: In addition to the definition in 29 CFR 1926, Section .32(f), a person who is capable of identifying existing asbestos hazards as defined in 29 CFR 1926, Section .1101, selecting the appropriate control strategy, has the authority to take prompt corrective measures to eliminate them and has EPA Model Accreditation Plan (MAP) "Contractor/Supervisor" training; accreditation required by 40 CFR 763, Subpart E, Appendix C.

p. Contractor/Supervisor: Individual who supervises asbestos abatement work and has EPA Model Accreditation Plan "Contractor/Supervisor" training; accreditation required by 40 CFR 763, Subpart E, Appendix C.

q. Critical Barrier: One or more layers of plastic sealed over all openings into a regulated area or any other similarly placed physical barrier sufficient to prevent airborne asbestos in a regulated area from migrating to an adjacent area.

r. Decontamination Area: An enclosed area adjacent and connected to the regulated area and consisting of an equipment room, shower area, and clean room, which is used for the decontamination of workers, materials, and equipment that are contaminated with asbestos.

s. Demolition: The wrecking or taking out of any load-supporting structural member and any related razing, removing, or stripping of asbestos products.

t. Disposal Bag: A 6 mil thick, leak-tight plastic bag, pre-labeled in accordance with 29 CFR 1926, Section .1101, used for transporting asbestos waste from containment to disposal site.

u. Disturbance: Activities that disrupt the matrix of ACM, crumble or pulverize ACM, or generate visible debris from ACM. Disturbance includes cutting away small amounts of ACM, no greater than the amount which can be contained in 1 standard sized

glovebag or waste bag, not larger than 60 inches in length and width in order to access a building component.

v. Equipment Room or Area: An area adjacent to the regulated area used for the decontamination of employees and their equipment.

w. Employee Exposure: That exposure to airborne asbestos that would occur if the employee were not using respiratory protective equipment.

x. Fiber: A fibrous particulate, 5 micrometers or longer, with a length to width ratio of at least 3 to 1.

y. Friable ACM: A term defined in 40 CFR 61, Subpart M and EPA 340/1-90/018 meaning any material which contains more than 1 percent asbestos, as determined using the method specified in 40 CFR 763, Subpart E, Appendix A, Section 1, Polarized Light Microscopy (PLM), that when dry, can be crumbled, pulverized, or reduced to powder by hand pressure. If the asbestos content is less than 10 percent, as determined by a method other than point counting by PLM, the asbestos content is verified by point counting using PLM.

z. Glovebag: Not more than a 60 by 60 inch impervious plastic bag-like enclosure affixed around an asbestos-containing material, with glove-like appendages through which material and tools may be handled.

aa. High-Efficiency Particulate Air (HEPA) Filter: A filter capable of trapping and retaining at least 99.97 percent of all mono-dispersed particles of 0.3 micrometers in diameter.

bb. Homogeneous Area: An area of surfacing material or thermal system insulation that is uniform in color and texture.

cc. Industrial Hygienist: A professional qualified by education, training, and experience to anticipate, recognize, evaluate, and develop controls for occupational health hazards.

dd. Intact: ACM which has not crumbled, been pulverized, or otherwise deteriorated so that the asbestos is no longer likely to be bound with its matrix. Removal of "intact" asphaltic, resinous, cementitious products does not render the ACM non-intact simply by being separated into smaller pieces.

ee. Model Accreditation Plan (MAP): USEPA training accreditation requirements for persons who work with asbestos as specified in 40 CFR 763, Subpart E, Appendix C.

ff. Modification: A changed or altered procedure, material or component of a control system, which replaces a procedure, material or component of a required system.

gg. Negative Exposure Assessment: A demonstration by the Contractor to show that employee exposure during an operation is expected to be consistently below the OSHA Permissible Exposure Limits (PELs).

hh. NESHAP: National Emission Standards for Hazardous Air Pollutants. The USEPA NESHAP regulation for asbestos is at 40 CFR

61, Subpart M.

ii. Nonfriable ACM: A NESHAP term defined in 40 CFR 61, Subpart M and EPA 340/1-90/018 meaning any material containing more than 1 percent asbestos, as determined using the method specified in 40 CFR 763, Subpart E, Appendix A, Section 1, Polarized Light Microscopy, that, when dry, cannot be crumbled, pulverized or reduced to powder by hand pressure.

jj. Nonfriable ACM (Category I): A NESHAP term defined in 40 CFR 61, Subpart E and EPA 340/1-90/018 meaning asbestos-containing packings, gaskets, resilient floor covering, and asphalt roofing products containing more than 1 percent asbestos as determined using the method specified in 40 CFR 763, Subpart F, Appendix A, Section 1, Polarized Light Microscopy.

kk. Nonfriable ACM (Category II): A NESHAP term defined in 40 CFR 61, Subpart E and EPA 340/1-90/018 meaning any material, excluding Category I nonfriable ACM, containing more than 1 percent asbestos, as determined using the methods specified in 40 CFR 763, Subpart F, Appendix A, Section 1, Polarized Light Microscopy, that when dry, cannot be crumbled, pulverized, or reduced to powder by hand pressure.

ll. Permissible Exposure Limits (PELs):

(1) PEL-Time weighted average(TWA): Concentration of asbestos not in excess of 0.1 fibers per cubic centimeter of air (f/cc) as an 8 hour time weighted average (TWA), as determined by the method prescribed in 29 CFR 1926, Section .1101, Appendix A, or the current version of NIOSH 84-100 analytical method 7400.

(2) PEL-Excursion Limit: An airborne concentration of asbestos not in excess of 1.0 f/cc of air as averaged over a sampling period of 30 minutes as determined by the method prescribed in 29 CFR 1926, Section .1101, Appendix A, or the current version of NIOSH 84-100 analytical method 7400.

mm. Regulated Area: An OSHA term defined in 29 CFR 1926, Section .1101 meaning an area established by the Contractor to demarcate areas where Class I, II, and III asbestos work is conducted; also any adjoining area where debris and waste from such asbestos work accumulate; and an area within which airborne concentrations of asbestos exceed, or there is a reasonable possibility they may exceed, the permissible exposure limit.

nn. Removal: All operations where ACM is taken out or stripped from structures or substrates, and includes demolition operations.

oo. Repair: Overhauling, rebuilding, reconstructing, or reconditioning of structures or substrates, including encapsulation or other repair of ACM attached to structures or substrates. If the amount of asbestos so "disturbed" cannot be contained in 1 standard glovebag or waste bag, Class I precautions are required.

pp. Spills/Emergency Cleanups: Cleanup of sizable amounts of asbestos waste and debris which has occurred, for example, when water damage occurs in a building, and sizable amounts of ACM are

dislodged. A Competent Person evaluates the site and ACM to be handled, and based on the type, condition and extent of the dislodged material, classifies the cleanup as Class I, II, or III. Only if the material was intact and the cleanup involves mere contact of ACM, rather than disturbance, could there be a Class IV classification.

qq. Surfacing ACM: Asbestos-containing material which contains more than 1% asbestos and is sprayed-on, troweled-on, or otherwise applied to surfaces, such as acoustical plaster on ceilings and fireproofing materials on structural members, or other materials on surfaces for acoustical, fireproofing, or other purposes.

rr. Thermal system insulation (TSI) ACM: ACM which contains more than 1% asbestos and is applied to pipes, fittings, boilers, breeching, tanks, ducts, or other interior structural components to prevent heat loss or gain or water condensation.

ss. Transite: A generic name for asbestos cement wallboard and pipe.

tt. Worker: Individual (not designated as the Competent Person or a supervisor) who performs asbestos work and has completed asbestos worker training required by 29 CFR 1926, Section .1101, to include EPA Model Accreditation Plan (MAP) "Worker" training; accreditation required by 40 CFR 763, Subpart E, Appendix C, if required by the OSHA Class of work to be performed or by the state where the work is to be performed.

1.3 DESCRIPTION OF WORK

The work covered by this section includes the removal of asbestos-containing materials (ACM) which are encountered during demolition activities associated with this project and describes procedures and equipment required to protect workers and occupants of the regulated area from contact with airborne asbestos fibers and ACM dust and debris. Activities include OSHA Class I and Class II work operations involving ACM.

Building 711: According to the Asbestos Survey Reinspection Report (August 2001), each floor of this two story building is covered with approximately 16,000 square feet of suspect asbestos containing building material -- 12" x 12" floor tile and mastic as well as linoleum. The absence of ACM must be demonstrated prior to demolition.

Building 715: According to the Asbestos Survey Reinspection Report (February 2000), each floor of this two story building is covered with approximately 9,000 square feet of asbestos containing building material -- 9" x 9" floor tile and mastic as well as pipe fitting insulation (124 fittings), pipe insulation (approximately 430 linear feet), transite siding (approximately 8,700 square feet), gypsum board and joint compound. The absence of ACM must be demonstrated prior to demolition.

The work also includes containment, storage, transportation and disposal of the generated ACM wastes. More specific operational procedures shall be detailed in the required Accident Prevention Plan and its subcomponents, the Asbestos Hazard Abatement Plan and Activity Hazard Analyses required in paragraph SAFETY AND HEALTH PROGRAM AND PLANS.

1.3.1 Abatement Work Tasks

The specific ACM to be abated is identified on the detailed plans and project drawings as well as in the preceding paragraph.

1.3.2 Unexpected Discovery of Asbestos

For any previously untested building components suspected to contain asbestos and located in areas impacted by the work, the Contractor shall notify the Contracting Officer (CO) who will have the option of ordering up to 6 bulk samples to be obtained at the Contractor's expense and delivered to a laboratory accredited under the National Institute of Standards and Technology (NIST) "National Voluntary Laboratory Accreditation Program (NVLAP)" and analyzed by PLM at no additional cost to the Government. Any additional components identified as ACM that have been approved by the Contracting Officer for removal shall be removed by the Contractor and will be paid for by an equitable adjustment to the contract price under the CONTRACT CLAUSE titled "changes". Sampling activities undertaken to determine the presence of additional ACM shall be conducted by personnel who have successfully completed the EPA Model Accreditation Plan (MAP) "Building Inspector" training course required by 40 CFR 763, Subpart E, Appendix C.

1.4 SUBMITTALS

Government approval is required for submittals with a "G" designation; submittals not having a "G" designation are for information only. When used, a designation following the "G" designation identifies the office that will review the submittal for the Government. The following shall be submitted in accordance with Section 01330 SUBMITTAL PROCEDURES:

SD-03 Product Data

Respiratory Protection Program; G-AO

Records of the respirator program.

Cleanup and Disposal; G-AO

Waste shipment records. Weigh bills and delivery tickets shall be furnished for information only.

Detailed Drawings; G-AO

Descriptions, detail project drawings, and site layout to include worksite containment area techniques as prescribed on applicable SET-UP DETAIL SHEETS, local exhaust ventilation system locations, decontamination units and load-out units, other temporary waste storage facility, access tunnels, location of temporary utilities (electrical, water, sewer) and boundaries of each regulated area.

Qualifications; G-AO

A written report providing evidence of qualifications for personnel, facilities and equipment assigned to the work. All personnel must be certified in accordance with Minnesota Rule 4620.3200 through 3350.

Training Program; G-AO

A copy of the written project site-specific training material as indicated in 29 CFR 1926, Section .1101 that will be used to train onsite employees. The training document shall be signed by the Contractor's Designated IH and Competent Person.

Medical Requirements; G-AO

Physician's written opinion.

SD-06 Test Reports

Exposure Assessment and Air Monitoring; G-AO]

Initial exposure assessments, negative exposure assessments, air-monitoring results and documentation.

Local Exhaust Ventilation; G-AO

Pressure differential recordings.

Licenses, Permits and Notifications; G-AO

Licenses, permits, and notifications.

1.5 QUALIFICATIONS

1.5.1 Written Qualifications and Organization Report

The Contractor shall furnish a written qualifications and organization report providing evidence of qualifications of the Contractor, Contractor's Project Supervisor, Designated Competent Person, supervisors and workers; Designated IH (person assigned to project and firm name); independent testing laboratory (including name of firm, principal, and analysts who will perform analyses); all subcontractors to be used including disposal transportation and disposal facility firms, subcontractor supervisors, subcontractor workers; and any others assigned to perform asbestos abatement and support activities. The report shall include an organization chart showing the Contractor's staff organization for this project by name and title, chain of command and reporting relationship with all subcontractors. The report shall be signed by the Contractor, the Contractor's onsite project manager, Designated Competent Person, Designated IH, designated testing laboratory and the principals of all subcontractors to be used. The Contractor shall include the following statement in the report: "By signing this report I certify that the personnel I am responsible for during the course of this project fully understand the contents of 29 CFR 1926, Section .1101, 40 CFR 61, Subpart M, and the federal, state and local requirements specified in paragraph SAFETY AND HEALTH PROGRAM AND PLANS for those asbestos abatement activities that they will be involved in."

1.5.2 Specific Requirements

The Contractor shall designate in writing, personnel meeting the following qualifications:

a. Designated Competent Person: The name, address, telephone number of the Contractor's Designated Competent Person shall be provided. Evidence that the full-time Designated Competent Person is

qualified in accordance with 29 CFR 1926, Sections .32 and .1101, has EPA Model Accreditation Plan (MAP) "Contractor/Supervisor" training accreditation required by 40 CFR 763, Subpart E, Appendix C, and is experienced in the administration and supervision of asbestos abatement projects, including exposure assessment and monitoring, work practices, abatement methods, protective measures for personnel, setting up and inspecting asbestos abatement work areas, evaluating the integrity of containment barriers, placement and operation of local exhaust systems, ACM generated waste containment and disposal procedures, decontamination units installation and maintenance requirements, site safety and health requirements, notification of other employees onsite, etc. The duties of the Competent Person shall include the following: controlling entry to and exit from the regulated area; supervising any employee exposure monitoring required by 29 CFR 1926, Section .1101; ensuring that all employees working within a regulated area wear the appropriate personal protective equipment (PPE), are trained in the use of appropriate methods of exposure control, and use the hygiene facilities and decontamination procedures specified; and ensuring that engineering controls in use are in proper operating conditions and are functioning properly. The Designated Competent Person shall be responsible for compliance with applicable federal, state and local requirements, the Contractor's Accident Prevention Plan and Asbestos Hazard Abatement Plan. The Designated Competent Person shall provide, and the Contractor shall submit, the "Contractor/Supervisor" course completion certificate and the most recent certificate for required refresher training with the employee "Certificate of Worker Acknowledgment" required by this paragraph. The Contractor shall submit evidence that this person has a minimum of 2 years of on-the-job asbestos abatement experience relevant to OSHA competent person requirements. The Designated Competent Person shall be onsite at all times during the conduct of this project.

b. Project and Other Supervisors: The Contractor shall provide the name, address, telephone number of the Project Supervisor and other supervisors who have responsibility to implement the Accident Prevention Plan, including the Asbestos Hazard Abatement Plan and Activity Hazard Analyses, the authority to direct work performed under this contract and verify compliance, and have EPA Model Accreditation Plan (MAP) "Contractor/Supervisor" training accreditation required by 40 CFR 763, Subpart E, Appendix C. The Project Supervisor and other supervisors shall provide, and the Contractor shall submit, the "Contractor/Supervisor" course completion certificate and the most recent certificate for required refresher training with the employee "Certificate of Worker Acknowledgment" required by this paragraph. The Contractor shall submit evidence that the Project Supervisor has a minimum of 2 years of on-the-job asbestos abatement experience relevant to project supervisor responsibilities and the other supervisors have a minimum of 1 year on-the-job asbestos abatement experience commensurate with the responsibilities they will have on this project.

c. Designated Industrial Hygienist: The Contractor shall provide the name, address, telephone number and other information specified below for the Industrial Hygienist (IH) selected to prepare the Contractor's Asbestos Hazard Abatement Plan, prepare and perform training, direct air monitoring and assist the Contractor's

Competent Person in implementing and ensuring that safety and health requirements are complied with during the performance of all required work. The Designated IH shall be a person who is board certified in the practice of industrial hygiene as determined and documented by the American Board of Industrial Hygiene (ABIH), has EPA Model Accreditation Plan (MAP) "Contractor/Supervisor" training accreditation required by 40 CFR 763, Subpart E, Appendix C, and has a minimum of 2 years of comprehensive experience in planning and overseeing asbestos abatement activities. The Designated IH shall provide, and the Contractor shall submit, the "Contractor/Supervisor" course completion certificate and the most recent certificate for required refresher training with the employee "Certificate of Worker Acknowledgment" required by this paragraph. The Designated IH shall be completely independent from the Contractor according to federal, state, or local regulations; that is, shall not be a Contractor's employee or be an employee or principal of a firm in a business relationship with the Contractor negating such independent status. A copy of the Designated IH's current valid ABIH certification shall be included. The Designated IH shall visit the site at the beginning of the project and each phase and shall be available for emergencies.

d. Asbestos Abatement Workers: Asbestos abatement workers shall meet the requirements contained in 29 CFR 1926, Section .1101, 40 CFR 61, Subpart M, and other applicable federal, state and local requirements. Worker training documentation shall be provided as required on the "Certificate of Workers Acknowledgment" in this paragraph.

e. Worker Training and Certification of Worker Acknowledgment: Training documentation will be required for each employee who will perform OSHA Class I, Class IIasbestos abatement operations. Such documentation shall be submitted on a Contractor generated form titled "Certificate of Workers Acknowledgment", to be completed for each employee in the same format and containing the same information as the example certificate at the end of this section. Training course completion certificates (initial and most recent update refresher) required by the information checked on the form shall be attached.

f. Physician: The Contractor shall provide the name, medical qualifications, address, telephone number and resume of the physician who will or has performed the medical examinations and evaluations of the persons who will conduct the asbestos abatement work tasks. The physician shall be currently licensed by the state where the workers will be or have been examined, have expertise in pneumoconiosis and shall be responsible for the determination of medical surveillance protocols and for review of examination/test results performed in compliance with 29 CFR 1926, Section .1101 and paragraph MEDICAL REQUIREMENTS. The physician shall be familiar with the site's hazards and the scope of this project.

g. First Aid and CPR Trained Persons: The names of at least 2 persons who are currently trained in first aid and CPR by the American Red Cross or other approved agency shall be designated and shall be onsite at all times during site operations. They shall be trained in universal precautions and the use of PPE as

described in the Bloodborne Pathogens Standard of 29 CFR 1910, Section .1030 and shall be included in the Contractor's Bloodborne Pathogen Program. These persons may perform other duties but shall be immediately available to render first aid when needed. A copy of each designated person's current valid First Aid and CPR certificate shall be provided.

h. Independent Testing Laboratory: The Contractor shall provide the name, address and telephone number of the independent testing laboratory selected to perform the sample analyses and report the results. The testing laboratory shall be completely independent from the Contractor as recognized by federal, state or local regulations. Written verification of the following criteria, signed by the testing laboratory principal and the Contractor, shall be submitted:

(1) Phase contrast microscopy (PCM): The laboratory is fully equipped and proficient in conducting PCM of airborne samples using the methods specified by 29 CFR 1926, Section .1101, OSHA method ID-160, the most current version of NIOSH 84-100 Method 7400, and NIOSH 84-100 Method 7402, transmission electron microscopy (TEM); the laboratory is currently judged proficient (classified as acceptable) in counting airborne asbestos samples by PCM by successful participation in each of the last 4 rounds in the American Industrial Hygiene Association (AIHA) Proficiency Analytical Testing (PAT) Program; the names of the selected microscopists who will analyze airborne samples by PCM with verified documentation of their proficiency to conduct PCM analyses by being judged proficient in counting samples as current participating analysts in the AIHA PAT Program, and having successfully completed the Asbestos Sampling and Analysis course (NIOSH 582 or equivalent) with a copy of course completion certificate provided; when the PCM analysis is to be conducted onsite, documentation shall be provided certifying that the onsite analyst meets the same requirements.

(2) Polarized light microscopy (PLM): The laboratory is fully equipped and proficient in conducting PLM analyses of suspect ACM bulk samples in accordance with 40 CFR 763, Subpart E, Appendix E; the laboratory is currently accredited by NIST under the NVLAP for bulk asbestos analysis and will use analysts (names shall be provided) with demonstrated proficiency to conduct PLM to include its application to the identification and quantification of asbestos content.

(3) Transmission electron microscopy (TEM): The laboratory is fully equipped and proficient in conducting TEM analysis of airborne samples using the mandatory method specified by 40 CFR 763, Subpart E, Appendix E; the laboratory is currently accredited by NIST under the NVLAP for airborne sample analysis of asbestos by TEM; the laboratory will use analysts (names shall be provided) that are currently evaluated as competent with demonstrated proficiency under the NIST NVLAP for airborne sample analysis of asbestos by TEM.

(4) PCM/TEM: The laboratory is fully equipped and each analyst (name shall be provided) possesses demonstrated proficiency in conducting PCM and TEM analysis of airborne samples using NIOSH 84-100Method 7400 PCM and NIOSH 84-100 Method 7402 (TEM

confirmation of asbestos content of PCM results) from the same filter.

i. Disposal Facility, Transporter: The Contractor shall provide written evidence that the landfill to be used is approved for asbestos disposal by the USEPA and state and local regulatory agencies. Copies of signed agreements between the Contractor (including subcontractors and transporters) and the asbestos waste disposal facility to accept and dispose of all asbestos containing waste generated during the performance of this contract shall be provided. Qualifications shall be provided for each subcontractor or transporter to be used, indicating previous experience in transport and disposal of asbestos waste to include all required state and local waste hauler requirements for asbestos. The Contractor and transporters shall meet the DOT requirements of 49 CFR 171, 49 CFR 172, and 49 CFR 173 as well as registration requirements of 49 CFR 107 and other applicable state or local requirements. The disposal facility shall meet the requirements of 40 CFR 61, Sections .154 or .155, as required in 40 CFR 61, Section .150(b), and other applicable state or local requirements.

1.5.3 Federal, State or Local Citations on Previous Projects

The Contractor and all subcontractors shall submit a statement, signed by an officer of the company, containing a record of any citations issued by Federal, State or local regulatory agencies relating to asbestos activities (including projects, dates, and resolutions); a list of penalties incurred through non-compliance with asbestos project specifications, including liquidated damages, overruns in scheduled time limitations and resolutions; and situations in which an asbestos-related contract has been terminated (including projects, dates, and reasons for terminations). If there are none, a negative declaration signed by an officer of the company shall be provided.

1.6 REGULATORY REQUIREMENTS

In addition to detailed requirements of this specification, work performed under this contract shall comply with EM 385-1-1, applicable federal, state, and local laws, ordinances, criteria, rules and regulations regarding handling, storing, transporting, and disposing of asbestos waste materials. This includes, but is not limited to, OSHA standards, 29 CFR 1926, especially Section .1101, 40 CFR 61, Subpart M, 40 CFR 763 and applicaable rules and statutes of the State of Minnesota. Matters of interpretation of standards shall be submitted to the appropriate administrative agency for resolution before starting work. Where the requirements of this specification, applicable laws, criteria, ordinances, regulations, and referenced documents vary, the most stringent requirements shall apply.

1.7 SAFETY AND HEALTH PROGRAM AND PLANS

The Contractor shall develop and submit a written comprehensive site-specific Accident Prevention Plan at least 30 days prior to the preconstruction conference. The Accident Prevention Plan shall address requirements of EM 385-1-1, Appendix A, covering onsite work to be performed by the Contractor and subcontractors. The Accident Prevention Plan shall incorporate an Asbestos Hazard Abatement Plan, and Activity Hazard Analyses as separate appendices into 1 site specific Accident Prevention Plan document. Any portions of the Contractor's overall Safety

and Health Program that are referenced in the Accident Prevention Plan, e.g., respirator program, hazard communication program, confined space entry program, etc., shall be included as appendices to the Accident Prevention Plan. The plan shall be prepared, signed (and sealed, including certification number if required), and dated by the Contractor's Designated IH, Competent Person, and Project Supervisor.

1.7.1 Asbestos Hazard Abatement Plan Appendix

The Asbestos Hazard Abatement Plan appendix to the Accident Prevention Plan shall include, but not be limited to, the following:

a. The personal protective equipment to be used;

b. The location and description of regulated areas including clean and dirty areas,access tunnels, and decontamination unit (clean room, shower room, equipment room, storage areas such as load-out unit);

c. Initial exposure assessment in accordance with 29 CFR 1926, Section .1101;

d. Level of supervision;

e. Method of notification of other employers at the worksite;

f. Abatement method to include containment and control procedures;

g. Interface of trades involved in the construction;

h. Sequencing of asbestos related work;

i. Storage and disposal procedures and plan;

j. Type of wetting agent and asbestos encapsulant to be used;

k. Location of local exhaust equipment;

l. Air monitoring methods (personal, environmental and clearance);

m. Bulk sampling and analytical methods (if required);

n. A detailed description of the method to be employed in order to control the spread of ACM wastes and airborne fiber concentrations;

o. Fire and medical emergency response procedures;

p. The security procedures to be used for all regulated areas.

1.7.2 Activity Hazard Analyses Appendix

Activity Hazard Analyses, for each major phase of work, shall be submitted and updated during the project. The Activity Hazard Analyses format shall be in accordance with EM 385-1-1 (Figure 1-1). The analysis shall define the activities to be performed for a major phase of work, identify the sequence of work, the specific hazards anticipated, and the control measures to be implemented to eliminate or reduce each hazard to an acceptable level. Work shall not proceed on that phase until the Activity Hazard Analyses has been accepted and a preparatory meeting has been

conducted by the Contractor to discuss its contents with everyone engaged in the activities, including the onsite Government representatives. The Activity Hazard Analyses shall be continuously reviewed and, when appropriate, modified to address changing site conditions or operations.

1.8 PRECONSTRUCTION CONFERENCE AND ONSITE SAFETY

The Contractor and the Contractor's Designated Competent Person, Project Supervisor, and Designated IH shall meet with the Contracting Officer prior to beginning work at a safety preconstruction conference to discuss the details of the Contractor's submitted Accident Prevention Plan to include the Asbestos Hazard Abatement Plan and Activity Hazard Analyses appendices. Deficiencies in the Accident Prevention Plan will be discussed and the Accident Prevention Plan shall be revised to correct the deficiencies and resubmitted for acceptance. Any changes required in the specification as a result of the Accident Prevention Plan shall be identified specifically in the plan to allow for free discussion and acceptance by the Contracting Officer, prior to the start of work. Onsite work shall not begin until the Accident Prevention Plan has been accepted. A copy of the written Accident Prevention Plan shall be maintained onsite. Changes and modifications to the accepted Accident Prevention Plan shall be made with the knowledge and concurrence of the Designated IH, the Project Supervisor, Designated Competent Person, and the Contracting Officer. Should any unforeseen hazard become evident during the performance of the work, the Designated IH shall bring such hazard to the attention of the Project Supervisor, Designated Competent Person, and the Contracting Officer, both verbally and in writing, for resolution as soon as possible. In the interim, all necessary action shall be taken by the Contractor to restore and maintain safe working conditions in order to safeguard onsite personnel, visitors, the public, and the environment. Once accepted by the Contracting Officer, the Accident Prevention Plan, including the Asbestos Hazard Abatement Plan and Activity Hazard Analyses will be enforced as if an addition to the contract. Disregarding the provisions of this contract or the accepted Accident Prevention Plan will be cause for stopping of work, at the discretion of the Contracting Officer, until the matter has been rectified.

1.9 SECURITY

Sufficient security shall be provided for each regulated area to ensure that unauthorized personnel are not able to enter the site. A log book shall be kept documenting entry into and out of the regulated area. Entry into regulated areas shall only be by personnel authorized by the Contractor and the Contracting Officer. Personnel authorized to enter regulated areas shall be trained, be medically evaluated, and wear the required personal protective equipment for the specific regulated area to be entered.

1.10 MEDICAL REQUIREMENTS

Medical requirements shall conform to 29 CFR 1926, Section .1101.

1.10.1 Medical Examinations

Before being exposed to airborne asbestos fibers, workers shall be provided with a medical examination as required by 29 CFR 1926, Section .1101 and other pertinent state or local requirements. This requirement shall have been satisfied within the last 12 months. The same medical examination shall be given on an annual basis to employees engaged in an occupation involving asbestos and within 30 calendar days before or after the

termination of employment in such occupation. X-ray films of asbestos workers shall be identified to the consulting radiologist and medical record jackets shall be marked with the word "asbestos."

1.10.1.1 Information Provided to the Physician

The Contractor shall provide the following information in writing to the examining physician:

a. A copy of 29 CFR 1926, Section .1101 and Appendices D, E, G, and I;

b. A description of the affected employee's duties as they relate to the employee's exposure;

c. The employee's representative exposure level or anticipated exposure level;

d. A description of any personal protective and respiratory equipment used or to be used;

e. Information from previous medical examinations of the affected employee that is not otherwise available to the examining physician.

1.10.1.2 Written Medical Opinion

For each worker, a written medical opinion prepared and signed by a licensed physician indicating the following:

a. Summary of the results of the examination.

b. The potential for an existing physiological condition that would place the employee at an increased risk of health impairment from exposure to asbestos.

c. The ability of the individual to wear personal protective equipment, including respirators, while performing strenuous work tasks under cold and/or heat stress conditions.

d. A statement that the employee has been informed of the results of the examination, provided with a copy of the results, informed of the increased risk of lung cancer attributable to the combined effect of smoking and asbestos exposure, and informed of any medical condition that may result from asbestos exposure.

1.10.2 Medical and Exposure Records

Complete and accurate records shall be maintained of each employee's medical examinations, medical records, and exposure data, as required by 29 CFR 1910, Section .1910.20 and 29 CFR 1926, Section .1101 for a period of 50 years after termination of employment. Records of the required medical examinations and exposure data shall be made available, for inspection and copying, to the Assistant Secretary of Labor for Occupational Safety and Health (OSHA) or authorized representatives of the employee and an employee's physician upon request of the employee or former employee. A copy of the required medical certification for each employee shall be maintained on file at the worksite for review, as requested by the Contracting Officer or the representatives.

1.11 TRAINING PROGRAM

1.11.1 General Training Requirements

The Contractor shall establish a training program as specified by EPA Model Accreditation Plan (MAP), training requirements at 40 CFR 763, Subpart E, Appendix C, the State of Minnesota Rules and Statutes, OSHA requirements at 29 CFR 1926, Section .1101(k)(9), and this specification. Contractor employees shall complete the required training for the type of work they are to perform and such training shall be documented and provided to the Contracting Officer as specified in paragraph QUALIFICATIONS.

1.11.2 Project Specific Training

Prior to commencement of work, each worker shall be instructed by the Contractor's Designated IH and Competent Person in the following project specific training:

a. The hazards and health effects of the specific types of ACM to be abated;

b. The content and requirements of the Contractor's Accident Prevention Plan to include the Asbestos Hazard Abatement Plan and Activity Hazard Analyses and site-specific safety and health precautions;

c. Hazard Communication Program;

d. Hands-on training for each asbestos abatement technique to be employed;

e. Heat and/or cold stress monitoring specific to this project;

f. Air monitoring program and procedures;

g. Medical surveillance to include medical and exposure record-keeping procedures;

h. The association of cigarette smoke and asbestos-related disease;

i. Security procedures;

j. Specific work practice controls and engineering controls required for each Class of work in accordance with 29 CFR 1926, Section .1101.

1.12 RESPIRATORY PROTECTION PROGRAM

The Contractor's Designated IH shall establish in writing, and implement a respiratory protection program in accordance with 29 CFR 1926, Section .1101, 29 CFR 1910, Section .134, ANSI Z88.2, CGA G-7, CGA G-7.1 and DETAIL SHEET 12. The Contractor's Designated IH shall establish minimum respiratory protection requirements based on measured or anticipated levels of airborne asbestos fiber concentrations encountered during the performance of the asbestos abatement work. The Contractor's respiratory protection program shall include, but not be limited to, the following elements:

a. The company policy, used for the assignment of individual responsibility, accountability, and implementation of the respiratory protection program.

b. The standard operating procedures covering the selection and use of respirators. Respiratory selection shall be determined by the hazard to which the worker is exposed.

c. Medical evaluation of each user to verify that the worker may be assigned to an activity where respiratory protection is required.

d. Training in the proper use and limitations of respirators.

e. Respirator fit-testing, i.e., quantitative, qualitative and individual functional fit checks.

f. Regular cleaning and disinfection of respirators.

g. Routine inspection of respirators during cleaning and after each use when designated for emergency use.

h. Storage of respirators in convenient, clean, and sanitary locations.

i. Surveillance of regulated area conditions and degree of employee exposure (e.g., through air monitoring).

j. Regular evaluation of the continued effectiveness of the respiratory protection program.

k. Recognition and procedures for the resolution of special problems as they affect respirator use (e.g., no facial hair that comes between the respirator face piece and face or interferes with valve function; prescription eye wear usage; contact lenses usage; etc.).

l. Proper training in putting on and removing respirators.

1.12.1 Respiratory Fit Testing

A qualitative or quantitative fit test conforming to 29 CFR 1926, Section 1101, Appendix C shall be conducted by the Contractor's Designated IH for each Contractor worker required to wear a respirator, and for the Contracting Officer and authorized visitors who enter a regulated area where respirators are required to be worn. A respirator fit test shall be performed for each worker wearing a negative-pressure respirator prior to initially wearing a respirator on this project and every 6 months thereafter. The qualitative fit tests may be used only for testing the fit of half-mask respirators where they are permitted to be worn, or of full-facepiece air purifying respirators where they are worn at levels at which half-facepiece air purifying respirators are permitted. If physical changes develop that will affect the fit, a new fit test for the worker shall be performed. Functional fit checks shall be performed by employees each time a respirator is put on and in accordance with the manufacturer's recommendation.

1.12.2 Respirator Selection and Use Requirements

The Contractor shall provide respirators, and ensure that they are used as required by 29 CFR 1926, Section .1101 and in accordance with the manufacturer's recommendations. Respirators shall be jointly approved by the Mine Safety and Health Administration and the National Institute for

Occupational Safety and Health (MSHA/NIOSH), or by NIOSH, under the provisions of 42 CFR 84, for use in environments containing airborne asbestos fibers. Personnel who handle ACM, enter regulated areas that require the wearing of a respirator, or who are otherwise carrying out abatement activities that require the wearing of a respirator, shall be provided with approved respirators that are fully protective of the worker at the measured or anticipated airborne asbestos concentration level to be encountered. For air-purifying respirators, the particulate filter portion of the cartridges or canister approved for use in airborne asbestos environments shall be high-efficiency particulate air (HEPA). The initial respirator selection and the decisions regarding the upgrading or downgrading of respirator type shall be made by the Contractor's Designated IH based on the measured or anticipated airborne asbestos fiber concentrations to be encountered. Recommendations made by the Contractor's Designated IH to downgrade respirator type shall be submitted in writing to the Contracting Officer. The Contractor's Designated Competent Person in consultation with the Designated IH, shall have the authority to take immediate action to upgrade or downgrade respiratory type when there is an immediate danger to the health and safety of the wearer. Respirators shall be used in the following circumstances:

a. During all Class I asbestos jobs.

b. During all Class II work where the ACM is not removed in a substantially intact state.

c. During all Class II and III work which is not performed using wet methods. Respirators need not be worn during removal of ACM from sloped roofs when a negative exposure assessment has been made and ACM is removed in an intact state.

d. During all Class II and III asbestos jobs where the Contractor does not produce a negative exposure assessment.

e. During all Class III jobs where TSI or surfacing ACM is being disturbed.

f. During all Class IV work performed within regulated areas where employees performing other work are required to wear respirators.

g. During all work where employees are exposed above the PEL-TWA or PEL-Excursion Limit.

h. In emergencies

1.12.3 Class I Work

The Contractor shall provide: (1) a tight-fitting, powered air purifying respirator equipped with high efficiency filters, or (2) a full-facepiece supplied air respirator operated in the pressure demand mode, equipped with HEPA egress cartridges, or (3) an auxiliary positive pressure self-contained breathing apparatus, for all employees within the regulated area where Class I work is being performed; provided that a negative exposure assessment has not been produced, and that the exposure level will not exceed 1 f/cc as an 8-hour time weighted average. A full-facepiece supplied air respirator, operated in the pressure demand mode, equipped with an auxiliary positive pressure self-contained breathing apparatus shall be provided under such conditions, if the exposure assessment indicates exposure levels above 1 f/cc as an 8-hour time weighted average.

1.12.4 Class II and III Work

The Contractor shall provide an air purifying respirator, other than a disposable respirator, equipped with high-efficiency filters whenever the employee performs Class II and III asbestos jobs where the Contractor does not produce a negative exposure assessment ; and Class III jobs where TSI or surfacing ACM is being disturbed.

1.12.5 Sanitation

Employees who wear respirators shall be permitted to leave work areas to wash their faces and respirator facepieces whenever necessary to prevent skin irritation associated with respirator use.

1.13 HAZARD COMMUNICATION PROGRAM

A hazard communication program shall be established and implemented in accordance with 29 CFR 1926, Section .59. Material safety data sheets (MSDSs) shall be provided for all hazardous materials brought onto the worksite. One copy shall be provided to the Contracting Officer and 1 copy shall be included in the Contractor's Hazard Communication Program.

1.14 LICENSES, PERMITS AND NOTIFICATIONS

1.14.1 General Legal Requirements

Necessary licenses, permits and notifications shall be obtained in conjunction with the project's asbestos abatement, transportation and disposal actions and timely notification furnished of such actions as required by federal, state, regional, and local authorities. The Contractor shall notify the Regional Office of the USEPA, the state's environmental protection agency responsible for asbestos air emissions, the local air pollution control district/agency and the Contracting Officer in writing, at least 10 days prior to the commencement of work, in accordance with 40 CFR 61, Subpart M, and state and local requirements to include the mandatory "Notification of Demolition and Renovation Record" form and other required notification documents. Notification shall be by Certified Mail, Return Receipt Requested. The Contractor shall furnish copies of the receipts to the Contracting Officer, in writing, prior to the commencement of work. A copy of the rental company's written acknowledgment and agreement shall be provided as required by paragraph RENTAL EQUIPMENT. For licenses, permits, and notifications that the Contractor is responsible for obtaining, the Contractor shall pay any associated fees or other costs incurred.

1.14.2 Litigation and Notification

The Contractor shall notify the Contracting Officer if any of the following occur:

a. The Contractor or any of the subcontractors are served with notice of violation of any law, regulation, permit or license which relates to this contract;

b. Proceedings are commenced which could lead to revocation of related permits or licenses; permits, licenses or other Government authorizations relating to this contract are revoked;

c. Litigation is commenced which would affect this contract;

d. The Contractor or any of the subcontractors become aware that their equipment or facilities are not in compliance or may fail to comply in the future with applicable laws or regulations.

1.15 PERSONAL PROTECTIVE EQUIPMENT

Three complete sets of personal protective equipment shall be made available to the Contracting Officer and authorized visitors for entry to the regulated area. Contracting Officer and authorized visitors shall be provided with training equivalent to that provided to Contractor employees in the selection, fitting, and use of the required personal protective equipment and the site safety and health requirements. Contractor workers shall be provided with personal protective clothing and equipment and the Contractor shall ensure that it is worn properly. The Contractor's Designated IH and Designated Competent Person shall select and approve all the required personal protective clothing and equipment to be used.

1.15.1 Respirators

Respirators shall be in accordance with paragraph RESPIRATORY PROTECTION PROGRAM.

1.15.2 Whole Body Protection

Personnel exposed to airborne concentrations of asbestos that exceed the PELs, or for all OSHA Classes of work for which a required negative exposure assessment is not produced, shall be provided with whole body protection and such protection shall be worn properly. The Contractor's Designated IH and Competent Person shall select and approve the whole body protection to be used. The Competent Person shall examine work suits worn by employees at least once per work shift for rips or tears that may occur during performance of work. When rips or tears are detected while an employee is working, rips and tears shall be immediately mended, or the work suit shall be immediately replaced. Disposable whole body protection shall be disposed of as asbestos contaminated waste upon exiting from the regulated area. Reusable whole body protection worn shall be either disposed of as asbestos contaminated waste upon exiting from the regulated area or be properly laundered in accordance with 29 CFR 1926, Section .1101. Whole body protection used for asbestos abatement shall not be removed from the worksite by a worker to be cleaned. Recommendations made by the Contractor's Designated IH to downgrade whole body protection shall be submitted in writing to the Contracting Officer. The Contractor's Designated Competent Person, in consultation with the Designated IH, has the authority to take immediate action to upgrade or downgrade whole body protection when there is an immediate danger to the health and safety of the wearer.

1.15.2.1 Coveralls

Disposable-breathable coveralls with a zipper front shall be provided. Sleeves shall be secured at the wrists, and foot coverings secured at the ankles. See DETAIL SHEET 13.

1.15.2.2 NOT USED

1.15.2.3 NOT USED

1.15.2.4 Gloves

Gloves shall be provided to protect the hands. Where there is the potential for hand injuries (i.e., scrapes, punctures, cuts, etc.) a suitable glove shall be provided and used.

1.15.2.5 Foot Coverings

Cloth socks shall be provided and worn next to the skin. Footwear, as required by OSHA and EM 385-1-1, that is appropriate for safety and health hazards in the area shall be worn. Rubber boots shall be used in moist or wet areas. Reusable footwear removed from the regulated area shall be thoroughly decontaminated or disposed of as ACM waste. Disposable protective foot covering shall be disposed of as ACM waste. If rubber boots are not used, disposable foot covering shall be provided.

1.15.2.6 Head Covering

Hood type disposable head covering shall be provided. In addition, protective head gear (hard hats) shall be provided as required. Hard hats shall only be removed from the regulated area after being thoroughly decontaminated.

1.15.2.7 Protective Eye Wear

Eye protection provided shall be in accordance with ANSI Z87.1.

1.16 HYGIENE FACILITIES AND PRACTICES

The Contractor shall establish a decontamination area for the decontamination of employees, material and equipment. The Contractor shall ensure that employees enter and exit the regulated area through the decontamination area.

1.16.1 Shower Facilities

Shower facilities, when provided, shall comply with 29 CFR 1910, Section .141(d)(3).

1.16.2 3-Stage Decontamination Area

A temporary negative pressure decontamination unit that is adjacent and attached in a leak-tight manner to the regulated area shall be provided as described in SET-UP DETAIL SHEET Numbers 22 and 23. The decontamination unit described in SET-UP DETAIL SHEET 22 shall be modified to consist of a clean room, an air lock chamber, a shower, an air lock shcmber and a dirty room (Minnesota Rule 4620.4569). Equipment and surfaces of containers filled with ACM shall be cleaned prior to removing them from the equipment room or area. Surfaces of the equipment room shall be wet wiped 2 times after each shift. Materials used for wet wiping shall be disposed of as asbestos contaminated waste. Two separate lockers shall be provided for each asbestos worker, one in the equipment room and one in the clean room. Hot water service may be secured from the building hot water system provided backflow protection is installed by the Contractor at the point of connection. The Contractor shall provide a minimum of 2 showers. Instantaneous type in-line water heater may be incorporated at each shower head in lieu of hot water heater, upon approval by the Contracting Officer. Flow and temperature controls shall be located within the shower and shall be adjustable by the user. The wastewater pump shall be sized for 1.25 times the showerhead flow-rate at a pressure head sufficient to satisfy the

filter head loss and discharge line losses. The pump shall supply a minimum 25 gpm flow with 35 ft. of pressure head. Used shower water shall be collected and filtered to remove asbestos contamination. Filters and residue shall be disposed of as asbestos contaminated material, per DETAIL SHEETS 9 and 14. Filtered water shall be discharged to the sanitary system or collected in barrels for later disposal. Wastewater filters shall be installed in series with the first stage pore size of 20 microns and the second stage pore size of 5 microns. The floor of the decontamination unit's clean room shall be kept dry and clean at all times. Water from the shower shall not be allowed to wet the floor in the clean room. Surfaces of the clean room and shower shall be wet-wiped 2 times after each shift change with a disinfectant solution. Proper housekeeping and hygiene requirements shall be maintained. Soap and towels shall be provided for showering, washing and drying. Any cloth towels provided shall be disposed of as ACM waste or shall be laundered in accordance with 29 CFR 1926, Section .1101.

1.16.3 Load-Out Unit

A temporary load-out unit that is adjacent and connected to the regulated area and shall be provided as described in DETAIL SHEET Number 20 and 25. Utilization of prefabricated units shall have prior approval of the Contracting Officer. The load-out unit shall be attached in a leak-tight manner to each regulated area. Surfaces of the load-out unit and access tunnel shall be adequately wet-wiped 2 times after each shift change. Materials used for wet wiping shall be disposed of as asbestos contaminated waste.

1.16.4 Single Stage Decontamination Area

A decontamination area (equipment room/area) shall be provided for Class I work involving less than 25 feet or 10 square feet of TSI or surfacing ACM, and for Class II asbestos work operations where exposures exceed the PELs or where there is no negative exposure assessment produced before the operation. The equipment room or area shall be adjacent to the regulated area for the decontamination of employees, material, and their equipment which is contaminated with asbestos. The equipment room or area shall consist of an area covered by an impermeable drop cloth on the floor or horizontal working surface. The area must be of sufficient size to accommodate cleaning of equipment and removing personal protective equipment without spreading contamination beyond the area. Surfaces of the equipment room shall be wet wiped 2 times after each shift. Materials used for wet wiping shall be disposed of as asbestos contaminated waste.

1.16.5 NOT USED

1.16.6 Decontamination Area Entry Procedures

The Contractor shall ensure that employees entering the decontamination area through the clean room or clean area:

a. Remove street clothing in the clean room or clean area and deposit it in lockers.

b. Put on protective clothing and respiratory protection before leaving the clean room or clean area.

c. Pass through the equipment room to enter the regulated area.

1.16.7 Decontamination Area Exit Procedures

The Contractor shall ensure that the following procedures are followed:

a. Before leaving the regulated area, respirators shall be worn while employees remove all gross contamination and debris from their work clothing using a HEPA vacuum.

b. Employees shall remove their protective clothing in the equipment room and deposit the clothing in labeled impermeable bags or containers (see Detail Sheets 9 and 14) for disposal and/or laundering.

c. Employees shall not remove their respirators in the equipment room.

d. Employees shall shower prior to entering the clean room. If a shower has not been located between the equipment room and the clean room or the work is performed outdoors, the Contractor shall ensure that employees engaged in Class I asbestos jobs: a) Remove asbestos contamination from their work suits in the equipment room or decontamination area using a HEPA vacuum before proceeding to a shower that is not adjacent to the work area; or b) Remove their contaminated work suits in the equipment room, without cleaning worksuits, and proceed to a shower that is not adjacent to the work area.

e. After showering, employees shall enter the clean room before changing into street clothes.

1.16.8 Lunch Areas

The Contractor shall provide lunch areas in which the airborne concentrations of asbestos are below 0.01 f/cc.

1.16.9 Smoking

Smoking, if allowed by the Contractor, shall only be permitted in designated areas approved by the Contracting Officer.

1.17 REGULATED AREAS

All Class I, II asbestos work shall be conducted within regulated areas. The regulated area shall be demarcated to minimize the number of persons within the area and to protect persons outside the area from exposure to airborne asbestos. Where critical barriers or negative pressure enclosures are used, they shall demarcate the regulated area. Access to regulated areas shall be limited to authorized persons. The Contractor shall control access to regulated areas, ensure that only authorized personnel enter, and verify that Contractor required medical surveillance, training and respiratory protection program requirements are met prior to allowing entrance.

1.18 WARNING SIGNS AND TAPE

Warning signs and tape printed in English shall be provided at the regulated boundaries and entrances to regulated areas. The Contractor shall ensure that all personnel working in areas contiguous to regulated areas comprehend the warning signs. Signs shall be located to allow personnel to read the signs and take the necessary protective steps

required before entering the area. Warning signs, as shown and described in DETAIL SHEET 11, shall be in vertical format conforming to 29 CFR 1910 and 29 CFR 1926, Section .1101, a minimum of 20 by 14 inches, and displaying the following legend in the lower panel:

DANGER
ASBESTOS
CANCER AND LUNG DISEASE HAZARD
AUTHORIZED PERSONNEL ONLY
RESPIRATORS AND PROTECTIVE CLOTHING ARE REQUIRED IN THIS AREA

Spacing between lines shall be at least equal to the height of the upper of any two lines. Warning tape shall be provided as shown and described on DETAIL SHEET 11. Decontamination unit signage shall be as shown and described on DETAIL SHEET 15.

1.19 WARNING LABELS

Warning labels shall be affixed to all asbestos disposal containers used to contain asbestos materials, scrap, waste debris, and other products contaminated with asbestos. Containers with preprinted warning labels conforming to requirements are acceptable. Warning labels shall be as described in DETAIL SHEET 14, shall conform to 29 CFR 1926, Section .1101 and shall be of sufficient size to be clearly legible displaying the following legend:

DANGER
CONTAINS ASBESTOS FIBERS
AVOID CREATING DUST
CANCER AND LUNG DISEASE HAZARD

1.20 LOCAL EXHAUST VENTILATION

Local exhaust ventilation units shall conform to ANSI Z9.2 and 29 CFR 1926, Section .1101. Filters on local exhaust system equipment shall conform to ANSI Z9.2 and UL 586. Filter shall be UL labeled.

1.21 TOOLS

Vacuums shall be leak proof to the filter, equipped with HEPA filters, of sufficient capacity and necessary capture velocity at the nozzle or nozzle attachment to efficiently collect, transport and retain the ACM waste material. Power tools shall not be used to remove ACM unless the tool is equipped with effective, integral HEPA filtered exhaust ventilation capture and collection system, or has otherwise been approved for use by the Contracting Officer. Residual asbestos shall be removed from reusable tools prior to storage and reuse. Reusable tools shall be thoroughly decontaminated prior to being removed from regulated areas.

1.22 RENTAL EQUIPMENT

If rental equipment is to be used, written notification shall be provided to the rental agency, concerning the intended use of the equipment, the possibility of asbestos contamination of the equipment and the steps that will be taken to decontaminate such equipment. A written acceptance of the terms of the Contractor's notification shall be obtained from the rental agency.

1.23 AIR MONITORING EQUIPMENT

The Contractor's Designated IH shall approve air monitoring equipment to be used to collect samples. The equipment shall include, but shall not be limited to:

a. High-volume sampling pumps that can be calibrated and operated at a constant airflow up to 16 liters per minute when equipped with a sampling train of tubing and filter cassette.

b. Low-volume, battery powered, body-attachable, portable personal pumps that can be calibrated to a constant airflow up to approximately 3.5 liters per minute when equipped with a sampling train of tubing and filter cassette, and a self-contained rechargeable power pack capable of sustaining the calibrated flow rate for a minimum of 10 hours. The pumps shall also be equipped with an automatic flow control unit which shall maintain a constant flow, even as filter resistance increases due to accumulation of fiber and debris on the filter surface.

c. Single use standard 25 mm diameter cassette, open face, 0.8 micron pore size, mixed cellulose ester membrane filters and cassettes with 50 mm electrically conductive extension cowl, and shrink bands, to be used with low flow pumps in accordance with 29 CFR 1926, Section .1101 for personal air sampling.

d. Single use standard 25 mm diameter cassette, open face, 0.45 micron pore size, mixed cellulose ester membrane filters and cassettes with 50 mm electrically conductive cowl, and shrink bands, to be used with high flow pumps when conducting environmental area sampling using NIOSH 84-100 Methods 7400 and 7402, (and the transmission electric microscopy method specified at 40 CFR 763 if required).

e. Appropriate plastic tubing to connect the air sampling pump to the selected filter cassette.

f. A flow calibrator capable of calibration to within plus or minus 2 percent of reading over a temperature range of minus 4 to plus 140 degrees F and traceable to a NIST primary standard.

1.24 EXPENDABLE SUPPLIES

1.24.1 Glovebag

Glovebags shall be provided as described in 29 CFR 1926, Section .1101 and SET-UP DETAIL SHEET 10. The glovebag assembly shall be 6 mil thick plastic, prefabricated and seamless at the bottom with preprinted OSHA warning label.

1.24.2 Duct Tape

Industrial grade duct tape of appropriate widths suitable for bonding sheet plastic and disposal container shall be provided.

1.24.3 Disposal Containers

Leak-tight (defined as solids, liquids, or dust that cannot escape or spill out) disposal containers shall be provided for ACM wastes as required by 29 CFR 1926 Section .1101 and DETAIL SHEETS 9A, 9B, 9C and 14.

1.24.4 Disposal Bags

Leak-tight bags, 6 mil thick, shall be provided for placement of asbestos generated waste as described in DETAIL SHEET 9A.

1.24.5 NOT USED

1.24.6 Cardboard Boxes

Heavy-duty corrugated cardboard boxes, coated with plastic or wax to retard deterioration from moisture, shall be provided as described in DETAIL SHEET 9C, if required by state and local requirements. Boxes shall fit into selected ACM disposal bags. Filled boxes shall be sealed leak-tight with duct tape.

1.24.7 Sheet Plastic

Sheet plastic shall be polyethylene of 6 mil minimum thickness and shall be provided in the largest sheet size necessary to minimize seams ,as indicated on the project drawings. Film shall be clear.

1.24.7.1 NOT USED

1.24.7.2 Reinforced

Reinforced sheets shall be provided where high skin strength is required, such as where it constitutes the only barrier between the regulated area and the outdoor environment. The sheet stock shall consist of translucent, nylon-reinforced or woven-polyethylene thread laminated between 2 layers of polyethylene film. Film shall meet flame resistant standards of NFPA 701.

1.24.8 Amended Water

Amended water shall meet the requirements of ASTM D 1331.

1.24.9 Mastic Removing Solvent

Mastic removing solvent shall be nonflammable and shall not contain methylene chloride, glycol ether, or halogenated hydrocarbons. Solvents used onsite shall have a flash point greater than 140 degrees F.

1.24.10 Leak-tight Wrapping

Two layers of 6 mil minimum thick polyethylene sheet stock shall be used for the containment of removed asbestos-containing components or materials such as reactor vessels, large tanks, boilers, insulated pipe segments and other materials too large to be placed in disposal bags as described in DETAIL SHEET 9B. Upon placement of the ACM component or material, each layer shall be individually leak-tight sealed with duct tape.

1.24.11 Viewing Inspection Window

Where feasible, a minimum of 1 clear, 1/8 inch thick, acrylic sheet, 18 by 24 inches, shall be installed as a viewing inspection window at eye level on a wall in each containment enclosure. The windows shall be sealed leak-tight with industrial grade duct tape.

1.24.12 Wetting Agents

Removal encapsulant (a penetrating encapsulant) shall be provided when conducting removal abatement activities that require a longer removal time or are subject to rapid evaporation of amended water. The removal encapsulant shall be capable of wetting the ACM and retarding fiber release during disturbance of the ACM greater than or equal to that provided by amended water. Performance requirements for penetrating encapsulants are specified in paragraph ENCAPSULANTS.

1.24.13 Strippable Coating

Strippable coating in aerosol cans shall be used to adhere to surfaces and to be removed cleanly by stripping, at the completion of work. This work shall only be done in well ventilated areas.

1.25 MISCELLANEOUS ITEMS

A sufficient quantity of other items, such as, but not limited to: scrapers, brushes, brooms, staple guns, tarpaulins, shovels, rubber squeegees, dust pans, other tools, scaffolding, staging, enclosed chutes, wooden ladders, lumber necessary for the construction of containments, UL approved temporary electrical equipment, material and cords, ground fault circuit interrupters, water hoses of sufficient length, fire extinguishers, first aid kits, portable toilets, logbooks, log forms, markers with indelible ink, spray paint in bright color to mark areas, project boundary fencing, etc., shall be provided.

PART 2 PRODUCTS

2.1 NOT USED

2.2 NOT USED

2.3 RECYCLABLE MATERIALS

The Contractor shall comply with EPA requirements in accordance with Section 01670 RECYCLED / RECOVERED MATERIALS.

PART 3 EXECUTION

3.1 GENERAL REQUIREMENTS

Asbestos abatement work tasks shall be performed as shown on the detailed plans and drawings, as summarized in paragraph DESCRIPTION OF WORKand the Contractor's Accident Prevention Plan, Asbestos Hazard Abatement Plan, and the Activity Hazard Analyses. The Contractor shall use the engineering controls and work practices required in 29 CFR 1926, Section .1101(g) in all operations regardless of the levels of exposure. Personnel shall wear and utilize protective clothing and equipment as specified. The Contractor shall not permit eating, smoking, drinking, chewing or applying cosmetics in the regulated area. All hot work (burning, cutting, welding, etc.) shall be conducted under controlled conditions in conformance with 29 CFR 1926, Section .352, Fire Prevention. Personnel of other trades, not engaged in asbestos abatement activities, shall not be exposed at any time to airborne concentrations of asbestos unless all the administrative and personal protective provisions of the Contractor's Accident Prevention Plan are complied with. Power to the regulated area shall be locked-out and tagged in accordance with 29 CFR 1910, and temporary electrical service with ground fault circuit interrupters shall be provided as needed.

Temporary electrical service shall be disconnected when necessary for wet removal. The Contractor shall stop abatement work in the regulated area immediately when the airborne total fiber concentration: (1) equals or exceeds 0.01 f/cc, or the pre-abatement concentration, whichever is greater, outside the regulated area; or (2) equals or exceeds 1.0 f/cc inside the regulated area. The Contractor shall correct the condition to the satisfaction of the Contracting Officer, including visual inspection and air sampling. Work shall resume only upon notification by the Contracting Officer. Corrective actions shall be documented.

3.2 PROTECTION OF ADJACENT WORK OR AREAS TO REMAIN

Asbestos abatement shall be performed without damage to or contamination of adjacent work or area. Where such work or area is damaged or contaminated, as verified by the Contracting Officer using visual inspection or sample analysis, it shall be restored to its original condition or decontaminated by the Contractor at no expense to the Government, as deemed appropriate by the Contracting Officer. This includes inadvertent spill of dirt, dust or debris in which it is reasonable to conclude that asbestos may exist. When these spills occur, work shall stop in all effected areas immediately and the spill shall be cleaned. When satisfactory visual inspection and air sampling analysis results are obtained and have been evaluated by the Contractor's Designated IH and the Contracting Officer, work shall proceed.

3.3 OBJECTS

3.3.1 Removal of Mobile Objects

Mobile objects, furniture, and equipment will be removed from the area of work by the Government before asbestos abatement work begins.

3.3.2 NOT USED

3.3.3 NOT USED

3.4 BUILDING VENTILATION SYSTEM AND CRITICAL BARRIERS

Building ventilating systems supplying air into or returning air out of a regulated area shall be isolated by airtight seals to prevent the spread of contamination throughout the system. Air-tight critical barriers shall be installed on building ventilating openings located inside the regulated area that supply or return air from the building ventilation system or serve to exhaust air from the building. The critical barriers shall consist of at least two (2) layers of six-mil polyethylene plastic sheeting. Edges to wall, ceiling and floor surfaces shall be sealed with industrial grade duct tape. Critical barriers shall be installed as shown on drawings and appended SET-UP DETAIL SHEETS.

3.5 PRECLEANING

Surfaces shall be cleaned by HEPA vacuum and adequately wet wiped prior to establishment of containment.

3.6 METHODS OF COMPLIANCE

3.6.1 Mandated Practices

The Contractor shall employ proper handling procedures in accordance with 29 CFR 1926 and 40 CFR 61, Subpart M, and the specified requirements. The

specific abatement techniques and items identified shall be detailed in the Contractor's Asbestos Hazard Abatement Plan including, but not limited to, details of construction materials, equipment, and handling procedures. The Contractor shall use the following engineering controls and work practices in all operations, regardless of the levels of exposure:

a. Vacuum cleaners equipped with HEPA filters to collect debris and dust containing ACM.

b. Wet methods or wetting agents to control employee exposures during asbestos handling, mixing, removal, cutting, application, and cleanup; except where it can be demonstrated that the use of wet methods is unfeasible due to, for example, the creation of electrical hazards, equipment malfunction, and in roofing.

c. Prompt clean-up and disposalin leak-tight containers of wastes and debris contaminated with asbestos.

d. Inspection and repair of polyethylene in work and high traffic areas.

e. Cleaning of equipment and surfaces of containers filled with ACM prior to removing them from the equipment room or area.

3.6.2 Control Methods

The Contractor shall use the following control methods to comply with the PELs:

a. Local exhaust ventilation equipped with HEPA filter dust collection systems;

b. Enclosure or isolation of processes producing asbestos dust;

c. Ventilation of the regulated area to move contaminated air away from the breathing zone of employees and toward a filtration or collection device equipped with a HEPA filter;

d. Use of other work practices and engineering controls;

e. Where the feasible engineering and work practice controls described above are not sufficient to reduce employee exposure to or below the PELs, the Contractor shall use them to reduce employee exposure to the lowest levels attainable by these controls and shall supplement them by the use of respiratory protection that complies with paragraph, RESPIRATORY PROTECTION PROGRAM.

3.6.3 Unacceptable Practices

The following work practices and engineering controls shall not be used for work related to asbestos or for work which disturbs ACM, regardless of measured levels of asbestos exposure or the results of initial exposure assessments:

a. High-speed abrasive disc saws that are not equipped with point of cut ventilator or enclosures with HEPA filtered exhaust air.

b. Compressed air used to remove asbestos, or materials containing

asbestos, unless the compressed air is used in conjunction with an enclosed ventilation system designed to capture the dust cloud created by the compressed air.

c. Dry sweeping, shoveling, or other dry clean-up of dust and debris containing ACM.

d. Employee rotation as a means of reducing employee exposure to asbestos.

3.6.4 Class I Work Procedures

In addition to requirements of paragraphs Mandated Practices and Control Methods, the following engineering controls and work practices shall be used:

a. A Competent Person shall supervise the installation and operation of the control system.

b. For jobs involving the removal of more than 25 feet or 10 square feet of TSI or surfacing material, the Contractor shall place critical barriers over all openings to the regulated area.

c. HVAC systems shall be isolated in the regulated area by sealing with a double layer of plastic or air-tight rigid covers.

d. Impermeable dropcloths (6 mil or greater thickness) shall be placed on surfaces beneath all removal activity.

e. Objects within the regulated area shall be handled as specified in paragraph OBJECTS.

f. Where a negative exposure assessment has not been provided or where exposure monitoring shows the PEL was exceeded, the regulated area shall be ventilated to move contaminated air away from the employee's breathing zone toward a HEPA unit or collection device.

3.6.5 Specific Control Methods for Class I Work

In addition to requirements of paragraph Class I Work Procedures, Class I asbestos work shall be performed using the control methods identified in the subparagraphs below.

3.6.5.1 Negative Pressure Enclosure (NPE) System

The NPE system shall be as shown in SETUP DETAIL SHEET 3, 4, and 8. The system shall provide at least 4 air changes per hour inside the containment. The local exhaust unit equipment shall be operated 24 hours per day until the containment is removed, and shall be leak-proof to the filter and equipped with HEPA filters. Air movement shall be directed away from the employees and toward a HEPA filtration device. The NPE shall be smoke tested for leaks at the beginning of each shift. Local exhaust equipment shall be sufficient to maintain a minimum pressure differential of minus 0.02 inch of water column relative to adjacent, unsealed areas. Pressure differential shall be monitored continuously, 24 hours per day, with an automatic manometric recording instrument. Pressure differential recordings shall be provided daily on the same day collected. Readings shall be reviewed by the Contractor's Designated Competent Person and IH

prior to submittal. The Contracting Officer shall be notified immediately if the pressure differential falls below the prescribed minimum. The building ventilation system shall not be used as the local exhaust system for the regulated area. The local exhaust system shall terminate outdoors unless an alternate arrangement is allowed by the Contract Officer. All filters used shall be new at the beginning of the project and shall be periodically changed as necessary and disposed of as ACM waste. The HEPA-filter neagtive air machine must be equipted in accordance with Minnesota Rule 4620.3570.

3.6.5.2 Glovebag Systems

Glovebag systems shall be as shown in SETUP DETAIL SHEET 10. The glovebag system shall be used to remove ACM from straight runs of piping and elbows and other connections. Glovebags shall be used without modification and shall be smoke-tested for leaks and any leaks sealed prior to use. Glovebags shall be installed to completely cover the circumference of pipe or other structures where the work is to be done. Glovebags shall be used only once and shall not be moved. Glovebags shall not be used on surfaces that have temperatures exceeding 150 degrees F. Prior to disposal, glovebags shall be collapsed by removing air within them using a HEPA vacuum. Before beginning the operation, loose and friable material adjacent to the glovebag operation shall be wrapped and sealed in 2 layers of plastic or otherwise rendered intact. At least 2 persons shall perform Class I glovebag removal. Asbestos regulated work areas shall be established as specified and shown on detailed drawings and plans for glovebag abatement. Designated boundary limits for the asbestos work shall be established with rope or other continuous barriers and all other requirements for asbestos control areas shall be maintained, including area signage and boundary warning tape as specified in SET-UP DETAIL SHEET 11.

a. In addition to requirements for negative pressure glovebag systems above, the Contractor shall attach HEPA vacuum systems or other devices to the bag to prevent collapse during removal of ACM from straight runs of piping and elbows and other connections.

b. The negative pressure glove boxes used to remove ACM from pipe runs shall be fitted with gloved apertures and a bagging outlet and constructed with rigid sides from metal or other material which can withstand the weight of the ACM and water used during removal. A negative pressure shall be created in the system using a HEPA filtration system. The box shall be smoke tested for leaks prior to each use.

3.6.5.3 Mini-Enclosures

Single bulkhead containment, double bulkhead containment or Mini-containment (small walk-in enclosure) as shown in SETUP DETAIL SHEET 5, 6, and 7 to accommodate no more than 2 persons, may be used if the disturbance or removal can be completely contained by the enclosure with the following specifications and work practices. The mini-enclosure shall be inspected for leaks and smoke tested before each use. Air movement shall be directed away from the employee's breathing zone within the mini-enclosure.

3.6.5.4 Wrap and Cut Operation

Wrap and cut operations shall be as shown in SETUP DETAIL SHEET 9B and 10. Prior to cutting pipe, the asbestos-containing insulation shall be wrapped

with polyethylene and securely sealed with duct tape to prevent asbestos becoming airborne as a result of the cutting process. The following steps shall be taken: install glovebag, strip back sections to be cut 6 inches from point of cut, and cut pipe into manageable sections.

3.6.6 Class II Work

In addition to the requirements of paragraphs Mandated Practices and Control Methods, the following engineering controls and work practices shall be used:

a. A Competent Person shall supervise the work.

b. For indoor work, critical barriers shall be placed over all openings to the regulated area.

c. Impermeable dropcloths shall be placed on surfaces beneath all removal activity.

3.6.7 Specific Control Methods for Class II Work

In addition to requirements of paragraph Class II Work, Class II work shall be performed using the following methods:

3.6.7.1 Vinyl and Asphalt Flooring Materials

When removing vinyl and asphalt flooring materials which contain ACM, the Contractor shall use the following practices as shown in RESPONSE ACTION DETAIL SHEET 57, 58, 59, 60, and 64. Resilient sheeting shall be removed by adequately wet methods. Tiles shall be removed intact (if possible); wetting is not required when tiles are heated and removed intact. Flooring or its backing shall not be sanded. Scraping of residual adhesive and/or backing shall be performed using wet methods. Mechanical chipping is prohibited unless performed in a negative pressure enclosure. Dry sweeping is prohibited. The Contractor shall use vacuums equipped with HEPA filter, disposable dust bag, and metal floor tool (no brush) to clean floors.

3.6.7.2 NOT USED

3.6.7.3 Cementitious Siding and Shingles or Transite Panels

When removing cementitious asbestos-containing siding, shingles or transite panels the Contractor shall use the following practices shown in RESPONSE ACTION DETAIL SHEET 81. Intentionally cutting, abrading or breaking siding, shingles, or transite panels is prohibited. Each panel or shingle shall be sprayed with amended water prior to removal. Nails shall be cut with flat, sharp instruments. Unwrapped or unbagged panels or shingles shall be immediately lowered to the ground via covered dust-tight chute, crane or hoist, or placed in an impervious waste bag or wrapped in plastic sheeting and lowered to the ground no later than the end of the work shift.

3.6.7.4 NOT USED

3.6.7.5 Other Class II Jobs

The Contractor shall use the following work practices when performing Class II removal of gypsum board ACM and joint compound: The material shall be thoroughly wetted with amended water prior and during its removal. The material shall be removed in an intact state. Cutting, abrading or

breaking the material is prohibited. The ACM removed shall be immediately bagged or wrapped.

3.6.8 NOT USED

3.6.9 NOT USED

3.6.10 NOT USED

3.6.11 Cleaning After Asbestos Removal

After completion of all asbestos removal work, surfaces from which ACM has been removed shall be wet wiped or sponged clean, or cleaned by some equivalent method to remove all visible residue. Run-off water shall be collected and filtered through a dual filtration system. A first filter shall be provided to remove fibers 20 micrometers and larger, and a final filter provided that removes fibers 5 micrometers and larger. After the gross amounts of asbestos have been removed from every surface, remaining visible accumulations of asbestos on floors shall be collected using plastic shovels, rubber squeegees, rubber dustpans, and HEPA vacuum cleaners as appropriate to maintain the integrity of the regulated area. When TSI and surfacing material has been removed, workmen shall use HEPA vacuum cleaners to vacuum every surface. Surfaces or locations which could harbor accumulations or residual asbestos dust shall be checked after vacuuming to verify that no asbestos-containing material remains; and shall be re-vacuumed as necessary to remove the ACM.

3.6.12 Class I Asbestos Work Response Action Detail Sheets

The following Class I Asbestos Work Response Action Detail Sheet is specified for each individual work task to be performed:

a. Fireproofing or Thermal Surface Insulation: See Sheet 68

b. Pipe Insulation (Using a Glovebag): See Sheet 87

c. Horizontal Pipe Insulation (Using a Containment Area): See Sheet 88

d. Pipe Insulation (Using a Mini-Containment Area): See Sheet 89

e. Pipe and Fitting Insulation (using Glovebag): See Sheet 86

3.6.13 Class II Asbestos Work Response Action Detail Sheets

The following Class II Asbestos Work Response Action Detail Sheet is specified for each individual work task to be performed:

a. Vinyl or Vinyl Asbestos Tile Adhered to Concrete Floor System by Asbestos-Containing Adhesive: See Sheet 56

b. Vinyl or Vinyl Asbestos Tile Adhered to Wood Floor System by Asbestos Containing Adhesive: See Sheet 60

c. Vinyl Asbestos Tile Adhered to Concrete Floor System by Asbestos Containing Adhesive: See Sheet 57

d. Vinyl Asbestos Tile Adhered to Concrete Floor System by Asbestos Free Adhesive: See Sheet 58

e. Vinyl Asbestos Tile and Chemical Dissolution of Asbestos-Containing Adhesives on Concrete Floor System: See Sheet 59

f. Vinyl Asbestos Tile Adhered to Wood Floor System by Asbestos-Containing Adhesive: See Sheet 61

g. Vinyl Asbestos Tile Adhered to Wood Floor System by Asbestos Free Adhesive: See Sheet 62

h. Miscellaneous Asbestos-Containing Materials: See Sheet 45

i. Asbestos Cement Siding: See Sheet 81

3.6.14 NOT USED

3.6.15 NOT USED

3.6.16 NOT USED

3.6.17 NOT USED

3.6.18 NOT USED

3.6.19 NOT USED

3.6.20 NOT USED

3.6.21 Sealing Contaminated Items Designated for Disposal

Contaminated architectural, mechanical, and electrical appurtenances such as Venetian blinds, full height partitions, carpeting, duct work, pipes and fittings, radiators, light fixtures, conduit panels, and other contaminated items designated for removal shall be coated with an asbestos lockdown encapsulant at the demolition site before being removed from the asbestos control area. These items shall be vacuumed prior to application of the lockdown encapsulant. The asbestos lockdown encapsulant shall be tinted a contrasting color and shall be spray applied by airless method. Thoroughness of sealing operation shall be visually gauged by the extent of colored coating on exposed surfaces.

3.7 FINAL CLEANING AND VISUAL INSPECTION

Upon completion of abatement, the regulated area shall be cleaned by collecting, packing, and storing all gross contamination; see SET-UP DETAIL SHEETS 9, 14 and 20. A final cleaning shall be performed using HEPA vacuum and wet cleaning of all exposed surfaces and objects in the regulated area. Upon completion of the cleaning, the Contractor shall conduct a visual pre-inspection of the cleaned area in preparation for a final inspection before final air clearance monitoring and recleaning, as necessary. Upon completion of the final cleaning, the Contractor and the Contracting Officer shall conduct a final visual inspection of the cleaned regulated area in accordance with ASTM E 1368 and document the results on the Final Cleaning and Visual Inspection as specified on the SET-UP DETAIL SHEET 19. If the Contracting Officer rejects the clean regulated area as not meeting final cleaning requirements, the Contractor shall reclean as necessary and have a follow-on inspection conducted with the Contracting Officer. Recleaning and follow-up reinspection shall be at the Contractor's expense.

3.8 NOT USED

3.9 EXPOSURE ASSESSMENT AND AIR MONITORING

3.9.1 General Requirements For Exposure

Exposure assessment, air monitoring and analysis of airborne concentration of asbestos fibers shall be performed in accordance with 29 CFR 1926, Section .1101, the Contractor's air monitoring plan, and as specified. Personal exposure air monitoring (collected at the breathing zone) that is representative of the exposure of each employee who is assigned to work within a regulated area shall be performed by the Contractor's Designated IH. Breathing zone samples shall be taken for at least 25 percent of the workers in each shift, or a minimum of 2, whichever is greater. Air monitoring results at the 95 percent confidence level shall be calculated as shown in Table 1 at the end of this section. The Contractor shall provide an onsite independent testing laboratory with qualified analysts and appropriate equipment to conduct sample analyses of air samples using the methods prescribed in 29 CFR 1926, Section .1101, to include NIOSH 84-100 Method 7400. Preabatement and abatement environmental air monitoring shall be performed by the Contractor's Designated IH. Final clearance environmental air monitoring, shall be performed by the Contractor's Designated IH. Environmental and final clearance air monitoring shall be performed using NIOSH 84-100 Method 7400 (PCM) with optional confirmation of results by either NIOSH 84-100 Method 7402 (TEM) or the EPA TEM Method specified in 40 CFR 763. For environmental and final clearance, air monitoring shall be conducted at a sufficient velocity and duration to establish the limit of detection of the method used at 0.005 f/cc. Confirmation of asbestos fiber concentrations (asbestos f/cc) from environmental and final clearance samples collected and analyzed by NIOSH 84-100 Method 7400 (total f/cc) may be conducted using TEM in accordance with NIOSH 84-100 Method 7402. When such confirmation is conducted, it shall be from the same sample filter used for the NIOSH 84-100 Method 7400 PCM analysis. For all Contractor required environmental or final clearance air monitoring, confirmation of asbestos fiber concentrations, using NIOSH 84-100 Method 7402, shall be at the Contractor's expense. Monitoring may be duplicated by the Government at the discretion of the Contracting Officer. Results of breathing zone samples shall be posted at the job site and made available to the Contracting Officer. The Contractor shall maintain a fiber concentration inside a regulated area less than or equal to 0.1 f/cc expressed as an 8 hour, time-weighted average (TWA) during the conduct of the asbestos abatement. If fiber concentration rises above 0.1 f/cc, work procedures shall be investigated with the Contracting Officer to determine the cause. At the discretion of the Contracting Officer, fiber concentration may exceed 0.1 f/cc but shall not exceed 1.0 f/cc expressed as an 8-hour TWA. The Contractor's workers shall not be exposed to an airborne fiber concentration in excess of 1.0 f/cc, as averaged over a sampling period of 30 minutes. Should either an environmental concentration of 1.0 f/cc expressed as an 8-hour TWA or a personal excursion concentration of 1.0 f/cc expressed as a 30-minute sample occur inside a regulated work area, the Contractor shall stop work immediately, notify the Contracting Officer, and implement additional engineering controls and work practice controls to reduce airborne fiber levels below prescribed limits in the work area. Work shall not restart until authorized by the Contracting Officer.

3.9.2 Initial Exposure Assessment

The Contractor's Designated IH shall conduct an exposure assessment immediately before or at the initiation of an asbestos abatement operation to ascertain expected exposures during that operation. The assessment shall be completed in time to comply with the requirements which are triggered by exposure data or the lack of a negative exposure assessment, and to provide information necessary to assure that all control systems planned are appropriate for that operation. The assessment shall take into consideration both the monitoring results and all observations, information or calculations which indicate employee exposure to asbestos, including any previous monitoring conducted in the workplace, or of the operations of the Contractor which indicate the levels of airborne asbestos likely to be encountered on the job. For Class I asbestos work, until the employer conducts exposure monitoring and documents that employees on that job will not be exposed in excess of PELs, or otherwise makes a negative exposure assessment, the Contractor shall presume that employees are exposed in excess of the PEL-TWA and PEL-Excursion Limit.

3.9.3 Negative Exposure Assessment

The Contractor shall provide a negative exposure assessment for the specific asbestos job which will be performed. The negative exposure assessment shall be provided within 3 days of the initiation of the project and conform to the following criteria:

a. Objective Data: Objective data demonstrating that the product or material containing asbestos minerals or the activity involving such product or material cannot release airborne fibers in concentrations exceeding the PEL-TWA and PEL-Excursion Limit under those work conditions having the greatest potential for releasing asbestos.

b. Prior Asbestos Jobs: Where the Contractor has monitored prior asbestos jobs for the PEL and the PEL-Excursion Limit within 12 months of the current job, the monitoring and analysis were performed in compliance with asbestos standard in effect; the data were obtained during work operations conducted under workplace conditions closely resembling the processes, type of material, control methods, work practices, and environmental conditions used and prevailing in the Contractor's current operations; the operations were conducted by employees whose training and experience are no more extensive than that of employees performing the current job; and these data show that under the conditions prevailing and which will prevail in the current workplace, there is a high degree of certainty that the monitoring covered exposure from employee exposures will not exceed the PEL-TWA and PEL-Excursion Limit.

c. Initial Exposure Monitoring: The results of initial exposure monitoring of the current job, made from breathing zone air samples that are representative of the 8-hour PEL-TWA and 30-minute short-term exposures of each employee. The monitoring covered exposure from operations which are most likely during the performance of the entire asbestos job to result in exposures over the PELs.

3.9.4 NOT USED

3.9.5 Preabatement Environmental Air Monitoring

Preabatement environmental air monitoring shall be established 1 day prior to the masking and sealing operations for each regulated area to determine background concentrations before abatement work begins. As a minimum, preabatement air samples shall be collected using NIOSH 84-100 Method 7400, PCM at these locations: outside the building; inside the building, but outside the regulated area perimeter; and inside each regulated work area. One sample shall be collected for every 2000 square feet of floor space. At least 2 samples shall be collected outside the building: at the exhaust of the HEPA unit; and downwind from the abatement site. The PCM samples shall be analyzed within 24 hours; and if any result in fiber concentration greater than 0.01 f/cc, asbestos fiber concentration shall be confirmed using NIOSH 84-100 Method 7402 (TEM).

3.9.6 Environmental Air Monitoring During Abatement

Until an exposure assessment is provided to the Contracting Officer, environmental air monitoring shall be conducted at locations and frequencies that will accurately characterize any evolving airborne asbestos fiber concentrations. The assessment shall demonstrate that the product or material containing asbestos minerals, or the abatement involving such product or material, cannot release airborne asbestos fibers in concentrations exceeding 0.01 f/cc as a TWA under those work conditions having the greatest potential for releasing asbestos. The monitoring shall be at least once per shift at locations including, but not limited to, close to the work inside a regulated area; preabatement sampling locations; outside entrances to a regulated area; close to glovebag operations; representative locations outside of the perimeter of a regulated area; inside clean room; and at the exhaust discharge point of local exhaust system ducted to the outside of a containment (if used). If the sampling outside regulated area shows airborne fiber levels have exceeded background or 0.01 f/cc, whichever is greater, work shall be stopped immediately, and the Contracting Officer notified. The condition causing the increase shall be corrected. Work shall not restart until authorized by the Contracting Officer.

3.9.7 Final Clearance Air Monitoring

Prior to conducting final clearance air monitoring, the Contractor and the Contracting Officer shall conduct a final visual inspection of the regulated area where asbestos abatement has been completed. The final visual inspection shall be as specified in SET-UP DETAIL SHEET 19. Final clearance air monitoring shall not begin until acceptance of the Contractor's final cleaning by the Contracting Officer. The Contractor's Designated IH shall conduct final clearance air monitoring using aggressive air sampling techniques as defined in EPA 560/5-85-024 or as otherwise required by federal or state requirements. The sampling and analytical method used will be either NIOSH 84-100Method 7400 (PCM) and Table 2 with confirmation of results by NIOSH 84-100 Method 7402 (TEM) or the EPA TEM Method specified at 40 CFR 763 and Table 3.

3.9.7.1 Final Clearance Requirements, NIOSH PCM Method

For PCM sampling and analysis using NIOSH 84-100 Method 7400, the fiber concentration inside the abated regulated area, for each airborne sample, shall be less than 0.01 f/cc. The abatement inside the regulated area is considered complete when every PCM final clearance sample is below the clearance limit. If any sample result is greater than 0.01 total f/cc, the asbestos fiber concentration (asbestos f/cc) shall be confirmed from that same filter using NIOSH 84-100 Method 7402 (TEM) at Contractor's expense.

If any confirmation sample result is greater than 0.01 asbestos f/cc, abatement is incomplete and cleaning shall be repeated. Upon completion of any required recleaning, resampling with results to meet the above clearance criteria shall be done.

3.9.7.2 Final Clearance Requirements, EPA TEM Method

For EPA TEM sampling and analysis, using the EPA Method specified in 40 CFR 763, abatement inside the regulated area is considered complete when the arithmetic mean asbestos concentration of the 5 inside samples is less than or equal to 70 structures per square millimeter (70 S/mm). When the arithmetic mean is greater than 70 S/mm, the 3 blank samples shall be analyzed. If the 3 blank samples are greater than 70 S/mm, resampling shall be done. If less than 70 S/mm, the 5 outside samples shall be analyzed and a Z-test analysis performed. When the Z-test results are less than 1.65, the decontamination shall be considered complete. If the Z-test results are more than 1.65, the abatement is incomplete and cleaning shall be repeated. Upon completion of any required recleaning, resampling with results to meet the above clearance criteria shall be done.

3.9.7.3 Air Clearance Failure

If clearance sampling results fail to meet the final clearance requirements, the Contractor shall pay all costs associated with the required recleaning, resampling, and analysis, until final clearance requirements are met.

3.9.8 Air-Monitoring Results and Documentation

Air sample fiber counting shall be completed and results provided within 24 hours (breathing zone samples), and 24 hours (environmental/clearance monitoring) after completion of a sampling period. The Contracting Officer shall be notified immediately of any airborne levels of asbestos fibers in excess of established requirements. Written sampling results shall be provided within 5 working days of the date of collection. The written results shall be signed by testing laboratory analyst, testing laboratory principal and the Contractor's Designated IH. The air sampling results shall be documented on a Contractor's daily air monitoring log. The daily air monitoring log shall contain the following information for each sample:

a. Sampling and analytical method used;

b. Date sample collected;

c. Sample number;

d. Sample type: BZ = Breathing Zone (Personal), P = Preabatement, E = Environmental, C = Abatement Clearance;

e. Location/activity/name where sample collected;

f. Sampling pump manufacturer, model and serial number, beginning flow rate, end flow rate, average flow rate (L/min);

g. Calibration date, time, method, location, name of calibrator, signature;

h. Sample period (start time, stop time, elapsed time (minutes);

i. Total air volume sampled (liters);

j. Sample results (f/cc and S/mm square) if EPA methods are required for final clearance;

k. Laboratory name, location, analytical method, analyst, confidence level. In addition, the printed name and a signature and date block for the Industrial Hygienist who conducted the sampling and for the Industrial Hygienist who reviewed the daily air monitoring log verifying the accuracy of the information.

3.10 CLEARANCE CERTIFICATION

When asbestos abatement is complete, ACM waste is removed from the regulated areas, and final clean-up is completed, the Contracting Officer will certify the areas as safe before allowing the warning signs and boundary warning tape to be removed. The Contractor and the Contracting Officer shall visually inspect all surfaces within the containment for residual material or accumulated debris. The Contractor shall reclean all areas showing dust or residual materials. The Contracting Officer will certify in writing that the area is safe before unrestricted entry is permitted. The Government will have the option to perform monitoring to certify the areas are safe before entry is permitted.

3.11 CLEANUP AND DISPOSAL

3.11.1 Title to ACM Materials

ACM material resulting from abatement work, except as specified otherwise, shall become the property of the Contractor and shall be disposed of as specified and in accordance with applicable federal, state and local regulations.

3.11.2 Collection and Disposal of Asbestos

All ACM waste shall be collected and including contaminated wastewater filters, scrap, debris, bags, containers, equipment, and asbestos contaminated clothing, shall be collected and placed in leak-tight containers such as double plastic bags (see DETAIL SHEET 9A); sealed double wrapped polyethylene sheet (see DETAIL 9B); sealed fiberboard boxes (see DETAIL SHEET 9C); or other approved containers. Waste within the containers shall be wetted in case the container is breeched. Asbestos-containing waste shall be disposed of at an EPA, state and local approved asbestos landfill. For temporary storage, sealed impermeable containers shall be stored in an asbestos waste load-out unit or in a storage/transportation conveyance (i.e., dumpster, roll-off waste boxes, etc.) in a manner acceptable to and in an area assigned by the Contracting Officer. Procedure for hauling and disposal shall comply with 40 CFR 61, Subpart M, state, regional, and local standards.

3.11.3 Scale Weight Measurement

Scales used for measurement shall be public scales. Weighing shall be at a point nearest the work at which a public scale is available. Scales shall be standard truck scales of the beam type; scales shall be equipped with the type registering beam and an "over and under" indicator; and shall be capable of accommodating the entire vehicle. Scales shall be tested, approved and sealed by an inspector of the State of Minnesota. Scales shall be calibrated and resealed as often as necessary and at least once

every three months to ensure continuous accuracy. Vehicles used for hauling ACM shall be weighed empty daily at such time as directed and each vehicle shall bear a plainly legible identification mark.

3.11.4 Weigh Bill and Delivery Tickets

Copies of weigh bills and delivery tickets shall be submitted to the Contracting Officer during the progress of the work. The Contractor shall furnish the Contracting Officer scale tickets for each load of ACM weighed and certified. These tickets shall include tare weight; identification mark for each vehicle weighed; and date, time and location of loading and unloading. Tickets shall be furnished at the point and time individual trucks arrive at the worksite. A master log of all vehicle loading shall be furnished for each day of loading operations. Before the final statement is allowed, the Contractor shall file with the Contracting Officer certified weigh bills and/or certified tickets and manifests of all ACM actually disposed by the Contractor for this contract.

3.11.5 Asbestos Waste Shipment Record

The Contractor shall complete and provide the Contracting Officer final completed copies of the Waste Shipment Record for all shipments of waste material as specified in 40 CFR 61, Subpart M and other required state waste manifest shipment records, within 3 days of delivery to the landfill. Each Waste Shipment Record shall be signed and dated by the Contractor, the waste transporter and disposal facility operator.

TABLE 1

FORMULA FOR CALCULATION OF THE 95 PERCENT CONFIDENCE LEVEL
(Reference: NIOSH 7400)

Fibers/cc(01.95 percent CL) = X + [(X) * (1.645) * (CV)]

Where: X = ((E)(AC))/((V)(1000))

E = ((F/Nf) - (B/Nb))/Af

CV = The precision value; 0.45 shall be used unless the analytical laboratory provides the Contracting Officer with documentation (Round Robin Program participation and results) that the laboratory's precision is better.

AC = Effective collection area of the filter in square millimeters

V = Air volume sampled in liters

E = Fiber density on the filter in fibers per square millimeter

F/Nf = Total fiber count per graticule field

B/Nb = Mean field blank count per graticule field

Af = Graticule field area in square millimeters

TWA = C1/T1 + C2/T2 = Cn/Tn

Where: C = Concentration of contaminant

T = Time sampled.

TABLE 2

NI0SH METHOD 7400

PCM ENVIRONMENTAL AIR SAMPLING PROTOCOL (NON-PERSONAL)

Sample Location	Minimum No. of Samples	Filter Pore Size (Note 1)	Min. Vol. (Note 2) (Liters)	Sampling Rate (liters/min.)
Inside Abatement Area	0.5/140 Square Meters (Notes 3 & 4)	0.45 microns	3850	2-16
Each Room in 1 Abatement Area Less than 140 Square meters		0.45 microns	3850	2-16
Field Blank	2	0.45 microns	0	0
Laboratory Blank	1	0.45 microns	0	0

Notes:

1. Type of filter is Mixed Cellulose Ester.

2. Ensure detection limit for PCM analysis is established at 0.005 fibers/cc.

3. One sample shall be added for each additional 140 square meters. (The corresponding I-P units are 5/1500 square feet).

4. A minimum of 5 samples are to be taken per abatement area, plus 2 field blanks.

TABLE 3

EPA AHERA METHOD: TEM AIR SAMPLING PROTOCOL

Location Sampled	Minimum No. of Samples	Filter Pore Size	Min. Vol. (Liters)	Sampling Rate (liters/min.)
Inside Abatement Area	5	0.45 microns	1500	2-16
Outside Abatement Area	5	0.45 microns	1500	2-16
Field Blank	2	0.45 microns	0	0
Laboratory Blank	1	0.45 microns	0	0

Notes:

1. Type of filter is Mixed Cellulose Ester.

2. The detection limit for TEM analysis is 70 structures/square mm.

CERTIFICATE OF WORKER'S ACKNOWLEDGMENT

PROJECT NAME _____ CONTRACT NO. _____
PROJECT ADDRESS _____
CONTRACTOR FIRM NAME _____
EMPLOYEE'S NAME _____,_____,_____,
(Print) (Last) (First) (MI)

Social Security Number: _____-_____-_____,

WORKING WITH ASBESTOS CAN BE DANGEROUS. INHALING ASBESTOS FIBERS HAS BEEN LINKED WITH TYPES OF LUNG DISEASE AND CANCER. IF YOU SMOKE AND INHALE ASBESTOS FIBERS, THE CHANCE THAT YOU WILL DEVELOP LUNG CANCER IS GREATER THAN THAT OF THE NONSMOKING PUBLIC.

Your employer's contract for the above project requires that you be provided and you complete formal asbestos training specific to the type of work you will perform and project specific training; that you be supplied with proper personal protective equipment including a respirator, that you be trained in its use; and that you receive a medical examination to evaluate your physical capacity to perform your assigned work tasks, under the environmental conditions expected, while wearing the required personal protective equipment. These things are to be done at no cost to you. By signing this certification, you are acknowledging that your employer has met these obligations to you. The Contractor's Designated Industrial Hygienist will check the block(s) for the type of formal training you have completed. Review the checked blocks prior to signing this certification.

FORMAL TRAINING:
_____ a. For Competent Persons and Supervisors: I have completed EPA's Model Accreditation Program (MAP) training course, "Contractor/Supervisor", that meets this State's requirements.

b. For Workers:
_____ (1) For OSHA Class I work: I have completed EPA's MAP training course, "Worker", that meets this State's requirements.
_____ (2) For OSHA Class II work (where there will be abatement of more than one type of Class II materials, i.e., roofing, siding, floor tile, etc.): I have completed EPA's MAP training course, "Worker", that meets this State's requirements.
(3) For OSHA Class II work (there will only be abatement of one type of Class II material):
_____ (a) I have completed an 8-hour training class on the elements of 29 CFR 1926, Section .1101(k)(9)(viii), in addition to the specific work practices and engineering controls of 29 CFR 1926, Section .1101(g) and hands-on training.
_____ (b) I have completed EPA's MAP training course, "Worker", that meets this State's requirements.
_____ (4) For OSHA Class III work: I have completed at least a 16-hour course consistent with EPA requirements for training of local education agency maintenance and custodial staff at 40 CFR 763, Section .92(a)(2) and the elements of 29 CFR 1926, Section .1101(k)(9)(viii), in addition to the specific work practices and engineering controls at 29 CFR 1926, Section .1101, and hands-on training.

CERTIFICATE OF WORKER'S ACKNOWLEDGMENT

_____ (5) For OSHA Class IV work: I have completed at least a 2-hr course consistent with EPA requirements for training of local education agency maintenance and custodial staff at 40 CFR 763, (a)(1), and the elements of 29 CFR 1926, Section .1101(k)(9)(viii), in addition to the specific work practices and engineering controls at 29 CFR 1926, Section .1101(g) and hands-on training.

_____ c. Workers, Supervisors and the Designated Competent Person: I have completed annual refresher training as required by EPA's MAP that meets this State's requirements.

PROJECT SPECIFIC TRAINING:
_____ I have been provided and have completed the project specific training required by this Contract. My employer's Designated Industrial Hygienist and Designated Competent Person conducted the training.

RESPIRATORY PROTECTION:
_____ I have been trained in accordance with the criteria in the Contractor's Respiratory Protection program. I have been trained in the dangers of handling and breathing asbestos dust and in the proper work procedures and use and limitations of the respirator(s) I will wear. I have been trained in and will abide by the facial hair and contact lens use policy of my employer.

RESPIRATOR FIT-TEST TRAINING:
_____ I have been trained in the proper selection, fit, use, care, cleaning,maintenance, and storage of the respirator(s) that I will wear. I have been fit-tested in accordance with the criteria in the Contractor's Respiratory Program and have received a satisfactory fit. I have been assigned my individual respirator. I have been taught how to properly perform positive and negative pressure fit-check upon donning negative pressure respirators each time.

MEDICAL EXAMINATION:
_____ I have had a medical examination within the last twelve months which was paid for by my employer. The examination included: health history, pulmonary function tests, and may have included an evaluation of a chest x-ray. A physician made a determination regarding my physical capacity to perform work tasks on the project while wearing personal protective equipment including a respirator. I was personally provided a copy and informed of the results of that examination. My employer's Industrial Hygienist evaluated the medical certification provided by the physician and checked the appropriate blank below. The physician determined that there:

_____ were no limitations to performing the required work tasks.
_____ were identified physical limitations to performing the required work tasks.

Date of the medical examination _____

Employee Signature _____ date _____
Contractor's Industrial
Hygienist Signature _____ date _____

-- End of Section --

Part 2, Setup Details

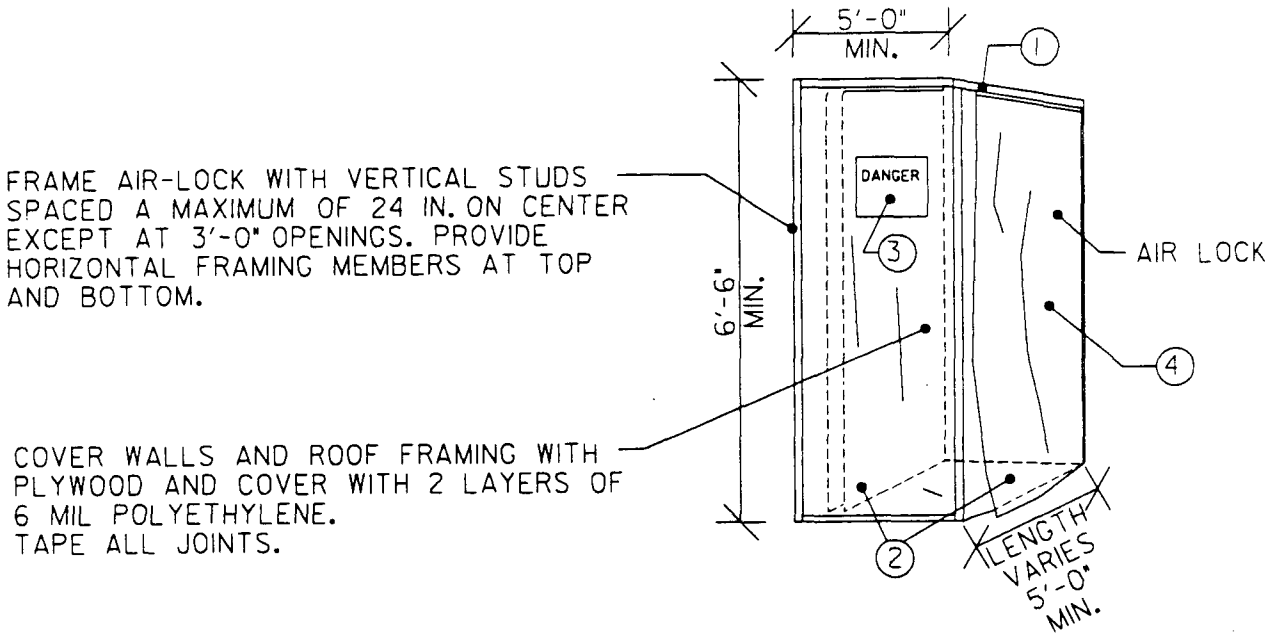

Air lock

1. Establish work area so that unauthorized entry is prevented; see sheet 11. Construct a wood frame. Install one layer of 6-mil polyethylene sheeting to structural members and two layers to the floor. Seal all edges of sheeting to wall, ceiling, and floor surfaces with duct tape.

2. Install triple flaps of 6-mil polyethylene sheeting at both doorways.

3. Install danger signs on each side of air lock area; see sheet 11.

4. Before leaving work area, remove outer suit. Place in a plastic bag; see sheet 9.

5. Enter air lock. Wet wipe respirator and wash hands with clean water from portable sprayer. Remove respirator, and place in a clean plastic bag. Proceed to shower, where inner suit may be removed.

Final clearance requirements. After abatement is completed, prepare area for final clearance. Contractor and Contracting Officer will certify visual inspection of work area on sheet 19, *Certification of Final Cleaning and Visual Inspection.* Contract designee(s) will conduct final air-clearance monitoring as required by the contract. Remove containment area upon instructions from the Contracting Officer, and treat as asbestos-contaminated material; see sheets 9 and 14.

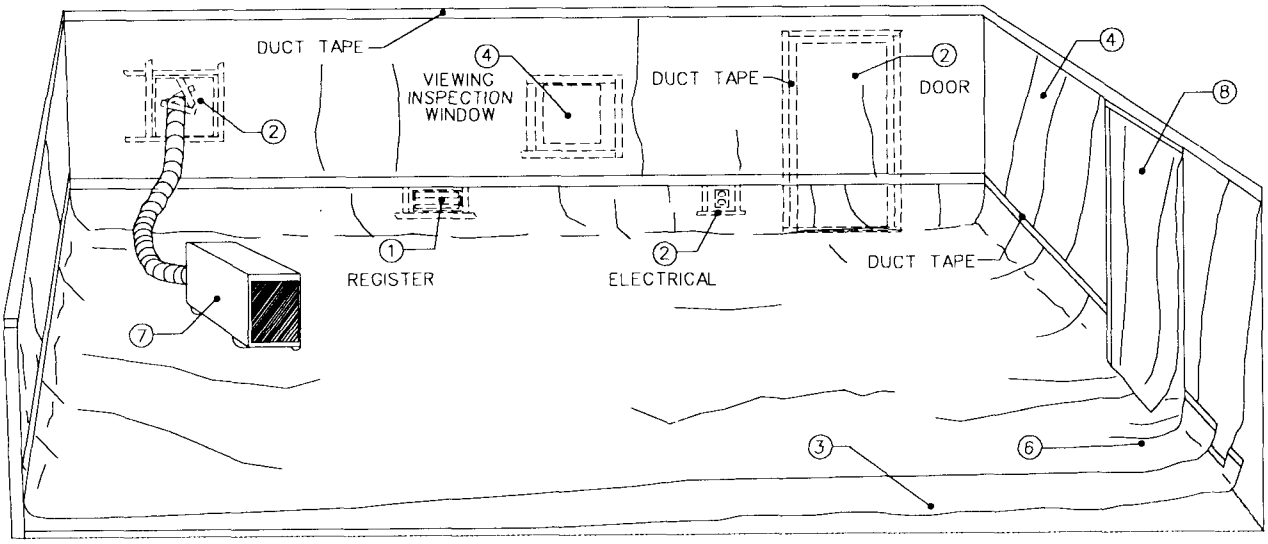

Installation of critical barrier and full containment area (for hard floor surfaces)

1. Establish work area so that unauthorized entry is prevented; see sheet 11. Eliminate airflow into containment area by isolation of all supply and return air ducts from mechanical system. Lock doors and windows not required for access.

2. Install 6-mil polyethylene critical barriers over all windows, doors, wall openings, electrical outlets, etc. Secure with duct tape on all sides. HEPA vacuum furniture, fixtures, and equipment and remove from or protect in containment area, as specified by the contract.

3. Install first layer of 6-mil polyethylene on floor, extending the polyethylene 18 inches up wall. Secure with duct tape.

4. Protect wall surface with 6-mil polyethylene from floor to ceiling. Install view inspection windows, where feasible.

5. Prepare area as follows: turn off electrical power and remove light fixtures. Protect ceiling as required. HEPA vacuum floor and walls.

6. Install top layer of 6-mil polyethylene.

7. Install HEPA filter unit and duct work; see sheet 8.

8. Prepare door into decontamination unit or load-out unit; see sheet 22 for decontamination unit and sheet 20 for load-out unit. Doors that swing into the work area must be removed from hinges.

Final clearance requirements. After abatement has been completed, see sheet 17 for final clearance requirements.

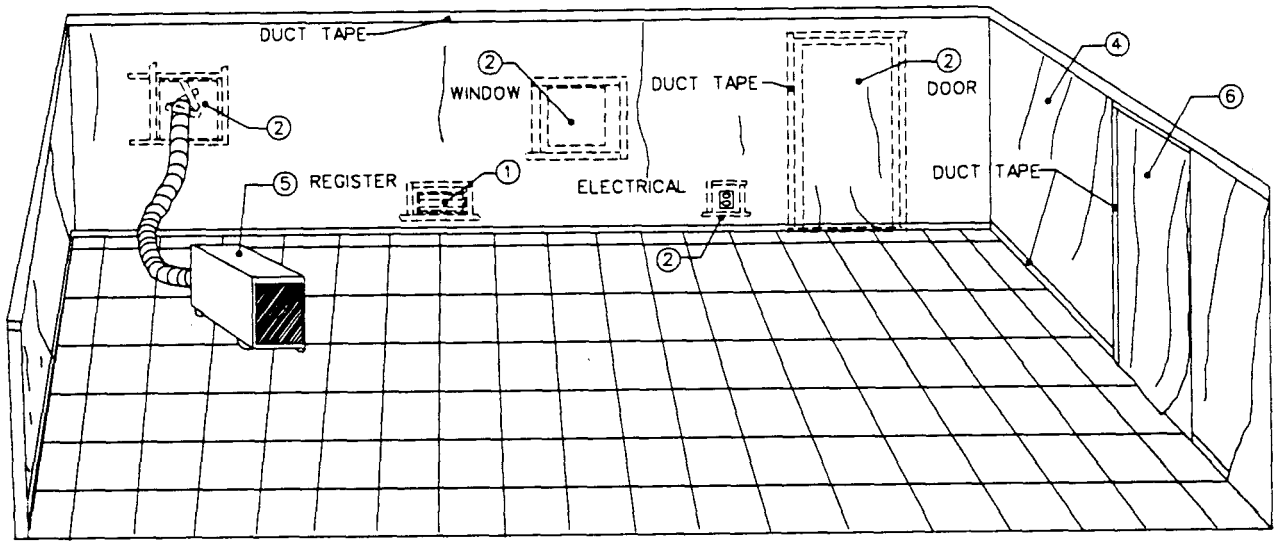

Installation of critical barrier and full containment area (for vinyl tile floors)

1. Establish work area so that unauthorized entry is prevented; see sheet 11. Eliminate airflow into containment area by isolating all supply and return air ducts from mechanical system. Lock doors and windows not required for access.

2. Install 6-mil polyethylene critical barriers over all windows, doors, wall openings, electrical outlets, etc. Secure with duct tape on all sides. HEPA vacuum furniture, fixtures, and equipment and remove from or protect in containment area, as specified by the contract.

3. Prepare area as follows: turn off electrical power and remove light fixtures. Protect ceiling as required. HEPA vacuum floors and walls.

4. Protect wall surface with 6-mil polyethylene from floor to ceiling. Install viewing inspection windows, where feasible.

5. Install HEPA filter unit and duct work; see sheet 8.

6. Prepare door into decontamination unit or load-out unit; see sheet 22 for decontamination unit and sheet 20 for load-out unit. Doors that swing into the work area must be removed from hinges.

Final clearance requirements. After abatement has been completed, see sheet 18 for final clearance requirements.

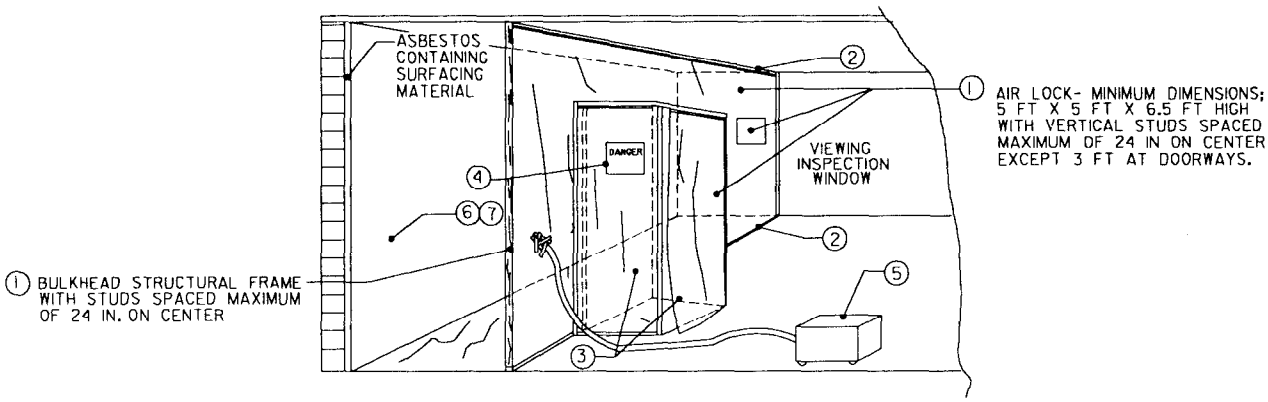

Single bulkhead containment area

1. Establish work area so that unauthorized entry is prevented; see sheet 11. Construct a structural frame for a bulkhead wall and an air lock. See sheet 1 for air lock requirements other than those identified in note 1 of this drawing. Bulkhead is to be parallel to the item requiring abatement. Attach structural frame to walls, floor, or ceiling as necessary for stability. Cover the frame with one layer and the floor with two layers of 6-mil polyethylene sheeting, sealing edges of polyethylene to walls, ceilings, and floor surfaces with duct tape. Install viewing inspection windows, where feasible.

2. Seal with duct tape all penetrations (typical) such as pipes, electrical conduit, or ducts.

3. Install triple 6-mil polyethylene flaps at both doorways. Place portable sprayer with clean water, disposable towels, and prelabeled disposal bag in air lock.

4. Install danger signs on outside of containment area; see sheet 11.

5. Install HEPA vacuum. Extend hose into mini-containment area for general vacuuming, negative air, and cleaning of disposable suit.

6. Accumulate all loose materials for disposal, and place in approved container; see Sheet 9. Apply labels; see sheet 14. Adequately wet clean all wall, floor, tool, and equipment surfaces.

7. Abatement worker must wear two disposable suits. Remove outer suit in work area and place in a plastic bag; see sheet 9. Enter air lock.

8. In air lock, wet wipe respirator and wash hands with clean water from portable sprayer. Remove respirator and place in clean plastic bag. Proceed to remote shower where inner suit may be removed.

Final clearance requirements. After abatement is completed, prepare area for final clearance. Contractor and Contracting Officer will certify visual inspection of work area on sheet 19, *Certification of Final Cleaning and Visual Inspection.* Contractor will apply lockdown encapsulant. Contract designee(s) will conduct final air-clearance monitoring as required by the contract. Remove containment area upon instructions from the Contracting Officer, and treat it as asbestos- contaminated material. Place in approved container; see sheet 9. Apply labels, see sheet 14. Dispose of as specified in the contract.

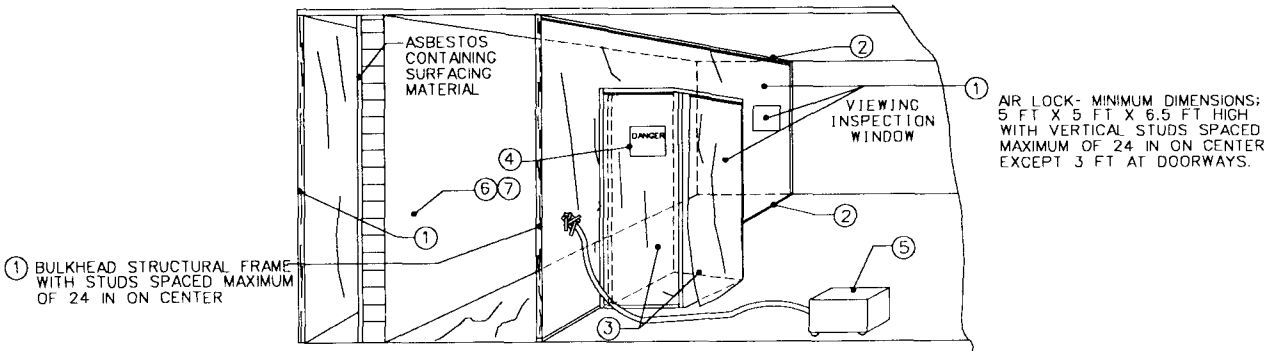

Double bulkhead containment area

1. Establish work area so that unauthorized entry is prevented; see sheet 11. Construct a structural frame for two bulkhead walls and an air lock. See sheet 1 for air lock requirements other than those identified in note 1 of this drawing. Bulkheads are to be parallel to the wall being removed. Attach structural frame to walls, floor, or ceiling as necessary for stability. Locate change room on the side opposite the asbestos-containing surface material. Cover the frame with one layer and the floor with two layers of 6-mil polyethylene sheeting and seal edges to walls, ceiling, and floor surfaces with duct tape. If a bulkhead is located outside the building, end walls and a roof will also be required. Install viewing inspection windows, where feasible.

2. Seal with duct tape all penetrations (typical) such as pipes, electrical conduit, or ducts.

3. Install triple 6-mil polyethylene flaps at doorways. Place portable sprayer with clean water, disposable towels, and prelabeled disposal bag in air lock.

4. Install danger signs on outside of containment area; see sheet 11.

5. Install HEPA vacuum; extend hose into mini-containment area for general vacuuming, negative air, and cleaning of disposable suit.

6. Accumulate all loose materials for disposal. Place in approved container; see sheet 9. Apply labels; see sheet 14. Adequately wet clean all wall, floor, tool, and equipment surfaces.

7. Abatement worker must wear two disposable suits. Remove outer suit in work area and place in a plastic bag; see sheet 9. Enter air lock.

8. In air lock, wet wipe respirator and wash hands with clean water from portable sprayer. Remove respirator and place in a clean plastic bag. Proceed to shower where inner suit may be removed.

9. After abatement is completed, prepare area for final clearance.

Final clearance requirements. After abatement is completed, prepare area for final clearance. Contractor and Contracting Officer will certify visual inspection of work area on sheet 19, *Certification of Final Cleaning and Visual Inspection*. Contractor will apply lockdown encapsulant. Contract designee(s) will conduct final air-clearance monitoring as required by the contract. Remove containment area upon instructions from the Contracting Officer, and treat it as asbestos- contaminated material. Place in approved container; see sheet 9. Apply labels; see sheet 14. Dispose of as specified in the contract.

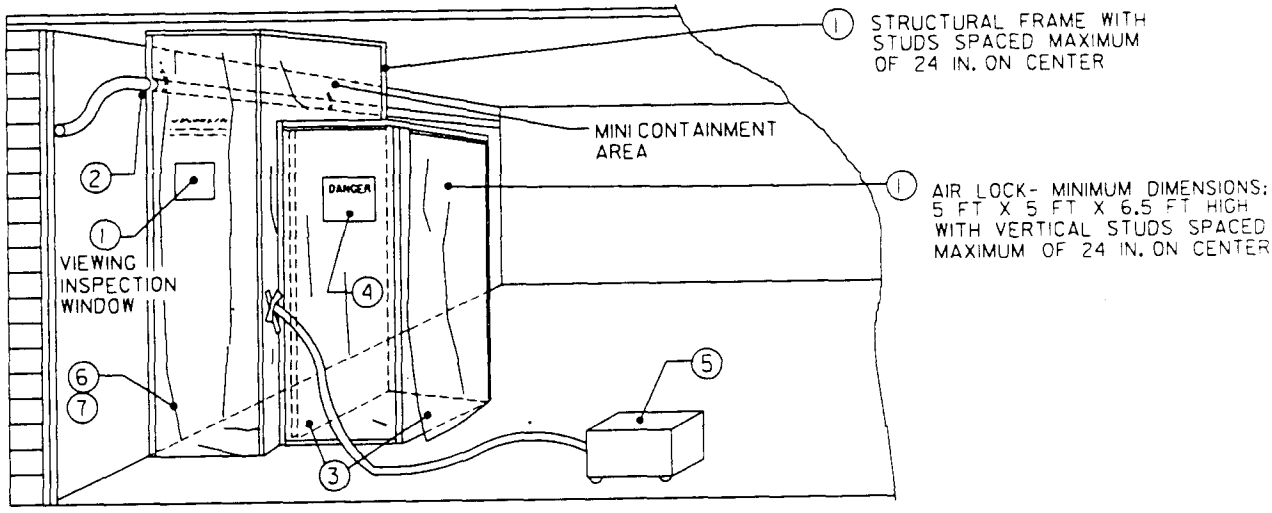

Mini-containment area

1. Establish work area so that unauthorized entry is prevented; see sheet 11. Construct a two-compartment wood frame around work area; install one layer 6-mil polyethylene sheeting to structural members and two layers 6-mil polyethylene sheeting to the floor. Seal all edges to wall, ceiling, and floor surfaces with duct tape. Install viewing inspection windows, where feasible.

2. Seal with duct tape all penetrations (typical) such as pipes, electrical conduit, or ducts.

3. Install triple 6-mil polyethylene flaps at both doorways. Place portable sprayer with clean water, disposable towels, and prelabeled disposal bag in air lock.

4. Install danger signs on outside of containment area. See sheet 11.

5. Install HEPA vacuum; extend hose into mini-containment area for general vacuuming, negative air, and cleaning of disposable suit.

6. Accumulate all loose materials for disposal. Place in approved container; see sheet 9. Apply labels; see sheet 14. Adequately wet clean all wall, floor, tool, and equipment surfaces.

7. Abatement worker must wear two disposable suits. Remove outer suit in work area and place in a plastic bag; see sheet 9. Enter air lock.

8. In air lock, wet wipe respirator and wash hands with clean water. Remove respirator and place in a clean plastic bag. Proceed to remote shower unit where inner suit may be removed.

Final clearance requirements. After abatement is completed, prepare area for final clearance. Contractor and Contracting Officer will certify visual inspection of work area on sheet 19, *Certification of Final Cleaning and Visual Inspection*. Contractor will apply lockdown encapsulant. Contract designee(s) will conduct final air-clearance monitoring as required by the contract. Remove containment area upon instructions from the Contracting Officer, and treat it as asbestos- contaminated material. Place in approved container; see sheet 9. Apply labels, see sheet 14. Dispose of as specified in the contract.

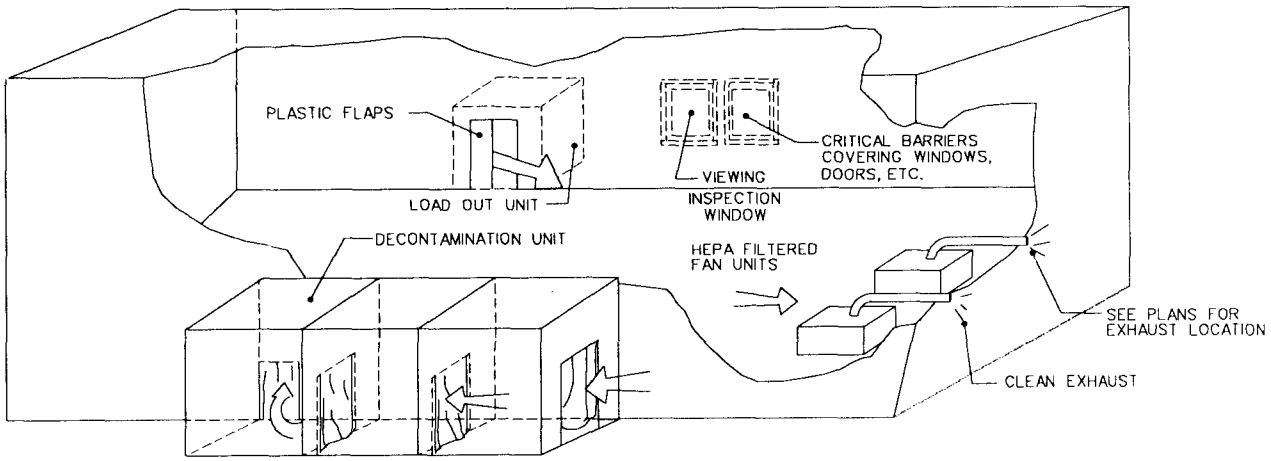

Ventilation of containment area and decontamination unit, using HEPA filters

1. Install a ventilation system in the containment area that draws the air supply through the decontamination and load-out units. See sheets 20 and 22.

2. Operate ventilation system 24 hours a day from start of abatement through final clearance.

3. Place at the decontamination unit entrance a pressure gauge that measures differential pressure between abatement and ambient areas. Gauge must be read hourly and logged or continuously recorded.

4. The ventilation system must create, as a minimum, a negative pressure of 0.02 inches of water inside the containment area (relative to the outside of the containment area) and must be sized for a minimum of four air changes per hour or more, as specified in the contractor's asbestos hazard abatement plan.

5. Locate HEPA filters in order to prevent dead air pockets.

6. Exhaust filtered air to outside of building, unless otherwise approved by the Contracting Officer.

Final clearance requirements. For final clearance, remove ventilation system upon instruction from the Contracting Officer and relocate to equipment room of decontamination unit. Thoroughly HEPA vacuum unit and ducting. Adequately wet clean all surfaces and wheels of unit(s). Collect all waste debris and unit filters, and treat as asbestos-contaminated material, placing in approved container; see sheet 9. Apply labels; see sheet 14. Dispose of waste as required by the contract. Wrap unit in one layer of 6-mil polyethylene sheeting, and seal with duct tape before removing from job location.

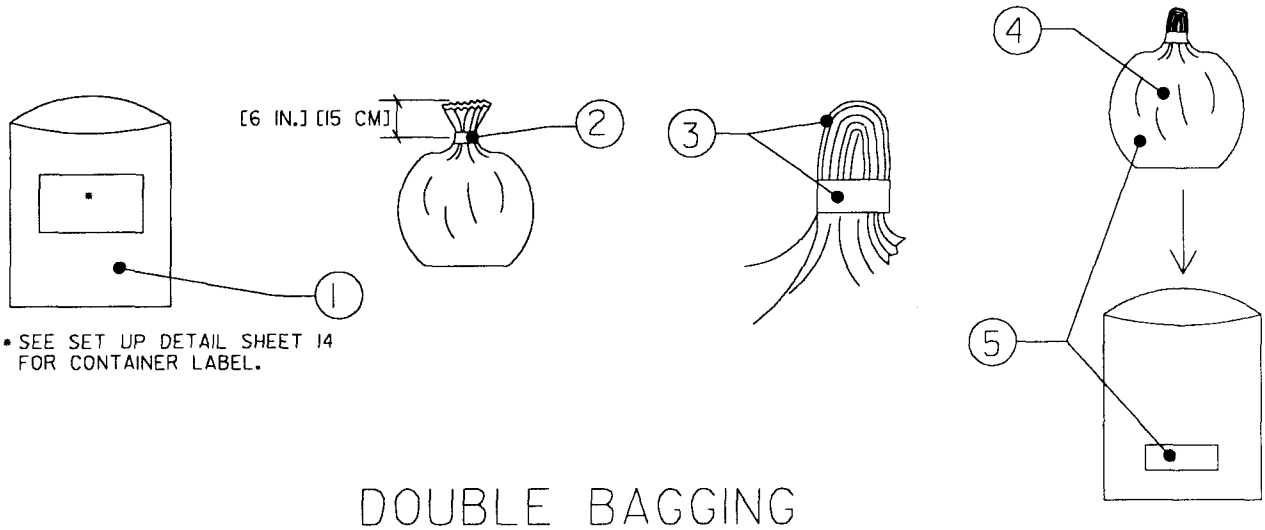

DOUBLE BAGGING

Containers—double bagging

1. Place the still-wet asbestos-containing and asbestos-contaminated material into a prelabled 6-mil polyethylene bag. Do not overfill. Do not use bag for asbestos-containing or asbestos-contaminated material that could puncture the bag. (See sheet 9C for packaging items that could puncture bags.)

2. Evacuate with HEPA vacuum, and seal collapsed bag by twisting top [6 in] [15 cm] closed and wrapping with a minimum of two layers of duct tape.

3. Twist top and fold over. Apply second wrap of duct tape.

4. Adequately wet clean outside of disposal bag by wet wiping, and take bag to the equipment and staging area.

5. Place bag inside a second prelabled 6-mil polyethylene bag.

6. Seal outer bag by repeating steps 2 and 3 above. Take bag to load-out unit; see sheet 20.

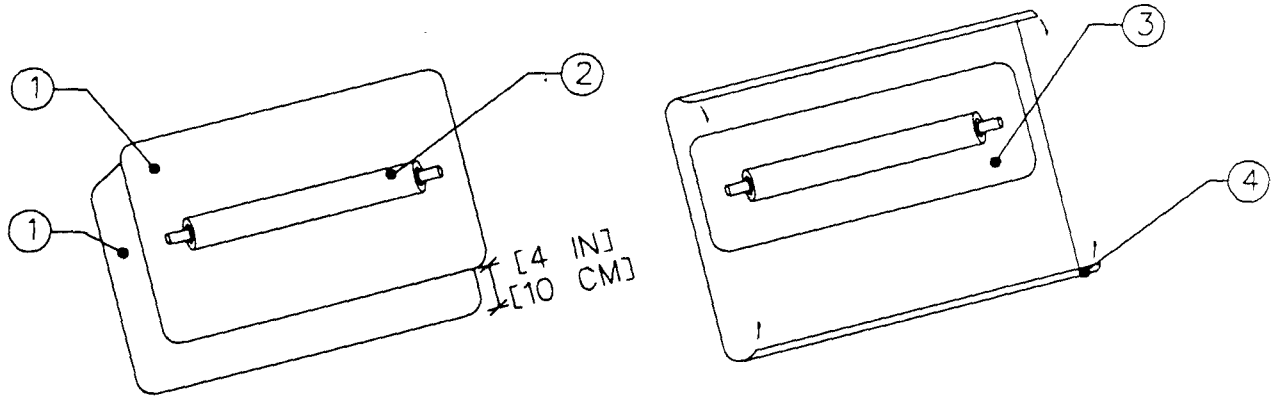

Containers—leak-tight wrapping

1. Place two layers of 6-mil polyethylene sheet on surface so that the bottom layer is offset [4 in] [10 cm] from the top layer.

2. Place the still-wet asbestos-containing or asbestos-contaminated material that is too large (boiler, vessel, pipe segment, etc.) to be placed in disposal bags on the top layer of polyethylene.

3. Wrap the top layer tightly around the contaminated material. Seal all edges of the top layer of sheeting with duct tape. Apply labels; see sheet 14.

4. Repeat procedure with bottom layer, including labeling. Take to load-out unit; see sheet 20.

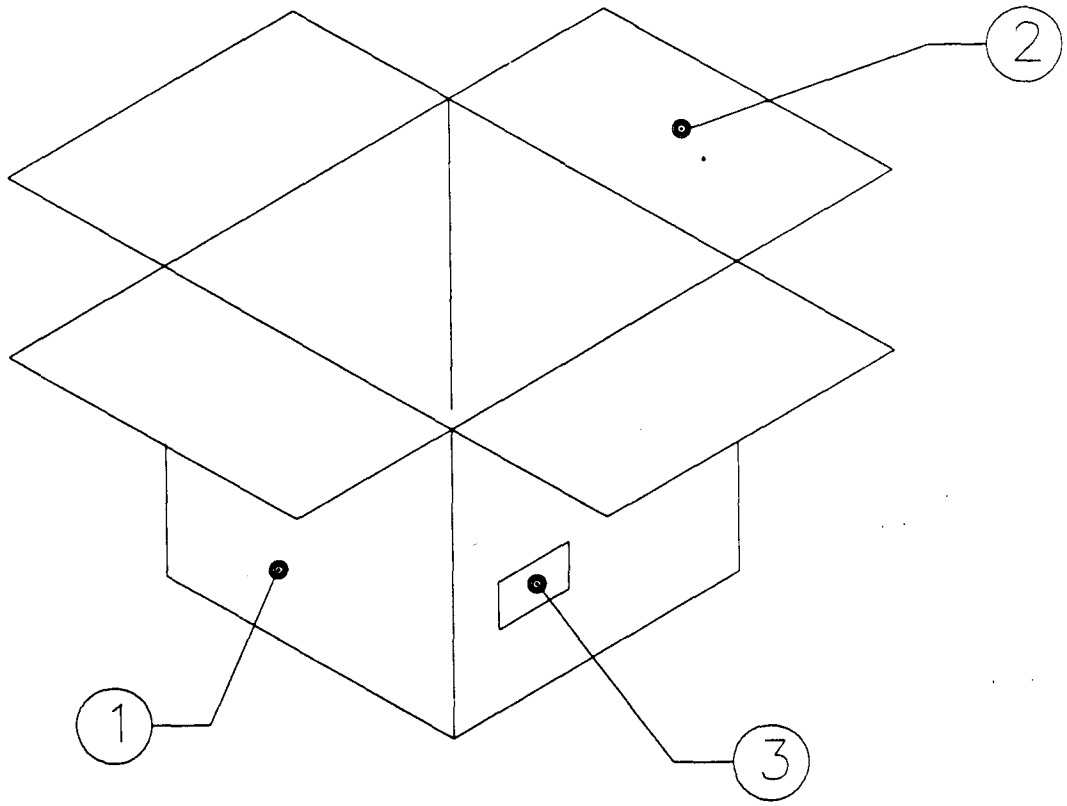

Containers—corrugated cardboard boxes

1. Place still-wet asbestos-containing or asbestos-contaminated material that could puncture disposal bags into heavy-duty corrugated cardboard boxes coated with plastic or wax that will retard deterioration from moisture.

2. Close flaps, and seal with duct tape.

3. Apply labels; see sheet 14. Place box into disposal bags; see sheet 9A. Take to load-out unit; see sheet 20.

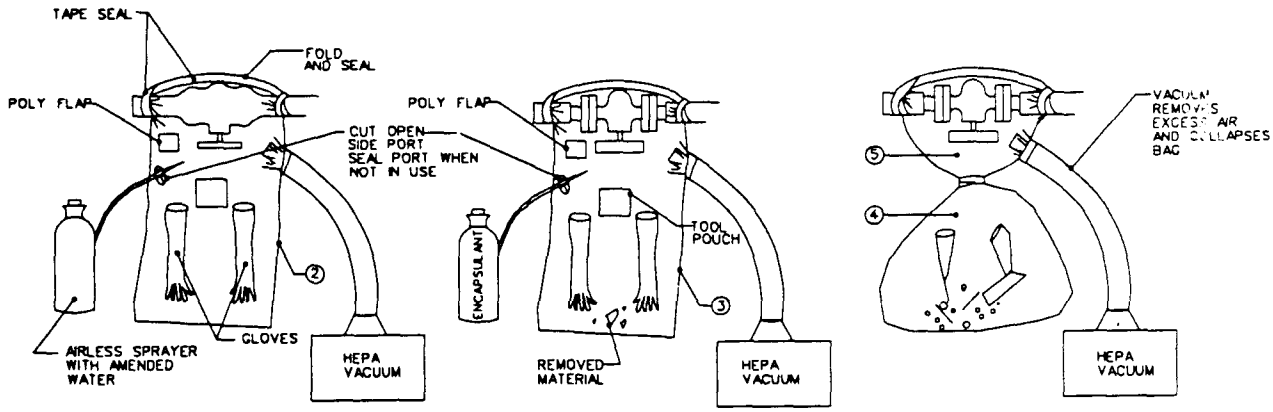

Glove bag

1. Construct modified containment area in accordance with sheet 21. NOTE: Inspect for structural integrity the insulation material adjacent to section being removed, since glove bag removal procedure is not appropriate if it will cause asbestos fiber release from adjacent asbestos-containing material.

2. Put tools and rags inside glove bag. Insulation adjacent to the asbestos-containing material being removed must be adequately wet cleaned and sprayed with an encapsulant before placing glove bag over the area to be removed. Install glove bag according to manufacturer's instructions. (NOTE: Negative-air glove bags may be used if first approved by Contracting Officer. Manufacturer procedures for negative-air glove bags will vary from procedures identified on this sheet.) Install HEPA filter vacuum cleaner with hose ducted into bag. Seal with duct tape. Smoke test for leaks. Soak insulation with amended water.

3. Remove insulation and clean exposed metal surfaces. Encapsulate exposed ends of insulation and metal surfaces. Adequately wet clean glove bag surfaces to below tool pouch.

4. Grasp tools in pouch and withdraw by pulling glove inside out. Twist glove above encased tools to create a constriction, and tape constricted area with duct tape. Cut through middle of taped area so that tools and glove bag will both remain sealed. Place encased tools into tool pouch of next glove bag or decontaminate by water immersion.

5. Evacuate glove bag, using HEPA vacuum. Twist bag to create a constriction below tool pouch. Wrap constricted area with duct tape. Cut bag [4 in] [10 cm] above constriction. Double bag cut off portion of bag; see sheet 9. Apply labels; see sheet 14. Cap and seal end of HEPA vacuum hose in order to prevent incidental fiber release.

6. Remove remaining portion of glove bag. Place in approved container; see sheet 9. Apply labels; see sheet 14. Dispose as asbestos-contaminated waste.

Final clearance requirements. For final clearance, Contractor and Contracting Officer will certify visual inspection of work area on sheet 19, *Certification of Final Cleaning and Visual Inspection*. Contract designee(s) will conduct final air-clearance monitoring as required by the contract.

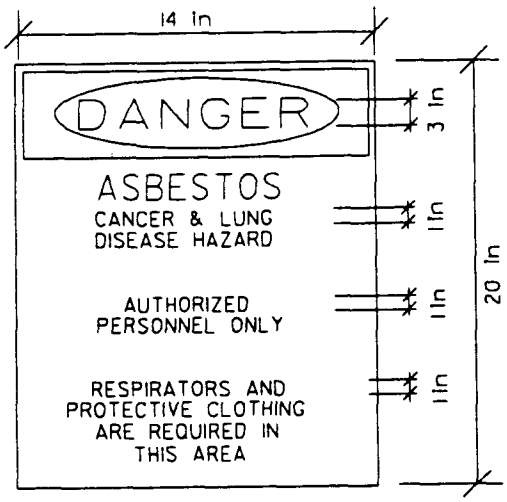

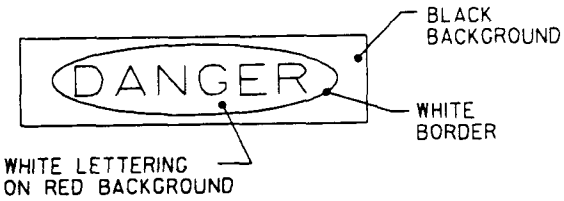

AREA WARNING SIGNS AND WARNING TAPE

DETAIL 011

Area warning signs and warning tape

1. Provide and install [4 mil] [0.10 mm] polyethylene warning tape at locations shown on the abatement area plan.

2. Warning tape is to be attached to wood or metal posts at [10 ft] [300 cm] on center. Tape must be [3 ft] [100 cm] from ground.

3. Attach both warning signs at each entrance of the work area and at [33 yd] [30 m] on center where security fencing is installed.

4. Warning signs must be in English and other languages required by the contract.

5. Install at eye level.

FIBER CONCENTRATION	MINIMUM REQUIRED RESPIRATOR	
NOT IN EXCESS OF 1 FIBER/CC	HALF-MASK AIR PURIFYING RESPIRATOR WITH HEPA FILTERS	
NOT IN EXCESS OF 5 FIBERS/CC	FULL FACEPIECE AIR-PURIFYING RESPIRATOR WITH HEPA FILTERS	
NOT IN EXCESS OF 10 FIBERS/CC	LOOSE FITTING HELMET OR HOOD, POWERED AIR-PURIFYING RESPIRATOR WITH HEPA FILTERS	
NOT IN EXCESS OF 10 FIBERS/CC	POWERED AIR-PURIFYING RESPIRATOR WITH FULL FACEPIECE AND HEPA FILTER	
NOT IN EXCESS OF 10 FIBERS/CC	LOOSE FITTING HELMET OR HOOD, SUPPLIED AIR RESPIRATOR OPERATED IN CONTINUOUS FLOW MODE WITH BACK-UP HEPA FILTER	
NOT IN EXCESS OF 10 FIBERS/CC	SUPPLIED AIR RESPIRATOR WITH FULL FACEPIECE OPERATED IN CONTINUOUS FLOW MODE WITH BACK-UP HEPA FILTER	
NOT IN EXCESS OF 100 FIBERS/CC	FULL FACEPIECE SUPPLIED AIR RESPIRATOR OPERATED IN PRESSURE-DEMAND MODE WITH BACK-UP HEPA FILTER	
GREATER THAN 100 FIBERS/CC OR UNKNOWN CONCENTRATION	FULL FACEPIECE SUPPLIED-AIR RESPIRATOR OPERATED IN PRESSURE-DEMAND MODE WITH AUXILIARY POSITIVE-PRESSURE SELF-CONTAINED BREATHING APPARATUS	

Respiratory protection table

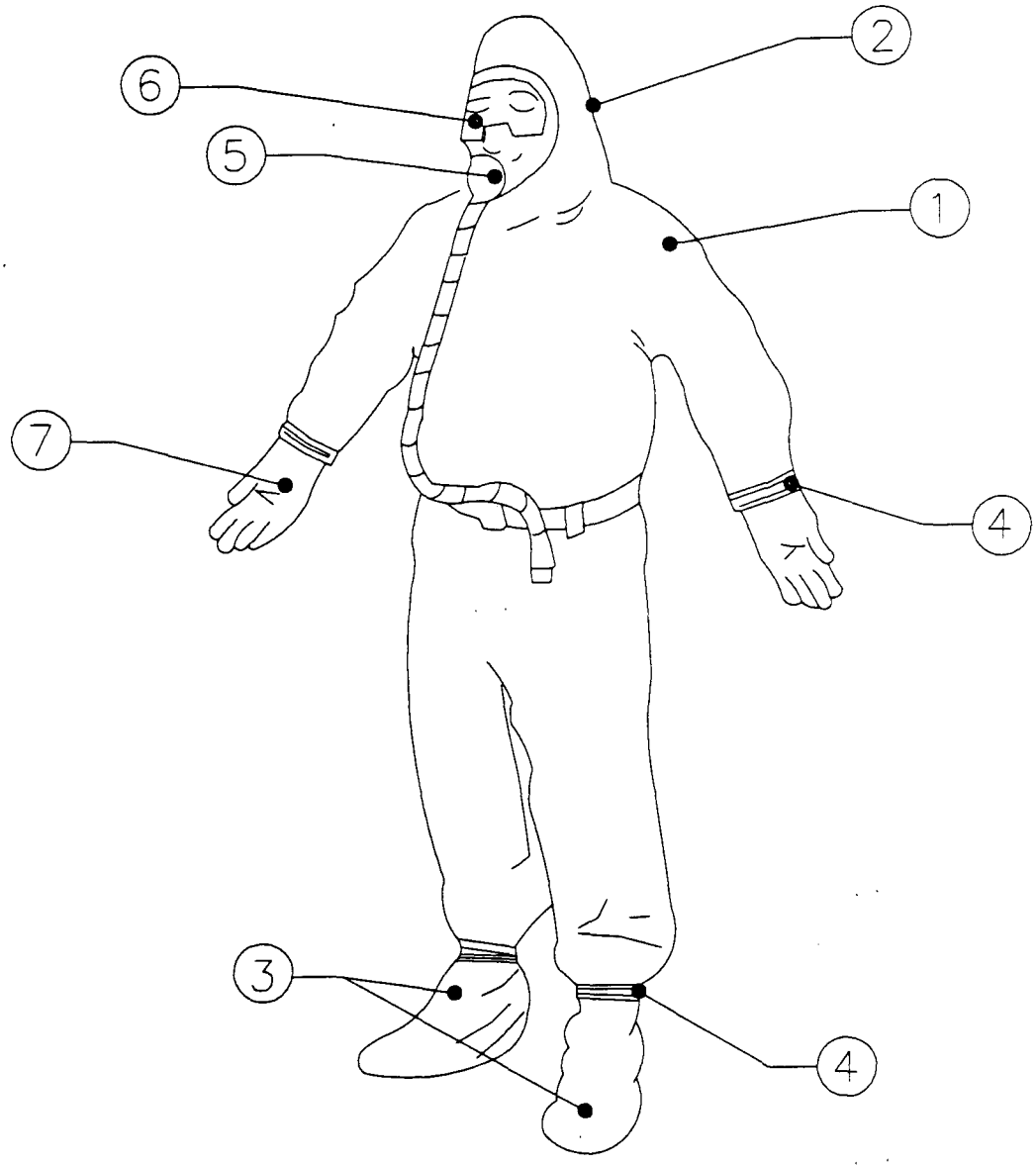

Protective clothing

1. Disposable or reusable full body suit with elastic around hood and shoe cover openings is required or as otherwise specified in the contract.

2. Hood shall be worn over respirator's head and neck straps.

3. Shoe covers shall be worn over work shoes.

4. Cuffs shall be taped with duct tape at wrists and ankles in order to prevent infiltration.

5. Cartridge-type air-purifying HEPA filter respirator is minimal requirement. Type shall be selected in accordance with sheet 12.

6. If eye protection is not integral with respirator, protection goggles are required.

7. Rubber work gloves are recommended to be worn alone or under outer work gloves provided for hand and operation safety.

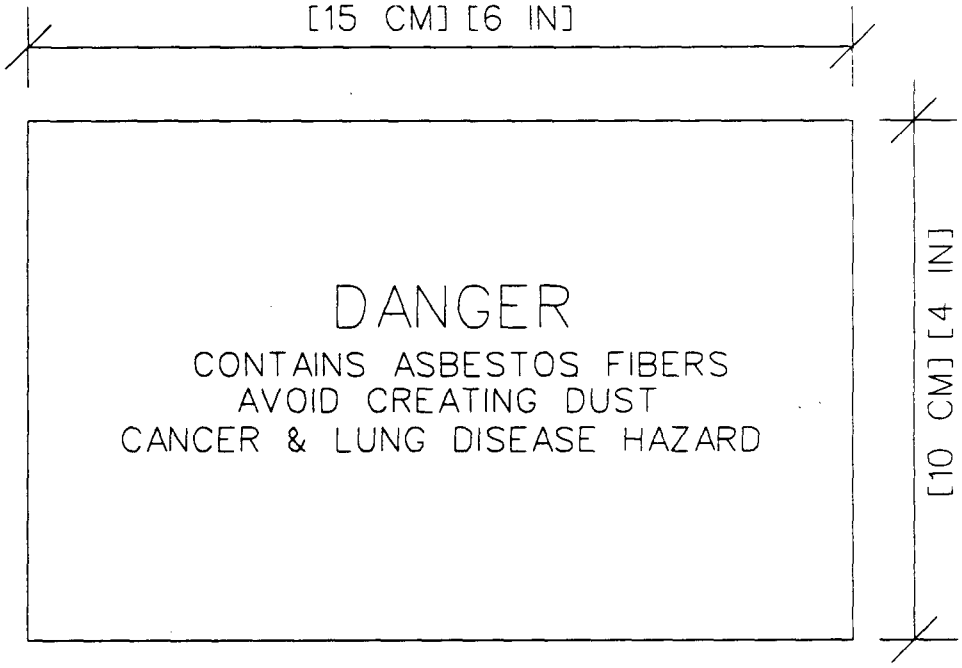

Disposal container label

Attach warning labels to each disposal container removed from abatement area.

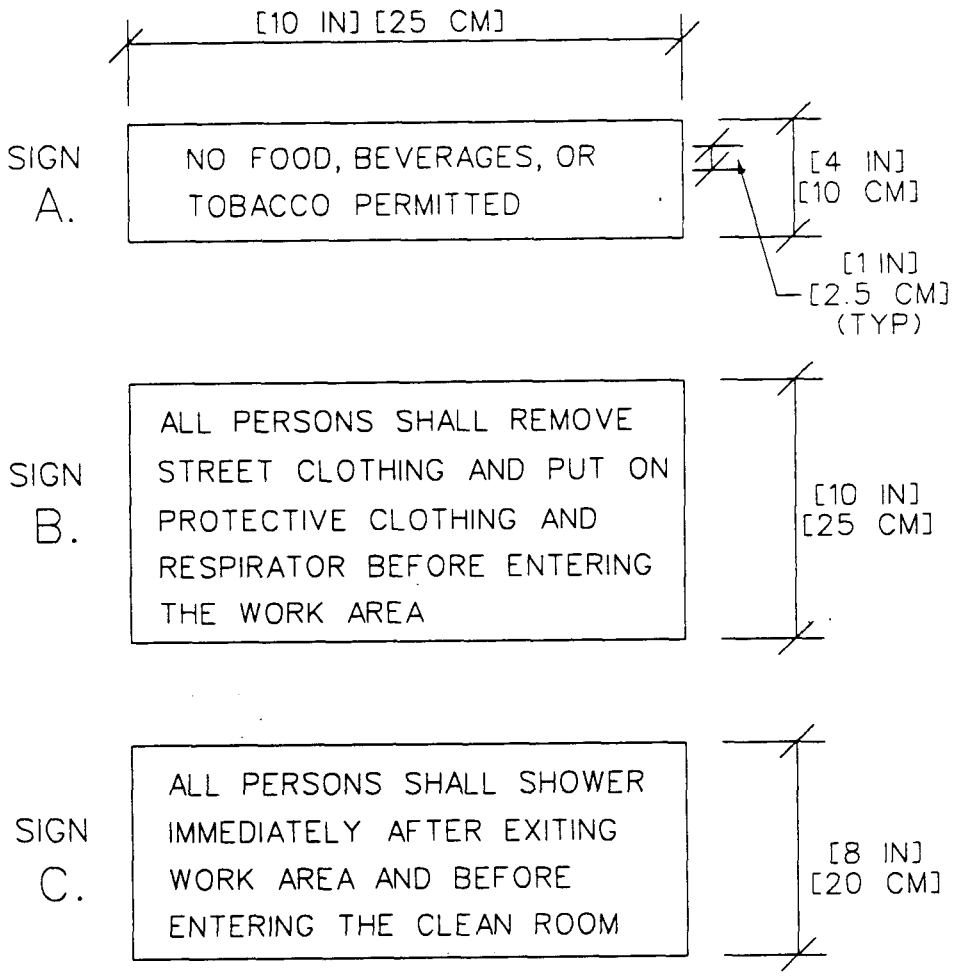

Decontamination unit signage

1. Provide signs in English and other languages required by the contract.

2. Install at eye level.

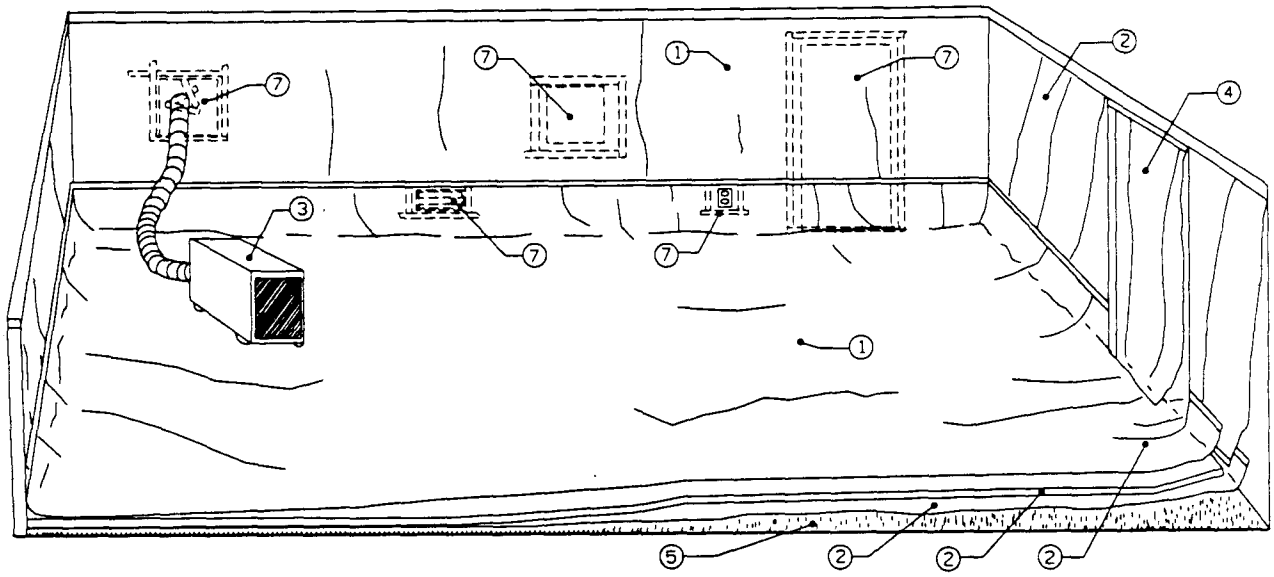

Preparation of full containment area for final clearance (for carpeted floors)

1. Accumulate all loose material for disposal. Place material in approved container; see sheet 9. Apply labels; see sheet 14. Adequately wet clean and HEPA vacuum all wall, floor, and equipment surfaces.

2. Contractor and contracting officer will certify visual inspection of work area on sheet 19, *Certification of Final Clearing and Visual Inspection*.

3. Apply lockdown encapsulant.

4. Remove polyethylene from walls, floor, and plywood. HEPA vacuum plywood before removal. Critical barriers sealing all windows, doors, wall openings, electrical outlets, etc., are to remain. Remove any temporary equipment enclosures used; see sheet 24. Treat polyethylene as asbestos-contaminated material. Place in approved container; see sheet 9 for leak-tight wrapping. Apply labels; see sheet 14. NOTE: With approval from the Contracting Officer, uncontaminated plywood can be treated as ordinary construction waste; otherwise, treat as asbestos-contaminated material.

5. HEPA filter unit remains in place and operating.

6. Door into contamination unit or load-out room remains.

7. HEPA vacuum carpet.

8. Prepare area for final clearance.

9. Contractor and Contracting Officer will recertify visual inspection of work area on sheet 19, *Certification of Final Cleaning and Visual Inspection*.

10. Contract designee(s) will conduct final air-clearance monitoring as required by the contract.

11. Upon instruction from Contracting Officer, shut down HEPA filter ventilation system, detach duct work, move system to equipment room of decontamination unit, clear and dispose of waste; see sheet 8. Remove critical barrier and place in approved container; see sheet 9. Apply labels; see sheet 14. Dispose of waste as asbestos-contaminated material.

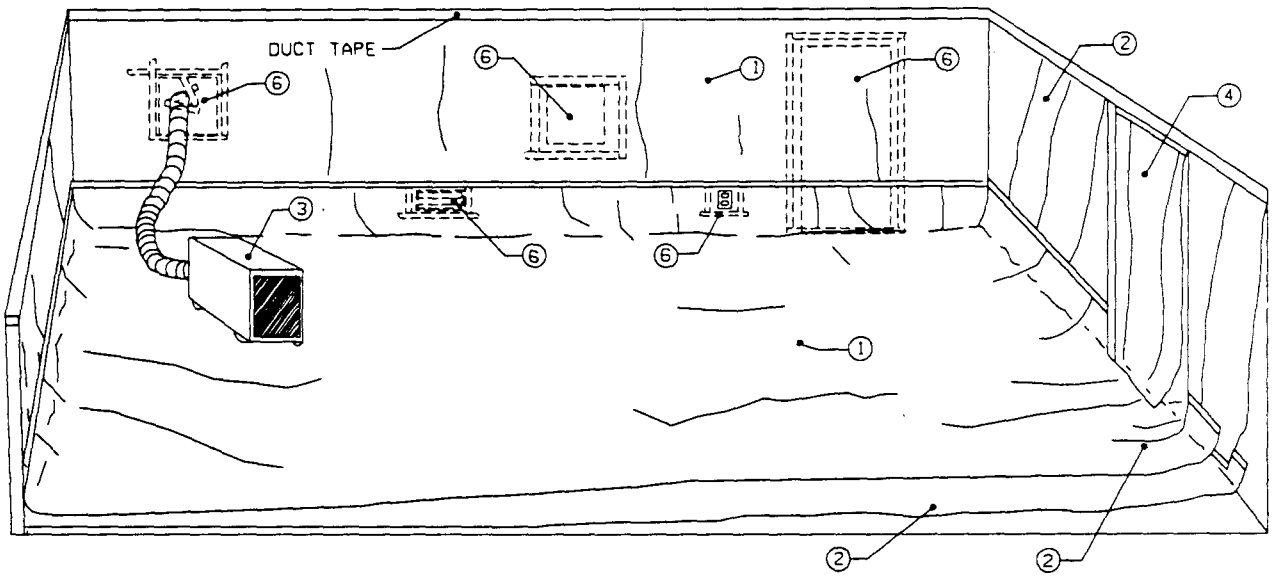

Preparation of full containment area for final clearance (for hard-surfaced floors)

1. Accumulate all loose material for disposal. Place in approved container; see sheet 9. Apply labels; see sheet 14. Adequately wet clean and HEPA vacuum all wall, floor, and equipment surfaces.

2. Contractor and contracting officer will certify visual inspection of work area on sheet 19, *Certification of Final Clearing and Visual Inspection.*

3. Apply lockdown encapsulant.

4. Remove polyethylene on walls and floor. Critical barriers sealing all windows, doors, wall openings, electrical outlets, etc., are to remain. Remove any temporary equipment enclosures used; see sheet 24. Treat polyethylene as asbestos-contaminated material. Place in approved container; see sheet 9 for leak-tight wrapping. Apply labels; see sheet 14.

5. HEPA filter unit remains in place and operating.

6. Door into decontamination unit or load-out room remains.

7. Prepare area for final clearance.

8. Contractor and Contracting Officer will recertify visual inspection of work area on sheet 19, *Certification of Final Cleaning and Visual Inspection.*

9. Contract designee(s) will conduct final air-clearance monitoring as required by the contract.

10. Upon instruction from Contracting Officer, shut down HEPA filter ventilation system, detach duct work, move system to equipment room of decontamination unit, clear and dispose of waste; see sheet 8. Remove critical barrier and place in approved container; see sheet 9. Apply labels; see sheet 14. Dispose of waste as asbestos-contaminated material.

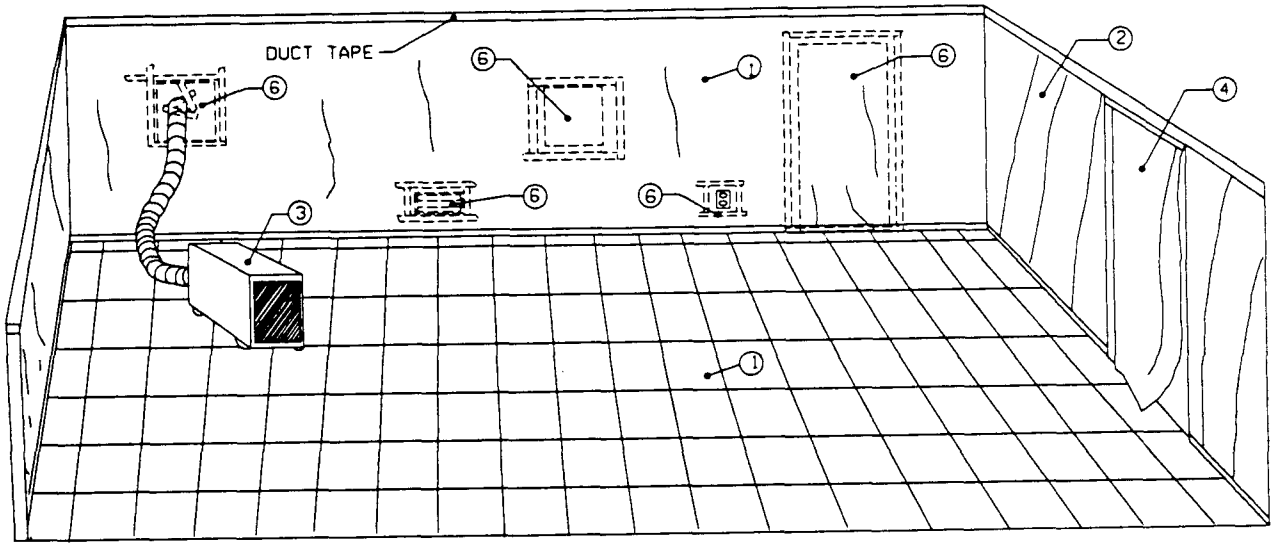

Preparation of containment area for final clearance (for vinyl tile floors)

1. Accumulate all loose material for disposal; see sheet 9. Apply labels; see sheet 14. Adequately wet clean all wall, floor, and equipment surfaces.

2. Contractor and contracting officer will certify visual inspection of work area on sheet 19, *Certification of Final Clearing and Visual Inspection.*

3. Apply lockdown encapsulant.

4. Remove polyethylene from walls. Critical barriers sealing all windows, doors, wall openings, electrical outlets, etc., are to remain. Remove any temporary equipment enclosures used; see sheet 24. Treat polyethylene as asbestos-contaminated material. Place in approved container; see sheet 9 for leak-tight wrapping. Apply labels; see sheet 14.

5. HEPA filter unit remains in place and operating.

6. Door into decontamination unit or load-out room remains.

7. Prepare area for final clearance.

8. Contractor and Contracting Officer will recertify visual inspection of work area on sheet 19, *Certification of Final Cleaning and Visual Inspection.*

9. Contract designee(s) will conduct final air-clearance monitoring as required by the contract.

10. Upon instruction from Contracting Officer, shut down HEPA filter ventilation system, detach duct work, move system to equipment room of decontamination unit, clear and dispose of waste; see sheet 8. Remove critical barrier and place in approved container; see sheet 9. Apply labels; see sheet 14. Dispose of waste as asbestos-contaminated material.

Certification of Final Cleaning And Visual Inspection

Individual abatement task as identified in paragraph, Description of Work _____

In accordance with the cleaning and decontamination procedures specified in the Contractor's asbestos hazard abatement plan and this contract, the Contractor hereby certifies that he/she has thoroughly visually inspected the decontaminated regulated work area (all surfaces, including pipes, beams, ledges, walls, ceiling, floor, decontamination unit, etc.) in accordance with ASTM E1368, *Standard Practice for Visual Inspection of Asbestos Abatement Projects*, and has found no dust, debris, or asbestos-containing material residue.

BY: (Contractor's signature) _____ Date _____

Print name and title _____

(Contractor's Onsite Supervisor signature) _____ Date _____

Print name and title _____

(Contractor's Industrial Hygienist signature) _____ Date _____

Print name and title _____

Contracting Officer Acceptance or Rejection

The Contracting Officer hereby determines that the Contractor has performed final cleaning and visual inspection of the decontaminated regulated work area (all surfaces including pipes, beams, ledges, walls, ceiling, floor, decontamination unit, etc.) and by quality assurance inspection, finds the Contractor's final cleaning to be:

☐ Acceptable

☐ Unacceptable, Contractor instructed to reclean the regulated work area.

BY: Contracting Officer's Representative

Signature _____ Date _____

Print name and title _____

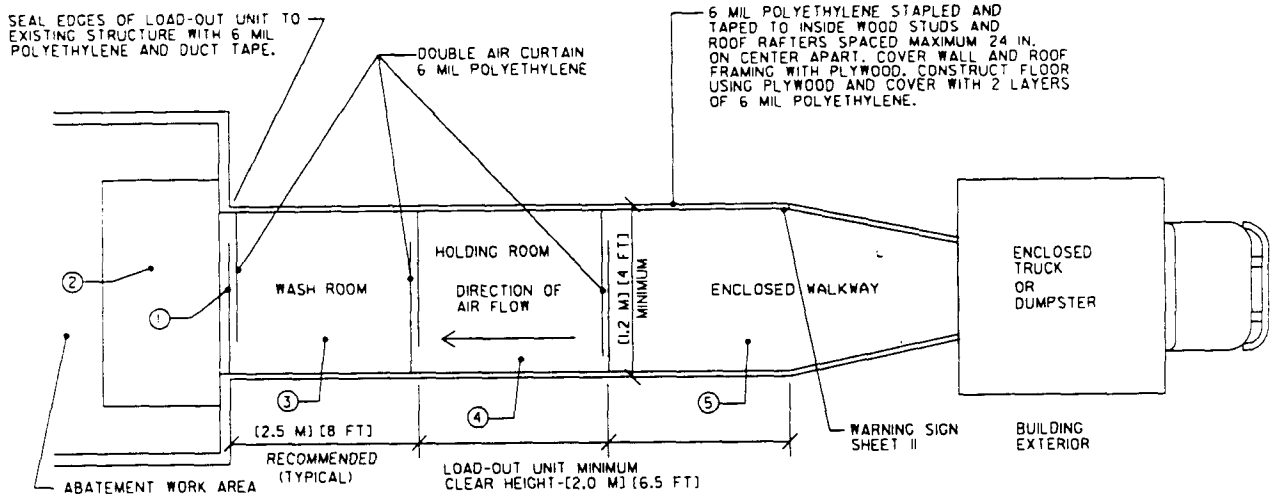

Load-out unit floor plan

1. Abatement worker is to enter and exit abatement work area only through decontamination unit.

2. Place additional 6-mil polyethylene sheeting on top of abatement area floor. Double bag asbestos-contaminated material in this area before removing.

3. Wet wipe bags, equipment, and containers, and take to holding room.

4. Stage clean bags, equipment, and containers in holding room until disposal worker removes them.

5. Disposal workers, wearing full protective clothing and appropriate respirator protection, carry decontaminated bags and containers through enclosed walkway and into enclosed truck or Dumpster.

Final clearance requirements. Before breaking down load-out unit, adequately wet clean and HEPA vacuum all surfaces and prepare area for final clearance. Contractor and Contracting Officer will certify visual inspection of work area on sheet 19, *Certification of Final Cleaning and Visual Inspection*. Contractor will apply lockdown encapsulant. Contract designee(s) will conduct final air-clearance monitoring as required by the contract. Breakdown load-out area upon instructions from Contracting Officer. Treat as asbestos- contaminated material. Place in approved container; see sheet 9. Apply labels; see sheet 14. Dispose of as required by the contract.

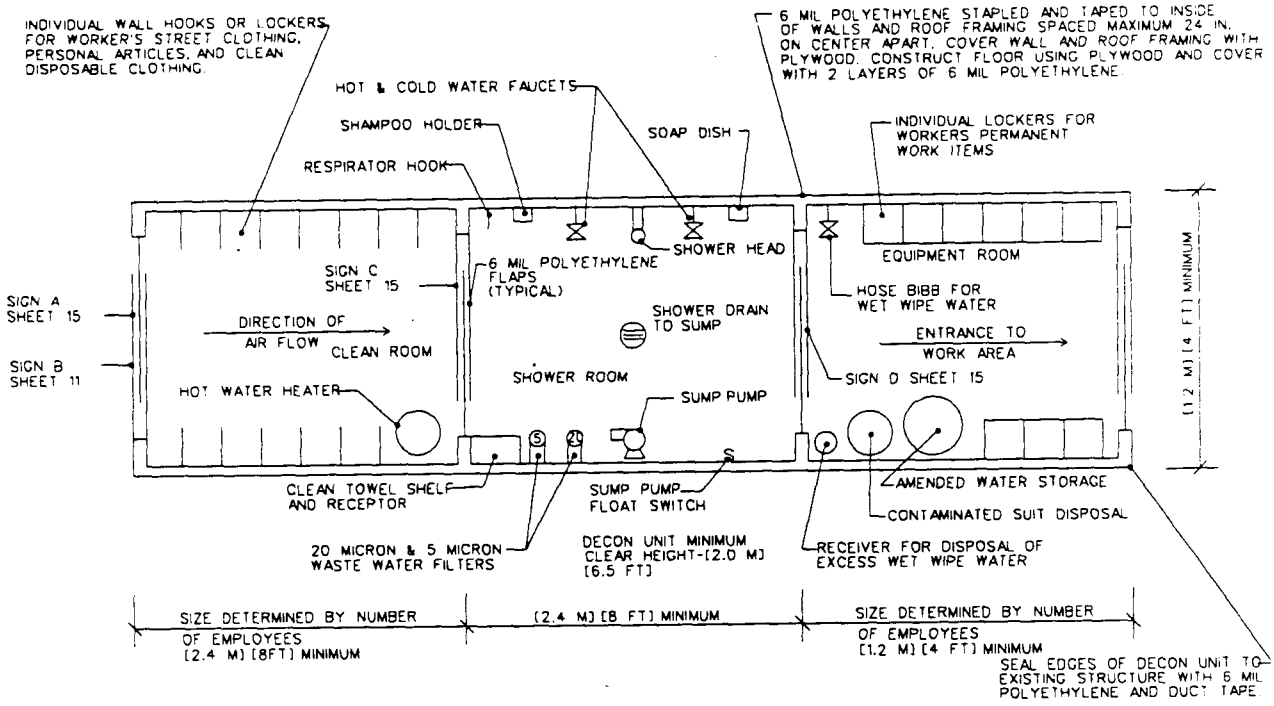

Decontamination unit floor plan

1. Establish work area so that unauthorized entry is prevented; see sheets 11 and 15. Before entering the work area, all personnel shall remove their street clothing in the clean room and put on protective clothing and respirator.

2. Whenever exiting the work area, all personnel shall:

- Vacuum clothing and shoes outside equipment room.
- Remove all clothing and equipment (except respirator) in equipment room.
- Store work shoes and equipment in locker.
- With respirator still on, shower thoroughly, including hair. Then remove respirator and finish shower.
- Proceed to clean room and put on street clothes.

3. See sheet 23 for minimum plumbing requirements, including wastewater filtration. Ensure that plumbing and specified filter size meet local requirements.

4. Twice daily, or more often if necessary, and before breaking down decontamination unit after abatement, adequately wet clean and HEPA vacuum all wall, floor, equipment, and other surfaces. Waste collected in shower room and equipment room shall be treated as asbestos-contaminated material. Place in approved container; see sheet 9. Apply labels; see sheet 14.

5. Prepare for final clearance.

Final clearance requirements. Contractor and Contracting Officer will certify visual inspection of work area on sheet 19, *Certification of Final Cleaning and Visual Inspection.* Contract designee(s) will conduct final air-clearance monitoring as required by the contract. If the unit is not a prefabricated decontamination unit, apply lockdown encapsulant before final air-clearance monitoring. After approval of final air clearance, break down and treat polyethylene as asbestos-contaminated material. Place in approved container; see sheet 9. Apply labels; see sheet 14. Dispose of as required by the contract.

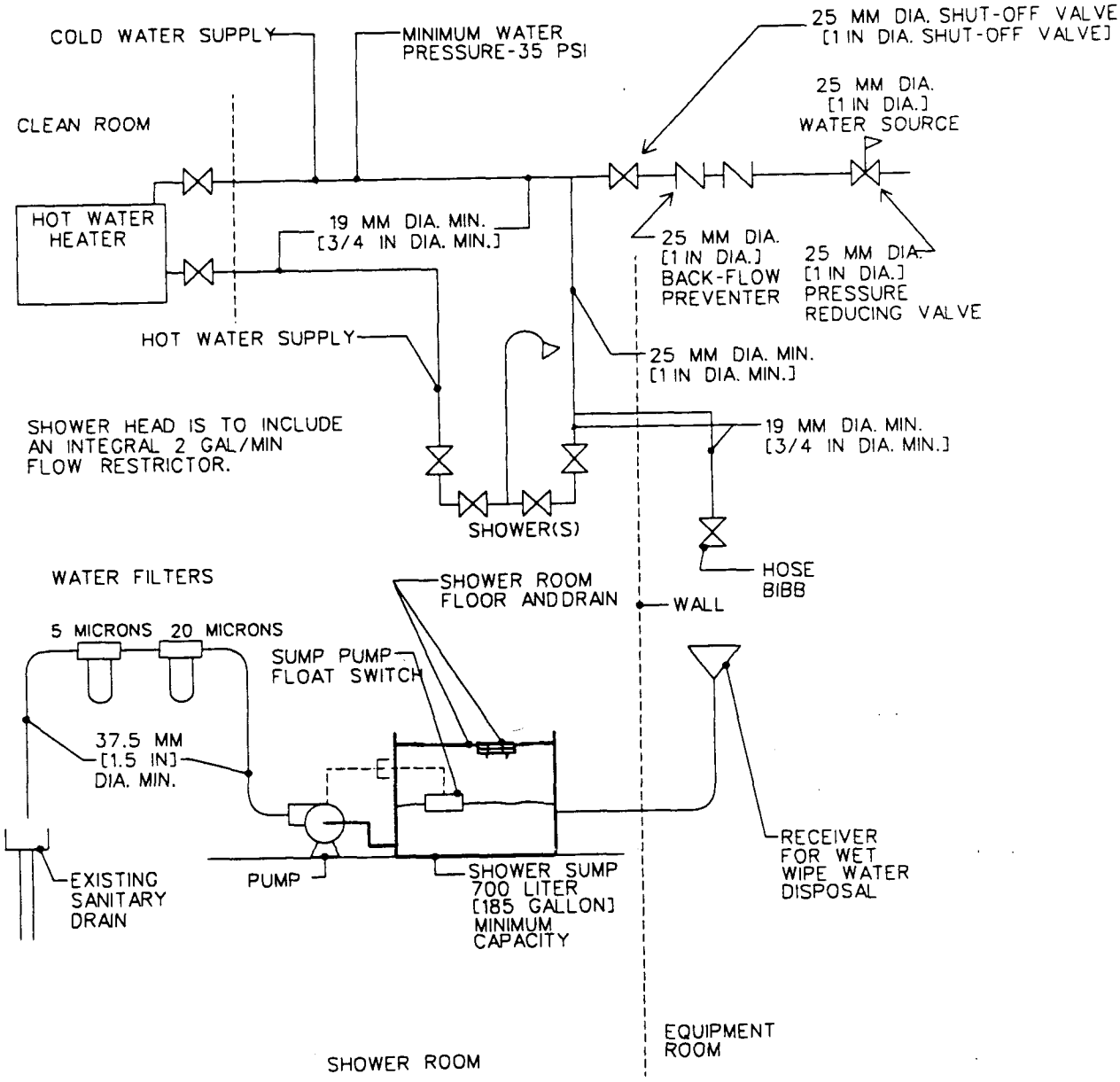

SIZE CAPACITY OF SUMP PUMP FOR TWICE THE EXPECTED WASTE WATER FLOW.

Decontamination unit piping details

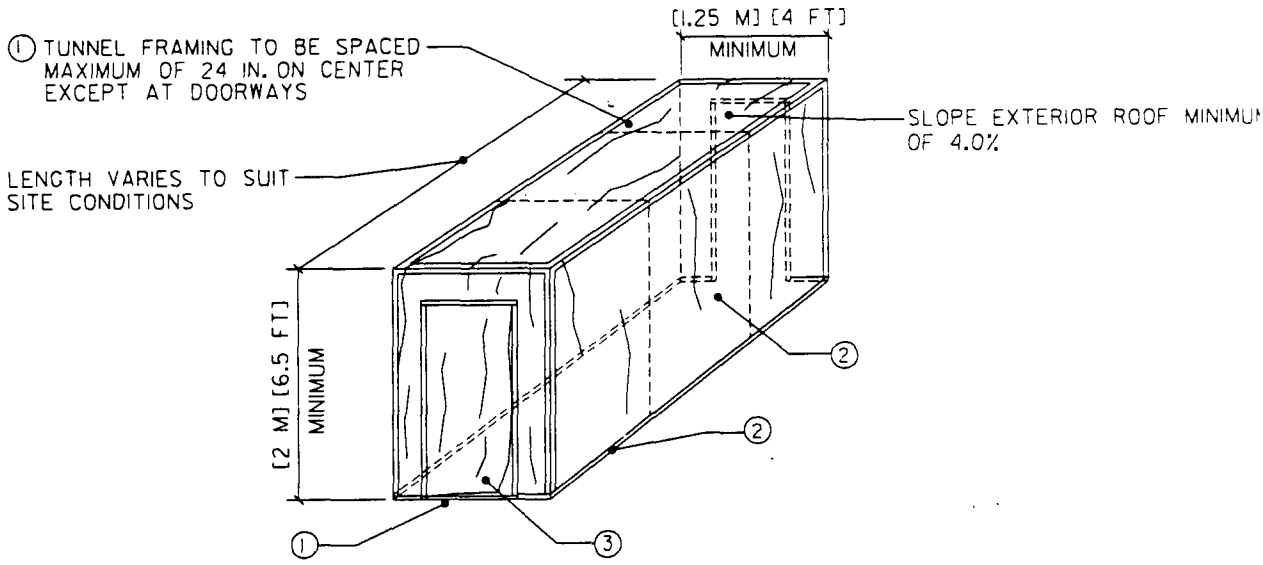

Access tunnel

1. Construct a wood frame tunnel; cover all sides and the roof of the frame with polyethylene. NOTE: Cover all sides and roof with plywood or reinforced polyethylene if access tunnel is located outside.

2. Cover entire tunnel with 6-mil polyethylene; seal seams and edges with duct tape, making the tunnel airtight and watertight.

3. Twice daily, or more frequently if necessary, adequately wet clean and HEPA vacuum all wall, floor, and equipment surfaces.

Final Clearance Requirements. Upon completion of abatement work, remove access tunnel in accordance with the procedures listed on sheet 16, 17, or 18, and prepare for final clearance.

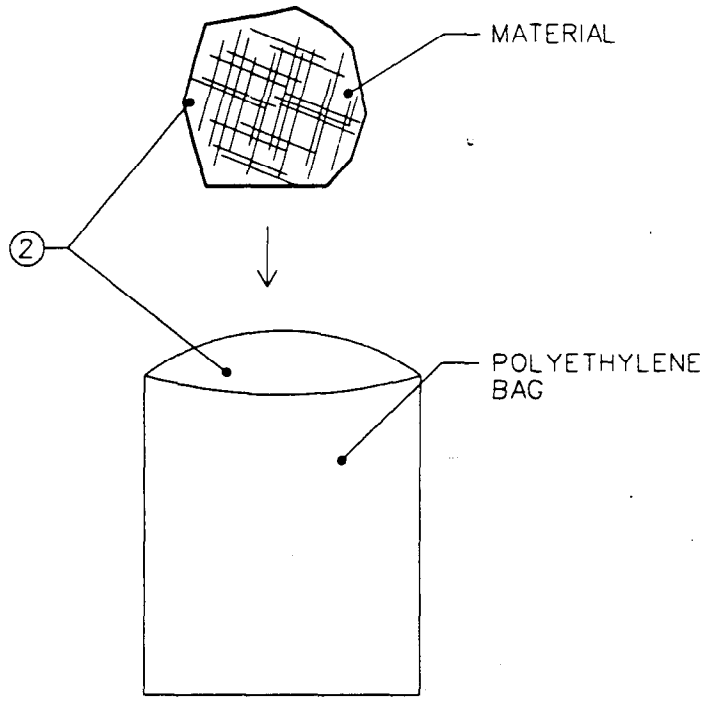

Removal of miscellaneous asbestos-containing materials

1. Establish work area so that unauthorized entry is prevented; see sheet 11. Prepare containment area as specified on sheet 21.

2. Adequately wet mist materials with amended water. Remove and place in approved container; see sheet 9. Apply labels; see sheet 14.

3. HEPA vacuum and wet wipe area in the immediate vicinity of removed materials.

4. Prepare area for final clearance.

5. Carry out final clearance requirements as specified on sheet 21.

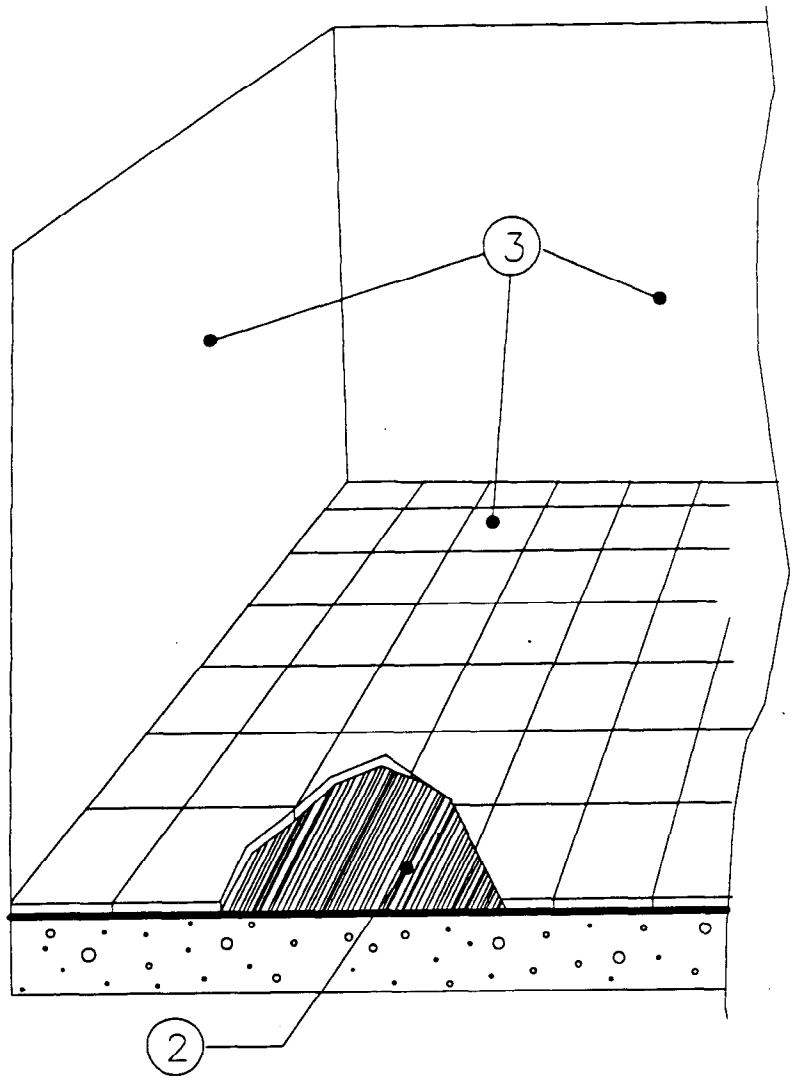

Repair of vinyl asbestos tile adhered to concrete floor system

1. Prepare work area; see sheet 21. Prevent unauthorized entry; see sheet 11.

2. Remove damaged asbestos tile. Place into an approved container; see sheet 9. Apply labels; see sheet 14.

3. HEPA vacuum and adequately wet clean.

4. Inspect.

5. Install new tile.

6. Prepare area for final clearance.

7. Carry out final clearance requirements specified on sheet 21.

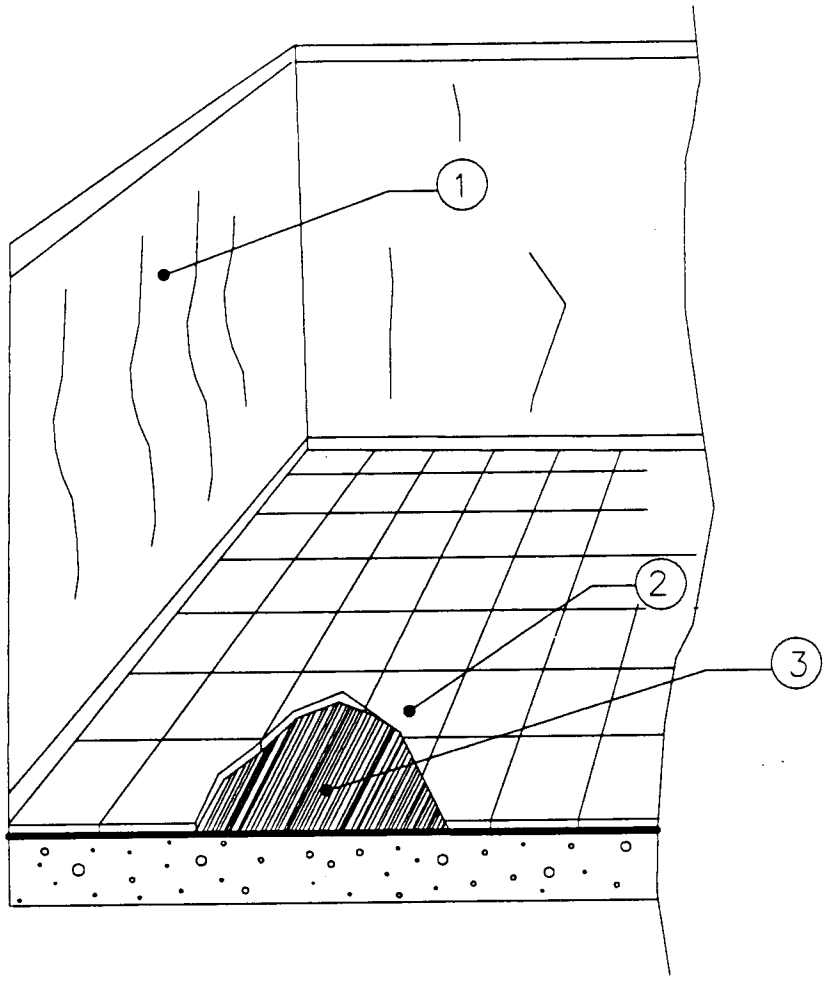

Removal of vinyl asbestos tile adhered to concrete floor system by asbestos-containing adhesive

1. Prepare containment area as specified on sheet 21. NOTE: Where full containment area is required, follow instructions on sheet 4, except omit polyethylene on floor.

2. Lightly flood asbestos tile with amended water, and let soak for 48 hours. Remove asbestos tile and adhesive while they are wet in order to prevent asbestos fiber release. Place tile and adhesive into an approved container; see sheet 9. Apply labels; see sheet 14.

3. Clean, HEPA vacuum, and wet wipe all surfaces.

4. Inspect and reclean area as necessary.

5. Prepare area for final air clearance.

6. Carry out final clearance requirements as specified on applicable sheet 18 or 21.

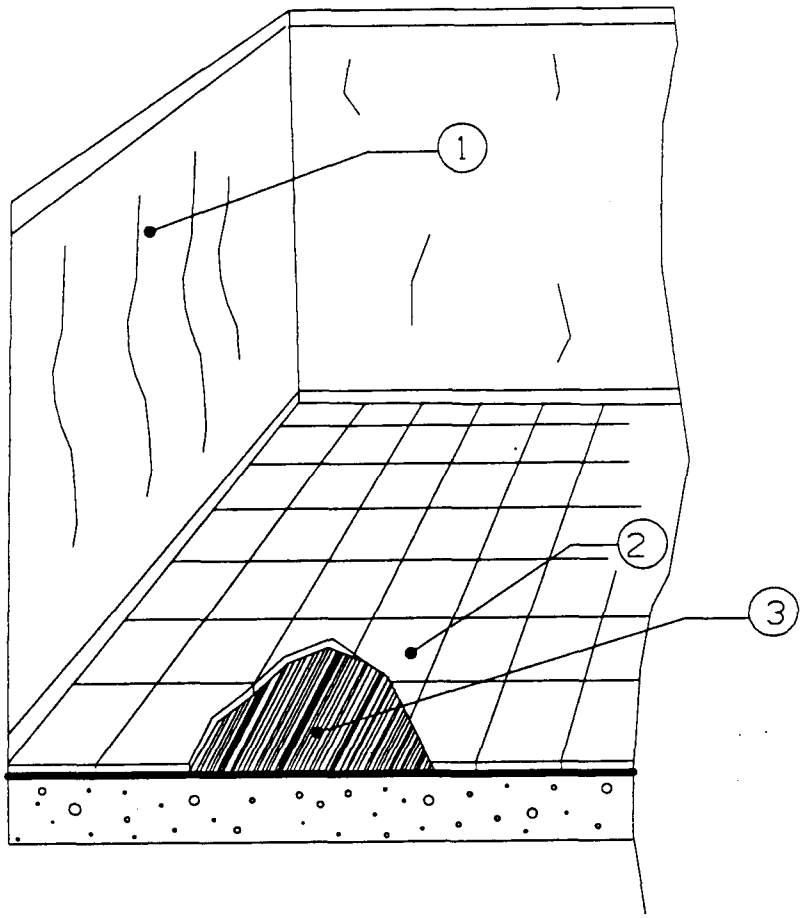

Removal of vinyl asbestos tile adhered to concrete floor system by asbestos-free adhesive

1. Prepare containment area as specified on sheet 21. NOTE: Where full containment area is required, follow instructions on sheet 4, except omit polyethylene on floor.

2. Lightly flood asbestos tile, and soak for 48 hours. Remove asbestos tile and adhesive while they are wet in order to prevent asbestos fiber release. Place tile and adhesive into an approved container; see sheet 9. Apply labels; see sheet 14.

3. Clean, HEPA vacuum, and adequately wet clean all surfaces.

4. Inspect and reclean area as necessary.

5. Prepare area for final air clearance.

6. Carry out final clearance requirements as specified on applicable sheet 18 or 21.

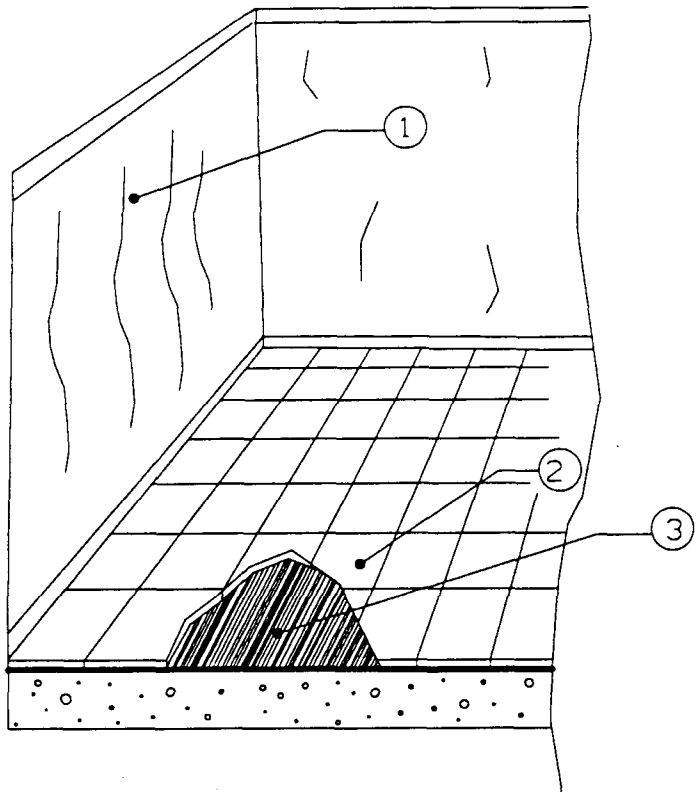

USE THIS DETAIL ONLY FOR
- SMALL SCALE PROJECTS
- GROUND FLOOR APPLICATIONS

Removal of vinyl asbestos tile and chemical dissolution of asbestos-containing adhesives on concrete floor system

1. Prepare containment area as specified on sheet 4.

2. Lightly flood asbestos tile, and soak for 48 hours. Remove asbestos tile and adhesive while they are wet in order to prevent asbestos fiber release. Place tile and adhesive into an approved container; see sheet 9. Apply labels; see sheet 14.

3. Before removing adhesive, increase ventilation rate to 10 air changes per hour. Air must be exhausted outside building.

4. Apply liquid adhesive remover. As soon as the adhesive is soft enough to scrape, remove and put into approved container; see sheet 9. Apply labels; see sheet 14.

5. Prepare area for final air clearance.

6. Carry out final clearance requirements as specified on sheet 18.

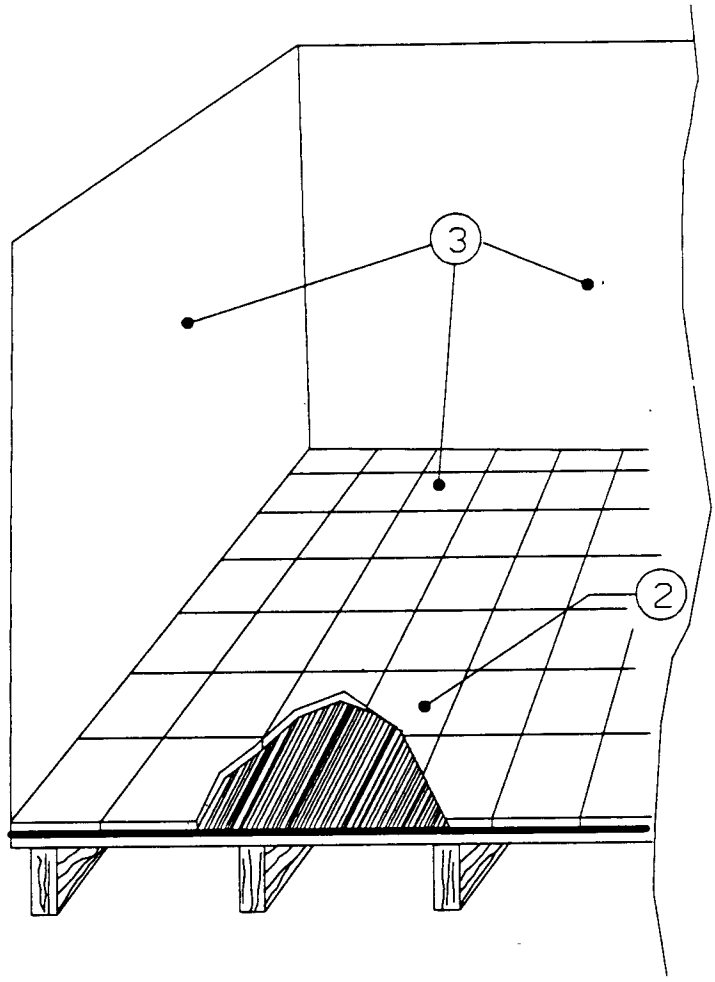

Repair of vinyl asbestos tile adhered to wood floor system by asbestos-containing adhesive

1. Prepare work area; see sheet 21. Prevent unauthorized entry; see sheet 11.

2. Adequately mist and remove damaged asbestos tile and adhesive. Place tile and adhesive into an approved container; see sheet 9. Apply labels; see sheet 14.

3. HEPA vacuum and wet wipe area.

4. Install new tile.

5. Inspect.

6. Prepare area for final clearance.

7. Carry out final clearance requirements specified on sheet 21.

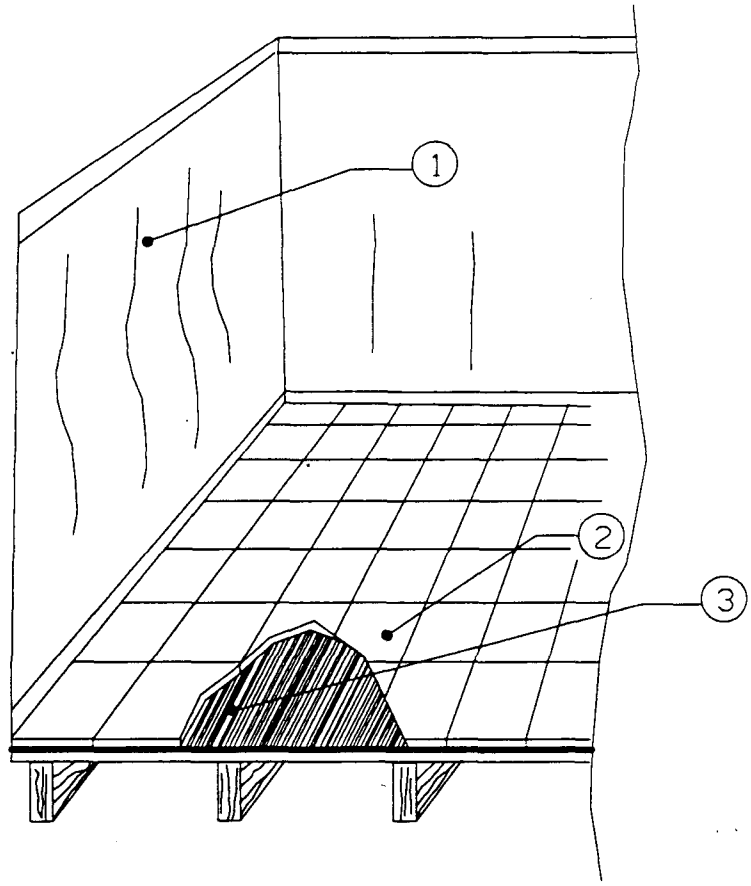

Removal of vinyl asbestos tile adhered to wood floor system by asbestos-containing adhesive

1. Prepare containment area as specified on sheet 21, except omit polyethylene on floor. NOTE: Where full containment is required, follow instructions on sheet 4.

2. Where wood flooring is to remain, adequately wet and remove asbestos tile and adhesive in order to prevent asbestos fiber release. Place tile and adhesive into an approved container; see sheet 9. Apply labels; see sheet 14. Note: Where wood flooring is to be removed, adequately wet and remove existing wood flooring. Treat as asbestos-contaminated material. Spread a plastic sheet on the floor, and stack removed wood flooring onto two layers of 6-mil polyethylene. Wrap each polyethylene layer around the stack, sealing all joints and edges with duct tape; see sheet 9. Apply labels to stack; see sheet 14. Smaller material will be placed in approved container; see sheet 9. Apply labels; see sheet 14.

3. Clean, HEPA vacuum, and adequately wet clean all surfaces.

4. Inspect and reclean area as necessary.

5. Prepare area for final air clearance.

6. Carry out final clearance requirements specified in applicable sheet 18 or 21.

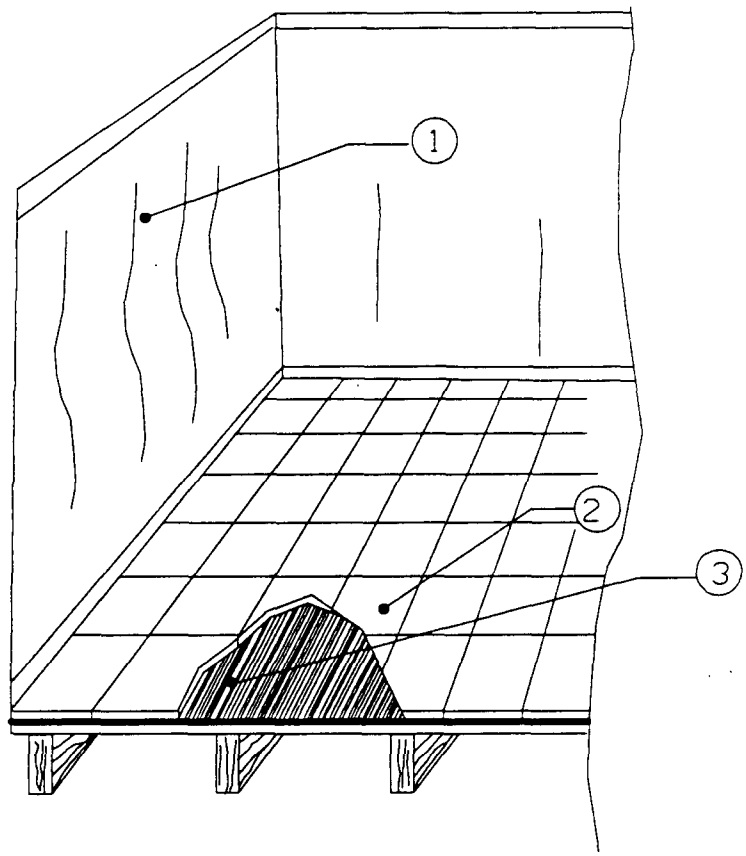

Removal of vinyl asbestos tile adhered to wood floor system by asbestos-free adhesive

1. Prepare containment area as specified on sheet 21. NOTE: Where full containment is required, follow instructions on sheet 4, except omit polyethylene on floor.

2. Adequately wet and remove asbestos tile and adhesive while they are wet in order to prevent asbestos fiber release. Place tile and adhesive into an approved container; see sheet 9. Apply labels; see sheet 14.

3. Clean, HEPA vacuum, and wet wipe all surfaces.

4. Inspect and reclean area as necessary.

5. Prepare area for final air clearance.

6. Carry out final clearance requirements specified on applicable sheet 18 or 21.

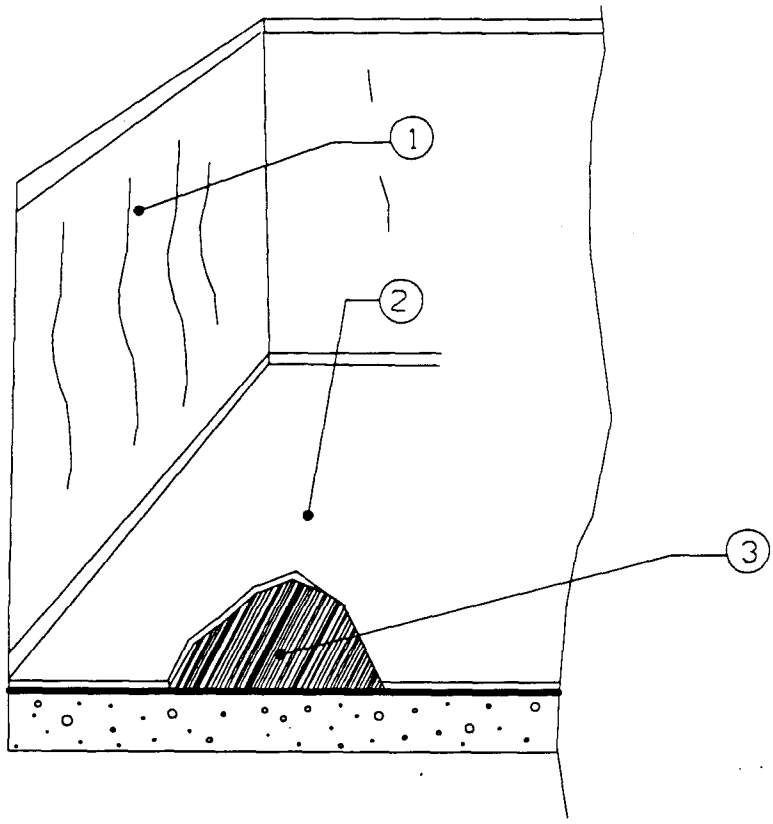

Removal of sheet-flooring adhered to concrete floor system by asbestos-containing adhesive

1. Prepare containment area as specified on sheet 21. NOTE: Where full containment is required, follow instructions on sheet 4, except omit polyethylene on floor.

2. Mist exposed surfaces with amended water just before sheet flooring is removed. Remove flooring in manageable pieces and place on two layers of 6-mil polyethylene. Wrap each layer of polyethylene around the stack, sealing all joints and edges with duct tape; see sheet 9. Apply labels; see sheet 14. Place smaller material in approved container; see sheet 9. Apply labels; see sheet 14.

3. Remove remaining adhesive down to bare concrete. Place in approved container; see sheet 9. Apply labels; see sheet 14.

4. Clean, HEPA vacuum, and wet wipe all surfaces.

5. Inspect and reclean area as necessary.

6. Prepare area for final air clearance.

7. Carry out final clearance requirements specified on applicable sheet 18 or 21.

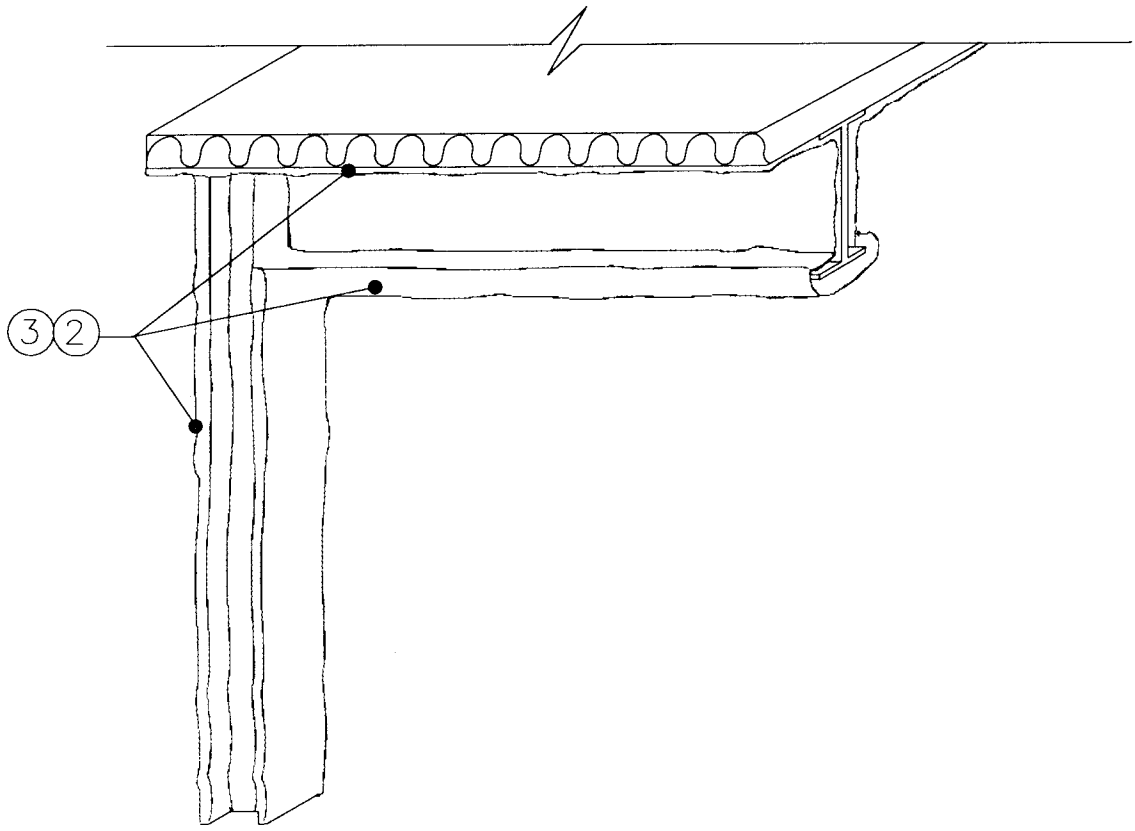

Removal of fireproofing or thermal surface insulation

1. Prepare containment area as specified on applicable sheet 2, 3, or 4.

2. Adequately wet mist surface of insulation/fireproofing with amended water, initially and during removal procedures.

3. Remove sprayed-on fireproofing from all structural members. Brush, HEPA vacuum, and wet wipe exposed steel surfaces in order to remove residual material. Place removed asbestos-containing material in approved containers; see sheet 9. Apply labels; see sheet 14.

4. Inspect and reclean area as necessary.

5. Apply tinted penetrating encapsulant. Inspect and reapply encapsulant as necessary.

6. Prepare area for final air clearance.

7. Carry out final clearance requirements as specified on applicable sheet 16, 17, or 18.

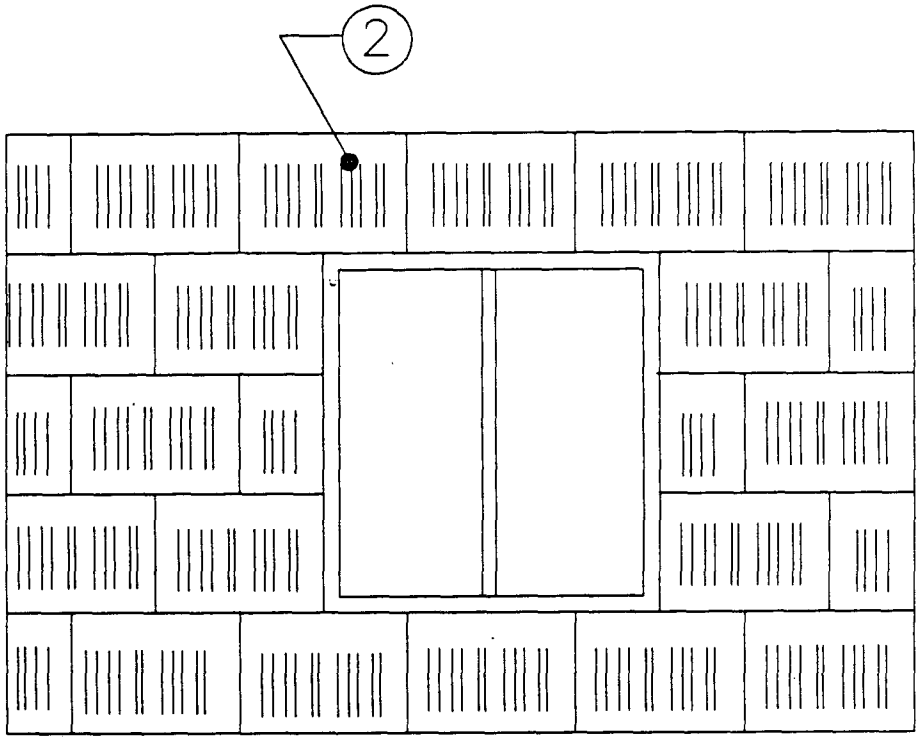

Removal of asbestos cement siding

1. No containment area is required. Establish boundaries of asbestos-regulated work area so that unauthorized entry is prevented; see sheet 11. Provide personal protection and decontamination facilities as specified in contractor's asbestos hazard abatement plan.

2. Wet mist siding with amended water, initially and during removal procedures.

3. Anchor 10-mil polyethylene sheeting below work area. Remove siding in a manner that will prevent crumbling, pulverizing, or reducing to powder during the removal procedure. NOTE: Normal breakage does not constitute crumbling, pulverizing, or reducing to powder.

4. Clean and HEPA vacuum all surfaces.

5. Inspect and reclean area as necessary.

6. Place all materials in Dumpster or other transport container lined with two layers of 6-mil polyethylene. Seal the joints and ends of each layer with duct tape; see sheet 9. Apply labels; see sheet 14. Other containers may be used; see sheet 9. Apply labels; see sheet 14.

7. Prepare area for final clearance.

8. Contractor and contracting officer will certify visual inspection of work area on sheet 19, *Certification of Final Cleaning and Visual Inspection*.

NOTE: THIS SHEET CAN BE USED FOR PIPE FITTINGS AND FOR VERTICAL OR HORIZONTAL PIPING.

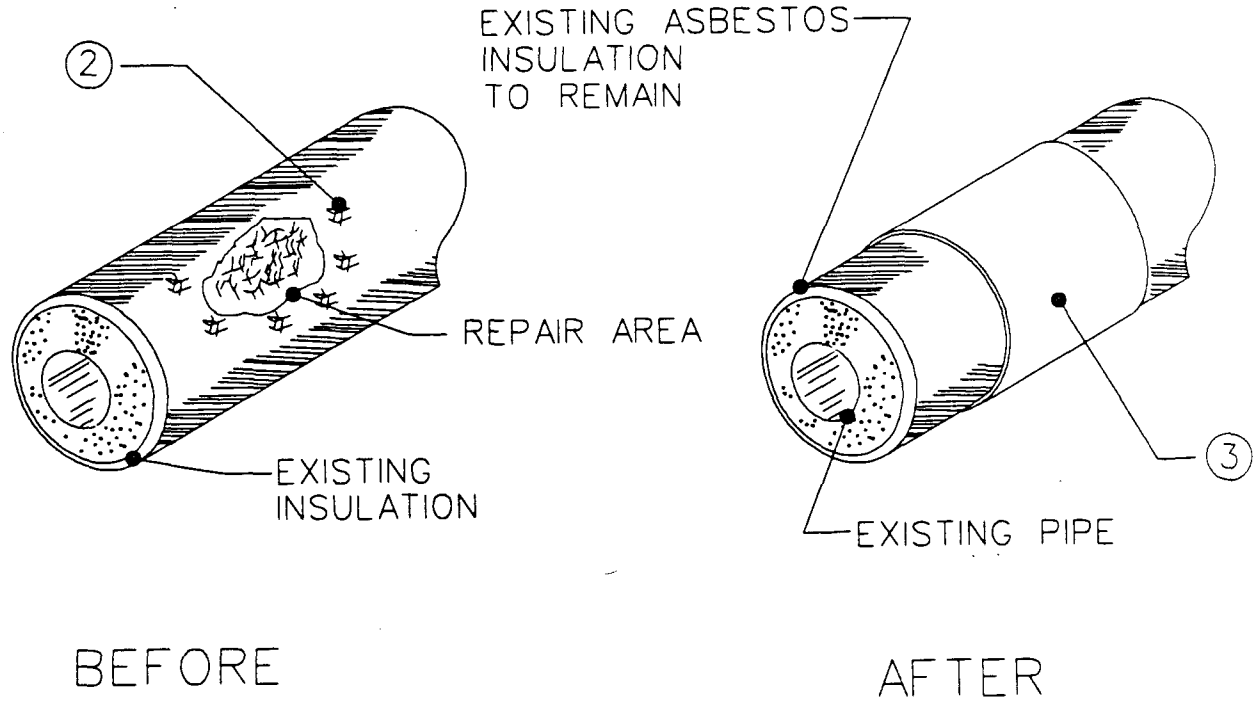

Repair of pipe and fitting insulation (using glove bag)

1. Install glove bag as specified on sheet 10. Prepare modified containment area as specified on sheet 21. Adequately wet mist insulation surface with amended water.

2. Remove any loose material in the repair area with a HEPA vacuum. Fill voids with mineral wool insulating cement.

3. Cover filled areas with a nonwoven fiberglass cloth saturated with a bridging encapsulant. Extend cloth a minimum of 6 inches beyond edge of damaged areas. Allow area to dry for 24 hours. Coat area with a second layer of tinted bridging encapsulant.

4. Inspect and reapply encapsulant as necessary.

5. Prepare area for final clearance.

6. Carry out final clearance requirements specified on sheets 10 and 21.

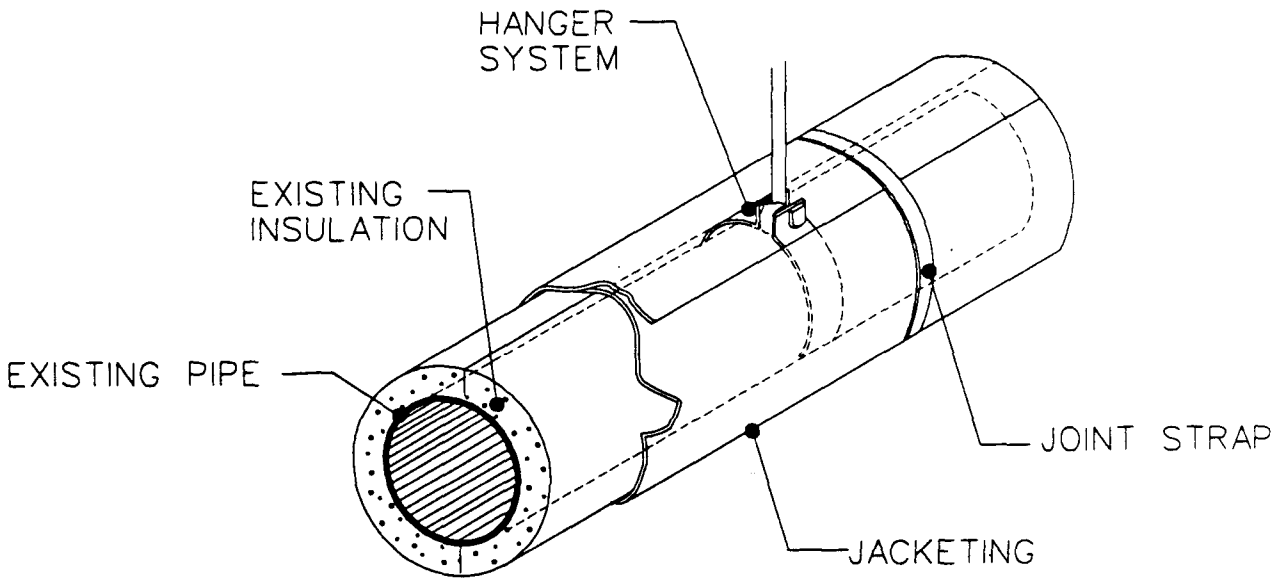

NOTE: THIS SHEET CAN BE USED FOR VERTICAL OR HORIZONTAL PIPING.

Removal of pipe insulation (using glove bag)

1. Install glove bag as specified on sheet 10. Prepare modified containment area as specified on sheet 21. Adequately wet mist insulation surface with amended water, initially and during removal.

2. Remove jacketing and asbestos pipe insulation from pipe and hanger to within 2 inches of inside edges of glove bag.

3. Clean exposed surfaces by spraying with amended water and brushing.

4. Inspect and reclean as necessary.

5. Spray a tinted penetrating encapsulant on pipe and exposed ends of insulation.

6. Inspect piping and reapply encapsulant as necessary.

7. Prepare area for final air clearance.

8. Carry out final clearance requirements specified on sheets 10 and 21.

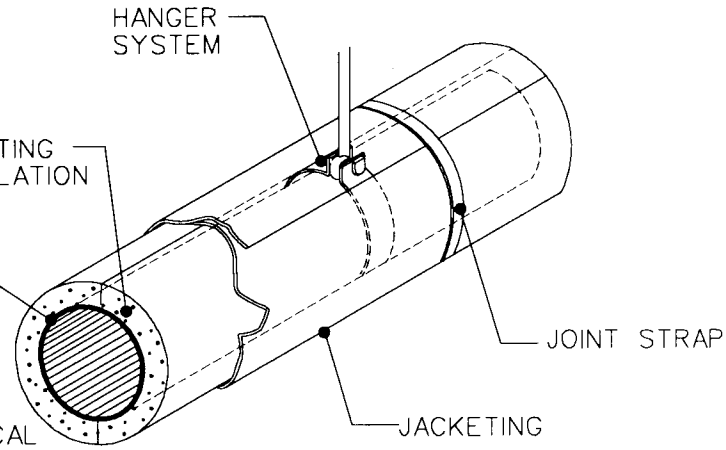

NOTE: THIS SHEET CAN BE USED FOR PIPE FITTINGS AND FOR VERTICAL OR HORIZONTAL PIPING.

Removal of horizontal pipe insulation (using containment area)

1. Prepare containment area as specified on applicable sheet 2, 3, or 4.

2. Adequately wet mist insulation surface with amended water, initially and during removal. Remove jacketing and insulation from pipe and hanger system.

3. Clean exposed surfaces by spraying with amended water and brushing.

4. Inspect and reclean as necessary.

5. Spray a tinted penetrating encapsulant on pipe and exposed ends of insulation.

6. Inspect piping and reapply encapsulant as necessary.

7. Prepare area for final air clearance.

8. Carry out final clearance requirements specified on applicable sheet 16, 17, or 18.

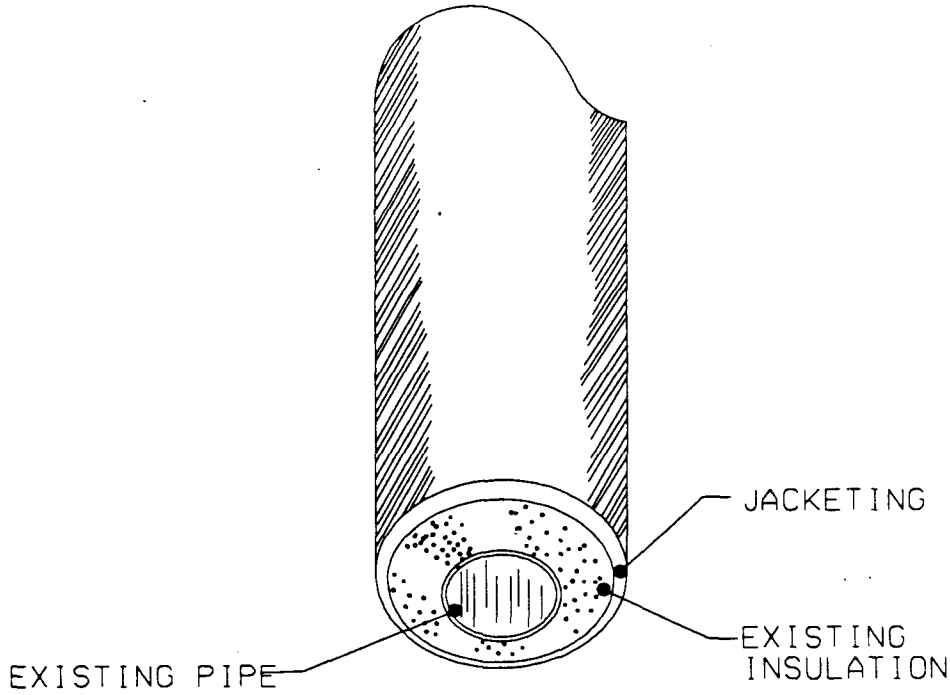

Removal of pipe insulation (using mini-containment area)

1. Prepare mini-containment area as specified on sheet 7.

2. Adequately wet mist insulation surface with amended water, initially and during removal. Remove jacketing and insulation from pipe and hanger system.

3. Clean exposed surfaces by spraying with amended water and brushing.

4. Inspect and reclean area as necessary.

5. Spray a tinted penetrating encapsulant on pipe and exposed ends of insulation. Inspect and reapply as necessary.

6. Prepare area for final clearance.

7. Carry out final clearance requirements specified on sheet 7.

This page was intentionally left blank for duplex printing.

SECTION TABLE OF CONTENTS

DIVISION 13 - SPECIAL CONSTRUCTION

13286N

HANDLING OF LIGHTING BALLASTS AND LAMPS CONTAINING PCBs AND MERCURY

01/01

PART 1 GENERAL

1.1 REFERENCES
1.2 REQUIREMENTS
1.3 DEFINITIONS
1.3.1 Certified Industrial Hygienist (CIH)
1.3.2 Leak
1.3.3 Lamps
1.3.4 Polychlorinated Biphenyls (PCBs)
1.3.5 Spill
1.3.6 Universal Waste
1.4 QUALITY ASSURANCE
1.4.1 Regulatory Requirements
1.4.2 Training
1.4.3 Regulation Documents
1.5 SUBMITTALS
1.6 ENVIRONMENTAL REQUIREMENTS
1.7 SCHEDULING
1.8 QUALITY ASSURANCE
1.8.1 Qualifications of CIH
1.8.2 PCB and Lamp Removal Work Plan
1.8.3 PCB and Lamp Disposal Plan

PART 2 PRODUCTS

PART 3 EXECUTION

3.1 WORK PROCEDURE
3.1.1 Work Operations
3.2 PCB SPILL CLEANUP REQUIREMENTS
3.2.1 PCB Spills
3.2.2 PCB Spill Control Area
3.2.3 PCB Spill Cleanup
3.2.4 Records and Certification
3.3 REMOVAL
3.3.1 Ballasts
3.3.2 Lighting Lamps
3.4 STORAGE FOR DISPOSAL
3.4.1 Storage Containers for PCBs
3.4.2 Storage Containers for lamps
3.4.3 Labeling of Waste Containers
3.5 DISPOSAL
3.5.1 Identification Number
3.5.2 Transporter Certification
3.5.2.1 Certificate of Disposal and/or Recycling

3.5.3 Disposal by the Contractor
3.5.3.1 NOT USED
3.5.3.2 DD Form 1348-1

-- End of Section Table of Contents --

13286N

HANDLING OF LIGHTING BALLASTS AND LAMPS CONTAINING PCBs AND MERCURY
01/01

PART 1 GENERAL

1.1 REFERENCES

The publications listed below form a part of this specification to the extent referenced. The publications are referred to within the text by the basic designation only.

U.S. NATIONAL ARCHIVES AND RECORDS ADMINISTRATION (NARA)

29 CFR 1910.1000	Air Contaminants
40 CFR 260	Hazardous Waste Management System: General
40 CFR 261	Identification and Listing of Hazardous Waste
40 CFR 262	Generators of Hazardous Waste
40 CFR 263	Transporters of Hazardous Waste
40 CFR 264	Standards for Owners and Operators of Hazardous Waste Treatment, Storage and Disposal Facilities
40 CFR 265	Interim Status Standards for Owners and Operators of Hazardous Waste Treatment, Storage and Disposal Facilities
40 CFR 268	Land Disposal Restrictions
40 CFR 270	EPA Administered Permit Programs: The Hazardous Waste Program
40 CFR 273	Standards For Universal Waste Management
40 CFR 761	Polychlorinated Biphenyls (PCBs) Manufacturing, Processing, Distribution in Commerce, and Use Prohibitions
49 CFR 178	Shipping Container Specification

1.2 REQUIREMENTS

Removal and disposal of PCB containing lighting ballasts and associated mercury-containing lamps. Contractor may encounter leaking PCB ballasts.

1.3 DEFINITIONS

1.3.1 Certified Industrial Hygienist (CIH)

A industrial hygienist hired by the contractor shall be certified by the American Board of Industrial Hygiene.

1.3.2 Leak

Leak or leaking means any instance in which a PCB article, PCB container, or PCB equipment has any PCBs on any portion of its external surface.

1.3.3 Lamps

Lamp, also referred to as "universal waste lamp", is defined as the bulb or tube portion of an electric lighting device. A lamp is specifically designed to produce radiant energy, most often in the ultraviolet, visible, and infra-red regions of the electromagnetic spectrum. Examples of common universal waste electric lamps include, but are not limited to, fluorescent, high intensity discharge, neon, mercury vapor, high pressure sodium, and metal halide lamps.

1.3.4 Polychlorinated Biphenyls (PCBs)

PCBs as used in this specification shall mean the same as PCBs, PCB containing lighting ballast, and PCB container, as defined in 40 CFR 761, Section 3, Definitions.

1.3.5 Spill

Spill means both intentional and unintentional spills, leaks, and other uncontrolled discharges when the release results in any quantity of PCBs running off or about to run off the external surface of the equipment or other PCB source, as well as the contamination resulting from those releases.

1.3.6 Universal Waste

Universal Waste means any of the following hazardous wastes that are managed under the universal waste requirements 40 CFR 273:

(1) Batteries as described in Sec. 273.2 of this chapter;
(2) Pesticides as described in Sec. 273.3 of this chapter;
(3) Thermostats as described in Sec. 273.4 of this chapter; and
(4) Lamps as described in Sec. 273.5 of this chapter.

1.4 QUALITY ASSURANCE

1.4.1 Regulatory Requirements

Perform PCB related work in accordance with 40 CFR 761. Perform mercury-containing lamps storage and transport in accordance with 40 CFR 261, 40 CFR 264, 40 CFR 265, 40 CFR 273

1.4.2 Training

Certified industrial hygienist (CIH) shall instruct and certify the training of all persons involved in the removal of PCB containing lighting ballasts and mercury-containing lamps. The instruction shall include: The dangers of PCB and mercury exposure, decontamination, safe work practices, and applicable OSHA and EPA regulations. The CIH shall review and approve the PCB and Mercury-Containing Lamp Removal Work Plans.

1.4.3 Regulation Documents

Maintain at all times one copy each at the office and one copy each in view at the job site of 29 CFR 1910.1000, 40 CFR 260, 40 CFR 261, 40 CFR 262, 40 CFR 263, 40 CFR 265, 40 CFR 268, 40 CFR 270, 40 CFR 273 and of the Contractor removal work plan and disposal plan for PCB and for associated mercury-containing lamps.

1.5 SUBMITTALS

Submit the following in accordance with Section 01330, "Submittal Procedures."

SD-07 Certificates

Qualifications of CIH; G-AO

Training Certification; G-AO

PCB and Lamp Removal Work Plan; G-AO

PCB and Lamp Disposal Plan; G-AO

SD-11 Closeout Submittals

Transporter certification; G

Transporter certification of notification to EPA of their PCB waste activities and EPA ID numbers;

Certification of Decontamination

Certificate of Disposal and/or recycling.

Submit to the Government before application for payment within 30 days of the date that the disposal of the PCB and mercury-containing lamp waste identified on the manifest was completed.

DD Form 1348-1

Testing results

1.6 ENVIRONMENTAL REQUIREMENTS

Use special clothing:

a. Disposable gloves (polyethylene)

b. Eye protection

c. PPE as required by CIH

1.7 SCHEDULING

Notify the Contracting Officer 20 days prior to the start of PCB and mercury-containing lamp removal work.

1.8 QUALITY ASSURANCE

1.8.1 Qualifications of CIH

Submit the name, address, and telephone number of the Industrial Hygienist selected to perform the duties in paragraph entitled "Certified Industrial Hygienist." Submit training certification that the Industrial Hygienist is certified, including certification number and date of certification or re certification.

1.8.2 PCB and Lamp Removal Work Plan

Submit a job-specific plan within 20 calendar days after award of contract of the work procedures to be used in the removal, packaging, and storage of PCB-containing lighting ballasts and associated mercury-containing lamps. Include in the plan: Requirements for Personal Protective Equipment (PPE), spill cleanup procedures and equipment, eating, smoking and restroom procedures. The plan shall be approved and signed by the Certified Industrial Hygienist. Obtain approval of the plan by the Contracting Officer prior to the start of PCB and/or lamp removal work.

1.8.3 PCB and Lamp Disposal Plan

Submit a PCB and lamp Disposal Plan with 45 calendar days after award of contract. The PCB and Lamp Disposal Plan shall comply with applicable requirements of federal, state, and local PCB and Universal waste regulations and address:

a. Estimated quantities of wastes to be generated, disposed of, and recycled.

b. Names and qualifications of each Contractor that will be transporting, storing, treating, and disposing of the wastes. Include the facility location. Furnish two copies of EPA and state PCB and mercury-containing lamp waste permit applications and EPA identification numbers, as required.

c. Names and qualifications (experience and training) of personnel who will be working on-site with PCB and mercury-containing lamp wastes.

d. Spill prevention, containment, and cleanup contingency measures to be implemented.

e. Work plan and schedule for PCB and mercury-containing lamp waste removal, containment, storage, transportation, disposal and or recycling. Wastes shall be cleaned up and containerize daily.

PART 2 PRODUCTS

Not used.

PART 3 EXECUTION

3.1 WORK PROCEDURE

Furnish labor, materials, services, and equipment necessary for the removal of PCB containing lighting ballasts, associated mercury-containing fluorescent lamps, and high intensity discharge (HID) lampsin accordance with local, state, or federal regulations. Do not expose PCBs to open flames or other high temperature sources since toxic decomposition

by-products may be produced. Do not brake mercury containing fluorescent lamps or high intensity discharge lamps.

3.1.1 Work Operations

Ensure that work operations or processes involving PCB or PCB-contaminated materials are conducted in accordance with 40 CFR 761, 40 CFR 262 40 CFR 263, and the applicable requirements of this section, including but not limited to:

a. Obtaining suitable PCB and mercury-containing lamp storage sites.

b. Notifying Contracting Officer prior to commencing the operation.

c. Reporting leaks and spills to the Contracting Officer.

d. Cleaning up spills.

e. Inspecting PCB and PCB-contaminated items and waste containers for leaks and forwarding copies of inspection reports to the Contracting Officer.

f. Maintaining inspection, inventory and spill records.

3.2 PCB SPILL CLEANUP REQUIREMENTS

3.2.1 PCB Spills

Immediately report to the Contracting Officer any PCB spills.

3.2.2 PCB Spill Control Area

Rope off an area around the edges of a PCB leak or spill and post a "PCB Spill Authorized Personnel Only" caution sign. Immediately transfer leaking items to a drip pan or other container.

3.2.3 PCB Spill Cleanup

40 CFR 761, subpart G. Initiate cleanup of spills as soon as possible, but no later than 24 hours of its discovery. Mop up the liquid with rags or other conventional absorbent. The spent absorbent shall be properly contained and disposed of as solid PCB waste.

3.2.4 Records and Certification

Document the cleanup with records of decontamination in accordance with 40 CFR 761, Section 125, Requirements for PCB Spill Cleanup. Provide test results of cleanup and certification of decontamination.

3.3 REMOVAL

3.3.1 Ballasts

As ballast are removed from the lighting fixture, inspect label on ballast. Ballasts without a "No PCB" label shall be assumed to contain PCBs and containerized and disposed of as required under paragraphs STORAGE FOR DISPOSAL and DISPOSAL. If there are less than 1600 "No PCB" labeled lighting ballasts dispose of them as normal demolition debris.

3.3.2 Lighting Lamps

Remove lighting tubes/lamps from the lighting fixture and carefully place (unbroken) into appropriate containers (original transport boxes or equivalent). In the event of a lighting tube/lamp braking, sweep and place waste in double plastic taped bags and dispose of as universal waste as specified herein.

3.4 STORAGE FOR DISPOSAL

3.4.1 Storage Containers for PCBs

49 CFR 178. Store PCB in containers approved by DOT for PCB.

3.4.2 Storage Containers for lamps

Store mercury containing lamps in appropriate DOT containers. The boxes shall be stored and labeled for transport in accordance with 40 CFR 273.

3.4.3 Labeling of Waste Containers

Label with the following:

a. Date the item was placed in storage and the name of the cognizant activity/building.

b. "Caution Contains PCB," conforming to 40 CFR 761, CFR Subpart C. Affix labels to PCB waste containers.

c. Label mercury-containing lamp waste in accordance with 40 CFR 273. Affix labels to all lighting waste containers.

3.5 DISPOSAL

Dispose of off Government property in accordance with EPA, DOT, and local regulations at a permitted site.

3.5.1 Identification Number

Federal regulations 40 CFR 761, and 40 CFR 263 require that generators, transporters, commercial storers, and disposers of PCB waste posses U.S. EPA identification numbers. The contractor shall verify that the activity has a U.S. EPA generator identification number for use on the Uniform Hazardous Waste manifest. If not, the contractor shall advise the activity that it must file and obtain an I.D. number with EPA prior to commencement of removal work. For mercury containing lamp removal, Federal regulations 40 CFR 273 require that large quantity handlers of Universal waste (LQHUW) must provide notification of universal waste management to the appropriate EPA Region (or state director in authorized states), obtain an EPA identification number, and retain for three years records of off-site shipments of universal waste. The contractor shall verify that the activity has a U.S. EPA generator identification number for use on the Universal Waste manifest. If not, the contractor shall advise the activity that it must file and obtain an I.D. number with EPA prior to commencement of removal work.

3.5.2 Transporter Certification

Comply with disposal and transportation requirements outlined in 40 CFR 761

and 40 CFR 263. Before transporting the PCB waste, sign and date the manifest acknowledging acceptance of the PCB waste from the Government. Return a signed copy to the Government before leaving the job site. Ensure that the manifest accompanies the PCB waste at all times. Submit transporter certification of notification to EPA of their PCB waste activities (EPA Form 7710-53).

3.5.2.1 Certificate of Disposal and/or Recycling

40 CFR 761. Certificate for the PCBs and PCB items disposed shall include:

a. The identity of the disposal and or recycling facility, by name, address, and EPA identification number.

b. The identity of the PCB waste affected by the Certificate of Disposal including reference to the manifest number for the shipment.

c. A statement certifying the fact of disposal and or recycling of the identified PCB waste, including the date(s) of disposal, and identifying the disposal process used.

d. A certification as defined in 40 CFR 761.

3.5.3 Disposal by the Contractor

Comply with disposal and transportation requirements outlined in 40 CFR 761 and 40 CFR 263. Load and haul PCBs to an approved storage site.

3.5.3.1 NOT USED

3.5.3.2 DD Form 1348-1

Prepare DD Form 1348-1 Turn-in Document (TID), which will accompany the PCB to the storage site. Ensure that a responsible person from the activity that owns the PCB signs the DD Form 1348-1.

-- End of Section --

This page was intentionally left blank for duplex printing.

SECTION TABLE OF CONTENTS

DIVISION 13 - SPECIAL CONSTRUCTION

SECTION 13851

FIRE DETECTION AND ALARM SYSTEM, ADDRESSABLE

08/98

PART 1 GENERAL

1.1 REFERENCES
1.2 GENERAL REQUIREMENTS
1.2.1 Standard Products
1.2.2 Nameplates
1.2.3 Keys and Locks
1.2.4 Tags
1.2.5 Verification of Dimensions
1.2.6 Compliance
1.2.7 Qualifications
1.2.7.1 Engineer and Technician
1.2.7.2 Installer
1.2.7.3 Design Services
1.3 SYSTEM DESIGN
1.3.1 Operation
1.3.2 Operational Features
1.3.3 Alarm Functions
1.3.4 Primary Power
1.3.5 Battery Backup Power
1.3.6 Interface With other Equipment
1.4 TECHNICAL DATA AND COMPUTER SOFTWARE
1.5 SUBMITTALS
1.6 DELIVERY AND STORAGE

PART 2 PRODUCTS

2.1 CONTROL PANEL
2.1.1 Not Used
2.1.2 Circuit Connections
2.1.3 System Expansion and Modification Capabilities
2.1.4 Addressable Control Module
2.1.5 Addressable Initiating Device Circuits Module
2.2 STORAGE BATTERIES
2.3 BATTERY CHARGER
2.4 ADDRESSABLE MANUAL FIRE ALARM STATIONS
2.5 FIRE DETECTING DEVICES
2.5.1 Heat Detectors
2.5.1.1 Combination Fixed-Temperature and Rate-of-Rise Detectors
2.5.2 Smoke Detectors
2.5.2.1 Photoelectric Detectors
2.5.2.2 Not Used
2.5.2.3 Not Used
2.6 NOTIFICATION APPLIANCES
2.6.1 Alarm Horns
2.6.2 Visual Notification Appliances

2.6.3 Combination Audible/Visual Notification Appliances
2.7 FIRE DETECTION AND ALARM SYSTEM PERIPHERAL EQUIPMENT
2.7.1 Not Used
2.7.2 Conduit
2.7.3 Wiring
2.7.4 Special Tools and Spare Parts
2.8 Not Used

PART 3 EXECUTION

3.1 INSTALLATION
3.1.1 Power Supply for the System
3.1.2 Wiring
3.1.3 Control Panel
3.1.4 Detectors
3.1.5 Notification Appliances
3.1.6 Annunciator Equipment
3.1.7 Addressable Initiating Device Circuits Module
3.2 OVERVOLTAGE AND SURGE PROTECTION
3.2.1 Power Line Surge Protection
3.2.2 Low Voltage DC Circuits Surge Protection
3.2.3 Signal Line Circuit Surge Protection
3.3 GROUNDING
3.4 SUPERVISING STATION PROVISIONS
3.5 TESTING
3.5.1 Preliminary Tests
3.5.2 Acceptance Test
3.6 TRAINING

-- End of Section Table of Contents --

SECTION 13851

FIRE DETECTION AND ALARM SYSTEM, ADDRESSABLE
08/98

PART 1 GENERAL

1.1 REFERENCES

The publications listed below form a part of this specification to the extent referenced. The publications are referred to in the text by basic designation only.

AMERICAN NATIONAL STANDARDS INSTITUTE (ANSI)

ANSI S3.41	(1990) Audible Emergency Evacuation Signals

INSTITUTE OF ELECTRICAL AND ELECTRONICS ENGINEERS (IEEE)

IEEE C62.41	(1991) Surge Voltages in Low-Voltage AC Power Circuits

NATIONAL FIRE PROTECTION ASSOCIATION (NFPA)

NFPA 70	(1996) National Electrical Code
NFPA 72	(1996) National Fire Alarm Code
NFPA 90A	(1996) Installation of Air Conditioning and Ventilating Systems

UNDERWRITERS LABORATORIES (UL)

UL 6	(1997) Rigid Metal Conduit
UL 38	(1994; Rev Jan 1994) Manually Actuated Signaling Boxes for Use with Fire-Protective Signaling Systems
UL 268	(1996) Smoke Detectors for Fire Protective Signaling Systems
UL 268A	(1993; Rev thru May 1997) Smoke Detectors for Duct Applications
UL 464	(1996) Audible Signal Appliances
UL 521	(1993; Rev Oct 1994) Heat Detectors for Fire Protective Signaling Systems
UL 797	(1993; Rev thru Mar 1997) Electrical Metallic Tubing
UL 864	(1991; Rev thru May 1994) Control Units for Fire-Protective Signaling Systems

UL 1242	(1996) Intermediate Metal Conduit
UL 1971	(1995; Rev thru May 1997) Signaling Devices for the Hearing Impaired

1.2 GENERAL REQUIREMENTS

1.2.1 Standard Products

Material and equipment shall be manufactured by notifier and shall be the same model numbers used in the phase II building. Equipment shall be supported by a service organization that can provide service within 24 hours of notification.

1.2.2 Nameplates

Major components of equipment shall have the manufacturer's name, address, type or style, voltage and current rating, and catalog number on a noncorrosive and nonheat-sensitive plate which is securely attached to the equipment.

1.2.3 Keys and Locks

Locks shall be keyed alike. Four keys for the system shall be provided.

1.2.4 Tags

Tags with stamped identification number shall be furnished for keys and locks.

1.2.5 Verification of Dimensions

After becoming familiar with details of the work, the Contractor shall verify dimensions in the field and shall advise the Contracting Officer of any discrepancy before performing the work.

1.2.6 Compliance

The fire detection and alarm system and the central reporting system shall be configured in accordance with NFPA 72. The equipment furnished shall be compatible and be UL listed, FM approved, or approved or listed by a nationally recognized testing laboratory in accordance with the applicable NFPA standards.

1.2.7 Qualifications

1.2.7.1 Engineer and Technician

a. Registered Professional Engineer with verification of experience and at least 4 years of current experience in the design of the fire protection and detection systems.

1.2.7.2 Installer

A Fire Alarm Technician with a minimum of 4 years of experience shall perform/supervise the installation of the fire alarm system. Fire Alarm Technicians with a minimum of 2 years of experience shall be utilized to assist in the installation and terminate fire alarm devices, cabinets and panels. An electrician shall be allowed to install wire or cable and to

install conduit for the fire alarm system. The Fire Alarm technicians installing the equipment shall be factory trained in the installation, adjustment, testing, and operation of the equipment specified herein and on the drawings.

1.2.7.3 Design Services

Installations requiring designs or modifications of fire detection, fire alarm, or fire suppression systems shall require the services and review of a qualified fire protection engineer. For the purposes of meeting this requirement, a qualified fire protection engineer is defined as an individual meeting one of the following conditions:

a. A registered PE in a related engineering discipline and member grade status in the National Society of Fire Protection Engineers.

1.3 SYSTEM DESIGN

1.3.1 Operation

The fire alarm and detection system shall be a complete, supervised fire alarm system. The system shall be activated into the alarm mode by actuation of any alarm initiating device. The system shall remain in the alarm mode until the initiating device is reset and the fire alarm control panel is reset and restored to normal. Alarm initiating devices shall be connected to initiating device circuits (IDC), Style B, to signal line circuits (SLC), Style 6, in accordance with NFPA 72. Alarm notification appliances shall be connected to notification appliance circuits (NAC), Style Z in accordance with NFPA 72. A looped conduit system shall be provided so that if the conduit and all conductors within are severed at any point, all IDC, NAC and SLC will remain functional. The conduit loop requirement is not applicable to the signal transmission link from the local panels (at the protected premises) to the Supervising Station (fire station, fire alarm central communication center). Textual, audible, and visual appliances and systems shall comply with NFPA 72. Fire alarm system components requiring power, except for the control panel power supply, shall operate on 24 Volts dc. Addressable system shall be microcomputer (microprocessor or microcontroller) based with a minimum word size of eight bits and shall provide the following features:

a. Sufficient memory to perform as specified and as shown for addressable system.

b. Individual identity of each addressable device for the following conditions: alarm; trouble; open; short; and appliances missing/failed remote detector - sensitivity adjustment from the panel for smoke detectors

c. Capability of each addressable device being individually disabled or enabled from the panel.

d. Each SLC shall be sized to provide 40 percent addressable expansion without hardware modifications to the panel.

1.3.2 Operational Features

The system shall have the following operating features:

a. Monitor electrical supervision of IDC, SLC, and NAC. Smoke

detectors shall have combined alarm initiating and power circuits.

b. Monitor electrical supervision of the primary power (ac) supply, battery voltage, placement of alarm zone module (card, PC board) within the control panel, and transmitter tripping circuit integrity.

c. A trouble buzzer and trouble LED/LCD (light emitting diode/liquid crystal diode) to activate upon a single break, open, or ground fault condition which prevents the required normal operation of the system. The trouble signal shall also operate upon loss of primary power (ac) supply, low battery voltage, removal of alarm zone module (card, PC board), and disconnection of the circuit used for transmitting alarm signals off-premises. A trouble alarm silence switch shall be provided which will silence the trouble buzzer, but will not extinguish the trouble indicator LED/LCD. Subsequent trouble and supervisory alarms shall sound the trouble signal until silenced. After the system returns to normal operating conditions, the trouble buzzer shall again sound until the silencing switch returns to normal position, unless automatic trouble reset is provided.

d. A one person test mode. Activating an initiating device in this mode will activate an alarm for a short period of time, then automatically reset the alarm, without activating the transmitter during the entire process.

e. A transmitter disconnect switch to allow testing and maintenance of the system without activating the transmitter but providing a trouble signal when disconnected and a restoration signal when reconnected.

f. Evacuation alarm silencing switch which, when activated, will silence alarm devices, but will not affect the zone indicating LED/LCD nor the operation of the transmitter. This switch shall be over-ridden upon activation of a subsequent alarm from an unalarmed device and the NAC devices will be activated.

g. Electrical supervision for circuits used for supervisory signal services (i.e., sprinkler systems, valves, etc.). Supervision shall detect any open, short, or ground.

h. Confirmation or verification of all smoke detectors. The control panel shall interrupt the transmission of an alarm signal to the system control panel for a factory preset period. This interruption period shall be adjustable from 1 to 60 seconds and be factory set at 20 seconds. Immediately following the interruption period, a confirmation period shall be in effect during which time an alarm signal, if present, will be sent immediately to the control panel. Fire alarm devices other than smoke detectors shall be programmed without confirmation or verification.

i. The fire alarm control panel shall provide supervised addressable relays for HVAC shutdown. An override at the HVAC panel shall not be provided.

j. Provide one person test mode - Activating an initiating device in this mode will activate an alarm for a short period of time, then

automatically reset the alarm, without activating the transmitter during the entire process.

k. The fire alarm control panel shall provide the required monitoring and supervised control outputs needed to accomplish elevator recall.

l. The fire alarm control panel shall monitor the fire sprinkler system, or other fire protection extinguishing system.

m. The control panel and field panels shall be software reprogrammable to enable expansion or modification of the system without replacement of hardware or firmware. Examples of required changes are: adding or deleting devices or zones; changing system responses to particular input signals; programming certain input signals to activate auxiliary devices.

n. Zones shall be arranged as indicated on the contract drawings.

1.3.3 Alarm Functions

An alarm condition on a circuit shall automatically initiate the following functions:

a. Transmission of signals over the station radio fire reporting system. The signal shall correspond with the zones as indicated above.

b. Visual indications of the alarmed devices on the fire alarm control panel display and on the remote audible/visual display.

c. Continuous sounding or operation of alarm notification appliances throughout the building as required by ANSI S3.41.

d. Closure of doors held open by electromagnetic devices.

e. Operation of the smoke control system.

f. Deactivation of the air handling units as specified by HVAC Engineer.

1.3.4 Primary Power

Operating power shall be provided as required by paragraph Power Supply for the System. Transfer from normal to emergency power or restoration from emergency to normal power shall be fully automatic and not cause transmission of a false alarm. Loss of ac power shall not prevent transmission of a signal via the fire reporting system upon operation of any initiating circuit.

1.3.5 Battery Backup Power

Battery backup power shall be through use of rechargeable, sealed-type storage batteries and battery charger.

1.3.6 Interface With other Equipment

Interfacing components shall be furnished as required to connect to subsystems or devices which interact with the fire alarm system, such as

supervisory or alarm contacts in suppression systems, operating interfaces for smoke control systems, door releases, etc.

1.4 TECHNICAL DATA AND COMPUTER SOFTWARE

Technical data and computer software (meaning technical data which relates to computer software) which is specifically identified in this project, and which may be defined/required in other specifications, shall be delivered, strictly in accordance with the CONTRACT CLAUSES, and in accordance with the Contract Data Requirements List, DD Form 1423. Data delivered shall be identified by reference to the particular specification paragraph against which it is furnished. Data to be submitted shall include complete system, equipment, and software descriptions. Descriptions shall show how the equipment will operate as a system to meet the performance requirements of this contract. The data package shall also include the following:

(1) Identification of programmable portions of system equipment and capabilities.

(2) Description of system revision and expansion capabilities and methods of implementation detailing both equipment and software requirements.

(3) Provision of operational software data on all modes of programmable portions of the fire alarm and detection system.

(4) Description of Fire Alarm Control Panel equipment operation.

(5) Description of auxiliary and remote equipment operations.

(6) Library of application software.

(7) Operation and maintenance manuals as specified in SD-19 of the Submittals paragraph.

1.5 SUBMITTALS

Government approval is required for submittals with a "GA" designation; submittals having an "FI0" designation are for information only. The following shall be submitted in accordance with Section 01330 SUBMITTAL PROCEDURES:

SD-01 Data

Storage Batteries; GA.

Substantiating battery calculations for supervisory and alarm power requirements. Ampere-hour requirements for each system component and each panel component, and the battery recharging period shall be included.

Voltage Drop; GA.

Voltage drop calculations for notification appliance circuits to indicate that sufficient voltage is available for proper appliance operation.

Spare Parts;] GA.

Spare parts data for each different item of material and equipment specified, not later than 3 months prior to the date of beneficial

occupancy. Data shall include a complete list of parts and supplies with the current unit prices and source of supply and a list of the parts recommended by the manufacturer to be replaced after 1 year of service.

Technical Data and Computer Software; GA.

Technical data which relates to computer software.

SD-04 Drawings

Fire Alarm Reporting System; GA1.

Detail drawings, prepared and signed by a Registered Professional Engineer or a NICET Level 3 Fire Alarm Technician, consisting of a complete list of equipment and material, including manufacturer's descriptive and technical literature, catalog cuts, and installation instructions. Note that the contract drawings show layouts based on typical detectors. The Contractor shall check the layout based on the actual detectors to be installed and make any necessary revisions in the detail drawings. The detail drawings shall also contain complete wiring and schematic diagrams for the equipment furnished, equipment layout, and any other details required to demonstrate that the system has been coordinated and will properly function as a unit. Detailed point-to-point wiring diagram shall be prepared and signed by a Registered Professional Engineer or a NICET Level 3 Fire Alarm Technician showing points of connection. Diagram shall include connections between system devices, appliances, control panels, supervised devices, and equipment that is activated or controlled by the panel.

SD-06 Instructions

Training; GA.

Lesson plans, operating instructions, maintenance procedures, and training data, furnished in manual format, for the training courses. The operations training shall familiarize designated government personnel with proper operation of the fire alarm system. The maintenance training course shall provide the designated government personnel adequate knowledge required to diagnose, repair, maintain, and expand functions inherent to the system.

SD-08 Statements

Testing; GA.

Detailed test procedures, prepared and signed by a Registered Professional Engineer or a NICET Level 3 Fire Alarm Technician, for the fire detection and alarm system 60 days prior to performing system tests.

SD-09 Reports

Testing; GA.

Test reports, in booklet form, showing field tests performed to prove compliance with the specified performance criteria, upon completion and testing of the installed system. Each test report shall document readings, test results and indicate the final position of controls. The Contractor shall include the NFPA 72 Certificate of Completion and NFPA 72 Inspection and Testing Form, with the appropriate test reports.

SD-13 Certificates

Equipment; GA.

Certified copies of current approvals or listings issued by an independent test lab if not listed by UL, FM or other nationally recognized testing laboratory, showing compliance with specified NFPA standards.

Qualifications; GA.

Proof of qualifications for required personnel. The installer shall submit proof of experience for the Professional Engineer, fire alarm technician, and the installing company.

SD-19 Operation and Maintenance Manuals

Technical Data and Computer Software; GA.

Six copies of operating manual outlining step-by-step procedures required for system startup, operation, and shutdown. The manual shall include the manufacturer's name, model number, service manual, parts list, and complete description of equipment and their basic operating features. [Six] copies of maintenance manual listing routine maintenance procedures, possible breakdowns and repairs, and troubleshooting guide. The manuals shall include conduit layout, equipment layout and simplified wiring, and control diagrams of the system as installed. The manuals shall include complete procedures for system revision and expansion, detailing both equipment and software requirements. Original and backup copies of all software delivered for this project shall be provided, on each type of media utilized. Manuals shall be approved prior to training.

1.6 DELIVERY AND STORAGE

Equipment delivered and placed in storage shall be stored with protection from the weather, humidity and temperature variation, dirt, dust, and any other contaminants.

PART 2 PRODUCTS

2.1 CONTROL PANEL

The fire alarm control panel is existing. Contractor shall verify that the control is expandable and meets all requirements to expand the system. Contractor shall verify that all new fire alarm system devices are compatible with the existing fire alarm control panel.

2.1.1 Not Used

2.1.2 Circuit Connections

Circuit conductors entering or leaving the panel shall be connected to screw-type terminals with each conductor and terminal marked for identification.

2.1.3 System Expansion and Modification Capabilities

Any equipment and software needed by qualified technicians to implement future changes to the fire alarm system shall be provided as part of this contract.

2.1.4 Addressable Control Module

The control module shall be capable of operating as a relay (dry contact form C) for interfacing the control panel with other systems, and to control door holders or initiate elevator fire service. The module shall be UL listed as compatible with the control panel. The indicating device or the external load being controlled shall be configured as a Style Y notification appliance circuits. The system shall be capable of supervising, audible, visual and dry contact circuits. The control module shall have both an input and output address. The supervision shall detect a short on the supervised circuit and shall prevent power from being applied to the circuit. The control model shall provide address setting means compatible with the control panel's SLC supervision and store an internal identifying code. The control module shall contain an integral LED that flashes each time the control module is polled.

2.1.5 Addressable Initiating Device Circuits Module

The initiating device being monitored shall be configured as a Style 6 initiating device circuits. The system shell be capable of defining any module as an alarm module and report alarm trouble, loss of polling, or as a supervisory module, and reporting supervisory short, supervisory open or loss of polling. The module shall be UL listed as compatible with the control panel. The monitor module shall provide address setting means compatible with the control panel's SLC supervision and store an internal identifying code. Monitor module shall contain an integral LED that flashes each time the monitor module is polled. Pull stations with a monitor module in a common backbox are not required to have an LED.

2.2 STORAGE BATTERIES

Storage batteries shall be provided and shall be 24 Vdc sealed, lead-calcium type requiring no additional water. The batteries shall have ample capacity, with primary power disconnected, to operate the fire alarm system for a period of 72 hours. Following this period of battery operation, the batteries shall have ample capacity to operate all components of the system, including all alarm signaling devices in the total alarm mode for a minimum period of 15 minutes. Batteries shall be located at the bottom of the panel. Batteries shall be provided with overcurrent protection in accordance with NFPA 72. Separate battery cabinets shall have a lockable, hinged cover similar to the fire alarm panel. The lock shall be keyed the same as the fire alarm control panel. Cabinets shall be painted to match the fire alarm control panel.

2.3 BATTERY CHARGER

Battery charger shall be completely automatic, 24 Vdc with high/low charging rate, capable of restoring the batteries from full discharge (18 Volts dc) to full charge within 48 hours. A pilot light indicating when batteries are manually placed on a high rate of charge shall be provided as part of the unit assembly, if a high rate switch is provided. Charger shall be located in control panel cabinet or in a separate battery cabinet.

2.4 ADDRESSABLE MANUAL FIRE ALARM STATIONS

Addressable manual fire alarm stations shall conform to the applicable requirements of UL 38. Manual stations shall be connected into signal line circuits. Stations shall be installed on flush mounted outlet boxes. Manual stations shall be mounted at 42 inches. Stations shall be single

action type. Stations shall be finished in red, with raised letter operating instructions of contrasting color. Stations requiring the breaking of glass or plastic panels for operation are not acceptable. Stations employing glass rods are acceptable. The use of a key or wrench shall be required to reset the station. Gravity or mercury switches are not acceptable. Switches and contacts shall be rated for the voltage and current upon which they operate. Addressable pull stations shall be capable of being field programmed, shall latch upon operation and remain latched until manually reset. Stations shall have a separate screw terminal for each conductor. Surface mounted boxes shall be matched and painted the same color as the mounting surface.

2.5 FIRE DETECTING DEVICES

Fire detecting devices shall comply with the applicable requirements of NFPA 72, NFPA 90A, UL 268, UL 268A, and UL 521. The detectors shall be provided as indicated. Detector base shall have screw terminals for making connections. No solder connections will be allowed. Detectors located in concealed locations (above ceiling, raised floors, etc.) shall have a remote visible indicator LED/LCD. Addressable fire detecting devices, except flame detectors, shall be dynamically supervised and uniquely identified in the control panel. All fire alarm initiating devices shall be individually addressable, except where indicated. Installed devices shall conform to NFPA 70 hazard classification of the area where devices are to be installed.

2.5.1 Heat Detectors

Heat detectors shall be designed for detection of fire by combination fixed temperature and rate-of-rise principle . Heat detector spacing shall be rated in accordance with UL 521. Detectors located in areas subject to moisture, exterior atmospheric conditions, or hazardous locations as defined by NFPA 70, shall be types approved for such locations. Heat detectors located in attic spaces or similar concealed spaces below the roof shall be intermediate temperature rated.

2.5.1.1 Combination Fixed-Temperature and Rate-of-Rise Detectors

Detectors shall be designed for semi-flush outlet box mounting and supported independently of wiring connections. Contacts shall be self-resetting after response to rate-of-rise principle. Under fixed temperature actuation, the detector shall have a permanent external indication which is readily visible. Detector units located in boiler rooms, showers, or other areas subject to abnormal temperature changes shall operate on fixed temperature principle only. The UL 521 test rating for the fixed temperature portion shall be 135 degrees F.. The UL 521 test rating for the Rate-of-Rise detectors shall be rated for 50 by 50 ft.

2.5.2 Smoke Detectors

Smoke detectors shall be designed for detection of abnormal smoke densities. Smoke detectors shall be photoelectric or projected beam type. Detectors shall contain a visible indicator LED/LCD that shows when the unit is in alarm condition. Detectors shall not be adversely affected by vibration or pressure. Detectors shall be the plug-in type in which the detector base contains terminals for making wiring connections. Detectors that are to be installed in concealed (above false ceilings, etc.) locations shall be provided with a remote indicator LED/LCD suitable for mounting in a finished, visible location.

2.5.2.1 Photoelectric Detectors

Detectors shall operate on a light scattering concept using an LED light source. Failure of the LED shall not cause an alarm condition. Detectors shall be factory set for sensitivity and shall require no field adjustments of any kind. Detectors shall have an obscuration rating in accordance with UL 268. Addressable smoke detectors shall be capable of having the sensitivity being remotely adjusted by the control panel.

2.5.2.2 Not Used

2.5.2.3 Not Used

2.6 NOTIFICATION APPLIANCES

Audible appliances shall conform to the applicable requirements of UL 464. Devices shall be connected into notification appliance circuits. Devices shall have a separate screw terminal for each conductor. Audible appliances shall generate a unique audible sound from other devices provided in the building and surrounding area. Surface mounted audible appliances shall be painted red. Recessed audible appliances shall be installed with a grill that is painted redwith a factory finish to match the surface to which it is mounted.

2.6.1 Alarm Horns

Horns shall be surface mounted, with the matching mounting back box recessed vibrating type suitable for use in an electrically supervised circuit. Horns shall produce a sound rating of at least 90 dBA at 10 feet. Horns used in exterior locations shall be specifically listed or approved for outdoor use and be provided with metal housing and protective grilles.

2.6.2 Visual Notification Appliances

Visual notification appliances shall conform to the applicable requirements of UL 1971 and the contract drawings. Appliances shall have clear high intensity optic lens, xenon flash tubes, and output white light. Strobe flash rate shall be between 1 to 3 flashes per second and a minimum of 75 candela. Strobe shall be [surface] [semi-flush] mounted.

2.6.3 Combination Audible/Visual Notification Appliances

Combination audible/visual notification appliances shall provide the same requirements as individual units except they shall mount as a unit in standard backboxes. Units shall be factory assembled. Any other audible notification appliance employed in the fire alarm systems shall be approved by the Contracting Officer.

2.6.4 Alarm Mini-Horns

Mini-horns shall be surface mounted, with the matching mounting back box recessed vibrating type suitable for use in an electrically supervised circuit. Mini-horns shall produce a sound rating of at least 85 dBA at 10 feet.

2.7 FIRE DETECTION AND ALARM SYSTEM PERIPHERAL EQUIPMENT

2.7.1 Not Used

2.7.2 Conduit

Conduit and fittings shall comply with NFPA 70, UL 6, UL 1242, and UL 797.

2.7.3 Wiring

Wiring for 120 Vac power shall be No. 12 AWG minimum. The SLC wiring shall be fiber optic or copper cable in accordance with the manufacturers requirements. Wiring for fire alarm dc circuits shall be No. 16 AWG minimum. Voltages shall not be mixed in any junction box, housing, or device, except those containing power supplies and control relays. Wiring shall conform to NFPA 70. System field wiring shall be solid copper and installed in metallic conduit or electrical metallic tubing, , or cable tray, except that rigid plastic conduit may be used under slab-on-grade. Conductors shall be color coded. Conductors used for the same functions shall be similarly color coded. Wiring code color shall remain uniform throughout the circuit. Pigtail or T-tap connections to initiating device circuits, supervisory alarm circuits, and notification appliance circuits are prohibited. T-tapping using screw terminal blocks is allowed for style 5 addressable systems.

2.7.4 Special Tools and Spare Parts

Software, connecting cables and proprietary equipment, necessary for the maintenance, testing, and reprogramming of the equipment shall be furnished to the Contracting Officer. Two spare fuses of each type and size required shall be furnished. Two percent of the total number of each different type of detector, but no less than two each, shall be furnished. Spare fuses shall be mounted in the fire alarm panel.

2.8 Not Used

PART 3 EXECUTION

3.1 INSTALLATION

All work shall be installed as shown and in accordance with the manufacturer's diagrams and recommendations, unless otherwise specified. Smoke detectors shall not be installed until construction is essentially complete and the building has been thoroughly cleaned.

3.1.1 Power Supply for the System

A single dedicated circuit connection for supplying power from a branch circuit to each building fire alarm system shall be provided. The power shall be supplied as shown on the drawings. The power supply shall be equipped with a locking mechanism and marked in red with the words "FIRE ALARM CIRCUIT CONTROL".

3.1.2 Wiring

Conduit size for wiring shall be in accordance with NFPA 70. Wiring for the fire alarm system shall not be installed in conduits, junction boxes, or outlet boxes with conductors of lighting and power systems. Not more than two conductors shall be installed under any device screw terminal. The wires under the screw terminal shall be straight when placed under the terminal then clamped in place under the screw terminal. The wires shall be broken and not twisted around the terminal. Circuit conductors entering

or leaving any mounting box, outlet box enclosure, or cabinet shall be connected to screw terminals with each terminal and conductor marked in accordance with the wiring diagram. Connections and splices shall be made using screw terminal blocks. The use of wire nut type connectors in the system is prohibited. Wiring within any control equipment shall be readily accessible without removing any component parts. The fire alarm equipment manufacturer's representative shall be present for the connection of wiring to the control panel.

3.1.3 Control Panel

The control panel and its assorted components shall be mounted so that no part of the enclosing cabinet is less than 12 inches nor more than 78 inches above the finished floor. Manually operable controls shall be between 36 and 42 inches above the finished floor. Panel shall be installed to comply with the requirements of UL 864.

3.1.4 Detectors

Detectors shall be located and installed in accordance with NFPA 72. Detectors shall be connected into signal line circuits or initiating device circuits as indicated on the drawings. Detectors shall be at least 12 inches from any part of any lighting fixture. Detectors shall be located at least 3 feet from diffusers of air handling systems. Each detector shall be provided with appropriate mounting hardware as required by its mounting location. Detectors which mount in open space shall be mounted directly to the end of the stubbed down rigid conduit drop. Conduit drops shall be firmly secured to minimize detector sway. Where length of conduit drop from ceiling or wall surface exceeds 3 feet, sway bracing shall be provided. Detectors installed in concealed locations (above ceiling, raised floors, etc.) shall have a remote visible indicator LED/LCD.

3.1.5 Notification Appliances

Notification appliances shall be mounted 80 inches above the finished floor or 6 inches below the ceiling, whichever is lower.

3.1.6 Annunciator Equipment

Annunciator equipment shall be mounted where indicated on the drawings.

3.1.7 Addressable Initiating Device Circuits Module

The initiating device circuits module shall be used to connect supervised conventional initiating devices (water flow switches, water pressure switches, manual fire alarm stations, high/low air pressure switches, and tamper switches). The module shall mount in an electrical box adjacent to or connected to the device it is monitoring and shall be capable of Style B supervised wiring to the initiating device. In order to maintain proper supervision, there shall be no T-taps allowed on style B lines. Addressable initiating device circuits modules shall monitor only one initiating device each. Contacts in suppression systems and other fire protection subsystems shall be connected to the fire alarm system to perform supervisory and alarm functions as specified in Section 13930 WET PIPE SPRINKLER SYSTEM, FIRE PROTECTION NFPA 72, as indicated on the drawings and as specified herein.

3.2 OVERVOLTAGE AND SURGE PROTECTION

3.2.1 Power Line Surge Protection

All equipment connected to alternating current circuits shall be protected from surges per IEEE C62.41 B3 combination waveform and NFPA 70. Fuses shall not be used for surge protection. The surge protector shall be rated for a maximum let thru voltage of 350 Volts ac (line-to-neutral) and 350 Volt ac (neutral-to-ground).

3.2.2 Low Voltage DC Circuits Surge Protection

All IDC, NAC, and communication cables/conductors, except fiber optics, shall have surge protection installed at each point where it exits or enters a building. Equipment shall be protected from surges per IEEE C62.41 B3 combination waveform and NFPA 70. The surge protector shall be rated to protect the 24 Volt dc equipment. The maximum dc clamping voltages shall be 36 V (line-to-ground) and 72 Volt dc (line-to-line).

3.2.3 Signal Line Circuit Surge Protection

All SLC cables/conductors, except fiber optics, shall have surge protection/isolation circuits installed at each point where it exits or enters a building. The circuit shall be protected from surges per IEEE C62.41 B3 combination waveform and NFPA 70. The surge protector/isolator shall be rated to protect the equipment.

3.3 GROUNDING

Grounding shall be provided by connecting to building ground system.

3.4 SUPERVISING STATION PROVISIONS

[The proprietary type Supervising Station (PSS) is located in the Base Firestation. The supervising equipment is existing and consists of the following brands and models: Monaco Enterprises D-500 Radio Alarm System.

3.5 TESTING

The Contractor shall notify the Contracting Officer at least 10 days before the preliminary and acceptance tests are to be conducted. The tests shall be performed in accordance with the approved test procedures in the presence of the Contracting Officer. The control panel manufacturer's representative shall be present to supervise tests. The Contractor shall furnish instruments and personnel required for the tests.

3.5.1 Preliminary Tests

Upon completion of the installation, the system shall be subjected to functional and operational performance tests including tests of each installed initiating and notification appliance, when required. Tests shall include the meggering of system conductors to determine that the system is free from grounded, shorted, or open circuits. The megger test shall be conducted prior to the installation of fire alarm equipment. If deficiencies are found, corrections shall be made and the system shall be retested to assure that it is functional. After completing the preliminary testing the Contractor shall complete and submit the NFPA 72, Certificate of Completion.

3.5.2 Acceptance Test

Acceptance testing shall not be performed until the Contractor has completed and submitted the Certificate of Completion. Testing shall be in accordance with NFPA 72. The recommended tests in NFPA 72 shall be considered mandatory and shall verify that previous deficiencies have been corrected. The Contractor shall complete and submit the NFPA 72, Inspection and Testing Form. The test shall include all requirements of NFPA 72 and the following:

a. Test of each function of the control panel.

b. Test of each circuit in both trouble and normal modes.

c. Tests of each alarm initiating devices in both normal and trouble conditions.

d. Tests of each control circuit and device.

e. Tests of each alarm notification appliance.

f. Tests of the battery charger and batteries.

g. Complete operational tests under emergency power supply.

h. Visual inspection of wiring connections.

i. Opening the circuit at each alarm initiating device and notification appliance to test the wiring supervisory feature.

j. Ground fault

k. Short circuit faults

l. Stray voltage

m. Loop resistance

3.6 TRAINING

Training course shall be provided for the operations and maintenance staff. The course shall be conducted in the building where the system is installed or as designated by the Contracting Officer. The training period for systems operation shall consist of 1 training days (8 hours per day) and shall start after the system is functionally completed but prior to final acceptance tests. The training period for systems maintenance shall consist of 2 1 training days (8 hours per day) and shall start after the system is functionally completed but prior to final acceptance tests. The instructions shall cover items contained in the operating and maintenance instructions. In addition, training shall be provided on performance of expansions or modifications to the fire detection and alarm system. The training period for system expansions and modifications shall consist of at least 1 training days (8 hours per day) and shall start after the system is functionally completed but prior to final acceptance tests.

-- End of Section --

This page was intentionally left blank for duplex printing.

SECTION TABLE OF CONTENTS

DIVISION 13 - SPECIAL CONSTRUCTION

SECTION 13930

WET PIPE SPRINKLER SYSTEM, FIRE PROTECTION

04/98

PART 1 GENERAL

1.1 REFERENCES
1.2 GENERAL REQUIREMENTS
1.2.1 Hydraulic Design
1.2.1.1 Hose Demand
1.2.1.2 Basis for Calculations
1.2.2 Sprinkler Spacing
1.3 SUBMITTALS
1.4 HYDRAULIC CALCULATIONS
1.5 SUBMITTAL PREPARER'S QUALIFICATIONS
1.6 INSTALLER QUALIFICATIONS
1.7 REGULATORY REQUIREMENTS
1.8 DELIVERY AND STORAGE

PART 2 PRODUCTS

2.1 GENERAL EQUIPMENT REQUIREMENTS
2.1.1 Standard Products
2.1.2 Requirements for Fire Protection Service
2.1.3 Nameplates
2.2 Not Used
2.3 ABOVEGROUND PIPING SYSTEMS
2.3.1 Steel Piping System
2.3.1.1 Steel Pipe
2.3.1.2 Fittings for Non-Grooved Steel Pipe
2.3.1.3 Grooved Mechanical Joints and Fittings
2.3.1.4 Flanges
2.3.2 Copper Tube Systems
2.3.2.1 Copper Tube
2.3.2.2 Copper Fittings
2.3.3 Not Used
2.3.4 Pipe Hangers
2.3.5 Valves
2.3.5.1 Control Valve and Gate Valve
2.3.5.2 Check Valve
2.3.5.3 Hose Valve
2.4 Not Used
2.5 Not Used
2.5 Not Used
2.6 Not Used
2.7 SPRINKLERS
2.7.1 Upright Sprinkler
2.7.2 Pendent Sprinkler
2.7.3 Sidewall Sprinkler
2.7.4 Residential Sprinkler

2.8 DISINFECTING MATERIALS
2.8.1 Liquid Chlorine
2.8.2 Hypochlorites
2.9 ACCESSORIES
2.9.1 Sprinkler Cabinet
2.9.2 Pendent Sprinkler Escutcheon
2.9.3 Pipe Escutcheon
2.9.4 Sprinkler Guard
2.9.5 Identification Sign
2.10 Not Used
2.11 Not Used

PART 3 EXECUTION

3.1 INSTALLATION REQUIREMENTS
3.2 ABOVEGROUND PIPING INSTALLATION
3.2.1 Protection of Piping Against Earthquake Damage
3.2.2 Piping in Exposed Areas
3.2.3 Piping in Finished Areas
3.2.4 Pendent Sprinklers
3.2.4.1 Pendent Sprinkler Locations
3.2.5 Upright Sprinklers
3.2.6 Pipe Joints
3.2.7 Reducers
3.2.8 Pipe Penetrations
3.2.9 Escutcheons
3.2.10 Inspector's Test Connection
3.2.11 Drains
3.2.12 Not Used
3.2.13 Identification Signs
3.3 Not Used
3.4 Not Used
3.5 Not Used
3.6 DISINFECTION
3.7 FIELD PAINTING AND FINISHING
3.8 PRELIMINARY TESTS
3.8.1 Not Used
3.8.2 Aboveground Piping
3.8.2.1 Hydrostatic Testing
3.8.3 Testing of Alarm Devices
3.8.4 Main Drain Flow Test At Inspector Test Station
3.9 FINAL ACCEPTANCE TEST

-- End of Section Table of Contents --

SECTION 13930

WET PIPE SPRINKLER SYSTEM, FIRE PROTECTION
04/98

PART 1 GENERAL

1.1 REFERENCES

The publications listed below form a part of this specification to the extent referenced. The publications are referred to in the text by basic designation only.

AMERICAN SOCIETY FOR TESTING AND MATERIALS (ASTM)

ASTM A 47	(1990; R 1995) Ferritic Malleable Iron Castings
ASTM A 53	(1997) Pipe, Steel, Black and Hot-Dipped, Zinc-Coated, Welded and Seamless
ASTM A 135	(1997) Electric-Resistance-Welded Steel Pipe
ASTM A 183	(1983; R 1990) Carbon Steel Track Bolts and Nuts
ASTM A 536	(1984; R 1993) Ductile Iron Castings
ASTM A 795	(1996) Black and Hot-Dipped Zinc-Coated (Galvanized) Welded and Seamless Steel Pipe for Fire Protection Use
ASTM B 88	(1996) Seamless Copper Water Tube

AMERICAN SOCIETY OF MECHANICAL ENGINEERS (ASME)

ASME B16.1	(1989) Cast Iron Pipe Flanges and Flanged Fittings
ASME B16.3	(1992) Malleable Iron Threaded Fittings
ASME B16.4	(1992) Cast Iron Threaded Fittings
ASME B16.9	(1993) Factory-Made Wrought Steel Buttwelding Fittings
ASME B16.11	(1996) Forged Fittings, Socket-Welding and Threaded
ASME B16.18	(1984; R 1994) Cast Copper Alloy Solder Joint Pressure Fittings
ASME B16.21	(1992) Nonmetallic Flat Gaskets for Pipe

	Flanges
ASME B16.22	(1995) Wrought Copper and Copper Alloy Solder Joint Pressure Fittings
ASME B18.2.1	(1996) Square and Hex Bolts and Screws Inch Series
ASME B18.2.2	(1987; R 1993) Square and Hex Nuts (Inch Series)

AMERICAN WATER WORKS ASSOCIATION (AWWA)

AWWA-01	(1995) Standard Methods for the Examination of Water and Wastewater
AWWA B300	(1992) Hypochlorites
AWWA B301	(1992) Liquid Chlorine
AWWA M20	(1973) Manual: Water Chlorination Principles and Practices

FACTORY MUTUAL ENGINEERING AND RESEARCH (FM)

FM P7825a	(1998) Approval Guide Fire Protection
FM P7825b	(1998) Approval Guide Electrical Equipment

MANUFACTURERS STANDARDIZATION SOCIETY OF THE VALVE AND FITTINGS INDUSTRY (MSS)

MSS SP-71	(1997) Cast Iron Swing Check Valves, Flanges and Threaded Ends

NATIONAL FIRE PROTECTION ASSOCIATION (NFPA)

NFPA 13	(1996; Errata 13-96-1) Installation of Sprinkler Systems
NFPA 13R	(1996) Installation of Sprinkler Systems in Residential Occupancies Up to and Including Four Stories in Height
NFPA 24	(1995) Installation of Private Fire Service Mains and Their Appurtenances
NFPA 231C	(1995; TIA 95-1) Rack Storage of Materials
NFPA 1963	(1993) Fire Hose Connections

NATIONAL INSTITUTE FOR CERTIFICATION IN ENGINEERING TECHNOLOGIES (NICET)

NICET 1014	(1995) Program Detail Manual for Certification in the Field of Fire Protection Engineering Technology (Field Code 003) Subfield of Automatic Sprinkler System Layout

UNDERWRITERS LABORATORIES (UL)

UL 668	(1995) Hose Valves For Fire Protection Service
UL Bld Mat Dir	(1998) Building Materials Directory
UL Fire Prot Dir	(1998) Fire Protection Equipment Directory

1.2 GENERAL REQUIREMENTS

Wet pipe sprinkler system shall be provided in all areas of the buildingas indicated on the drawings. The sprinkler system shall provide fire sprinkler protection for the entire area. Except as modified herein, the system shall be designed and installed in accordance with NFPA 13 and NFPA 13R. Pipe sizes shall be determined by hydraulic calculation.

1.2.1 Hydraulic Design

The system shall be hydraulically designed to discharge a minimum density of 0.38 L/min per square meter (0.10 gpm per square foot) over the hydraulically most demanding 139 square meters (1500 square feet) of floor area. The minimum pipe size for branch lines in gridded systems shall be 32 mm(1-1/4 inch). Hydraulic calculations shall be in accordance with the Area/Density Method of NFPA 13.

1.2.1.1 Hose Demand

An allowance for interior and exterior hose stream flow of 946 L/min (250 gpm) shall be added to the sprinkler system demand

1.2.1.2 Basis for Calculations

The design of the system shall be based upon a water supply with a static pressure of 80 psi, and a flow of 900 gpm at a residual pressure of 75 psi. Water supply shall be presumed available at the base of the riser80 psi. Hydraulic calculations shall be based upon the Hazen-Williams formula with a "C" value of 120 for steel piping, and 100 for existing underground piping.

1.2.2 Sprinkler Spacing

Sprinklers shall be uniformly spaced on branch lines. Maximum spacing per sprinkler shall not exceed 13.38 square meters (144 square feet)or limits specified in NFPA 13R for light hazard occupancy. Greater areas of coverage are permitted when using special sprinklers that have been listed for such specific residental installation conditions per NFPA 13R.

1.3 SUBMITTALS

Government approval is required for submittals with a "GA" designation; submittals having an "FIO" designation are for information only. Submittals related to system configuration, hydraulic calculations, and equipment selection, including manufacturer's catalog data, working drawings, connection drawings, control diagrams and certificates shall be submitted concurrently as a complete package. The package will be reviewed by the U.S. Army Engineer District Fire Protection Engineer. The following shall be submitted in accordance with Section 01330 SUBMITTAL PROCEDURES:

SD-02 Shop Drawings

Sprinkler System Shop Drawings; G-AE.

Detail drawings conforming to the requirements established for working plans as prescribed in NFPA 13. Drawings shall include plan and elevation views which establish that the equipment will fit the allotted spaces with clearance for installation and maintenance. Each set of drawings shall include the following:

a. Descriptive index of drawings in the submittal with drawings listed in sequence by drawing number. A legend identifying device symbols, nomenclature, and conventions used.

b. Floor plans drawn to a scale not less than 1/8" = 1'-0" which clearly show locations of sprinklers, risers, pipe hangers, seismic separation assemblies, sway bracing, inspector's test connections, drains, and other applicable details necessary to clearly describe the proposed arrangement. Each type of fitting used and the locations of bushings, reducing couplings, and welded joints shall be indicated.

c. Actual center-to-center dimensions between sprinklers on branch lines and between branch lines; from end sprinklers to adjacent walls; from walls to branch lines; from sprinkler feed mains, cross-mains and branch lines to finished floor and roof or ceiling. A detail shall show the dimension from the sprinkler and sprinkler deflector to the ceiling in finished areas.

d. Longitudinal and transverse building sections showing typical branch line and cross-main pipe routing as well as elevation of each typical sprinkler above finished floor.

e. Details of each type of riser assembly; pipe hanger; sway bracing for earthquake protection, and restraint of underground water main at point-of-entry into the building, and electrical devices and interconnecting wiring.

As-Built Drawings;

As-built drawings, no later than 14 working days after completion of the Final Tests. The sprinkler system shop drawings shall be updated to reflect as-built conditions after work is completed and shall be on reproducible full-size mylar film.

SD-03 Product Data

Load Calculations for Sizing Sway Bracing

For systems that are required to be protected against damage from earthquakes, load calculations shall be provided for sizing of sway bracing.

Sprinkler System Equipment; G-AE.

Manufacturer's Catalog Data for each separate piece of equipment proposed for use in the system. Data shall indicate the name of the manufacturer of each item of equipment, with data highlighted

to indicate model, size, options, etc. proposed for installation. In addition, a complete equipment list which includes equipment description, model number and quantity shall be provided.

Hydraulic Calculations; G-AE.

Hydraulic calculations, including a drawing showing hydraulic reference points and pipe segments.

Spare Parts;

Spare parts data shall be included for each different item of material and equipment specified. The data shall include a complete list of parts and supplies, with current unit prices and source of supply, and a list of parts recommended by the manufacturer to be replaced after 1 year and 3 years of service. A list of special tools and test equipment required for maintenance and testing of the products supplied by the Contractor shall be included.

Installer Qualifications;

Qualifications of the sprinkler installer.

Submittal Preparer's Qualifications;

The name and documentation of certification of the individual who will prepare the submittals, prior to the submittal of the drawings and hydraulic calculations.

Preliminary Tests;

A schedule of preliminary tests, at least 14 days prior to the proposed start of the tests.

Final Test; G-AO

Upon successful completion of tests specified under paragraph PRELIMINARY TESTS, written notification shall be given to the Contracting Officer of the date for the final acceptance test. Notification shall be provided at least 14 days prior to the proposed start of the test. Notification shall include a copy of the Contractor's Material & Test Certificates.

SD-07 Certificates

Contractor's Material & Test Certificates;

Certificates, as specified in NFPA 13, shall be completed and signed by the Contractor's Representative performing required tests for both underground and aboveground piping.

SD-08 Manufacturer's Instructions

Test Procedures;

Proposed test procedures for piping hydrostatic test, testing of alarms, at least 14 days prior to the start of related testing.

SD-10 Operation and Maintenance Manuals

Sprinkler System;

Manuals shall be in loose-leaf binder format and grouped by technical sections consisting of manufacturer's standard brochures, schematics, printed instructions, general operating procedures, and safety precautions. The manuals shall list routine maintenance procedures possible breakdowns, and repairs, and troubleshooting guide. This shall include procedures and instructions pertaining to frequency of preventive maintenance, inspection, adjustment, lubrication and cleaning necessary to minimize corrective maintenance and repair.

1.4 HYDRAULIC CALCULATIONS

Hydraulic calculations shall be as outlined in NFPA 13 except that calculations shall be performed by computer using software specifically designed for fire protection system design. Software which uses k-factors for typical branch lines is not acceptable. Calculations shall be taken back to the water supply source unless water supply data is otherwise indicated. Calculations shall substantiate that the design area indicated is the hydraulically most demanding. Water supply curves and system requirements shall be plotted on semi-logarithmic graph paper so as to present a summary of the complete hydraulic calculation. A summary sheet listing sprinklers in the design area and their respective hydraulic reference points, elevations, actual discharge pressures and actual flows shall be provided. Elevations of hydraulic reference points (nodes) shall be indicated. Documentation shall identify each pipe individually and the nodes connected thereto. The diameter, length, flow, velocity, friction loss, number and type fittings, total friction loss in the pipe, equivalent pipe length and Hazen-Williams coefficient shall be indicated for each pipe. For gridded systems, calculations shall show peaking of demand area friction loss to verify that the hydraulically most demanding area is being used. Also for gridded systems, a flow diagram indicating the quantity and direction of flows shall be included. A drawing showing hydraulic reference points (nodes) and pipe designations used in the calculations shall be included and shall be independent of shop drawings.

1.5 SUBMITTAL PREPARER'S QUALIFICATIONS

The sprinkler system submittals, including as-built drawings, shall be prepared by an individual who is either a registered professional engineer or who is certified as a Level IV Technician by National Institute for Certification in Engineering Technologies (NICET) in the Automatic Sprinkler System Layout subfield of Fire Protection Engineering Technology in accordance with NICET 1014.

1.6 INSTALLER QUALIFICATIONS

The installer shall be experienced and regularly engaged in the installation of the type and complexity of system included in this project. A statement prior to submittal of any other data or drawings, that the proposed sprinkler system installer is regularly engaged in the installation of the type and complexity of system included in this project shall be provided. In addition, data identifying the location of at least three systems recently installed by the proposed installer which are comparable to the system specified shall be submitted. Contractor shall certify that each system has performed satisfactorily, in the manner

intended, for a period of not less than 6 months.

1.7 REGULATORY REQUIREMENTS

Compliance with referenced NFPA standards is mandatory. This includes advisory provisions listed in the appendices of such standards, as though the word "shall" had been substituted for the word "should" wherever it appears. Applicable material and installation standards referenced in Appendix A of NFPA 13 and NFPA 24 shall be considered mandatory the same as if such referenced standards were specifically listed in this specification. In the event of a conflict between specific provisions of this specification and applicable NFPA standards, this specification shall govern. All requirements that exceed the minimum requirements of NFPA 13 shall be incorporated into the design. Reference to "authority having jurisdiction" shall be interpreted to mean the Contracting Officer.

1.8 DELIVERY AND STORAGE

Equipment placed in storage shall be stored with protection from the weather, humidity and temperature variations, dirt and dust or other contaminants.

PART 2 PRODUCTS

2.1 GENERAL EQUIPMENT REQUIREMENTS

2.1.1 Standard Products

Materials and equipment shall be standard products of a manufacturer regularly engaged in the manufacture of such products and shall essentially duplicate items that have been in satisfactory use for at least 2 years prior to bid opening.

2.1.2 Requirements for Fire Protection Service

Equipment and materials shall have been tested by Underwriters Laboratories, Inc. and listed in UL Fire Prot Dir or approved by Factory Mutual and listed in FM P7825a and FM P7825b. Where the terms "listed" or "approved" appear in this specification, such shall mean listed in UL Fire Prot Dir or FM P7825a and FM P7825b

2.1.3 Nameplates

Major components of equipment shall have the manufacturer's name, address, type or style, model or serial number, and catalog number on a plate permanently affixed to the item of equipment.

2.2 Not Used

2.3 ABOVEGROUND PIPING SYSTEMS

Aboveground piping shall be steel or copper.

2.3.1 Steel Piping System

2.3.1.1 Steel Pipe

Except as modified herein, steel pipe shall be black as permitted by NFPA 13 and shall conform to applicable provisions of ASTM A 795, ASTM A 53, or

ASTM A 135. Pipe in which threads or grooves are cut shall be Schedule 40 or shall be listed by Underwriters' Laboratories to have a corrosion resistance ratio (CRR) of 1.0 or greater after threads or grooves are cut. Pipe shall be marked with the name of the manufacturer, kind of pipe, and ASTM designation.

2.3.1.2 Fittings for Non-Grooved Steel Pipe

Fittings shall be cast iron conforming to ASME B16.4, steel conforming to ASME B16.9 or ASME B16.11, or malleable iron conforming to ASME B16.3. Steel press fittings shall be approved for fire protection systems. Fittings into which sprinklers, drop nipples or riser nipples (sprigs) are screwed shall be threaded type. Plain-end fittings with mechanical couplings, fittings which use steel gripping devices to bite into the pipe and segmented welded fittings shall not be used.

2.3.1.3 Grooved Mechanical Joints and Fittings

Joints and fittings shall be designed for not less than 175 psi service and shall be the product of the same manufacturer. Fitting and coupling houses shall be malleable iron conforming to ASTM A 47, Grade 32510; ductile iron conforming to ASTM A 536, Grade 65-45-12. Gasket shall be the flush type that fills the entire cavity between the fitting and the pipe. Nuts and bolts shall be heat-treated steel conforming to ASTM A 183 and shall be cadmium plated or zinc electroplated.

2.3.1.4 Flanges

Flanges shall conform to NFPA 13 and ASME B16.1. Gaskets shall be non-asbestos compressed material in accordance with ASME B16.21, 1/16 inch thick, and full face or self-centering flat ring type. Bolts shall be squarehead conforming to ASME B18.2.1 and nuts shall be hexagon type conforming to ASME B18.2.2.

2.3.2 Copper Tube Systems

2.3.2.1 Copper Tube

Copper tube shall conform to ASTM B 88, Types L and M.

2.3.2.2 Copper Fittings

Cast copper alloy pressure fittings shall conform to ASME B16.18 and wrought copper and bronze pressure fittings shall conform to ASME B16.22.

2.3.3 Not Used

2.3.4 Pipe Hangers

Hangers shall be listed in UL Fire Prot Dir or FM P7825a and FM P7825b and of the type suitable for the application, construction, and pipe type and sized involved.

2.3.5 Valves

2.3.5.1 Control Valve and Gate Valve

Manually operated sprinkler control valve and gate valve shall be outside stem and yoke (OS&Y) type and shall be listed in UL Bld Mat Dir or FM P7825a

and FM P7825b.

2.3.5.2 Check Valve

Check valve 2 inches and larger shall be listed in UL Bld Mat Dir or FM P7825a and FM P7825b. Check valves 4 inchesand larger shall be of the swing type with flanged cast iron body and flanged inspection plates, shall have a clear waterway and shall meet the requirements of MSS SP-71, for Type 3 or 4.

2.3.5.3 Hose Valve

Valve shall comply with UL 668 and shall have a minimum rating of 2070 kPa (300 psi). Valve shall be non-rising stem, all bronze, 90 degree angle type, with 2-1/2 inch American National Standard Fire Hose Screw Thread (NH) male outlet in accordance with NFPA 1963. Hose valve shall be provided with 2-1/2 to 1-1/2 inch reducer. Hose valves shall be equipped with lugged cap with drip drain, cap gasket and chain. Valve finish shall be polished brass.

2.4 Not Used

2.5 Not Used

2.5 Not Used
2.6 Not Used

2.7 SPRINKLERS

Sprinklers shall be used in accordance with their listed spacing limitations. Temperature classification shall be ordinary orintermediateas indicated on drawings. Sprinklers in high heat areas including attic spaces or in close proximity to unit heaters shall have temperature classification in accordance with NFPA 13. Sprinklers with internal O-rings shall not be used.

2.7.1 Upright Sprinkler

Upright sprinkler shall be brass and shall have a nominal 12.7 mm (1/2 inch) 1/2 inch or 13.5 mm (17/32 inch) 17/32 inch orifice.

2.7.2 Pendent Sprinkler

Pendent sprinkler shall be of the fusible strut or glass bulb type, recessed type with nominal 12.7 mm (1/2 inch) 1/2 inch or 13.5 mm (17/32 inch) 17/32 inch orifice. Pendent sprinklers shall have a polished chrome finish.

2.7.3 Sidewall Sprinkler

Sidewall sprinkler shall have a nominal 12.7 mm (1/2 inch)orifice. Sidewall sprinkler shall have a polished chrome finish with a 2-piece extended chrome escutcheon to match those used on the existing heads in Phase 3. Sidewall sprinkler shall be the quick-response type.

2.7.4 Residential Sprinkler

Residential sprinkler shall be the pendentandsidewall type with nominal 12.7 mm (1/2 inch)orifice. Residential sprinkler shall have a polished chrome finish.

2.8 DISINFECTING MATERIALS

2.8.1 Liquid Chlorine

Liquid chlorine shall conform to AWWA B301.

2.8.2 Hypochlorites

Calcium hypochlorite and sodium hypochlorite shall conform to AWWA B300.

2.9 ACCESSORIES

2.9.1 Sprinkler Cabinet

Spare sprinklers shall be provided in accordance with NFPA 13 and shall be packed in a suitable metal or plastic cabinet. Spare sprinklers shall be representative of, and in proportion to, the number of each type and temperature rating of the sprinklers installed. At least one wrench of each type required shall be provided.

2.9.2 Pendent Sprinkler Escutcheon

Escutcheon shall be one-piece metallic type with a depth of less than 3/4 inch and suitable for installation on pendent sprinklers. The escutcheon shall have a factory finish that matches the pendent sprinkler heads.

2.9.3 Pipe Escutcheon

Escutcheon shall be polished chromium-plated zinc alloy, or polished chromium-plated copper alloy. Escutcheons shall be either one-piece or split-pattern, held in place by internal spring tension or set screw. Semi-recessed chrome esutcheons shall be installed on all pendant sprinklers. Two piece extended chrome escutcheons shall be installed on horizontal sidewall sprinklers.

2.9.4 Sprinkler Guard

Guard shall be a steel wire cage designed to encase the sprinkler and protect it from mechanical damage. Guards shall be provided on sprinklers located in Mechanical Equipment Room.

2.9.5 Identification Sign

Valve identification sign shall be minimum 150 mm wide x 50 mm high (6 inches wide x 2 inches high) with enamel baked finish on minimum 1.214 mm (18 gauge) or 0.024 inch aluminum with red letters on a white background or white letters on red background. Wording of sign shall include, but not be limited to "main drain," "auxiliary drain," "inspector's test," "alarm test," "alarm line," and similar wording as required to identify operational components.

2.10 Not Used

2.11 Not Used

PART 3 EXECUTION

3.1 INSTALLATION REQUIREMENTS

The installation shall be in accordance with the applicable provisions of NFPA 13, NFPA 24 and publications referenced therein. Installation of in-rack sprinklers shall comply with applicable provisions of NFPA 231C.

3.2 ABOVEGROUND PIPING INSTALLATION

Piping shall be run straight and bear evenly on hangers and supports.

3.2.1 Protection of Piping Against Earthquake Damage

Protection of piping from earthquake damage is not required.

3.2.2 Piping in Exposed Areas

Exposed piping shall be installed so as not to diminish exit access widths, corridors or equipment access. Exposed horizontal piping, including drain piping, shall be installed to provide maximum headroom.

3.2.3 Piping in Finished Areas

In areas with suspended or dropped ceilings and in areas with concealed spaces above the ceiling, piping shall be concealed above ceilings. Piping shall be inspected, tested and approved before being concealed. Risers and similar vertical runs of piping in finished areas shall be concealed.

3.2.4 Pendent Sprinklers

Drop nipples to pendent sprinklers shall consist of minimum 1 inch pipe with a reducing coupling into which the sprinkler shall be threaded. Hangers shall be provided on arm-overs to drop nipples supplying pendent sprinklers when the arm-over exceeds 300 mm (12 inches). Where sprinklers are installed below suspended or dropped ceilings, drop nipples shall be cut such that sprinkler ceiling plates or escutcheons are of a uniform depth throughout the finished space. The outlet of the reducing coupling shall not extend more than 25 mm (1 inch)below the underside of the ceiling. On pendent sprinklers installed below suspended or dropped ceilings, the distance from the sprinkler deflector to the underside of the ceiling shall not exceed 100 mm. (4 inches). Recessed pendent sprinklers shall be installed such that the distance from the sprinkler deflector to the underside of the ceiling shall not exceed the manufacturer's listed range and shall be of uniform depth throughout the finished area.

3.2.4.1 Pendent Sprinkler Locations

Pendent sprinklers in suspended ceilings shall be a minimum of 150 mm (6 inches)from ceiling grid.

3.2.5 Upright Sprinklers

Riser nipples or "sprigs" to upright sprinklers shall contain no fittings between the branch line tee and the reducing coupling at the sprinkler. Riser nipples exceeding 750 mm (30 inches)in length shall be individually supported.

3.2.6 Pipe Joints

Pipe joints shall conform to NFPA 13, except as modified herein. Not more than four threads shall show after joint is made up. Welded joints will be

permitted, only if welding operations are performed as required by NFPA 13 at the Contractor's fabrication shop, not at the project construction site. Flanged joints shall be provided where indicated or required by NFPA 13. Grooved pipe and fittings shall be prepared in accordance with the manufacturer's latest published specification according to pipe material, wall thickness and size. Grooved couplings and fittings shall be from the same manufacturer.

3.2.7 Reducers

Reductions in pipe sizes shall be made with one-piece tapered reducing fittings. The use of grooved-end or rubber-gasketed reducing couplings will not be permitted. When standard fittings of the required size are not manufactured, single bushings of the face type will be permitted. Where used, face bushings shall be installed with the outer face flush with the face of the fitting opening being reduced. Bushings shall not be used in elbow fittings, in more than one outlet of a tee, in more than two outlets of a cross, or where the reduction in size is less than 1/2 inch.

3.2.8 Pipe Penetrations

Cutting structural members for passage of pipes or for pipe-hanger fastenings will not be permitted. Pipes that must penetrate concrete or masonry walls or concrete floors shall be core-drilled and provided with pipe sleeves. Each sleeve shall be Schedule 40 galvanized steel, ductile iron or cast iron pipe and shall extend through its respective wall or floor and be cut flush with each wall surface. Sleeves shall provide required clearance between the pipe and the sleeve per NFPA 13. The space between the sleeve and the pipe shall be firmly packed with mineral wool insulation. Where pipes pass through fire walls, fire partitions, or floors, a fire seal shall be placed between the pipe and sleeve in accordance with Section 07840 FIRESTOPPING. In penetrations which are not fire-rated or not a floor penetration, the space between the sleeve and the pipe shall be sealed at both ends with plastic waterproof cement which will dry to a firm but pliable mass or with a mechanically adjustable segmented elastomer seal.

3.2.9 Escutcheons

Escutcheons shall be provided for pipe penetration of ceilings and walls. Escutcheons shall be securely fastened to the pipe at surfaces through which piping passes.

3.2.10 Inspector's Test Connection

Unless otherwise indicated, test connection shall consist of 1 inch pipe connected to the remote branch line; a test valve located approximately 7 feet above the floor; a smooth bore brass outlet equivalent to the smallest orifice sprinkler used in the system; and a painted metal identification sign affixed to the valve with the words "Inspector's Test." The discharge orifice shall be located outside the building wall directed so as not to cause damage to adjacent construction or landscaping during full flow discharge.

3.2.11 Drains

Main drain piping shall be provided to discharge at the floor drainlocation indicated. Auxiliary drains shall be provided as required by NFPA 13 except that drain valves shall be used where drain plugs are otherwise

permitted. Where branch lines terminate at low points and form trapped sections, such branch lines shall be manifolded to a common drain line.

3.2.12 Not Used

3.2.13 Identification Signs

Signs shall be affixed to each control valve, inspector test valve, main drain, auxiliary drain, test valve, and similar valves as appropriate or as required by NFPA 13. Hydraulic design data nameplates shall be permanently affixed to each sprinkler riser as specified in NFPA 13.

3.3 Not Used

3.4 Not Used

3.5 Not Used

3.6 DISINFECTION

After all system components are installed and hydrostatic test are successfully completed, each portion of the sprinkler system to be disinfected shall be thoroughly flushed with potable water until all entrained dirt and other foreign materials have been removed before introducing chlorinating material. Flushing shall be conducted by removing the flushing fitting of the cross mains and of the grid branch lines, and then back-flushing through the sprinkler main drains. The chlorinating material shall be hypochlorites or liquid chlorine. Water chlorination procedure shall be in accordance with AWWA M20. The chlorinating material shall be fed into the sprinkler piping at a constant rate of 50 parts per million (ppm). A properly adjusted hypochlorite solution injected into the system with a hypochlorinator, or liquid chlorine injected into the system through a solution-fed chlorinator and booster pump shall be used. Chlorination application shall continue until the entire system if filled. The water shall remain in the system for a minimum of 24 hours. Each valve in the system shall be opened and closed several times to ensure its proper disinfection. Following the 24-hour period, no less than 25 ppm chlorine residual shall remain in the system. The system shall then be flushed with clean water until the residual chlorine is reduced to less than one part per million. Samples of water in properly disinfected containers for bacterial examination will be taken from several system locations which are approved by the Contracting Officer. Samples shall be tested for total coliform organisms (coliform bacteria, fecal coliform, streptococcal, and other bacteria) in accordance with AWWA-01. The testing method shall be either the multiple-tube fermentation technique or the membrane-filter technique. The disinfection shall be repeated until tests indicate the absence of coliform organisms (zero mean coliform density per 100 milliliters) in the samples for at least 2 full days. The system will not be accepted until satisfactory bacteriological results have been obtained.

3.7 FIELD PAINTING AND FINISHING

Field painting and finishing are specified in Section 09900 PAINTING, GENERAL.

3.8 PRELIMINARY TESTS

The system, including the underground water mains, and the aboveground piping and system components, shall be tested to assure that equipment and

components function as intended. The underground and aboveground interior piping systems and attached appurtenances subjected to system working pressure shall be tested in accordance with NFPA 13 and NFPA 24. Upon completion of specified tests, the Contractor shall complete certificates as specified in paragraph SUBMITTALS.

3.8.1 Not Used

3.8.2 Aboveground Piping

3.8.2.1 Hydrostatic Testing

Aboveground piping shall be hydrostatically tested in accordance with NFPA 13 at not less than 200 psi or 50 psi in excess of maximum system operating pressure and shall maintain that pressure without loss for 2 hours. There shall be no drop in gauge pressure or visible leakage when the system is subjected to the hydrostatic test. The test pressure shall be read from a gauge located at the low elevation point of the system or portion being tested.

3.8.3 Testing of Alarm Devices

Each alarm switch shall be tested by flowing water through the inspector's test connection. Each water-operated alarm devices shall be tested to verify proper operation.

3.8.4 Main Drain Flow Test At Inspector Test Station

Following flushing of the underground piping, a main drain test shall be made to verify the adequacy of the water supply. Static and residual pressures shall be recorded on the certificate specified in paragraph SUBMITTALS. In addition, a main drain test shall be conducted each time after a main control valve is shut and opened.

3.9 FINAL ACCEPTANCE TEST

A technician employed by the installing Contractor shall be present for the final tests and shall provide a complete demonstration of the operation of the system. This shall include operation of control valves and flowing of inspector's test connections to verify operation of associated waterflow alarm switches. After operation of control valves has been completed, the main drain test shall be repeated to assure that control valves are in the open position. In addition, the representative shall have available copies of as-built drawings and certificates of tests previously conducted. The installation shall not be considered accepted until identified discrepancies have been corrected and test documentation is properly completed and received.

-- End of Section --

SECTION TABLE OF CONTENTS

DIVISION 15 - MECHANICAL

SECTION 15080

THERMAL INSULATION FOR MECHANICAL SYSTEMS

03/99

PART 1 GENERAL

1.1 REFERENCES
1.2 SYSTEM DESCRIPTION
1.3 GENERAL QUALITY CONTROL
1.3.1 Standard Products
1.3.2 Installer's Qualifications
1.3.3 Surface Burning Characteristics
1.3.4 Identification of Materials
1.4 SUBMITTALS
1.5 STORAGE

PART 2 PRODUCTS

2.1 GENERAL MATERIALS
2.1.1 Adhesives
2.1.1.1 Not Used
2.1.1.2 Mineral Fiber Insulation Cement
2.1.1.3 Lagging Adhesive
2.1.2 Contact Adhesive
2.1.3 Caulking
2.1.4 Corner Angles
2.1.5 Finishing Cement
2.1.6 Fibrous Glass Cloth and Glass Tape
2.1.7 Staples
2.1.8 Jackets
2.1.8.1 White Vapor Retarder All Service Jacket (ASJ)
2.1.8.2 Not Used
2.1.8.3 Not Used
2.1.9 Vapor Retarder Coating
2.1.9.1 Vapor Retarder Required
2.1.9.2 Vapor Retarder Not Required
2.1.10 Not Used
2.2 PIPE INSULATION MATERIALS
2.2.1 Aboveground Cold Pipeline
2.2.1.1 Outdoor, Indoor - Exposed or Concealed
2.2.1.1.# Flexible Cellular Insulation
2.2.1.1.# Phenolic Insulation
2.2.1.1.# Cellular Glass One piece and rigid moulded glass fiber. 2.2.1.1.4 Mineral Fiber
2.2.2 Aboveground Hot Pipeline
2.2.2.1 Outdoor, Indoor - Exposed or Concealed
2.2.2.1.# Mineral Fiber
2.2.3 Flexible Cellular Insulation ASTM C534 Type I or II: Type II shall have vapor retarder skin on both sides of the insulation.
2.2.4 Not Used
2.3 DUCT INSULATION MATERIALS
2.3.1 Rigid Mineral Fiber

2.3.2 Flexible Mineral Fiber
2.4 Not Used
2.4.1 Not Used
2.4.1.1 Not Used
2.4.2 Not Used
2.4.2.1 Not Used
2.4.2.2 Not Used
2.4.2.3 Not Used
2.4.2.4 [Enter Appropriate Subpart Title Here]

PART 3 EXECUTION

3.1 APPLICATION - GENERAL
3.1.1 Installation
3.1.2 Firestopping
3.1.3 Painting and Finishing
3.1.4 Installation of Flexible Cellular Insulation
3.1.5 Welding
3.1.6 Pipes/Ducts/Equipment which Require Insulation
3.2 PIPE INSULATION INSTALLATION
3.2.1 Pipe Insulation
3.2.1.1 General
3.2.1.2 Pipes Passing Through Walls, Roofs, and Floors
3.2.1.3 Pipes Passing Through Hangers
3.2.1.4 Flexible Cellular Pipe Insulation
3.2.1.5 Pipes in high abuse areas.
3.2.2 Aboveground Cold Pipelines
3.2.2.1 Insulation Thickness
3.2.2.2 Jacket for Mineral Fiber, Cellular Glass, and Phenolic Foam Insulated Pipe
3.2.2.3 Insulation for Straight Runs (Mineral Fiber, Cellular Glass and Phenolic Foam)
3.2.2.4 Insulation for Fittings and Accessories
3.2.2.5 Optional PVC Fitting Covers
3.2.3 Aboveground Hot Pipelines
3.2.3.1 Insulation Thickness
3.2.3.2 Jacket for Insulated Hot Pipe
3.2.3.3 Insulation for Straight Runs
3.2.3.4 Insulation for Fittings and Accessories
3.2.4 Piping Exposed to Weather
3.2.4.1 Aluminum Jacket
3.2.4.2 Insulation for Fittings
3.2.4.3 PVC Lagging
3.2.5 Not Used
3.2.5.1 Not Used.
3.2.5.2 Not Used
3.3 DUCT INSULATION INSTALLATION
3.3.1 Duct Insulation Thickness
3.3.2 Insulation and Vapor Retarder for Cold Air Duct
3.3.2.1 Installation on Concealed Duct
3.3.2.2 Not used
3.3.3 Insulation for Warm Air Duct
3.3.3.1 Installation on Concealed Duct
3.3.3.2 Not Used
3.3.4 Ducts Handling Air for Dual Purpose
3.3.5 Not Used
3.3.6 Duct Test Holes
3.3.7 Not Used
3.4 Not Used

3.4.1 Not Used
3.4.2 Not Used
3.4.2.1 Not Used
3.4.2.2 Not Used
3.4.2.3 Not Used
3.4.3 Not Used
3.4.3.1 Not Used
3.4.3.2 Not Used
3.4.3.3 Not Used
3.4.4 Not Used
3.4.5 Not Used

-- End of Section Table of Contents --

GUIDE SPECIFICATION FOR CONSTRUCTION

SECTION 15080

THERMAL INSULATION FOR MECHANICAL SYSTEMS
03/99

PART 1 GENERAL

1.1 REFERENCES

The publications listed below form a part of this specification to the extent referenced. The publications are referred to in the text by basic designation only. At the discretion of the government, the manufacturer of any material supplied will be required to furnish test reports pertaining to any of the tests necessary to assure compliance with the standard or standards referenced in this specification.

AMERICAN SOCIETY FOR TESTING AND MATERIALS (ASTM)

ASTM B 209	(1996) Aluminum and Aluminum-Alloy Sheet and Plate
ASTM C 195	(1995) Mineral Fiber Thermal Insulating Cement
ASTM C 449/C 449M	(1995) Mineral Fiber Hydraulic-Setting Thermal Insulating and Finishing Cement
ASTM C 518	(1991) Steady-State Heat Flux Measurements and Thermal Transmission Properties by Means of the Heat Flow Meter Apparatus
ASTM C 534	(1994) Preformed Flexible Elastomeric Cellular Thermal Insulation in Sheet and Tubular Form
ASTM C 547	(1995) Mineral Fiber Pipe Insulation
ASTM C 553	(1992) Mineral Fiber Blanket Thermal Insulation for Commercial and Industrial Applications
ASTM C 612	(1993) Mineral Fiber Block and Board Thermal Insulation
ASTM C 665	(1995) Mineral-Fiber Blanket Thermal Insulation for Light Frame Construction and Manufactured Housing
ASTM C 647	(1995) Properties and Tests of Mastics and Coating Finishes for Thermal Insulation
ASTM C 795	(1992) Thermal Insulation for Use in Contact With Austenitic Stainless Steel

ASTM C 920	(1995) Elastomeric Joint Sealants
ASTM C 921	(1989 R; 1996) Determining the Properties of Jacketing Materials for Thermal Insulation
ASTM C 1126	(1996) Faced or Unfaced Rigid Cellular Phenolic Thermal Insulation
ASTM C 1136	(1995) Flexible, Low Permeance Vapor retarders for Thermal Insulation
ASTM C 1290	(1995) Flexible Fibrous Glass Blanket Insulation Used to Externally Insulate HV AC Ducts
ASTM E 84	(1997a) Surface Burning Characteristics of Building Materials
ASTM E 96	(1995) Water Vapor Transmission of Materials

MANUFACTURERS STANDARDIZATION SOCIETY OF THE VALVE AND FITTINGS INDUSTRY (MSS)

MSS SP-69	(1996) Pipe Hangers and Supports - Selection and Application

MIDWEST INSULATION CONTRACTORS ASSOCIATION (MICA)

MICA Insulation Stds	(1993) National Commercial & Industrial Insulation Standards

1.2 SYSTEM DESCRIPTION

Field-applied insulation and accessories on mechanical systems shall be as specified herein; factory-applied insulation is specified under the piping, duct or equipment to be insulated. Field applied insulation materials required for use on Government-furnished items as listed in the SPECIAL CONTRACT REQUIREMENTS shall be furnished and installed by the Contractor.

1.3 GENERAL QUALITY CONTROL

1.3.1 Standard Products

Materials shall be the standard products of manufacturers regularly engaged in the manufacture of such products and shall essentially duplicate items that have been in satisfactory use for at least 2 years prior to bid opening.

1.3.2 Installer's Qualifications

Qualified installers shall have successfully completed three or more similar type jobs within the last 5 years.

1.3.3 Surface Burning Characteristics

Unless otherwise specified, insulation not covered with a jacket shall have a flame spread index no higher than 75 and a smoke developed index no

higher than 150. Insulation systems which are located in air plenums, in ceiling spaces, and in attic spaces shall have a flame spread index no higher than 25 and a smoke developed index no higher than 50. Insulation materials located exterior to the building perimeter are not required to be fire-rated. Flame spread and smoke developed indexes shall be determined by ASTM E 84. Insulation shall be tested in the same density and installed thickness as the material to be used in the actual construction. Material supplied by a manufacturer with a jacket shall be tested as a composite material. Jackets , facings, and adhesives shall have a flame spread index no higher than 25 and a smoke developed index no higher than 50 when tested in accordance with ASTM E 84.

1.3.4 Identification of Materials

Packages or standard containers of insulation, jacket material, cements, adhesives, and coatings delivered for use, and samples required for approval shall have manufacturer's stamp or label attached giving the name of the manufacturer and brand, and a description of the material.

1.4 SUBMITTALS

None.

1.5 STORAGE

Materials shall be delivered in the manufacturer's unopened containers. Materials delivered and placed in storage shall be provided with protection from weather, humidity, dirt, dust and other contaminants. Insulation material and supplies that become dirty, dusty, wet, or otherwise contaminated may be rejected by the Contracting Officer.

PART 2 PRODUCTS

2.1 GENERAL MATERIALS

Materials shall be compatible and shall not contribute to corrosion, soften, or otherwise attack surfaces to which applied in either the wet or dry state. Materials to be used on stainless steel surfaces shall meet ASTM C 795 requirements. Materials shall be asbestos free and conform to the following:

2.1.1 Adhesives

2.1.1.1 Not Used

2.1.1.2 Mineral Fiber Insulation Cement

Cement shall be in accordance with ASTM C 195.

2.1.1.3 Lagging Adhesive

Lagging is the material used for thermal insulation, especially around a cylindrical object. This may include the insulation as well as the cloth/material covering the insulation. Lagging adhesives shall be nonflammable and fire-resistant and shall have a flame spread rating no higher than 25 and a smoke developed rating no higher than 50 when tested in accordance with ASTM E 84. Adhesive shall be pigmented [white] [red]

and be suitable for bonding fibrous glass cloth to faced and unfaced fibrous glass insulation board; for bonding cotton brattice cloth to faced and unfaced fibrous glass insulation board; for sealing edges of and bounding fibrous glass tape to joints of fibrous glass board; for bonding lagging cloth to thermal insulation; or for attaching fibrous glass insulation to metal surfaces. Lagging adhesives shall be applied in strict accordance with the manufacturer's recommendations.

2.1.2 Contact Adhesive

Adhesive may be dispersed in a nonhalogenated organic solvent or, dispersed in a nonflammable organic solvent which shall not have a fire point below 200 degrees F. The adhesive shall not adversely affect, initially or in service, the insulation to which it is applied, nor shall it cause any corrosive effect on metal to which it is applied. Any solvent dispersing medium or volatile component of the adhesive shall have no objectionable odor and shall not contain any benzene or carbon tetrachloride. The dried adhesive shall not emit nauseous, irritating, or toxic volatile matters or aerosols when the adhesive is heated to any temperature up to 212 degrees F. The adhesive shall be nonflammable and fire resistant.

2.1.3 Caulking

ASTM C 920, Type S, Grade NS, Class 25, Use A.

2.1.4 Corner Angles

Nominal 0.016 inch aluminum 1 x 1 inch with factory applied kraft backing. Aluminum shall be ASTM B 209, Alloy 3003, 3105, or 5005.

2.1.5 Finishing Cement

Mineral fiber hydraulic-setting thermal insulating cement ASTM C 449/C 449M. All cements that may come in contact with Austenitic stainless steel must include testing per ASTM C 795.

2.1.6 Fibrous Glass Cloth and Glass Tape

Fibrous glass cloth and glass tape shall have flame spread and smoke developed ratings of no greater than 25/50 when measured in accordance with ASTM E 84. Tape shall be 4 inch wide rolls. Class 3 tape shall be 4.5 ounces per square yard.

2.1.7 Staples

Outward clinching type.

2.1.8 Jackets

ASTM C 921, Type I, maximum moisture vapor transmission 0.02 perms, (measured before factory application or installation), minimum puncture resistance 50 Beach units on all surfaces except concealed ductwork, where a minimum puncture resistance of 25 Beach units is acceptable. Minimum tensile strength, 35 pound/inch width. ASTM C 921, Type II, minimum puncture resistance 25 Beach units, tensile strength minimum 20 pound/inch width. Jackets used on insulation exposed in finished areas shall have white finish suitable for painting without sizing. Based on the application, insulation materials which require factory applied jackets are mineral fiber, cellular glass, and phenolic foam. All non-metallic jackets

shall have a maximum flame spread index of 25 and a maximum smoke developed index of 50 when tested in accordance with ASTM E 84.

2.1.8.1 White Vapor Retarder All Service Jacket (ASJ)

For use on hot/cold pipes, ducts, or equipment vapor retarder jackets used on insulation exposed in finished areas shall have white finish suitable for painting without sizing.

2.1.8.2 Not Used

2.1.8.3 Not Used

2.1.9 Vapor Retarder Coating

The vapor retarder coating shall be fire and water resistant and appropriately selected for either outdoor or indoor service. Color shall be white. The water vapor permeance of the compound shall be determined according to procedure B of ASTM E 96 utilizing apparatus described in ASTM E 96. The coating shall be a nonflammable, fire resistant type. All other application and service properties shall be in accordance with ASTM C 647.

2.1.9.1 Vapor Retarder Required

ASTM C 1136, Type I, maximum moisture vapor transmission 0.02 perms, minimum puncture resistance 50 Beach units on all surfaces except concealed ductwork, where Type II, maximum moisture vapor transmission 0.02 perms, a minimum puncture resistance of 25 Beach units is acceptable.

2.1.9.2 Vapor Retarder Not Required

ASTM C 1136, Type III, maximum moisture vapor transmission 0.10 perms, minimum puncture resistance 50 Beach units on all surfaces except ductwork, where Type IV, maximum moisture vapor transmission 0.10, a minimum puncture resistance of 25 Beach units is acceptable.

2.1.10 Not Used

2.2 PIPE INSULATION MATERIALS

Pipe insulation materials shall be limited to those listed herein and shall meet the following requirements:

2.2.1 Aboveground Cold Pipeline

Insulation for minus 30 degrees to plus 60 degrees F shall be as follows:

2.2.1.1 Outdoor, Indoor - Exposed or Concealed

2.2.1.1.# Flexible Cellular Insulation

ASTM C 534, Type I or II. Type II shall have vapor retarder skin on both sides of the insulation.

2.2.1.1.# Phenolic Insulation

ASTM C 1126, Type III. Phenolic insulations shall comply with ASTM C 795 and with the ASTM C 665 paragraph Corrosiveness. Supply the insulation with manufacturers recommended factor applied jacket.2.2.1.1.# Cellular

Glass

One piece and rigid moulded glass fiber.

2.2.1.1.4 Mineral Fiber

ASTM C 547, Types I, II or III, supply the insulation with manufacturers recommended factory applied jacket.

2.2.2 Aboveground Hot Pipeline

For aboveground hot pipeline above 60 degrees F insulation the following requirements shall be met. Supply the insulation with manufacturers recommended factory applied jacket.

2.2.2.1 Outdoor, Indoor - Exposed or Concealed

2.2.2.1.# Mineral Fiber

ASTM C 547, Types I, II or III, supply the insulation with manufacturers recommended factory applied jacket.

2.2.3 Flexible Cellular Insulation

ASTM C534 Type I or II: Type II shall have vapor retarder skin on both sides of the insulation.

2.2.4 Not Used

2.3 DUCT INSULATION MATERIALS

Duct insulation materials shall be limited to those listed herein and shall meet the following requirements:

2.3.1 Rigid Mineral Fiber

ASTM C 612, Type IA, IB, II, III, & IV.

2.3.2 Flexible Mineral Fiber

ASTM C 553, Type I,or Type II up to 250 F. ASTM C 1290 Type III.

2.4 Not Used

2.4.1 Not Used

2.4.1.1 Not Used

2.4.2 Not Used

2.4.2.1 Not Used

2.4.2.2 Not Used

2.4.2.3 Not Used

2.4.2.4 [Enter Appropriate Subpart Title Here]

PART 3 EXECUTION

3.1 APPLICATION - GENERAL

3.1.1 Installation

Except as otherwise specified, material shall be installed in accordance with the manufacturer's written instructions. Insulation materials shall not be applied until tests specified in other sections of this specification are completed. Material such as rust, scale, dirt and moisture shall be removed from surfaces to receive insulation. Insulation shall be kept clean and dry. Insulation shall not be removed from its shipping containers until the day it is ready to use and shall be returned to like containers or equally protected from dirt and moisture at the end of each workday. Insulation that becomes dirty shall be thoroughly cleaned prior to use. If insulation becomes wet or if cleaning does not restore the surfaces to like new condition, the insulation will be rejected, and shall be immediately removed from the jobsite. Joints shall be staggered on multi layer insulation. Mineral fiber thermal insulating cement shall be mixed with demineralized water when used on stainless steel surfaces. Insulation, jacketing and accessories shall be installed in accordance with MICA Insulation Stds standard plates except where modified herein or on the drawings.

3.1.2 Firestopping

Where pipes and ducts pass through fire walls, fire partitions, above grade floors, and fire rated chase walls, the penetration shall be sealed with fire stopping materials as specified in Section 07840 FIRESTOPPING.

3.1.3 Painting and Finishing

Painting shall be as specified in Section 09900 PAINTING, GENERAL.

3.1.4 Installation of Flexible Cellular Insulation

Flexible cellular insulation shall be installed with seams and joints sealed with a contact adhesive. Flexible cellular insulation shall not be used on surfaces greater than 200 degrees F. Seams shall be staggered when applying multiple layers of insulation. Insulation exposed to weather and not shown to have jacketing shall be protected with two coats of UV resistant finish as recommended by the manufacturer after the adhesive is dry.

3.1.5 Welding

No welding shall be done on piping, duct or equipment without written approval of the Contracting Officer. The capacitor discharge welding process may be used for securing metal fasteners to duct.

3.1.6 Pipes/Ducts/Equipment which Require Insulation

Insulation is required, unless stated otherwise, on all pipes, ducts, or equipment, which operate at or below 60 F and at or above 80 F.

3.2 PIPE INSULATION INSTALLATION

3.2.1 Pipe Insulation

3.2.1.1 General

Pipe insulation shall be installed on aboveground hot and cold pipeline systems as specified below to form a continuous thermal retarder, including straight runs, fittings and appurtenances unless specified otherwise. Installation shall be with full length units of insulation and using a single cut piece to complete a run. Cut pieces or scraps abutting each other shall not be used. Pipe insulation shall be omitted on the following:

a. Pipe used solely for fire protection.

b. Chromium plated pipe to plumbing fixtures. However, fixtures for use by the physically handicapped shall have the hot water supply and drain, including the trap, insulated where exposed.

c. Sanitary drain lines.

d. Air chambers.

3.2.1.2 Pipes Passing Through Walls, Roofs, and Floors

a. Pipe insulation need not be continuous through the sleeve.

b. An aluminum jacket with factory applied moisture retarder shall be provided over the insulation wherever penetrations require sealing.

c. Where penetrating interior walls, the aluminum jacket shall extend 2 inches beyond either side of the wall and shall be secured on each end with a band.

d. Where penetrating floors, the aluminum jacket shall extend from a point below the backup material to a point 10 inches above the floor with one band at the floor and one not more than 1 inch from the end of the aluminum jacket.

e. Where penetrating waterproofed floors, the aluminum jacket shall extend from below the backup material to a point 2 inchesabove the flashing with a band 1 inch from the end of the aluminum jacket.

f. Where penetrating exterior walls, the aluminum jacket required for pipe exposed to weather shall continue through the sleeve to a point 2 inches beyond the interior surface of the wall.

g. Where penetrating roofs, pipe shall be insulated as required for interior service to a point flush with the top of the flashing and sealed with vapor retarder coating. The insulation for exterior application shall butt tightly to the top of flashing and interior insulation. The exterior aluminum jacket shall extend 2 inches down beyond the end of the insulation to form a counter flashing. The flashing and counter flashing shall be sealed underneath with caulking.

h. For hot water pipes supplying lavatories or other similar heated service which requires insulation, the insulation shall be terminated on the backside of the finished wall. The insulation termination shall be protected with two coats of vapor barrier coating with a minimum total thickness of 1/16 inch applied with glass tape embedded between coats (if applicable). The coating shall extend out onto the insulation 2 inches and shall seal the

end of the insulation. Glass tape seams shall overlap 1 inch. Caulk the annular space between the pipe and wall penetration with approved fire stop material. Cover the pipe and wall penetration with a properly sized (well fitting) escutcheon plate. The escutcheon plate shall overlap the wall penetration at least 3/8 inch.

i. For domestic cold water pipes supplying lavatories or other similar cooling service which requires insulation, the insulation shall be terminated on the finished side of the wall (i.e., insulation must cover the pipe throughout the wall penetration). The insulation shall be protected with two coats of vapor barrier coating with a minimum total thickness of 1/16 inch. The coating shall extend out onto the insulation 2 inches and shall seal the end of the insulation. Caulk the annular space between the outer surface of the pipe insulation and the wall penetration with an approved fire stop material having vapor retarder properties. Cover the pipe and wall penetration with a properly sized (well fitting) escutcheon plate. The escutcheon plate shall overlap the wall penetration by at least 3/8 inch.

j. Fire stop material shall be Insta-Fire seal silicone RTV foam (ASTM E-110 or E814, UL 1479) or approved equal.

3.2.1.3 Pipes Passing Through Hangers

a. Insulation, whether hot or cold application, shall be continuous through hangers. All horizontal pipes 2 inchesand smaller shall be supported on hangers with the addition of a Type 40 protection shield to protect the insulation in accordance with MSS SP-69. Whenever insulation shows signs of being compressed, or when the insulation or jacket shows visible signs of distortion at or near the support shield, insulation inserts as specified below for piping larger than 2 inches shall be installed.

b. Horizontal pipes larger than 2 inches at 60 degrees F and above shall be supported on hangers in accordance with MSS SP-69, and Section 15400 PLUMBING, GENERAL PURPOSE.

c. Horizontal pipes larger than 2 inches and below 60 degrees F shall be supported on hangers with the addition of a Type 40 protection shield in accordance with MSS SP-69. An insulation insert of cellular glass or calcium silicate [or perlite (above (80 F))]shall be installed above each shield. The insert shall cover not less than the bottom 180 degree arc of the pipe. Inserts shall be the same thickness as the insulation, and shall extend 2 inches on each end beyond the protection shield. When insulation inserts are required per the above, and the insulation thickness is less than 1 inch, wooden or cork dowels or blocks may be installed between the pipe and the shield to prevent the weight of the pipe from crushing the insulation, as an option to installing insulation inserts. The insulation jacket shall be continuous over the wooden dowel, wooden block, or insulation insert.

d. Vertical pipes shall be supported with either Type 8 or Type 42 riser clamps with the addition of two Type 40 protection shields in accordance with MSS SP-69 covering the 360 degree arc of the insulation. An insulation insert of cellular glass or calcium

silicate shall be installed between each shield and the pipe. The insert shall cover the 360 degree arc of the pipe. Inserts shall be the same thickness as the insulation, and shall extend 2 inches on each end beyond the protection shield. When insulation inserts are required per the above, and the insulation thickness is less than 1 inch, wooden or cork dowels or blocks may be installed between the pipe and the shield to prevent the hanger from crushing the insulation, as an option instead of installing insulation inserts. The insulation jacket shall be continuous over the wooden dowel, wooden block, or insulation insert. The vertical weight of the pipe shall be supported with hangers located in a horizontal section of the pipe. When the pipe riser is longer than 30 feet, the weight of the pipe shall be additionally supported with hangers in the vertical run of the pipe which are directly clamped to the pipe, penetrating the pipe insulation. These hangers shall be insulated and the insulation jacket sealed as indicated herein for anchors in a similar service.

e. Inserts shall be covered with a jacket material of the same appearance and quality as the adjoining pipe insulation jacket, shall overlap the adjoining pipe jacket 1-1/2 inches, and shall be sealed as required for the pipe jacket. The jacket material used to cover inserts in flexible cellular insulation shall conform to ASTM C 1136, Type 1, and is allowed to be of a different material than the adjoining insulation material.

3.2.1.4 Flexible Cellular Pipe Insulation

Flexible cellular pipe insulation shall be tubular form for pipe sizes 6 inches and less. Type II sheet insulation used on pipes larger than 6 inches shall not be stretched around the pipe. On pipes larger than 12 inches, adhere insulation directly to the pipe on the lower 1/3 of the pipe. Seams shall be staggered when applying multiple layers of insulation. Sweat fittings shall be insulated with miter-cut pieces the same size as on adjacent piping. Screwed fittings shall be insulated with sleeved fitting covers fabricated from miter-cut pieces and shall be overlapped and sealed to the adjacent pipe insulation.

3.2.1.5 Pipes in high abuse areas.

In high abuse areas such as janitor closets and traffic areas in equipment rooms, kitchens, and mechanical rooms, welded PVC jackets shall be utilized. Pipe insulation to the 6 foot level shall be protected.

3.2.2 Aboveground Cold Pipelines

The following cold pipelines shall be insulated per Table I minus 30 degrees to plus 60 degrees F:

a. Domestic cold and chilled drinking water.

b. Horizontal and vertical portions of interior roof drains.

c. Refrigerant suction lines.

d. HVAC hot water.

e. Air conditioner condensate drains.

f. Exposed lavatory drains, exposed domestic water piping and drains

to areas for handicap personnel.

3.2.2.1 Insulation Thickness

Insulation thickness for cold pipelines shall be determined using Table I.

Table I - Cold Piping Insulation Thickness
Pipe Size (inches)

Type of Service	Material	Runouts up to 2 in*	1 in & less	1.25 - 2 in	2.5 - 4 in	5 - 6 in	8 in & larger
Refrigerant suction piping	CG		1.5	1.5	1.5	1.5	1.5
	FC		1.0	1.0	1.0	1.0	1.0
	PF		1.0	1.0	1.0	1.0	1.0
Cold domestic water, above and below ceilings & makeup water	CG	1.5	1.5	1.5	1.5	1.5	1.5
	FC	3/8	3/8	3/8	3/8	3/8	3/8
	PF	1.0	1.0	1.0	1.0	1.0	1.0
Exposed lavatory drains exposed domestic water piping & drains to areas for handicap personnel	FC	0.5	0.5	0.5	0.5	3/4	3/4
	MF	0.5	1.0	1.0	1.5	1.5	1.5
Horizontal & vertical roof drain leaders (including underside of roof drain fitting)	FC		0.5	0.5	0.5	0.5	0.5
	PF		1.0	1.0	1.0	1.0	1.0
	CG		1.5	1.5	1.5	1.5	1.5
Air conditioning condensate drain located inside building	FC		3/8	0.5	0.5	N/A	N/A
	PF		1.0	1.0	1.0	N/A	N/A

*When runouts to terminal units exceed 12 feet, the entire length of runout shall be insulated like main feed pipe.

LEGEND:

PF - Phenolic Foam
CG - Cellular Glass
CS - Calcium Silicate
MF - Mineral Fiber
FC - Flexible Cellular

3.2.2.2 Jacket for Mineral Fiber, Cellular Glass, and Phenolic Foam Insulated Pipe

Insulation shall be covered with a factory applied vapor retarder jacket or field applied seal welded PVC jacket. Insulation inside the building shown to be protected with an aluminum jacket shall have the insulation and vapor retarder jacket installed as specified herein. The aluminum jacket shall be installed as specified for piping exposed to weather, except sealing of the laps of the aluminum jacket is not required. In high abuse areas such as janitor closets and traffic areas in equipment rooms, kitchens, and mechanical rooms, aluminum jackets shall be utilized. Pipe insulation to the 6 ft level will be protected.

3.2.2.3 Insulation for Straight Runs (Mineral Fiber, Cellular Glass and Phenolic Foam)

a. Insulation shall be applied to the pipe with joints tightly butted. Insulation shall have all joints and ends sealed with vapor retarder coating.

b. Longitudinal laps of the jacket material shall overlap not less than 1-1/2 inches. Butt strips 3 inches wide shall be provided for circumferential joints.

c. Laps and butt strips shall be secured with adhesive and stapled on 4 inch centers if not factory self-sealing. If staples are used, they shall be sealed per paragraph 3.2.2.3 e.

d. Factory self-sealing lap systems may be used when the ambient temperature is between 40 degrees and 120 degrees F during installation. The lap system shall be installed in accordance with manufacturer's recommendations. Stapler shall be used only if specifically recommended by the manufacturer. Where gaps occur, the section shall be replaced or the gap repaired by applying adhesive under the lap and then stapling.

e. All Staples, including those used to repair factory self-seal lap systems, shall be coated with a vapor retarder coating. All seams, except those on factory self-seal systems shall be coated with vapor retarder coating. Staples shall not be used for cold water piping.

f. Breaks and punctures in the jacket material shall be patched by wrapping a strip of jacket material around the pipe and securing it with adhesive, stapling, and coating with vapor retarder coating. The patch shall extend not less than 1-1/2 inches past the break.

g. At penetrations such as thermometers, the voids in the insulation shall be filled and sealed with vapor retarder coating.

3.2.2.4 Insulation for Fittings and Accessories

a. Pipe insulation shall be terminated 6 inches from each flange, union, valve, anchor, or fitting in all directions. The ends of the insulation shall be coated with vapor retarder coating.

b. Precut, preformed insulation for placement over fittings, flanges, unions, valves, anchors, and mechanical couplings shall conform to MICA plates: 5 for anchors; 10, 11, 12, & 13 for fittings; 14, 15, & 16 for valves; 17 for flanges and unions; and 18 for couplings. Precut, preformed insulation shall exhibit the same properties as the adjoining pipe insulation. Where precut/preformed is unavailable, rigid preformed pipe insulation sections may be segmented into the shape required. Insulation of the same thickness and conductivity as the adjoining pipe insulation shall be used. If nesting size insulation is used, the insulation shall be overlapped 2 inches or one pipe diameter. Loose fill mineral fiber or insulating cement shall be used to fill the voids. Elbows insulated using segments shall conform to MICA Tables 12.20 "Mitered Insulation Elbow'.

c. Upon completion of insulation installation on flanges, unions, valves, anchors, fittings and accessories, terminations and insulation not protected by factory vapor retarder jackets or PVC fitting covers shall be protected with two coats of vapor retarder coating with a minimum total thickness of 1/16 inch, applied with glass tape embedded between coats. Tape seams shall overlap 1 inch.The coating shall extend out onto the adjoining pipe insulation 2 inches.

d. Anchors attached directly to the pipe shall be insulated for a sufficient distance to prevent condensation but not less than 6 inches from the insulation surface.

e. Flexible connections at pumps and other equipment shall be insulated with 0.5 inch flexible cellular insulation, unless otherwise indicated.

f. Insulation shall be marked showing the location of unions, strainers, and check valves.

3.2.2.5 Optional PVC Fitting Covers

At the option of the Contractor, premolded, one or two piece PVC fitting covers may be used in lieu of the vapor retarder and embedded glass tape. Factory premolded insulation segments shall be used under the fitting covers for elbows. Insulation segments shall be the same thickness as adjoining pipe insulation and the insulation shall be protected with one coat of vapor retarder coating under the PVC cover. The covers shall be secured by PVC vapor retarder tape, adhesive, seal-welding or with tacks made for securing PVC covers. Seams in the cover, and tacks and laps to adjoining pipe insulation jacket, shall be sealed with vapor retarder tape to ensure that the assembly has a continuous vapor seal.

3.2.3 Aboveground Hot Pipelines

The following hot pipelines above 60 degrees F shall be insulated per Table II:

a. Domestic hot water supply & recirculating system.

b. Hot water heating.

3.2.3.1 Insulation Thickness

Insulation thickness for hot pipelines shall be determined using Table II.

LEGEND:

PF - Phenolic Foam
CG - Cellular Glass
CS - Calcium Silicate
MF - Mineral Fiber
FC - Flexible Cellular
PL - Perlite

Table II - Hot Piping Insulation Thickness
Pipe Size (inches)

Type of Service (degrees F)	Material	Runouts up to 2 in *	1 in & less	1.25 - 2 in	2.5 - 4 in	5 - 6 in	8 in & larger
Heating hot	CG	1.5	1.5	2.0	2.0	2.5	3.0
water, supply	PF	0.5	1.0	1.0	1.0	1.0	1.5
& return, &	MF	0.5	1.5	1.5	2.0	2.5	3.0
Heating oil (250 F max	CS	1.0	1.5	2.0	2.5	2.5	3.0

* When runouts to terminal units exceed 12 feet, the entire length of runout shall be insulated like the main feed pipe.

** Applies to recirculating sections of service or domestic hot water systems and first 8 feet from storage tank for non-recirculating systems.

3.2.3.2 Jacket for Insulated Hot Pipe

Insulation shall be covered, in accordance with manufacturer's recommendations, with a factory applied Type II jacket or field applied aluminum where required or seal welded PVC.

3.2.3.3 Insulation for Straight Runs

a. Insulation shall be applied to the pipe with joints tightly butted.

b. Longitudinal laps of the jacket material shall overlap not less than 1-1/2 inches, and butt strips 3 inches wide shall be provided for circumferential joints.

c. Laps and butt strips shall be secured with adhesive and stapled on 4 inch centers if not factory self-sealing. Adhesive may be omitted where pipe is concealed.

d. Factory self-sealing lap systems may be used when the ambient temperature is between 40 degrees and 120 degrees F and shall be installed in accordance with manufacturer's instructions. Laps and butt strips shall be stapled whenever there is nonadhesion of the system. Where gaps occur, the section shall be replaced or the gap repaired by applying adhesive under the lap and then stapling.

e. Breaks and punctures in the jacket material shall be patched by either wrapping a strip of jacket material around the pipe and securing with adhesive and staple on 4 inch centers (if not factory self-sealing), or patching with tape and sealing with a brush coat of vapor retarder coating. Adhesive may be omitted where pipe is concealed. Patch shall extend not less than 1-1/2 inches past the break.

f. Flexible cellular pipe insulation shall be installed by slitting tubular sections and applying onto piping or tubing. Alternately, whenever possible, slide unslit sections over the open ends of piping or tubing. All seams and butt joints shall be secured and sealed with adhesive. When using self seal products only the butt joints shall be secured with adhesive. Insulation shall be pushed on the pipe, never pulled. Stretching of insulation may result in open seams and joints. All edges shall be clean cut. Rough or jagged edges of the insulation shall not be permitted. Proper tools such as sharp knives shall be used. Type II sheet insulation when used on pipe larger than 6 inches shall not be stretched around the pipe. On pipes larger than 12 inches, adhere sheet insulation directly to the pipe on the lower 1/3 of the pipe.

3.2.3.4 Insulation for Fittings and Accessories

a. The run of the line pipe insulation shall have the ends brought up to the item.

b. Insulation of the same thickness and conductivity as the adjoining pipe insulation, either premolded or segmented, shall be placed around the item abutting the adjoining pipe insulation, or if nesting size insulation is used, overlapping 2 inches or one pipe diameter. Loose fill mineral fiber or insulating cement shall be used to fill the voids. Insulation for elbows less than 3 inch size shall be premolded. Insulation for elbows 3 inch size and larger shall be either premolded or segmented. Elbows insulated using segments shall have not less than 3 segments per elbow. Insulation may be wired or taped on until finish is applied.

c. Upon completion of installation of insulation on flanges, unions, valves, anchors, fittings and accessories, terminations and insulation not protected by factory vapor retarder jackets or PVC fitting covers shall be protected with two coats of adhesive applied with glass tape embedded between coats. Tape seams shall overlap 1 inch. Adhesive shall extend onto the adjoining insulation not less than 2 inches. The total dry film thickness shall be not less than 1/16 inch.

d. Insulation terminations shall be tapered to unions at a 45-degree angle.

e. At the option of the Contractor, factory premolded one- or two-piece PVC fitting covers may be used in lieu of the adhesive and embedded glass tape. Factory premolded segments or factory or field cut blanket insert insulation segments shall be used under the cover and shall be the same thickness as adjoining pipe insulation. The covers shall be secured by PVC vapor retarder tape, adhesive, seal-welding or with tacks made for securing PVC covers.

3.2.4 Piping Exposed to Weather

Piping exposed to weather shall be insulated and jacketed as specified for the applicable service inside the building. After this procedure, an aluminum jacket or PVC jacket shall be applied. PVC jacketing requires no factory applied jacket beneath it, however an all service jacket shall be applied if factory applied jacketing is not furnished. Flexible cellular insulation exposed to weather shall be treated in accordance with paragraph INSTALLATION OF FLEXIBLE CELLULAR INSULATION.

3.2.4.1 Aluminum Jacket

The jacket for hot piping may be factory applied. The jacket shall overlap not less than 2 inches at longitudinal and circumferential joints and shall be secured with bands at not more than 12 inch centers. Longitudinal joints shall be overlapped down to shed water and located at 4 or 8 o'clock positions. Joints on piping 60 degrees F and below shall be sealed with caulking while overlapping to prevent moisture penetration. Where jacketing on piping 60 degrees F and below abuts an uninsulated surface, joints shall be caulked to prevent moisture penetration. Joints on piping above 60 degrees F shall be sealed with a moisture retarder.

3.2.4.2 Insulation for Fittings

Flanges, unions, valves, fittings, and accessories shall be insulated and finished as specified for the applicable service. Two coats of breather emulsion type weatherproof mastic (impermeable to water, permeable to air) recommended by the insulation manufacturer shall be applied with glass tape embedded between coats. Tape overlaps shall be not less than 1 inch and the adjoining aluminum jacket not less than 2 inches. Factory preformed aluminum jackets may be used in lieu of the above. Molded PVC fitting covers shall be used with PVC lagging and adhesive welded weather tight.

3.2.4.3 PVC Lagging

PVC lagging shall be ultraviolet resistant and adhesive welded weather tight with manufacturer's recommended adhesive. Installation shall include provision for thermal expansion.

3.2.5 Not Used
3.2.5.1 Not Used.
3.2.5.2 Not Used

3.3 DUCT INSULATION INSTALLATION

3.3.1 Duct Insulation Thickness

Duct insulation thickness shall be in accordance with Table III.

Table III - Minimum Duct Insulation (inches)

Cold Air Ducts	2.0
Relief Ducts	1.5
Fresh Air Intake Ducts	1.5
Warm Air Ducts	2.0
Relief Ducts	1.5
Fresh Air Intake Ducts	2.0

3.3.2 Insulation and Vapor Retarder for Cold Air Duct

Insulation and vapor retarder for cold air duct below 60 degrees F, ducts and associated equipment shall be insulated to a thickness which is in accordance with Table III. The following shall be insulated:

a. Supply ducts.

Insulation for rectangular ducts shall be flexible type where concealed, minimum density 3/4 pcf and rigid type where exposed, minimum density 3 pcf. Insulation for round/oval ducts shall be flexible type, minimum density 3/4 pcf with a factory Type I or II jacket; or, a semi rigid board, minimum density 3 pcf, formed or fabricated to a tight fit, edges beveled and joints tightly butted and staggered, with a factory applied Type I or II all service jacket. Insulation for exposed ducts shall be provided with either a white, paintable, factory-applied Type I jacket or a vapor retarder jacket coating finish as specified. Insulation on concealed duct shall be provided with a factory-applied Type I or II vapor retarder jacket. The total dry film thickness shall be approximately 1/16 inch. Duct insulation shall be continuous through sleeves and prepared openings except fire wall penetrations. Duct insulation terminating at fire dampers, shall be continuous over the damper collar and retaining angle of fire dampers, which are exposed to unconditioned air and which may be prone to condensate formation. Duct insulation and vapor retarder shall cover the collar, neck, and any uninsulated surfaces of diffusers, registers and grills. Vapor retarder materials shall be applied to form a complete unbroken vapor seal over the insulation. Sheet Metal Duct shall be sealed in accordance with CEGS 15895 AIR SUPPLY, DISTRIBUTION, VENTILATION, AND EXHAUST SYSTEM.

3.3.2.1 Installation on Concealed Duct

a. For rectangular, oval or round ducts, insulation shall be attached in accordance with MICA installation procedures.

b. For rectangular and oval ducts, 24 inches and larger insulation shall be additionally secured to bottom of ducts by the use of mechanical fasteners. Fasteners shall be spaced on 16 inch centers and not more than 16 inches from duct corners.

c. For rectangular, oval and round ducts, mechanical fasteners shall be provided on sides of duct risers for all duct sizes. Fasteners shall be spaced on 16 inch centers and not more than 16 inches from duct corners.

d. Insulation shall be impaled on the mechanical fasteners (self stick pins) where used and shall be pressed thoroughly into the adhesive. Care shall be taken to ensure vapor retarder jacket joints overlap 2 inches. The insulation shall not be compressed to a thickness less than that specified. Insulation shall be carried over standing seams and trapeze-type duct hangers.

e. Self-locking washers shall be installed where mechanical fasteners are used. The pin shall be trimmed back and bent over.

f. Jacket overlaps shall be secured with staples and tape as necessary to ensure a secure seal. Staples, tape and seams shall be coated with a brush coat of vapor retarder coating.

g. Breaks in the jacket material shall be covered with patches of the same material as the vapor retarder jacket. The patches shall extend not less than 2 inches beyond the break or penetration in all directions and shall be secured with tape and staples. Staples and tape joints shall be sealed with a brush coat of vapor retarder coating.

h. At jacket penetrations such as hangers, thermometers, and damper operating rods, voids in the insulation shall be filled and the penetration sealed with a brush coat of vapor retarder coating.

i. Insulation terminations and pin punctures shall be sealed and flashed with a reinforced vapor retarder coating finish or tape with a brush coat of vapor retarder coating.. The coating shall overlap the adjoining insulation and uninsulated surface 2 inches. Pin puncture coatings shall extend 2 inches from the puncture in all directions.

j. Where insulation standoff brackets occur, insulation shall be extended under the bracket and the jacket terminated at the bracket.

3.3.2.2 Not used

3.3.3 Insulation for Warm Air Duct

For warm air ducts above 60 degrees F, ducts and associated equipment shall be insulated to a thickness which is in accordance with Table III. The following shall be insulated:

a. Supply ducts.

Insulation for rectangular ducts shall be flexible type where concealed, minimum density 3/4 pcf; and rigid type where exposed, minimum density 3 pcf. Insulation on exposed ducts shall be provided with a white, paintable, factory-applied Type II jacket, or finished with adhesive finish. Flexible type insulation shall be used for round ducts, minimum density 3/4 pcf with a factory-applied Type II jacket. Insulation on concealed duct shall be provided with a factory-applied Type II jacket. Adhesive finish where indicated to be used shall be accomplished by applying two coats of adhesive with a layer of glass cloth embedded between the coats. The total dry film thickness shall be approximately 1/16 inch. Duct insulation shall be continuous through sleeves and prepared openings. Duct insulation shall terminate at fire dampers and flexible connections.

3.3.3.1 Installation on Concealed Duct

a. For rectangular, oval and round ducts, insulation shall be attached by applying adhesive around the entire perimeter of the duct in 6 inch wide strips on 12 inch centers.

b. For rectangular and oval ducts 24 inches and larger, insulation shall be secured to the bottom of ducts by the use of mechanical fasteners. Fasteners shall be spaced on 18 inch centers and not more than 18 inches from duct corner.

c. For rectangular, oval and round ducts, mechanical fasteners shall be provided on sides of duct risers for all duct sizes. Fasteners shall be spaced on 18 inch centers and not more than 18 inches from duct corners.

d. The insulation shall be impaled on the mechanical fasteners where used. The insulation shall not be compressed to a thickness less than that specified. Insulation shall be carried over standing seams and trapeze-type hangers.

e. Self-locking washers shall be installed where mechanical fasteners are used and the pin trimmed and bent over.

f. Insulation jacket shall overlap not less than 2 inches at joints and the lap shall be secured and stapled on 4 inch centers.

3.3.3.2 Not Used

3.3.4 Ducts Handling Air for Dual Purpose

For air handling ducts for dual purpose below and above 60 degrees F, ducts shall be insulated as specified for cold air duct.

3.3.5 Not Used

3.3.6 Duct Test Holes

After duct systems have been tested, adjusted, and balanced, breaks in the insulation and jacket shall be repaired in accordance with the applicable section of this specification for the type of duct insulation to be repaired.

3.3.7 Not Used

3.4 Not Used

3.4.1 Not Used

3.4.2 Not Used

3.4.2.1 Not Used

3.4.2.1 Not Used

3.4.2.2 Not Used

3.4.2.3 Not Used

3.4.3 Not Used

3.4.3.1 Not Used

3.4.3.2 Not Used

3.4.3.3 Not Used

3.4.4 Not Used

3.4.5 Not Used

-- End of Section --

This page was intentionally left blank for duplex printing.

SECTION TABLE OF CONTENTS

DIVISION 15 - MECHANICAL

SECTION 15400

PLUMBING, GENERAL PURPOSE

08/94

PART 1 GENERAL

1.1 REFERENCES
1.2 STANDARD PRODUCTS
1.3 PERFORMANCE REQUIREMENTS
1.3.1 Welding
1.3.2 Not Used
1.4 ELECTRICAL WORK
1.5 SUBMITTALS
1.6 REGULATORY REQUIREMENTS
1.7 PROJECT/SITE CONDITIONS

PART 2 PRODUCTS

2.1 MATERIALS
2.1.1 Pipe Joint Materials
2.1.2 Miscellaneous Materials
2.1.3 Pipe Insulation Material
2.2 PIPE HANGERS, INSERTS, AND SUPPORTS
2.3 VALVES
2.3.1 Backwater Valves
2.3.2 Wall Faucets
2.3.3 Wall Hydrants
2.3.4 Lawn Faucets
2.3.5 Yard Hydrants
2.3.6 Relief Valves
2.3.7 Thermostatic Mixing Valves
2.4 FIXTURES
2.4.1 Lavatories
2.5 Not Used
2.6 DRAINS
2.6.1 Floor and Shower Drains
2.6.1.1 Metallic Shower Pan Drains
2.6.1.2 Drains and Backwater Valves
2.6.2 Not Used
2.6.3 Hub Drains
2.6.4
2.6.5 Not Used
2.6.6 Not Used
2.6.7 Roof Drains and Expansion Joints
2.7 SHOWER PAN
2.7.1 Sheet Copper
2.7.2 Plasticized Polyvinyl Chloride Shower Pan Material
2.7.3 Nonplasticized Polyvinyl Chloride (PVC) Shower Pan Material
2.8 TRAPS

PART 3 EXECUTION

3.1 GENERAL INSTALLATION REQUIREMENTS
3.1.1 Water Pipe, Fittings, and Connections
3.1.1.1 Utilities
3.1.1.2 Cutting and Repairing
3.1.1.3 Protection of Fixtures, Materials, and Equipment
3.1.1.4 Mains, Branches, and Runouts
3.1.1.5 Pipe Drains
3.1.1.6 Expansion and Contraction of Piping
3.1.1.7 Commercial-Type Water Hammer Arresters
3.1.2 Not Used
3.1.3 Joints
3.1.3.1 Threaded
3.1.3.2 Mechanical Couplings
3.1.3.3 Union and Flanged
3.1.3.4 Cast Iron Soil, Waste and Vent Pipe
3.1.3.5 Copper Tube and Pipe
3.1.3.6 Plastic Pipe
3.1.3.7 Not Used
3.1.3.8 Not Used
3.1.3.9 Other Joint Methods
3.1.4 Dissimilar Pipe Materials
3.1.5 Corrosion Protection for Buried Pipe and Fittings
3.1.5.1 Cast Iron and Ductile Iron
3.1.5.2 Steel
3.1.6 Pipe Sleeves and Flashing
3.1.6.1 Sleeve Requirements
3.1.6.2 Flashing Requirements
3.1.6.3 Waterproofing
3.1.6.4 Optional Counterflashing
3.1.6.5 Pipe Penetrations of Slab on Grade Floors
3.1.7 Fire Seal
3.1.8 Supports
3.1.8.1 General
3.1.8.2
3.1.8.3 Pipe Hangers, Inserts, and Supports
3.1.9 Welded Installation
3.1.10 Pipe Cleanouts
3.2 Not used
3.2.1 Not Used
3.3 FIXTURES AND FIXTURE TRIMMINGS
3.3.1 Fixture Connections
3.3.2 Flushometer Valves
3.3.3 Height of Fixture Rims Above Floor
3.3.4 Shower Bath Outfits
3.3.5 Fixture Supports
3.3.5.1 Support for Solid Masonry Construction
3.3.5.2 Support for Cellular-Masonry Wall Construction
3.3.5.3 Support for Steel Stud Frame Partitions
3.3.5.4 Support for Wood Stud Construction
3.3.5.5 Wall-Mounted Water Closet Gaskets
3.3.6 Not Used
3.3.7 Access Panels
3.3.8 Sight Drains
3.3.9 Traps
3.4 Not Used
3.5 Not Used
3.6 IDENTIFICATION SYSTEMS

3.6.1 Identification Tags
3.6.2 Color Coding
3.6.3 Color Coding Scheme for Hidden Utility Components
3.7 ESCUTCHEONS
3.8 PAINTING
3.9 TESTS, FLUSHING AND DISINFECTION
3.9.1 Plumbing System
3.9.1.1 Not Used
3.9.1.2 Not Used
3.9.2 Defective Work
3.9.3 System Flushing
3.9.4 Operational Test
3.9.5 Disinfection
3.10 PLUMBING FIXTURE SCHEDULE
3.11 POSTED INSTRUCTIONS
3.12 Not Used
3.13 TABLES

-- End of Section Table of Contents --

SECTION 15400

PLUMBING, GENERAL PURPOSE
08/94

PART 1 GENERAL

1.1 REFERENCES

The publications listed below form a part of this specification to the extent referenced. The publications are referred to in the text by basic designation only.

AMERICAN NATIONAL STANDARDS INSTITUTE (ANSI)

ANSI Z21.22	(1986; Z21.22a) Relief Valves and Automatic Gas Shutoff Devices for Hot Water Supply Systems

AMERICAN SOCIETY FOR TESTING AND MATERIALS (ASTM)

ASTM A 47	(1990; R 1995) Ferritic Malleable Iron Castings
ASTM A 47M	(1990; R 1996) Ferritic Malleable Iron Castings
ASTM A 53	(1997) Pipe, Steel, Black and Hot-Dipped, Zinc-Coated, Welded and Seamless
ASTM A 74	(1996) Cast Iron Soil Pipe and Fittings
ASTM A 105/A 105M	(1996) Carbon Steel Forgings for Piping Applications
ASTM A 183	(1983; R 1990) Carbon Steel Track Bolts and Nuts
ASTM A 193/A 193M	(1997a) Alloy-Steel and Stainless Steel Bolting Materials for High-Temperature Service
ASTM A 516/A 516M	(1990; R 1996) Pressure Vessel Plates, Carbon Steel, for Moderate- and Lower-Temperature Service
ASTM A 518	(1992; R 1997) Corrosion-Resistant High-Silicon Iron Castings
ASTM A 518M	(1992; R 1997) Corrosion-Resistant High-Silicon Iron Castings (Metric)
ASTM A 536	(1984; R 1993) Ductile Iron Castings

ASTM A 733	(1993) Welded and Seamless Carbon Steel and Austenitic Stainless Steel Pipe Nipples
ASTM A 888	(1996) Hubless Cast Iron Soil Pipe and Fittings for Sanitary and Storm Drain, Waste, and Vent Piping Applications
ASTM B 32	(1996) Solder Metal
ASTM B 42	(1996) Seamless Copper Pipe, Standard Sizes
ASTM B 75	(1995a) Seamless Copper Tube
ASTM B 88	(1996) Seamless Copper Water Tube
ASTM B 88M	(1996) Seamless Copper Water Tube (Metric)
ASTM B 306	(1996) Copper Drainage Tube (DWV)
ASTM B 641	(1993) Seamless and Welded Copper Distribution Tube (Type D)
ASTM B 813	(1993) Liquid and Paste Fluxes for Soldering Applications of Copper and Copper Alloy Tube
ASTM B 828	(1992) Making Capillary Joints by Soldering of Copper and Copper Alloy Tube and Fittings
ASTM C 564	(1995a) Rubber Gaskets for Cast Iron Soil Pipe and Fittings
ASTM C 920	(1995) Elastomeric Joint Sealants
ASTM D 638	(1996) Tensile Properties of Plastics
ASTM D 638M	(1996) Tensile Properties of Plastics (Metric)
ASTM D 1248	(1984; R 1989) Polyethylene Plastics Molding and Extrusion Materials
ASTM D 1785	(1996a) Poly(Vinyl Chloride) (PVC) Plastic Pipe, Schedules 40, 80, and 120
ASTM D 2235	(1996a) Solvent Cement for Acrylonitrile-Butadiene-Styrene (ABS)

	Plastic Pipe and Fittings
ASTM D 2447	(1995) Polyethylene (PE) Plastic Pipe, Schedules 40 and 80, Based on Outside Diameter
ASTM D 2466	(1996a) Poly(Vinyl Chloride) (PVC) Plastic Pipe Fittings, Schedule 40
ASTM D 2467	(1996a) Poly(Vinyl Chloride) (PVC) Plastic Pipe Fittings, Schedule 80
ASTM D 2564	(1996a) Solvent Cements for Poly(Vinyl Chloride) (PVC) Plastic Piping Systems
ASTM D 2661	(1996) Acrylonitrile-Butadiene-Styrene (ABS) Schedule 40 Plastic Drain, Waste, and Vent Pipe and Fittings
ASTM D 2665	(1996) Poly(Vinyl Chloride) (PVC) Plastic Drain, Waste, and Vent Pipe and Fittings
ASTM D 2672	(1996a) Joints for IPS PVC Pipe Using Solvent Cement
ASTM D 2683	(1995) Socket-Type Polyethylene Fittings for Outside Diameter-Controlled Polyethylene Pipe and Tubing
ASTM D 2737	(1996a) Polyethylene (PE) Plastic Tubing
ASTM D 2846	(1996) Chlorinated Poly(Vinyl Chloride) (CPVC) Plastic Hot- and Cold-Water Distribution Systems
ASTM D 2855	(1996) Making Solvent-Cemented Joints with Poly(Vinyl Chloride) (PVC) Pipe and Fittings
ASTM D 3138	(1995) Solvent Cements for Transition Joints Between Acrylonitrile-Butadiene-Styrene (ABS) and Poly(Vinyl Chloride) (PVC) Non-Pressure Piping Components
ASTM D 3139	(1996a) Joints for Plastic Pressure Pipes Using Flexible Elastomeric Seals

ASTM D 3212	(1996a) Joints for Drain and Sewer Plastic Pipes Using Flexible Elastomeric Seals
ASTM D 3308	(1991a) PTFE Resin Skived Tape
ASTM D 3311	(1994) Drain, Waste, and Vent (DWV) Plastic Fittings Patterns
ASTM D 4551	(1996) Poly(Vinyl Chloride) (PVC) Plastic Flexible Concealed Water-Containment Membrane
ASTM E 1	(1995) ASTM Thermometers
ASTM E 96	(1995) Water Vapor Transmission of Materials
ASTM F 409	(1995) Thermoplastic Accessible and Replaceable Plastic Tube and Tubular Fittings
ASTM F 437	(1993) Threaded Chlorinated Poly(Vinyl Chloride) (CPVC) Plastic Pipe Fittings, Schedule 80
ASTM F 438	(1993) Socket-Type Chlorinated Poly(Vinyl Chloride) (CPVC) Plastic Pipe Fittings, Schedule 40
ASTM F 439	(1993a) Socket-Type Chlorinated Poly(Vinyl Chloride) (CPVC) Plastic Pipe Fittings, Schedule 80
ASTM F 441	(1995) Chlorinated Poly(Vinyl Chloride) (CPVC) Plastic Pipe, Schedules 40 and 80
ASTM F 442	(1994) Chlorinated Poly(Vinyl Chloride) (CPVC) Plastic Pipe (SDR-PR)
ASTM F 477	(1995) Elastomeric Seals (Gaskets) for Joining Plastic Pipe
ASTM F 493	(1993a) Solvent Cements for Chlorinated Poly(Vinyl Chloride) (CPVC) Plastic Pipe and Fittings
ASTM F 628	(1995) Acrylonitrile-Butadiene-Styrene (ABS) Schedule 40 Plastic Drain, Waste, and Vent Pipe with a Cellular Core
ASTM F 891	(1993a) Coextruded Poly(Vinyl Chloride) (PVC) Plastic Pipe with a Cellular Core

ASTM F 1760	(1996) Poly(Vinyl Chloride) (PVC) Non-Pressure Plastuc Pipe Having Reprocessed-Recycled Content.

ASME INTERNATIONAL (ASME)

ASME A112.6.1M	(1997) Supports for Off-the-Floor Plumbing Fixtures for Public Use
ASME A112.14.1	(1975; R 1990) Backwater Valves
ASME A112.19.1M	(1994) Enameled Cast Iron Plumbing Fixtures
ASME A112.19.2M	(1995; Errata) Vitreous China Plumbing Fixtures
ASME A112.21.1M	(1991) Floor Drains
ASME A112.21.2M	(1983) Roof Drains
ASME A112.36.2M	(1991) Cleanouts
ASME B1.20.1	(1983; R 1992) Pipe Threads, General Purpose (Inch)
ASME B16.3	(1992) Malleable Iron Threaded Fittings
ASME B16.4	(1992) Gray Iron Threaded Fittings
ASME B16.5	(1996) Pipe Flanges and Flanged Fittings NPS 1/2 thru NPS 24
ASME B16.12	(1991) Cast Iron Threaded Drainage Fittings
ASME B16.15	(1985; R 1994) Cast Bronze Threaded Fittings Classes 125 and 250
ASME B16.18	(1984; R 1994) Cast Copper Alloy Solder Joint Pressure Fittings
ASME B16.21	(1992) Nonmetallic Flat Gaskets for Pipe Flanges
ASME B16.22	(1995) Wrought Copper and Copper Alloy Solder Joint Pressure Fittings
ASME B16.23	(1992; Errata Jan 1994) Cast Copper Alloy Solder Joint Drainage Fittings - DWV
ASME B16.24	(1991; Errata) Cast Copper Alloy Pipe Flanges, Class 150, 300, 400, 600, 900, 1500, and 2500, and Flanged Fittings, Class 150 and 300
ASME B16.29	(1994) Wrought Copper and Wrought Copper Alloy Solder Joint Drainage Fittings - DWV
ASME B16.34	(1996) Valves - Flanged, Threaded, and

	Welding End
ASME B16.39	(1986; R 1994) Malleable Iron Threaded Pipe Unions Classes 150, 250, and 300
ASME B40.1	(1991) Gauges - Pressure Indicating Dial Type - Elastic Element

AMERICAN SOCIETY OF SANITARY ENGINEERING (ASSE)

ASSE ANSI/ASSE 1001	(1990) Pipe Applied Atmospheric Type Vacuum Breakers
ASSE ANSI/ASSE 1003	(1995) Water Pressure Reducing Valves for Domestic Water Supply Systems
ASSE 1005	(1986) Water Heater Drain Valves - 3/4-Inch Iron Pipe Size
ASSE 1018	(1986) Trap Seal Primer Valves Water Supply Fed

AMERICAN WATER WORKS ASSOCIATION (AWWA)

AWWA-01	(1995) Standard Methods for the Examination of Water and Wastewater
AWWA B300	(1992) Hypochlorites
AWWA B301	(1992) Liquid Chlorine
AWWA ANSI/AWWA C105/A21.5	(1993) Polyethylene Encasement for Ductile-Iron Pipe Systems
AWWA C203	(1991) Coal-Tar Protective Coatings and Linings for Steel Water Pipelines - Enamel and Tape - Hot-Applied
AWWA C606	(1987) Grooved and Shouldered Joints
AWWA M20	(1973) Manual: Water Chlorination Principles and Practices

AMERICAN WELDING SOCIETY (AWS)

AWS A5.8	(1992) Filler Metals for Brazing and Braze Welding
AWS B2.2	(1991) Brazing Procedure and Performance Qualification

CAST IRON SOIL PIPE INSTITUTE (CISPI)

CISPI 301	(1995) Hubless Cast Iron Soil Pipe and Fittings for Sanitary and Storm Drain, Waste, and Vent Piping Applications

CISPI 310	(1995) Coupling for Use in Connection with Hubless Cast Iron Soil Pipe and Fittings for Sanitary and Storm Drain, Waste, and Vent Piping Applications
CISPI HSN-85	(1985) Neoprene Rubber Gaskets for Hub and Spigot Cast Iron Soil Pipe and Fittings

COPPER DEVELOPMENT ASSOCIATION (CDA)

CDA-02	(1995) Copper Tube Handbook

COUNCIL OF AMERICAN BUILDING OFFICIALS (CABO)

CABO A117.1	(1992; Errata Jun 1993) Accessible and Usable Buildings and Facilities

MANUFACTURERS STANDARDIZATION SOCIETY OF THE VALVE AND FITTINGS INDUSTRY (MSS)

MSS SP-25	(1998) Standard Marking System for Valves, Fittings, Flanges and Unions
MSS SP-44	(1996) Steel PipeLine Flanges
MSS SP-58	(1993) Pipe Hangers and Supports - Materials, Design and Manufacture
MSS SP-67	(1995) Butterfly Valves
MSS SP-69	(1996) Pipe Hangers and Supports - Selection and Application
MSS SP-70	(1990) Cast Iron Gate Valves, Flanged and Threaded Ends
MSS SP-71	(1997) Cast Iron Swing Check Valves, Flanges and Threaded Ends
MSS SP-72	(1992) Ball Valves with Flanged or Butt-Welding Ends for General Service
MSS SP-73	(1991; R 1996) Brazing Joints for Copper and Copper Alloy Pressure Fittings
MSS SP-78	(1987; R 1992) Cast Iron Plug Valves, Flanged and Threaded Ends
MSS SP-80	(1997) Bronze Gate, Globe, Angle and Check Valves
MSS SP-83	(1995) Class 3000 Steel Pipe Unions Socket-Welding and Threaded
MSS SP-85	(1994) Cast Iron Globe & Angle Valves, Flanged and Threaded Ends

MSS SP-110	(1996) Ball Valves Threaded, Socket-Welding, Solder Joint, Grooved and Flared Ends

NATIONAL ASSOCIATION OF PLUMBING-HEATING-COOLING CONTRACTORS (NAPHCC)

NAPHCC-01	(1996) National Standard Plumbing Code

NATIONAL FIRE PROTECTION ASSOCIATION (NFPA)

NFPA 90A	(1996) Installation of Air Conditioning and Ventilating Systems

NSF INTERNATIONAL (NSF)

NSF ANSI/NSF 14	(1996) Plastics Piping Components and Related Materials

PLASTIC PIPE AND FITTINGS ASSOCIATION (PPFA)

PPFA-01	(1991) Plastic Pipe in Fire Resistive Construction

PLUMBING AND DRAINAGE INSTITUTE (PDI)

PDI WH 201	(1992) Water Hammer Arresters

SOCIETY OF AUTOMOTIVE ENGINEERS (SAE)

SAE J 1508	(1996) Hose Clamps

1.2 STANDARD PRODUCTS

Specified materials and equipment shall be standard products of a manufacturer regularly engaged in the manufacture of such products. Specified equipment shall essentially duplicate equipment that has performed satisfactorily at least two years prior to bid opening.

1.3 PERFORMANCE REQUIREMENTS

1.3.1 Welding

[Piping shall be welded in accordance with qualified procedures using performance-qualified welders and welding operators. Procedures and welders shall be qualified in accordance with ASME BPV IX. Welding procedures qualified by others, and welders and welding operators qualified by another employer, may be accepted as permitted by ASME B31.1. The Contracting Officer shall be notified 24 hours in advance of tests, and the tests shall be performed at the work site if practicable. Welders or welding operators shall apply their assigned symbols near each weld they make as a permanent record. Structural members shall be welded in accordance with Section 05055 WELDING, STRUCTURAL.] [Welding and nondestructive testing procedures are specified in Section 05093WELDING PRESSURE PIPING.]

1.3.2 Not Used

1.4 ELECTRICAL WORK

Motors, motor controllers and motor efficiencies shall conform to the requirements of Section 16415 ELECTRICAL WORK, INTERIOR. Electrical motor-driven equipment specified herein shall be provided complete with motors. Equipment shall be rated at 60 Hz, single phase, ac unless otherwise indicated. Where a motor controller is not provided in a motor-control center on the electrical drawings, a motor controller shall be as indicated. Motor controllers shall be provided complete with properly sized thermal-overload protection in each ungrounded conductor, auxiliary contact, and other equipment, at the specified capacity, and including an allowable service factor.

1.5 SUBMITTALS

Government approval is required for submittals with a "GA" designation; submittals having an "FIO" designation are for information only. The following shall be submitted in accordance with Section 01330 SUBMITTAL PROCEDURES:

SD-02 Shop Drawings

Plumbing System; G-AE

Detail drawings consisting of illustrations, schedules, performance charts, instructions, brochures, diagrams, and other information to illustrate the requirements and operations of each system. Detail drawings for the complete plumbing system including piping layouts and locations of connections; dimensions for roughing-in, foundation, and support points; schematic diagrams and wiring diagrams or connection and interconnection diagrams. Detail drawings shall indicate clearances required for maintenance and operation. Where piping and equipment are to be supported other than as indicated, details shall include loadings and proposed support methods. Mechanical drawing plans, elevations, views, and details, shall be drawn to scale.

Electrical Schematics; G-AE

Complete electrical schematic lineless or full line interconnection and connection diagram for each piece of mechanical equipment having more than one automatic or manual electrical control device.

SD-03 Product Data

Welding;

A copy of qualified procedures and a list of names and identification symbols of qualified welders and welding operators.

SD-06 Test Reports

Tests, Flushing and Disinfection ;

Test reports in booklet form showing all field tests performed to adjust each component and all field tests performed to prove compliance with the specified performance criteria, completion and testing of the installed system. Each test report shall indicate

the final position of controls.

Backflow Prevention Assembly Tests; G-AO

Certification of proper operation shall be as accomplished in accordance with state regulations by an individual certified by the state to perform such tests. If no state requirement exists, the Contractor shall have the manufacturer's representative test the device, to ensure the unit is properly installed and performing as intended. The Contractor shall provide written documentation of the tests performed and signed by the individual performing the tests.

SD-07 Certificates

Materials and Equipment; G-AO.

Where materials or equipment are specified to comply with requirements of AGA, or ASME, proof of such compliance. The label or listing of the specified agency will be acceptable evidence. In lieu of the label or listing, a written certificate may be submitted from an approved, nationally recognized testing organization equipped to perform such services, stating that the items have been tested and conform to the requirements and testing methods of the specified agency. Where equipment is specified to conform to requirements of the ASME Boiler and Pressure Vessel Code, the design, fabrication, and installation shall conform to the code.

Bolts; G-AE.

Written certification by the bolt manufacturer that the bolts furnished comply with the specified requirements. The certification shall include illustrations of product-required markings, the date of manufacture, and the number of each type of bolt to be furnished based on this certification.

SD-08 Manufacturer's Instructions

Plumbing System;

Diagrams, instructions, and other sheets proposed for posting. Manufacturer's recommendations for the installation of bell and spigot and hubless joints for cast iron soil pipe.

SD-10 Operation and Maintenance Manuals

Plumbing System; GA1

Six copies of the operation manual outlining the step-by-step procedures required for system startup, operation and shutdown. The manual shall include the manufacturer's name, model number, service manual, parts list, and brief description of all equipment and their basic operating features. Sixcopies of the maintenance manual listing routine maintenance procedures, possible breakdowns and repairs. The manual shall include piping and equipment layout and simplified wiring and control diagrams of the system as installed.

1.6 REGULATORY REQUIREMENTS

Plumbing work shall be in accordance with NAPHCC-01.

1.7 PROJECT/SITE CONDITIONS

The Contractor shall become familiar with details of the work, verify dimensions in the field, and advise the Contracting Officer of any discrepancy before performing any work.

PART 2 PRODUCTS

2.1 MATERIALS

Materials for various services shall be in accordance with TABLES I and II. Pipe schedules shall be selected based on service requirements. Pipe fittings shall be compatible with the applicable pipe materials. Plastic pipe, fittings, and solvent cement shall meet NSF ANSI/NSF 14 and shall be NSF listed for the service intended. Plastic pipe, fittings, and solvent cement used for potable hot and cold water service shall bear the NSF seal "NSF-PW." Polypropylene pipe and fittings shall conform to dimensional requirements of Schedule 40, Iron Pipe size. Pipe threads (except dry seal) shall conform to ASME B1.20.1. Grooved pipe couplings and fittings shall be from the same manufacturer. Material or equipment containing lead shall not be used in any potable water system. Hubless cast-iron soil pipe shall not be installed underground, under concrete floor slabs, or in crawl spaces below kitchen floors. Plastic pipe shall not be installed in air plenums. Plastic pipe shall not be installed in a pressure piping system in buildings greater than three stories including any basement levels.

2.1.1 Pipe Joint Materials

Grooved pipe and hubless cast-iron soil pipe shall not be used under ground. Joints and gasket materials shall conform to the following:

a. Coupling for Cast-Iron Pipe: for hub and spigot type ASTM A 74, AWWA C606. For hubless type: CISPI 310

b. Coupling for Steel Pipe: AWWA C606.

c. Couplings for Grooved Pipe: [Ductile Iron ASTM A 536 (Grade 65-45-12)] [Malleable Iron ASTM A 47, Grade 32510]. [Copper ASTM A 536].

d. Flange Gaskets: Gaskets shall be made of non-asbestos material in accordance with ASME B16.21. Gaskets shall be flat, 1/16 inch thick, and contain Aramid fibers bonded with Styrene Butadiene Rubber (SBR) or Nitro Butadiene Rubber (NBR). Gaskets shall be the full face or self centering flat ring type. Gaskets used for hydrocarbon service shall be bonded with NBR.

e. Neoprene Gaskets for Hub and Cast-Iron Pipe and Fittings: CISPI HSN-85.

f. Brazing Material: Brazing material shall conform to AWS A5.8, BCuP-5.

g. Brazing Flux: Flux shall be in paste or liquid form appropriate for use with brazing material. Flux shall be as follows:

lead-free; have a 100 percent flushable residue; contain slightly acidic reagents; contain potassium borides; and contain fluorides. Silver brazing materials shall be in accordance with AWS A5.8.

h. Solder Material: Solder metal shall conform to ASTM B 32 95-5 tin-antimony.

i. Solder Flux: Flux shall be liquid form, non-corrosive, and conform to ASTM B 813, Standard Test 1.

j. PTFE Tape: PTFE Tape, for use with Threaded Metal or Plastic Pipe, ASTM D 3308.

k. Rubber Gaskets for Cast-Iron Soil-Pipe and Fittings (hub and spigot type and hubless type): ASTM C 564.

l. Rubber Gaskets for Grooved Pipe: ASTM D 2000, maximum temperature 230 degrees F.

m. Flexible Elastomeric Seals: ASTM D 3139, ASTM D 3212 or ASTM F 477.

n. Bolts and Nuts for Grooved Pipe Couplings: Heat-treated carbon steel, ASTM A 183.

o. Solvent Cement for Transition Joints between ABS and PVC Nonpressure Piping Components: ASTM D 3138.

p. Plastic Solvent Cement for ABS Plastic Pipe: ASTM D 2235.

q. Plastic Solvent Cement for PVC Plastic Pipe: ASTM D 2564 and ASTM D 2855.

r. Plastic Solvent Cement for CPVC Plastic Pipe: ASTM F 493.

s. Flanged fittings including flanges, bolts, nuts, bolt patterns, etc., shall be in accordance with ASME B16.5 class 150 and shall have the manufacturer's trademark affixed in accordance with MSS SP-25. Flange material shall conform to ASTM A 105/A 105M. Blind flange material shall conform to ASTM A 516/A 516M cold service and ASTM A 515/A 515M for hot service. Bolts shall be high strength or intermediate strength with material conforming to ASTM A 193/A 193M.

t. Plastic Solvent Cement for Styrene Rubber Plastic Pipe: ASTM D 3122.

2.1.2 Miscellaneous Materials

Miscellaneous materials shall conform to the following:

a. Water Hammer Arrester: PDI WH 201.

b. Copper, Sheet and Strip for Building Construction: ASTM B 370.

c. Asphalt Roof Cement: ASTM D 2822.

d. Hose Clamps: SAE J 1508.

e. Supports for Off-The-Floor Plumbing Fixtures: ASME A112.6.1M.

f. Metallic Cleanouts: ASME A112.36.2M.

g. Plumbing Fixture Setting Compound: A preformed flexible ring seal molded from hydrocarbon wax material. The seal material shall be nonvolatile nonasphaltic and contain germicide and provide watertight, gastight, odorproof and verminproof properties.

h. Coal-Tar Protective Coatings and Linings for Steel Water Pipelines: AWWA C203.

i. Hypochlorites: AWWA B300.

j. Liquid Chlorine: AWWA B301.

k. Polyethylene Encasement for Ductile-Iron Piping: AWWA ANSI/AWWA C105/A21.5.

l. Gauges - Pressure and Vacuum Indicating Dial Type - Elastic Element: ASME B40.1.

m. Thermometers: ASTM E 1.

2.1.3 Pipe Insulation Material

Insulation shall be as specified in Section 15080 THERMAL INSULATION FOR MECHANICAL SYSTEMS.

2.2 PIPE HANGERS, INSERTS, AND SUPPORTS

Pipe hangers, inserts, and supports shall conform to MSS SP-58 and MSS SP-69.

2.3 VALVES

Valves shall be provided on supplies to equipment and fixtures. Valves 2-1/2 inches and smaller shall be bronze with threaded bodies for pipe and solder-type connections for tubing. Valves 3 inches and larger shall have flanged iron bodies and bronze trim. Pressure ratings shall be based upon the application. Grooved end valves may be provided if the manufacturer certifies that the valves meet the performance requirements of applicable MSS standard. Valves shall conform to the following standards:

Description	Standard
Butterfly Valves	MSS SP-67
Cast-Iron Gate Valves, Flanged and Threaded Ends	MSS SP-70
Cast-Iron Swing Check Valves, Flanged and Threaded Ends	MSS SP-71
Ball Valves with Flanged Butt-Welding Ends for General Service	MSS SP-72
Ball Valves Threaded, Socket-Welding, Solder Joint, Grooved and Flared Ends	MSS SP-110

Description	Standard
Cast-Iron Plug Valves, Flanged and Threaded Ends	MSS SP-78
Bronze Gate, Globe, Angle, and Check Valves	MSS SP-80
Steel Valves, Socket Welding and Threaded Ends	ASME B16.34
Cast-Iron Globe and Angle Valves, Flanged and Threaded Ends	MSS SP-85
Backwater Valves	ASME A112.14.1
Vacuum Relief Valves	ASSE ANSI/ASSE 1001
Water Pressure Reducing Valves	ASSE ANSI/ASSE 1003
Water Heater Drain Valves	ASSE 1005
Trap Seal Primer Valves	ASSE 1018
Temperature and Pressure Relief Valves for Hot Water Supply Systems	ANSI Z21.22
Temperature and Pressure Relief Valves for Automatically Fired Hot Water Boilers	ASME CSD-1 Safety Code No., Part CW, Article 5

2.3.1 Backwater Valves

Backwater valves shall be either separate from the floor drain or a combination floor drain, P-trap, and backwater valve, as shown. Valves shall have cast-iron bodies with cleanouts large enough to permit removal of interior parts. Valves shall be of the flap type, hinged or pivoted, with revolving disks. Hinge pivots, disks, and seats shall be nonferrous metal. Disks shall be slightly open in a no-flow no-backwater condition. Cleanouts shall extend to finished floor and be fitted with threaded countersunk plugs.

2.3.2 Wall Faucets

Wall faucets with vacuum-breaker backflow preventer shall be brass with 3/4 inch male inlet threads, hexagon shoulder, and 3/4 inch hose connection. Faucet handle shall be securely attached to stem.

2.3.3 Wall Hydrants

Wall hydrants with vacuum-breaker backflow preventer shall have a nickle-brass or nickel-bronze wall plate or flange with nozzle and detachable key handle. A brass or bronze operating rod shall be provided within a galvanized iron casing of sufficient length to extend through the wall so that the valve is inside the building, and the portion of the hydrant between the outlet and valve is self-draining. A brass or bronze valve with coupling and union elbow having metal-to-metal seat shall be provided. Valve rod and seat washer shall be removable through the face of the hydrant. The hydrant shall have 3/4 inch exposed hose thread on spout and 3/4 inch male pipe thread on inlet.

2.3.4 Lawn Faucets

Lawn faucets shall be brass, with either straight or angle bodies, and shall be of the compression type. Body flange shall be provided with internal pipe thread to suit 3/4 inch pipe. Body shall be suitable for wrench grip. Faucet spout shall have 3/4 inchexposed hose threads. Faucet handle shall be securely attached to stem.

2.3.5 Yard Hydrants

Yard box or post hydrants shall have valve housings located below frost lines. Water from the casing shall be drained after valve is shut off. Hydrant shall be bronze with cast-iron box or casing guard. "T" handle key shall be provided.

2.3.6 Relief Valves

Water heaters and hot water storage tanks shall have a combination pressure and temperature (P&T) relief valve. The pressure relief element of a P&T relief valve shall have adequate capacity to prevent excessive pressure buildup in the system when the system is operating at the maximum rate of heat input. The temperature element of a P&T relief valve shall have a relieving capacity which is at least equal to the total input of the heaters when operating at their maximum capacity. Relief valves shall be rated according to ANSI Z21.22. Relief valves for systems where the maximum rate of heat input is less than 200,000 Btuh shall have 3/4 inch minimum inlets, and 3/4 inch outlets. Relief valves for systems where the maximum rate of heat input is greater than 200,000 Btuh shall have 1 inch minimum inlets, and 1 inch outlets. The discharge pipe from the relief valve shall be the size of the valve outlet.

2.3.7 Thermostatic Mixing Valves

Mixing valves, thermostatic type, shall be line size and shall be constructed with rough or finish bodies either with or without plating. Each valve shall be constructed to control the mixing of hot and cold water and to deliver water at a desired temperature regardless of pressure or input temperature changes. The control element shall be of an approved type. The body shall be of heavy cast bronze, and interior parts shall be brass, bronze, or copper. The valve shall be equipped with necessary stops, check valves, unions, and sediment strainers on the inlets. Mixing valves shall maintain water temperature within 5 degrees F of any setting.

2.4 FIXTURES

Fixtures shall be water conservation type, in accordance with NAPHCC-01. Fixtures for use by the physically handicapped shall be in accordance with CABO A117.1. Vitreous china, nonabsorbent, hard-burned, and vitrified throughout the body shall be provided. Porcelain enameled ware shall have specially selected, clear white, acid-resisting enamel coating evenly applied on surfaces. No fixture will be accepted that shows cracks, crazes, blisters, thin spots, or other flaws. Fixtures shall be equipped with appurtenances such as traps, faucets, stop valves, and drain fittings. Each fixture and piece of equipment requiring connections to the drainage system, except grease interceptors, shall be equipped with a trap. Brass expansion or toggle bolts capped with acorn nuts shall be provided for supports, and polished chromium-plated pipe, valves, and fittings shall be provided where exposed to view. Fixtures with the supply discharge below

the rim shall be equipped with backflow preventers. Internal parts of flush and/or flushometer valves, shower mixing valves, shower head face plates, pop-up stoppers of lavatory waste drains, and pop-up stoppers and overflow tees and shoes of bathtub waste drains may contain acetal resin, fluorocarbon, nylon, acrylonitrile-butadiene-styrene (ABS) or other plastic material, if the material has provided satisfactory service under actual commercial or industrial operating conditions for not less than 2 years. Plastic in contact with hot water shall be suitable for 180 degrees F water temperature. Plumbing fixtures shall be as indicated in paragraph PLUMBING FIXTURE SCHEDULE.

2.4.1 Lavatories

Enameled cast-iron lavatories shall be provided with two cast-iron or steel brackets secured to the underside of the apron and drilled for bolting to the wall in a manner similar to the hanger plate. Exposed brackets shall be porcelain enameled. Vitreous china lavatories shall be provided with two integral molded lugs on the back-underside of the fixture and drilled for bolting to the wall in a manner similar to the hanger plate.

2.5 Not Used

2.6 DRAINS

2.6.1 Floor and Shower Drains

Floor and shower drains shall consist of a galvanized body, integral seepage pan, and adjustable perforated or slotted chromium-plated bronze, nickel-bronze, or nickel-brass strainer, consisting of grate and threaded collar. Floor drains shall be cast iron except where metallic waterproofing membrane is installed. Drains shall be of double drainage pattern for embedding in the floor construction. The seepage pan shall have weep holes or channels for drainage to the drainpipe. The strainer shall be adjustable to floor thickness. A clamping device for attaching flashing or waterproofing membrane to the seepage pan without damaging the flashing or waterproofing membrane shall be provided when required. Drains shall be provided with threaded or caulked connection. In lieu of a caulked joint between the drain outlet and waste pipe, a neoprene rubber gasket conforming to ASTM C 564 may be installed, provided that the drain is specifically designed for the rubber gasket compression type joint. Floor and shower drains shall conform to ASME A112.21.1M.

2.6.1.1 Metallic Shower Pan Drains

Where metallic shower pan membrane is installed, polyethylene drain with corrosion-resistant screws securing the clamping device shall be provided. Polyethylene drains shall have fittings to adapt drain to waste piping. Polyethylene for floor drains shall conform to ASTM D 1248. Drains shall have separate cast-iron "P" trap, circular body, seepage pan, and strainer, unless otherwise indicated.

2.6.1.2 Drains and Backwater Valves

Drains and backwater valves installed in connection with waterproofed floors or shower pans shall be equipped with bolted-type device to securely clamp flashing.

2.6.2 Not Used

2.6.3 Hub Drains

HD-1 - Cast iron hub with PVC P-trap.

Hub drains shall extend two inches above finished floor level.

Specified P-traps shall be of same material schedule and type as connected piping system, unless indicated otherwise; see pipe specifications in Section 15060.

2.6.4

2.6.5 Not Used

2.6.6 Not Used

2.6.7 Roof Drains and Expansion Joints

Roof drains shall conform to ASME A112.21.2M, with dome and integral flange, and shall have a device for making a watertight connection between roofing and flashing. The whole assembly shall be galvanized heavy pattern cast iron. For aggregate surface roofing, the drain shall be provided with a gravel stop. On roofs other than concrete construction, roof drains shall be complete with underdeck clamp, sump receiver, and an extension for the insulation thickness where applicable. A clamping device for attaching flashing or waterproofing membrane to the seepage pan without damaging the flashing or membrane shall be provided when required to suit the building construction. Strainer openings shall have a combined area equal to twice that of the drain outlet. The outlet shall be equipped to make a proper connection to threaded pipe of the same size as the downspout. An expansion joint of proper size to receive the conductor pipe shall be provided. The expansion joint shall consist of a heavy cast-iron housing, brass or bronze sleeve, brass or bronze fastening bolts and nuts, and gaskets or packing. The sleeve shall have a nominal thickness of not less than 0.134 inch. Gaskets and packing shall be close-cell neoprene, O-ring packing shall be close-cell neoprene of 70 durometer. Packing shall be held in place by a packing gland secured with bolts.

2.7 SHOWER PAN

Shower pan may be copper, or nonmetallic material.

2.7.1 Sheet Copper

Sheet copper shall be 16 ounce weight.

2.7.2 Plasticized Polyvinyl Chloride Shower Pan Material

Material shall be sheet form. The material shall be 0.040 inch minimum thickness of plasticized polyvinyl chloride or chlorinated polyethylene and shall be in accordance with ASTM D 4551.

2.7.3 Nonplasticized Polyvinyl Chloride (PVC) Shower Pan Material

Material shall consist of a plastic waterproofing membrane in sheet form. The material shall be 0.040 inch minimum thickness of nonplasticized PVC and shall have the following minimum properties:

a. ASTM D 638, ASTM D 638M:

Ultimate Tensile Strength: 2600 psi
Ultimate Elongation: 398 percent
100 Percent Modulus: 445 psi

b. ASTM D 1004:

Tear Strength: 300 pounds per inch

c. ASTM E 96:

Permeance: 0.008 perms

d. Other Properties:

Specific Gravity: 1.29
PVC Solvent: Weldable
Cold Crack: minus -53 degrees F
Dimensional stability,
212 degrees F minus 2.5 percent
Hardness, Shore A: 89

2.8 TRAPS

Unless otherwise specified, traps shall be plastic per ASTM F 409 or copper-alloy adjustable tube type with slip joint inlet and swivel. Traps shall be without a cleanout. Tubes shall be copper alloy with walls not less than 0.032 inch thick within commercial tolerances, except on the outside of bends where the thickness may be reduced slightly in manufacture by usual commercial methods. Inlets shall have rubber washer and copper alloy nuts for slip joints above the discharge level. Swivel joints shall be below the discharge level and shall be of metal-to-metal or metal-to-plastic type as required for the application. Nuts shall have flats for wrench grip. Outlets shall have internal pipe thread, except that when required for the application, the outlets shall have sockets for solder-joint connections. The depth of the water seal shall be not less than 2 inches. The interior diameter shall be not more than 1/8 inch over or under the nominal size, and interior surfaces shall be reasonably smooth throughout. A copper alloy "P" trap assembly consisting of an adjustable "P" trap and threaded trap wall nipple with cast brass wall flange shall be provided for lavatories. The assembly shall be a standard manufactured unit and may have a rubber-gasketed swivel joint.

PART 3 EXECUTION

3.1 GENERAL INSTALLATION REQUIREMENTS

Piping located in air plenums shall conform to NFPA 90A requirements. Plastic pipe shall not be installed in air plenums. Piping located in shafts that constitute air ducts or that enclose air ducts shall be noncombustible in accordance with NFPA 90A. Installation of plastic pipe where in compliance with NFPA may be installed in accordance with PPFA-01. The plumbing system shall be installed complete with necessary fixtures, fittings, traps, valves, and accessories. Water and drainage piping shall be extended 5 feet outside the building, unless otherwise indicated. A gate valve and drain shall be installed on the water service line inside the building approximately 6 inches above the floor from point of entry. Piping shall be connected to the exterior service lines or capped or plugged if the exterior service is not in place. Sewer and water pipes

shall be laid in separate trenches, except when otherwise shown. Exterior underground utilities shall be at least 12 inches below the average local frost depthor as indicated on the drawings. If trenches are closed or the pipes are otherwise covered before being connected to the service lines, the location of the end of each plumbing utility shall be marked with a stake or other acceptable means. Valves shall be installed with control no lower than the valve body.

3.1.1 Water Pipe, Fittings, and Connections

3.1.1.1 Utilities

The piping shall be extended to fixtures, outlets, and equipment. The hot-water and cold-water piping system shall be arranged and installed to permit draining. The supply line to each item of equipment or fixture, except faucets, flush valves, or other control valves which are supplied with integral stops, shall be equipped with a shutoff valve to enable isolation of the item for repair and maintenance without interfering with operation of other equipment or fixtures. Supply piping to fixtures, faucets, hydrants, shower heads, and flushing devices shall be anchored to prevent movement.

3.1.1.2 Cutting and Repairing

The work shall be carefully laid out in advance, and unnecessary cutting of construction shall be avoided. Damage to building, piping, wiring, or equipment as a result of cutting shall be repaired by mechanics skilled in the trade involved.

3.1.1.3 Protection of Fixtures, Materials, and Equipment

Pipe openings shall be closed with caps or plugs during installation. Fixtures and equipment shall be tightly covered and protected against dirt, water, chemicals, and mechanical injury. Upon completion of the work, the fixtures, materials, and equipment shall be thoroughly cleaned, adjusted, and operated. Safety guards shall be provided for exposed rotating equipment.

3.1.1.4 Mains, Branches, and Runouts

Piping shall be installed as indicated. Pipe shall be accurately cut and worked into place without springing or forcing. Structural portions of the building shall not be weakened. Aboveground piping shall run parallel with the lines of the building, unless otherwise indicated. Branch pipes from service lines may be taken from top, bottom, or side of main, using crossover fittings required by structural or installation conditions. Supply pipes, valves, and fittings shall be kept a sufficient distance from other work and other services to permit not less than 1/2 inch between finished covering on the different services. Bare and insulated water lines shall not bear directly against building structural elements so as to transmit sound to the structure or to prevent flexible movement of the lines. Water pipe shall not be buried in or under floors unless specifically indicated or approved. Changes in pipe sizes shall be made with reducing fittings. Use of bushings will not be permitted except for use in situations in which standard factory fabricated components are furnished to accommodate specific excepted installation practice. Change in direction shall be made with fittings, except that bending of pipe 4 inches and smaller will be permitted, provided a pipe bender is used and wide sweep bends are formed. The center-line radius of bends shall be not

less than six diameters of the pipe. Bent pipe showing kinks, wrinkles, flattening, or other malformations will not be acceptable.

3.1.1.5 Pipe Drains

Pipe drains indicated shall consist of 3/4 inch hose bibb with renewable seat and [gate] [full port ball] [ball] valve ahead of hose bibb. At other low points, 3/4 inch brass plugs or caps shall be provided. Disconnection of the supply piping at the fixture is an acceptable drain.

3.1.1.6 Expansion and Contraction of Piping

Allowance shall be made throughout for expansion and contraction of water pipe. Each hot-water and hot-water circulation riser shall have expansion loops or other provisions such as offsets, changes in direction, etc., where indicated and/or required. Risers shall be securely anchored as required or where indicated to force expansion to loops. Branch connections from risers shall be made with ample swing or offset to avoid undue strain on fittings or short pipe lengths. Horizontal runs of pipe over 50 feet in length shall be anchored to the wall or the supporting construction about midway on the run to force expansion, evenly divided, toward the ends. Sufficient flexibility shall be provided on branch runouts from mains and risers to provide for expansion and contraction of piping. Flexibility shall be provided by installing one or more turns in the line so that piping will spring enough to allow for expansion without straining. If mechanical grooved pipe coupling systems are provided, the deviation from design requirements for expansion and contraction may be allowed pending approval of Contracting Officer.

3.1.1.7 Commercial-Type Water Hammer Arresters

Commercial-type water hammer arresters shall be provided on hot- and cold-water supplies and shall be located as generally indicated, with precise location and sizing to be in accordance with PDI WH 201. Water hammer arresters, where concealed, shall be accessible by means of access doors or removable panels. Commercial-type water hammer arresters shall conform to PDI WH 201. Vertical capped pipe columns will not be permitted.

3.1.2 Not Used

3.1.3 Joints

Installation of pipe and fittings shall be made in accordance with the manufacturer's recommendations. Mitering of joints for elbows and notching of straight runs of pipe for tees will not be permitted. Joints shall be made up with fittings of compatible material and made for the specific purpose intended.

3.1.3.1 Threaded

Threaded joints shall have American Standard taper pipe threads conforming to ASME B1.20.1. Only male pipe threads shall be coated with graphite or with an approved graphite compound, or with an inert filler and oil, or shall have a polytetrafluoroethylene tape applied.

3.1.3.2 Mechanical Couplings

Grooved mechanical joints shall be prepared according to the coupling manufacturer's instructions. Pipe and groove dimensions shall comply with

the tolerances specified by the coupling manufacturer. The diameter of grooves made in the field shall be measured using a "go/no-go" gauge, vernier or dial caliper, or narrow-land micrometer. Groove width and dimension of groove from end of the pipe shall be measured and recorded for each change in grooving tool setup to verify compliance with coupling manufacturer's tolerances. Grooved joints shall not be used in concealed locations.

3.1.3.3 Union and Flanged

Unions, flanges and mechanical couplings shall not be concealed in walls, ceilings, or partitions. Unions shall be used on pipe sizes 2-1/2 inches and smaller; flanges shall be used on pipe sizes 3 inches and larger.

3.1.3.4 Cast Iron Soil, Waste and Vent Pipe

Bell and spigot compression and hubless gasketed clamp joints for soil, waste and vent piping shall be installed per the manufacturer's recommendations.

3.1.3.5 Copper Tube and Pipe

The tube or fittings shall not be annealed when making connections. Connections shall be made with a multiflame torch.

a. Brazed. Brazed joints shall be made in conformance with AWS B2.2, MSS SP-73, and CDA-02 with flux and are acceptable for line sizes. Copper to copper joints shall include the use of copper-phosphorus or copper-phosphorus-silver brazing metal without flux. Brazing of dissimilar metals (copper to bronze or brass) shall include the use of flux with either a copper-phosphorus, copper-phosphorus-silver or a silver brazing filler metal.

b. Soldered. Soldered joints shall be made with flux and are only acceptable for lines 2 inches and smaller. Soldered joints shall conform to ASME B31.5 and CDA-02. Sill foss/brazing rod soldered joints are acceptable for joining 4 inches and smaller.

c. Copper Tube Extracted Joint. An extracted mechanical joint may be made in copper tube. Joint shall be produced with an appropriate tool by drilling a pilot hole and drawing out the tube surface to form a collar having a minimum height of three times the thickness of the tube wall. To prevent the branch tube from being inserted beyond the depth of the extracted joint, dimpled depth stops shall be provided. Branch tube shall be notched for proper penetration into fitting to ensure a free flow joint. Extracted joints shall be brazed in accordance with NAPHCC-01 using B-Cup series filler metal in accordance with MSS SP-73. Soldered extracted joints will not be permitted.

3.1.3.6 Plastic Pipe

Acrylonitrile-Butadiene-Styrene (ABS) pipe shall have joints made with solvent cement. PVC and CPVC pipe shall have joints made with solvent cement elastomeric, threading, (threading of Schedule 80 Pipe is allowed only where required for disconnection and inspection; threading of Schedule 40 Pipe is not allowed), or mated flanged.

3.1.3.7 Not Used

3.1.3.8 Not Used

3.1.3.9 Other Joint Methods

3.1.4 Dissimilar Pipe Materials

Connections between ferrous and non-ferrous copper pipe shall be made with dielectric unions or flange waterways. Connecting joints between plastic and metallic pipe shall be made with transition fitting for the specific purpose.

3.1.5 Corrosion Protection for Buried Pipe and Fittings

3.1.5.1 Cast Iron and Ductile Iron

Pressure pipe shall have protective coating, a cathodic protection system, and joint bonding. Pipe, fittings, and joints shall have a protective coating. The protective coating shall be completely encasing polyethylene tube or sheet in accordance with AWWA ANSI/AWWA C105/A21.5. Joints and fittings shall be cleaned, coated with primer, and wrapped with tape. The pipe shall be cleaned, coated, and wrapped prior to pipe tightness testing. Joints and fittings shall be cleaned, coated, and wrapped after pipe tightness testing. Tape shall conform to AWWA C203 and shall be applied with a 50 percent overlap. Primer shall be as recommended by the tape manufacturer.

3.1.5.2 Steel

Steel pipe, joints, and fittings shall be cleaned, coated with primer, and wrapped with tape. Pipe shall be cleaned, coated, and wrapped prior to pipe tightness testing. Joints and fittings shall be cleaned, coated, and wrapped after pipe tightness testing. Tape shall conform to AWWA C203 and shall be applied with a 50 percent overlap. Primer shall be as recommended by the tape manufacturer.

3.1.6 Pipe Sleeves and Flashing

Pipe sleeves shall be furnished and set in their proper and permanent location.

3.1.6.1 Sleeve Requirements

Pipes passing through concrete or masonry walls or concrete floors or roofs shall be provided with pipe sleeves fitted into place at the time of construction. Sleeves are not required for cast-iron soil pipe passing through concrete slab on grade, except where penetrating a membrane waterproof floor. A modular mechanical type sealing assembly may be installed in lieu of a waterproofing clamping flange and caulking and sealing of annular space between pipe and sleeve. The seals shall consist of interlocking synthetic rubber links shaped to continuously fill the annular space between the pipe and sleeve with corrosion-protected carbon steel bolts, nuts, and pressure plates. The links shall be loosely assembled with bolts to form a continuous rubber belt around the pipe with a pressure plate under each bolt head and each nut. After the seal assembly is properly positioned in the sleeve, tightening of the bolt shall cause the rubber sealing elements to expand and provide a watertight seal between the pipe and the sleeve. Each seal assembly shall be sized as

recommended by the manufacturer to fit the pipe and sleeve involved. Sleeves shall not be installed in structural members, except where indicated or approved. Rectangular and square openings shall be as detailed. Each sleeve shall extend through its respective floor, or roof, and shall be cut flush with each surface, except for special circumstances. Pipe sleeves passing through floors in wet areas such as mechanical equipment rooms, lavatories, kitchens, and other plumbing fixture areas shall extend a minimum of 4 inches above the finished floor. Unless otherwise indicated, sleeves shall be of a size to provide a minimum of 1/4 inch clearance between bare pipe and inside of sleeve or between jacket over insulation and sleeves. Sleeves in bearing walls shall be steel pipe or cast-iron pipe. Sleeves for membrane waterproof floors shall be steel pipe, cast-iron pipe, or plastic pipe. Membrane clamping devices shall be provided on pipe sleeves for waterproof floors. Sleeves in nonbearing walls or ceilings may be steel pipe, cast-iron pipe, galvanized sheet metal with lock-type longitudinal seam, or moisture-resistant fiber or plastic. Plastic sleeves shall not be used in nonbearing fire walls, roofs, or floor/ceilings. Except as otherwise specified, the annular space between pipe and sleeve, or between jacket over insulation and sleeve, shall be sealed as indicated with sealants conforming to ASTM C 920 and with a primer, backstop material and surface preparation as specified in Section 07900 JOINT SEALING. Pipes passing through sleeves in concrete floors over crawl spaces shall be sealed as specified above. The annular space between pipe and sleeve or between jacket over insulation and sleeve shall not be sealed for interior walls which are not designated as fire rated. Sleeves through below-grade walls in contact with earth shall be recessed 1/2 inch from wall surfaces on both sides. Annular space between pipe and sleeve shall be filled with backing material and sealants in the joint between the pipe and [concrete] [masonry] wall as specified above. Sealant selected for the earth side of the wall shall be compatible with dampproofing/waterproofing materials that are to be applied over the joint sealant.

3.1.6.2 Flashing Requirements

Pipes passing through roof or floor waterproofing membrane shall be installed through a 16 ounce copper flashing, each within an integral skirt or flange. Flashing shall be suitably formed, and the skirt or flange shall extend not less than 8 inches from the pipe and shall be set over the roof or floor membrane in a solid coating of bituminous cement. The flashing shall extend up the pipe a minimum of 10 inches. For cleanouts, the flashing shall be turned down into the hub and caulked after placing the ferrule. Pipes passing through pitched roofs shall be flashed, using lead or copper flashing, with an adjustable integral flange of adequate size to extend not less than 8 inches from the pipe in all directions and lapped into the roofing to provide a watertight seal. The annular space between the flashing and the bare pipe or between the flashing and the metal-jacket-covered insulation shall be sealed as indicated. Flashing for dry vents shall be turned down into the pipe to form a waterproof joint. Pipes, up to and including 10 inches in diameter, passing through roof or floor waterproofing membrane may be installed through a cast-iron sleeve with caulking recess, anchor lugs, flashing-clamp device, and pressure ring with brass bolts. Flashing shield shall be fitted into the sleeve clamping device. Pipes passing through wall waterproofing membrane shall be sleeved as described above. A waterproofing clamping flange shall be installed.

3.1.6.3 Waterproofing

Waterproofing at floor-mounted water closets shall be accomplished by installing a wax ring between the water closet outlet and the waste pipe then applying a bead of silicone around the water closet base. No sleeve is required for the core drilled floor penetration.

3.1.6.4 Optional Counterflashing

Instead of turning the flashing down into a dry vent pipe, or caulking and sealing the annular space between the pipe and flashing or metal-jacket-covered insulation and flashing, counterflashing may be accomplished by utilizing the following:

a. A standard roof coupling for threaded pipe up to 6 inches in diameter.

b. A tack-welded or banded-metal rain shield around the pipe.

3.1.6.5 Pipe Penetrations of Slab on Grade Floors

Where pipes, fixture drains, floor drains, cleanouts or similar items penetrate slab on grade floors, except at penetrations of floors with waterproofing membrane as specified in paragraphs Flashing Requirements and Waterproofing, a groove 1/4 to 1/2 inch wide by 1/4 to 3/8 inch deep shall be formed around the pipe, fitting or drain. The groove shall be filled with a sealant as specified in Section 07900 JOINT SEALING.

3.1.7 Fire Seal

Where pipes pass through fire walls, fire-partitions, fire-rated pipe chase walls or floors above grade, a fire seal shall be provided as specified in Section 07840 FIRESTOPPING.

3.1.8 Supports

3.1.8.1 General

Hangers used to support piping 2 inches and larger shall be fabricated to permit adequate adjustment after erection while still supporting the load. Pipe guides and anchors shall be installed to keep pipes in accurate alignment, to direct the expansion movement, and to prevent buckling, swaying, and undue strain. Piping subjected to vertical movement when operating temperatures exceed ambient temperatures shall be supported by variable spring hangers and supports or by constant support hangers. In the support of multiple pipe runs on a common base member, a clip or clamp shall be used where each pipe crosses the base support member. Spacing of the base support members shall not exceed the hanger and support spacing required for an individual pipe in the multiple pipe run. Threaded sections of rods shall not be formed or bent.

3.1.8.2 Not Used

3.1.8.3 Pipe Hangers, Inserts, and Supports

Installation of pipe hangers, inserts and supports shall conform to MSS SP-58 and MSS SP-69, except as modified herein.

a. Types 5, 12, and 26 shall not be used.

b. Type 3 shall not be used on insulated pipe.

c. Type 18 inserts shall be secured to concrete forms before concrete is placed. Continuous inserts which allow more adjustment may be used if they otherwise meet the requirements for type 18 inserts.

d. Type 19 and 23 C-clamps shall be torqued per MSS SP-69 and shall have both locknuts and retaining devices furnished by the manufacturer. Field-fabricated C-clamp bodies or retaining devices are not acceptable.

e. Type 20 attachments used on angles and channels shall be furnished with an added malleable-iron heel plate or adapter.

f. Type 24 may be used only on trapeze hanger systems or on fabricated frames.

g. Type 39 saddles shall be used on insulated pipe 4 inches and larger when the temperature of the medium is 60 degrees F or higher. Type 39 saddles shall be welded to the pipe.

h. Type 40 shields shall:

(1) Be used on insulated pipe less than 4 inches.

(2) Be used on insulated pipe 4 inches and larger when the temperature of the medium is 60 degrees F or less.

(3) Have a high density insert for pipe 2 inches and larger and for smaller pipe sizes when the insulation is suspected of being visibly compressed, or distorted at or near the shield/insulation interface. High density inserts shall have a density of 8 pcf or greater.

i. Horizontal pipe supports shall be spaced as specified in MSS SP-69 and a support shall be installed not over 1 foot from the pipe fitting joint at each change in direction of the piping. Pipe supports shall be spaced not over 5 feet apart at valves. Operating temperatures in determining hanger spacing for PVC or CPVC pipe shall be 120 degrees F for PVC and 180 degrees F for CPVC. Horizontal pipe runs shall include allowances for expansion and contraction.

j. Vertical pipe shall be supported at each floor, except at slab-on-grade, at intervals of not more than 15 feet nor more than 8 feet from end of risers, and at vent terminations. Vertical pipe risers shall include allowances for expansion and contraction.

k. Type 40 shields used on insulated pipe shall have high density inserts with a density of 8 pcf or greater.

l. Type 35 guides using steel, reinforced polytetrafluoroethylene (PTFE) or graphite slides shall be provided to allow longitudinal pipe movement. Slide materials shall be suitable for the system operating temperatures, atmospheric conditions, and bearing loads encountered. Lateral restraints shall be provided as needed. Where steel slides do not require provisions for lateral restraint the following may be used:

(1) On pipe 4 inches and larger when the temperature of the medium is 60 degrees F or higher, a Type 39 saddle, welded to the pipe, may freely rest on a steel plate.

(2) On pipe less than 4 inches a Type 40 shield, attached to the pipe or insulation, may freely rest on a steel plate.

(3) On pipe 4 inches and larger carrying medium less that 60 degrees F a Type 40 shield, attached to the pipe or insulation, may freely rest on a steel plate.

m. Pipe hangers on horizontal insulated pipe shall be the size of the outside diameter of the insulation. The insulation shall be continuous through the hanger on all pipe sizes and applications.

n. Where there are high system temperatures and welding to piping is not desirable, the type 35 guide shall include a pipe cradle, welded to the guide structure and strapped securely to the pipe. The pipe shall be separated from the slide material by at least 4 inches or by an amount adequate for the insulation, whichever is greater.

o. Hangers and supports for plastic pipe shall not compress, distort, cut or abrade the piping, and shall allow free movement of pipe except where otherwise required in the control of expansion/contraction.

3.1.9 Welded Installation

Plumbing pipe weldments shall be as indicated. Changes in direction of piping shall be made with welding fittings only; mitering or notching pipe to form elbows and tees or other similar type construction will not be permitted. Branch connection may be made with either welding tees or forged branch outlet fittings. Branch outlet fittings shall be forged, flared for improvement of flow where attached to the run, and reinforced against external strains. Beveling, alignment, heat treatment, and inspection of weld shall conform to ASME B31.1. Weld defects shall be removed and repairs made to the weld, or the weld joints shall be entirely removed and rewelded. After filler metal has been removed from its original package, it shall be protected or stored so that its characteristics or welding properties are not affected. Electrodes that have been wetted or that have lost any of their coating shall not be used.

3.1.10 Pipe Cleanouts

Pipe cleanouts shall be the same size as the pipe except that cleanout plugs larger than 4 inches will not be required. A cleanout installed in connection with cast-iron soil pipe shall consist of a long-sweep 1/4 bend or one or two 1/8 bends extended to the place shown. An extra-heavy cast-brass or cast-iron ferrule with countersunk cast-brass head screw plug shall be caulked into the hub of the fitting and shall be flush with the floor. Cleanouts in connection with other pipe, where indicated, shall be T-pattern, 90-degree branch drainage fittings with cast-brass screw plugs, except plastic plugs shall be installed in plastic pipe. Plugs shall be the same size as the pipe up to and including 4 inches. Cleanout tee branches with screw plug shall be installed at the foot of soil and waste stacks, at the foot of interior downspouts, on each connection to building storm drain where interior downspouts are indicated, and on each building drain outside the building. Cleanout tee branches may be omitted on stacks

in single story buildings with slab-on-grade construction or where less than 18 inches of crawl space is provided under the floor. Cleanouts on pipe concealed in partitions shall be provided with chromium plated bronze, nickel bronze, nickel brass or stainless steel flush type access cover plates. Round access covers shall be provided and secured to plugs with securing screw. Square access covers may be provided with matching frames, anchoring lugs and cover screws. Cleanouts in finished walls shall have access covers and frames installed flush with the finished wall. Cleanouts installed in finished floors subject to foot traffic shall be provided with a chrome-plated cast brass, nickel brass, or nickel bronze cover secured to the plug or cover frame and set flush with the finished floor. Heads of fastening screws shall not project above the cover surface. Where cleanouts are provided with adjustable heads, the heads shall be cast iron.

3.2 Not used

3.2.1 Not Used

3.3 FIXTURES AND FIXTURE TRIMMINGS

Angle stops, straight stops, stops integral with the faucets, or concealed type of lock-shield, and loose-key pattern stops for supplies with threaded, sweat or solvent weld inlets shall be furnished and installed with fixtures. Where connections between copper tubing and faucets are made by rubber compression fittings, a beading tool shall be used to mechanically deform the tubing above the compression fitting. Exposed traps and supply pipes for fixtures and equipment shall be connected to the rough piping systems at the wall, unless otherwise specified under the item. Floor and wall escutcheons shall be as specified. Drain lines and hot water lines of fixtures for handicapped personnel shall be insulated and do not require polished chrome finish. Plumbing fixtures and accessories shall be installed within the space shown.

3.3.1 Fixture Connections

Where space limitations prohibit standard fittings in conjunction with the cast-iron floor flange, special short-radius fittings shall be provided. Connections between earthenware fixtures and flanges on soil pipe shall be made gastight and watertight with a closet-setting compound or neoprene gasket and seal. Use of natural rubber gaskets or putty will not be permitted. Fixtures with outlet flanges shall be set the proper distance from floor or wall to make a first-class joint with the closet-setting compound or gasket and fixture used.

3.3.2 Flushometer Valves

Flushometer valves shall be secured to prevent movement by anchoring the long finished top spud connecting tube to wall adjacent to valve with approved metal bracket. Flushometer valves for water closets shall be installed 39 inches above the floor. Bumpers for water closet seats shall be installed on the wall.

3.3.3 Height of Fixture Rims Above Floor

Lavatories shall be mounted with rim 31 inches above finished floor. Wall-hung drinking fountains and water coolers shall be installed with rim 42 inches above floor. Wall-hung service sinks shall be mounted with rim 28 inches above the floor. Installation of fixtures for use by the physically handicapped shall be in accordance with CABO A117.1.

3.3.4 Shower Bath Outfits

The area around the water supply piping to the mixing valves and behind the escutcheon plate shall be made watertight by caulking or gasketing.

3.3.5 Fixture Supports

Fixture supports for off-the-floor lavatories, urinals, water closets, and other fixtures of similar size, design, and use, shall be of the chair-carrier type. The carrier shall provide the necessary means of mounting the fixture, with a foot or feet to anchor the assembly to the floor slab. Adjustability shall be provided to locate the fixture at the desired height and in proper relation to the wall. Support plates, in lieu of chair carrier, shall be fastened to the wall structure only where it is not possible to anchor a floor-mounted chair carrier to the floor slab.

3.3.5.1 Support for Solid Masonry Construction

Chair carrier shall be anchored to the floor slab. Where a floor-anchored chair carrier cannot be used, a suitable wall plate shall be imbedded in the masonry wall.

3.3.5.2 Support for Cellular-Masonry Wall Construction

Chair carrier shall be anchored to floor slab. Where a floor-anchored chair carrier cannot be used, a suitable wall plate shall be fastened to the cellular wall using through bolts and a back-up plate.

3.3.5.3 Support for Steel Stud Frame Partitions

Chair carrier shall be used. The anchor feet and tubular uprights shall be of the heavy duty design; and feet (bases) shall be steel and welded to a square or rectangular steel tube upright. Wall plates, in lieu of floor-anchored chair carriers, shall be used only if adjoining steel partition studs are suitably reinforced to support a wall plate bolted to these studs.

3.3.5.4 Support for Wood Stud Construction

Where floor is a concrete slab, a floor-anchored chair carrier shall be used. Where entire construction is wood, wood crosspieces shall be installed. Fixture hanger plates, supports, brackets, or mounting lugs shall be fastened with not less than No. 10 wood screws, 1/4 inch thick minimum steel hanger, or toggle bolts with nut. The wood crosspieces shall extend the full width of the fixture and shall be securely supported.

3.3.5.5 Wall-Mounted Water Closet Gaskets

Where wall-mounted water closets are provided, reinforced wax, treated felt, or neoprene gaskets shall be provided. The type of gasket furnished shall be as recommended by the chair-carrier manufacturer.

3.3.6 Not Used

3.3.7 Access Panels

Access panels shall be provided for concealed valves and controls, or any item requiring inspection or maintenance. Access panels shall be of sufficient size and located so that the concealed items may be serviced,

maintained, or replaced. Access panels shall be as specified in Section 05500 MISCELLANEOUS METAL.

3.3.8 Sight Drains

Sight drains shall be installed so that the indirect waste will terminate 2 inches above the flood rim of the funnel to provide an acceptable air gap.

3.3.9 Traps

Each trap shall be placed as near the fixture as possible, and no fixture shall be double-trapped. Traps installed on cast-iron soil pipe shall be cast iron. Traps installed on steel pipe or copper tubing shall be recess-drainage pattern, or brass-tube type. Traps installed on plastic pipe may be plastic conforming to ASTM D 3311. Traps for acid-resisting waste shall be of the same material as the pipe.

3.4 Not Used

3.5 Not Used

3.6 IDENTIFICATION SYSTEMS

3.6.1 Identification Tags

Identification tags made of brass, engraved laminated plastic, or engraved anodized aluminum, indicating service and valve number shall be installed on valves, except those valves installed on supplies at plumbing fixtures. Tags shall be 1-3/8 inch minimum diameter, and marking shall be stamped or engraved. Indentations shall be black, for reading clarity. Tags shall be attached to valves with No. 12 AWG, copper wire, chrome-plated beaded chain, or plastic straps designed for that purpose.

3.6.1.1 Valve Schedule

Provide framed valve list describing valve number and location. Locate schedule in the mechanical room.

3.6.2 Color Coding

Color coding for piping identification shall be as specified in Section 09900 PAINTING, GENERAL.

3.6.3 Color Coding Scheme for Hidden Utility Components

Apply color tabs on ceilings to indicate location of valves, control boxes or access doors above the ceiling

3.7 ESCUTCHEONS

Escutcheons shall be provided at finished surfaces where bare or insulated piping, exposed to view, passes through floors, walls, or ceilings, except in boiler, utility, or equipment rooms. Escutcheons shall be fastened securely to pipe or pipe covering and shall be satin-finish, corrosion-resisting steel, polished chromium-plated zinc alloy, or polished chromium-plated copper alloy. Escutcheons shall be either one-piece or split-pattern, held in place by internal spring tension or setscrew.

3.8 PAINTING

Painting of pipes, hangers, supports, and other iron work, either in concealed spaces or exposed spaces, is specified in Section 09900 PAINTING, GENERAL.

3.9 TESTS, FLUSHING AND DISINFECTION

3.9.1 Plumbing System

The following tests shall be performed on the plumbing system in accordance with NAPHCC-01.

a. Drainage and Vent Systems Tests.

b. Building Sewers Tests.

c. Water Supply Systems Tests.

3.9.1.1 Not Used

3.9.1.2 Not Used

3.9.2 Defective Work

If inspection or test shows defects, such defective work or material shall be replaced or repaired as necessary and inspection and tests shall be repeated. Repairs to piping shall be made with new materials. Caulking of screwed joints or holes will not be acceptable.

3.9.3 System Flushing

Before tests, potable water piping shall be flushed. In general, sufficient water shall be used to produce a minimum water velocity of 2.5 feet per second through piping being flushed. Flushing shall be continued until entrained dirt and other foreign materials have been removed and until discharge water shows no discoloration. System shall be drained at low points. Strainer screens shall be removed, cleaned, and replaced in line. After flushing and cleaning, systems shall be prepared for service by immediately filling water piping with clean, fresh potable water. Any stoppage, discoloration, or other damage to the finish, furnishings, or parts of the building due to the Contractor's failure to properly clean the piping system shall be repaired by the Contractor. When the system flushing is complete, the hot-water system shall be adjusted for uniform circulation. Flushing devices and automatic control systems shall be adjusted for proper operation.

3.9.4 Operational Test

Upon completion of and prior to acceptance of the installation, the Contractor shall subject the plumbing system to operating tests to demonstrate satisfactory functional and operational efficiency. Such operating tests shall cover a period of not less than 8 hours for each system and shall include the following information in a report with conclusion as to the adequacy of the system:

a. Time, date, and duration of test.

b. Water pressures at the most remote and the highest fixtures.

c. Operation of each fixture and fixture trim.

d. Operation of each valve, hydrant, and faucet.

e. Pump suction and discharge pressures.

f. Temperature of each domestic hot-water supply.

g. Operation of each floor and roof drain by flooding with water.

h. Operation of each vacuum breaker and backflow preventer.

i. Complete operation of each water pressure booster system, including pump start pressure and stop pressure.

3.9.5 Disinfection

After operational tests are complete, the entire domestic hot- and cold-water distribution system shall be disinfected. System shall be flushed as specified, before introducing chlorinating material. The chlorinating material shall be hypochlorites or liquid chlorine. Water chlorination procedure shall be in accordance with AWWA M20. The chlorinating material shall be fed into the water piping system at a constant rate at a concentration of at least 50 parts per million (ppm). A properly adjusted hypochlorite solution injected into the main with a hypochlorinator, or liquid chlorine injected into the main through a solution-feed chlorinator and booster pump, shall be used. The chlorine residual shall be checked at intervals to ensure that the proper level is maintained. Chlorine application shall continue until the entire main is filled. The water shall remain in the system for a minimum of 24 hours. Each valve in the system being disinfected shall be opened and closed several times during the contact period to ensure its proper disinfection. Following the 24-hour period, no less than 25 ppm chlorine residual shall remain in the system. Water tanks shall be disinfected by the addition of chlorine directly to the filling water. Following a 6 hour period, no less than 50 ppm chlorine residual shall remain in the tank. The system including the tanks shall then be flushed with clean water until the residual chlorine is reduced to less than one part per million. During the flushing period each valve and faucet shall be opened and closed several times. From several points in the system the Contracting Officer will take samples of water in proper disinfection containers for bacterial examination. The samples of water shall be tested for total coliform organisms (coliform bacteria, fecal coliform, streptococcal, and other bacteria) in accordance with AWWA-01. The testing method used shall be either the multiple-tube fermentation technique or the membrane-filter technique. The sterilizing shall be repeated until tests indicate the absence of coliform organisms (zero mean coliform density per 100 milliliters) in the samples for at least 2 full days. The system will not be accepted until satisfactory bacteriological results have been obtained.

3.10 PLUMBING FIXTURE SCHEDULE

WC-1 WATER CLOSET:

Pressure assisted siphon-jet, round front, tank supply , ASME A112.19.2M, floor mounted. Floor flange shall be copper alloy, cast iron, or plastic.

Gasket shall be wax type.

Seat with Cover - Solid white plastic closed front seat with cover.

Flush Tank - An adequate quantity of water shall be provided to flush and clean the fixture served. The water supply to flush tanks equipped for manual flushing shall be controlled by a float valve or other automatic device designed to refill the tank after each discharge, and to completely shut off the water flow to the tank when the tank is filled to operational capacity. Water closets having their flush valve seat located below the flood level rim of the closet bowl shall have a ballcock installed within a sheath or in a separate and isolated compartment of the tank, both to have visible discharge onto the floor in case of failure. Provision shall be made to automatically supply water to the fixture so as to refill the trap seal after each flushing. Provide device for pressure assisted flush.

Flush Valve in Flush Tank - Flush valve seats in tanks for flushing water closets shall be at least 1 inch above the flood level rim of the bowl connected thereto, except in approved water closet and flush tank combinations designed so that when the tank is flushed and the fixture is clogged or partially clogged, the flush valve shall close tightly so that water will not spill continuously over the rim of the bowl or back flow from the bowl to the tank.

T/SH-1 BATHTUB:

Straight front, three wall alcove installation, 1524 X 762 X 406 mm (60 x 30 x 16) in, enameled cast iron, ASME A112.19.1M, raised bottom

Integral Drain Assembly - Provide tub with integral drain assembly by tub manufacturer. Provide plug, cup strainer, overflow assembly, washers, couplings, pop-up lever, trip lever, stopper, fittings, etc., shall be brass, cast copper alloy, or wrought copper alloy. See paragraph FIXTURES for optional plastic accessories.

Shower head: Bath Showers - Notwithstanding Section 00700 CONTRACT CLAUSES FAR 52.236-5, Material and Workmanship, the Bath Shower Head Shower shall be "Temptrol II Tub and Shower System, Model BP-56-2-X-SS-FG" manufactured by Symmons Industries, Inc. in order to be fully compatible with and interface with the existing Phase 1, 2 and 3 Lodging facility. No other product will be acceptable.

L-1 LAVATORY:

Manufacturer's standard sink depth, vitreous china ASME A112.19.2M, countertop, oval 518 x 432 mm (20" x 17") similar to "Chealsea" by Crane or "Aqualyn" by American Standard.

Faucet - Notwithstanding Section 00700 CONTRACT CLAUSES FAR 52.236-5, Material and Workmanship, the Lavatory Faucet shall be "Symmetrix S-20 Series with lift rod and pip-up drain assembly" lavatory faucet manufactured by Symmons Industries, Inc in order to be fully compatible with and interface with the existing Phase 1, 2 and 3 Lodging facility. No other product will be acceptable. The competition Advocate authorizes source procurement.

SK-1 BAR SINK:

Bar Sink, SK-1: Countertop bowl, single compartment, 381 x 381 mm (15" x 15") inches O.D. x 175 MM (7") deep, seamless, 18 gauge Type 302 18-8 stainless steel, self-rimming, 1 3/4 inch radius coved corners, undercoating, 3-hole drilling in ledge back.

Faucet and Spout - Notwithstanding Section 00700 CONTRACT CLAUSES FAR 52.236-5, Material and Workmanship, the Faucet shall be "102mm (4") Deckmount Sink Faucet", Model 27T3-844R3 manufactured by Delta Commercial FAucets in order to be fully compatible with and interface with the existing Phase 1, 2 and 3 Lodging facility. No other product will be acceptable. The competition Advocate authorizes sole source procurement. Faucets have gooseneck spout, standard flow control aerator and 102mm (4") blade handles.

Drain Assembly - Plug, cup strainer, crossbars, jam nuts, washers, couplings, stopper, etc., shall be copper alloy or stainless steel.

3.11 POSTED INSTRUCTIONS

Framed instructions under glass or in laminated plastic, including wiring and control diagrams showing the complete layout of the entire system, shall be posted where directed. Condensed operating instructions explaining preventive maintenance procedures, methods of checking the system for normal safe operation, and procedures for safely starting and stopping the system shall be prepared in typed form, framed as specified above for the wiring and control diagrams and posted beside the diagrams. The framed instructions shall be posted before acceptance testing of the systems.

3.12 Not Used

3.13 TABLES

TABLE I
PIPE AND FITTING MATERIALS FOR
DRAINAGE, WASTE, AND VENT PIPING SYSTEMS

		SERVICE					
Item #	Pipe and Fitting Materials	A	B	C	D	E	F
1	Cast iron soil pipe and fittings, hub and spigot, ASTM A 74 with compression gaskets	X	X	X	X	X	
2	Cast iron soil pipe and fittings hubless, CISPI 301 and ASTM A 888		X	X	X		
3	Cast iron drainage fittings, threaded, ASME B16.12 for use with Item 10	X		X	X		
4	Cast iron screwed fittings (threaded) ASME B16.4 for use with Item 10				X	X	
5	Grooved pipe couplings, ferrous and non-ferrous pipe ASTM A 536 and ASTM A 47, ASTM A 47M	X	X		X	X	
6	Ductile iron grooved joint fittings for ferrous pipe ASTM A 536 and ASTM A 47, ASTM A 47M for use with Item 5	X	X		X	X	
7	Bronze sand casting grooved joint pressure fittings for non-ferrous pipe ASTM B 584, for use with Item 5	X	X		X	X	
8	Wrought copper grooved joint pressure pressure fittings for non-ferrous pipe ASTM B 75 C12200, ASTM B 152, ASTM B 152M, C11000, ASME B16.22 ASME B16.22 for use with Item 5	X	X				
9	Malleable-iron threaded fittings, galvanized ASME B16.3 for use with Item 10				X	X	
10	Steel pipe, seamless galvanized, ASTM A 53, Type S, Grade B	X			X	X	
11	Seamless red brass pipe, ASTM B 43		X	X			
12	Bronzed flanged fittings, ASME B16.24 for use with Items 11 and 14				X	X	

TABLE I
PIPE AND FITTING MATERIALS FOR
DRAINAGE, WASTE, AND VENT PIPING SYSTEMS

		SERVICE					
Item #	Pipe and Fitting Materials	A	B	C	D	E	F
13	Cast copper alloy solder joint pressure fittings, ASME B16.18 for use with Item 14				X	X	
14	Seamless copper pipe, ASTM B 42			X			
15	Cast bronze threaded fittings, ASME B16.15				X	X	
16	Copper drainage tube, (DWV), ASTM B 306	X*	X	X*	X	X	
17	Wrought copper and wrought alloy solder-joint drainage fittings. ASME B16.29	X	X	X	X	X	
18	Cast copper alloy solder joint drainage fittings, DWV, ASME B16.23	X	X	X	X	X	
19	Acrylonitrile-Butadiene-Styrene (ABS) plastic drain, waste, and vent pipe and fittings ASTM D 2661, ASTM F 628	X	X	X	X	X	X
20	Polyvinyl Chloride plastic drain, waste and vent pipe and fittings, ASTM D 2665, ASTM F 891, (Sch 40) ASTM F 1760	X	X	X	X	X	X
22	High-silicon content cast iron pipe and fittings (hub and spigot, and mechanical joint), ASTM A 518, ASTM A 518M		X			X	
23	Polypropylene (PP) waste pipe and fittings, ASTM D 4101						X

SERVICE:

A - Underground Building Soil, Waste and Storm Drain
B - Aboveground Soil, Waste, Drain In Buildings
C - Underground Vent
D - Aboveground Vent
E - Interior Rainwater Conductors Aboveground
F - Corrosive Waste And Vent Above And Belowground
* - Hard Temper

TABLE I
PIPE AND FITTING MATERIALS FOR
DRAINAGE, WASTE, AND VENT PIPING SYSTEMS

		SERVICE					
Item #	Pipe and Fitting Materials	A	B	C	D	E	F

TABLE II
PIPE AND FITTING MATERIALS FOR PRESSURE PIPING SYSTEMS

		SERVICE			
Item No.	Pipe and Fitting Materials	A	B	C	D
1	Malleable-iron threaded fittings, a. Galvanized, ASME B16.3 for use with Item 4a	X	X	X	X
	b. Same as "a" but not galvanized for use with Item 4b			X	
2	Grooved pipe couplings, ferrous pipe ASTM A 536 and ASTM A 47, ASTM A 47M, non-ferrous pipe, ASTM A 536 and ASTM A 47, ASTM A 47M	X	X	X	
3	Ductile iron grooved joint fittings for ferrous pipe ASTM A 536 and ASTM A 47, ASTM A 47M for use with Item 2	X	X	X	
4	Steel pipe: a. Seamless, galvanized, ASTM A 53, Type S, Grade B	X	X	X	X
	b. Seamless, black, ASTM A 53, Type S, Grade B			X	
5	Seamless red brass pipe, ASTM B 43	X	X		X
6	Bronze flanged fittings, ASME B16.24 for use with Items 5 and 7	X	X		X
7	Seamless copper pipe, ASTM B 42	X	X		X
8	Seamless copper water tube, ASTM B 88, ASTM B 88M	X**	X**	X**	X***
9	Seamless and welded copper distribution tube (Type D) ASTM B 641	X**	X**	X**	X****
10	Cast bronze threaded fittings, ASME B16.15 for use with Items 5 and 7	X	X		X
11	Wrought copper and bronze solder-joint pressure fittings, ASME B16.22 for use with Items 5 and 7	X	X	X	X

TABLE II
PIPE AND FITTING MATERIALS FOR PRESSURE PIPING SYSTEMS

		SERVICE			
Item No.	Pipe and Fitting Materials	A	B	C	D
12	Cast copper alloy solder-joint pressure fittings, ASME B16.18 for use with Items 8 and 9	X	X	X	X
13	Bronze and sand castings grooved joint pressure fittings for non-ferrous pipe ASTM B 584, for use with Item 2	X	X	X	
14	Polyethylene (PE) plastic pipe, Schedules 40 and 80, based on outside diameter ASTM D 2447	X			X
15	Polyethylene (PE) plastic pipe (SDR-PR), based on controlled outside diameter, ASTM D 3035	X			X
16	Polyethylene (PE) plastic pipe (SIDR-PR), based on controlled inside diameter, ASTM D 2239	X			X
17	Butt fusion polyethylene (PE) plastic pipe fittings, ASTM D 3261 for use with Items 14, 15, and 16	X			X
18	Socket-type polyethylene fittings for outside diameter-controlled polyethylene pipe, ASTM D 2683 for use with Item 15	X			X
19	Polyethylene (PE) plastic tubing, ASTM D 2737	X			X
20	Chlorinated polyvinyl chloride (CPVC) plastic hot and cold water distribution system, ASTM D 2846	X	X		X
21	Chlorinated polyvinyl chloride (CPVC) plastic pipe, Schedule 40 and 80, ASTM F 441	X			X
22	Chlorinated polyvinyl chloride (CPVC) plastic pipe (SDR-PR) ASTM F 442	X			X

TABLE II
PIPE AND FITTING MATERIALS FOR PRESSURE PIPING SYSTEMS

		SERVICE			
Item No.	Pipe and Fitting Materials	A	B	C	D
23	Threaded chlorinated polyvinyl chloride (chloride CPVC) plastic pipe fittings, Schedule 80, ASTM F 437, for use with Items 20, and 21	X	X		X
24	Socket-type chlorinated polyvinyl chloride (CPVC) plastic pipe fittings, Schedule 40, ASTM F 438 for use with Items 20, 21, and 22	X	X		X
25	Socket-type chlorinated polyvinyl chloride (CPVC) plastic pipe fittings Schedule 80, ASTM F 439 for use with Items 20, 21, and 22	X	X		X
26	Polyvinyl chloride (PVC) plastic pipe, Schedules 40, 80, and 120, ASTM D 1785	X			X
27	Polyvinyl chloride (PVC) pressure-rated pipe (SDR Series), ASTM D 2241	X			X
28	Polyvinyl chloride (PVC) plastic pipe fittings, Schedule 40, ASTM D 2466	X			X
29	Socket-type polyvinyl chloride (PVC) plastic pipe fittings, schedule 80, ASTM D 2467 for use with Items 26 and 27	X			X
30	Threaded polyvinyl chloride (PVC) plastic pipe fittings, schedule 80, ASTM D 2464	X			X
31	Joints for IPS pvs pipe using solvent cement, ASTM D 2672	X			X
32	Filament-wound reinforced thermosetting resin (RTRP) pipe, ASTM D 2996	X	X		
33	Steel pipeline flanges, MSS SP-44	X	X		
34	Fittings: brass or bronze; ASME B16.15, and ASME B16.18	X	X		

TABLE II
PIPE AND FITTING MATERIALS FOR PRESSURE PIPING SYSTEMS

		SERVICE			
Item No.	Pipe and Fitting Materials	A	B	C	D
	ASTM B 828				
35	Carbon steel pipe unions, socket-welding and threaded, MSS SP-83	X	X	X	
36	Malleable-iron threaded pipe unions ASME B16.39	X	X		
37	Nipples, pipe threaded ASTM A 733	X	X	X	

A - Cold Water Aboveground
B - Hot Water 180 degrees F Maximum Aboveground
C - Compressed Air Lubricated
D - Cold Water Service Belowground
Indicated types are minimum wall thicknesses.
** - Type L - Hard
*** - Type K - Hard temper with brazed joints only or type K-soft temper without joints in or under floors
**** - In or under slab floors only brazed joints

Inspect millwork shop drawings; confirm location and size of fixtures and openings before rough-in and installation.

Inspect roughed-in domestic water and waste piping systems to verify actual piping connection locations prior to fixture installation. Inspect floors, bases and conditions under which fixture work will be accomplished and notify appropriate parties in writing of all unsatisfactory conditions.

Install all plumbing fixtures plumb and true to wall lines. All fixture heights, spacing, and distances from walls shall be in accordance with architectural floor plans, elevations and details.

All plumbing fixtures specified herein or indicated on Drawings as HANDICAPPED shall be located and mounted at heights and locations in compliance with Federal ADAAG Accessibility Standards. Provide pre-molded waste pipe insulation on lavatory discharge piping and pipe insulation on exposed hot water piping to lavatories. Orient flush valve handle towards open side of stall for water closets.

Securely install each plumbing fixture to wall or floor in accordance with manufacturer's written instructions. Caulk all floor mounted fixtures water-tight between fixture and floor and/or wall.

Coordinate fixture installation with other work, including water and drain piping.

All exposed supply piping, trim and valves for plumbing fixtures in finished rooms shall be chrome plated. This includes rigid and flexible supplies to lavatories, sinks, tank type, water closets and urinals, flush valves, stops, traps and tail pieces.

Provide chrome plated escutcheon plates on all pipes passing through finished floors, walls and ceilings, with outside diameter sized to cover sleeve opening and inside diameter to fit snugly around pipe. Set tight to building surface.

Install vacuum breakers on all plumbing fixtures, faucets and valves which have a submerged inlet or hose threads. Vacuum breakers can be integral with fixture or mounted 90 inches above floor in domestic water line serving required fixture(s). Use only breakers which are approved by local and state health authorities.

Install all fixtures to permit easy removal of traps for cleaning and servicing, and to permit access to valves, pipes and other equipment. Any relocation of fixtures required to provide proper access shall be accomplished at no additional cost to Owner.

At completion of plumbing fixture installations:

Thoroughly clean each plumbing fixture with approved cleaning solvents and solutions.

Test operate each plumbing fixture to demonstrate compliance with specifications.

Adjust each flow regulating valve or device to provide sufficient flow rates and pressure at outlets.

If required by local code test shower receptor by filling with water to the level of the rough-in threshold. Test upper and underside of subpan to a point where it is clamped to the drain.

-- End of Section --

SECTION TABLE OF CONTENTS

DIVISION 15 - MECHANICAL

SECTION 15653

AIR-CONDITIONING SYSTEM (UNITARY TYPE)

09/93

PART 1 GENERAL

1.1 REFERENCES
1.2 SUBMITTALS
1.3 Not Used
1.4 DELIVERY, STORAGE, AND HANDLING
1.5 PROJECT/SITE CONDITIONS
1.5.1 Verification of Dimensions
1.5.2 Drawings

PART 2 PRODUCTS

2.1 STANDARD COMMERCIAL PRODUCTS
2.2 NAMEPLATES
2.3 ELECTRICAL WORK
2.4 MISCELLANEOUS MATERIALS
2.4.1 Gaskets
2.4.2 Bolts and Nuts
2.4.3 Pipe Hangers, Inserts, and Supports
2.4.4 Escutcheons
2.4.5 Pressure and Vacuum Gauge
2.4.6 Temperature Gauges
2.4.6.1 Stem Cased-Glass
2.4.6.2 Not Used
2.4.6.3 Not used
2.4.6.4 Thermal Well
2.4.7 Unicellular Plastic Foam
2.4.8 Bird Screen
2.5 UNITARY EQUIPMENT, ROOM UNIT (PTAC's)_
2.5.1 Not Used
2.5.2 Packaged Terminal Unit
2.5.3 Compressor
2.5.4 Air-To-Refrigerant Coils
2.5.5 Fans
2.5.6 Air Filters
2.5.7 Not Used
2.5.8 Cabinet Construction
2.5.9 Wall Sleeve
2.5.10 Not Used
2.5.11 Unit Controls
2.5.12 Additional Units
2.6 Not Used
2.7 Not Used
2.7.1 Not Used
2.7.2 Not Used
2.7.3 Not Used

2.7.4 Not Used
2.8 Not Used
2.9 Not Used
2.10 Not Used
2.10.1 Not Used
2.10.2 Not Used
2.10.3 Not Used
2.11 Not USed
2.12 SYSTEM COMPONENTS
2.12.1 Refrigerant and Oil
2.12.2 Fans
2.12.3 Primary/Supplemental Heating
2.12.3.1 Not Used
2.12.4 Air Filters
2.12.4.1 Extended Surface Pleated Panel Filters
2.12.4.2 Not Used
2.12.4.3 Not Used
2.12.5 Coil Frost Protection
2.12.6 Not Used
2.12.6.1 Not Used
2.12.6.2 Not Used
2.12.6.3 Not Used
2.12.6.4 Not Used
2.12.7 Not Used
2.12.8 Not Used
2.12.9 Cabinet Construction
2.12.9.1 Indoor Cabinet
2.12.9.2 Outdoor Cabinet
2.12.10 Not Used
2.13 Not Used
2.14 Not Used
2.15 Not Used
2.16
2.17 Not Used
2.18 Not Used
2.19 Not Used
2.20 Not used
2.21 Not Used
2.21.1 Not Used
2.21.2 Not Used
2.22 Not Used
2.22.1 Not Used
2.22.2 Not Used
2.23 Not Used
2.24 TEMPERATURE CONTROLS
2.25 DUCTWORK COMPONENTS
2.25.1 Metal Ductwork
2.25.1.1 Transitions
2.25.1.2 Metallic Flexible Duct
2.25.1.3 Insulated Nonmetallic Flexible Duct Runouts
2.25.1.4 General Service Duct Connectors
2.25.2 Not Used
2.25.3 Ductwork Insulation
2.25.4 Ductwork Accessories
2.25.4.1 Duct Access Doors
2.25.4.2 Fire Dampers
2.25.4.3 Splitters and Manual Balancing Dampers
2.25.4.4 Air Deflectors and Branch Connections
2.25.5 Duct Sleeves, Framed Prepared Openings, Closure Collars

2.25.5.1 Duct Sleeves
2.25.5.2 Framed Prepared Openings
2.25.5.3 Closure Collars
2.25.6 Not Used
2.25.7 Diffusers, Registers, and Grilles
2.25.7.1 Diffusers
2.25.7.2 Registers and Grilles
2.25.8 Not Used
2.26
2.27 Not Used
2.27.1 Not Used
2.27.2 Not Used
2.27.3 Not Used
2.27.4 Not Used
2.27.5 Not Used
2.27.6 Not Used
2.27.7 Not Used
2.27.7.1 Not Used
2.27.7.2 Not Used
2.27.7.3 Not Used
2.27.8 Not Used
2.27.8.1 Not Used
2.27.8.2 Not Used
2.28 Not Used
2.29 FABRICATION
2.29.1 Factory Coating
2.29.2 Field Painting
2.29.2.1 Color Coding
2.29.2.2 Not Used
2.30 ELECTRIC CABINET UNIT HEATERS

PART 3 EXECUTION

3.1 INSTALLATION
3.1.1 Not Used
3.1.2 Not Used
3.1.3 Building Surface Penetrations
3.1.3.1 Not Used
3.1.3.2 General Service Areas
3.1.3.3 Waterproof Penetrations
3.1.3.4 Fire-Rated Penetrations
3.1.3.5 Escutcheons
3.1.4 Access Panels
3.1.5 Not Used
3.1.5.1 Not Used
3.1.5.2 Not Used
3.1.5.3 Not Used
3.1.5.4 Not Used
3.1.5.5 Not Used
3.1.6 Not Used
3.1.7 Not Used
3.1.8 Not Used
3.1.9 Not Used
3.1.10 Not Used
3.1.11 Not Used
3.1.12 Not Used
3.1.13 Not Used
3.1.14 Not Used
3.1.15 Metal Ductwork

3.1.16 Not Used
3.1.17 Not Used
3.1.18 Field Applied Insulation
3.1.19 Factory Applied Insulation
3.1.20 Not Used
3.2 TESTS
3.2.1 Not Used
3.2.2 Not Used
3.2.2.1 Not Used
3.2.2.2 Not Used
3.2.2.3 Not Used
3.2.2.4 Not Used
3.2.2.5 Not Used
3.2.2.6 Not Used
3.2.3 Ductwork Leak Tests
3.2.4 Not Used
3.2.5 Not Used
3.2.6 Not Used
3.3 Not Used
3.4 CLEANING AND ADJUSTING
3.4.1 Not Used
3.4.2 Ductwork
3.4.3 Not Used
3.4.4 Testing, Adjusting, and Balancing
3.5 DEMONSTRATIONS

-- End of Section Table of Contents --

SECTION 15653

AIR-CONDITIONING SYSTEM (UNITARY TYPE)
09/93

PART 1 GENERAL

1.1 REFERENCES

The publications listed below form a part of this specification to the extent referenced. The publications are referred to in the text by basic designation only.

AIR CONDITIONING AND REFRIGERATION INSTITUTE (ARI)

ARI ARI 310/380/CSA C744	(1993) Packaged Terminal Air-Conditioners and Heat Pumps
ARI 350	(1986) Sound Rating of Non-Ducted Indoor Air-Conditioning Equipment
ARI 700	(1995; Apx C) Specifications for Fluorocarbon and Other Refrigerants

AIR DIFFUSION COUNCIL (ADC)

ADC 1062:GRD	(1984) Test Codes for Grilles, Registers and Diffusers

AMERICAN SOCIETY FOR TESTING AND MATERIALS (ASTM)

ASTM A 53	(1997) Pipe, Steel, Black and Hot-Dipped, Zinc-Coated, Welded and Seamless
ASTM A 307	(1994) Carbon Steel Bolts and Studs, 60 000 PSI Tensile Strength
ASTM A 653/A 653M	(1997) Steel Sheet, Zinc-Coated (Galvanized) or Zinc-Iron Alloy-Coated (Galvannealed) by the Hot-Dip Process
ASTM B 117	(1997) Operating Salt Spray (Fog) Apparatus
ASTM C 534	(1994) Preformed Flexible Elastomeric Cellular Thermal Insulation in Sheet and Tubular Form
ASTM C 1071	(1991) Thermal and Acoustical Insulation (Glass Fiber, Duct Lining Material)
ASTM D 520	(1984; R 1995) Zinc Dust Pigment
ASTM E 437	(1992) Industrial Wire Cloth and Screens (Square Opening Series)

ASTM F 104	(1993) Nonmetallic Gasket Materials

AMERICAN SOCIETY OF HEATING, REFRIGERATING AND AIR-CONDITIONING ENGINEERS (ASHRAE)

ASHRAE 15	(1994) Safety Code for Mechanical Refrigeration
ASHRAE 34	(1992; Addenda a-j) Number Designation and Safety Classification of Refrigerants
ASHRAE 52.1	(1992) Gravimetric and Dust-Spot Procedures for Testing Air-Cleaning Devices Used in General Ventilation for Removing Particulate Matter
ASHRAE 62	Ventilation for acceptable indoor air quality.

ASME INTERNATIONAL (ASME)

ASME B40.1	(1991) Gauges - Pressure Indicating Dial Type - Elastic Element
ASME BPV VIII Div 1	(1998) Boiler and Pressure Vessel Code; Section VIII, Pressure Vessels Division 1 - Basic Coverage
ASME BPV IX	(1998) Boiler and Pressure Vessel Code; Section IX, Welding and Brazing Qualifications

MANUFACTURERS STANDARDIZATION SOCIETY OF THE VALVE AND FITTINGS INDUSTRY (MSS)

MSS SP-58	(1993) Pipe Hangers and Supports - Materials, Design and Manufacture
MSS SP-69	(1996) Pipe Hangers and Supports - Selection and Application

NATIONAL ELECTRICAL MANUFACTURERS ASSOCIATION (NEMA)

NEMA MG 1	(1993; Rev 1; Rev 2; Rev 3) Motors and Generators
NEMA MG 2	(1989) Safety Standard for Construction and Guide for Selection, Installation, and Use of Electric Motors and Generators

NATIONAL FIRE PROTECTION ASSOCIATION (NFPA)

NFPA 90A	(1996) Installation of Air Conditioning and Ventilating Systems

SHEET METAL AND AIR CONDITIONING CONTRACTORS' NATIONAL ASSOCIATION (SMACNA)

SMACNA Install Fire Damp HVAC	(1992) Fire, Smoke and Radiation Damper Installation Guide for HVAC Systems
SMACNA TAB HVAC Sys	(1995; Addenda Nov 1997) HVAC Duct Construction Standards - Metal and Flexible
SMACNA Leakage Test Mnl	(1985) HVAC Air Duct Leakage Test Manual

UNDERWRITERS LABORATORIES (UL)

UL 181	(1996; Rev Oct 1996) Factory-Made Air Ducts and Air Connectors
UL 214	(1997) Tests for Flame-Propagation of Fabrics and Films
UL 555	(1995) Fire Dampers
UL 586	(1996) High-Efficiency, Particulate, Air Filter Units
UL 900	(1994; Rev thru Apr 1997) Test Performance of Air Filter Units
UL 1995	(1995; Rev thru Feb 97) Heating and Cooling Equipment
UL Bld Mat Dir	(1998) Building Materials Directory
UL Elec Const Dir	(1997; Supple) Electrical Construction Equipment Directory
UL Fire Resist Dir	(1997) Fire Resistance Directory (2 Vol.)

1.2 SUBMITTALS

Government approval is required for submittals with a "GA" designation; submittals having an "FIO" designation are for information only. The following shall be submitted in accordance with Section 01330 SUBMITTAL PROCEDURES:

SD-03 Product Data

Air-Conditioning and Heating System; G-AO.

Manufacturer's standard catalog data, prior to the purchase or installation of a particular component, shall be highlighted to show brand name, model number, size, options, performance charts and curves, etc. in sufficient detail to demonstrate compliance with contract requirements. Data shall be submitted for each specified component. Data shall include manufacturer's recommended installation instructions and procedures. If vibration isolation is specified for a unit, vibration isolator literature shall be included containing catalog cuts and certification that the isolation characteristics of the isolators provided meet the manufacturer's recommendations.

Spare Parts Data; G-AE

Spare parts data for each different item of equipment specified, after approval of detail drawings and not later than 1 month prior to the date of beneficial occupancy. The data shall include a complete list of parts and supplies, with current unit prices and source of supply, a recommended spare parts list for 1 year of operation, and a list of the parts recommended by the manufacturer to be replaced on a routine basis.

Tests;

A letter, at least 10 working days in advance of each tests, advising the Contracting Officer of the test. Individual letters shall be submitted for refrigerant system, ductwork leak tests and the system performance tests. Each letter shall identify the date, time, and location for each test.

Demonstrations; G-AE

A letter, at least 14 working days prior to the date of the proposed training course, which identifies the date, time, and location for the training.

Qualifications;

A letter listing the qualifying procedures for each welder. The letter shall include supporting data such as test procedures used, what was tested etc., and a list of the names of qualified welders and their identification symbols.

Verification of Dimensions;

A letter, at least 2 weeks prior to beginning construction, including the date the site was visited, conformation of existing conditions, and any discrepancies found.

SD-06 Test Reports

Tests; G-AO

Six copies of each test containing the information described below in bound 8-1/2 x 11 inch booklets. Individual reports shall be submitted for the crefrigerant system, ductwork leak tests.

(1) The date the tests were performed.

(2) A list of equipment used, with calibration certifications.

(3) Initial test summaries.

(4) Repairs/adjustments performed.

(5) Final test results.

System Performance Tests; G-AE

Six copies of the report shall be provided in bound 8-1/2 x 11 inch booklets. The report shall document compliance with the specified performance criteria upon completion and testing of the system. The report shall indicate the number of days covered by the tests and any conclusions as to the adequacy of the system. The report shall also include the following information and shall be taken at least three different times at outside dry-bulb temperatures that are at least 5 degrees F apart:

(1) Date and outside weather conditions.

(2) The load on the system based on the following:

(a) The refrigerant used in the system.
(b) Condensing temperature and pressure.
(c) Suction temperature and pressure.
(d) Ambient, condensing and coolant temperatures
(e) Running current, voltage and proper phase sequence for each phase of all motors.

(3) The actual on-site setting of operating and safety controls.

(4) Thermostatic expansion valve superheat - value as determined by field test

(5) Subcooling

(6) High and low refrigerant temperature switch set-points

(7) Low oil pressure switch set-point

(8) Defrost system timer and thermostat set-points

(9) Moisture content

(10) Capacity control set-points

(11) Field data and adjustments which affect unit performance and energy consumption.

(12) Field adjustments and settings which were not permanently marked as an integral part of a device.

Inspections;

Test report, at the completion of one year of service, in bound 8-1/2 x 11 inch booklets. The report shall identify the condition of the cooling tower and condenser. The report shall also include a comparison of the condition of the cooling tower and condenser with the manufacturer's recommended operating conditions.

SD-07 Certificates

Air-Conditioning System; G-AE

Where the system, components, or equipment are specified to

comply with requirements of ARI, ASHRAE, ASME, or UL, proof of such compliance shall be provided. The label or listing of the specified agency shall be acceptable evidence. In lieu of the label or listing, a written certificate from an approved, nationally recognized testing organization equipped to perform such services, stating that the items have been tested and conform to the requirements and testing methods of the specified agency may be submitted. When performance requirements of this project's drawings and specifications vary from standard ARI rating conditions, computer printouts, catalog, or other application data certified by ARI or a nationally recognized laboratory as described above shall be included. If ARI does not have a current certification program that encompasses such application data, the manufacturer may self certify that his application data complies with project performance requirements in accordance with the specified test standards.

Service Organizations; .

A certified list of qualified permanent service organizations for support of the equipment which includes their addresses and qualifications. The service organizations shall be reasonably convenient to the equipment installation and be able to render satisfactory service to the equipment on a regular and emergency basis during the warranty period of the contract.

SD-08 Manufacturer's Instructions

Framed Instructions;

Framed instructions for posting, at least 2 weeks prior to construction completion.

SD-10 Operation and Maintenance Manuals

Operation Manual; .

Six complete copies of an operation manual in bound 8-1/2 x 11 inch booklets listing step-by-step procedures required for system startup, operation, and shutdown. The booklets shall include the manufacturer's name, model number, and parts list. The manuals shall include the manufacturer's name, model number, service manual, and a brief description of all equipment and their basic operating features.

Maintenance Manual; .

Six complete copies of maintenance manual in bound 8-1/2 x 11 inch booklets listing routine maintenance procedures, possible breakdowns and repairs, and a trouble shooting guide. The manuals shall include piping and equipment layouts and simplified wiring and control diagrams of the system as installed.

1.3 Not Used

1.4 DELIVERY, STORAGE, AND HANDLING

Stored items shall be protected from the weather and contamination. Proper protection and care of all material before, during, and after installation

shall be the Contractor's responsibility. Any materials found to be damaged shall be replaced at the Contractor's expense. During installation, piping and similar openings shall be capped to keep out dirt and other foreign matter.

1.5 PROJECT/SITE CONDITIONS

1.5.1 Verification of Dimensions

The Contractor shall become familiar with all details of the work, verify dimensions in the field, and advise the Contracting Officer of any discrepancy before performing any work.

1.5.2 Drawings

Because of the small scale of the drawings, it is not possible to indicate all offsets, fittings, and accessories that may be required. The Contractor shall carefully investigate the plumbing, fire protection, electrical, structural and finish conditions that would affect the work to be performed and arrange such work accordingly, furnishing required offsets, fittings, and accessories to meet such conditions. Equipment, ductwork, and piping arrangements shall fit into space allotted and allow adequate acceptable clearances for installation, replacement, entry, servicing, and maintenance.

PART 2 PRODUCTS

2.1 STANDARD COMMERCIAL PRODUCTS

Materials and equipment shall be standard products of a manufacturer regularly engaged in the manufacturing of such products, which are of a similar material, design and workmanship. The standard products shall have been in satisfactory commercial or industrial use for 2 years prior to bid opening. The 2 year use shall include applications of equipment and materials under similar circumstances and of similar size. The 2 years experience shall be satisfactorily completed by a product which has been sold or is offered for sale on the commercial market through advertisements, manufacturer's catalogs, or brochures. Products having less than a 2 year field service record shall be acceptable if a certified record of satisfactory field operation, for not less than 6000 hours exclusive of the manufacturer's factory tests, can be shown. Products shall be supported by a service organization. System components shall be environmentally suitable for the indicated locations.

2.2 NAMEPLATES

Major equipment including compressors, condensers, receivers, heat exchanges, fans, cooling towers, pumps and motors shall have the manufacturer's name, address, type or style, model or serial number, and catalog number on a plate secured to the item of equipment. Plates shall be durable and legible throughout equipment life and made of stainless steel]. Plates shall be fixed in prominent locations with nonferrous screws or bolts.

2.3 ELECTRICAL WORK

Electrical equipment, motors, motor efficiencies, and wiring shall be in accordance with Section 16415 ELECTRICAL WORK, INTERIOR. Electrical motor driven equipment specified shall be provided complete with motors, motor

starters, and controls. Electrical characteristics shall be as shown, and unless otherwise indicated, all motors of 1 horsepower and above with open, dripproof, totally enclosed, or explosion proof fan cooled enclosures, shall be high efficiency type. Field wiring shall be in accordance with manufacturer's instructions. Each motor shall conform to NEMA MG 1 and NEMA MG 2 and be of sufficient size to drive the equipment at the specified capacity without exceeding the nameplate rating of the motor. Motors shall be continuous duty with the enclosure specified. Motor starters shall be provided complete with thermal overload protection and other appurtenances necessary for the motor control indicated. Motors shall be furnished with a magnetic across-the-line or reduced voltage type starter as required by the manufacturer. Motor duty requirements shall allow for maximum frequency start-stop operation and minimum encountered interval between start and stop. Motors shall be sized for the applicable loads. Motor torque shall be capable of accelerating the connected load within 20 seconds with 80 percent of the rated voltage maintained at motor terminals during one starting period. Motor bearings shall be fitted with grease supply fittings and grease relief to outside of enclosure. Manual or automatic control and protective or signal devices required for the operation specified and any control wiring required for controls and devices specified, but not shown, shall be provided.

2.4 MISCELLANEOUS MATERIALS

2.4.1 Gaskets

Gaskets shall conform to ASTM F 104 - classification for compressed sheet with nitrile binder and acrylic fibers for maximum 700 degrees F service.

2.4.2 Bolts and Nuts

Bolts and nuts, except as required for piping applications, shall be in accordance with ASTM A 307. The bolt head shall be marked to identify the manufacturer and the standard with which the bolt complies in accordance with ASTM A 307.

2.4.3 Pipe Hangers, Inserts, and Supports

Pipe hangers, inserts, and supports shall conform to MSS SP-58 and MSS SP-69.

2.4.4 Escutcheons

Escutcheons shall be chromium-plated iron or chromium-plated brass, either one piece or split pattern, held in place by internal spring tension or set screws.

2.4.5 Pressure and Vacuum Gauge

Gauge shall conform to ASME B40.1, Class 1, 2, or 3, Style X, Type I or III as required, 4-1/2 inches in diameter with phenolic or metal case. Each gauge range shall be selected so that at normal operating pressure, the needle is within the middle-third of the range.

2.4.6 Temperature Gauges

Industrial duty thermometers shall be provided for the required temperature range. Thermometers shall have Fahrenheit scale in 2 degree graduations scale on a white face. The pointer shall be adjustable.

2.4.6.1 Stem Cased-Glass

Stem cased-glass case shall be polished stainless steel or cast aluminum, 9 inches long, with clear acrylic lens, and non-mercury filled glass tube.

2.4.6.2 Not Used

2.4.6.3 Not used

2.4.6.4 Thermal Well

Thermal well shall be identical size, 1/2 or 3/4 inch NPT connection, brass or stainless steel. Where test wells are indicated, provide captive plug-fitted type 1/2 inch NPT connection suitable for use with either engraved stem or standard separable socket thermometer or thermostat. Extended neck thermal wells shall be of sufficient length to clear insulation thickness by 1 inch.

2.4.7 Unicellular Plastic Foam

Unicellular plastic foam shall be in accordance with ASTM C 534, Form T, except that D-Factor shall not exceed 0.28 at 75 degrees F mean temperature.

2.4.8 Bird Screen

Screen shall be in accordance with ASTM E 437, Type 1, Class 1, 2 by 2 mesh, 0.063 inch diameter aluminum wire or 0.031 inch diameter stainless steel wire.

2.5 UNITARY EQUIPMENT, ROOM UNIT (PTAC's)_

2.5.1 Not Used

2.5.2 Packaged Terminal Unit

Not withstanding Section 00700 CONTRACT CLAUSES FAR 52.236-5 Material and Workmanship, the packaged terminal units shall be manufactured by McQuay in order to be fully compatible with the existing packaged terminal units in Phase 2 Lodging Facility. No other product will be acceptable. The Competition Advocate authorities sole source procurement. Unit shall be a through-the-wall mounted, heavy-duty commercial grade, factory assembled and precharged air-conditioner unit. Unit shall be in accordance with ARI ARI 310/380/CSA C744 and UL 1995. Units shall be removable from inside the building for servicing without removing the outside cabinet. Unit shall have a noise rating in accordance with ARI 350 and not exceed 7 bels while the entire unit is operating at any fan or compressor speed. An outdoor coil temperature sensor shall be provided to guard against coil freeze-up by either switching to supplemental heat only, or by cycling the compressor to defrost the coil.

2.5.3 Compressor

Compressor shall be hermetically sealed reciprocating, rotary, or scroll type. Compressor shall be fitted with permanent split capacitor motor, overload protection, and vibration isolators. Compressor shall be protected against high discharge pressure, loss of charge, low voltage, and short cycling.

2.5.4 Air-To-Refrigerant Coils

Evaporator and condenser coils shall have copper tubes of 3/8 inch minimum diameter with copper or aluminum fins that are mechanically bonded or soldered to the tubes. Casing shall be galvanized steel or aluminum. Contact of dissimilar metals shall be avoided. Coils shall be tested in accordance with ASHRAE 15 at the factory and be suitable for the working pressure of the installed system. Each coil shall be dehydrated and sealed after testing and prior to evaluation and charging. Each unit shall be provided with a factory operating charge of refrigerant and oil or a holding charge. Unit shipped with a holding charge shall be field charged. A condensate removal system shall be provided.

2.5.5 Fans

Indoor and outdoor fans shall be the centrifugal, direct driven type. Fans shall be statically and dynamically balanced. Outdoor fan shall be designed so that condensate will evaporate without drip, splash, or spray on building exterior. Indoor fan shall be provided with a minimum two-speed motor with built-in overload protection. Fan motors shall be the inherently protected, permanent split-capacitor type.

2.5.6 Air Filters

Filters shall be of the sectional or panel cleanable type and be capable of filtering the entire air supply.

2.5.7 Not Used

2.5.8 Cabinet Construction

Cabinet shall be free of visible fasteners, sharp protuberances and edges. Enclosure sheet metal shall be a minimum of 18 gauge steel with a protective coating. Face panels shall be removable and shall provide full access to unit appurtenances. Access to controls shall be without removal of the face panel. Conditioned air shall discharge through adjustable louvers. Cabinet shall be thermally and acoustically insulated with materials which conform to NFPA 90A. Units shall be furnished with a prewired subbase. Subbase shall have leveling screws with provisions for remote unit control. Subbase shall be of 18 gauge galvanized steel construction with a protective coating to match that of the room cabinet. Paint and finishes shall comply with the requirements specified in paragraph "Factory Coating".

2.5.9 Wall Sleeve

Louver shall be stormproof type, constructed of anodized, stamped or extruded aluminum. Sleeve shall be a water and airtight completely insulated assembly, with weather-resistant protective coating.

2.5.10 Not Used

2.5.11 Unit Controls

Controls shall include an on-off switch, high and low selector switch for both the heating and cooling mode, multiple speed fan cooling and heating mode, room air fan switch, outside air damper control, and an adjustable cooling and heating thermostat. Function and temperature controls shall be remotely mounted as indicated or as accepted by the Contracting Officer.

Units shall be equipped with terminals for setback/set-up control through Building Automation System (BAS).

2.5.12 Additional Units

In addition to the units shown on plan, the Contractor shall provide the government with five additional PTAC units, one for each size scheduled, to be used as stand-by replacement units.

2.6 Not Used

2.7 Not Used

2.7.1 Not Used
2.7.2 Not Used
2.7.3 Not Used
2.7.4 Not Used

2.8 Not Used

2.9 Not Used

2.10 Not Used

2.10.1 Not Used

2.10.2 Not Used

2.10.3 Not Used

2.11 Not USed

2.12 SYSTEM COMPONENTS

2.12.1 Refrigerant and Oil

Refrigerant shall be one of the fluorocarbon gases. Refrigerants shall have number designations and safety classifications in accordance with ASHRAE 34. Refrigerants shall meet the requirements of ARI 700 as a minimum. Refrigerants shall have an Ozone Depletion Potential (ODP) of less than or equal to 0.05. Contractor shall provide and install a complete charge of refrigerant for the installed system as recommended by the manufacturer. Except for factory sealed units, two complete charges of lubricating oil for each compressor crankcase shall be furnished. One charge shall be used during the system performance testing period. Following the satisfactory completion of the performance testing, the oil shall be drained and replaced with a second charge. Lubricating oil shall be of a type and grade recommended by the manufacturer for each compressor. Where color leak indicator dye is incorporated, charge shall be in accordance with manufacturer's recommendation.

2.12.2 Fans

Fan wheel shafts shall be supported by either maintenance-accessible lubricated antifriction block-type bearings, or permanently lubricated ball bearings. Unit fans shall be selected to produce the cfm required at the fan total pressure. Motor starters, if applicable, shall be magnetic

across-the-line type with a totally enclosed enclosure. Thermal overload protection shall be of the manual or automatic-reset type. Fan wheels or propellers shall be constructed of aluminum or galvanized steel. Centrifugal fan wheel housings shall be of galvanized steel, and both centrifugal and propeller fan casings shall be constructed of aluminum or galvanized steel. Steel elements of fans, except fan shafts, shall be hot-dipped galvanized after fabrication or fabricated of mill galvanized steel. Mill-galvanized steel surfaces and edges damaged or cut during fabrication by forming, punching, drilling, welding, or cutting shall be recoated with an approved zinc-rich compound. Fan wheels or propellers shall be statically and dynamically balanced. Forward curved fan wheels shall be limited to 25 inches. Direct-drive fan motors shall be of the multiple-speed variety. Belt-driven fans shall have adjustable sheaves to provide not less than 20 percent fan-speed adjustment. The sheave size shall be selected so that the fan speed at the approximate midpoint of the sheave adjustment will produce the specified air quantity. Centrifugal scroll-type fans shall be provided with streamlined orifice inlet and V-belt drive. Each drive will be independent of any other drive. Propeller fans shall be direct-drive drive type with fixed pitch blades. V-belt driven fans shall be mounted on a corrosion protected drive shaft supported by either maintenance-accessible lubricated antifriction block-type bearings, or permanently lubricated ball bearings. Each drive will be independent of any other drive. Drive bearings shall be protected with water slingers or shields. V-belt drives shall be fitted with guards where exposed to contact by personnel and fixed pitchsheaves.

2.12.3 Primary/Supplemental Heating

2.12.3.1 Not Used

2.12.4 Air Filters

Air filters shall be listed in accordance with requirements of UL 900, except high efficiency particulate air filters of 99.97 percent efficiency by the DOP Test Method shall be as listed under the label service and shall meet the requirements of UL 586.

2.12.4.1 Extended Surface Pleated Panel Filters

Filters shall be 2 inch depth sectional type of the size indicated and shall have an average efficiency of 25 to 30 percent when tested in accordance with ASHRAE 52.1. Initial resistance at 500 feet per minute will not exceed 0.36 inches water gauge. Filters shall be UL Class 2. Media shall be nonwoven cotton and synthetic fiber mat. A wire support grid bonded to the media shall be attached to a moisture resistant fiberboard frame. Four edges of the filter media shall be bonded to the inside of the frame to prevent air bypass and increase rigidity.

2.12.4.2 Not Used

2.12.4.3 Not Used

2.12.5 Coil Frost Protection

Each circuit shall be provided with a coil frost protection system which is a manufacturer's standard. The coil frost protection system shall use a temperature sensor in the suction line of the compressor to shut the compressor off when coil frosting occurs. Timers shall be used to prevent the compressor from rapid cycling.

2.12.6 Not Used

2.12.6.1 Not Used

2.12.6.2 Not Used
2.12.6.3 Not Used

2.12.6.4 Not Used

2.12.7 Not Used

2.12.8 Not Used

2.12.9 Cabinet Construction

Casings for the specified unitary equipment shall be constructed of galvanized steel or aluminum sheet metal and galvanized or aluminum structural members. Minimum thickness of single wall exterior surfaces shall be 18 gauge galvanized steel or 071 inch thick aluminum on units with a capacity above 20 tons and 20 gauge galvanized steel or 0.064 inch thick aluminum on units with a capacity less than 20 tons. Casing shall be fitted with lifting provisions, access panels or doors, fan vibration isolators, electrical control panel, corrosion-resistant components, structural support members, insulated condensate drip pan and drain, and internal insulation in the cold section of the casing. Where double-wall insulated construction is proposed, minimum exterior galvanized sheet metal thickness shall be 20 gauge. Provisions to permit replacement of major unit components shall be incorporated. Penetrations of cabinet surfaces, including the floor, shall be sealed. Unit shall be fitted with a drain pan which extends under all areas where water may accumulate. Drain pan shall be fabricated from Type 300 stainless steel, galvanized steel with protective coating as required, or an approved plastic material. Pan insulation shall be water impervious. Extent and effectiveness of the insulation of unit air containment surfaces shall prevent, within limits of the specified insulation, heat transfer between the unit exterior and ambient air, heat transfer between the two conditioned air streams, and condensation on surfaces. Insulation shall conform to ASTM C 1071. Paint and finishes shall comply with the requirements specified in paragraph "Factory Coating".

2.12.9.1 Indoor Cabinet

Indoor cabinets shall be suitable for the specified indoor service and enclose all unit components.2.12.9.2 Outdoor Cabinet

Outdoor cabinets shall be suitable for outdoor service with a weathertight, insulated and corrosion-protected structure. Cabinets constructed exclusively for indoor service which have been modified for outdoor service are not acceptable.

2.12.10 Not Used

2.13 Not Used

2.14 Not Used

2.15 Not Used

2.16 Not USed

2.17 Not Used

2.18 Not Used

2.19 Not Used

2.20 Not used

2.21 Not Used

2.21.1 Not Used
2.21.2 Not Used

2.22 Not Used

2.22.1 Not Used
2.22.2 Not Used

2.23 Not Used

2.24 TEMPERATURE CONTROLS

Temperature controls shall be in accordance with Section 15950HEATING, VENTILATING AND AIR CONDITIONING HVAC CONTROL SYSTEMS.

2.25 DUCTWORK COMPONENTS

2.25.1 Metal Ductwork

Every aspect of metal ductwork construction, including fittings and components, shall comply with SMACNA TAB HVAC Sys unless otherwise specified. Elbows shall be radius type with a centerline radius of 1-1/2 times the width or diameter of the duct where space permits. Otherwise, elbows having a minimum radius equal to the width or diameter of the duct or square elbows with factory fabricated turning vanes may be used. Static pressure Class 1/2, 1, and 2 inch w.g. ductwork shall meet the requirements of Seal Class C. Class 3 through 10 inch shall meet the requirements of Seal Class A. Sealants shall conform to fire hazard classification specified in Section 15080 THERMAL INSULATION FOR MECHANICAL SYSTEMS. Pressure sensitive tape shall not be used as a sealant. Spiral lock seam duct, and flat oval shall be made with duct sealant and locked with not less than 3 equally spaced drive screws or other approved methods indicated in SMACNA TAB HVAC Sys. The sealant shall be applied to the exposed male part of the fitting collar so that the sealer will be on the inside of the joint and fully protected by the metal of the duct fitting. One brush coat of the sealant shall be applied over the outside of the joint to at least 2 inch band width covering all screw heads and joint gap. Dents in the male portion of the slip fitting collar will not be acceptable.

2.25.1.1 Transitions

Diverging air flow transitions shall be made with each side pitched out a maximum of 15 degrees, for an included angle of 30 degrees. Transitions for converging air flow shall be made with each side pitched in a maximum of 30 degrees, for an included angle of 60 degrees, or shall be as

indicated. Factory-fabricated reducing fittings for systems using round duct sections when formed to the shape of the ASME short flow nozzle, need not comply with the maximum angles specified.

2.25.1.2 Metallic Flexible Duct

Metallic type duct shall be single-ply galvanized steel. Duct shall be of corrugated/interlocked, folded and knurled type seam construction, bendable without damage through 180 degrees with a throat radius equal to 1/2 duct diameter. Duct shall conform to UL 181 and shall be rated for positive or negative working pressure of 15 inches water gauge at 350 degrees F when duct is aluminum, and 650 degrees F when duct is galvanized steel or stainless steel.

2.25.1.3 Insulated Nonmetallic Flexible Duct Runouts

Flexible duct runouts shall be used only where indicated. Runouts shall not exceed 10 feet in length, shall be preinsulated, factory fabricated, and comply with NFPA 90A and UL 181. Either field or factory applied vapor barrier shall be provided. Where coil induction or high velocity units are supplied with vertical air inlets, a streamlined and vaned and mitered elbow transition piece shall be provided for connection to the flexible duct or hose. The last elbow to these units, other than the vertical air inlet type, shall be a die-stamped elbow and not a flexible connector. Insulated flexible connectors may be used as runouts. The insulation material surface shall not be exposed to the air stream.

2.25.1.4 General Service Duct Connectors

A flexible duct connector approximately 6 inches in width shall be provided where sheet metal connections are made to fans or where ducts of dissimilar metals are connected. For round/oval ducts, the flexible material shall be secured by stainless steel or zinc-coated, iron clinch-type draw bands. For rectangular ducts, the flexible material locked to metal collars shall be installed using normal duct construction methods. The composite connector system shall comply with UL 214 and be classified as "flame-retarded fabrics" in UL Bld Mat Dir.

2.25.2 Not Used

2.25.3 Ductwork Insulation

Ductwork insulation and related materials shall conform to the requirements of Section 15080 THERMAL INSULATION FOR MECHANICAL SYSTEMS.

2.25.4 Ductwork Accessories

2.25.4.1 Duct Access Doors

Access doors shall be provided in ductwork where indicated and at all air flow measuring devices, automatic dampers, fire dampers, coils, thermostats, and other apparatus requiring service and inspection in the duct system, and unless otherwise shown, shall conform to SMACNA TAB HVAC Sys. Access doors shall be provided upstream and downstream of air flow measuring primaries and heating and cooling coils. Doors shall be minimum 15 x 18 inches, unless otherwise shown. Where duct size will not accommodate this size door, the doors shall be made as large as practicable. Doors 24 x 24 inches or larger shall be provided with fasteners operable from both sides. Doors in insulated ducts shall be the

insulated type.

2.25.4.2 Fire Dampers

Fire dampers shall be 1-1/2 hour fire rated unless otherwise indicated. Fire dampers shall conform to the requirements of NFPA 90A and UL 555. Fire dampers shall be automatic operating type and shall have a dynamic rating suitable for the maximum air velocity and pressure differential to which it will be subjected. Fire dampers shall be approved for the specific application and shall be installed according to their listing. Fire dampers shall be equipped with a steel sleeve or adequately sized frame installed in such a manner that disruption of the attached ductwork, if any, will not impair the operation of the damper. Sleeves or frames shall be equipped with perimeter mounting angles attached on both sides of the wall or floor opening. Ductwork in fire-rated floor-ceiling or roof-ceiling assembly systems with air ducts that pierce the ceiling of the assemblies shall be constructed in conformance with UL Fire Resist Dir. Fire dampers shall be curtain type with damper blades out of the air stream ormulti-blade type. Dampers shall not reduce the duct or the air transfer opening cross-sectional area. Dampers shall be installed so that the centerline of the damper depth or thickness is located in the centerline of the wall, partition or floor slab depth or thickness. Unless otherwise indicated, the installation details given in SMACNA Install Fire Damp HVAC and in manufacturer's instructions for fire dampers shall be followed.

2.25.4.3 Splitters and Manual Balancing Dampers

Splitters and manual balancing dampers shall be furnished with accessible operating mechanisms. Where operators occur in finished portions of the building, operators shall be chromium plated with all exposed edges rounded. Splitters shall be operated by quadrant operators or 3/16 inch rod brought through the side of the duct with locking setscrew and bushing. Two rods are required on splitters over 8 inches. Manual volume control dampers shall be operated by locking-type quadrant operators. Dampers and splitters shall be 2 gauges heavier than the duct in which installed. Unless otherwise indicated, multileaf dampers shall be opposed blade type with maximum blade width of 12 inches. Access doors or panels shall be provided for all concealed damper operators and locking setscrews. Unless otherwise indicated, the locking-type quadrant operators for dampers, when installed on ducts to be thermally insulated, shall be provided with stand-off mounting brackets, bases, or adapters to provide clearance between the duct surface and the operator not less than the thickness of the insulation. Stand-off mounting items shall be integral with the operator or standard accessory of the damper manufacturer. Volume dampers shall be provided where indicated.

2.25.4.4 Air Deflectors and Branch Connections

Air deflectors shall be provided at all duct mounted supply outlets, at all takeoff or extension collars to supply outlets, at all duct branch takeoff connections, and at all 90 degree elbows, as well as at all locations as indicated on the drawings or shown in the Sheet Metal and Air Contractors National Association manuals. Air deflectors, except those installed in 90 degree elbows, shall be provided with an approved means of adjustment. Adjustment shall be made from easily accessible means inside the duct or from an adjustment with sturdy lock on the face of the duct. When installed on ducts to be thermally insulated, external adjustments shall be provided with stand-off mounting brackets, integral with the adjustment device, to provide clearance between the duct surface and the adjustment

device not less than the thickness of the thermal insulation. Air deflectors shall be factory-fabricated units consisting of curved turning vanes or louver blades designed to provide uniform air distribution and change of direction with minimum turbulence or pressure loss. Air deflectors shall be factory or field assembled. Blade air deflectors, also called blade air extractors, shall be approved factory fabricated units consisting of equalizing grid and adjustable blade and lock. Adjustment shall be easily made from the face of the diffuser or by position adjustment and lock external to the duct. Stand-off brackets shall be provided on insulated ducts and are described herein before. Fixed air deflectors, also called turning vanes, shall be provided in all 90 degree elbows. Turning vanes shall be designed as shown in the Sheet Metal and Air Condition Contractors National Association manuals.

2.25.5 Duct Sleeves, Framed Prepared Openings, Closure Collars

2.25.5.1 Duct Sleeves

Duct sleeves shall be provided for all round ducts 15 inchesin diameter or less passing through floors, walls, ceilings, or roof, and installed during construction of the floor, wall, ceiling, or roof. Round ducts larger than 15 inches in diameter and all square, rectangular, and oval ducts passing through floors, walls, ceilings, or roof shall be installed through framed prepared openings. The Contractor shall be responsible for the proper size and location of sleeves and prepared openings. Sleeves and framed openings are also required where grilles, registers, and diffusers are installed at the openings. Framed prepared openings shall be fabricated from 20 gauge galvanized steel, unless otherwise indicated. Where sleeves are installed in bearing walls or partitions, black steel pipe, ASTM A 53, Schedule 20 shall be used. Sleeve shall provide 1 inch clearance between the duct and the sleeve or 1 inch clearance between the insulation and the sleeve for insulated ducts.

2.25.5.2 Framed Prepared Openings

Openings shall have 1 inch clearance between the duct and the opening or 1 inch clearance between the insulation and the opening for insulated ducts.

2.25.5.3 Closure Collars

Collars shall be fabricated of galvanized sheet metal not less than 4 inches wide, unless otherwise indicated, and shall be installed on exposed ducts on each side of walls or floors where sleeves or prepared openings are provided. Collars shall be installed tight against surfaces. Collars shall fit snugly around the duct or insulation. Sharp edges of the collar around insulated duct shall be ground smooth to preclude tearing or puncturing the insulation covering or vapor barrier. Collars for round ducts 15 inches in diameter or less shall be fabricated from 20 gauge galvanized steel. Collars for round ducts larger than 15 inches and all square, and rectangular ducts shall be fabricated from 18 gauge galvanized steel. Collars shall be installed with fasteners on maximum 6 inch centers, except that not less than 4 fasteners shall be used.

2.25.6 Not Used

2.25.7 Diffusers, Registers, and Grilles

Units shall be factory-fabricated of steel, corrosion-resistant steel, or aluminum and shall distribute the specified quantity of air evenly over

space intended without causing noticeable drafts, air movement faster than 50 fpm in occupied zone, or dead spots anywhere in the conditioned area. Outlets for diffusion, spread, throw, and noise level shall be as required for specified performance. Performance shall be certified in accordance with ADC 1062:GRD. Inlets and outlets shall be sound rated and certified in accordance with ADC 1062:GRD. Sound power level shall be as indicated. Diffusers and registers shall be provided with volume damper with accessible operator, unless otherwise indicated; or if standard with the manufacturer, an automatically controlled device will be acceptable. Volume dampers shall be opposed blade type for all diffusers and registers, except linear slot diffusers. Linear slot diffusers shall be provided with round or elliptical balancing dampers. Where the inlet and outlet openings are located less than 7 feet above the floor, they shall be protected by a grille or screen in accordance with NFPA 90A.

2.25.7.1 Diffusers

Diffuser types shall be as indicated. Ceiling mounted units shall be furnished with antismudge devices, unless the diffuser unit minimizes ceiling smudging through design features. Diffusers shall be provided with air deflectors of the type indicated. Air handling troffers or combination light and ceiling diffusers shall conform to the requirements of UL Elec Const Dir for the interchangeable use as cooled or heated air supply diffusers or return air units. Ceiling mounted units shall be installed with rims tight against ceiling. Sponge rubber gaskets shall be provided between ceiling and surface mounted diffusers for air leakage control. Suitable trim shall be provided for flush mounted diffusers. Duct collar connecting the duct to diffuser shall be airtight and shall not interfere with volume controller. Return or exhaust units shall be similar to supply diffusers.

2.25.7.2 Registers and Grilles

Units shall be four-way directional-control type, except that return and exhaust registers may be fixed horizontal or vertical louver type similar in appearance to the supply register face. Registers shall be provided with sponge-rubber gasket between flanges and wall or ceiling. Wall supply registers shall be installed at least 6 inches below the ceiling unless otherwise indicated. Return and exhaust registers shall be located 6 inches above the floor unless otherwise indicated. Four-way directional control may be achieved by a grille face which can be rotated in 4 positions or by adjustment of horizontal and vertical vanes. Grilles shall be as specified for registers, without volume control damper.

2.25.8 Not Used

2.26 Not Used

2.27 Not Used

2.27.1 Not Used

2.27.2 Not Used
2.27.3 Not Used

2.27.4 Not Used

2.27.5 Not Used

2.27.6 Not Used

2.27.7 Not Used

2.27.7.1 Not Used

2.27.7.2 Not Used2.27.7.3 Not Used

2.27.8 Not Used

2.27.8.1 Not Used

2.27.8.2 Not Used2.28 Not Used

2.29 FABRICATION

2.29.1 Factory Coating

Unless otherwise specified, equipment and component items, when fabricated from ferrous metal, shall be factory finished with the manufacturer's standard finish, except that items located outside of buildings shall have weather resistant finishes that will withstand 125 hours exposure to the salt spray test specified in ASTM B 117 using a 25 percent sodium chloride solution. Immediately after completion of the test, the specimen shall show no signs of blistering, wrinkling, cracking, or loss of adhesion and no sign of rust creepage beyond 1/8 inch on either side of the scratch mark. Cut edges of galvanized surfaces where hot-dip galvanized sheet steel is used shall be coated with a zinc-rich coating conforming to ASTM D 520, Type I.

2.29.2 Field Painting

Painting required for surfaces not otherwise specified, and finish painting of items only primed at the factory are specified in Section 09900PAINTING, GENERAL.

2.29.2.1 Color Coding

Color coding for piping identification is specified in Section 09900 PAINTING, GENERAL.

2.29.2.2 Not Used

2.30 ELECTRIC CABINET UNIT HEATERS

1. Housing:
   a. Steel with discharge grille and air intake.
   b. Housing panels shall be removable for access to internal parts for servicing.
   c. Unit shall have a factory-baked enamel finish, with color selected by Architect.
2. Heating Element(s):
   a. UL listed, pre-wired electric metal sheath type heating elements, anchored to allow for quiet expansion and contraction.
   b. Each element shall have built-in thermal overheat protection.
3. Fans and Motors: Centrifugal blower with totally enclosed, permanently lubricated direct drive motor.
4. Accessories:
   a. Integral thermostat , tamper resistant

b. Built-in power disconnect switch
c. Built-in fan delay switch
5. Performance: See schedule on drawings for size and capacities.
6. Acceptable Manufacturers:
a. QMARK :
b. Approved Equal

PART 3 EXECUTION

3.1 INSTALLATION

Work shall be performed in accordance with the manufacturer's published diagrams, recommendations, and equipment warranty requirements. Where equipment is specified to conform to the requirements of ASME BPV VIII Div 1 and ASME BPV IX, the design, fabrication, and installation of the system shall conform to ASME BPV VIII Div 1 and ASME BPV IX.

3.1.1 Not Used

3.1.2 Not Used

3.1.3 Building Surface Penetrations

Sleeves in nonload bearing surfaces shall be galvanized sheet metal, conforming to ASTM A 653/A 653M, Coating Class G-90, 20 gauge. Sleeves in load bearing surfaces shall be uncoated carbon steel pipe, conforming to ASTM A 53, Standard weight. Sealants shall be applied to moisture and oil-free surfaces and elastomers to not less than 1/2 inch depth. Sleeves shall not be installed in structural members.

3.1.3.1 Not Used

3.1.3.2 General Service Areas

Each sleeve shall extend through its respective wall, floor, or roof, and shall be cut flush with each surface. Pipes passing through concrete or masonry wall or concrete floors or roofs shall be provided with pipe sleeves fitted into place at the time of construction. Sleeves shall be of such size as to provide a minimum of 1/4 inch all-around clearance between bare pipe and sleeves or between jacketed-insulation and sleeves. Except in pipe chases or interior walls, the annular space between pipe and sleeve or between jacket over-insulation and sleeve shall be sealed in accordance with Section 07900 JOINT SEALING.

3.1.3.3 Waterproof Penetrations

Pipes passing through roof or floor waterproofing membrane shall be installed through a 17-ounce copper sleeve, or a 0.032 inch thick aluminum sleeve, each within an integral skirt or flange. Flashing sleeve shall be suitably formed, and skirt or flange shall extend not less than 8 inches from the pipe and be set over the roof or floor membrane in a troweled coating of bituminous cement. The flashing sleeve shall extend up the pipe a minimum of 2 inches above the roof or floor penetration. The annular space between the flashing sleeve and the bare pipe or between the flashing sleeve and the metal-jacket-covered insulation shall be sealed as indicated. Penetrations shall be sealed by either one of the following methods.

a. Waterproofing Clamping Flange: Pipes up to and including 10

inches in diameter passing through roof or floor waterproofing membrane may be installed through a cast iron sleeve with caulking recess, anchor lugs, flashing clamp device, and pressure ring with brass bolts. Waterproofing membrane shall be clamped into place and sealant shall be placed in the caulking recess.

b. Modular Mechanical Type Sealing Assembly: In lieu of a waterproofing clamping flange and caulking and sealing of annular space between pipe and sleeve or conduit and sleeve, a modular mechanical type sealing assembly may be installed. Seals shall consist of interlocking synthetic rubber links shaped to continuously fill the annular space between the pipe/conduit and sleeve with corrosion protected carbon steel bolts, nuts, and pressure plates. Links shall be loosely assembled with bolts to form a continuous rubber belt around the pipe with a pressure plate under each bolt head and each nut. After the seal assembly is properly positioned in the sleeve, tightening of the bolt shall cause the rubber sealing elements to expand and provide a watertight seal rubber sealing elements to expand and provide a watertight seal between the pipe/conduit seal between the pipe/conduit and the sleeve. Each seal assembly shall be sized as recommended by the manufacturer to fit the pipe/conduit and sleeve involved. The Contractor electing to use the modular mechanical type seals shall provide sleeves of the proper diameters.

3.1.3.4 Fire-Rated Penetrations

Penetration of fire-rated walls, partitions, and floors shall be sealed as specified in Section 07840 FIRESTOPPING.

3.1.3.5 Escutcheons

Finished surfaces where exposed piping, bare or insulated, pass through floors, walls, or ceilings, except in boiler, utility, or equipment rooms, shall be provided with escutcheons. Where sleeves project slightly from floors, special deep-type escutcheons shall be used. Escutcheon shall be secured to pipe or pipe covering.

3.1.4 Access Panels

Access panels shall be provided for all concealed valves vents, controls, and items requiring inspection or maintenance. Access panels shall be of sufficient size and located so that the concealed items may be serviced and maintained or completely removed and replaced. Access panels shall be as specified in Section 05500 MISCELLANEOUS METALS.

3.1.5 Not Used

3.1.5.1 Not Used

3.1.5.2 Not Used

3.1.5.3 Not Used

3.1.5.4 Not Used

3.1.5.5 Not Used

3.1.6 Not Used

3.1.7 Not Used

3.1.8 Not Used
3.1.9 Not Used

3.1.10 Not Used

3.1.11 Not Used

3.1.12 Not Used
3.1.13 Not Used3.1.14 Not Used

3.1.15 Metal Ductwork

Installation shall be in accordance with SMACNA TAB HVAC Sys unless otherwise indicated. Duct supports for sheet metal ductwork shall be in accordance with SMACNA TAB HVAC Sys, unless otherwise specified. Friction beam clamps indicated in SMACNA TAB HVAC Sys will not be used. Supports on the risers shall allow free vertical movement of the duct. Supports shall be attached only to structural framing members and concrete slabs. Supports shall not be anchored to metal decking unless a means is provided and approved for preventing the anchor from puncturing the metal decking. Where supports are required between structural framing members, suitable intermediate metal framing shall be provided. Where C-clamps are used, retainer clips shall be provided.

3.1.16 Not Used

3.1.17 Not Used

3.1.18 Field Applied Insulation

Field applied insulation shall be as specified in Section 15080 THERMAL INSULATION FOR MECHANICAL SYSTEMS.

3.1.19 Factory Applied Insulation

Refrigerant suction lines between an evaporator and compressors and any cold gas inlet connections to gas cooled motors and exposed chilled water lines shall be insulated with not less than 3/4 inch thick unicellular plastic foam.

3.1.20 Not Used3.2 TESTS

Tests shall be conducted in the presence of the Contracting Officer. Utilities for testing shall be provided as specified in the SPECIAL CONTRACT REQUIREMENTS. Water and electricity required for the tests will be furnished by the Government. Any material, equipment, instruments, and personnel required for the test shall be provided by the Contractor. The services of a qualified technician shall be provided as required to perform all tests and procedures indicated herein. Field tests shall be coordinated with Section 15990 TESTING, ADJUSTING, AND BALANCING OF HVAC SYSTEMS.

3.2.1 Not Used

3.2.2 Not Used
3.2.2.1 Not Used

3.2.2.2 Not Used
3.2.2.3 Not Used
3.2.2.4 Not Used
3.2.2.5 Not Used
3.2.2.6 Not Used

3.2.3 Ductwork Leak Tests

Ductwork leak test shall be performed for the entire air distribution system, including fans, coils, filters, etc., Test procedure, apparatus, and report shall conform to SMACNA Leakage Test Mnl. Ductwork leak test shall be completed with satisfactory results prior to applying insulation to ductwork exterior.

3.2.4 Not Used

3.2.5 Not Used

3.2.6 Not Used3.3 Not Used

3.4 CLEANING AND ADJUSTING

3.4.1 Not Used

3.4.2 Ductwork

Prior to testing, inside of ducts, plenums, and casing shall be thoroughly cleaned of all debris and blown free of small particles of rubbish and dust and then vacuum cleaned before installing outlet faces. Temporary filters shall be provided for fans that are operated during construction. New filters shall be installed after all construction dirt has been removed from the building and the ducts, plenum, casings, and other items specified have been vacuum cleaned. Fans shall be adjusted to the speed indicated by the manufacturer to meet specified conditions.

3.4.3 Not Used

3.4.4 Testing, Adjusting, and Balancing

Testing, adjusting, and balancing shall be as specified in Section 15990 TESTING, ADJUSTING AND BALANCING OF HVAC SYSTEMS.

3.5 DEMONSTRATIONS

Contractor shall conduct a training course for the operating staff as designated by the Contracting Officer. The training period shall consist of a total 40 hours of normal working time and start after the system is functionally completed but prior to final acceptance tests. The field instructions shall cover all of the items contained in the approved operation and maintenance manuals as well as demonstrations of routine maintenance operations.

-- End of Section --

This page was intentionally left blank for duplex printing.

SECTION TABLE OF CONTENTS

DIVISION 15 - MECHANICAL

SECTION 15895

AIR SUPPLY, DISTRIBUTION, VENTILATION, AND EXHAUST SYSTEM

02/94

PART 1 GENERAL

1.1 REFERENCES
1.2 COORDINATION OF TRADES
1.3 DELIVERY AND STORAGE
1.4 SUBMITTALS

PART 2 PRODUCTS

2.1 STANDARD PRODUCTS
2.2 ASBESTOS PROHIBITION
2.3 NAMEPLATES
2.4 EQUIPMENT GUARDS AND ACCESS
2.5 Not Used
2.6 ELECTRICAL WORK
2.7 CONTROLS
2.8 DUCTWORK COMPONENTS
2.8.1 Metal Ductwork
2.8.1.1 Transitions
2.8.1.2 Not Used
2.8.1.3 Insulated Nonmetallic Flexible Duct Runouts
2.8.1.4 General Service Duct Connectors
2.8.2 Not Used
2.8.3 Ductwork Accessories
2.8.3.1 Duct Access Doors
2.8.3.2 Fire/Smoke Dampers
2.8.3.3 Splitters and Manual Balancing Dampers
2.8.3.4 Air Deflectors and Branch Connections
2.8.4 Duct Sleeves, Framed Prepared Openings, Closure Collars
2.8.4.1 Duct Sleeves
2.8.4.2 Framed Prepared Openings
2.8.4.3 Closure Collars
2.8.5 Plenums and Casings for Field-Fabricated Units
2.8.5.1 Plenum and Casings
2.8.5.2 Casing
2.8.5.3 Access Doors
2.8.5.4 Factory-Fabricated Insulated Sheet Metal Panels
2.8.5.5 Not Used
2.8.6 Not Used
2.8.7 Diffusers, Registers, and Grilles
2.8.7.1 Diffusers
2.8.7.2 Registers and Grilles
2.8.8 Not Used
2.8.9 Not Used
2.8.10 Bird Screens and Frames
2.8.11 Not Used

2.9 AIR SYSTEMS EQUIPMENT
2.9.1 Fans
2.9.1.1 Centrifugal Fans
2.9.1.2 Not Used
2.9.1.3 Not Used
2.9.1.4 Not used
2.9.1.5 Not Used
2.9.1.6 Centrifugal Type Power Roof Ventilators
2.9.1.7 Not Used
2.9.1.8 Not Used
2.9.1.9 Not Used
2.9.2 Not Used
2.9.2.1 Not Used
2.9.2.2 Not Used
2.9.3 Air Filters
2.9.3.1 Extended Surface Pleated Panel Filters
2.9.3.2 Not Used
2.9.3.3 Not Used
2.9.3.4 Not Used
2.9.3.5 Not Used
2.9.3.6 Not Used
2.9.3.7 Not Used
2.9.3.8 Not Used
2.9.3.9 Not Used
2.9.3.10 Not Used
2.10 Not Used
2.11 Not Used
2.12 Not Used
2.13 Not Used

PART 3 EXECUTION

3.1 INSTALLATION
3.1.1
3.1.1.1 Not Used
3.1.2 Not Used
3.1.2.1 Not Used
3.1.2.2 Not Used
3.1.3 Not Used
3.1.4 Not Used
3.1.4.1 Not Used
3.1.4.2 Not Used
3.1.4.3 Not Used
3.1.5 Not Used
3.1.6 Not Used
3.1.7 Not Used
3.1.8 Not Used
3.1.9 Not Used
3.1.10 Access Panels
3.1.11 Flexible Connectors
3.1.12 Sleeved and Framed Openings
3.1.13 Metal Ductwork
3.1.14 Not Used
3.1.15 Not Used
3.1.16 Not Used
3.1.17 Not Used
3.1.18 Dust Control
3.1.19 Insulation
3.1.20 Duct Test Holes

3.1.21 Not Used
3.1.22 Power Transmission Components Adjustment
3.2 Not Used
3.3 Not Used
3.4 DUCTWORK LEAK TEST
3.5 CLEANING AND ADJUSTING
3.6 TESTING, ADJUSTING, AND BALANCING
3.7 PERFORMANCE TESTS
3.8 FIELD TRAINING

-- End of Section Table of Contents --

SECTION 15895

AIR SUPPLY, DISTRIBUTION, VENTILATION, AND EXHAUST SYSTEM
02/94

PART 1 GENERAL

1.1 REFERENCES

The publications listed below form a part of this specification to the extent referenced. The publications are referred to in the text by basic designation only.

AIR CONDITIONING AND REFRIGERATION INSTITUTE (ARI)

ARI Guideline D	(1996) Application and Installation of Central Station Air-Handling Units

AIR MOVEMENT AND CONTROL ASSOCIATION (AMCA)

AMCA ANSI/AMCA 210	(1985) Laboratory Methods of Testing Fans for Rating
AMCA Std 300	(1996) Reverberant Room Method for Sound Testing of Fans

AMERICAN BEARING MANUFACTURERS ASSOCIATION (AFBMA)

AFBMA ANSI B3.15/AFBMA Std 9	(1990) Load Ratings and Fatigue Life for Ball Bearings
AFBMA ANSI B3.16/AFBMA Std 11	(1990) Load Ratings and Fatigue Life for Roller Bearings

AMERICAN SOCIETY FOR TESTING AND MATERIALS (ASTM)

ASTM A 53	(1997) Pipe, Steel, Black and Hot-Dipped, Zinc-Coated, Welded and Seamless
ASTM A 167	(1996) Stainless and Heat-Resisting Chromium-Nickel Steel Plate, Sheet, and Strip
ASTM E 437	(1992) Industrial Wire Cloth and Screens (Square Opening Series)

AMERICAN SOCIETY OF HEATING, REFRIGERATING AND AIR-CONDITIONING ENGINEERS (ASHRAE)

ASHRAE 52.1	(1992) Gravimetric and Dust-Spot Procedures for Testing Air-Cleaning Devices Used in General Ventilation for Removing Particulate Matter

ASHRAE 62	(1989) Ventilation for Acceptable Indoor Air Quality
ASHRAE 70	(1991) Method of Testing for Rating the Performance of Air Outlets and Inlets

NATIONAL ELECTRICAL MANUFACTURERS ASSOCIATION (NEMA)

NEMA MG 1	(1993; Rev 1; Rev 2; Rev 3) Motors and Generators

NATIONAL FIRE PROTECTION ASSOCIATION (NFPA)

NFPA 90A	(1996) Installation of Air Conditioning and Ventilating Systems

SHEET METAL AND AIR CONDITIONING CONTRACTORS' NATIONAL ASSOCIATION (SMACNA)

SMACNA Install Fire Damp HVAC	(1992) Fire, Smoke and Radiation Damper Installation Guide for HVAC Systems
SMACNA HVAC Duct Const Stds	(1995; Addenda Nov 1997) HVAC Duct Construction Standards - Metal and Flexible
SMACNA Leakage Test Mnl	(1985) HVAC Air Duct Leakage Test Manual

UNDERWRITERS LABORATORIES (UL)

UL 181	(1996; Rev Oct 1996) Factory-Made Air Ducts and Air Connectors
UL 214	(1997) Tests for Flame-Propagation of Fabrics and Films
UL 555	(1995) Fire Dampers
UL 586	(1996) High-Efficiency, Particulate, Air Filter Units
UL 900	(1994; Rev thru Apr 1997) Test Performance of Air Filter Units
UL Bld Mat Dir	(1998) Building Materials Directory
UL Elec Const Dir	(1997; Supple) Electrical Construction Equipment Directory
UL Fire Resist Dir	(1997) Fire Resistance Directory (2 Vol.)

1.2 COORDINATION OF TRADES

Ductwork, piping offsets, fittings, and accessories shall be furnished as required to provide a complete installation and to eliminate interference with other construction.

1.3 DELIVERY AND STORAGE

Equipment delivered and placed in storage shall be stored with protection from the weather, humidity and temperature variations, dirt and dust, or other contaminants.

1.4 SUBMITTALS

Government approval is required for submittals with a "GA" designation; submittals having an "FIO" designation are for information only. The following shall be submitted in accordance with Section 01330 SUBMITTAL PROCEDURES:

SD-03 Product Data

Components and Equipment Data; G-AE.

Manufacturer's catalog data shall be included with the detail drawings for the following items. The data shall be highlighted to show model, size, options, etc., that are intended for consideration. Data shall be adequate to demonstrate compliance with contract requirements for the following:

a. Ductwork Components
b. Air Systems Equipment

Test Schedules; .

Proposed test schedules for hydrostatic test of piping, ductwork leak test, and performance tests, at least 2 weeks prior to the start of related testing.

Field Training Schedule; .

Proposed schedule for field training, at least 2 weeks prior to the start of related training.

Similar Services; .

Statement demonstrating successful completion of similar services on at least 5 projects of similar size and scope, at least 2 weeks prior to submittal of other items required by this section.

SD-06 Test Reports

Test Reports; .

Test reports for the piping hydrostatic test, ductwork leak test, and performance tests in booklet form, upon completion of testing. Reports shall document phases of tests performed including initial test summary, repairs/adjustments made, and final test results.

SD-07 Certificates

Bolts; .

Written certification from the bolt manufacturer that the bolts furnished comply with the requirements of this specification. The certification shall include illustrations of product markings, and the number of each type of bolt to be furnished.

SD-08 Manufacturer's Instructions

Test Procedures; .

Proposed test procedures for piping hydrostatic test, ductwork leak test, and performance tests of systems, at least 2 weeks prior to the start of related testing.

Welding Procedures; .

A copy of qualified welding procedures, at least 2 weeks prior to the start of welding operations.

System Diagrams; G-AE.

Proposed diagrams, at least 2 weeks prior to start of related testing. System diagrams that show the layout of equipment, piping, and ductwork, and typed condensed operation manuals explaining preventative maintenance procedures, methods of checking the system for normal, safe operation, and procedures for safely starting and stopping the system shall be framed under glass or laminated plastic. After approval, these items shall be posted where directed.

SD-10 Operation and Maintenance Manuals

Air Supply, Distribution, Ventilation, and Exhaust Manuals; .

Six manuals listing step-by-step procedures required for system startup, operation, shutdown, and routine maintenance, at least 2 weeks prior to field training. The manuals shall include the manufacturer's name, model number, parts list, list of parts and tools that should be kept in stock by the owner for routine maintenance including the name of a local supplier, simplified wiring and controls diagrams, troubleshooting guide, and recommended service organization (including address and telephone number) for each item of equipment. Each service organization submitted shall be capable of providing 4 hour onsite response to a service call on an emergency basis.

PART 2 PRODUCTS

2.1 STANDARD PRODUCTS

Components and equipment shall be standard products of a manufacturer regularly engaged in the manufacturing of products that are of a similar material, design and workmanship. The standard products shall have been in satisfactory commercial or industrial use for 2 years before bid opening. The 2-year experience shall include applications of components and equipment under similar circumstances and of similar size. The 2 years must be satisfactorily completed by a product which has been sold or is offered for sale on the commercial market through advertisements, manufacturers' catalogs, or brochures. Products having less than a 2-year field service record will be acceptable if a certified record of

satisfactory field operation, for not less than 6000 hours exclusive of the manufacturer's factory tests, can be shown. The equipment items shall be supported by a service organization.

2.2 ASBESTOS PROHIBITION

Asbestos and asbestos-containing products shall not be used.

2.3 NAMEPLATES

Equipment shall have a nameplate that identifies the manufacturer's name, address, type or style, model or serial number, and catalog number.

2.4 EQUIPMENT GUARDS AND ACCESS

Belts, pulleys, chains, gears, couplings, projecting setscrews, keys, and other rotating parts exposed to personnel contact shall be fully enclosed or guarded according to OSHA requirements. High temperature equipment and piping exposed to contact by personnel or where it creates a potential fire hazard shall be properly guarded or covered with insulation of a type specified.

2.5 Not Used

2.6 ELECTRICAL WORK

Electrical motor-driven equipment specified shall be provided complete with motor, motor starter, and controls. Unless otherwise specified, electric equipment, including wiring and motor efficiencies, shall be according to Section 16415 ELECTRICAL WORK, INTERIOR. Electrical characteristics and enclosure type shall be as shown. Unless otherwise indicated, motors of 1 hp and above shall be high efficiency type. Motor starters shall be provided complete with thermal overload protection and other appurtenances necessary. Each motor shall be according to NEMA MG 1 and shall be of sufficient size to drive the equipment at the specified capacity without exceeding the nameplate rating of the motor. Manual or automatic control and protective or signal devices required for the operation specified, and any control wiring required for controls and devices, but not shown, shall be provided. Where two-speed or variable-speed motors are indicated, solid-state variable-speed controller may be provided to accomplish the same function. Solid-state variable-speed controllers shall be utilized for motors rated 10 hp or less. Adjustable frequency drives shall be used for larger motors.

2.7 CONTROLS

Controls shall be provided as specified in Section 15950 HEATING, VENTILATING AND AIR CONDITIONING (HVAC) CONTROL SYSTEMS.

2.8 DUCTWORK COMPONENTS

2.8.1 Metal Ductwork

All aspects of metal ductwork construction, including all fittings and components, shall comply with SMACNA HVAC Duct Const Stds unless otherwise specified. Elbows shall be radius type with a centerline radius of 1-1/2 times the width or diameter of the duct where space permits. Otherwise, elbows having a minimum radius equal to the width or diameter of the duct or square elbows with factory fabricated turning vanes may be used. Static

pressure Class 1/2, 1, and 2 inch w.g. ductwork shall meet the requirements of Seal Class C. Class 3 through 10 inch shall meet the requirements of Seal Class A. Sealants shall conform to fire hazard classification specified in Section 15080 THERMAL INSULATION FOR MECHANICAL SYSTEMS. Pressure sensitive tape shall not be used as a sealant. Spiral lock seam duct, and flat oval shall be made with duct sealant and locked with not less than 3 equally spaced drive screws or other approved methods indicated in SMACNA HVAC Duct Const Stds. The sealant shall be applied to the exposed male part of the fitting collar so that the sealer will be on the inside of the joint and fully protected by the metal of the duct fitting. One brush coat of the sealant shall be applied over the outside of the joint to at least 2 inch band width covering all screw heads and joint gap. Dents in the male portion of the slip fitting collar will not be acceptable. Outdoor air intake ducts and plenums shall be fabricated with watertight soldered or brazed joints and seams.

2.8.1.1 Transitions

Diverging air flow transitions shall be made with each side pitched out a maximum of 15 degrees, for an included angle of 30 degrees. Transitions for converging air flow shall be made with each side pitched in a maximum of 30 degrees, for an included angle of 60 degrees, or shall be as indicated. Factory-fabricated reducing fittings for systems using round duct sections when formed to the shape of the ASME short flow nozzle, need not comply with the maximum angles specified.

2.8.1.2 Not Used

2.8.1.3 Insulated Nonmetallic Flexible Duct Runouts

Flexible duct runouts shall be used only where indicated. Runout length shall in no case exceed 5 feet. Runouts shall be preinsulated, factory fabricated, and shall comply with NFPA 90A and UL 181. Either field or factory applied vapor barrier shall be provided. Where coil induction or high velocity units are supplied with vertical air inlets, a streamlined and vaned and mitered elbow transition piece shall be provided for connection to the flexible duct or hose. The last elbow to these units, other than the vertical air inlet type, shall be a die-stamped elbow and not a flexible connector. Insulated flexible connectors may be used as runouts. The insulated material and vapor barrier shall conform to the requirements of Section 15080 THERMAL INSULATION FOR MECHANICAL SYSTEMS. The insulation material surface shall not be exposed to the air stream.

2.8.1.4 General Service Duct Connectors

A flexible duct connector approximately 6 inches in width shall be provided where sheet metal connections are made to fans or where ducts of dissimilar metals are connected. For round/oval ducts, the flexible material shall be secured by stainless steel or zinc-coated, iron clinch-type draw bands. For rectangular ducts, the flexible material locked to metal collars shall be installed using normal duct construction methods. The composite connector system shall comply with UL 214 and be classified as "flame-retarded fabrics" in UL Bld Mat Dir.

2.8.2 Not Used

2.8.3 Ductwork Accessories

2.8.3.1 Duct Access Doors

Access doors shall be provided in ductwork and plenums where indicated and at all air flow measuring primaries, automatic dampers, fire dampers, coils, thermostats, and other apparatus requiring service and inspection in the duct system, and unless otherwise shown, shall conform to SMACNA Duct Const Stds. Access doors shall be provided upstream and downstream of air flow measuring primaries and heating and cooling coils. Doors shall be minimum 15 x 18 inches, unless otherwise shown. Where duct size will not accommodate this size door, the doors shall be made as large as practicable. Doors 24 x 24 inches or larger shall be provided with fasteners operable from both sides. Doors in insulated ducts shall be the insulated type.

2.8.3.2 Fire/Smoke Dampers

Fire/smoke dampers shall be 1-1/2 hour fire rated unless otherwise indicated. Fire/smoke dampers shall conform to the requirements of NFPA 90A and UL 555. The Contractor shall perform the fire/smoke damper test as outlined in NFPA 90A. A pressure relief damper shall be provided upstream of the fire/smoke damper. If the ductwork connected to the fire/smoke damper is to be insulated then this pressure relief damper shall be factory insulated. Fire/smoke dampers shall be automatic operating type and shall have a dynamic rating suitable for the maximum air velocity and pressure differential to which it will be subjected. Fire/smoke dampers shall be approved for the specific application, and shall be installed according to their listing. Fire/smoke dampers shall be equipped with a steel sleeve or adequately sized frame installed in such a manner that disruption of the attached ductwork, if any, will not impair the operation of the damper. Sleeves or frames shall be equipped with perimeter mounting angles attached on both sides of the wall or floor opening. Ductwork in fire-rated floor-ceiling or roof-ceiling assembly systems with air ducts that pierce the ceiling of the assemblies shall be constructed in conformance with UL Fire Resist Dir. Fire/smoke dampers shall be multi-blade type. Dampers shall not reduce the duct or the air transfer opening cross-sectional area. Dampers shall be installed so that the centerline of the damper depth or thickness is located in the centerline of the wall, partition or floor slab depth or thickness. Unless otherwise indicated, the installation details given in SMACNA Install Fire Damp HVAC and in manufacturer's instructions for fire/smoke dampers shall be followed.

2.8.3.3 Splitters and Manual Balancing Dampers

Splitters and manual balancing dampers shall be furnished with accessible operating mechanisms. Where operators occur in finished portions of the building, operators shall be chromium plated with all exposed edges rounded. Splitters shall be operated by quadrant operators or 3/16 inch rod brought through the side of the duct with locking setscrew and bushing. Two rods are required on splitters over 8 inches. Manual volume control dampers shall be operated by locking-type quadrant operators. Dampers and splitters shall be 2 gauges heavier than the duct in which installed. Unless otherwise indicated, multileaf dampers shall be opposed blade type with maximum blade width of 12 inches. Access doors or panels shall be provided for all concealed damper operators and locking setscrews. Unless otherwise indicated, the locking-type quadrant operators for dampers, when installed on ducts to be thermally insulated, shall be provided with stand-off mounting brackets, bases, or adapters to provide clearance between the duct surface and the operator not less than the thickness of the insulation. Stand-off mounting items shall be integral with the operator or standard accessory of the damper manufacturer. Volume dampers

shall be provided where indicated.

2.8.3.4 Air Deflectors and Branch Connections

Air deflectors shall be provided at duct mounted supply outlets, at takeoff or extension collars to supply outlets, at duct branch takeoff connections, and at 90 degree elbows, as well as at locations as indicated on the drawings or otherwise specified. Conical branch connections or 45 degree entry connections may be used in lieu of deflectors or extractors for branch connections. All air deflectors, except those installed in 90 degree elbows, shall be provided with an approved means of adjustment. Adjustment shall be made from easily accessible means inside the duct or from an adjustment with sturdy lock on the face of the duct. When installed on ducts to be thermally insulated, external adjustments shall be provided with stand-off mounting brackets, integral with the adjustment device, to provide clearance between the duct surface and the adjustment device not less than the thickness of the thermal insulation. Air deflectors shall be factory-fabricated units consisting of curved turning vanes or louver blades designed to provide uniform air distribution and change of direction with minimum turbulence or pressure loss. Air deflectors shall be factory or field assembled. Blade air deflectors, also called blade air extractors, shall be approved factory fabricated units consisting of equalizing grid and adjustable blade and lock. Adjustment shall be easily made from the face of the diffuser or by position adjustment and lock external to the duct. Stand-off brackets shall be provided on insulated ducts and are described herein. Fixed air deflectors, also called turning vanes, shall be provided in 90 degree elbows.

2.8.4 Duct Sleeves, Framed Prepared Openings, Closure Collars

2.8.4.1 Duct Sleeves

Duct sleeves shall be provided for round ducts 15 inches in diameter or less passing through floors, walls, ceilings, or roof, and installed during construction of the floor, wall, ceiling, or roof. Round ducts larger than 15 inches in diameter and square, rectangular, and oval ducts passing through floors, walls, ceilings, or roof shall be installed through framed prepared openings. The Contractor shall be responsible for the proper size and location of sleeves and prepared openings. Sleeves and framed openings are also required where grilles, registers, and diffusers are installed at the openings. Framed prepared openings shall be fabricated from 20 gauge galvanized steel, unless otherwise indicated. Where sleeves are installed in bearing walls or partitions, black steel pipe, ASTM A 53, Schedule 20 shall be used. Sleeve shall provide 1 inch clearance between the duct and the sleeve or 1 inch clearance between the insulation and the sleeve for insulated ducts.

2.8.4.2 Framed Prepared Openings

Openings shall have 1 inch clearance between the duct and the opening or 1 inch clearance between the insulation and the opening for insulated ducts.

2.8.4.3 Closure Collars

Collars shall be fabricated of galvanized sheet metal not less than 4 inches wide, unless otherwise indicated, and shall be installed on exposed ducts on each side of walls or floors where sleeves or prepared openings are provided. Collars shall be installed tight against surfaces. Collars

shall fit snugly around the duct or insulation. Sharp edges of the collar around insulated duct shall be ground smooth to preclude tearing or puncturing the insulation covering or vapor barrier. Collars for round ducts 15 inches in diameter or less shall be fabricated from 20 gauge galvanized steel. Collars for round ducts larger than 15 inches and square, and rectangular ducts shall be fabricated from 18 gaugegalvanized steel. Collars shall be installed with fasteners on maximum 6 inch centers, except that not less than 4 fasteners shall be used.

2.8.5 Plenums and Casings for Field-Fabricated Units

2.8.5.1 Plenum and Casings

Plenums and casings shall be fabricated and erected as shown in SMACNA HVAC Duct Const Stds, as applicable. Unless otherwise indicated, system casing shall be constructed of not less than 16 gauge galvanized sheet steel. Cooling coil drain pans with 1 inch threaded outlet shall be provided to collect condensation from the cooling coils. Drain pans shall be fabricated of not lighter than 16 gauge steel, galvanized after fabrication or of 18 gauge corrosion-resisting sheet steel conforming to ASTM A 167, Type 304, welded and stiffened. Drain pans exposed to the atmosphere shall be thermally insulated to prevent condensation. Insulation shall be coated with a flame resistant waterproofing material. Separate drain pans shall be provided for each vertical coil section, and a separate drain line shall be provided for each pan. Pans shall be generously sized to ensure capture of entrained moisture on the downstream-air side of the coil. Openings in the casing, such as for piping connections, shall be sealed and covered to prevent air leakage. Water seal for the drain shall provide at least 2 inch water gauge greater than the maximum negative pressure in the coil space.

2.8.5.2 Casing

Casings shall be terminated at the curb line and anchored by the use of galvanized angle iron sealed and bolted to the curb, as indicated in SMACNA HVAC Duct Const Stds.

2.8.5.3 Access Doors

Access doors shall be provided in each section of the casing. Door frames shall be welded in place, and each door shall be neoprene gasketed, hinged with minimum of two brass hinges, and fastened with a minimum of two brass tension fasteners operable from inside and outside of the casing. Where possible, doors shall be 36 x 18 inches located 18 inches above the floor. Where the space available will not accommodate doors of this size, doors as large as the space will accommodate shall be provided. Doors shall swing so that fan suction or pressure holds door in closed position, and shall be airtight. A push-button station to stop the supply fan shall be located inside the casing where indicated.

2.8.5.4 Factory-Fabricated Insulated Sheet Metal Panels

Factory-fabricated components may be used for field-assembled units, provided all requirements specified for field-fabricated plenums and casings are met. Panels shall be of modular design, pretested for structural strength, thermal control, condensation control, and acoustical control. Panel joints shall be sealed and insulated access doors shall be provided and gasketed to prevent air leakage. Panel construction shall be not less than 20 gauge galvanized sheet steel and shall be assembled with

fasteners treated against corrosion. Standard length panels shall deflect not more than 1/2 inch under operation. Details of construction, including joint sealing, not specifically covered shall be as indicated in SMACNA HVAC Duct Const Stds. The plenums and casings shall be constructed to withstand the specified internal pressure of the air systems.

2.8.5.5 Not Used

2.8.6 Not Used

2.8.7 Diffusers, Registers, and Grilles

Units shall be factory-fabricated of steel, corrosion-resistant steel, or aluminum and shall distribute the specified quantity of air evenly over space intended without causing noticeable drafts, air movement faster than 50 fpm in occupied zone, or dead spots anywhere in the conditioned area. Outlets for diffusion, spread, throw, and noise level shall be as required for specified performance. Performance shall be certified according to ASHRAE 70. Inlets and outlets shall be sound rated and certified according to ASHRAE 70. Sound power level shall be as indicated. Diffusers and registers shall be provided with volume damper with accessible operator, unless otherwise indicated; or if standard with the manufacturer, an automatically controlled device will be acceptable. Volume dampers shall be opposed blade type for all diffusers and registers, except linear slot diffusers. Linear slot diffusers shall be provided with round or elliptical balancing dampers. Where the inlet and outlet openings are located less than 7 feet above the floor, they shall be protected by a grille or screen according to NFPA 90A.

2.8.7.1 Diffusers

Diffuser types shall be as indicated. Ceiling mounted units shall be furnished with anti-smudge devices, unless the diffuser unit minimizes ceiling smudging through design features. Diffusers shall be provided with air deflectors of the type indicated. Air handling troffers or combination light and ceiling diffusers shall conform to the requirements of UL Elec Const Dir for the interchangeable use as cooled or heated air supply diffusers or return air units. Ceiling mounted units shall be installed with rims tight against ceiling. Sponge rubber gaskets shall be provided between ceiling and surface mounted diffusers for air leakage control. Suitable trim shall be provided for flush mounted diffusers. Duct collar connecting the duct to diffuser shall be airtight and shall not interfere with volume controller. Return or exhaust units shall be similar to supply diffusers.

2.8.7.2 Registers and Grilles

Units shall be four-way directional-control type, except that return and exhaust registers may be fixed horizontal or vertical louver type similar in appearance to the supply register face. Registers shall be provided with sponge-rubber gasket between flanges and wall or ceiling. Wall supply registers shall be installed at least 6 inches below the ceiling unless otherwise indicated. Return and exhaust registers shall be located 6 inches above the floor unless otherwise indicated. Four-way directional control may be achieved by a grille face which can be rotated in 4 positions or by adjustment of horizontal and vertical vanes. Grilles shall be as specified for registers, without volume control damper.

2.8.8 Not Used

2.8.9 Not Used

2.8.10 Bird Screens and Frames

Bird screens shall conform to ASTM E 437, Type I, Class 1, 2 by 2 mesh, 0.063 inch diameter aluminum wire or 0.031 inch diameter stainless steel wire. Frames shall be removable type or stainless steel or extruded aluminum.

2.8.11 Not Used

2.9 AIR SYSTEMS EQUIPMENT

2.9.1 Fans

Fans shall be tested and rated according to AMCA ANSI/AMCA 210. Fans may be connected to the motors either directly or indirectly with V-belt drive. V-belt drives shall be designed for not less than 150percent of the connected driving capacity. Motor sheaves shall be variable pitch for 15 hp and below and fixed pitch as defined by ARI Guideline D. Variable pitch sheaves shall be selected to drive the fan at a speed which will produce the specified capacity when set at the approximate midpoint of the sheave adjustment. When fixed pitch sheaves are furnished, a replaceable sheave shall be provided when needed to achieve system air balance. Motors for V-belt drives shall be provided with adjustable rails or bases. Removable metal guards shall be provided for all exposed V-belt drives, and speed-test openings shall be provided at the center of all rotating shafts. Fans shall be provided with personnel screens or guards on both suction and supply ends, except that the screens need not be provided, unless otherwise indicated, where ducts are connected to the fan. Fan and motor assemblies shall be provided with vibration-isolation supports or mountings as indicated. Vibration-isolation units shall be standard products with published loading ratings. Each fan shall be selected to produce the capacity required at the fan static pressure indicated. Sound power level shall be as indicated. The sound power level values shall be obtained according to AMCA Std 300. Standard AMCA arrangement, rotation, and discharge shall be as indicated.

2.9.1.1 Centrifugal Fans

Centrifugal fans shall be fully enclosed, single-width single-inlet, or double-width double-inlet, AMCA Pressure Class I, II, or III as required or indicated for the design system pressure. Impeller wheels shall be rigidly constructed, accurately balanced both statically and dynamically. Fan blades may be forward curved, backward-inclined or airfoil design in wheel sizes up to 30 inches. Fan blades for wheels over 30 inches in diameter shall be backward-inclined or airfoil design These fans shall be suitable for conveying lint and the temperatures encountered. The fan shaft shall be provided with a heat slinger to dissipate heat buildup along the shaft. An access (service) door to facilitate maintenance shall be supplied with these fans. Fan wheels over 36 inches in diameter shall have overhung pulleys and a bearing on each side of the wheel. Fan wheels 36 inches or less in diameter may have one or more extra long bearings between the fan wheel and the drive. Bearings shall be sleeve type, self-aligning and self-oiling with oil reservoirs, or precision self-aligning roller or ball-type with accessible grease fittings or permanently lubricated type.

Grease fittings shall be connected to tubing and serviceable from a single accessible point. Bearing life shall be L50 rated at not less than 200,000 hours as defined by AFBMA ANSI B3.15/AFBMA Std 9 and AFBMA ANSI B3.16/AFBMA Std 11. Fan shafts shall be steel, accurately finished, and shall be provided with key seats and keys for impeller hubs and fan pulleys. Each fan outlet shall be of ample proportions and shall be designed for the attachment of angles and bolts for attaching flexible connections. Motors, unless otherwise indicated, shall not exceed 1800 rpm and shall have totally enclosed enclosures. Motor starters shall be reduced-voltage-start type with general-purpose enclosure.

2.9.1.2 Not Used

2.9.1.3 Not Used

2.9.1.4 Not used

2.9.1.5 Not Used

2.9.1.6 Centrifugal Type Power Roof Ventilators

Fans shall be direct or V-belt driven with backward inclined, non-overloading wheel. Motor compartment housing shall be hinged or removable and weatherproof, constructed of heavy gauge aluminum. Fans shall be provided with birdscreen, disconnect switch, low-leakage motorized dampers, roof curb, extended base. Motors enclosure shall be dripproof type.

2.9.1.7 Not Used

2.9.1.8 Not Used

2.9.1.9 Not Used

2.9.2 Not Used

2.9.2.1 Not Used

2.9.2.2 Not Used

2.9.3 Air Filters

Air filters shall be listed according to requirements of UL 900, except high efficiency particulate air filters of 99.97 percent efficiency by the DOP Test method shall be as listed under the Label Service and shall meet the requirements of UL 586.

2.9.3.1 Extended Surface Pleated Panel Filters

Filters shall be 1 inch depth, sectional, disposable type of the size

indicated and shall have an average efficiency of 25 to 30 percent when tested according to ASHRAE 52.1. Initial resistance at 500 feet per minute shall not exceed 0.36 inches water gauge. Filters shall be UL Class 2. Media shall be nonwoven cotton and synthetic fiber mat. A wire support grid bonded to the media shall be attached to a moisture resistant fiberboard frame. All four edges of the filter media shall be bonded to the inside of the frame to prevent air bypass and increase rigidity.

2.9.3.2 Not Used

2.9.3.3 Not Used

2.9.3.4 Not Used

2.9.3.5 Not Used

2.9.3.6 Not Used

2.9.3.7 Not Used

2.9.3.8 Not Used

2.9.3.9 Not Used

2.9.3.10 Not Used

2.10 Not Used

2.11 Not Used

2.12 Not Used

2.13 Not Used

PART 3 EXECUTION

3.1 INSTALLATION

Work shall be installed as shown and according to the manufacturer's diagrams and recommendations.

3.1.1 Not Used

3.1.1.1 Not Used
3.1.2 Not Used
3.1.2.1 Not Used
3.1.2.2 Not Used
3.1.3 Not Used

3.1.4 Not Used

3.1.4.1 Not Used

3.1.4.2 Not Used

3.1.4.3 Not Used

3.1.5 Not Used

3.1.6 Not Used

3.1.7 Not Used
3.1.8 Not Used

3.1.9 Not Used

3.1.10 Access Panels

Access panels shall be provided for concealed valves, vents, controls, dampers, and items requiring inspection or maintenance. Access panels shall be of sufficient size and located so that the concealed items may be serviced and maintained or completely removed and replaced. Access panels shall be as specified in Section 05500 MISCELLANEOUS METALS.

3.1.11 Flexible Connectors

Pre-insulated flexible connectors and flexible duct shall be attached to other components in accordance with the latest printed instructions of the manufacturer to ensure a vapor tight joint. Hangers, when required to suspend the connectors, shall be of the type recommended by the connector or duct manufacturer and shall be provided at the intervals recommended.

3.1.12 Sleeved and Framed Openings

Space between the sleeved or framed opening and the duct or the duct insulation shall be packed as specified in Section 07840 FIRESTOPPING for fire rated penetrations. For non-fire rated penetrations, the space shall be packed as specified in Section 07900 JOINT SEALING.

3.1.13 Metal Ductwork

Installation shall be according to SMACNA HVAC Duct Const Stds unless otherwise indicated. Duct supports for sheet metal ductwork shall be according to SMACNA HVAC Duct Const Stds, unless otherwise specified. Friction beam clamps indicated in SMACNA HVAC Duct Const Stds shall not be used. Risers on high velocity ducts shall be anchored in the center of the vertical run to allow ends of riser to move due to thermal expansion. Supports on the risers shall allow free vertical movement of the duct. Supports shall be attached only to structural framing members and concrete slabs. Supports shall not be anchored to metal decking unless a means is provided and approved for preventing the anchor from puncturing the metal decking. Where supports are required between structural framing members, suitable intermediate metal framing shall be provided. Where C-clamps are used, retainer clips shall be provided. Duct sizes may be changed to equivalent sizes per SMACNA or ASHRAE equivalency tables.

3.1.14 Not Used

3.1.15 Not Used

3.1.16 Not Used

3.1.17 Not Used

3.1.18 Dust Control

To prevent the accumulation of dust, debris and foreign material during construction, temporary dust control protection shall be provided. The distribution system (supply and return) shall be protected with temporary seal-offs at all inlets and outlets at the end of each day's work. Temporary protection shall remain in place until system is ready for startup.

3.1.19 Insulation

Thickness and application of insulation materials for ductwork, piping, and equipment shall be according to Section 15080 THERMAL INSULATION FOR MECHANICAL SYSTEMS. Outdoor air intake ducts and plenums shall be externally insulated up to the point where the outdoor air reaches the air handling unit.

3.1.20 Duct Test Holes

Holes with closures or threaded holes with plugs shall be provided in ducts and plenums as indicated or where necessary for the use of pitot tube in balancing the air system. Extensions, complete with cap or plug, shall be provided where the ducts are insulated.

3.1.21 Not Used

3.1.22 Power Transmission Components Adjustment

V-belts and sheaves shall be tested for proper alignment and tension prior to operation and after 72 hours of operation at final speed. Belts on drive side shall be uniformly loaded, not bouncing. Alignment of direct driven couplings shall be to within 50 percent of manufacturer's maximum allowable range of misalignment.

3.2 Not Used

3.3 Not Used

3.4 DUCTWORK LEAK TEST

Ductwork leak test shall be performed for the entire air distribution and exhaust system, including fans, coils, filters, etc. Test procedure, apparatus, and report shall conform to SMACNA Leakage Test Mnl. The maximum allowable leakage rate is 5% of maximum design airflow for each air handling unit at the expected operating pressure. Ductwork leak test shall be completed with satisfactory results prior to applying insulation to ductwork exterior.

3.5 CLEANING AND ADJUSTING

Pipes shall be cleaned free of scale and thoroughly flushed of foreign matter. A temporary bypass shall be provided for water coils to prevent flushing water from passing through coils. Strainers and valves shall be thoroughly cleaned. Prior to testing and balancing, air shall be removed from water systems by operating the air vents. Temporary measures, such as piping the overflow from vents to a collecting vessel shall be taken to

avoid water damage during the venting process. Air vents shall be plugged or capped after the system has been vented. Inside of room fan-coil units ducts, plenums, and casing shall be thoroughly cleaned of debris and blown free of small particles of rubbish and dust and then shall be vacuum cleaned before installing outlet faces. Equipment shall be wiped clean, with traces of oil, dust, dirt, or paint spots removed. Temporary filters shall be provided prior to startup of all fans that are operated during construction, and new filters shall be installed after all construction dirt has been removed from the building, and the ducts, plenums, casings, and other items specified have been vacuum cleaned. System shall be maintained in this clean condition until final acceptance. Bearings shall be properly lubricated with oil or grease as recommended by the manufacturer. Belts shall be tightened to proper tension. Control valves and other miscellaneous equipment requiring adjustment shall be adjusted to setting indicated or directed. Fans shall be adjusted to the speed indicated by the manufacturer to meet specified conditions.

3.6 TESTING, ADJUSTING, AND BALANCING

Testing, adjusting, and balancing shall be as specified in Section y15990 TESTING, ADJUSTING AND BALANCING OF HVAC SYSTEMS. Testing, adjusting, and balancing shall begin only when the air supply and distribution, including controls, has been completed, with the exception of performance tests.

3.7 PERFORMANCE TESTS

After testing, adjusting, and balancing has been completed as specified, each system shall be tested as a whole to see that all items perform as integral parts of the system and temperatures and conditions are evenly controlled throughout the building. Corrections and adjustments shall be made as necessary to produce the conditions indicated or specified. Capacity tests and general operating tests shall be conducted by an experienced engineer. Tests shall cover a period of not less than 5 days for each system and shall demonstrate that the entire system is functioning according to the specifications. Coincidental chart recordings shall be made at points indicated on the drawings for the duration of the time period and shall record the temperature at space thermostats or space sensors, the humidity at space humidistats or space sensors and the ambient temperature and humidity in a shaded and weather protected area.

3.8 FIELD TRAINING

The Contractor shall conduct a training course for operating and maintenance personnel as designated by the Contracting Officer. Training shall be provided for a period of 40 hours of normal working time and shall start after the system is functionally complete but prior to the performance tests. The field instruction shall cover all of the items contained in the approved Operating and Maintenance Instructions.

-- End of Section --

This page was intentionally left blank for duplex printing.

SECTION TABLE OF CONTENTS

DIVISION 15 - MECHANICAL

SECTION 15950

HVAC SEQUENCE OF OPERATION

8/99

PART 1 GENERAL

1.1 GENERAL

PART 2 PRODUCTS

2.1 PRODUCTS

PART 3 EXECUTION

3.1 HVAC CONTROL SEQUENCES
3.1.1 Packaged Terminal Air Conditioner (PTAC) Control Sequence
3.1.2 Exhaust Fan Ef-2.3

-- End of Section Table of Contents --

SECTION 15950

HVAC SEQUENCE OF OPERATION
8/99

PART 1 GENERAL

1.1 GENERAL

Control Sequence: Manner and chronological sequence in which, and methods by which, automatic temperature controls shall function.

A specified temperature followed by (FA) shall mean this setpoint temperature can be adjusted (re-set) manually through the Building Automation System (BAS) to another setpoint temperature if so desired by Government.

PART 2 PRODUCTS

2.1 PRODUCTS

See drawings and applicable specifications.

PART 3 EXECUTION

3.1 HVAC CONTROL SEQUENCES

3.1.1 Packaged Terminal Air Conditioner (PTAC) Control Sequence

a. Units shall be controlled by programmable thermostatwith temperature setback/set-up over a seven day period.

b. PTAC units shall have setback/set-up strategy which shall be initiated by a front-desk central "check-in" control system as part of the (BAS), that allows 24-hour setback/set-up control for vacant rooms. The system will setback the PTAC's such that cooling operations are locked out and a minimum heating setback temperature of 60 deg. F (FA) is maintained in unoccupied rooms. Wire thermostats to existing BAS.

3.1.2 Exhaust Fan Ef-2.3

Exhaust fan, single speed, interlocked with room thermostat.

Exhaust fan controlled by "HAND-OFF-AUTO" selector switch.

When switch in "HAND" position, fan shall run continuously.

When switch in "OFF" position, fan shall be off.

When switch in "AUTO" position, fan shall be controlled by the BAS.

Space thermostat shall modulate motor operated outdoor air damper and exhaust fan motor operated damper open and shall start exhaust fan to

maintain space set point temperature. Prove dampers open position with end switch prior to start of exhaust fan.

When space thermostat is satisfied fan shall stop and outdoor air damper shall fully close.

When outside air temperature is below 55 degrees F (FA) exhaust fan shall be off.

When the fire alarm is activted; the fan shall be off.

END OF SECTION -- End of Section --

This page was intentionally left blank for duplex printing.

SECTION TABLE OF CONTENTS

DIVISION 15 - MECHANICAL

SECTION 15951

DIRECT DIGITAL CONTROL FOR HVAC

06/98

PART 1 GENERAL

1.1 REFERENCES
1.2 GENERAL REQUIREMENTS
1.2.1 Nameplates, Lens Caps, and Tags
1.2.2 Verification of Dimensions
1.2.3 Drawings
1.2.4 Power-Line Surge Protection
1.2.5 Surge Protection for Transmitter and Control Wiring
1.2.6 System Overall Reliability Requirement
1.2.7 DDC System Network Accessibility
1.2.8 System Accuracy and Display
1.2.8.1 Space Temperature
1.2.8.2 Duct Temperature
1.2.8.3 Outside Air Temperature
1.2.8.4 Water Temperature
1.2.8.5 High Temperature
1.2.8.6 Relative Humidity
1.2.8.7 Pressure
1.2.8.8 Flow
1.2.8.9 KWh and kW Demand
1.2.8.10 Analog Value Input
1.3 SUBMITTALS
1.4 DELIVERY AND STORAGE
1.5 OPERATION MANUAL
1.6 MAINTENANCE AND REPAIR MANUAL
1.7 MAINTENANCE AND SERVICE
1.7.1 Description of Work
1.7.2 Personnel
1.7.3 Scheduled Inspections
1.7.4 Scheduled Work
1.7.5 Emergency Service
1.7.6 Operation
1.7.7 Records and Logs
1.7.8 Work Requests
1.7.9 System Modifications
1.7.10 Software
1.8 FACTORY TESTING
1.8.1 Factory Test Setup

PART 2 PRODUCTS

2.1 GENERAL EQUIPMENT REQUIREMENTS
2.1.1 Electrical and Electronic Devices
2.1.2 Standard Signals
2.1.3 Ambient Temperature Limits

2.1.4 Year 2000 Compliance
2.1.5 Software
2.2 Not Used
2.3 WIRING
2.3.1 Terminal Blocks
2.3.2 Control Wiring for 24-Volt Circuits
2.3.3 Wiring for 120-Volt Circuits
2.3.4 Instrumentation Cable
2.3.5 Transformers
2.4 ACTUATORS
2.5 DAMPERS
2.5.1 Damper Assembly
2.5.2 Operating Links
2.5.3 Damper Types
2.5.3.1 Outside Air, Return Air, and Relief Air Dampers
2.5.3.2 Mechanical and Electrical Space Ventilation Dampers
2.5.3.3 Fire/Smoke Dampers
2.6 Not Used
2.7 INSTRUMENTATION
2.7.1 Measurements
2.8 Modulating Room Thermostats
2.9 Not Used
2.10 Not Used
2.11 Not Used
2.11.1 Not Used
2.11.2 Not Used
2.11.3 Not Used
2.12 CONTROL DEVICES AND ACCESSORIES
2.12.1 Relays
2.12.2 Current Sensing Relays
2.13 Not Used
2.14 DIRECT DIGITAL CONTROL (DDC) HARDWARE
2.14.1 Network Control Panel
2.14.1.1 Integral Features
2.14.1.2 Communication Interfaces
2.14.1.3 Memory and Real Time Clock (RTC) Backup
2.14.1.4 Duplex Outlet
2.14.1.5 Locking Enclosures
2.14.1.6 Failure Mode
2.14.2 RIU
2.14.2.1 Integral Features
2.14.2.2 Duplex Outlet
2.14.2.3 Locking Enclosures
2.14.2.4 Failure Mode
2.14.3 Universal Programmable Controller (UPC)
2.14.3.1 Integral Features
2.14.3.2 Communication Interfaces
2.14.3.3 Memory and RTC Backup
2.14.3.4 Specific Requirements
2.14.3.5 Locking Enclosures
2.14.3.6 Failure Mode
2.14.4 Unitary Controller
2.14.4.1 Integral Features
2.14.4.2 Communication Interfaces
2.14.4.3 Specific Requirements
2.14.4.4 Failure Mode
2.14.5 Not Used
2.14.6 I/O Functions
2.14.6.1 DDC Hardware I/O Functions

2.14.6.2 Failure Mode
2.14.7 Data Terminal Cabinet (DTC)
2.15 DDC SOFTWARE
2.15.1 Operating System
2.15.1.1 Startup
2.15.1.2 Operating Mode
2.15.1.3 Failure Mode
2.15.2 Functions
2.15.2.1 Analog Monitoring
2.15.2.2 Logic (Virtual) Points
2.15.2.3 State Variables
2.15.2.4 Analog Totalization
2.15.2.5 Energy Totalization
2.15.2.6 Trending
2.15.3 I/O Point Database/Parameter Definition
2.15.4 Alarm Processing
2.15.4.1 Digital Alarms Definition
2.15.4.2 Analog Alarms Definition
2.15.4.3 Pulse Accumulator Alarms Definition
2.15.5 Constraints
2.15.5.1 Equipment Constraints Definitions
2.15.5.2 Constraints Checks
2.15.6 Diagnostics
2.15.7 Summer-Winter Operation Monitoring
2.15.8 Control Sequences and Control Loops
2.15.9 Command Priorities
2.15.10 Resident Application Software
2.15.10.1 Program Inputs and Outputs
2.15.10.2 DDC General Conditions
2.15.10.3 Scheduled Start/Stop Program
2.15.10.4 Optimum Start/Stop Program
2.15.10.5 Day-Night Setback Program
2.15.10.6 Not Used
2.15.10.7
2.15.10.8 Not Used
2.15.10.9 Not Used
2.15.10.10 Not Used
2.15.10.11 Not used
2.15.10.12 Not Used
2.15.10.13 Not Used
2.15.10.14 Not Used
2.15.10.15 Not Used
2.15.10.16 Not Used
2.15.10.17 Not Used
2.15.10.18 Not Used.
2.15.10.19 Not Used
2.15.10.20 Not Used
2.15.10.21 Not Used.
2.15.10.22 Not Used
2.15.10.23 Not Used

PART 3 EXECUTION

3.1 GENERAL INSTALLATION CRITERIA
3.1.1 HVAC Control System
3.1.2 Software Installation
3.1.3 Device Mounting Criteria
3.1.4 Wiring Criteria
3.2 CONTROL SYSTEM INSTALLATION

3.2.1 Not Used
3.2.2 Not Used
3.2.3 Room Instrument Mounting
3.2.4 Not Used
3.2.5 Not Used
3.2.6 Not Used
3.2.7 Not Used
3.2.8 Not Used
3.2.9 Not Used
3.2.10 Not Used
3.2.10.1 Not Used
3.3 CONTROL SEQUENCES OF OPERATION
3.3.1 General Requirements - HVAC Systems
3.3.1.1 Not Used
3.3.2 Not Used
3.3.3 Unit Heater and Cabinet Unit Heater
3.3.4 Not Used
3.3.5 All-Air Small Package Unitary System
3.3.6 Not Used
3.3.7 Not Used
3.3.8 Not Used.
3.3.8.1 Not Used
3.3.8.2 Not Used
3.3.8.3 Not Used
3.3.9 Not Used
3.3.10 Not Used
3.3.11 Not Used
3.3.12 Not Used
3.3.13 Not Used
3.3.14 Not Used
3.3.15 Not Used
3.3.16 Not Used
3.3.17 Not Used
3.3.18 Not Used
3.3.18.1 Not Used
3.3.18.2 Not Used
3.3.18.3 Not Used
3.3.18.4 Not Used
3.3.18.5 Not Used
3.3.18.6 Not Used
3.3.18.7 Not Used
3.3.18.8
3.3.18.9 NotUsed
3.3.18.10 Not Used.
3.3.18.11 Not Used
3.3.18.12 Not Used
3.3.19 Not Used
3.3.20 Not Used
3.3.21 Not Used
3.3.22 Not Used
3.4 COMMISSIONING PROCEDURES
3.4.1 Evaluations
3.4.1.1 Item Check
3.4.1.2 Weather Dependent Test Procedures
3.4.2 Not Used
3.4.3 Unit Heater and Cabinet Unit Heater
3.4.4 Not Used
3.4.5 All-Air Small Packaged Unitary
3.4.6 Not Used

3.4.7 Not Used
3.4.8 Not Used.
3.4.9 Not Used
3.4.10 Not Used
3.4.11 Not Used
3.4.12 Not Used
3.4.13 Not Used
3.4.14 Not Used
3.4.15 Not Used
3.4.16 Not Used
3.4.17 Not Used
3.4.18 Not Used
3.4.19 Not Used
3.4.20 Not Used
3.4.21 Not Used
3.4.22 Not Used
3.5 BALANCING, COMMISSIONING, AND TESTING
3.5.1 Coordination with HVAC System Balancing
3.5.2 Control System Calibration, Adjustments, and Commissioning
3.5.3 Performance Verification Test
3.5.4 Endurance Test
3.5.5 Posted and Panel Instructions
3.6 TRAINING
3.6.1 Training Course Requirements
3.6.2 Training Course Content

-- End of Section Table of Contents --

SECTION 15951

DIRECT DIGITAL CONTROL FOR HVAC
06/98

PART 1 GENERAL

1.1 REFERENCES

The publications listed below form a part of this specification to the extent referenced. The publications are referred to in the text by basic designation only.

AIR MOVEMENT AND CONTROL ASSOCIATION (AMCA)

AMCA 500	(1994) Test Methods for Louvers, Dampers and Shutters

INSTITUTE OF ELECTRICAL AND ELECTRONICS ENGINEERS (IEEE)

IEEE C62.41	(1991; R 1995) Surge Voltages in Low-Voltage AC Power Circuits
IEEE Std 142	(1991) IEEE Recommended Practice for Grounding of Industrial and Commercial Power Systems

NATIONAL ELECTRICAL MANUFACTURERS ASSOCIATION (NEMA)

NEMA 250	(1991) Enclosures for Electrical Equipment (1000 Volts Maximum)
NEMA ICS 1	(1993) Industrial Control and Systems
NEMA ST 1	(1988) Specialty Transformers (Exept General-Purpose Type)

NATIONAL FIRE PROTECTION ASSOCIATION (NFPA)

NFPA 70	(1996; Errata 96-4) National Electrical Code
NFPA 90A	(1996) Installation of Air Conditioning and Ventilating Systems

UNDERWRITERS LABORATORIES (UL)

UL 508	(1993; Rev thru Oct 1997) Industrial Control Equipment
UL 555S	(1996) Leakage Rated Dampers for Use in Smoke Control Systems

1.2 GENERAL REQUIREMENTS

The direct digital control (DDC) shall be a complete system suitable for the heating, ventilating and air-conditioning (HVAC) system.

1.2.1 Nameplates, Lens Caps, and Tags

Nameplates and lens caps bearing legends as shown and tags bearing device-unique identifiers as shown shall have engraved or stamped characters. A plastic or metal tag shall be mechanically attached directly to each device or attached by a metal chain or wire. Each airflow measurement station shall have a tag showing flow rate range for signal output range, duct size, and identifier as shown.

1.2.2 Verification of Dimensions

After becoming familiar with all details of the work, the Contractor shall verify all dimensions in the field, and shall advise the Contracting Officer of any discrepancy before performing any work.

1.2.3 Drawings

Because of the small scale of the drawings, it is not possible to indicate all offsets, fittings, and accessories that may be required. The Contractor shall carefully investigate the mechanical, electrical, and finish conditions that could affect the work to be performed, shall arrange such work accordingly, and shall furnish all work necessary to meet such conditions.

1.2.4 Power-Line Surge Protection

Equipment connected to ac circuits shall be protected from power-line surges. Equipment protection shall meet the requirements of IEEE C62.41. Fuses shall not be used for surge protection.

1.2.5 Surge Protection for Transmitter and Control Wiring

DDC system control-panel equipment shall be protected against surges induced on control and transmitter wiring installed outside and as shown. The equipment protection shall be tested in the normal mode and in the common mode, using the following two waveforms:

a. A 10-microsecond by 1,000-microsecond waveform with a peak voltage of 1,500 volts and a peak current of 60 amperes.

b. An eight microsecond by 20-microsecond waveform with a peak voltage of 1,000 volts and a peak current of 500 amperes.

1.2.6 System Overall Reliability Requirement

The system shall be configured and installed to yield a mean time between failure (MTBF) of at least 40,000 hours. Each DDC controller shall be designed, configured, installed and programmed to provide for stand alone operation with minimal performance degradation on failure of other system components to which it is connected or with which it communicates.

1.2.7 DDC System Network Accessibility

Where the systems to be controlled by the DDC system are located in multiple mechanical rooms, each mechanical room shall have at least one communication port for the portable workstation/tester. DDC controllers

shall be located in the same room as the equipment being controlled or in an adjacent space which has direct access to the equipment room.

1.2.8 System Accuracy and Display

The system shall maintain an end-to-end accuracy for one year from sensor to operator's console display for the applications specified and shall display the value as specified. Each temperature shall be displayed and printed to nearest 0.1 degree F.

1.2.8.1 Space Temperature

Space temperature with a range of 50 to 85 degrees F plus or minus 0.75 degree F for conditioned space; 30 to 130 degrees F plus or minus 1 degree F for unconditioned space.

1.2.8.2 Duct Temperature

Duct temperature with a range of 40 to 140 degrees F plus or minus 2 degrees F.

1.2.8.3 Outside Air Temperature

Outside air (OA) temperature with a range of minus 30 to plus 130 degrees F plus or minus 2 degrees F; with a subrange of 30 to 100 degrees F plus or minus 1 degree F.

1.2.8.4 Water Temperature

Water temperature with a range of 30 to 100 degrees F plus or minus 0.75 degree F; the range of 100 to 250 degrees F plus or minus 2 degrees F; and water temperatures for the purpose of performing Btu calculations using differential temperatures to plus or minus 0.5 degree F using matched sensors.

1.2.8.5 High Temperature

High temperature with a range of 200 to 500 degrees F plus or minus 2.0 degrees F.

1.2.8.6 Relative Humidity

Relative humidity, within a range of 20 to 80 percent, plus or minus 6.0 percent of range (display and print to nearest 1.0 percent).

1.2.8.7 Pressure

Pressure with a range for the specific application plus or minus 2.0 percent of range (display and print to nearest psi.)

1.2.8.8 Flow

Flow with a range for the specific application plus or minus 3.0 percent of range, and flows for the purpose of thermal calculations to plus or minus 2.0 percent of actual flow (display and print to nearest unit, such as gallons per minute).

1.2.8.9 KWh and kW Demand

KWh and kW demand with a range for the specific application plus or minus 1.0 percent of reading (display and print to nearest kWh or kW).

1.2.8.10 Analog Value Input

An analog value input to the system's equipment via an AI with a maximum error of 0.50 percent of range, not including the sensor or transmitter error. This accuracy shall be maintained over the specified environmental conditions.

1.3 SUBMITTALS

Government approval is required for submittals with a "GA" designation; submittals having an "FIO" designation are for information only. The following shall be submitted in accordance with Section 01330 SUBMITTAL PROCEDURES:

SD-02 Shop Drawings

HVAC Control System; G-AE.

Drawings shall be on 34 by 22 inch sheets in the form and arrangement shown. The drawings shall use the same abbreviations, symbols, nomenclature and identifiers shown. Each control system element on a drawing shall have a unique identifier as shown. The HVAC Control System Drawings shall be delivered together as a complete submittal. Deviations must be approved by the Contracting Officer. Drawings shall be submitted along with Submittal SD-01, Data.

a. HVAC Control System Drawings shall include the following:

Sheet One: Drawing Index, HVAC Control System Legend.
Sheet Two: Valve Schedule, Damper Schedule.

Sheet Three: Control System Schematic and Equipment Schedule.
Sheet Four: Sequence of Operation and Data Terminal Strip Layout.
Sheet Five: Control Loop Wiring Diagrams.
Sheet Six: Motor Starter and Relay Wiring Diagram.
Sheet Seven: Communication Network and Block Diagram.
Sheet Eight: DDC Panel Installation and Block Diagram.

(Repeat Sheets Three through Eight for each AHU System.)

b. The HVAC Control System Drawing Index shall show the name and number of the building, military site, State or other similar designation, and Country. The Drawing Index shall list HVAC Control System Drawings, including the drawing number, sheet number, drawing title, and computer filename when used. The HVAC Control System Legend shall show generic symbols and the name of devices shown on the HVAC Control System Drawings.

c. The valve schedule shall include each valve's unique identifier, size, flow coefficient Cv, pressure drop at specified flow rate, spring range, positive positioner range, actuator size, close-off pressure data, dimensions, and access and clearance requirements data. Valve schedules may be submitted in advance but shall be included in the complete submittal.

d. The damper schedule shall contain each damper's and each actuator's identifier, nominal and actual sizes, orientation of axis and frame, direction of blade rotation, spring ranges, operation rate, positive positioner ranges, locations of actuators and damper end switches, arrangement of sections in multi-section dampers, and methods of connecting dampers, actuators, and linkages. The Damper Schedule shall include the maximum leakage rate at the operating static-pressure differential. The Damper Schedule shall contain actuator selection data supported by calculations of the torque required to move and seal the dampers, access and clearance requirements. Damper schedules may be submitted in advance but shall be included in the complete submittal.

e. The HVAC control system schematics shall be in the form shown, and shall show all control and mechanical devices associated with the HVAC system. A system schematic drawing shall be submitted for each HVAC system.

f. The HVAC control system equipment Schedule shall be in the form shown. All devices shown on the drawings having unique identifiers shall be referenced in the equipment schedule. Information to be included in the equipment schedule shall be the control loop, device unique identifier, device function, setpoint, input range, and additional important parameters (i.e., output range). An equipment schedule shall be submitted for each HVAC system.

g. The HVAC control system sequence of operation shall reflect the language and format of this specification, and shall refer to the devices by their unique identifiers as shown. No operational deviations from specified sequences will be permitted without prior written approval of the Contracting Officer. Sequences of operation shall be submitted for each HVAC control system including each type of terminal unit control system.

h. The HVAC control system wiring diagrams shall be functional wiring diagrams which show the interconnection of conductors and cables to HVAC control panel terminal blocks and to the identified terminals of devices, starters and package equipment. The wiring diagrams shall show necessary jumpers and ground connections. The wiring diagrams shall show the labels of all conductors. Sources of power required for HVAC control systems and for packaged equipment control systems shall be identified back to the panel board circuit breaker number, HVAC system control panel, magnetic starter, or packaged equipment control circuit. Each power supply and transformer not integral to a controller, starter, or packaged equipment shall be shown. The connected volt-ampere load and the power supply volt-ampere rating shall be shown. Wiring diagrams shall be submitted for each HVAC control system.

SD-03 Product Data

Equipment Compliance Booklet; G-AE.

The HVAC Control System Equipment Compliance Booklet (ECB) shall be in booklet form and indexed, with numbered tabs separating the information on each device. It shall consist of, but not be

limited to, data sheets and catalog cuts which document compliance of all devices and components with the specifications. The ECB shall be indexed in alphabetical order by the unique identifiers. Devices and components which do not have unique identifiers shall follow the devices and components with unique identifiers and shall be indexed in alphabetical order according to their functional name. The ECB shall include a Bill of Materials for each HVAC Control System. The Bill of Materials shall function as the Table of Contents for the ECB and shall include the device's unique identifier, device function, manufacturer, model/part/catalog number used for ordering, and tab number where the device information is located in the ECB. The ECB shall be submitted along with Submittal SD-04, Drawings.

Commissioning Procedures; .

Six copies of the HVAC control system commissioning procedures, in booklet form and indexed, 60 days prior to the scheduled start of commissioning. Commissioning procedures shall be provided for each HVAC control system, and for each type of terminal unit control system. The Commissioning procedures shall reflect the format and language of this specification, and refer to devices by their unique identifiers as shown. The Commissioning procedures shall be specific for each HVAC system, and shall give detailed step-by-step procedures for commissioning of the system.

a. The Commissioning procedures shall include detailed, product specific set-up procedures, configuration procedures, adjustment procedures, and calibration procedures for each device. Where the detailed product specific commissioning procedures are included in manufacturer supplied manuals, reference may be made in the HVAC control system commissioning procedures to the manuals.

b. An HVAC control system commissioning procedures equipment list shall be included that lists the equipment to be used to accomplish commissioning. The list shall include manufacturer name, model number, equipment function, the date of the latest calibration, and the results of the latest calibration.

Performance Verification Test Procedures; .

Six copies of the HVAC Control System Performance Verification Test Procedures, in booklet form and indexed, 60 days before the Contractor's scheduled test dates. The performance verification test procedures shall refer to the devices by their unique identifiers as shown, shall explain, step-by-step, the actions and expected results that will demonstrate that the HVAC control system performs in accordance with the sequences of operation, and other contract documents. An HVAC control system performance verification test equipment list shall be included that lists the equipment to be used during performance verification testing. The list shall include manufacturer name, model number, equipment function, the date of the latest calibration, and the results of the latest calibration.

Training Course Materials; G-AE.

An outline for the HVAC control system training course with a proposed time schedule. Approval of the planned training schedule

shall be obtained from the Government at least 60 days prior to the start of the training. Six copies of HVAC control system training course material 30 days prior to the scheduled start of the training course. The training course material shall include the operation manual, maintenance and repair manual, and paper copies of overheads used in the course.

Service Organizations; .

Six copies of a list of service organizations qualified to service the HVAC control system. The list shall include the service organization name, address, technical point of contact and telephone number, and contractual point of contact and telephone number.

SD-06 Test Reports

Commissioning Report; .

Six copies of the HVAC Control System Commissioning Report, in booklet form and indexed, within 30 days after completion of the system commissioning. The commissioning report shall include data collected during the HVAC control system commissioning procedures and shall follow the format of the commissioning procedures. The commissioning report shall include all configuration checksheets with final values listed for all parameters, setpoints, P, I, D setting constants, calibration data for all devices, results of adjustments, and results of testing.

Performance Verification Test Report; .

Six copies of the HVAC Control System Performance Verification Test Report, in booklet form and indexed, within 30 days after completion of the test. The HVAC control system performance verification test report shall include data collected during the HVAC control system performance verification test. The original copies of all data gathered during the performance verification test shall be turned over to the Government after Government approval of the test results.

SD-10 Operation and Maintenance Manuals

Operation Manual; G-AE.
Maintenance and Repair Manual; G-AE.

Six copies of the HVAC Control System Operation Manualand HVAC Control System Maintenance and Repair Manual, for each HVAC control system, 30 days before the date scheduled for the training course.

1.4 DELIVERY AND STORAGE

Products shall be stored with protection from the weather, humidity and temperature variations, dirt and dust, and other contaminants, within the storage condition limits published by the equipment manufacturer. Dampers shall be stored so that seal integrity, blade alignment and frame alignment are maintained.

1.5 OPERATION MANUAL

An HVAC control system operation manual in indexed booklet form shall be provided for each HVAC control system. The operation manual shall include the HVAC control system sequence of operation, and procedures for the HVAC system start-up, operation and shut-down. The operation manual shall include as-built HVAC control system detail drawings. The operation manual shall include the as-built configuration checksheets, the procedures for changing HVAC control system setpoints, and the procedures for placing HVAC system controllers in the manual control mode.

a. The procedures for changing HVAC control system setpoints shall describe the step-by-step procedures required to change the process variable setpoints, the alarm setpoints, the bias settings, and setpoint reset schedules.

b. The procedures for placing HVAC system controllers in the manual control mode shall describe step-by-step procedures required to obtain manual control of each controlled device and to manually adjust their positions.

1.6 MAINTENANCE AND REPAIR MANUAL

An HVAC control system maintenance and repair manual in indexed booklet form in hardback binders shall be provided for each HVAC control system. The maintenance and repair manual shall include the routine maintenance checklist, a recommended repair methods list, a list of recommended maintenance and repair tools, the qualified service organization list, the as-built commissioning procedures and report, the as-built performance verification test procedures and report, and the as-built equipment data booklet.

a. The routine maintenance checklist shall be arranged in a columnar format. The first column shall list all devices listed in the equipment compliance booklet, the second column shall state the maintenance activity or state no maintenance required, the third column shall state the frequency of the maintenance activity, and the fourth column for additional comments or reference.

b. The recommended repair methods list shall be arranged in a columnar format and shall list all devices in the equipment data compliance booklet and state the guidance on recommended repair methods, either field repair, factory repair, or whole-item replacement.

c. The as-built equipment data booklet shall include the equipment compliance booklet and manufacturer supplied user manuals and information.

d. If the operation manual and the maintenance and repair manual are provided in a common volume, they shall be clearly differentiated and separately indexed.

1.7 MAINTENANCE AND SERVICE

Services, materials and equipment shall be provided as necessary to maintain the entire system in an operational state as specified for a period of one year after successful completion and acceptance of the Performance Verification Test. Impacts on facility operations shall be minimized.

1.7.1 Description of Work

The adjustment and repair of the system shall include the manufacturer's required adjustments of computer equipment, software updates, transmission equipment and instrumentation and control devices.

1.7.2 Personnel

Service personnel shall be qualified to accomplish work promptly and satisfactorily. The Government shall be advised in writing of the name of the designated service representative, and of any changes in personnel.

1.7.3 Scheduled Inspections

Two inspections shall be performed at six-month intervals (or less if required by the manufacturer), and all work required shall be performed. Inspections shall be scheduled in June and December. These inspections shall include:

a. Visual checks and operational tests of equipment.

b. Fan checks and filter changes for control system equipment.

c. Clean control system equipment including interior and exterior surfaces.

d. Check and calibrate each field device. Check and calibrate 50 percent of the total analog points during the first inspection. Check and calibrate the remaining 50 percent of the analog points during the second major inspection. Certify analog test instrumentation accuracy to be twice that of the device being calibrated. Randomly check at least 25 percent of all digital points for proper operation during the first inspection. Randomly check at least 25 percent of the remaining digital points during the second inspection.

e. Run system software diagnostics and correct diagnosed problems.

f. Resolve any previous outstanding problems.

1.7.4 Scheduled Work

This work shall be performed during regular working hours, Monday through Friday, excluding legal holidays.

1.7.5 Emergency Service

The Government will initiate service calls when the system is not functioning properly. Qualified personnel shall be available to provide service to the system. A telephone number where the service supervisor can be reached at all times shall be provided. Service personnel shall be at the site within 24 hours after receiving a request for service. The control system shall be restored to proper operating condition within three calendar days after receiving a request for service.

1.7.6 Operation

Scheduled adjustments and repairs shall include verification of the control system operation as demonstrated by the applicable tests of the performance verification test.

1.7.7 Records and Logs

Dated records and logs shall be kept of each task, with cumulative records for each major component, and for the complete system chronologically. A continuous log shall be maintained for all devices. The log shall contain initial analog span and zero calibration values and digital points. Complete logs shall be kept and shall be available for inspection onsite, demonstrating that planned and systematic adjustments and repairs have been accomplished for the control system.

1.7.8 Work Requests

Each service call request shall be recorded as received and shall include the serial number identifying the component involved, its location, date and time the call was received, nature of trouble, names of the service personnel assigned to the task, instructions describing what has to be done, the amount and nature of the materials to be used, the time and date work started, and the time and date of completion. A record of the work performed shall be submitted within 5 days after work is accomplished.

1.7.9 System Modifications

Recommendations for system modification shall be submitted in writing. No system modifications, including operating parameters and control settings, shall be made without prior approval of the Government. Any modifications made to the system shall be incorporated into the operations and maintenance manuals, and other documentation affected.

1.7.10 Software

Updates to the software shall be provided for system, operating and application software, and operation in the system shall be verified. Updates shall be incorporated into operations and maintenance manuals, and software documentation. There shall be at least one scheduled update near the end of the first year's warranty period, at which time the latest released version of the Contractor's software shall be installed and validated.

1.8 FACTORY TESTING

The Contractor shall assemble the factory test DDC system as specified and shall perform test to demonstrate that the performance of the system satisfies the requirements of this specification. Model numbers of equipment tested shall be identical to those to be delivered to the site. Original copies of data produced, including results of each test procedure during factory testing shall be delivered to the Government at the conclusion of testing, prior to Government approval of the test. The test results documentation shall be arranged so that commands, responses, and data acquired are correlated in a manner which will allow for logical interpretation of the data.

1.8.1 Factory Test Setup

The factory test setup shall include the following:

a. Central workstation/tester.

b. Printer.

c. DDC test set.

d. Portable workstation/tester.

e. Communication links of each type and speed including MODEMs.

f. Dial-up MODEM.

g. Software.

PART 2 PRODUCTS

2.1 GENERAL EQUIPMENT REQUIREMENTS

Units of the same type of equipment shall be products of a single manufacturer. Not withstanding Section 00700 CONTRACT CLAUSES FAR 52.236-5, Material and Workmanship, the HVAC controls system shall be manufactured by Johnson Controls in order to be fully compatible with and interface with the existing HVAC controls system in Phase 1, 2 and 3 Lodging Facility. No other product will be acceptable. The Competition Advocate authorities sole source procurement. Each major component of equipment shall have the manufacturer's name and address, and the model and serial number in a conspicuous place. Materials and equipment shall be standard products of a manufacturer regularly engaged in the manufacturing of such products, which are of a similar material, design and workmanship. The standard products shall have been in a satisfactory commercial or industrial use for two years prior to use on this project. The two years' use shall include applications of equipment and materials under similar circumstances and of similar size. The two years' experience shall be satisfactorily completed by a product which has been sold or is offered for sale on the commercial market through advertisements, manufacturers' catalogs, or brochures. Products having less than a two-year field service record will be acceptable if a certified record of satisfactory field operation, for not less than 6,000 hours exclusive of the manufacturer's factory tests, can be shown. The equipment items shall be supported by a service organization. Items of the same type and purpose shall be identical, including equipment, assemblies, parts and components. Automatic temperature controls shall be direct digital controls that will provide the required sequence of operation.

2.1.1 Electrical and Electronic Devices

Electrical, electronic, and electropneumatic devices not located within a DDC panel shall have a NEMA ICS 1 enclosure in accordance with NEMA 250 unless otherwise shown.

2.1.2 Standard Signals

Except for air distribution terminal unit control equipment, the output of all analog transmitters and the analog input and output of all DDC controllers shall be 4-to-20 mAdc signals. The signal shall originate from current-sourcing devices and shall be received by current-sinking devices.

2.1.3 Ambient Temperature Limits

DDC panels shall have ambient condition ratings of 35 to 120 degrees F and 10 to 95 percent relative humidity, noncondensing. Devices installed outdoors shall operate within limit ratings of minus 35 to plus 150 degrees F. Instrumentation and control elements shall be rated for

continuous operation under the ambient environmental temperature, pressure, humidity, and vibration conditions specified or normally encountered for the installed location.

2.1.4 Year 2000 Compliance

All equipment and software shall be Year 2000 compliant and shall be able to accurately process date/time data (including, but not limited to, calculating, comparing, and sequencing) from, into, and between the twentieth and twenty-first centuries, including leap year calculations, when used in accordance with the product documentation provided by the contractor, provided that all products (e.g. hardware, software, firmware) used in combination with other information technology, shall accurately process date/time data if other information technology properly exchanges date/time data with it.

2.1.5 Software

Software shall be windows base.

2.2 Not Used

2.3 WIRING

2.3.1 Terminal Blocks

Terminal blocks shall be insulated, modular, feed-through, clamp style with recessed captive screw-type clamping mechanism, shall be suitable for rail mounting, and shall have end plates and partition plates for separation or shall have enclosed sides.

2.3.2 Control Wiring for 24-Volt Circuits

Control wiring for 24-volt circuits shall be 18 AWG minimum, stranded copper and shall be rated for 300-volt service.

2.3.3 Wiring for 120-Volt Circuits

Wiring for 120-volt circuits shall be 18 AWG minimum, stranded copper and shall be rated for 600-volt service.

2.3.4 Instrumentation Cable

Instrumentation cable shall be 18 AWG, stranded copper, single- or multiple-twisted, minimum 2 inch lay of twist, 100 percent shielded pairs, and shall have a 300-volt insulation. Each pair shall have a 20 AWG tinned-copper drain wire and individual overall pair insulation. Cables shall have an overall aluminum-polyester or tinned-copper cable-shield tape, overall 20 AWG tinned-copper cable drain wire, and overall cable insulation.

2.3.5 Transformers

Step down transformers shall be utilized where control equipment operates at lower than line circuit voltage. Transformers, other than transformers in bridge circuits, shall have primaries wound for the voltage available and secondaries wound for the correct control circuit voltage. Transformer shall be sized so that the connected load is 80 percent of the rated capacity or less. Transformers shall conform to UL 508 and NEMA ST 1.

2.4 ACTUATORS

Actuators shall be electric or electronic and shall be provided with mounting and connecting hardware. Electric or electronic actuators shall be used for variable air volume (VAV) air terminal units. Actuators shall fail to their spring-return positions on signal or power failure ,except that VAV terminal unit actuators may be of the floating type. The actuator stroke shall be limited in the direction of power stroke by an adjustable stop. Actuators shall have a visible position indicator. Actuators shall smoothly open or close the devices to which they are applied and shall have a full stroke response time of 60 seconds or less. Electric actuators shall have an oil-immersed gear train. Electric or electronic actuators operating in series shall have an auxiliary actuator driver. Electric or electronic actuators used in sequencing applications shall have an adjustable operating range and start point. Pneumatic actuators shall be rated for 25 psig operating pressure except for high-pressure cylinder-type actuators.

2.5 Not Used

2.5 DAMPERS

2.5.1 Damper Assembly

A single damper section shall have blades no longer than 48 inches and shall be no higher than 72 inches. Maximum damper blade width shall be 8 inches. Larger sizes shall be made from a combination of sections. Dampers shall be steel, or other materials where shown. Flat blades shall be made rigid by folding the edges. Blade-operating linkages shall be within the frame so that blade-connecting devices within the same damper section shall not be located directly in the air stream. Damper axles shall be 0.5 inch minimum, plated steel rods supported in the damper frame by stainless steel or bronze bearings. Blades mounted vertically shall be supported by thrust bearings. Pressure drop through dampers shall not exceed 0.04 inch water gauge at 1,000 feet per minute in the wide-open position. Frames shall not be less than 2 inches in width. Dampers shall be tested in accordance with AMCA 500.

2.5.2 Operating Links

Operating links external to dampers, such as crankarms, connecting rods, and line shafting for transmitting motion from damper actuators to dampers, shall withstand a load equal to at least twice the maximum required damper-operating force. Rod lengths shall be adjustable. Links shall be brass, bronze, zinc-coated steel, or stainless steel. Working parts of joints and clevises shall be brass, bronze, or stainless steel. Adjustments of crankarms shall control the open and closed positions of dampers.

2.5.3 Damper Types

Dampers shall be parallel-blade type.

2.5.3.1 Outside Air, Return Air, and Relief Air Dampers

Outside air, return air and relief air dampers shall be provided where shown. Blades shall have interlocking edges and shall be provided with

compressible seals at points of contact. The channel frames of the dampers shall be provided with jamb seals to minimize air leakage. Dampers shall not leak in excess of 20 cfm per square foot at 4 inches water gauge static pressure when closed. Seals shall be suitable for an operating temperature range of minus 40 to plus 200 degrees F. Dampers shall be rated at not less than 2,000 feet per minute air velocity.

2.5.3.2 Mechanical and Electrical Space Ventilation Dampers

Mechanical and electrical space ventilation dampers shall be as shown. Dampers shall not leak in excess of 80 cfm square foot at 4 inches water gauge static pressure when closed. Dampers shall be rated at not less than 1,500 feet per minute air velocity.

2.5.3.3 Fire/Smoke Dampers

Fire/
Smoke-damper and actuator assembly required per NFPA 90A shall meet the Class II leakage requirements of UL 555S. Dampers shall be rated at not less than 2000 fpm air velocity.

2.6.3.4 Insulated Low-Leakage Control Dampers

a. Damper Frame: Minimum 0.08" thick extruded aluminum
b. Damper Blade: Extruded aluminum profiles with ends capped to reduce leakage
c. Blade Seals: Suitable for temperature range of –40 degrees F to 200 degrees F, pressure differential of at least 6" water gauge, and an approach velocity of 4000 fpm.
d. Linkage: Linkage hardware shall be aluminum and zinc plated steel in frame
e. Leakage Rate: Leakage rate shall not exceed 4 cfm/ft2 at 4" water gauge pressure differential as certified under the AMCA Standard 500 certified ratings program.
h. Approved Manufacturers:
(1) Ruskin : CD40x2 or CDTI-50
(2) Approved Equal

2.6 Not Used

2.7 INSTRUMENTATION

2.7.1 Measurements

Transmitters shall be calibrated to provide the following measurements, over the indicated ranges, for an output of 4 to 20 mAdc:

a. Conditioned space temperature, from 50 to 85 degrees F.

2.8 Modulating Room Thermostats

Modulating room thermostats shall have either one output signal, two output signals operating in unison, or two output signals operating in sequence, as required for the application. Each thermostat shall have an adjustable throttling range of 4 to 8 degrees F for each output. Room thermostats shall be enclosed with separate locking covers (guards).

2.9 Not Used
2.10 Not Used
2.11 Not Used

2.11.1 Not Used

2.11.2 Not Used
2.11.3 Not Used

2.12 CONTROL DEVICES AND ACCESSORIES

2.12.1 Relays

Control relay contacts shall have utilization category and ratings selected for the application, with a minimum of two sets of contacts (two normally open, two normally closed) enclosed in a dustproof enclosure. Relays shall be rated for a minimum life of one million operations. Operating time shall be 20 milliseconds or less. Relays shall be equipped with coil transient suppression devices to limit transients to 150 percent of rated coil voltage. Time delay relays shall be 2PDT with eight-pin connectors, dust cover, and a matching rail-mounted socket. Adjustable timing range shall be 0 to 5 minutes. Power consumption shall not be greater than three watts.

2.12.2 Current Sensing Relays

Current sensing relays shall provide a normally-open contact rated at a minimum of 50 volts peak and 1/2 ampere or 25 VA, noninductive. There shall be a single hole for passage of current carrying conductors. The devices shall be sized for operation at 50 percent rated current based on the connected load. Voltage isolation shall be a minimum of 600 volts.

2.13 Not Used

2.14 DIRECT DIGITAL CONTROL (DDC) HARDWARE

All functions, constraints, data base parameters, operator developed programs and any other data shall be downloadable from a portable workstation/tester or the central workstation/tester to network control panels, RIU's, universal programmable controllers, and unitary controllers. Download shall be accomplished through both the primary network and the local DDC portable workstation/tester port.

2.14.1 Network Control Panel

Network control panels shall be microcomputer-based with sufficient memory provided to perform all specified and shown network control panel functions and operations, including spare capacity for all spares and its I/O functions specified. Each network control panel and remote I/O units (RIU) shall have a minimum of 10% of its I/O functions as spare capacity but not less than 2 of each type used in each. The type of spares shall be in the same proportion as the implemented I/O functions on the panel, but in no case shall there be less than two spare points of each type. The panel I/O functions shall be furnished complete, with no changes or additions necessary to support implementation of spare functions. Output relays associated with digital signals shall be considered part of the I/O function, whether physically mounted in the enclosure or separately mounted. Implementation of spare points shall necessitate only providing the additional field sensor or control device, field wiring including

connection to the system, and point definition assignment by the operator using the central workstation/tester or portable workstation/tester. The panel shall contain all necessary I/O functions to connect to field sensors and control panels. I/O function operation shall be fully supervised to detect I/O function failures. Network control panels shall operate in an independent stand-alone mode, which is defined as all network control panel operations performed by the network control panel without any continuing input from other Direct digital controls or portable workstation/tester. The network control panel shall be capable of controlling a mix of at least 32 RIUs, unitary controllers, and universal programmable controllers.

2.14.1.1 Integral Features

The network control panel shall include:

a. Main power switch.

b. Power on indicator.

c. Portable workstation/tester port, connector, and if necessary power supply.

d. Manufacturers control network port.

e. On-Off-Auto switches for each DO which controls a device. These switches shall be mounted in the field panel, with the exception of motors, for which the switch shall be mounted at the motor control center. On-Off-Auto switches are not required for DO associated with a status or alarm such as pilot lights. The status of these switches shall be available to the panel for further processing.

f. Minimum-Maximum-Auto switches, or Auto-Manual switches with manual output override, for each AO. The status of these shall be available to the panel for further processing.

g. An intrusion detection device, connected as an alarm.

2.14.1.2 Communication Interfaces

The following communication capabilities shall function simultaneously.

a. Manufacturers Control Network. Manufacturers control network communications interfaces for each data transmission systems (DTS) circuit between network control panels and RIUs, unitary controllers, and universal programmable controllers, shall be provided. Communication interfaces shall be provided between each network control panel and associated I/O functions. The DTS will provide for transmission speeds necessary to comply with performance requirements specified. DTS equipment shall be installed in the network control panel enclosure.

b. Portable Workstation/Tester Port. A communications port for interfacing to a portable workstation/tester shall be provided. Network control panel workstation/tester port other than RS-232,shall be converted to RS-232, including cabling and power supply, and shall be permanently installed in the panel.

c. Primary Network Port. The network control panel shall either have a built in primary network Port or be capable of accepting a primary network port expansion card for future networking to a base wide utility

monitoring and control system (UMCS). The primary network port expansion card shall be either Ethernet (IEEE802.3) or ARCNET.

2.14.1.3 Memory and Real Time Clock (RTC) Backup

The network control panel memory and real time clock functions shall continue to operate for a minimum of 72 hours in the event of a power failure. If rechargeable batteries are provided, automatic charging of batteries shall be provided. Whenever a either a permanent workstation/tester or portable workstation/tester is monitoring the network control panel, a low battery alarm message shall be sent to it.

2.14.1.4 Duplex Outlet

A single phase, 120 Vac electrical service outlet for use with test equipment shall be furnished either inside or within 6 feet of the network control panel enclosure.

2.14.1.5 Locking Enclosures

Locking type mounting cabinets with common keying shall be furnished for each network control panel.

2.14.1.6 Failure Mode

Upon failure of the network control panel, either due to failure of the network control panel hardware or of the manufacturers control network, the network control panel shall revert to the failure mode as shown.

a. Manufacturers Control Network Failure: Upon failure of the manufacturers control network, the network control panel shall operate in an independent stand-alone mode.

b. Network Control Panel Hardware Failure: Upon failure of the network control panel hardware, the network control panel shall cease operation and stop communications with other network control panels, RIUs, unitary controllers and universal programmable controllers connected to the affected network control panel. The affected network control panel shall respond to this failure as specified and shown.

2.14.2 RIU

The RIU shall be functionally a part of the network control panel as specified, but may be remotely located from the network control panel and communicate over a dedicated communication circuit. When remotely located, the I/O functions shall be subject to the same requirements as for the network control panel hardware. RIUs shall be used to connect remote inputs and outputs to a network control panel and shall contain all necessary I/O functions to connect to field sensors and control devices. RIU operation shall be fully supervised by the network control panel to detect failures. Each RIU shall have a minimum of 10 % of its I/O functions as spare capacity. The type of spares shall be in the same proportion as the implemented I/O functions on the RIU, but in no case shall there be less than two spare points of each type. The RIU shall be furnished complete, with no changes or additions necessary to support implementation of spare functions. Output relays associated with digital signals shall be considered part of the I/O function, whether physically mounted in the enclosure or separately mounted. Implementation of spare points by others shall require only providing the additional field sensor

or control device, field wiring including connection to the system, and point definition assignment by the operator. The RIU shall either report the status of all connected points on each scan, or report the status of all points which have changed state or value since the previous scan.

2.14.2.1 Integral Features

The RIU shall include:

a. Main power switch.

b. Power on indicator.

c. Portable workstation/tester port, connector, and if necessary power supply.

d. Manufacturers control network port.

e. On-Off-Auto switches for each DO which controls a device. These switches shall be mounted in the RIU, with the exception of motors, for which the switch shall be mounted at the motor control center. On-Off-Auto switches are not required for DO associated with a status or alarm such as pilot lights. The status of these switches shall be available to the RIU for further processing.

f. Minimum-Maximum-Auto switches, or Auto-Manual switches with manual output override, for each AO. The status of these shall be available to the panel for further processing.

g. An intrusion detection device, connected as an alarm.

2.14.2.2 Duplex Outlet

A single phase, 120 Vac electrical service outlet for use with test equipment shall be furnished either inside or within 6 feet of the RIU.

2.14.2.3 Locking Enclosures

Locking type mounting cabinets with common keying shall be furnished for each RIU.

2.14.2.4 Failure Mode

Upon failure of the RIU, either due to failure of the RIU hardware or of the DTS, the RIU shall revert to the failure mode shown.

2.14.3 Universal Programmable Controller (UPC)

The universal programmable controller shall be a microprocessor based controller designed and programmed to control and monitor systems as shown. Resident programs shall be contained in reprogramable nonvolatile memory. Each universal programmable controller shall contain necessary power supplies, transformers, memory, I/O functions and communications interfaces necessary to perform its required functions and to provide control and monitoring of connected equipment and devices. It shall contain all necessary I/O functions to connect to field sensors and controls. I/O operation shall be fully supervised to detect I/O function failures. It shall provide for operation as a device connected to the system via the manufacturers control network.

2.14.3.1 Integral Features

The universal programmable controller shall include as a minimum:

a. Main power switch.

b. Power on indicator.

c. Portable workstation/tester port, connector, and if necessary power supply.

d. Manufacturers control network port.

e. I/O functions

(1) 8 DI

(2) 4 DO

(3) 8 AI

(4) 4 AO

(5) 1 PA

f. On-Off-Auto switches for each DO which controls a device. These switches shall be mounted in the universal programmable controller, with the exception of motors, for which the switch shall be mounted at the motor control center. On-Off-Auto switches are not required for DO associated with a status or alarm such as pilot lights. The status of these switches shall be available to the panel for further processing.

g. Minimum-Maximum-Auto switches, or Auto-Manual switches with manual output override, for each AO. The status of these shall be available to the panel for further processing.

2.14.3.2 Communication Interfaces

The UPC shall have the following communication capabilities which shall function simultaneously.

a. Manufacturers Control Network. The manufacturers control network communications interface for a data transmission systems (DTS) circuit between the UPC and a network control panels shall be provided. The DTS will provide for transmission speeds necessary to comply with performance requirements specified. DTS equipment shall be installed in the UPC Panel enclosure.

b. Portable Workstation/Tester Port. A communications port for interfacing to a portable workstation/tester shall be provided. A UPC workstation/tester port other than RS-232, shall be converted to RS-232, including cabling and power supply, and shall be permanently installed in the panel.

2.14.3.3 Memory and RTC Backup

The UPC memory and real time clock functions shall continue to operate for a minimum of 72 hours in the event of a power failure. If rechargeable

batteries are provided, automatic charging of batteries shall be provided. Whenever a either a permanent workstation/tester or portable workstation/tester is monitoring the network control panel, a low battery alarm message shall be sent to it.

2.14.3.4 Specific Requirements

Each universal programmable controller shall be accessible for purposes of application selection, control parameters, set point adjustment, and monitoring from any DDC controller connected to the same manufacturers control network as the universal programmable controller. This shall be done using a portable workstation/tester connected to a portable workstation/tester port either directly or via modem.

2.14.3.5 Locking Enclosures

Locking type mounting cabinets with common keying shall be furnished for each enclosure.

2.14.3.6 Failure Mode

Upon failure of the universal programmable controller, it shall revert to the failure mode of operation as shown.

2.14.4 Unitary Controller

The unitary controller shall be a microprocessor based, stand-alone, dedicated purpose controller, communicating with the network control panel, designed and programmed to control air distribution system mixing boxes, terminal units, heat pumps, fan coil units, self-contained DX units or VAV boxes as shown. Each unitary controller shall contain resident programs in nonvolatile memory for each specific application implemented. Each unitary controller shall contain necessary power supplies, transformers, memory, I/O functions and communications interfaces necessary to perform its required functions and to provide control and monitoring of connected equipment and devices. It shall contain all necessary I/O functions to connect to field sensors and controls. I/O operation shall be fully supervised to detect I/O function failures and shall provide for operation as a device connected to the network control panel via the manufacturers control network.

2.14.4.1 Integral Features

The unitary controller shall include:

a. Main power switch.

b. Power on indicator.

c. Portable workstation/tester port, connector, and power supply.

d. Manufacturers control network port.

e. All I/O functions required to implement the requirements as shown.

f. On-Off-Auto switches for each DO which controls a device. These switches shall be mounted in the field panel, with the exception of motors, for which the switch shall be mounted at the motor control center. On-Off-Auto switches are not required for DO associated with a status or

alarm such as pilot lights. The status of these switches shall be available to the panel for further processing.

g. Minimum-Maximum-Auto switches, or Auto-Manual switches with manual output override, for each AO. The status of these shall be available to the panel for further processing.

2.14.4.2 Communication Interfaces

The unitary controller shall have the following communication capabilities which shall function simultaneously.

a. Manufacturers Control Network. The manufacturers control network communications interface for a data transmission systems (DTS) circuit between the unitary controller and a network control panel shall be provided. The DTS will provide for transmission speeds necessary to comply with performance requirements specified. DTS equipment shall be installed in the unitary control panel enclosure.

b. Portable Workstation/Tester Port. A communications port for interfacing to a portable workstation/tester shall be provided. A unitary controller workstation/tester port other than RS-232, shall be converted to RS-232, including cabling and power supply, and shall be permanently installed in the panel. For unitary controller applications where the controller is not mounted in an enclosure, such as for fan-coil units or VAV terminal units, a portable conversion device for an RS-232 connection to the portable workstation/tester may be provided.

2.14.4.3 Specific Requirements

Unitary controller components for new air distribution terminal units shall be furnished to the air distribution terminal unit manufacturer for factory mounting and calibration. Existing air distribution terminal units shall be controlled by field installed unitary controllers.

a. Accessibility and Interfaces: Each unitary controller shall be accessible for purposes of application selection, control parameters, set point adjustment, and monitoring using a portable workstation/tester connected to the manufacturers control network. They shall also be accessible with a portable workstation/tester connected to the unitary controller portable workstation/tester port.

2.14.4.4 Failure Mode

Upon failure of the unitary controller, it shall revert to the failure mode of operation as shown.

2.14.5 Not Used

2.14.6 I/O Functions

2.14.6.1 DDC Hardware I/O Functions

I/O Functions shall be provided as part of the DDC system and shall be in accordance with the following:

a. The analog input (AI) function shall monitor each analog input, perform A-to-D conversion, and hold the digital value in a buffer for interrogation. The A-to-D conversion shall have a minimum resolution of 10 bits plus sign. Signal conditioning shall be provided for each analog input. Analog inputs shall be individually calibrated for zero and span, in hardware or in software. The AI shall incorporate common mode noise rejection of 50 dB from 0 to 100 Hz for differential inputs, and normal mode noise rejection of 20 dB at 60 Hz from a source impedance of 10,000 ohms. Input ranges shall be within the range of 4-to-20 mAdc.

b. The analog output (AO) function shall accept digital data, perform D-to-A conversion, and output a signal within the range of 4-to-20 mAdc. D-to-A conversion shall have a minimum resolution of eight bits plus sign. Analog outputs shall be individually calibrated for zero and span. Short circuit protection on voltage outputs and open circuit protection on current outputs shall be provided. An individual gradual switch for manual override of each analog output and means of physically securing access to these switches shall be provided. Each AO shall have a three-position switch for selection of the DDC control signal, no control, or a locally generated control signal for connection to the controlled device. Feedback shall be provided to the system as to the status of the output (manual control or automatic). Switches for pneumatic control outputs shall provide a connection for an externally generated pneumatic signal. All switches shall be either of a key operated design with the same keying system used for other outputs or otherwise suitably protected from unauthorized access.

c. The digital input (DI) function shall accept on-off, open-close, or other change of state (two state data) indications. Isolation and protection against an applied steady-state voltage up to 180 Vac peak shall be provided.

d. The digital output (DO) function shall provide contact closures for momentary and maintained operation of output devices. Closures shall have a minimum duration of 0.1 second. DO relays shall have an initial breakdown voltage between contacts and coil of at least 500 V peak. Electromagnetic interference suppression shall be furnished on all output lines to limit transients to nondamaging levels. Protection against an applied steady-state voltage up to 180 Vac peak shall be provided. Minimum contact rating shall be one ampere at 24 Vac. Key locked HOA switches shall be provided for manual override of each digital output. Feedback shall be provided to the system as to the status of the output (manual control or automatic). Switches shall be common keyed.

e. The pulse accumulator function shall have the same characteristics as the DI. In addition, a buffer shall be provided to totalize pulses and allow for interrogation by the DDC system. The pulse accumulator shall accept rates up to 20 pulses per second. The totalized value shall be reset to zero upon operator's command.

f. Signal conditioning for sensors shall be provided as specified.

g. The binary coded decimal (BCD) function: The BCD function shall have the same characteristics as the DI, except that, in addition, a buffer shall be provided to totalize inputs and allow for interrogation by the network control panel. The BCD function shall have 16-channel optically

isolated buffered inputs to read four digit numbers. The BCD function shall accumulate inputs at rates up to 10 inputs per second.

2.14.6.2 Failure Mode

Upon failure of the I/O function, including data transmission failure, logic power supply failure, DDC processor malfunction, software failure, interposing relay power failure, or any other failure which prevents stand alone operation of any DDC normally capable of stand alone operation, connected outputs shall be forced to the failure mode shown.

2.14.7 Data Terminal Cabinet (DTC)

The DTC shall be an independent metallic enclosure not physically part of the network control panel/RIU as shown. The DTC shall be sized to accommodate the number of I/O functions required for each network control panel/RIU, including installed spares, plus 10% expansion for each type of I/O function provided. The DTC shall be divided into analog input and output groups and digital input and output groups. The DTC shall be provided with double sided screw type terminal strips. One side of the terminal strip shall be used for termination of field wiring from instrumentation-mentation and controls. The other side shall be used to connect the DTC to the network control panel/RIU. Terminal strips shall have individual terminal identification numbers. The DTC shall be a locking type mounting enclosure, with common keying and door switch wired to an input for intrusion alarm annunciation at the central station. DTC keying shall be identical to network control panel/RIU keying.

2.15 DDC SOFTWARE

All DDC software described in this specification shall be furnished as part of the complete DDC System.

2.15.1 Operating System

Each DDC shall contain an operating system that controls and schedules that DDC's activities in real time. The DDC shall maintain a point database in its memory that includes all parameters, constraints, and the latest value or status of all points connected to that DDC. The execution of DDC application programs shall utilize the data in memory resident files. The operating system shall include a real time clock function that maintains the seconds, minutes, hours, date and month, including day of the week. Each DDC real time clock shall be automatically synchronized with the network control panel real time clock at least once per day to plus or minus 10 seconds. When the network control panel is connected to a central workstation/tester, the network control panel RTC shall be updated by the central workstation/tester RTC. The time synchronization shall be accomplished without operator intervention and without requiring system shutdown. The operating system shall allow loading of software, data files data entry, and diagnostics from the central workstation/tester both locally through the central workstation/tester port and remotely through a network control panel and the manufacturers control network.

2.15.1.1 Startup

The DDC shall have startup software that causes automatic commencement of operation without human intervention, including startup of all connected I/O functions. A DDC restart program based on detection of power failure at the DDC shall be included in the DDC software. Upon restoration of

power to the DDC, the program shall restart equipment and restore loads to the state at time of power failure, or to the state as commanded by time programs or other overriding programs. The restart program shall include start time delays between successive commands to prevent demand surges or overload trips. The startup software shall initiate operation of self-test diagnostic routines. Upon failure of the DDC, if the database and application software are no longer resident or if the clock cannot be read, the DDC shall not restart and systems shall remain in the failure mode indicated until the necessary repairs are made. If the database and application programs are resident, the DDC shall resume operation after an adjustable time delay of from 0 to 600 seconds. The startup sequence for each DDC shall include a unique time delay setting for each control output when system operation is initiated.

2.15.1.2 Operating Mode

Each DDC shall control and monitor functions as specified, independent of communications with other DDC. This software shall perform all DDC functions and DDC resident application programs as specified using data obtained from I/O functions and based upon the DDC real time clock function. When communications circuits between the DDC are operable, the DDC shall obtain real time clock updates and any required global data values transmitted from other network control panels. The DDC software shall execute commands after performing constraints checks in the DDC. Status and analog values, including alarms and other data shall be transmitted from other network control panels when communications circuits are operable. If communications are not available, each DDC shall function in stand-alone mode and operational data, including the latest status and value of each point and results of calculations, normally transmitted from other network control panels shall be stored for later transmission to the network control panel. Storage for the latest 256 values shall be provided at each network control panel. Each DDC shall accept software downloaded from the network control panel. Constraints shall reside at the DDC.

2.15.1.3 Failure Mode

Upon failure for any reason, each DDC shall perform an orderly shutdown and force all DDC outputs to a predetermined (failure mode) state, consistent with the failure modes shown and the associated control device.

2.15.2 Functions

The Contractor shall provide software necessary to accomplish the following functions, as appropriate, fully implemented and operational, within each network control panel, RIU, unitary controller and universal programmable controller.

a. Scanning of inputs.

b. Control of outputs.

c. Reporting of analog changes outside a selectable differential.

d. Reporting of unauthorized digital status.

e. Reporting of alarms automatically to network control panel.

f. Reporting of I/O status to network control panel upon request.

g. Maintenance of real time, updated by the network control panel at least once a day.

h. Communication with the network control panel.

i. Execution of DDC resident application programs.

j. Averaging or filtering of AIs.

k. Constraints checks (prior to command issuance).

l. Diagnostics.

m. Portable workstation/tester operation as specified.

n. Reset of PA by operator based on time and value.

2.15.2.1 Analog Monitoring

The system shall measure and transmit analog values including calculated analog points. An analog change in value is defined as a change exceeding a preset differential value as specified. The record transmitted for each analog value shall include a readily identifiable flag which indicates the abnormal status of the value when it deviates from operator selectable upper and lower analog limits. Analog values shall be expressed in proper engineering units with sign. Engineering units conversions shall be provided for each measurement. Each engineering units conversion set shall include range, span, and conversion equation. A vocabulary of engineering unit descriptors shall be provided, using at least three alphanumeric characters to identify information in the system. The system shall support 255 different engineering units.

2.15.2.2 Logic (Virtual) Points

Logic (virtual) points shall be software points entered in the point database which are not directly associated with a physical I/O function. Logic (virtual) points shall be analog or digital points created by calculation from any combination of digital and analog points, or other data having the properties of real points, including alarms, without the associated hardware. Logic (virtual) points shall be defined or calculated and entered into the database by the Contractor. The calculated analog point shall have point identification in the same format as any other analog point. The calculated point shall be used in any program where the real value is not obtainable directly. Constants used in calculations shall be changeable on-line by the operator. Calculated point values shall be current for use by the system within 10 seconds of the time of any input changes.

2.15.2.3 State Variables

If an analog point represents more than two (up to eight) specific states, each state shall be nameable. For example, a level sensor shall be displayed at its measured engineering units plus a state variable with named states usable in programs or for display such as low alarm/low/normal/high/high alarm.

2.15.2.4 Analog Totalization

Any analog point shall be operator assignable to the totalization program.

Up to eight analog values shall be totalized within a selectable time period. At the end of the period, the totals shall be stored. Totalization shall then restart from zero for the next time period. The program shall keep track of the peak and total value measured during the current period and for the previous period. The operator shall be able to set or reset each totalized value individually. The time period shall be able to be operator defined, modified or deleted on-line.

2.15.2.5 Energy Totalization

The system shall calculate the heat energy in Btus, for each energy source consumed by the mechanical systems specified, totalize the calculated Btus, the instantaneous rate in Btus per hour, and store totals in thousands of Btus (MBtu). The Btus calculated shall be totalized for an adjustable time period. The time period shall be defined uniquely for each Btu totalization.

2.15.2.6 Trending

Any analog or calculated point shall be operator assignable to the trend program. Up to eight points shall be sampled at individually assigned intervals, selectable between one minute and two hours. A minimum of the most recent 128 samples of each trended point shall be stored. The sample intervals shall be able to be defined, modified, or deleted on-line.

2.15.3 I/O Point Database/Parameter Definition

Each I/O point shall be defined in a database residing in the DDC. The definition shall include all physical parameters associated with each point. Each point shall be defined and entered into the database by the Contractor, including as applicable:

a. Name.

b. Device or sensor type (i.e., sensor, control relay, motors).

c. Point identification number.

d. Unit.

e. Building number.

f. Area.

g. Island.

h. DDC number and channel address.

i. KW (running).

j. KW (starting).

k. Sensor range.

l. Controller range.

m. Sensor span.

n. Controller span.

o. Engineering units conversion (scale factor).

p. Setpoint (analog).

q. High reasonableness value (analog).

r. Low reasonableness value (analog).

s. High alarm limit differential (return to normal).

t. Low alarm limit differential (return to normal).

u. High alarm limit (analog).

v. Low alarm limit (analog).

w. Alarm disable time period upon startup or change of setpoint.

x. Analog change differential (for reporting).

y. Alarm class and associated primary message text.

z. High accumulator limit (pulse).

aa. Status description.

bb. Run time target.

cc. Failure mode as specified and shown.

dd. Constraints as specified.

2.15.4 Alarm Processing

Each DDC shall have alarm processing software for AI, DI, and PA alarms for all real and virtual points connected to that DDC.

2.15.4.1 Digital Alarms Definition

Digital alarms are those abnormal conditions indicated by DIs as specified and shown.

2.15.4.2 Analog Alarms Definition

Analog alarms are those conditions higher or lower than a defined value, as measured by an AI. Analog readings shall be compared to predefined high and low limits, and alarmed each time a value enters or returns from a limit condition. Unique high and low limits shall be assigned to each analog point in the system. Analog alarm limits shall be stored in the DDC database. Each analog alarm limit shall have an associated unique limit differential specifying the amount by which a variable must return into the proper operating range before being annunciated as a return-to-normal-state. All limits and differentials shall be entered on-line by the operator in limits of the measured variable, without interruption or loss of monitoring of the point concerned. The program shall automatically change the high or low limits or both, of any analog point, based on time scheduled operations as specified, allowing for a time interval before the alarm limit becomes effective. In CPA applications,

key the limit to a finite deviation traveling with the setpoint. The system shall automatically suppress analog alarm reporting associated with a digital point when that digital point is turned off.

2.15.4.3 Pulse Accumulator Alarms Definition

Pulse accumulator alarms are those conditions calculated from totalized values of accumulator inputs or PA input rates that are outside defined limits as specified and shown. PA totalized values shall be compared to predefined limits and alarmed each time a value enters a limit condition. Unique limits shall be assigned to each PA point in the system. Limits shall be stored in the DDC database.

2.15.5 Constraints

2.15.5.1 Equipment Constraints Definitions

Each control point in the database shall have DDC resident constraints defined and entered by the Contractor, including as applicable:

a. Maximum starts (cycles) per hour.

b. Minimum off time.

c. Minimum on time.

d. High limit (value in engineering units).

e. Low limit (value in engineering units).

2.15.5.2 Constraints Checks

Control devices connected to the system shall have the DDC memory resident constraints checked before each command is issued to insure that no equipment damage will result from improper operation. Each command shall be executed by the DDC only after all constraints checks have been passed. Each command point shall have unique constraints assigned. High and low "reasonableness" values or one differential "rate-of-change" value shall be assigned to each AI. Values outside the reasonableness limits shall be rejected and an alarm message sent to the network control panel or portable workstation/tester. Status changes and analog point values shall be reported to the workstation upon operator request, such as for reports, alphanumeric displays, graphic displays, and application programs. Each individual point shall be capable of being selectively disabled by the operator from a workstation/tester. Disabling a point shall prohibit monitoring and automatic control of that point.

2.15.6 Diagnostics

Each DDC shall have self-test diagnostic routines implemented in firmware. The tests shall include routines that exercise memory. Diagnostic software shall be usable in conjunction with the central workstation/tester and portable workstation/tester. The software shall display messages in English to inform the tester's operator of diagnosed problems.

2.15.7 Summer-Winter Operation Monitoring

The system shall provide software to automatically change the operating parameters, monitoring of alarm limits, and start-stop schedules for each

mechanical system from summer to winter and vice-versa. The software shall provide automatic commands to applications programs to coordinate proper summer or winter operation. Change over setpoints shall be operator selectable and settable.

2.15.8 Control Sequences and Control Loops

Sufficient memory shall be provided to implement the requirements specified and shown for each DDC. Specific functions to be implemented are defined in individual system control sequences and database tables shown in the drawings, and shall include, as applicable, the following:

a. PI Control: This function shall provide proportional control and proportional plus integral control.

b. Two Position Control: This function shall provide control for a two state device by comparing a set point against a process variable and an established deadband.

c. Floating Point Control: This function shall exercise control when an error signal exceeds a selected deadband, and shall maintain control until the error is within the deadband limits.

d. Signal Selection: This function shall allow the selection of the highest or lowest analog value from a group of analog values as the basis of control. The function shall include the ability to cascade analog values so that large numbers of inputs can be reduced to one or two outputs.

e. Signal Averaging: This function shall allow the mathematical calculation of the average analog value from a group of analog values as the basis of control. The function shall include the ability to "weight" the individual analog values so that the function output can be biased as necessary to achieve proper control.

f. Reset Function: This function shall develop an AO based on up to two AIs and one operator specified reset schedule.

g. Cooling/Heating Operation Program: Software shall be provided to change, either automatically or on operator command, the operating parameters, monitoring of alarm limits, and start-stop schedules for each mechanical system where such a change from cooling to heating and vice versa is meaningful. The software shall provide commands to application programs to coordinate cooling or heating mode operation. Software shall automatically switch facilities from cooling to heating, and vice versa, based on schedules or temperatures. All HVAC equipment and systems shall be assigned to the program.

2.15.9 Command Priorities

A scheme of priority levels shall be provided to prevent interaction of a command of low priority with a command of higher priority. The system shall require the latest highest priority command addressed to a single point to be stored for a period of time longer than the longest time constraint in the on and off states, insuring that the correct command shall be issued when the time constraint is no longer in effect or report the rejected command. Override commands entered by the operator shall have higher priority than those emanating from applications programs.

2.15.10 Resident Application Software

The Contractor shall provide resident applications programs to achieve the sequences of operation, parameters, constraints, and interlocks necessary to provide control of the systems connected to the DDC system. Application programs shall be resident and shall execute in the DDC, and shall coordinate with each other, to insure that no conflicts or contentions remain unresolved. The Contractor shall coordinate the application programs specified with the equipment and controls operation, and other specified requirements. A scheme of priority levels shall be provided to prevent interaction of a command of low priority with a command of higher priority. The system shall require the latest highest priority command addressed to a single point to be stored for a period of time longer than the longest time constraint in the ON and OFF states, insuring that the correct command shall be issued when the time constraint is no longer in effect or the rejected command shall be reported. Override commands entered by the operator shall have higher priority than those emanating from application programs.

2.15.10.1 Program Inputs and Outputs

The Contractor shall select the appropriate program inputs listed for each application program to calculate the required program outputs. Where the specific program inputs are not available, a "default" value or virtual point appropriate for the equipment being controlled and the proposed sequence of operation shall be provided to replace the missing input, thus allowing the application program to operate. AIs to application programs shall have an operator adjustable deadband to preclude short cycling or hunting. Program outputs shall be real analog or digital outputs or logic (virtual) points as required to provide the specified functions. The Contractor shall select the appropriate input and output signals to satisfy the requirements for control of systems as shown.

2.15.10.2 DDC General Conditions

The Contractor shall provide software required to achieve the sequences of operation, parameters, constraints, and interlocks shown. Application software shall be resident in the DDC in addition to any other required software. In the event of a DDC failure, the controlled equipment shall continue to function in the failure mode shown.

2.15.10.3 Scheduled Start/Stop Program

This program shall start and stop equipment based on a time of day schedule for each day of the week, and on a holiday schedule. To eliminate power surges, an operator adjustable time delay shall be provided between consecutive start commands.

a. Program Inputs:

(1) Day of week/holiday.

(2) Time of day.

(3) Cooling and heating high-low alarm limits.

(4) Cooling and heating start-stop schedules.

(5) Cooling or heating mode of operation.

(6) Equipment status.

(7) Equipment constraints.

(8) Consecutive start time delay.

b. Program Outputs: Start/stop signal.

2.15.10.4 Optimum Start/Stop Program

This program shall start and stop equipment as specified for the scheduled start/stop program, but shall include a sliding schedule based on indoor and outdoor air conditions. The program shall take into account the thermal characteristics of the structure, and indoor and outdoor air conditions, using prediction software to determine the minimum time of HVAC system operation needed to satisfy space environmental requirements at the start of the occupied cycle, and determine the earliest time for stopping equipment at the day's end without exceeding space environmental requirements. An adaptive control algorithm shall be utilized to automatically adjust the constants used in the program.

a. Program Inputs:

(1) Day of week/holiday.

(2) Time of day.

(3) Cooling or heating mode of operation.

(4) Equipment status.

(5) Cooling and heating building occupancy schedules.

(6) Space temperature.

(7) Building heating constant (operator adjustable and automatically optimized).

(8) Building cooling constant (operator adjustable and automatically optimized).

(9) OA temperature.

(10) Required space temperature at occupancy (heating).

(11) Required space temperature at occupancy (cooling).

(12) Equipment constraints.

(13) Cooling and heating high-low alarm limits.

b. Program Outputs: Start/stop signal.

2.15.10.5 Day-Night Setback Program

The software shall limit the rise or drop of space temperature (or specified fluid temperature) during unoccupied hours. Whenever the space temperature (or specified fluid temperature) is above (or below for heating) the operator assigned temperature limit, the system shall be

turned on until the temperature is within the assigned temperature limit.

a. Program Inputs:

(1) Day of week.

(2) Time of day.

(3) Cooling or heating mode of operation.

(4) Cooling and heating occupancy schedules.

(5) Equipment status.

(6) Space temperature (or specified fluid temperature).

(7) Minimum space temperature (or specified fluid temperature) during unoccupied periods.

(8) Maximum space temperature (or specified fluid temperature) during unoccupied periods.

(9) Equipment constraints.

b. Program Outputs: Start/stop signal.

2.15.10.6 Not Used

2.15.10.7 Not Used

2.15.10.8 Not Used

2.15.10.9 Not Used

2.15.10.10 Not Used

2.15.10.11 Not used

2.15.10.12 Not Used

2.15.10.13 Not Used

2.15.10.14 Not Used

2.15.10.15 Not Used

2.15.10.16 Not Used

2.15.10.17 Not Used

2.15.10.18 Not Used.

2.15.10.19 Not Used

2.15.10.20 Not Used

2.15.10.21 Not Used.

2.15.10.22 Not Used

2.15.10.23 Not Used

PART 3 EXECUTION

3.1 GENERAL INSTALLATION CRITERIA

3.1.1 HVAC Control System

The HVAC control system shall be completely installed and ready for operation. Dielectric isolation shall be provided where dissimilar metals are used for connection and support. Penetrations through and mounting holes in the building exterior shall be made watertight. The HVAC control system installation shall provide clearance for control system maintenance by maintaining access space between coils, access space to mixed-air plenums, and other access space required to calibrate, remove, repair, or replace control system devices. The control system installation shall not interfere with the clearance requirements for mechanical and electrical system maintenance.

3.1.2 Software Installation

Software shall be loaded for an operational system, including databases for all points, operational parameters, and system, command, and application software. The Contractor shall provide original and backup copies of source, excluding the general purpose operating systems and utility programs furnished by computer manufacturers and the non-job-specific proprietary code furnished by the system manufacturer, and object modules for software on each type of media utilized, within 30 days of formal Government acceptance. In addition, a copy of individual floppy disks of software for each DDC panel shall be provided.

3.1.3 Device Mounting Criteria

Devices mounted in or on piping or ductwork, on building surfaces, in mechanical/electrical spaces, or in occupied space ceilings shall be installed in accordance with manufacturer's recommendations and as shown. Control devices to be installed in piping and ductwork shall be provided with required gaskets, flanges, thermal compounds, insulation, piping, fittings, and manual valves for shutoff, equalization, purging, and calibration. Strap-on temperature sensing elements shall not be used except as specified.

3.1.4 Wiring Criteria

Wiring external to control panels, including low-voltage wiring, shall be installed in metallic raceways. Nonmetallic-sheathed cables or metallic-armored cables may be installed in areas permitted by NFPA 70 Wiring shall be installed without splices between control devices and DDC panels. Instrumentation grounding shall be installed as necessary to prevent ground loops, noise, and surges from adversely affecting operation of the system. Ground rods installed by the contractor shall be tested as specified in IEEE Std 142. Cables and conductor wires shall be tagged at both ends, with the identifier shown on the shop drawings. Electrical work

shall be as specified in Section 16415 ELECTRICAL WORK, INTERIOR and as shown.

3.2 CONTROL SYSTEM INSTALLATION

3.2.1 Not Used3.2.2 Not Used

3.2.3 Room Instrument Mounting

Room instruments shall be mounted so that their sensing elements are 5 feet above the finished floor unless otherwise shown. Temperature setpoint device shall be recess mounted.

3.2.4 Not Used

3.2.5 Not Used
3.2.6 Not Used3.2.7 Not Used3.2.8 Not Used3.2.9 Not Used3.2.10 Not Used
3.2.10.1 Not Used3.3 CONTROL SEQUENCES OF OPERATION

3.3.1 General Requirements - HVAC Systems

These requirements shall apply to all primary HVAC systems unless modified herein. The sequences describe the actions of the control system for one direction of change in the HVAC process analog variable, such as temperature, humidity or pressure. The reverse sequence shall occur when the direction of change is reversed.

3.3.1.1 Not Used3.3.2 Not Used

3.3.3 Unit Heater and Cabinet Unit Heater

All Modes - A wall-mounted thermostat with an "AUTO-OFF" switch located as shown, shall cycle the fan to maintain its setpoint as shown when the switch is in the "AUTO" position. When the switch is in the "OFF" position, the fan shall be stopped.

3.3.4 Not Used

3.3.5 All-Air Small Package Unitary System

A microprocessor-based room thermostat, located as shown, with "HEAT-OFF-COOL" and "AUTO-ON" switches shall control the system. Heating Mode - Cooling unit shall be off, and heating shall be active. The thermostat shall operate the condensing unit and system fan to maintain the day and night setpoints as shown. Programmed occupied times shall be considered "day" and programmed unoccupied times shall be considered "night." Cooling Mode - Heating unit shall be off. During the day the thermostat shall operate the condensing units and system fan to maintain the setpoint. The condensing unit shall be off at night. Off Mode - The system shall be off. On Mode - The system fan shall run continuously. Auto Mode - The system fan shall operate whenever heating or cooling is required.

3.3.6 Not Used
3.3.7 Not Used
3.3.8 Not Used.

3.3.8.1 Not Used
3.3.8.2 Not Used
3.3.8.3 Not Used

3.3.9 Not Used

3.3.10 Not Used

3.3.11 Not Used

3.3.12 Not Used

3.3.13 Not Used

3.3.14 Not Used

3.3.15 Not Used

3.3.16 Not Used

3.3.17 Not Used

3.3.18 Not Used

3.3.18.1 Not Used

3.3.18.2 Not Used

3.3.18.3 Not Used

3.3.18.4 Not Used

3.3.18.5 Not Used

3.3.18.6 Not Used

3.3.18.7 Not Used

3.3.18.8 Not Used

3.3.18.9 NotUsed

3.3.18.10 Not Used.

3.3.18.11 Not Used

3.3.18.12 Not Used

3.3.19 Not Used

3.3.20 Not Used

3.3.21 Not Used

3.3.22 Not Used

3.4 COMMISSIONING PROCEDURES

3.4.1 Evaluations

The Contractor shall make the observations, adjustments, calibrations, measurements, and tests of the control systems, set the time schedule, and make any necessary control system corrections to ensure that the systems function as described in the sequence of operation.

3.4.1.1 Item Check

Signal levels shall be recorded for the extreme positions of each controlled device. An item-by-item check of the sequence of operation requirements shall be performed using Steps 1 through 4 in the specified control system commissioning procedures. Steps 1, 2, and 3 shall be performed with the HVAC system shut down; Step 4 shall be performed after the HVAC systems have been started. External input signals to the DDC system (such as starter auxiliary contacts, and external systems) may be simulated in steps 1, 2, and 3. With each operational mode signal change, DDC system output relay contacts shall be observed to ensure that they function.

3.4.1.2 Weather Dependent Test Procedures

Weather dependent test procedures that cannot be performed by simulation shall be performed in the appropriate climatic season. When simulation is used, the actual results shall be verified in the appropriate season.

3.4.2 Not Used

3.4.3 Unit Heater and Cabinet Unit Heater

The "OFF/AUTO" switch shall be placed in the "OFF" position. Each space thermostat temperature setting shall be turned up so that it makes contact to turn on the unit heater fans. The unit heater fans shall not start. The "OFF/AUTO" switch shall be placed in the "AUTO" position. It shall be ensured that the unit heater fans start. Each space thermostat temperature setting shall be turned down, and the unit heater fans shall stop. The thermostats shall be set at their temperature setpoints. The results of testing of one of each type of unit shall be logged.

3.4.4 Not Used

3.4.5 All-Air Small Packaged Unitary

The schedules shall be manually entered for day temperature and night temperature setpoints as shown. The fan "AUTO/ON" switch shall be set to "ON." The time shall be manually entered as "DAY." The "HEATING/COOLING" switch shall be set to "HEATING" and it shall be ensured that cooling is off. The temperature setpoint shall be raised and it shall be ensured that heating starts. The "HEATING/COOLING" switch shall be set to "COOLING" and it shall be ensured that heat is off. The temperature setpoint shall be lowered and it shall be ensured that cooling starts. The fan "AUTO/ON" switch shall be set to "AUTO" and the foregoing procedure repeated. The fan shall start and stop automatically with the starting and stopping of heating and cooling. The time shall be manually entered as "NIGHT." The foregoing procedures shall be repeated. When the system is verified as operational, the correct "DAY" and "NIGHT" temperature settings shall be restored and the correct time restored. The power to the thermostat shall be shut off and it shall be verified that the thermostat clock keeps time. The results of testing of one of each type of unit shall be logged.

3.4.6 Not Used
3.4.7 Not Used

3.4.8 Not Used.

3.4.9 Not Used

3.4.10 Not Used

3.4.11 Not Used

3.4.12 Not Used

3.4.13 Not Used

3.4.14 Not Used

3.4.15 Not Used

3.4.16 Not Used

3.4.17 Not Used

3.4.18 Not Used

3.4.19 Not Used

3.4.20 Not Used

3.4.21 Not Used

3.4.22 Not Used

3.5 BALANCING, COMMISSIONING, AND TESTING

3.5.1 Coordination with HVAC System Balancing

Commissioning of the control system, except for tuning of controllers, shall be performed prior to or simultaneous with HVAC system balancing. The contractor shall tune the HVAC control system after all air system and hydronic system balancing has been completed, minimum damper positions set and a report has been issued.

3.5.2 Control System Calibration, Adjustments, and Commissioning

Control system commissioning shall be performed for each HVAC system, using test plans and procedures previously approved by the Government. The Contractor shall provide all personnel, equipment, instrumentation, and

supplies necessary to perform commissioning and testing of the HVAC control system. All instrumentation and controls shall be calibrated and the specified accuracy shall be verified using test equipment with calibration traceable to NIST standards. Wiring shall be tested for continuity and for ground, open, and short circuits. Tubing systems shall be tested for leaks. Mechanical control devices shall be adjusted to operate as specified. HVAC control panels shall be pretested off-site as a functioning assembly ready for field connections, calibration, adjustment, and commissioning of the operational HVAC control system. Control parameters and logic (virtual) points including control loop setpoints, gain constants, and integral constraints, shall be adjusted before the system is placed on line. Communications requirements shall be as indicated. Written notification of any planned commissioning or testing of the HVAC Control systems shall be given to the Government at least 14 calendar days in advance.

3.5.3 Performance Verification Test

The Contractor shall demonstrate compliance of the HVAC control system with the contract documents. Using test plans and procedures previously approved by the Government, the Contractor shall demonstrate all physical and functional requirements of the project. The performance verification test shall show, step-by-step, the actions and results demonstrating that the control systems perform in accordance with the sequences of operation. The performance verification test shall not be started until after receipt by the Contractor of written permission by the Government, based on Government approval of the Commissioning Report and completion of balancing. The tests shall not be conducted during scheduled seasonal off periods of base heating and cooling systems.

3.5.4 Endurance Test

The endurance test shall be used to demonstrate the specified overall system reliability requirement of the completed system. The endurance test shall not be started until the Government notifies the Contractor in writing that the performance verification test is satisfactorily completed. The Government may terminate the testing at any time when the system fails to perform as specified. Upon termination of testing by the Government or by the Contractor, the Contractor shall commence an assessment period as described for Phase II. Upon successful completion of the endurance test, the Contractor shall deliver test reports and other documentation as specified to the Government prior to acceptance of the system.

a. Phase I (Testing). The test shall be conducted 24 hours per day, 7 days per week, for 15 consecutive calendar days, including holidays, and the system shall operate as specified. The Contractor shall make no repairs during this phase of testing unless authorized by the Government in writing.

b. Phase II (Assessment). After the conclusion of Phase I, the Contractor shall identify failures, determine causes of failures, repair failures, and deliver a written report to the Government. The report shall explain in detail the nature of each failure, corrective action taken, results of tests performed, and shall recommend the point at which testing should be resumed. After delivering the written report, the Contractor shall convene a test review meeting at the jobsite to present the results and recommendations to the Government. As a part of this test review meeting, the Contractor shall demonstrate that all failures have been corrected by performing appropriate portions of the performance

verification test. Based on the Contractor's report and test review meeting, the Government may require that the Phase I test be totally or partially rerun. After the conclusion of any retesting which the Government may require, the Phase II assessment shall be repeated as if Phase I had just been completed.

3.5.5 Posted and Panel Instructions

Posted and Panel Instructions, showing the final installed conditions, shall be provided for each system. The posted instructions shall consist of laminated half-size drawings and shall include the control system schematic, equipment schedule, sequence of operation, wiring diagram, communication network diagram, and valve and damper schedules. The posted instructions shall be permanently affixed, by mechanical means, to a wall near the control panel. Panel instructions shall consist of laminated letter-size sheets and shall include a Routine Maintenance Checklist and as-built configuration check sheets. Panel instructions and one copy of the Operation and Maintenance Manuals, previously described herein, shall be placed inside each control panel or permanently affixed, by mechanical means, to a wall near the panel.

3.6 TRAINING

3.6.1 Training Course Requirements

A training course shall be conducted for 4 operating staff members designated by the Contracting Officer in the maintenance and operation of the system, including specified hardware and software. The training period, for a total of 32 hours of normal working time, shall be conducted within 30 days after successful completion of the performance verification test. The training course shall be conducted at the project site. Audiovisual equipment and 6 sets of all other training materials and supplies shall be provided. A training day is defined as 8 hours of classroom instruction, including two 15 minute breaks and excluding lunchtime, Monday through Friday, during the daytime shift in effect at the training facility.

3.6.2 Training Course Content

For guidance in planning the required instruction, the Contractor shall assume that attendees will have a high school education or equivalent, and are familiar with HVAC systems. The training course shall cover all of the material contained in the Operating and Maintenance Instructions, the layout and location of each HVAC control panel, the layout of one of each type of unitary equipment and the locations of each, the location of each control device external to the panels, the location of the compressed air station, preventive maintenance, troubleshooting, diagnostics, calibration, adjustment, commissioning, tuning, and repair procedures. Typical systems and similar systems may be treated as a group, with instruction on the physical layout of one such system. The results of the performance verification test and the calibration, adjustment and commissioning report shall be presented as benchmarks of HVAC control system performance by which to measure operation and maintenance effectiveness.

---end of section

SECTION TABLE OF CONTENTS

DIVISION 15 - MECHANICAL

SECTION 15990

TESTING, ADJUSTING, AND BALANCING OF HVAC SYSTEMS

08/97

PART 1 GENERAL

1.1 REFERENCES
1.2 SUBMITTALS
1.3 SIMILAR TERMS
1.4 TAB STANDARD
1.5 QUALIFICATIONS
1.5.1 TAB Firm
1.5.2 TAB Specialist
1.6 TAB SPECIALIST RESPONSIBILITIES

PART 2 PRODUCTS (Not Applicable)

PART 3 EXECUTION

3.1 DESIGN REVIEW
3.2 TAB RELATED HVAC SUBMITTALS
3.3 TAB SCHEMATIC DRAWINGS AND REPORT FORMS
3.4 DUCTWORK LEAK TESTING
3.5 TESTING, ADJUSTING, AND BALANCING
3.5.1 TAB Procedures
3.5.2 Systems Readiness Check
3.5.3 Preparation of TAB Report
3.5.4 TAB Verification
3.5.5 Marking of Setting
3.5.6 Identification of Test Ports

-- End of Section Table of Contents --

SECTION 15990

TESTING, ADJUSTING, AND BALANCING OF HVAC SYSTEMS
08/97

PART 1 GENERAL

1.1 REFERENCES

The publications listed below form a part of this specification to the extent referenced. The publications are referred to in the text by basic designation only.

ASSOCIATED AIR BALANCE COUNCIL (AABC)

AABC MN-1	(1989) National Standards for Testing and Balancing Heating, Ventilating, and Air Conditioning Systems

NATIONAL ENVIRONMENTAL BALANCING BUREAU (NEBB)

NEBB Procedural Stds	(1991) Procedural Standards for Testing Adjusting Balancing of Environmental Systems

1.2 SUBMITTALS

Government approval is required for submittals with a "GA" designation; submittals having a "FIO" designation are for information only. The following shall be submitted in accordance with Section 01330 SUBMITTAL PROCEDURES:

SD-01 Data

TAB Related HVAC Submittals; FIO.

A list of the TAB Related HVAC Submittals, no later than 7 days after the approval of the TAB Specialist.

SD-04 Drawings

TAB Schematic Drawings and Report Forms; GA1.

Three copies of the TAB Schematic Drawings and Report Forms, no later than 21 days prior to the start of TAB field measurements.

SD-06 Instructions

TAB Procedures; GA1.

Proposed procedures for TAB, submitted with the TAB Schematic Drawings and Report Forms.

SD-07 Schedules

Systems Readiness Check; FIO.

Proposed date and time to begin the Systems Readiness Check, no later than 7 days prior to the start of the Systems Readiness Check.

TAB Execution; GA1.

Proposed date and time to begin field measurements, making adjustments, etc., for the TAB Report, submitted with the Systems Readiness Check Report.

TAB Verification; GA1.

Proposed date and time to begin the TAB Verification, submitted with the TAB Report.

SD-08 Statements

TAB Firm; GA1.

Certification of the proposed TAB Firm's qualifications by either AABC or NEBB to perform the duties specified herein and in other related Sections, no later than 21 days after the Notice to Proceed. The documentation shall include the date that the Certification was initially granted and the date that the current Certification expires. Any lapses in Certification of the proposed TAB Firm or disciplinary action taken by AABC or NEBB against the proposed TAB Firm shall be described in detail.

TAB Specialist; GA1.

Certification of the proposed TAB Specialist's qualifications by either AABC or NEBB to perform the duties specified herein and in other related Sections, no later than 21 days after the Notice to Proceed. The documentation shall include the date that the Certification was initially granted and the date that the current Certification expires. Any lapses in Certification of the proposed TAB Specialist or disciplinary action taken by AABC or NEBB against the proposed TAB Specialist shall be described in detail.

Instrument Calibration; FIO.

List of each instrument to be used during TAB, stating calibration requirements required or recommended by both the TAB Standard and the instrument manufacturer and the actual calibration history of the instrument, submitted with the TAB Procedures. The calibration history shall include dates calibrated, the qualifications of the calibration laboratory, and the calibration procedures used.

SD-09 Reports

Design Review Report; GA1.

A copy of the Design Review Report, no later than 14 days after approval of the TAB Firm and the TAB Specialist.

Systems Readiness Check Report; GA1.

A copy of completed checklists for each system, each signed by the TAB Specialist, at least 7 days prior to the start of TAB Execution. All items in the Systems Readiness Check Report shall be signed by the TAB Specialist and shall bear the seal of the Professional Society or National Association

used as the TAB Standard.

TAB Report; GA1.

Three copies of the completed TAB Reports, no later that 7 days after the execution of TAB. All items in the TAB Report shall be signed by the TAB Specialist and shall bear the seal of the Professional Society or National Association used as the TAB Standard.

TAB Verification Report; GA1.

Three copies of the completed TAB Verification Report, no later that 7 days after the execution of TAB Verification. All items in the TAB Verification Report shall be signed by the TAB Specialist and shall bear the seal of the Professional Society or National Association used as the TAB Standard.

SD-13 Certificates

Ductwork Leak Testing; FIO.

A written statement signed by the TAB Specialist certifying that the TAB Specialist witnessed the Ductwork Leak Testing, it was successfully completed, and that there are no known deficiencies related to the ductwork installation that will prevent TAB from producing satisfactory results.

1.3 SIMILAR TERMS

In some instances, terminology differs between the Contract and the TAB Standard primarily because the intent of this Section is to use the industry standards specified, along with additional requirements listed herein to produce optimal results. The following table of similar terms is provided for clarification only. Contract requirements take precedent over the corresponding AABC or NEBB requirements where differences exist.

SIMILAR TERMS

Contract Term	AABC Term	NEBB Term
TAB Standard	National Standards for Testing and Balancing Heating, Ventilating, and Air Conditioning Systems	Procedural Standards for Testing Adjusting Balancing of Environmental Systems.
TAB Specialist	TAB Engineer	TAB Supervisor
Systems Readiness Check	Construction Phase Inspection	Field Readiness Check & Preliminary Field Procedures.

1.4 TAB STANDARD

TAB shall be performed in accordance with the requirements of the standard under which the TAB Firm's qualifications are approved, i.e., AABC MN-1or NEBB Procedural Stds, unless otherwise specified herein. All recommendations and suggested practices contained in the TAB Standard shall be considered mandatory. The provisions of the TAB Standard, including checklists, report forms, etc., shall, as nearly as practical, be used to

satisfy the Contract requirements. The TAB Standard shall be used for all aspects of TAB, including qualifications for the TAB Firm and Specialist and calibration of TAB instruments. Where the instrument manufacturer calibration recommendations are more stringent than those listed in the TAB Standard, the manufacturer's recommendations shall be adhered to. All quality assurance provisions of the TAB Standard such as performance guarantees shall be part of this contract. For systems or system components not covered in the TAB Standard, TAB procedures shall be developed by the TAB Specialist. Where new procedures, requirements, etc., applicable to the Contract requirements have been published or adopted by the body responsible for the TAB Standard used (AABC or NEBB), the requirements and recommendations contained in these procedures and requirements shall be considered mandatory.

1.5 QUALIFICATIONS

1.5.1 TAB Firm

The TAB Firm shall be either a member of AABC or certified by the NEBB and certified in all categories and functions where measurements or performance are specified on the plans and specifications, including building systems commissioning. The certification shall be maintained for the entire duration of duties specified herein. If, for any reason, the firm loses subject certification during this period, the Contractor shall immediately notify the Contracting Officer and submit another TAB Firm for approval. Any firm that has been the subject of disciplinary action by either the AABC or the NEBB within the five years preceding Contract Award shall not be eligible to perform any duties related to the HVAC systems, including TAB. All work specified in this Section and in other related Sections to be performed by the TAB Firm shall be considered invalid if the TAB Firm loses its certification prior to Contract completion and must be performed by an approved successor. These TAB services are to assist the prime Contractor in performing the quality oversight for which it is responsible. The TAB Firm shall be a subcontractor of the prime Contractor, and shall report to and be paid by the prime Contractor.

1.5.2 TAB Specialist

The TAB Specialist shall be either a member of AABC or an experienced technician of the Firm certified by the NEBB. The certification shall be maintained for the entire duration of duties specified herein. If, for any reason, the Specialist loses subject certification during this period, the Contractor shall immediately notify the Contracting Officer and submit another TAB Specialist for approval. Any individual that has been the subject of disciplinary action by either the AABC or the NEBB within the five years preceding Contract Award shall not be eligible to perform any duties related to the HVAC systems, including TAB. All work specified in this Section and in other related Sections performed by the TAB Specialist shall be considered invalid if the TAB Specialist loses its certification prior to Contract completion and must be performed by the approved successor.

1.6 TAB SPECIALIST RESPONSIBILITIES

All TAB work specified herein and in related sections shall be performed under the direct guidance of the TAB Specialist. The TAB Specialist shall participate in the commissioning process specified in Section 15995 COMMISSIONING OF HVAC SYSTEMS.

PART 2 PRODUCTS (Not Applicable)

PART 3 EXECUTION

3.1 DESIGN REVIEW

The TAB Specialist shall review the Contract Plans and Specifications and advise the Contracting Officer of any deficiencies that would prevent the HVAC systems from effectively operating in accordance with the sequence of operation specified or prevent the effective and accurate TAB of the system. The TAB Specialist shall provide a Design Review Report individually listing each deficiency and the corresponding proposed corrective action necessary for proper system operation.

3.2 TAB RELATED HVAC SUBMITTALS

The TAB Specialist shall prepare a list of the submittals from the Contract Submittal Register that relate to the successful accomplishment of all HVAC TAB. The submittals identified on this list shall be accompanied by a letter of approval signed and dated by the TAB Specialist when submitted to the Government. The TAB Specialist shall also ensure that the location and details of ports, terminals, connections, etc., necessary to perform TAB are identified on the submittals.

3.3 TAB SCHEMATIC DRAWINGS AND REPORT FORMS

A schematic drawing showing each system component, including balancing devices, shall be provided for each system. Each drawing shall be accompanied by a copy of all report forms required by the TAB Standard used for that system. Where applicable, the acceptable range of operation or appropriate setting for each component shall be included on the forms or as an attachment to the forms. The schematic drawings shall identify all testing points and cross reference these points to the report forms and procedures.

3.4 DUCTWORK LEAK TESTING

The TAB Specialist shall witness the Ductwork Leak Testing specified in Section 15895 AIR SUPPLY, DISTRIBUTION, VENTILATION, AND EXHAUST SYSTEM and approve the results as specified in Paragraph TAB RELATED HVAC SUBMITTALS.

3.5 TESTING, ADJUSTING, AND BALANCING

3.5.1 TAB Procedures

Step by step procedures for each measurement required during TAB Execution shall be provided. The procedures shall be oriented such that there is a separate section for each system. The procedures shall include measures to ensure that each system performs as specified in all operating modes, interactions with other components (such as exhaust fans, kitchen hoods, fume hoods, relief vents, etc.) and systems, and with all seasonal operating differences, diversity, simulated loads, and pressure relationships required. Air Handling Unit AHU-21 system, including Phase 3 installation, shall be balanced. Phase 3 documents showing design air flows may be obtained from the Contracting Officer.

3.5.2 Systems Readiness Check

The TAB Specialist shall inspect each system to ensure that it is complete,

including installation and operation of controls, and that all aspects of the facility that have any bearing on the HVAC systems, including installation of ceilings, walls, windows, doors, and partitions, are complete to the extent that TAB results will not be affected by any detail or touch-up work remaining. The TAB Specialist shall also verify that all items such as ductwork and piping ports, terminals, connections, etc., necessary to perform TAB shall be complete during the Systems Readiness Check.

3.5.3 Preparation of TAB Report

Preparation of the TAB Report shall begin only when the Systems Readiness Report has been approved. The Report shall be oriented so that there is a separate section for each system. The Report shall include a copy of the appropriate approved Schematic Drawings and TAB Related Submittals, such as pump curves, fan curves, etc., along with the completed report forms for each system. The operating points measured during successful TAB Execution and the theoretical operating points listed in the approved submittals shall be marked on the performance curves and tables. Where possible, adjustments shall be made using an "industry standard" technique which would result in the greatest energy savings, such as adjusting the speed of a fan instead of throttling the flow. Any deficiencies outside of the realm of normal adjustments and balancing during TAB Execution shall be noted along with a description of corrective action performed to bring the measurement into the specified range. If, for any reason, the TAB Specialist determines during TAB Execution that any Contract requirement cannot be met, the TAB Specialist shall immediately provide a written description of the deficiency and the corresponding proposed corrective action necessary for proper system operation to the Contracting Officer.

3.5.4 TAB Verification

The TAB Specialist shall recheck ten percent of the measurements listed in the Tab Report and prepare a TAB Verification Report. The measurements selected for verification and the individuals that witness the verification will be selected by the Contracting Officer's Representative (COR). The measurements will be recorded in the same manner as required for the TAB Report. All measurements that fall outside the acceptable operating range specified shall be accompanied by an explanation as to why the measurement does not correlate with that listed in the TAB Report and a description of corrective action performed to bring the measurement into the specified range. The TAB Specialist shall update the original TAB report to reflect any changes or differences noted in the TAB verification report and submit the updated TAB report. If over 20 percent of the measurements selected by the COR for verification fall outside of the acceptable operating range specified, the COR will select an additional ten percent for verification. If over 20 percent of the total tested (including both test groups) fall outside of the acceptable range, the TAB Report shall be considered invalid and all contract TAB work shall be repeated beginning with the Systems Readiness Check.

3.5.5 Marking of Setting

Following approval of TAB Verification Report, the setting of all HVAC adjustment devices including valves, splitters, and dampers shall be permanently marked by the TAB Specialist so that adjustment can be restored if disturbed at any time.

3.5.6 Identification of Test Ports

The TAB Specialist shall permanently and legibly identify the location points of duct test ports. If the ductwork has exterior insulation, the identification shall be made on the exterior side of the insulation. All penetrations through ductwork and ductwork insulation shall be sealed to prevent air leakage or to maintain integrity of vapor barrier.

-- End of Section --

SECTION TABLE OF CONTENTS

DIVISION 15 - MECHANICAL

SECTION 15995

COMMISSIONING OF HVAC SYSTEMS

01/93

PART 1 GENERAL

1.1 SUBMITTALS
1.2 SEQUENCING AND SCHEDULING

PART 2 PRODUCTS (Not Applicable)

PART 3 EXECUTION

3.1 COMMISSIONING TEAM AND CHECKLISTS
3.2 TESTS
3.2.1 Pre-Commissioning Checks
3.2.2 Functional Performance Tests

-- End of Section Table of Contents --

SECTION 15995

COMMISSIONING OF HVAC SYSTEMS
01/93

PART 1 GENERAL

1.1 SUBMITTALS

Government approval is required for submittals with a "GA" designation; submittals with "FIO" designation are for information only. The following shall be submitted in accordance with Section 01330 SUBMITTAL PROCEDURES:

SD-01 Data

Commissioning Team; FIO.

List of team members who will represent the Contractor in the pre-commissioning checks and functional performance testing, at least 2 weeks prior to the start of pre-commissioning checks. Proposed revision to the list, prior to the start of the impacted work.

SD-06 Instructions

Test Procedures; FIO.

Detailed procedures for pre-commissioning checks and functional performance tests, at least 4 weeks prior to the start of pre-commissioning checks.

SD-07 Schedules

Test Schedule; GA1.

Schedule for pre-commissioning checks and functional performance tests, at least 2 weeks prior to the start of pre-commissioning checks.

SD-09 Reports

Test Reports; GA1.

Completed pre-commissioning checklists and functional performance test checklists organized by system and by subsystem and submitted as one package. The results of failed tests shall be included along with a description of the corrective action taken.

1.2 SEQUENCING AND SCHEDULING

The work described in this Section shall begin only after all work required in related Sections, including Section 15950 HEATING, VENTILATING, AND AIR CONDITIONING (HVAC) CONTROL SYSTEMS and Section 15990 TESTING, ADJUSTING AND BALANCING OF HVAC SYSTEMS, has been successfully completed, and all test and inspection reports and operation and maintenance manuals required in these Sections have been submitted and approved.

PART 2 PRODUCTS (Not Applicable)

PART 3 EXECUTION

3.1 COMMISSIONING TEAM AND CHECKLISTS

The Contractor shall designate team members to participate in the pre-commissioning checks and the functional performance testing specified herein. In addition, the Government will be represented by a representative of the Contracting Officer, the Design Agent's Representative, and the Using Agency. The team members shall be as follows:

Designation	Function
Q	Contractor's Chief Quality Control Representative
M	Contractor's Mechanical Representative
E	Contractor's Electrical Representative
T	Contractor's Testing, Adjusting, and Balancing Representative
C	Contractor's Controls Representative
D	Design Agent's Representative
O	Contracting Officer's Representative
U	Using Agency's Representative

Each checklist shown in appendices A and B shall be completed by the commissioning team. Acceptance by each commissioning team member of each pre-commissioning checklist item shall be indicated by initials and date unless an "X" is shown indicating that participation by that individual is not required. Acceptance by each commissioning team member of each functional performance test checklist shall be indicated by signature and date.

3.2 TESTS

The pre-commissioning checks and functional performance tests shall be performed in a manner which essentially duplicates the checking, testing, and inspection methods established in the related Sections. Where checking, testing, and inspection methods are not specified in other Sections, methods shall be established which will provide the information required. Testing and verification required by this section shall be performed during the Commissioning phase. Requirements in related Sections are independent from the requirements of this Section and shall not be used to satisfy any of the requirements specified in this Section. The Contractor shall provide all materials, services, and labor required to perform the pre-commissioning checks and functional performance tests. A pre-commissioning check or functional performance test shall be aborted if any system deficiency prevents the successful completion of the test or if any participating non-Government commissioning team member of which participation is specified is not present for the test. The Contractor shall reimburse the Government for all costs associated with effort lost due to tests that are aborted. These costs shall include salary, travel costs and per diem (where applicable) for Government commissioning team members.

3.2.1 Pre-Commissioning Checks

Pre-commissioning checks shall be performed for the items indicated on the checklists in Appendix A. Deficiencies discovered during these checks shall be corrected and retested in accordance with the applicable contract requirements.

3.2.2 Functional Performance Tests

Functional performance tests shall be performed for the items indicated on the checklists in Appendix B. Functional performance tests shall begin only after all pre-commissioning checks have been successfully completed. Tests shall prove all modes of the sequences of operation, and shall verify all other relevant contract requirements. Tests shall begin with equipment or components and shall progress through subsystems to complete systems. Upon failure of any functional performance test checklist item, the Contractor shall correct all deficiencies in accordance with the applicable contract requirements. The checklist shall then be repeated until it has been completed with no errors.

APPENDIX A

PRE-COMMISSIONING CHECKLISTS

Pre-commissioning Checklist - Ductwork

For Air Handler: [_____]

Checklist Item	Q	M	E	T	C	D	O	U
Installation								
a. Ductwork complete.	___	___	X	___	X	___	___	___
b. As-built shop drawings submitted.	___	___	X	___	X	___	___	___
c. Ductwork leak test complete.	___	___	X	___	X	___	___	___

NOTE: The first bracketed item d will be used for Army projects, the second for Air Force projects.

[d. Fire dampers, smoke dampers, and access doors installed as required.	___	___	X	___	X	___	___	___]
[d. Fire dampers, smoke dampers, and access doors installed as required with installation of each verified by the specified team members initialing each location on a copy of the as-built drawings.	___	___	X	___	X	___	___	___]
e. Ductwork insulated as required.	___	___	X	___	X	___	___	___
f. Thermometers and gauges installed as required.	___	___	___	___	___	___	___	___
g. Verify open/closed status of dampers.	___	___	X	___	X	___	___	___
h. Verify smoke dampers operation.	___	___	X	___	___	___	___	___
i. Flexible connectors installed as specified	__	___	X	___	X	___	___	___
Testing, Adjusting, and Balancing (TAB)								
a. TAB operation complete.	___	___	X	___	X	___	___	___

Pre-commissioning Checklist - PTAC Unit

For PTAC Unit: [_____]

Checklist Item	Q	M	E	T	C	D	O	U
Installation								
a. Vibration isolation devices installed.	___	___	X	X	X	___	___	___
b. Access doors/removable panels are operable and sealed.	___	___	X	___	X	___	___	___
c. Casing undamaged.	___	___	X	X	X	___	___	___
d. Insulation undamaged.	___	___	X	X	X	___	___	___
e. Condensate drainage is unobstructed.	___	___	X	X	X	___	___	___
f. Fan belt adjusted.	___	___	X	___	X	___	___	___
g. Any damage to coil fins has been repaired.	___	___	X	___	X	___	___	___
h. Manufacturer's required maintenance clearance provided.	___	___	X	X	X	___	___	___
Electrical								
a. Power available to unit disconnect.	___	___	___	X	___	___	___	___
b. Power available to unit control panel.	___	___	___	X	___	___	___	___
c. Proper motor rotation verified.	___	___	___	___	X	___	___	___
d. Verify that power disconnect is located within sight of the unit it controls.	___	___	___	X	___	___	___	___
Controls								
c. Verify proper location and installation of thermostat.	___	___	X	___	___	___	___	___

Pre-commissioning Checklist - Unit Heater

For Unit Heater: [_____]

Checklist Item	Q	M	E	T	C	D	O	U
Installation								
d. Any damage to coil fins has been repaired.	___	___	X	___	X	___	___	___
e. Manufacturer's required maintenance/ operational clearance provided.	___	___	X	X	X	___	___	___
Electrical								
a. Power available to unit disconnect.	___	___	___	X	___	___	___	___
b. Proper motor rotation verified.	___	___	___	X	X	___	___	___
c. Verify that power disconnect is located within sight of the unit it controls.	___	___	___	X	___	___	___	___
d. Power available to electric heating coil.	___	___	___	X	___	___	___	___
Controls								
a. Control valves properly installed.	___	___	X	___	___	___	___	___
b. Control valves operable.	___	___	X	X	___	___	___	___
c. Verify proper location and installation of thermostat.	___	___	X	___	___	___	___	___

Pre-commissioning Checklist - Exhaust Fan

For Exhaust Fan: [_____]

Checklist Item	Q	M	E	T	C	D	O	U
Installation								
a. Fan belt adjusted.	___	___	X	___	X	___	___	___
Electrical								
a. Power available to fan disconnect.	___	___	___	X	___	___	___	___
b. Proper motor rotation verified.	___	___	___	___	X	___	___	___
c. Verify that power disconnect is located within sight of the unit it controls.	___	___	___	X	___	___	___	___
Controls								
a. Control interlocks properly installed.	___	___	___	X	___	___	___	___
b. Control interlocks operable.	___	___	___	X	___	___	___	___
c. Dampers/actuators properly installed.	___	___	X	___	___	___	___	___
d. Dampers/actuators operable.	___	___	X	___	___	___	___	___
e. Verify proper location and installation of thermostat.	___	___	X	___	___	___	___	___
Testing, Adjusting, and Balancing (TAB)								
a. TAB results +10%/-0% to cfm shown on drawings	___	___	X	___	X	___	___	___
b. TAB Report submitted.	___	___	X	___	X	___	___	___

Pre-commissioning Checklist - HVAC System Controls

For HVAC System: [_____]

Checklist Item	Q	M	E	T	C	D	O	U
Installation								
a. As-built shop drawings submitted.	___	___	X	X	___	___	___	___
b. Layout of control panel matches drawings.	___	___	X	X	___	___	___	___
c. Framed instructions mounted in or near control panel.	___	___	X	X	___	___	___	___
d. Components properly labeled (on inside and outside of panel).	___	___	X	X	___	___	___	___
e. Control components piped and/or wired to each labeled terminal strip.	___	___	X	X	___	___	___	___
f. EMCS connection made to each labeled terminal strip as shown.	___	___	X	X	___	___	___	___
g. Control wiring and tubing labeled at all terminations, splices, and junctions.	___	___	X	X	___	___	___	___
h. Shielded wiring used on electronic sensors.	__	__	X	X	___	___	___	___
Main Power and Control Air								
a. 110 volt AC power available to panel.	___	___	___	X	___	___	___	___
Testing, Commissioning, and Balancing								
a. Testing, Commissioning, and Balancing Report submitted.	___	___	X	___	___	___	___	___

APPENDIX B

FUNCTIONAL PERFORMANCE TESTS CHECKLISTS

Functional Performance Test Checklist - PTAC Units

The Contracting Officer will select fan coil units to be spot-checked during the functional performance test.

1. Functional Performance Test: Contractor shall demonstrate operation of selected fan coils as per specifications including the following:

b. Cooling/heating fan coils:

(1) Verify fan coil unit response to room temperature set point adjustment. Changes to be cooling set point to heating set point and return to cooling set point. _____

2. Certification: We the undersigned have witnessed the above functional performance tests and certify that the item tested has met the performance requirements in this section of the specifications.

Signature and Date

Contractor's Chief Quality Control Representative _____

Contractor's Mechanical Representative _____

Contractor's Electrical Representative _____

Contractor's Testing, Adjusting and Balancing Representative _____

Contractor's Controls Representative _____

Contracting Officer's Representative _____

Using Agency's Representative _____

Functional Performance Test Checklist - Unit Heaters

The Contracting Officer will select unit heaters to be spot-checked during the functional performance test.

1. Functional Performance Test: Contractor shall demonstrate operation of selected unit heaters as per specifications including the following:

a. Verify unit heater response to room temperature set point adjustment. Changes to be heating set point to heating set point minus 10 degrees and return to heating set point. _____

b. Check blower fan speed. _____rpm

c. Check heating mode inlet air temperature. Check heating mode inlet air temperature. _____ degrees F

d. Check heating mode outlet air temperature. Check heating mode outlet air temperature. _____ degrees F

2. Certification: We the undersigned have witnessed the above functional performance tests and certify that the item tested has met the performance requirements in this section of the specifications.

Signature and Date

Contractor's Chief Quality Control Representative _____

Contractor's Mechanical Representative _____

Contractor's Electrical Representative _____

Contractor's Testing, Adjusting and Balancing Representative _____

Contractor's Controls Representative _____

Contracting Officer's Representative _____

Using Agency's Representative _____

Functional Performance Test Checklist - HVAC Controls

For HVAC System: [_____]

The Contracting Officer will select HVAC control systems to undergo functional performance testing.

1. Functional Performance Test: Contractor shall verify operation of HVAC controls by performing the following tests:

a. Verify that controller is maintaining the set point by manually measuring the controlled variable with a thermometer, sling psychrometer, inclined manometer, etc.

b. Verify sensor/controller combination by manually measuring the controlled medium. Take readings from control panel display and compare readings taken manually. Record all readings.

Sensor _____
Manual measurement _____
Panel reading value _____

c. Verify system stability by changing the controller set point as follows:

(1) Air temperature - 10 degrees F

(2) Water temperature - 10 degrees F

(3) Static pressure - 10 percent of set point

(4) Relative humidity - percent (RH)

The control system shall be observed for 10 minutes after the change in set point. Instability or excessive hunting will be unacceptable.

d. Verify interlock with other HVAC controls.

e. Verify interlock with fire alarm control panel.

f. Verify interlock with EMCS.

g. Change controller set point 10 percent with EMCS and verify correct response.

2. Verify that operation of control system conforms to that specified in the sequence of operation.

3. Certification: We the undersigned have witnessed the above functional performance tests and certify that the item tested has met the performance requirements in this section of the specifications.

Signature and Date

Contractor's Chief Quality Control Representative _____

Contractor's Mechanical Representative _____

Functional Performance Test Checklist - HVAC Controls

For HVAC System: [_____]

Contractor's Electrical Representative _____

Contractor's Testing, Adjusting and Balancing Representative _____

Contractor's Controls Representative _____

Contractor's Officer's Representative _____

Using Agency's Representative _____

-- End of Section --

SECTION TABLE OF CONTENTS

DIVISION 16 - ELECTRICAL

SECTION 16120

INSULATED WIRE AND CABLE

11/91

PART 1 GENERAL

1.1 REFERENCES
1.2 SUBMITTALS
1.3 DELIVERY, STORAGE, AND HANDLING
1.4 PROJECT/SITE CONDITIONS

PART 2 PRODUCTS

2.1 MATERIALS
2.1.1 Wire Table
2.1.2 Rated Circuit Voltages
2.1.3 Conductors
2.1.3.1 Material
2.1.3.2 Size
2.1.3.3 Stranding
2.1.3.4 Conductor Shielding
2.1.3.5 Separator Tape
2.1.4 Insulation
2.1.4.1 Insulation Material
2.1.4.2 Insulation Thickness
2.1.4.3 Insulation Shielding
2.1.5 Jackets
2.1.5.1 Jacket Material
2.1.5.2 Jacket Thickness
2.1.6 Not Used
2.1.7 Identification
2.1.7.1 Color-coding
2.1.7.2 Not Used
2.1.8 Cabling
2.1.9 Dimensional Tolerance
2.2 INSTALLATION INSTRUCTIONS
2.3 TESTS, INSPECTIONS, AND VERIFICATIONS
2.3.1 Cable Data
2.3.2 Inspection and Tests
2.3.2.1 High-Voltage Test Source
2.3.2.2 Not Used
2.3.2.3 Flame Tests
2.3.2.4 Independent Tests
2.3.2.5 Reports

PART 3 EXECUTION (Not Applicable)

-- End of Section Table of Contents --

SECTION 16120

INSULATED WIRE AND CABLE
11/91

PART 1 GENERAL

1.1 REFERENCES

The publications listed below form a part of this specification to the extent referenced. The publications are referred to in the text by basic designation only.

ASSOCIATION OF EDISON ILLUMINATING COMPANIES (AEIC)

AEIC CS5	(Oct 1987; 9th Ed) Thermoplastic and Crosslinked Polyethylene Insulated Shielded Power Cables Rated 5 Through 35 kV
AEIC CS6	(Oct 1987; 5th Ed; Rev Mar 1989) Ethylene Propylene Insulated Shielded Power Cables Rated 5 Through 69 kV

INSTITUTE OF ELECTRICAL AND ELECTRONICS ENGINEERS (IEEE)

IEEE Std 383	(1974; R 1992) Class 1E Electric Cables, Field Splices, and Connections for Nuclear Power Generating Stations

NATIONAL ELECTRICAL MANUFACTURERS ASSOCIATION (NEMA)

NEMA WC 7	(1988) Cross-Linked-Thermosetting-Polyethylene-Insulated Wire and Cable for the Transmission and Distribution of Electrical Energy
NEMA WC 8	(1988) Ethylene-Propylene-Rubber-Insulated Wire and Cable for the Transmission and Distribution of Electrical Energy

1.2 SUBMITTALS

Government approval is required for all submittals with a "GA" designation; submittals having an "FIO" designation are for information only. The following shall be submitted in accordance with Section 01330 SUBMITTAL PROCEDURES:

SD-01 Data

Installation Instructions; FIO.

The Contractor shall submit cable manufacturing data.

SD-09 Reports

Tests, Inspections, and Verifications; FIO.

Six certified copies of test reports shall be submitted by the contractor.

1.3 DELIVERY, STORAGE, AND HANDLING

Furnish cables on reels or coils. Each cable and the outside of each reel or coil, shall be plainly marked or tagged to indicate the cable length, voltage rating, conductor size, and manufacturer's lot number and reel number. Each coil or reel of cable shall contain only one continuous cable without splices. Cables for exclusively dc applications, as specified in paragraph HIGH VOLTAGE TEST SOURCE, shall be identified as such. Shielded cables rated 2,001 volts and above and shall be reeled and marked in accordance with Section I of AEIC CS5 or AEIC CS6, as applicable. Reels shall remain the property of the Contractor.

1.4 PROJECT/SITE CONDITIONS

PART 2 PRODUCTS

2.1 MATERIALS

2.1.1 Wire Table

Wire and cable shall be furnished in accordance with the requirements of the wire table below, and shall conform to the detailed requirements specified herein.

2.1.2 Rated Circuit Voltages

All wire and cable shall have minimum rated circuit voltages in accordance with Table 3-1 of NEMA WC 7 or NEMA WC 8.

2.1.3 Conductors

2.1.3.1 Material

Conductors shall conform to all the applicable requirements of Section 2 of NEMA WC 7 or Part 2 of NEMA WC 8 as applicable and shall be annealed copper. Copper conductors may be bare, or tin- or lead-alloy-coated, if required by the type of insulation used.

2.1.3.2 Size

Minimum wire size shall be No. 12 AWG for power and lighting circuits; No. 10 AWG for current transformer secondary circuits; No. 14 AWG for potential transformer, relaying, and control circuits; No. 16 AWG for annunciator circuits; and No. 19 AWG for alarm circuits. Minimum wire sizes for rated circuit voltages of 2,001 volts and above shall not be less than those listed for the applicable voltage in Table 3-1 of Section 3 of NEMA WC 7 or Part 3 of NEMA WC 8, as applicable.

2.1.3.3 Stranding

Conductor stranding classes cited herein shall be as defined in Appendix L of NEMA WC 7 or NEMA WC 8, as applicable. Lighting conductors No. 10 AWG and smaller shall be solid or have Class B stranding. Any conductors used between stationary and moving devices, such as hinged doors or panels, shall have Class H or K stranding. All other conductors shall have Class B or C stranding, except that conductors shown on the drawings, or in the

schedule, as No. 12 AWG may be 19 strands of No. 25 AWG, and conductors shown as No. 10 AWG may be 19 strands of No. 22 AWG.

2.1.3.4 Conductor Shielding

Conductor shielding conforming to paragraph 2.7 of NEMA WC 7 or NEMA WC 8, as applicable, shall be used on power cables having a rated circuit voltage above 2,000 volts. In addition, conductor shielding for shielded cables shall also comply with Section C of AEIC CS5 or AEIC CS6. Strict precautions shall be taken after application of the conductor shielding to prevent the inclusion of voids or contamination between the conductor shielding and the subsequently applied insulation.

2.1.3.5 Separator Tape

Where conductor shielding, strand filling, or other special conductor treatment is not required, a separator tape between conductor and insulation is permitted.

2.1.4 Insulation

2.1.4.1 Insulation Material

Insulation shall be cross-linked thermosetting polyethylene (XLPE) type, meeting the requirements of Section 3 or paragraph 7.7 of NEMA WC 7 as applicable, or an ethylene-propylene rubber (EPR) type meeting the requirements of Part 3 of NEMA WC 8. For shielded cables of rated circuit voltages above 2,000 volts, the following provisions shall also apply:

a. XLPE, if used, shall be tree-retardant.

b. Insulation shall be chemically bonded to conductor shielding.

c. The insulation material and its manufacturing, handling, extrusion and vulcanizing processes, shall all be subject to strict procedures to prevent the inclusion of voids, contamination, or other irregularities on or in the insulation. Insulation material shall be inspected for voids and contaminants. Inspection methods, and maximum allowable void and contaminant content shall be in accordance with Section B of AEIC CS5 or AEIC CS6, as applicable.

d. Cables with repaired insulation defects discovered during factory testing, or with splices or insulation joints, are not acceptable [unless specifically approved].

2.1.4.2 Insulation Thickness

The insulation thickness for each conductor shall be based on its rated circuit voltage.

a. Power Cables/Single-Conductor Control Cables, 2,000 Volts and Below - The insulation thickness for single-conductor cables rated 2,000 volts and below shall be as required by Table 3-1, Section 3 of NEMA WC 7 or Table 3-1, Part 3, of NEMA WC 8, as applicable. Column "A" thickness of Table 3-1 of NEMA WC 7will be permitted only for single-conductor cross-linked thermosetting polyethylene insulated cables without a jacket. NEMA WC 8 ethylene-propylene rubber-insulated conductors shall have a jacket. Column "B" thickness shall apply to single-conductor cables that require a jacket and to individual

conductors of multiple-conductor cables with an overall jacket.

b. Power Cables, Rated 2,001 Volts and Above - Thickness of insulation for power cables rated 2,001 volts and above shall be in accordance with the following:

(1) Non-shielded cables, 2,001 to 5,000 volts, shall comply with Note 3 to Table 3-1, of either NEMA WC 7 or NEMA WC 8, as applicable.

(2) Shielded cables rated 2,001 volts and above shall comply with Column B of Table B1, of AEIC CS5 or AEIC CS6, as applicable.

c. Multiple-Conductor Control Cables - The insulation thickness of multiple-conductor cables used for control and related purposes shall be as required by Table 7-32 of NEMA WC 7 or Table 7.5.1 of NEMA WC 8 as applicable.

2.1.4.3 Insulation Shielding

Unless otherwise specified, insulation shielding shall be provided for conductors having rated circuit voltages of 2,001 volts and above. The voltage limits above which insulation shielding is required, and the material requirements, are given in Section 4 of NEMA WC 7 or Part 4 of NEMA WC 8, as applicable. The material, if thermosetting, shall meet the wafer boil test requirements as described in Section D of AEIC CS5 or AEIC CS6, as applicable. The method of shielding shall be in accordance with the current practice of the industry; however, the application process shall include strict precautions to prevent voids or contamination between the insulation and the nonmetallic component. Voids, protrusions, and indentations of the shield shall not exceed the maximum allowances specified in Section C of AEIC CS5 or AEIC CS6, as applicable. The cable shall be capable of operating without damage or excessive temperature when the shield is grounded at both ends of each conductor. All components of the shielding system shall remain tightly applied to the components they enclose after handling and installation in accordance with the manufacturer's recommendations. Shielding systems which require heat to remove will not be permitted unless specifically approved.

2.1.5 Jackets

All cables shall have jackets meeting the requirements of Section 4 of NEMA WC 7, or Part 4 of NEMA WC 8, as applicable, and as specified herein. Individual conductors of multiple-conductor cables shall be required to have jackets only if they are necessary for the conductor to meet other specifications herein. Jackets of single-conductor cables and of individual conductors of multiple-conductor cables, except for shielded cables, shall be in direct contact and adhere or be vulcanized to the conductor insulation. Multiple-conductor cables and shielded single-conductor cables shall be provided with a common overall jacket, which shall be tightly and concentrically formed around the core. Repaired jacket defects found and corrected during manufacturing are permitted if the cable, including jacket, afterward fully meets these specifications and the requirements of the applicable standards.

2.1.5.1 Jacket Material

The jacket shall be one of the materials listed below. Variations from the materials required below will be permitted only if approved for each

specific use, upon submittal of sufficient data to prove that they exceed all specified requirements for the particular application.

a. General Use

(1) Heavy-duty black neoprene (NEMA WC 8, paragraph 4.4.3).

(2) Heavy-duty chlorosulfonated polyethylene (NEMA WC 8, paragraph 4.4.10).

(3) Heavy-duty cross-linked (thermoset) chlorinated polyethylene (NEMA WC 8, paragraph 4.4.11).

b. Accessible Use Only, 2,000 Volts or Less - Cables installed where they are entirely accessible, such as cable trays and raceways with removable covers, or where they pass through less than 10 feet of exposed conduit only, shall have jackets of one of the materials specified in above paragraph GENERAL USE, or the jackets may be of one of the following:

(1) General-purpose neoprene (NEMA WC 8, paragraph 4.4.4).

(2) Black polyethylene (NEMA WC 8, paragraph 4.4.6).

(3) Thermoplastic chlorinated polyethylene (NEMA WC 8, paragraph 4.4.7).

2.1.5.2 Jacket Thickness

The minimum thickness of the jackets at any point shall be not less than 80 percent of the respective nominal thicknesses specified below.

a. Multiple-Conductor Cables - Thickness of the jackets of the individual conductors of multiple-conductor cables shall be as required by Section 4, Table 4-6 of NEMA WC 7 or Part 4, Table 4-4 of NEMA WC 8, and shall be in addition to the conductor insulation thickness required by Column B of Table 3-1 of the applicable NEMA publication for the insulation used. Thickness of the outer jackets or sheaths of the assembled multiple-conductor cables shall be as required by Section 4, Table 4-7, of NEMA WC 7 or Part 4, Table 4-5, of NEMA WC 8.

b. Single-Conductor Cables - Single-conductor cables, if nonshielded, shall have a jacket thickness as specified in Section 4, Table 4-4 of NEMA WC 7 or Part 4, Table 4-2 of NEMA WC 8. If shielded, the jacket thickness shall be in accordance with the requirements of Section 4, Table 4-5 of NEMA WC 7 or Part 4, Table 4-3 of NEMA WC 8.

2.1.6 Not Used2.1.7 Identification

2.1.7.1 Color-coding

Insulation of individual conductors of multiple-conductor cables shall be color-coded in accordance with paragraph 5.3 of NEMA WC 8, except that colored braids will not be permitted. Only one color-code method shall be used for each cable construction type. Control cable color-coding shall be in accordance with Table 5-2 of NEMA WC 8. Power cable color-coding shall be black for Phase A, red for Phase B, blue for Phase C, white for grounded neutral, and green for an insulated grounding conductor, if included.

2.1.7.2 Not Used

2.1.8 Cabling

Individual conductors of multiple-conductor cables shall be assembled with flame-and moisture-resistant fillers, binders, and a lay conforming to Part 5 of NEMA WC 8, except that flat twin cables will not be permitted. Fillers shall be used in the interstices of multiple-conductor round cables with a common covering where necessary to give the completed cable a substantially circular cross section. Fillers shall be non-hygroscopic material, compatible with the cable insulation, jacket, and other components of the cable. The rubber-filled or other approved type of binding tape shall consist of a material that is compatible with the other components of the cable and shall be lapped at least 10 percent of its width.

2.1.9 Dimensional Tolerance

The outside diameters of single-conductor cables and of multiple-conductor cables shall not vary more than 5 percent and 10 percent, respectively, from the manufacturer's published catalog data.

2.2 INSTALLATION INSTRUCTIONS

The following information shall be provided by the cable manufacturer for each size, conductor quantity, and type of cable furnished:

a. Minimum bending radius, in inches - For multiple-conductor cables, this information shall be provided for both the individual conductors and the multiple-conductor cable.

b. Pulling tension and sidewall pressure limits, in pounds.

c. Instructions for stripping semiconducting insulation shields, if furnished, with minimum effort without damaging the insulation.

d. Upon request, compatibility of cable materials and construction with specific materials and hardware manufactured by others shall be stated. Also, if requested, recommendations shall be provided for various cable operations, including installing, splicing, terminating, etc.

2.3 TESTS, INSPECTIONS, AND VERIFICATIONS

2.3.1 Cable Data

Manufacture of the wire and cable shall not be started until all materials to be used in the fabrication of the finished wire or cable have been approved by the Contracting Officer. Cable data shall be submitted for approval including dimensioned sketches showing cable construction, and sufficient additional data to show that these specifications will be satisfied.

2.3.2 Inspection and Tests

Inspection and tests of wire and cable furnished under these specifications shall be made by and at the plant of the manufacturer, and shall be witnessed by the Contracting Officer or his authorized representative, unless waived in writing. The Government may perform further tests before

or after installation. Testing in general shall comply with Section 6 of NEMA WC 7 or Part 6 of NEMA WC 8. Specific tests required for particular materials, components, and completed cables shall be as specified in the sections of the above standards applicable to those materials, components, and cable types. Tests shall also be performed in accordance with the additional requirements specified below.

2.3.2.1 High-Voltage Test Source

Where the applicable standards allow a choice, high-voltage tests for cables to be used exclusively on dc circuits shall be made with dc test voltages. Cables to be used exclusively on ac circuits shall be tested with ac test voltages. If both ac and dc will be present, on either the same or separate conductors of the cable, ac test voltages shall be used.

2.3.2.2 Not Used

2.3.2.3 Flame Tests

All multiple-conductor and single-conductor cable assemblies shall pass IEEE Std 383 flame tests, paragraph 2.5, using the ribbon gas burner. Single-conductor cables and individual conductors of multiple-conductor cables shall pass the flame test of NEMA WC 7, paragraph 7.7.3.1.3. If such tests, however, have previously been made on identical cables, these tests need not be repeated. Instead, certified reports of the original qualifying tests shall be submitted. In this case the reports furnished under paragraph REPORTS, shall verify that all of each cable's materials, construction, and dimensions are the same as those in the qualifying tests.

2.3.2.4 Independent Tests

The Government may at any time make visual inspections, continuity or resistance checks, insulation resistance readings, power factor tests, or dc high-potential tests at field test values. A cable's failure to pass these tests and inspections, or failure to produce readings consistent with acceptable values for the application, will be grounds for rejection of the cable.

2.3.2.5 Reports

Results of tests made shall be furnished. No wire or cable shall be shipped until authorized. Lot number and reel or coil number of wire and cable tested shall be indicated on the test reports.

PART 3 EXECUTION (Not Applicable)

WIRE TABLE

Item No.	Size, AWG or kcmil	No. of Conds.	Rated Circuit Voltage	Stranding	Comments	Quantity lin. ft.
01	#2CU	3	15kV	7	Match Existing	See Drawings

Class ___ stranding may be substituted for ___ where indicated by "*".

-- End of Section --

This page was intentionally left blank for duplex printing.

SECTION TABLE OF CONTENTS

DIVISION 16 - ELECTRICAL

SECTION 16403

SWITCHBOARDS AND PANELBOARDS

08/95

PART 1 GENERAL

1.1 REFERENCES
1.2 SYSTEM DESCRIPTION
1.2.1 Rules
1.2.2 Coordination
1.2.3 Standard Products
1.2.4 Nameplates
1.3 SUBMITTALS
1.4 DELIVERY, STORAGE, AND HANDLING
1.5 MAINTENANCE
1.5.1 Accessories and Tools

PART 2 PRODUCTS

2.1 CONNECTIONS
2.2 MOLDED CASE CIRCUIT BREAKERS
2.2.1 Trip Units
2.2.2 Not Used
2.2.3 120/208-Volt AC Circuits
2.2.4 Not Used
2.3 WIRING
2.4 TERMINAL BLOCKS
2.4.1 Types of Terminal Blocks
2.4.1.1 Short-Circuiting Type
2.4.1.2 Load Type
2.4.2 Marking Strips
2.5 Not Used
2.6 Not Used
2.7 SWITCHBOARDS
2.7.1 Not Used
2.7.2 Not Used
2.7.3 Not Used
2.7.4 Components
2.8 PANELBOARDS
2.8.1 Enclosure
2.8.2 Buses
2.8.3 Components
2.9 PAINTING
2.10 FACTORY TESTS
2.10.1 Not Used
2.10.2 Not Used
2.10.3 Panelboards Tests

-- End of Section Table of Contents --

SECTION 16403

SWITCHBOARDS AND PANELBOARDS
08/95

PART 1 GENERAL

1.1 REFERENCES

The publications listed below form a part of this specification to the extent referenced. The publications are referred to in the text by basic designation only.

AMERICAN SOCIETY FOR TESTING AND MATERIALS (ASTM)

ASTM B 187	(1994) Copper Bar, Bus Bar, Rod and Shapes
ASTM B 317	(1992a) Aluminum-Alloy Extruded Bar, Rod, Tube, Pipe, and Structural Shapes for Electrical Purposes (Bus Conductor)

ASME INTERNATIONAL (ASME)

ASME B1.1	(1989) Unified Inch Screw Threads (UN and UNR Thread Form)
ASME B1.20.1	(1983; R 1992) Pipe Threads, General Purpose (Inch)

NATIONAL ELECTRICAL MANUFACTURERS ASSOCIATION (NEMA)

NEMA AB 1	(1993) Molded Case Circuit Breakers and Molded Case Switches
NEMA ICS 1	(1993) Industrial Control and Systems
NEMA PB 1	(1990) Panelboards
NEMA PB 2	(1989) Deadfront Distribution Switchboards

NATIONAL FIRE PROTECTION ASSOCIATION (NFPA)

NFPA 70	(1993) National Electrical Code

UNDERWRITERS LABORATORIES (UL)

UL 44	(1991; Rev thru Jan 1995) Rubber-Insulated Wires and Cables
UL 50	(1992) Enclosures for Electrical Equipment
UL 67	(1993; Rev thru May 1994) Panelboards
UL 489	(1991; Rev thru Dec 1994) Molded Case Circuit Breakers and Circuit Breaker Enclosures

UL 891	(1994; Rev thru Jan 1995) Dead-Front Switchboards
UL 1063	(1993; Rev thru Oct 1994) Machine-Tool Wires and Cables

1.2 SYSTEM DESCRIPTION

These specifications include the design, fabrication, assembly, wiring, testing, and delivery of the items of equipment and accessories and spare parts listed in the Schedule and shown on the drawings.

1.2.1 Rules

The equipment shall conform to the requirements of NFPA 70 unless more stringent requirements are indicated herein or shown. NEMA rated and UL listed equipment has been specified when available. Equipment must meet NEMA and UL construction and rating requirements as specified. No equivalent will be acceptable. The contractor shall immediately notify the Contracting Officer of any requirements of the specifications or contractor proposed materials or assemblies that do not comply with UL or NEMA. International Electrotechnical Commission (IEC) rated equipment will not be considered an acceptable alternative to specified NEMA ratings.

1.2.2 Coordination

The general arrangement of the motor control centers, switchboards and panelboards is shown on the contract drawings. Any modifications of the equipment arrangement or device requirements as shown on the drawings shall be subject to the approval of the Contracting Officer. If any conflicts occur necessitating departures from the drawings, details of and reasons for departures shall be submitted and approved prior to implementing any change. All equipment shall be completely assembled at the factory. The motor control centers and switchboards may be disassembled into sections, if necessary, for convenience of handling, shipping, and installation.

1.2.3 Standard Products

Material and equipment shall be standard products of a manufacturer regularly engaged in their manufacture and shall essentially duplicate items that have been in satisfactory use for at least 2 years prior to bid opening. All materials shall conform to the requirements of these specifications. Materials shall be of high quality, free from defects and imperfections, of recent manufacture, and of the classification and grades designated. All materials, supplies, and articles not manufactured by the Contractor shall be the products of other recognized reputable manufacturers. If the Contractor desires for any reason to deviate from the standards designated in these specifications, he shall, after award, submit a statement of the exact nature of the deviation, and shall submit, for the approval of the Contracting Officer, complete specifications for the materials which he proposes to use.

1.2.4 Nameplates

Nameplates shall be made of laminated sheet plastic or of anodized aluminum approximately 4 millimeters (1/8 inch) thick, engraved to provide white letters on a black background. The nameplates shall be fastened to the panels in proper positions with anodized round-head screws. Lettering shall be minimum 15 millimeters (1/2 inch) high. Nameplate designations

shall be in accordance with lists on the drawings, and as a minimum shall be provided for the following equipment:

a. Switchboards

b. Group-mounted circuit breakers in Switchboard

c. Panelboards

d. Individually-mounted circuit breakers in Panelboard

Equipment of the withdrawal type shall be provided with nameplates mounted on the removable equipment in locations visible when the equipment is in place.

1.3 SUBMITTALS

Government approval is required for submittals with a "G" designation. Equipment, materials, and articles installed or used without such approval shall be at the risk of subsequent rejection. Submittals not having a "G" designation are for information only. The following shall be submitted in accordance with the Contract Data Requirements List, DD Form 1423:

SD-01 Data

Equipment; G.

The Contractor shall within 30 calendar days after date of award submit for approval six (6) copies of such descriptive cuts and information as are required to demonstrate fully that all parts of the equipment will conform to the requirements and intent of the specifications. Data shall include descriptive data showing typical construction of the types of equipment proposed, including the manufacturer's name, type of molded case circuit breakers or motor circuit protectors, performance capacities and other information pertaining to the equipment. Six (6) sets of characteristic curves of the individual breaker trip element shall be submitted.

SD-04 Drawings

Outline Drawings; G.

The Contractor shall, within 30 calendar days after date of award, submit for the approval of the Contracting Officer six (6) copies of outline drawings of all equipment to be furnished under this contract, together with weights and overall dimensions. Drawings shall show the general arrangement and overall dimensions of the motor control centers, switchboards, and panelboards. These drawings shall show space requirements, details of any floor supports to be embedded in concrete and provisions for conduits for external cables.

Switchboards; G-AE. Panelboards; G-AE.

The Contractor shall, within 30 calendar days after date of award, submit for the approval of the Contracting Officer six (6) copies of electrical equipment drawings. A single-line diagram, equipment list and nameplate schedule shall be provided for each switchboard and panelboard.

SD-08 Statements

Factory Tests.

The Contractor shall submit, within a minimum of 14 days prior to the proposed date of tests, six (6) copies of manufacturer's routine factory test procedures and production line tests for all motor control centers and switchboards.

SD-09 Reports

Factory Tests.

The Contractor shall submit six (6) complete reproducible copies of the factory inspection results and six (6) complete reproducible copies of the factory test results in booklet form, including all plotted data curves, all test conditions, a listing of test equipment complete with calibration certifications, and all measurements taken. Report shall be signed and dated by the Contractor's and Contracting Officer's Representatives.

1.4 DELIVERY, STORAGE, AND HANDLING

The equipment shall be shipped as completely assembled and wired as feasible so as to require a minimum of installation work. Each shipping section shall be properly match marked to facilitate reassembly, and shall be provided with removable lifting channels with eye bolts for attachment of crane slings to facilitate lifting and handling. Any relay or other device which cannot withstand the hazards of shipment when mounted in place on the equipment shall be carefully packed and shipped separately. These devices shall be marked with the number of the panel which they are to be mounted on and fully identified. All finished painted surfaces and metal work shall be wrapped suitably or otherwise protected from damage during shipment. All parts shall be prepared for shipment so that slings for handling may be attached readily while the parts are in a railway car or transport truck. Sections of equipment crated for shipment shall be of such size, including crates, that they will pass through a 1-meter by 2-meter hatch opening and a 2-meter by 2-meter wall opening. All spare parts and accessories shall be carefully packaged and clearly marked.

1.5 MAINTENANCE

1.5.1 Accessories and Tools

A complete set of accessories and special tools unique to equipment provided and required for erecting, handling, dismantling, testing and maintaining the apparatus shall be furnished by the Contractor.

PART 2 PRODUCTS

2.1 CONNECTIONS

All bolts, studs, machine screws, nuts, and tapped holes shall be in accordance with ASME B1.1. The sizes and threads of all conduit and fittings, tubing and fittings, and connecting equipment shall be in accordance with ASME B1.20.1. All ferrous fasteners shall have rust-resistant finish and all bolts and screws shall be equipped with approved locking devices. Manufacturer's standard threads and construction may be used on small items which, in the opinion of the Contracting

Officer, are integrally replaceable, except that threads for external connections to these items shall meet the above requirements.

2.2 MOLDED CASE CIRCUIT BREAKERS

Molded case circuit breakers shall conform to the applicable requirements of NEMA AB 1 and UL 489. The circuit breakers shall be manually-operated, shall be quick-make, quick-break, common trip type, and shall be of automatic-trip type unless otherwise specified or indicated on the drawings. All poles of each breaker shall be operated simultaneously by means of a common handle. The operating handles shall clearly indicate whether the breakers are in "On," "Off," or "Tripped" position and shall have provisions for padlocking in the "Off" position. Personnel safety line terminal shields shall be provided for each breaker. The circuit breakers shall be products of only one manufacturer, and shall be interchangeable when of the same frame size.

2.2.1 Trip Units

Except as otherwise noted, the circuit breakers, of frame sizes and the trip unit ratings as shown on the drawings, shall be provided with combination thermal and instantaneous magnetic or solid state trip units. The Government reserves the right to change the indicated trip ratings, within frame limits, of the trip devices at the time the shop drawings are submitted for approval. The breaker trip units shall be interchangeable and the instantaneous magnetic trip units shall be adjustable on frame sizes larger than 150 amperes. Nonadjustable instantaneous magnetic trip units shall be set at approximately 10 times the continuous current ratings of the circuit breakers. Solid state trip units, where indicated, shall also have adjustable, long time pick-up and delay,short time pick-up and delay.

2.2.2 Not Used

2.2.3 120/208-Volt AC Circuits

Circuit breakers for 120-volt ac circuits shall be rated not less than 120/208 or 240 volts ac, and shall have a UL listed minimum interrupting capacity of 10,000 symmetrical amperes.

2.2.4 Not Used

2.3 WIRING

All control wire shall be stranded tinned copper switchboard wire with 600-volt flame-retardant insulation Type SIS meeting UL 44 or Type MTW meeting UL 1063, and shall pass the VW-1 flame tests included in those standards. Hinge wire shall have Class K stranding. Current transformer secondary leads shall be not smaller than No. 10 AWG. The minimum size of control wire shall be No. 14 AWG. Power wiring for 480-volt circuits and below shall be of the same type as control wiring and the minimum size shall be No. 12 AWG. Special attention shall be given to wiring and terminal arrangement on the terminal blocks to permit the individual conductors of each external cable to be terminated on adjacent terminal points.

2.4 TERMINAL BLOCKS

Control circuit terminal blocks for control wiring shall be molded or

fabricated type with barriers, rated not less than 600 volts. The terminals shall be removable binding, fillister or washer head screw type, or of the stud type with contact and locking nuts. The terminals shall be not less than No. 10 in size and shall have sufficient length and space for connecting at least two indented terminals for 10 AWG conductors to each terminal. The terminal arrangement shall be subject to the approval of the Contracting Officer and not less than four (4) spare terminals or 10 percent, whichever is greater, shall be provided on each block or group of blocks. Modular, pull apart, terminal blocks will be acceptable provided they are of the channel or rail-mounted type. The Contractor shall submit data showing that the proposed alternate will accommodate the specified number of wires, are of adequate current-carrying capacity, and are constructed to assure positive contact between current-carrying parts.

2.4.1 Types of Terminal Blocks

2.4.1.1 Short-Circuiting Type

Short-circuiting type terminal blocks shall be furnished for all current transformer secondary leads and shall have provision for shorting together all leads from each current transformer without first opening any circuit. Terminal blocks shall meet the requirements of paragraph CONTROL CIRCUIT TERMINAL BLOCKS above.

2.4.1.2 Load Type

Load terminal blocks rated not less than 600 volts and of adequate capacity shall be provided for the conductors for NEMA Size 3 and smaller motor controllers and for other power circuits except those for feeder tap units. The terminals shall be of either the stud type with contact nuts and locking nuts or of the removable screw type, having length and space for at least two indented terminals of the size required on the conductors to be terminated. For conductors rated more than 50 amperes, screws shall have hexagonal heads. Conducting parts between connected terminals shall have adequate contact surface and cross-section to operate without overheating. Each connected terminal shall have the circuit designation or wire number placed on or near the terminal in permanent contrasting color.

2.4.2 Marking Strips

White or other light-colored plastic marking strips, fastened by screws to each terminal block, shall be provided for wire designations. The wire numbers shall be made with permanent ink. The marking strips shall be reversible to permit marking both sides, or two marking strips shall be furnished with each block. Marking strips shall accommodate the two sets of wire numbers. Each device to which a connection is made shall be assigned a device designation in accordance with NEMA ICS 1 and each device terminal to which a connection is made shall be marked with a distinct terminal marking corresponding to the wire designation used on the Contractor's schematic and connection diagrams. The wire (terminal point) designations used on the Contractor's wiring diagrams and printed on terminal block marking strips may be according to the Contractor's standard practice; however, additional wire and cable designations for identification of remote (external) circuits shall be provided for the Government's wire designations. Prints of drawings submitted for approval will be so marked and returned to the Contractor for addition of the designations to the terminal strips and tracings, along with any rearrangement of points required.

2.5 Not Used

2.6 Not Used

2.7 SWITCHBOARDS

The switchboards shall be dead-front switchboards conforming to NEMA PB 2 and labeled under UL 891. The switchboards shall be completely enclosed self-supporting metal structures with the required number of vertical panel sections, buses, solid-state trip main circuit breaker,molded-case feeder circuit breakers, and other devices as shown on the drawings. Switchboards shall be fully rated for a short-circuit current of 42,000 symmetrical amperes RMS AC.

2.7.1 Not Used

2.7.2 Not Used

2.7.3 Not Used

2.7.4 Components

Each switchboard shall be equipped with solid-state trip main circuit breaker, molded-case feeder circuit breakers conforming to paragraph MOLDED CASE CIRCUIT BREAKERS and with frame sizes, trip ratings, and terminal connectors for attachment of outgoing power cables as shown on the drawings. The circuit breakers shall be individually stationary mounted, as shown on the drawings, and shall be operable and removable from the front. Where shown on the drawings, circuit breakers shall be enclosed in individual compartments. The group-mounted circuit breakers shall be provided complete with bus work in an integrated assembly on the switchboard and shall conform to the applicable requirements of paragraph PANELBOARDS.

2.8 PANELBOARDS

Panelboards shall consist of assemblies of molded-case circuit breakers with buses and terminal lugs for the control and protection of branch circuits to motors, heating devices and other equipment operating at 240 volts ac or less. Panelboards shall be UL 67 labeled. "Loadcenter" type panels are not acceptable. Panelboards shall be designed for installation in surface-mounted or flush-mounted cabinets accessible from the front only, as shown on the drawings. Panelboards shall be fully rated for a short-circuit current of 10,000 symmetrical amperes RMS ac.

2.8.1 Enclosure

Enclosures shall meet the requirements of UL 50. All cabinets shall be fabricated from sheet steel of not less than 3.5 millimeters (No. 10 gage) if flush-mounted or mounted outdoors, and not less than 2.7 millimeters (No. 12 gage) if surface-mounted indoors, with full seam-welded box ends. Cabinets mounted outdoors or flush-mounted shall be hot-dipped galvanized after fabrication. Cabinets shall be painted in accordance with paragraph

PAINTING. Outdoor cabinets shall be of NEMA 3R raintight. Front edges of cabinets shall be form-flanged or fitted with structural shapes welded or riveted to the sheet steel, for supporting the panelboard front. All cabinets shall be so fabricated that no part of any surface on the finished cabinet shall deviate from a true plane by more than 3 millimeters (1/8 inch). Holes shall be provided in the back of indoor surface-mounted cabinets, with outside spacers and inside stiffeners, for mounting the cabinets with a 15 millimeter (1/2 inch) clear space between the back of the cabinet and the wall surface. Flush doors shall be mounted on hinges that expose only the hinge roll to view when the door is closed. Each door shall be fitted with a combined catch and lock, except that doors over 600 millimeters (24 inches) long shall be provided with a three-point latch having a knob with a T-handle, and a cylinder lock. Two keys shall be provided with each lock, and all locks shall be keyed alike. Finished-head cap screws shall be provided for mounting the panelboard fronts on the cabinets. Enclosure shall have nameplates in accordance with paragraph NAMEPLATES. Directory holders, containing a neatly typed or printed directory under a transparent cover, shall be provided on the inside of panelboard doors.

2.8.2 Buses

All panelboards shall be of the dead-front type with buses and circuit breakers mounted on a plate or base for installation as a unit in a cabinet. All buses shall be of copper or aluminum and shall be tin or silver-plated throughout. Copper or aluminum bars and shapes for bus conductors shall conform to the applicable requirements of ASTM B 187, and ASTM B 317. The sizes of buses and the details of panelboard construction shall meet or exceed the requirements of NEMA PB 1. Suitable provisions shall be made for mounting the bus within panelboards and adjusting their positions in the cabinets. Terminal lugs required to accommodate the conductor sizes shown on the drawing, shall be provided for all branch circuits larger than No. 10 AWG. A grounding lug suitable for 1/0 AWG wire shall be provided for each panelboard.

2.8.3 Components

Each branch circuit, and the main buses where so specified or shown on the drawings, shall be equipped with molded-case circuit breakers having overcurrent trip ratings as shown on the drawings. The circuit breakers shall be of a type designed for bolted connection to buses in a panelboard assembly, and shall meet the requirements of paragraph MOLDED CASE CIRCUIT BREAKERS. Circuit breakers of the same frame size and rating shall be interchangeable.

2.9 PAINTING

Interior and exterior steel surfaces of equipment enclosures shall be thoroughly cleaned and then receive a rust-inhibitive phosphatizing or equivalent treatment prior to painting. Exterior surfaces shall be free from holes, seams, dents, weld marks, loose scale or other imperfections. Interior surfaces shall receive not less than one coat of corrosion-resisting paint in accordance with the manufacturer's standard practice. Exterior surfaces shall be primed, filled where necessary, and given not less than two coats baked enamel with semigloss finish. Equipment located indoors shall be ANSI Light Gray. All touch-up work shall be done with manufacturer's coatings as supplied under paragraph SPARE PARTS.

2.10 FACTORY TESTS

Each item of equipment supplied under this contract shall be given the manufacturer's routine factory tests and tests as specified below, to insure successful operation of all parts of the assemblies. All tests required herein shall be witnessed by the Contracting Officer unless waived in writing, and no equipment shall be shipped until it has been approved for shipment by the Contracting Officer. The Contractor shall notify the Contracting Officer a minimum of 14 days prior to the proposed date of the tests so that arrangements can be made for the Contracting Officer to be present at the tests. The factory test equipment and the test methods used shall conform to the applicable NEMA Standards, and shall be subject to the approval of the Contracting Officer. Reports of all witnessed tests shall be signed by witnessing representatives of the Contractor and Contracting Officer. The cost of performing all tests shall be borne by the Contractor and shall be included in the prices bid in the schedule for equipment.

2.10.1 Not Used

2.10.2 Not Used

2.10.3 Panelboards Tests

Each panelboard shall be assembled with cabinet and front to the extent necessary to check the fit and provisions for installing all parts in the field. Each panelboard shall be given a dielectric test in accordance with NEMA PB 1. All circuit breakers shall be operated to check mechanical adjustments. All doors and locks shall be checked for door clearances and fits and the performance of lock and latches.

PART 3 EXECUTION (Not Applicable)

-- End of Section --

SECTION TABLE OF CONTENTS

DIVISION 16 - ELECTRICAL

SECTION 16415

ELECTRICAL WORK, INTERIOR

08/96

PART 1 GENERAL

1.1 REFERENCES
1.2 GENERAL
1.2.1 Rules
1.2.2 Coordination
1.2.3 Special Environments
1.2.3.1 Weatherproof Locations
1.2.3.2 Not Used
1.2.3.3 Ducts, Plenums and Other Air-Handling Spaces
1.2.4 Standard Products
1.2.5 NAMEPLATES
1.2.5.1 Identification Nameplates
1.2.6 As-Built Drawings
1.2.7 Recessed Light Fixtures (RLF) Option
1.3 SUBMITTALS
1.4 WORKMANSHIP

PART 2 PRODUCTS

2.1 Not Used
2.2 CABLES AND WIRES
2.2.1 Equipment Manufacturer Requirements
2.2.2 Aluminum Conductors
2.2.3 Insulation
2.2.4 Bonding Conductors
2.2.5 Service Entrance Cables
2.2.6 Not Used
2.2.7 Not Used
2.2.8 Not Used
2.2.9 Not Used
2.2.10 Not Used
2.2.11 Not Used
2.2.12 Cord Sets and Power-Supply Cords
2.3 CABLE TRAYS
2.3.1 Trough
2.4 Not Used
2.5 Not Used
2.6 CIRCUIT BREAKERS
2.6.1 MOLDED-CASE CIRCUIT BREAKERS
2.6.1.1 Construction
2.6.1.2 Ratings
2.6.1.3 Cascade System Ratings
2.6.1.4 Thermal-Magnetic Trip Elements
2.6.2 Solid-State Trip Elements
2.6.3 Current-Limiting Circuit Breakers

2.6.4 Not Used
2.6.5 HACR Circuit Breakers
2.7 MOTOR SHORT-CIRCUIT PROTECTOR (MSCP)
2.7.1 Construction
2.7.2 Ratings
2.8 CONDUIT AND TUBING
2.8.1 Electrical, Zinc-Coated Steel Metallic Tubing (EMT)
2.8.2 Electrical Plastic Tubing and Conduit
2.8.3 Flexible Conduit, Steel and Plastic
2.8.4 Intermediate Metal Conduit
2.8.5 PVC Coated Rigid Steel Conduit
2.8.6 Not Used
2.8.7 Rigid Metal Conduit
2.8.8 Rigid Plastic
2.8.9 Not Used
2.9 CONDUIT AND DEVICE BOXES AND FITTINGS
2.9.1 Boxes, Metallic Outlet
2.9.2 Boxes, Nonmetallic, Outlet and Flush-Device Boxes and Covers
2.9.3 Boxes, Outlet for Use in Hazardous (Classified) Locations
2.9.4 Boxes, Switch (Enclosed), Surface-Mounted
2.9.5 Fittings for Conduit and Outlet Boxes
2.9.6 Not Used
2.9.7 Fittings, PVC, for Use with Rigid PVC Conduit and Tubing
2.10 Not Used
2.11 CONNECTORS, WIRE PRESSURE
2.11.1 For Use With Copper Conductors
2.11.2 For Use With Aluminum Conductors
2.12 ELECTRICAL GROUNDING AND BONDING EQUIPMENT
2.12.1 Not Used
2.12.2 Ground Bus
2.13 Not Used
2.14 FIXTURES, LIGHTING AND FIXTURE ACCESSORIES/COMPONENTS
2.14.1 Fixture, Auxiliary or Emergency
2.14.2 Incandescent Fixture
2.14.3 Fluorescent
2.14.4 High-Intensity-Discharge
2.15 LOW-VOLTAGE FUSES AND FUSEHOLDERS
2.15.1 Fuses, Low Voltage Cartridge Type
2.15.2 Fuses, High-Interrupting-Capacity, Current-Limiting Type
2.15.3 Fuses, Class K, High-Interrupting-Capacity Type
2.15.4 Fuses, Class H
2.15.5 Fuses, Class R
2.15.6 Fuses, Class T
2.15.7 Fuses for Supplementary Overcurrent Protection
2.15.8 Fuses, D-C for Industrial Use
2.15.9 Fuseholders
2.16 INSTRUMENTS, ELECTRICAL INDICATING
2.17 MOTORS, AC, FRACTIONAL AND INTEGRAL
2.17.1 Rating
2.17.2 Motor Efficiencies
2.18 MOTOR CONTROLS
2.18.1 General
2.18.2 Motor Starters
2.18.3 Thermal-Overload Protection
2.18.4 Low-Voltage Motor Overload Relays
2.18.4.1 General
2.18.4.2 Construction
2.18.4.3 Ratings
2.19 PANELBOARDS

2.20 RECEPTACLES
2.20.1 Receptacles and face plates shall be ivory in color.
2.20.2 Not Used
2.20.3 Standard Grade
2.20.4 Ground Fault Interrupters
2.20.5 Not Used
2.20.6 NEMA Standard Receptacle Configurations
2.21 Service Entrance Equipment
2.22 SPLICE, CONDUCTOR
2.23 POWER-SWITCHGEAR ASSEMBLIES INCLUDING SWITCHBOARDS
2.23.1 Circuit Breakers
2.23.2 Not Used
2.23.2.1 Not Used
2.23.2.2 Control Switch
2.23.2.3 Control Power Sources
2.24 SNAP SWITCHES
2.25 TAPES
2.25.1 Plastic Tape
2.25.2 Rubber Tape
2.26 Not Used
2.26.1 Not Used
2.26.2 [Enter Appropriate Subpart Title Here]
2.27 Not Used
2.28 Not Used
2.29 WATTHOUR/DEMAND METERS, CHECK
2.30 Not Used
2.30.1 Not Used
2.30.2 [Enter Appropriate Subpart Title Here]
2.30.2.1 [Enter Appropriate Subpart Title Here]
2.31 WIRING DEVICES
2.32 Not Used
2.33 COORDINATED POWER SYSTEM PROTECTION
2.33.1 Scope of Analyses
2.33.2 Determination of Facts
2.33.3 Single Line Diagram
2.33.4 Fault Current Analysis
2.33.4.1 Method
2.33.4.2 Data
2.33.4.3 Fault Current Availability
2.33.5 Coordination Study
2.33.6 Study Report

PART 3 EXECUTION

3.1 GROUNDING
3.1.1 Not Used
3.1.2 Not Used
3.1.3 Grounding Conductors
3.2 WIRING METHODS
3.2.1 Conduit and Tubing Systems
3.2.1.1 Pull Wires
3.2.1.2 Conduit Stub-Ups
3.2.1.3 Below Slab-on-Grade or in the Ground
3.2.1.4 Installing in Slabs Including Slabs on Grade
3.2.1.5 Changes in Direction of Runs
3.2.1.6 Supports
3.2.1.7 Exposed Raceways
3.2.1.8 Exposed Risers
3.2.1.9 Exposed Lengths of Conduit, Over 600 Volts

3.2.1.10 Communications Raceways
3.2.2 Not Used
3.2.3 Cable Trays
3.2.4 Cables and Conductors
3.2.4.1 Sizing
3.2.4.2 Not Used
3.2.4.3 Not Used
3.2.4.4 Not Used
3.2.4.5 Cable Splicing
3.2.4.6 Conductor Identification and Tagging
3.3 BOXES AND SUPPORTS
3.3.1 Box Applications
3.3.2 Brackets and Fasteners
3.3.3 Mounting in Walls, Ceilings, or Recessed Locations
3.3.4 Installation in Overhead Spaces
3.4 DEVICE PLATES
3.5 RECEPTACLES
3.5.1 Single and Duplex, 15 or 20-ampere, 125 volt
3.5.2 Not Used
3.5.3 Floor Outlets
3.5.4 Weatherproof Applications
3.5.4.1 Damp Locations
3.5.4.2 Wet Locations
3.5.5 Receptacles, 15-Ampere, 250-Volt
3.5.6 Receptacles, 20-Ampere, 250-Volt
3.5.7 Receptacles, 30-Ampere, 125/250-Volt
3.5.8 Receptacles, 30-Ampere, 250-Volt
3.5.9 Receptacles, 50-Ampere, 125/250-Volt
3.5.10 Receptacles, 50-Ampere, 250-Volt
3.6 WALL SWITCHES
3.7 SERVICE EQUIPMENT
3.8 PANELBOARDS AND LOADCENTERS
3.8.1 Panelboards
3.9 FUSES
3.9.1 Cartridge Fuses; Noncurrent-Limiting Type
3.9.2 Cartridge Fuses; Current-Limiting Type
3.9.3 Not Used
3.9.4 Motor and Transformer Circuit Fuses
3.10 Not Used
3.11 Not Used
3.12 MOTORS
3.13 MOTOR CONTROL
3.13.1 Not Used
3.13.2 Not Used
3.13.3 Contacts
3.13.4 Not Used
3.14 MOTOR-DISCONNECT MEANS
3.15 Not Used
3.16 LAMPS AND LIGHTING FIXTURES
3.16.1 Lamps
3.16.1.1 Incandescent
3.16.1.2 Fluorescent
3.16.1.3 High-Intensity-Discharge
3.16.2 Fixtures
3.16.2.1 Accessories
3.16.2.2 Suspended Fixtures
3.16.2.3 Ceiling Fixtures
3.16.2.4 Sockets
3.16.3 Not Used

3.17 Not Used
3.18 EQUIPMENT CONNECTIONS
3.18.1 Motors and Motor Control
3.18.2 Installation of Government-Furnished Equipment
3.18.3 Not Used
3.19 CIRCUIT PROTECTIVE DEVICES
3.20 PAINTING AND FINISHING
3.21 Not Used
3.22 FIELD TESTING
3.22.1 Safety
3.22.2 Not Used
3.22.3 Not Used
3.22.4 Cable Tests
3.22.4.1 Not Used
3.22.4.2 Low Voltage Cable Tests
3.22.5 Not Used
3.22.6 Motor Tests
3.22.7 Not Used
3.22.8 Not Used
3.22.9 Circuit Breaker Tests
3.22.9.1 Not Used
3.22.9.2 Not Used
3.22.9.3 Circuit Breakers, Molded Case
3.23 OPERATING TESTS
3.24 FIELD SERVICE
3.24.1 Onsite Training
3.24.2 Installation Engineer
3.25 ACCEPTANCE

-- End of Section Table of Contents --

SECTION 16415

ELECTRICAL WORK, INTERIOR
08/96

PART 1 GENERAL

1.1 REFERENCES

The publications listed below form a part of this specification to the extent referenced. The publications are referred to in the text by basic designation only.

AMERICAN NATIONAL STANDARDS INSTITUTE (ANSI)

ANSI C12.10	(1987) Electromechanical Watthour Meters
ANSI C39.1	(1981; R 1992) Requirements for Electrical Analog Indicating Instruments
ANSI C82.4	(1992) Ballasts for High-Intensity-Discharge and Low-Pressure Sodium Lamps (Multiple-Supply Type)

AMERICAN SOCIETY FOR TESTING AND MATERIALS (ASTM)

ASTM B 1	(1995) Hard-Drawn Copper Wire
ASTM B 8	(1995) Concentric-Lay-Stranded Copper Conductors, Hard, Medium-Hard, or Soft
ASTM D 709	(1992; R 1997) Laminated Thermosetting Materials

CODE OF FEDERAL REGULATIONS (CFR)

47 CFR 18	Industrial, Scientific, and Medical Equipment

INSTITUTE OF ELECTRICAL AND ELECTRONICS ENGINEERS (IEEE)

IEEE ANSI/IEEE C37.20.1	(1993) Metal-Enclosed Low-Voltage Power Circuit-Breaker Switchgear
IEEE C62.41	(1991; R 1995) Surge Voltages in Low-Voltage AC Power Circuits
IEEE Std 242	(1986; R 1991) Recommended Practice for Protection and Coordination of Industrial and Commercial Power Systems
IEEE Std 399	(1990) Recommended Practice for Industrial and Commercial Power Systems Analysis

NATIONAL ELECTRICAL MANUFACTURERS ASSOCIATION (NEMA)

NEMA AB 1	(1993) Molded Case Circuit Breakers and Molded Case Switches
NEMA FU 1	(1986) Low Voltage Cartridge Fuses
NEMA ICS 1	(1993) Industrial Control and Systems
NEMA ICS 2	(1993) Industrial Control and Systems Controllers, Contactors, and Overload Relays Rated Not More Than 2,000 Volts AC or 750 Volts DC
NEMA ICS 3	(1993) Industrial Control and Systems Factory Built Assemblies
NEMA ICS 6	(1993) Industrial Control and Systems Enclosures
NEMA LE 4	(1987) Recessed Luminaires, Ceiling Compatibility
NEMA MG 1	(1993; Rev 1; Rev 2; Rev 3) Motors and Generators
NEMA MG 10	(1994) Energy Management Guide for Selection and Use of Polyphase Motors
NEMA OS 1	(1989) Sheet-Steel Outlet Boxes, Device Boxes, Covers, and Box Supports
NEMA OS 2	(1986; Errata Aug 1986; R 1991) Nonmetallic Outlet Boxes, Device Boxes, Covers and Box Supports
NEMA PB 1	(1990) Panelboards
NEMA PB 2	(1995) Deadfront Distribution Switchboards
NEMA RN 1	(1989) Polyvinyl-Chloride (PVC) Externally Coated Galvanized Rigid Steel Conduit and Intermediate Metal Conduit
NEMA TC 2	(1990) Electrical Polyvinyl Chloride (PVC) Tubing (EPT) and Conduit (EPC-40 and EPC-80)
NEMA VE 1	(1996) Metal Cable Tray Systems
NEMA WD 1	(1983; R 1989) General Requirements for Wiring Devices
NEMA WD 6	(1988) Wiring Devices - Dimensional Requirements

NATIONAL FIRE PROTECTION ASSOCIATION (NFPA)

NFPA 70	(1996; Errata 96-4) National Electrical Code

NFPA 101	(1997; Errata 97-1) Life Safety Code

UNDERWRITERS LABORATORIES (UL)

UL 1	(1993; Rev thru Jan 1995) Flexible Metal Conduit
UL 6	(1997) Rigid Metal Conduit
UL 20	(1995; Rev thru Jan 1998) General-Use Snap Switches
UL 67	(1993; Rev thru Nov 1995) Panelboards
UL 83	(1996; Rev Sep 1997) Thermoplastic-Insulated Wires and Cables
UL 98	(1994; R thru Oct 1995) Enclosed and Dead-Front Switches
UL 198B	(1995) Class H Fuses
UL 198C	(1986; Rev thru Feb 1998) High-Interrupting-Capacity Fuses, Current-Limiting Types
UL 198D	(1995) Class K Fuses
UL 198E	(1988; Rev Jul 1988) Class R Fuses
UL 198G	(1988; Rev May 1988) Fuses for Supplementary Overcurrent Protection
UL 198H	(1988; Rev thru Nov 1993) Class T Fuses
UL 198L	(1995; Rev May 1995) D-C Fuses for Industrial Use
UL 360	(1996; Rev thru Oct 1997) Liquid-Tight Flexible Steel Conduit
UL 467	(1993; Rev thru Aug 1996) Grounding and Bonding Equipment
UL 486A	(1997) Wire Connectors and Soldering Lugs for Use with Copper Conductors
UL 486B	(1997; Rev Jun 1997) Wire Connectors for Use with Aluminum Conductors
UL 486C	(1997) Splicing Wire Connectors
UL 486E	(1994; Rev thru Feb 1997) Equipment Wiring Terminals for Use with Aluminum and/or Copper Conductors
UL 489	(1996; Rev thru Nov 1997) Molded-Case Circuit Breakers, Molded-Case Switches, and Circuit-Breaker Enclosures

UL 498	(1996; Rev thru Nov 1997) Attachment Plugs and Receptacles
UL 508	(1993; Rev thru Oct 1997) Industrial Control Equipment
UL 510	(1994; Rev thru Nov 1997) Insulating Tape
UL 512	(1993; R Dec 1995) Fuseholders
UL 514A	(1996) Metallic Outlet Boxes
UL 514B	(1997) Fittings for Conduit and Outlet Boxes
UL 514C	(1996) Nonmetallic Outlet Boxes, Flush-Device Boxes, and Covers
UL 542	(1994; Rev May 1997) Lampholders, Starters, and Starter Holders for Fluorescent Lamps
UL 651	(1995; Rev thru Apr 1997) Schedule 40 and 80 Rigid PVC Conduit
UL 651A	(1995; Rev Sep 1996) Type EB and A Rigid PVC Conduit and HDPE Conduit
UL 674	(1994; Rev thru Feb 1997) Electric Motors and Generators for Use in Division 1 Hazardous (Classified) Locations
UL 797	(1993; Rev thru Mar 1997) Electrical Metallic Tubing
UL 817	(1994; Rev thru Aug 1997) Cord Sets and Power-Supply Cords
UL 844	(1995; Rev thru Aug 1997) Electric Lighting Fixtures for Use in Hazardous (Classified) Locations
UL 845	(1995; Rev Feb 1996) Motor Control Centers
UL 854	(1996) Service-Entrance Cables
UL 869A	(1993; Rev thru Apr 1996) Reference Standard for Service Equipment
UL 877	(1993; Rev thru May 1997) Circuit Breakers and Circuit-Breaker Enclosures for Use in Hazardous (Classified) Locations
UL 886	(1994; Rev thru Jan 1997) Outlet Boxes and Fittings for Use in Hazardous (Classified) Locations
UL 891	(1994; Rev thru Jan 1995) Dead-Front

	Switchboards
UL 924	(1995; Rev thru Oct 97) Emergency Lighting and Power Equipment
UL 935	(1995; Rev thru Apr 1997)Fluorescent-Lamp Ballasts
UL 943	(1993; Rev thru Mar 1997)Ground-Fault Circuit-Interrupters
UL 1004	(1994; Rev thru Feb 1997) Electric Motors
UL 1029	(1994; Rev thru Sep 1995) High-Intensity-Discharge Lamp Ballasts
UL 1242	(1996; Rev Apr 1997) Intermediate Metal Conduit
UL 1570	(1995; Rev thru Jun 1997) Fluorescent Lighting Fixtures
UL 1571	(1995; Rev thru Jun 97) Incandescent Lighting Fixtures
UL 1572	(1995; Rev thru Jun 97) High Intensity Discharge Lighting Fixtures
UL 1660	(1994; Rev Jan 1996) Liquid-Tight Flexible Nonmetallic Conduit
UL Elec Const Dir	(1997) Electrical Construction Equipment Directory

1.2 GENERAL

1.2.1 Rules

The installation shall conform to the requirements of NFPA 70 and NFPA 101, unless more stringent requirements are indicated or shown.

1.2.2 Coordination

The drawings indicate the extent and the general location and arrangement of equipment, conduit, and wiring. The Contractor shall become familiar with all details of the work and verify all dimensions in the field so that the outlets and equipment shall be properly located and readily accessible. Lighting fixtures, outlets, and other equipment and materials shall be located to avoid interference with mechanical or structural features; otherwise, lighting fixtures shall be symmetrically located according to the room arrangement when uniform illumination is required, or asymmetrically located to suit conditions fixed by design and shown. Raceways, junction and outlet boxes, and lighting fixtures shall not be supported from sheet metal roof decks. If any conflicts occur necessitating departures from the drawings, details of and reasons for departures shall be submitted and approved prior to implementing any change. The Contractor shall coordinate electrical work with the HVAC and electrical drawings and specifications and provide power related wiring.

1.2.3 Special Environments

1.2.3.1 Weatherproof Locations

Wiring, Fixtures, and equipment in designated locations shall conform to NFPA 70 requirements for installation in damp or wet locations.

1.2.3.2 Not Used

1.2.3.3 Ducts, Plenums and Other Air-Handling Spaces

Wiring and equipment in ducts, plenums and other air-handling spaces shall be installed using materials and methods in conformance with NFPA 70unless more stringent requirements are indicated in this specification or on the contract drawings.

1.2.4 Standard Products

Material and equipment shall be a standard product of a manufacturer regularly engaged in the manufacture of the product and shall essentially duplicate items that have been in satisfactory use for at least 2 years prior to bid opening.

1.2.5 NAMEPLATES

1.2.5.1 Identification Nameplates

Major items of electrical equipment and major components shall be permanently marked with an identification name to identify the equipment by type or function and specific unit number as indicated. Designation of motors shall coincide with their designation in the motor control center or panel. Unless otherwise specified, identification nameplates shall be made of laminated plastic in accordance with ASTM D 709 with black outer layers and a white core. Edges shall be chamfered. Plates shall be fastened with black-finished round-head drive screws, except motors, or approved nonadhesive metal fasteners. When the nameplate is to be installed on an irregular-shaped object, the Contractor shall devise an approved support suitable for the application and ensure the proper installation of the supports and nameplates. In all instances, the nameplate shall be installed in a conspicuous location. At the option of the Contractor, the equipment manufacturer's standard embossed nameplate material with black paint-filled letters may be furnished in lieu of laminated plastic. The front of each panelboard, motor control center, switchgear, and switchboard shall have a nameplate to indicate the phase letter, corresponding color and arrangement of the phase conductors. The following equipment, as a minimum, shall be provided with identification nameplates:

Minimum 1/4 inch High Letters	Minimum 1/8 inch High Letters
Panelboards	
Starters	
Safety Switches	
Transformers	
Equipment Enclosures	
Switchboards	
Motors	

Minimum 1/4 inch High Letters	Minimum 1/8 inch High Letters

Each panel, section, or unit in motor control centers, switchgear or similar assemblies shall be provided with a nameplate in addition to nameplates listed above, which shall be provided for individual compartments in the respective assembly, including nameplates which identify "future," "spare," and "dedicated" or "equipped spaces."

1.2.6 As-Built Drawings

Following the project completion or turnover, within 30 days the Contractor shall furnish 2 sets of as-built drawings to the Contracting Officer.

1.2.7 Recessed Light Fixtures (RLF) Option

The Contractor has the option to substitute inch-pound (I-P) RLF to metric RLF. This option shall be coordinated with Section \=09510=\ ACOUSTICAL CEILINGS.

1.3 SUBMITTALS

Government approval is required for submittals with a "GA" designation; submittals having an "FIO" designation are for information only. The following shall be submitted in accordance with Section 01330 SUBMITTAL PROCEDURES:

SD-01 Data

Fault Current and Protective Device Coordination Study; GA.

The study shall be submitted along with protective device equipment submittals. No time extensions or similar contract modifications will be granted for work arising out of the requirements for this study. Approval of protective devices proposed shall be based on recommendations of this study, The Government shall not be held responsible for any changes to equipment, device ratings, settings, or additional labor for installation of equipment or devices ordered and/or procured prior to approval of the study.

Manufacturer's Catalog; GA.

Data composed of catalog cuts, brochures, circulars, specifications, product data, and printed information in sufficient detail and scope to verify compliance with the requirements of the contract documents.

Material, Equipment, and Fixture Lists; GA1.

A complete itemized listing of equipment and materials proposed for incorporation into the work. Each entry shall include an item number, the quantity of items proposed, and the name of the manufacturer of each item.

Installation Procedures; FIO.

Installation procedures for rotating equipment, transformers, switchgear, battery systems, voltage regulators, and grounding resistors. Procedures shall include diagrams, instructions, and precautions required to install, adjust, calibrate, and test devices and equipment.

SD-04 Drawings

Interior Electrical Equipment; GA1.

Detail drawings consisting of equipment drawings, illustrations, schedules, instructions, diagrams, and other information necessary to define the installation. Detail drawings shall show the rating of items and systems and how the components of an item and system are assembled, function together, and how they will be installed on the project. Data and drawings for component parts of an item or system shall be coordinated and submitted as a unit. Data and drawings shall be coordinated and included in a single submission. Multiple submissions for the same equipment or system are not acceptable except where prior approval has been obtained from the Contracting Officer. In such cases, a list of data to be submitted later shall be included with the first submission. Detail drawings shall show physical arrangement, construction details, connections, finishes, materials used in fabrication, provisions for conduit or busway entrance, access requirements for installation and maintenance, physical size, electrical characteristics, foundation and support details, and equipment weight. Drawings shall be drawn to scale and/or dimensioned. Optional items shall be clearly identified as included or excluded. Detail drawings shall as a minimum include:

Structural drawings showing the structural or physical features of major equipment items, components, assemblies, and structures, including foundations or other types of supports for equipment and conductors. These drawings shall include accurately scaled or dimensioned outline and arrangement or layout drawings to show the physical size of equipment and components and the relative arrangement and physical connection of related components. Weights of equipment, components and assemblies shall be provided when required to verify the adequacy of design and proposed construction of foundations or other types of supports. Dynamic forces shall be stated for switching devices when such forces must be considered in the design of support structures. The appropriate detail drawings shall show the provisions for leveling, anchoring, and connecting all items during installation, and shall include any recommendations made by the manufacturer.

Electrical drawings including single-line and three-line diagrams, and schematics or elementary diagrams of each electrical system; internal wiring and field connection diagrams of each electrical device when published by the manufacturer; wiring diagrams of cabinets, panels, units, or separate mountings; interconnection diagrams that show the wiring between separate components of assemblies; field connection diagrams that show the termination of wiring routed between separate items of equipment; internal wiring diagrams of equipment showing wiring as actually provided for this project. Field wiring connections shall be clearly identified.

If departures from the contract drawings are deemed necessary by the Contractor, complete details of such departures, including changes in related portions of the project and the reasons why, shall be submitted with the detail drawings. Approved departures shall be made at no additional cost to the Government.

As-Built Drawings; GA.

The as-built drawings shall be a record of the construction as installed. The drawings shall include all the information shown on the contract

drawings, deviations, modifications, and changes from the contract drawings, however minor. The as-built drawings shall be kept at the job site and updated daily. The as-built drawings shall be a full-sized set of prints marked to reflect all deviations, changes, and modifications. The as-built drawings shall be complete and show the location, size, dimensions, part identification, and other information. Additional sheets may be added. The as-built drawings shall be jointly inspected for accuracy and completeness by the Contractor's quality control representative and by the Contracting Officer prior to the submission of each monthly pay estimate. Upon completion of the work, the Contractor shall submit three full sized sets of the marked prints to the Contracting Officer for approval. If upon review, the as-built drawings are found to contain errors and/or omissions, they will be returned to the Contractor for correction. The Contractor shall correct and return the as-built drawings to the Contracting Officer for approval within ten calendar days from the time the drawings are returned to the Contractor.

SD-08 Statements

Onsite Test; GA.

A detailed description of the Contractor's proposed procedures for on-site tests.

SD-09 Reports

Factory Test Reports; GA.

Six copies of the information described below in 8 1/2 x 11 inch binders having a minimum of 5 rings from which material may readily be removed and replaced, including a separate section for each test. Sections shall be separated by heavy plastic dividers with tabs.

a. A list of equipment used, with calibration certifications.

b. A copy of measurements taken.

c. The dates of testing.

d. The equipment and values to be verified.

e. The conditions specified for the test.

f. The test results, signed and dated.

g. A description of adjustments made.

Field Test Plan; GA.

A detailed description of the Contractor's proposed procedures for onsite test submitted 30 days prior to testing the installed system. No field test will be performed until the test plan is approved. The test plan shall consist of complete field test procedures including tests to be performed, test equipment required, and tolerance limits.

Field Test Reports; GA.

Six copies of the information described below in 8 1/2 x 11 inch binders having a minimum of 5 rings from which material may readily be removed and

replaced, including a separate section for each test. Sections shall be separated by heavy plastic dividers with tabs.

a. A list of equipment used, with calibration certifications.

b. A copy of measurements taken.

c. The dates of testing.

d. The equipment and values to be verified.

e. The conditions specified for the test.

f. The test results, signed and dated.

g. A description of adjustments made.

h. Final position of controls and device settings.

SD-13 Certificates

Materials and Equipment; FIO.

The label or listing of the Underwriters Laboratories, Inc., will be accepted as evidence that the materials or equipment conform to the applicable standards of that agency. In lieu of this label or listing, a statement from a nationally recognized, adequately equipped testing agency indicating that the items have been tested in accordance with required procedures and that the materials and equipment comply with all contract requirements will be accepted. However, materials and equipment installed in hazardous locations must bear the UL label unless the data submitted from other testing agency is specifically approved in writing by the Contracting Officer. Items which are required to be listed and labeled in accordance with Underwriters Laboratories must be affixed with a UL label that states that it is UL listed. No exceptions or waivers will be granted to this requirement. Materials and equipment will be approved based on the manufacturer's published data.

For other than equipment and materials specified to conform to UL publications, a manufacturer's statement indicating complete compliance with the applicable standard of the American Society for Testing and Materials, National Electrical Manufacturers Association, or other commercial standard, is acceptable.

1.4 WORKMANSHIP

Materials and equipment shall be installed in accordance with NFPA 70, recommendations of the manufacturer, and as shown.

PART 2 PRODUCTS

Products shall conform to the respective publications and other requirements specified below. Materials and equipment not listed below shall be as specified elsewhere in this section. Items of the same classification shall be identical including equipment, assemblies, parts, and components.

2.1 Not Used

2.2 CABLES AND WIRES

Conductors No. 8 AWG and larger diameter shall be stranded. Conductors No. 10 AWG and smaller diameter shall be solid, except that conductors for remote control, alarm, and signal circuits, classes 1, 2, and 3, shall be stranded unless specifically indicated otherwise. Conductor sizes and ampacities shown are based on copper, unless indicated otherwise. All conductors shall be copper.

2.2.1 Equipment Manufacturer Requirements

When manufacturer's equipment requires copper conductors at the terminations or requires copper conductors to be provided between components of equipment, provide copper conductors or splices, splice boxes, and other work required to meet manufacturer's requirements.

2.2.2 Aluminum Conductors

Aluminum conductors shall not be used.

2.2.3 Insulation

Unless indicated otherwise, or required by NFPA 70, power and lighting wires shall be 600-volt, Type THWN, THHN, or THW conforming to UL 83, except that grounding wire may be type TW conforming to UL 83; remote-control and signal circuits shall be Type TW, THW or TF, conforming to UL 83. Where lighting fixtures require 90-degree Centigrade (C) conductors, provide only conductors with 90-degree C insulation or better.

2.2.4 Bonding Conductors

ASTM B 1, solid bare copper wire for sizes No. 8 AWG and smaller diameter; ASTM B 8, Class B, stranded bare copper wire for sizes No. 6 AWG and larger diameter.

2.2.5 Service Entrance Cables

Service entrance (SE) and underground service entrance (USE) cables, UL 854.

2.2.6 Not Used

2.2.7 Not Used

2.2.8 Not Used

2.2.9 Not Used

2.2.10 Not Used

2.2.11 Not Used

2.2.12 Cord Sets and Power-Supply Cords

UL 817.

2.3 CABLE TRAYS

NEMA VE 1 cable trays shall form a wireway system, and shall be of nominal 4 inch depth. Cable trays shall be constructed of aluminum. Trays shall

include splice and end plates, dropouts, and miscellaneous hardware. Edges, fittings, and hardware shall be finished free from burrs and sharp edges. Fittings shall have not less than the load-carrying ability of straight tray sections and shall have manufacturer's minimum standard radius. Radius of bends shall be 12 inches..

2.3.1 Trough

Trough-type cable trays shall be sized as indicated on drawings.

2.4 Not Used

2.5 Not Used

2.6 CIRCUIT BREAKERS

2.6.1 MOLDED-CASE CIRCUIT BREAKERS

Molded-case circuit breakers shall conform to NEMA AB 1 and UL 489and UL 877 for circuit breakers and circuit breaker enclosures located in hazardous (classified) locations. Circuit breakers may be installed in panelboards, switchboards, enclosures, motor control centers, or combination motor controllers.

2.6.1.1 Construction

Circuit breakers shall be suitable for mounting and operating in any position. Lug shall be listed for [copper conductors only] [copper and aluminum conductors] in accordance with UL 486E. Single-pole circuit breakers shall be full module size with not more than one pole per module. Multi-pole circuit breakers shall be of the common-trip type having a single operating handle such that an overload or short circuit on any one pole will result in all poles opening simultaneously. Sizes of 100 amperes or less may consist of single-pole breakers permanently factory assembled into a multi-pole unit having an internal, mechanical, nontamperable common-trip mechanism and external handle ties. All circuit breakers shall have a quick-make, quick-break overcenter toggle-type mechanism, and the handle mechanism shall be trip-free to prevent holding the contacts closed against a short-circuit or sustained overload. All circuit breaker handles shall assume a position between "ON" and "OFF" when tripped automatically. All ratings shall be clearly visible.

2.6.1.2 Ratings

Voltage ratings shall be not less than the applicable circuit voltage. The interrupting rating of the circuit breakers shall be at least equal to the available short-circuit current at the line terminals of the circuit breaker and correspond to the UL listed integrated short-circuit current rating specified for the panelboards and switchboards. Molded-case circuit breakers shall have nominal voltage ratings, maximum continuous-current ratings, and maximum short-circuit interrupting ratings in accordance with NEMA AB 1. Ratings shall be coordinated with system X/R ratio.

2.6.1.3 Cascade System Ratings

Circuit breakers used in series combinations shall be in accordance with UL 489. Equipment, such as switchboards and panelboards, which house series-connected circuit breakers shall be clearly marked accordingly. Series combinations shall be listed in the UL Recognized Component

Directory under "Circuit Breakers-Series Connected."

2.6.1.4 Thermal-Magnetic Trip Elements

Thermal magnetic circuit breakers shall be provided as shown. Automatic operation shall be obtained by means of thermal-magnetic tripping devices located in each pole providing inverse time delay and instantaneous circuit protection. The instantaneous magnetic trip shall be adjustable and accessible from the front of all circuit breakers on frame sizes above 100 amperes.

2.6.2 Solid-State Trip Elements

Solid-state circuit breakers shall be provided as shown. All electronics shall be self-contained and require no external relaying, power supply, or accessories. Printed circuit cards shall be treated to resist moisture absorption, fungus growth, and signal leakage. All electronics shall be housed in an enclosure which provides protection against arcs, magnetic interference, dust, and other contaminants. Solid-state sensing shall measure true RMS current with error less than one percent on systems with distortions through the 13th harmonic. Peak or average actuating devices are not acceptable. Current sensors shall be torodial construction, encased in a plastic housing filled with epoxy to protect against damage and moisture and shall be integrally mounted on the breaker. Where indicated on the drawings, circuit breaker frames shall be rated for 100 percent continuous duty. Circuit breakers shall have tripping features as shown on the drawings and as described below:

a. Long-time current pick-up, adjustable from 50 percent to 100 percent of continuous current rating.

b. Adjustable long-time delay.

c. Short-time current pick-up, adjustable from 1.5 to 9 times long-time current setting.

d. Adjustable short-time delay.

e. Short-time I square times t switch.

f. Instantaneous current pick-up, adjustable from 1.5 to 9 times long-time current setting.

2.6.3 Current-Limiting Circuit Breakers

Current-limiting circuit breakers shall be provided as shown. Current-limiting circuit breakers shall limit the let-through I square times t to a value less than the I square times t of one-half cycle of the symmetrical short-circuit current waveform. On fault currents below the threshold of limitation, breakers shall provide conventional overload and short-circuit protection. Integrally-fused circuit breakers shall not be used.

2.6.4 Not Used

2.6.5 HACR Circuit Breakers

Circuit breakers 60 amperes or below, 240 volts, 1-pole or 2-pole, intended to protect multi-motor and combination-load installations involved in

heating, air conditioning, and refrigerating equipment shall be marked "Listed HACR Type."

2.7 MOTOR SHORT-CIRCUIT PROTECTOR (MSCP)

Motor short-circuit protectors shall conform to UL 508 and shall be provided as shown. Protectors shall be used only as part of a combination motor controller which provides coordinated motor branch-circuit overload and short-circuit protection, and shall be rated in accordance with the requirements of NFPA 70.

2.7.1 Construction

Motor short-circuit protector bodies shall be constructed of high temperature, dimensionally stable, long life, nonhygroscopic materials. Protectors shall fit special MSCP mounting clips and shall not be interchangeable with any commercially available fuses. Protectors shall have 100 percent one-way interchangeability within the A-Y letter designations. All ratings shall be clearly visible.

2.7.2 Ratings

Voltage ratings shall be not less than the applicable circuit voltage. Letter designations shall be A through Y for motor controller Sizes 0, 1, 2, 3, 4, and 5, with 100,000 amperes interrupting capacity rating. Letter designations shall correspond to controller sizes as follows:

CONTROLLER SIZE	MSCP DESIGNATION
NEMA O	A-N
NEMA 1	A-P
NEMA 2	A-S
NEMA 3	A-U
NEMA 4	A-W
NEMA 5	A-Y

2.8 CONDUIT AND TUBING

2.8.1 Electrical, Zinc-Coated Steel Metallic Tubing (EMT)

UL 797

2.8.2 Electrical Plastic Tubing and Conduit

NEMA TC 2.

2.8.3 Flexible Conduit, Steel and Plastic

General-purpose type, UL 1; liquid tight, UL 360, and UL 1660.

2.8.4 Intermediate Metal Conduit

UL 1242.

2.8.5 PVC Coated Rigid Steel Conduit

NEMA RN 1.

2.8.6 Not Used2.8.7 Rigid Metal Conduit

UL 6.

2.8.8 Rigid Plastic

NEMA TC 2, UL 651 and UL 651A.

2.8.9 Not Used

2.9 CONDUIT AND DEVICE BOXES AND FITTINGS

2.9.1 Boxes, Metallic Outlet

NEMA OS 1 and UL 514C.

2.9.2 Boxes, Nonmetallic, Outlet and Flush-Device Boxes and Covers

NEMA OS 2 and UL 514C.

2.9.3 Boxes, Outlet for Use in Hazardous (Classified) Locations

UL 886.

2.9.4 Boxes, Switch (Enclosed), Surface-Mounted

UL 98.

2.9.5 Fittings for Conduit and Outlet Boxes

UL 514B.

2.9.6 Not Used

2.9.7 Fittings, PVC, for Use with Rigid PVC Conduit and Tubing

UL 514B.

2.10 Not Used2.11 CONNECTORS, WIRE PRESSURE

2.11.1 For Use With Copper Conductors

UL 486A.

2.11.2 For Use With Aluminum Conductors

UL 486B.

2.12 ELECTRICAL GROUNDING AND BONDING EQUIPMENT

UL 467.

2.12.1 Not Used

2.12.2 Ground Bus

The ground bus shall be bare conductor or flat copper in one piece, if practicable.

2.13 Not Used

2.14 FIXTURES, LIGHTING AND FIXTURE ACCESSORIES/COMPONENTS

Standard Drawing 40-06-04 sheets referenced hereinafter and enclosed as an integral part of these specifications, additional fixtures shown on contract drawings, if any, and UL 844 for fixtures to be installed in hazardous (classified) locations. Fixtures, accessories and components, including ballasts, lampholders, lamps, starters and starter holders, shall conform to industry standards specified below.

2.14.1 Fixture, Auxiliary or Emergency

UL 924.

2.14.2 Incandescent Fixture

NEMA LE 4 for ceiling compatibility of recessed fixtures and UL 1571.

2.14.3 Fluorescent

a. Fixture: NEMA LE 4 for ceiling compatibility of recessed fixtures and UL 1570. Fixtures shall be plainly marked for proper lamp and ballast type to identify lamp diameter, wattage, color and start type. Marking shall be readily visible to service personnel, but not visible from normal viewing angles.

b. Ballasts:

(1) Magnetic ballasts shall not be used:.

(2) Electronic Ballast. Electronic ballasts shall consist of a rectifier, high frequency inverter, and power control and regulation circuitry. The ballasts shall be UL listed, Class P, with a Class A sound rating and shall contain no PCBs. Ballasts shall meet 47 CFR 18 for electromagnetic interference and shall not interfere with the operation of other electrical equipment. Design shall withstand line transients per IEEE C62.41, Category A. Unless otherwise indicated, the minimum number of ballasts shall be used to serve each individual fixture, using one, two, three or four lamp ballasts. A single ballast may be used to serve multiple fixtures if they are continuous mounted, factory manufactured for that installation with an integral wireway, and are identically controlled.

(a) Light output regulation shall be +/- 10%.

(b) Voltage input regulation shall be +/- 10%.

(c) Lamp current crest factor shall be no more than 1.6.

(d) Ballast factor shall be not less than 85% nor more than 100%, unless otherwise indicated.

(e) A 60 Hz filter shall be provided. Flicker shall be no more than 10% with any lamp suitable for the ballast.

(f) Ballast case temperature shall not exceed 25 degree Celsius rise above 40 degree Celsius ambient, when tested in accordance with UL 935.

(g) Total harmonic distortion shall be less than 10%.

(h) Power factor shall not be less than 0.95.

(i) Ballasts shall operate at a frequency of 20 kHz or more.

(j) Operating filament voltage shall be 2.5 to 4.5 volts.

(k) Warranty. Three year full warranty including a $10 labor allowance.

(l) Ballast Efficacy Factor (BEF) shall be in accordance with the following table. Ballasts and lamps shall be matching rapid start or instant start as indicated on the following table. If 32W-F32-T8 lamps and ballasts are used, they must be either all rapid start or all instant start.

ELECTRONIC FLUORESCENT BALLAST EFFICACY FACTORS*

LAMP TYPE	TYPE OF STARTER & LAMP	NOMINAL OPERATIONAL INPUT VOLTAGE	NUMBER OF LAMPS	MIN. BALLAST EFFICACY FACTOR
32W F32 T8	rapid or instant start	120 or 277 V	1	2.4
			2	1.4
			3	1.0
			4	0.8

*For ballasts not specifically designed for use with dimming controls

The BEF is calculated using the formula:

BEF = Ballast Factor (in percent) / Power Input

Where Power Input = Total Wattage of Combined Lamps and Ballasts.

c. Lampholders, Starters, and Starter Holders: UL 542.

2.14.4 High-Intensity-Discharge

a. Fixture: NEMA LE 4 for ceiling compatibility of recessed fixtures and UL 1572.

b. Ballasts: ANSI C82.4 for multiple supply types and UL 1029.

2.15 LOW-VOLTAGE FUSES AND FUSEHOLDERS

2.15.1 Fuses, Low Voltage Cartridge Type

NEMA FU 1.

2.15.2 Fuses, High-Interrupting-Capacity, Current-Limiting Type

Fuses, Class G, J, L and CC shall be in accordance with UL 198C.

2.15.3 Fuses, Class K, High-Interrupting-Capacity Type

UL 198D.

2.15.4 Fuses, Class H

UL 198B.

2.15.5 Fuses, Class R

UL 198E.

2.15.6 Fuses, Class T

UL 198H.

2.15.7 Fuses for Supplementary Overcurrent Protection

UL 198G.

2.15.8 Fuses, D-C for Industrial Use

UL 198L.

2.15.9 Fuseholders

UL 512.

2.16 INSTRUMENTS, ELECTRICAL INDICATING

ANSI C39.1.

2.17 MOTORS, AC, FRACTIONAL AND INTEGRAL

Motors, ac, fractional and integral horsepower, 500 hp and smaller shall conform to NEMA MG 1 and UL 1004for motors; NEMA MG 10 for energy management selection of polyphase motors; and UL 674 for use of motors in hazardous (classified) locations.

2.17.1 Rating

The horsepower rating of motors should be limited to no more than 125 percent of the maximum load being served unless a NEMA standard size does not fall within this range. In this case, the next larger NEMA standard motor size should be used.

2.17.2 Motor Efficiencies

All permanently wired polyphase motors of 1 hp or more shall meet the minimum full-load efficiencies as indicated in the following table, and as specified in this specification. Motors of 1 hp or more with open, drip proof or totally enclosed fan cooled enclosures shall be high efficiency type, unless otherwise indicated. Motors provided as an integral part of

motor driven equipment are excluded from this requirement if a minimum seasonal or overall efficiency requirement is indicated for that equipment by the provisions of another section.

Minimum Motor Efficiencies

HP	Std. Efficiency	High Efficiency
1	77.0	85.5
1.5	78.5	85.5
2	78.5	85.5
3	78.5	88.5
5	82.5	88.5
7.5	84.0	90.0
10	85.5	90.0
15	85.5	91.0
20	87.5	92.0
25	88.5	92.0
30	88.5	92.0
40	88.5	92.0
50	89.0	92.5
60	89.0	92.5
75	89.0	95.5
100	90.0	93.5
125	91.0	94.5
150	91.0	94.5
200	91.0	94.5
250	91.0	94.5
300	91.0	94.5
350	91.0	94.5
400	91.0	94.5
500	91.0	94.5

2.18 MOTOR CONTROLS

2.18.1 General

NEMA ICS 1, NEMA ICS 2, NEMA ICS 3 and NEMA ICS 6, and UL 508 and UL 845. Panelboards supplying non-linear loads shall have neutrals sized for 200 percent of rated current.

2.18.2 Motor Starters

Combination starters shall be provided with fusible switches with high-interrupting-capacity current-limiting fuses.

2.18.3 Thermal-Overload Protection

Each motor of 1/8 hp or larger shall be provided with thermal-overload protection. Polyphase motors shall have overload protection in each ungrounded conductor. The overload-protection device shall be provided either integral with the motor or controller, or shall be mounted in a separate enclosure. Unless otherwise specified, the protective device shall be of the manually reset type. Single or double pole tumbler switches specifically designed for alternating-current operation only may be used as manual controllers for single-phase motors having a current rating not in excess of 80 percent of the switch rating.

2.18.4 Low-Voltage Motor Overload Relays

2.18.4.1 General

Thermal overload relays shall conform to NEMA ICS 2 and UL 508. Overload protection shall be provided either integral with the motor or motor controller, and shall be rated in accordance with the requirements of NFPA 70. Standard units shall be used for motor starting times up to 7 seconds. Slow units shall be used for motor starting times from 8 to 12 seconds..

2.18.4.2 Construction

Manual reset type thermal relay shall be bimetallic construction. Automatic reset type thermal relays shall be bimetallic construction. Magnetic current relays shall consist of a contact mechanism and a dash pot mounted on a common frame.

2.18.4.3 Ratings

Voltage ratings shall be not less than the applicable circuit voltage. Trip current ratings shall be established by selection of the replaceable overload device and shall not be adjustable. Where the controller is remotely-located or difficult to reach, an automatic reset, non-compensated overload relay shall be provided. Manual reset overload relays shall be provided otherwise, and at all locations where automatic starting is provided. Where the motor is located in a constant ambient temperature, and the thermal device is located in an ambient temperature that regularly varies by more than minus 18 degrees F, an ambient temperature-compensated overload relay shall be provided.

2.19 PANELBOARDS

Dead-front construction, NEMA PB 1 and UL 67.

2.20 RECEPTACLES

2.20.1 Receptacles and face plates shall be ivory in color.

2.20.2 Not Used

2.20.3 Standard Grade

UL 498.

2.20.4 Ground Fault Interrupters

UL 943, Class A or B.

2.20.5 Not Used

2.20.6 NEMA Standard Receptacle Configurations

NEMA WD 6.

a. Single and Duplex, 15-Ampere and 20-Ampere, 125 Volt

15-ampere, non-locking: NEMA type 5-15R, locking: NEMA type L5-15R,
20-ampere, non-locking: NEMA type 5-20R, locking: NEMA type L5-20R.

b. 15-Ampere, 250 Volt

Two-pole, 3-wire grounding, non-locking: NEMA type 6-15R, locking: NEMA type L6-15R. Three-pole, 4-wire grounding, non-locking: NEMA type 15-15R, locking: NEMA type L15-15R.

c. 20-Ampere, 250 Volt

Two-pole, 3-wire grounding, non-locking: NEMA type 6-20R, locking: NEMA type L6-20R. Three-pole, 4-wire grounding, non-locking: NEMA type 15-20R, locking: NEMA type L15-20R.

d. 30-Ampere, 125/250 Volt

Three-pole, 3-wire, non-locking: NEMA type 10-30R, locking: NEMA type L10-30R. Three-pole, 4-wire grounding, non-locking: NEMA type 14-30R, locking: NEMA type L14-30R.

e. 30-Ampere, 250 Volt

Two-pole, 3-wire grounding, non-locking: NEMA type 6-30R, locking: NEMA type L6-30R. Three-pole, 4-wire grounding, non-locking: NEMA type 15-30R, locking: NEMA type L15-30R.

f. 50-Ampere, 125/250 Volt

Three-pole, 3-wire: NEMA type 10-50R. Three-pole, 4-wire grounding: NEMA type 14-50R.

g. 50-Ampere, 250 Volt

Two-pole, 3-wire grounding: NEMA type 6-50R. Three-pole, 4-wire grounding: NEMA type 15-50R.

2.21 Service Entrance Equipment

UL 869A.

2.22 SPLICE, CONDUCTOR

UL 486C.

2.23 POWER-SWITCHGEAR ASSEMBLIES INCLUDING SWITCHBOARDS

Assemblies shall be metal-enclosed, freestanding general-purpose type in accordance with NEMA PB 2, UL 891, and IEEE ANSI/IEEE C37.20.1 and shall be installed to provide front and rear access. Busses shall be copper or aluminum. Assembly shall be approximately 90 inches high; arrangement of circuit breakers and other items specified shall be as indicated. The withstand rating and interrupting capacity of the switchboards and circuit breakers shall be based on the maximum fault current available.

2.23.1 Circuit Breakers

Circuit breakers shall be stationarymolded-case circuit breakers.

2.23.2 Not Used

2.23.2.1 Not Used

2.23.2.2 Control Switch

A control switch with indicating lights shall be provided for each electrically operated breaker.

2.23.2.3 Control Power Sources

Control buses and control power transformers shall conform to the requirements of Section 16311 MAIN ELECTRIC SUPPLY STATION AND SUBSTATION, where required. Control power shall be 120-volt AC.

2.24 SNAP SWITCHES

UL 20.

2.25 TAPES

2.25.1 Plastic Tape

UL 510.

2.25.2 Rubber Tape

UL 510.

2.26 Not Used

2.26.1 Not Used2.26.2 [Enter Appropriate Subpart Title Here]

2.27 Not Used2.28 Not Used2.29 WATTHOUR/DEMAND METERS, CHECK

ANSI C12.10 for self-contained watthour-demand meter with pulse-initiators for remote monitoring of watt-hour usage. Meter shall be switchboard type..

2.30 Not Used

2.30.1 Not Used2.30.2 [Enter Appropriate Subpart Title Here]2.30.2.1 [Enter Appropriate Subpart Title Here]2.31 WIRING DEVICES

NEMA WD 1 for wiring devices, and NEMA WD 6 for dimensional requirements of wiring devices.

2.32 Not Used

2.33 COORDINATED POWER SYSTEM PROTECTION

Analyses shall be prepared to demonstrate that the equipment and system constructed meet the specified requirements for equipment ratings, coordination, and protection. They shall include a load flow analysis, a fault current analysis, and protective device coordination study. The studies shall be performed by a registered professional engineer with demonstrated experience in power system coordination in the last three years. The Contractor shall provide a list of references complete with points of contact, addresses and telephone numbers. The selection of the engineer is subject to the approval of the Contracting Officer.

2.33.1 Scope of Analyses

The fault current analysis, and protective device coordination study shall begin at: the source bus and extend down to system buses where fault availability is 10,000 amperes (symmetrical) for building/facility 600 volt level distribution buses.

2.33.2 Determination of Facts

The time-current characteristics, features, and nameplate data for each existing protective device shall be determined and documented. The Contractor shall coordinate with the commercial power company for fault current availability at the site.

2.33.3 Single Line Diagram

A single line diagram shall be prepared to show the electrical system buses, devices, transformation points, and all sources of fault current (including generator and motor contributions). A fault-impedance diagram or a computer analysis diagram may be provided. Each bus, device or transformation point shall have a unique identifier. If a fault-impedance diagram is provide, impedance data shall be shown. Locations of switches, breakers, and circuit interrupting devices shall be shown on the diagram together with available fault data, and the device interrupting rating.

2.33.4 Fault Current Analysis

2.33.4.1 Method

The fault current analysis shall be performed in accordance with methods described in IEEE Std 242, and IEEE Std 399.

2.33.4.2 Data

Actual data shall be utilized in fault calculations. Bus characteristics and transformer impedances shall be those proposed. Data shall be documented in the report.

2.33.4.3 Fault Current Availability

Balanced three-phase fault, bolted line-to-line fault, and line-to-ground fault current values shall be provided at each voltage transformation point and at each power distribution bus. The maximum and minimum values of fault available at each location shall be shown in tabular form on the diagram or in the report.

2.33.5 Coordination Study

The study shall demonstrate that the maximum possible degree of selectivity has been obtained between devices specified, consistent with protection of equipment and conductors from damage from overloads and fault conditions. The study shall include a description of the coordination of the protective devices in this project. Provide a written narrative that describes: which devices may operate in the event of a fault at each bus; the logic used to arrive at device ratings and settings; situation where system coordination is not achievable due to device limitations (an analysis of any device curves which order overlap); coordination between upstream and downstream devices; and relay settings. Recommendations to improve or enhance system reliability, and detail where such changes would involve additions or modifications to the contract and cost changes (addition or reduction) shall be provided. Composite coordination plots shall be provided on

log-log graph paper.

2.33.6 Study Report

a. The report shall include a narrative: the analyses performed; the bases and methods used; and the desired method of coordinated protection of the power system.

b. The study shall include descriptive and technical data for existing devices and new protective devices proposed. The data shall include manufacturers published data, nameplate data, and definition of the fixed or adjustable features of the existing or new protective devices.

c. The report shall document utility company data including system voltages, fault MVA, system X/R ratio, time-current characteristic curves, current transformer ratios, and relay device curves and protective device ratings and settings.

d. The report shall contain fully coordinated composite time-current characteristic curves for each bus in the system, as required to ensure coordinated power system protection between protective devices or equipment. The report shall include recommended ratings and settings of all protective devices in tabulated form.

e. The report shall provide the calculations performed for the analyses, including computer analysis programs utilized. The name of the software package, developer, and version number shall be provided.

PART 3 EXECUTION

3.1 GROUNDING

Grounding shall be in conformance with NFPA 70, the contract drawings, and the following specifications.

3.1.1 Not Used

3.1.2 Not Used

3.1.3 Grounding Conductors

A green equipment grounding conductor, sized in accordance with NFPA 70 shall be provided, regardless of the type of conduit. Equipment grounding bars shall be provided in all panelboards. The equipment grounding conductor shall be carried back to the service entrance grounding connection or separately derived grounding connection. All equipment grounding conductors, including metallic raceway systems used as such, shall be bonded or joined together in each wiring box or equipment enclosure. Metallic raceways and grounding conductors shall be checked to assure that they are wired or bonded into a common junction. Metallic boxes and enclosures, if used, shall also be bonded to these grounding conductors by an approved means per NFPA 70. When boxes for receptacles, switches, or other utilization devices are installed, any designated grounding terminal on these devices shall also be bonded to the equipment grounding conductor junction with a short jumper.

3.2 WIRING METHODS

Wiring shall conform to NFPA 70, the contract drawings, and the following specifications. Unless otherwise indicated, wiring shall consist of insulated conductors installed in rigid zinc-coated steel conduit, rigid plastic conduit, electrical metallic tubingand intermediate metal conduit conduit as indicated and/or specified elsewhere. Where cables and wires are installed in cable trays, they shall be of the type permitted by NFPA 70 for use in such applications. Wire fill in conduits shall be based on NFPA 70 for the type of conduit and wire insulations specified. Wire fill in conduits located in Class I or II hazardous areas shall be limited to 25 percent of the cross sectional area of the conduit.

3.2.1 Conduit and Tubing Systems

Conduit and tubing systems shall be installed as indicated. Conduit sizes shown are based on use of copper conductors with insulation types as described in paragraph WIRING METHODS. Minimum size of raceways shall be 1/2 inch. Only metal conduits will be permitted when conduits are required for shielding or other special purposes indicated, or when required by conformance to NFPA 70. Nonmetallic conduit and tubing may be used in damp, wet or corrosive locations when permitted by NFPA 70 and the conduit or tubing system is provided with appropriate boxes, covers, clamps, screws or other appropriate type of fittings. Electrical metallic tubing (EMT) may be installed only within buildings. EMT may be installed in concrete and grout in dry locations. EMT installed in concrete or grout shall be provided with concrete tight fittings. EMT shall not be installed in damp or wet locations, or the air space of exterior masonry cavity walls. Bushings, manufactured fittings or boxes providing equivalent means of protection shall be installed on the ends of all conduits and shall be of the insulating type, where required by NFPA 70. Only UL listed adapters shall be used to connect EMT to rigid metal conduit, cast boxes, and conduit bodies. Aluminum conduit may be used only where installed exposed in dry locations. Nonaluminum sleeves shall be used where aluminum conduit passes through concrete floors and firewalls. Penetrations of above grade floor slabs, time-rated partitions and fire walls shall be firestopped in accordance with Section 07270 FIRESTOPPING. Except as otherwise specified, IMC may be used as an option for rigid steel conduit in areas as permitted by NFPA 70. Raceways shall not be installed under the firepits of boilers and furnaces and shall be kept 6 inches away from parallel runs of flues, steam pipes and hot-water pipes. Raceways shall be concealed within finished walls, ceilings, and floors unless otherwise shown. Raceways crossing structural expansion joints or seismic joints shall be provided with suitable expansion fittings or other suitable means to compensate for the building expansion and contraction and to provide for continuity of grounding. Wiring installed in underfloor raceway system shall be suitable for installation in wet locations.

3.2.1.1 Pull Wires

A pull wire shall be inserted in each empty raceway in which wiring is to be installed if the raceway is more than 50 feet in length and contains more than the equivalent of two 90-degree bends, or where the raceway is more than 150 feet in length. The pull wire shall be of No. 14 AWG zinc-coated steel, or of plastic having not less than 200 pounds per square inch tensile strength. Not less than 10 inches of slack shall be left at each end of the pull wire.

3.2.1.2 Conduit Stub-Ups

Where conduits are to be stubbed up through concrete floors, a short elbow shall be installed below grade to transition from the horizontal run of conduit to a vertical run. A conduit coupling fitting, threaded on the inside shall be installed, to allow terminating the conduit flush with the finished floor. Wiring shall be extended in rigid threaded conduit to equipment, except that where required, flexible conduit may be used 6 inches above the floor. Empty or spare conduit stub-ups shall be plugged flush with the finished floor with a threaded, recessed plug.

3.2.1.3 Below Slab-on-Grade or in the Ground

Electrical wiring below slab-on-grade shall be protected by a conduit system. Conduit passing vertically through slabs-on-grade shall be rigid steel or IMC. Rigid steel or IMC conduits installed below slab-on-grade or in the earth shall be field wrapped with 0.010 inch thick pipe-wrapping plastic tape applied with a 50 percent overlay, or shall have a factory-applied polyvinyl chloride, plastic resin, or epoxy coating system.

3.2.1.4 Installing in Slabs Including Slabs on Grade

Conduit installed in slabs-on-grade shall be rigid steel or IMC. Conduits shall be installed as close to the middle of concrete slabs as practicable without disturbing the reinforcement. Outside diameter shall not exceed 1/3 of the slab thickness and conduits shall be spaced not closer than 3 diameters on centers except at cabinet locations where the slab thickness shall be increased as approved by the Contracting Officer. Where conduit is run parallel to reinforcing steel, the conduit shall be spaced a minimum of one conduit diameter away but not less than one inch from the reinforcing steel.

3.2.1.5 Changes in Direction of Runs

Changes in direction of runs shall be made with symmetrical bends or cast-metal fittings. Field-made bends and offsets shall be made with an approved hickey or conduit-bending machine. Crushed or deformed raceways shall not be installed. Trapped raceways in damp and wet locations shall be avoided where possible. Lodgment of plaster, dirt, or trash in raceways, boxes, fittings and equipment shall be prevented during the course of construction. Clogged raceways shall be cleared of obstructions or shall be replaced.

3.2.1.6 Supports

Metallic conduits and tubing,and the support system to which they are attached, shall be securely and rigidly fastened in place to prevent vertical and horizontal movement at intervals of not more than 10 feet and within 3 feet of boxes, cabinets, and fittings, with approved pipe straps, wall brackets, conduit clamps, conduit hangers, threaded C-clamps, beam clamps, or ceiling trapeze. Loads and supports shall be coordinated with supporting structure to prevent damage or deformation to the structure. Loads shall not be applied to joist bridging. Attachment shall be by wood screws or screw-type nails to wood; by toggle bolts on hollow masonry units; by expansion bolts on concrete or brick; by machine screws, welded threaded studs, heat-treated or spring-steel-tension clamps on steel work. Nail-type nylon anchors or threaded studs driven in by a powder charge and provided with lock washers and nuts may be used in lieu of expansion bolts or machine screws. Raceways or pipe straps shall not be welded to steel structures. Cutting the main reinforcing bars in reinforced concrete beams or joists shall be avoided when drilling holes for support anchors. Holes

drilled for support anchors, but not used, shall be filled. In partitions of light steel construction, sheet-metal screws may be used. Raceways shall not be supported using wire or nylon ties. Raceways shall be independently supported from the structure. Upper raceways shall not be used as a means of support for lower raceways. Supporting means shall not be shared between electrical raceways and mechanical piping or ducts. Cables and raceways shall not be supported by ceiling grids. Except where permitted by NFPA 70, wiring shall not be supported by ceiling support systems. Conduits shall be fastened to sheet-metal boxes and cabinets with two locknuts where required by NFPA 70, where insulating bushings are used, and where bushings cannot be brought into firm contact with the box; otherwise, a single locknut and bushing may be used. Threadless fittings for electrical metallic tubing shall be of a type approved for the conditions encountered. Additional support for horizontal runs is not required when EMT rests on steel stud cutouts.

3.2.1.7 Exposed Raceways

Exposed raceways shall be installed parallel or perpendicular to walls, structural members, or intersections of vertical planes and ceilings. Raceways under raised floors and above accessible ceilings shall be considered as exposed installations in accordance with NFPA 70 definitions.

3.2.1.8 Exposed Risers

Exposed risers in wire shafts of multistory buildings shall be supported by U-clamp hangers at each floor level, and at intervals not to exceed 10 feet.

3.2.1.9 Exposed Lengths of Conduit, Over 600 Volts

Exposed lengths of conduit containing power conductors operating at more than 600 volts shall have two red bands 2 inches wide spaced 8 inches apart painted near each coupling; the intervening space between the red bands shall be painted white, and on the white space the voltage shall be stenciled in black: 120/208 volts.

3.2.1.10 Communications Raceways

Communications raceways indicated shall be installed in accordance with the previous requirements for conduit and tubing and with the additional requirement that no length of run shall exceed 50 feet for 1/2 inch and 3/4 inch sizes, and 100 feet for 1 inch or larger sizes, and shall not contain more than two 90-degree bends or the equivalent. Additional pull or junction boxes shall be installed to comply with these limitations whether or not indicated. Inside radii of bends in conduits of 1 inch size or larger shall not be less than ten times the nominal diameter.

3.2.2 Not Used

3.2.3 Cable Trays

Cable trays shall be supported in accordance with the recommendations of the manufacturer but at no more than 6 foot intervals. Contact surfaces of aluminum connections shall be coated with an antioxidant compound prior to assembly. Adjacent cable tray sections shall be bonded together by connector plates of an identical type as the cable tray sections. The Contractor shall submit the manufacturer's certification that the cable tray system meets all requirements of Article 318 of NFPA 70. The cable

tray shall be installed and grounded in accordance with the provisions of Article 318 of NFPA 70. Data submitted by the Contractor shall demonstrate that the completed cable tray systems will comply with the specified requirements. Cable trays shall terminate 10 inches from both sides of smoke and fire partitions. Conductors run through smoke and fire partitions shall be installed in 4 inch rigid steel conduits with grounding bushings, extending 12 inches beyond each side of the partitions. The installation shall be sealed to preserve the smoke and fire rating of the partitions. Penetrations shall be firestopped in accordance with Section 07840 FIRESTOPPING.

3.2.4 Cables and Conductors

Installation shall conform to the requirements of NFPA 70. Covered, bare or insulated conductors of circuits rated over 600 volts shall not occupy the same equipment wiring enclosure, cable, or raceway with conductors of circuits rated 600 volts or less.

3.2.4.1 Sizing

Unless otherwise noted, all sizes are based on copper conductors and the insulation types indicated. Sizes shall be not less than indicated. Branch-circuit conductors shall be not smaller than No. 12 AWG. Conductors for branch circuits of 120 volts more than 100 feet long and of 277 volts more than 230 feet long, from panel to load center, shall be no smaller than No. 10 AWG. Class 1 remote control and signal circuit conductors shall be not less than No. 14 AWG. Class 2 remote control and signal circuit conductors shall be not less than No. 16 AWG. Class 3 low-energy, remote-control and signal circuits shall be not less than No. 22 AWG.

3.2.4.2 Not Used

3.2.4.3 Not Used

3.2.4.4 Not Used

3.2.4.5 Cable Splicing

Splices shall be made in an accessible location. Crimping tools and dies shall be approved by the connector manufacturer for use with the type of connector and conductor.

a. Copper Conductors, 600 Volt and Under: Splices in conductors No. 10 AWG and smaller diameter shall be made with an insulated, pressure-type connector. Splices in conductors No. 8 AWG and larger diameter shall be made with a solderless connector and insulated with tape or heat-shrink type insulating material equivalent to the conductor insulation.

b. Aluminum Conductors, 600 Volt and Under: Splices of aluminum conductors shall be made with a UL listed, solderless, compression-type, aluminum bodied connector, stamped for AL or AL/CU. Aluminum contact surfaces of conductors shall be cleaned with a wire brush and covered with anti-oxidant joint compound prior to making of connections. Any excess joint compound shall be wiped away after installing the connector. Insulate the connection with tape or heat-shrink type insulating material equivalent to the conductor insulation.

c. Greater Than 600 Volt: Cable splices shall be made in accordance with the cable manufacturer's recommendations and Section 16375 ELECTRICAL DISTRIBUTION SYSTEM, UNDERGROUND.

3.2.4.6 Conductor Identification and Tagging

Power, control, and signal circuit conductor identification shall be provided within each enclosure where a tap, splice, or termination is made. Where several feeders pass through a common pull box, the feeders shall be tagged to indicate clearly the electrical characteristics, circuit number, and panel designation. Phase conductors of low voltage power circuits shall be identified by color coding. Phase identification by a particular color shall be maintained continuously for the length of a circuit, including junctions.

a. Color coding shall be provided for service, feeder, branch, and ground conductors. Color shall be green for grounding conductors and white for neutrals; except where neutrals of more than one system are installed in the same raceway or box, other neutral shall be white with colored (not green) stripe. The color coding for 3-phase and single-phase low voltage systems shall be as follows:

   120/208-volt, 3-phase: Black(A), red(B), and blue(C).

b. Conductor phase and voltage identification shall be made by color-coded insulation for all conductors smaller than No. 6 AWG. For conductors No. 6 AWG and larger, identification shall be made by color-coded insulation, or conductors with black insulation may be furnished and identified by the use of half-lapped bands of colored electrical tape wrapped around the insulation for a minimum of 3 inches of length near the end, or other method as submitted by the Contractor and approved by the Contracting Officer.

c. Control and signal circuit conductor identification shall be made by color-coded insulated conductors, plastic-coated self-sticking printed markers, permanently attached stamped metal foil markers, or equivalent means as approved. Control circuit terminals of equipment shall be properly identified. Terminal and conductor identification shall match that shown on approved detail drawings. Hand lettering or marking is not acceptable.

3.3 BOXES AND SUPPORTS

Boxes shall be provided in the wiring or raceway systems where required by NFPA 70 for pulling of wires, making connections, and mounting of devices or fixtures. Pull boxes shall be furnished with screw-fastened covers. Indicated elevations are approximate, except where minimum mounting heights for hazardous areas are required by NFPA 70. Unless otherwise indicated, boxes for wall switches shall be mounted 48 inches above finished floors. Switch and outlet boxes located on opposite sides of fire rated walls shall be separated by a minimum horizontal distance of 24 inches. Provide HILTI firestop putty pad CP 617(L) around all electrical boxes and penetrations separated by less than 24 horizontal inches in common walls, and all electrical boxes and penetrations in fire rated walls. The total combined area of all box openings in fire rated walls shall not exceed 100 square inches per 100 square feet. Maximum box areas for individual boxes in fire rated walls vary with the manufacturer and shall not exceed the

maximum specified for that box in UL Elec Const Dir. Only boxes listed in UL Elec Const Dir shall be used in fire rated walls.

3.3.1 Box Applications

Each box shall have not less than the volume required by NFPA 70 for number of conductors enclosed in box. Boxes for metallic raceways, 4 by 4 inch nominal size and smaller, shall be of the cast-metal hub type when located in normally wet locations, when flush and surface mounted on outside of exterior surfaces, or when located in hazardous areas. Cast-metal boxes installed in wet locations and boxes installed flush with the outside of exterior surfaces shall be gasketed. Boxes for mounting lighting fixtures shall be not less than 4 inches square, or octagonal, except smaller boxes may be installed as required by fixture configuration, as approved. Cast-metal boxes with 3/32 inch wall thickness are acceptable. Large size boxes shall be NEMA 1 or as shown. Boxes in other locations shall be sheet steel except that aluminum boxes may be used with aluminum conduit, and nonmetallic boxes may be used with nonmetallic conduit and tubing or nonmetallic sheathed cable system, when permitted by NFPA 70. Boxes for use in masonry-block or tile walls shall be square-cornered, tile-type, or standard boxes having square-cornered, tile-type covers.

3.3.2 Brackets and Fasteners

Boxes and supports shall be fastened to wood with wood screws or screw-type nails of equal holding strength, with bolts and metal expansion shields on concrete or brick, with toggle bolts on hollow masonry units, and with machine screw or welded studs on steel work. Threaded studs driven in by powder charge and provided with lockwashers and nuts, or nail-type nylon anchors may be used in lieu of expansion shields, or machine screws. Penetration of more than 1-1/2 inches into reinforced-concrete beams or more than 3/4 inch into reinforced-concrete joists shall avoid cutting any main reinforcing steel. The use of brackets which depend on gypsum wallboard or plasterboard for primary support will not be permitted. In partitions of light steel construction, bar hangers with 1 inch long studs, mounted between metal wall studs or metal box mounting brackets shall be used to secure boxes to the building structure. When metal box mounting brackets are used, additional box support shall be provided on the side of the box opposite the brackets. This additional box support shall consist of a minimum 12 inch long section of wall stud, bracketed to the opposite side of the box and secured by two screws through the wallboard on each side of the stud. Metal screws may be used in lieu of the metal box mounting brackets.

3.3.3 Mounting in Walls, Ceilings, or Recessed Locations

In walls or ceilings of concrete, tile, or other non-combustible material, boxes shall be installed so that the edge of the box is not recessed more than 1/4 inch from the finished surface. Boxes mounted in combustible walls or ceiling material shall be mounted flush with the finished surface. The use of gypsum or plasterboard as a means of supporting boxes will not be permitted. Boxes installed for concealed wiring shall be provided with suitable extension rings or plaster covers, as required. The bottom of boxes installed in masonry-block walls for concealed wiring shall be mounted flush with the top of a block to minimize cutting of the blocks, and boxes shall be located horizontally to avoid cutting webs of block. Separate boxes shall be provided for flush or recessed fixtures when required by the fixture terminal operating temperature, and fixtures shall be readily removable for access to the boxes unless ceiling access panels

are provided.

3.3.4 Installation in Overhead Spaces

In open overhead spaces, cast-metal boxes threaded to raceways need not be separately supported except where used for fixture support; cast-metal boxes having threadless connectors and sheet metal boxes shall be supported directly from the building structure or by bar hangers. Hangers shall not be fastened to or supported from joist bridging. Where bar hangers are used, the bar shall be attached to raceways on opposite sides of the box and the raceway shall be supported with an approved type fastener not more than 24 inches from the box.

3.4 DEVICE PLATES

One-piece type device plates shall be provided for all outlets and fittings. Plates on unfinished walls and on fittings shall be of zinc-coated sheet steel, cast-metal, or impact resistant plastic having rounded or beveled edges. Plates on finished walls shall be of steel with baked enamel finish or impact-resistant plastic and with color as selected by architect. Screws shall be of metal with countersunk heads, in a color to match the finish of the plate. Plates shall be installed with all four edges in continuous contact with finished wall surfaces without the use of mats or similar devices. Plaster fillings will not be permitted. Plates shall be installed with an alignment tolerance of 1/16 inch. The use of sectional-type device plates will not be permitted. Plates installed in wet locations shall be gasketed and provided with a hinged, gasketed cover, unless otherwise specified.

3.5 RECEPTACLES

3.5.1 Single and Duplex, 15 or 20-ampere, 125 volt

Single and duplex receptacles shall be rated 20 amperes, 125 volts, two-pole, three-wire, grounding type with polarized parallel slots. Bodies shall be of as indicated by government, and supported by mounting strap having plaster ears. Contact arrangement shall be such that contact is made on two sides of an inserted blade. Receptacle shall be side- or back-wired with two screws per terminal. The third grounding pole shall be connected to the metal mounting yoke. Switched receptacles shall be the same as other receptacles specified except that the ungrounded pole of each suitable receptacle shall be provided with a separate terminal. Only the top receptacle of a duplex receptacle shall be wired for switching application. Receptacles with ground fault circuit interrupters shall have the current rating as indicated, and shall be UL Class A type unless otherwise shown. Ground fault circuit protection shall be provided as required by NFPA 70 and as indicated on the drawings. Shall be ivory in color.

3.5.2 Not Used

3.5.3 Floor Outlets

Floor outlets shall be adjustable and each outlet shall consist of a cast-metal body with threaded openings for conduits, adjustable ring, and cover plate with 1/2 inch or 3/4 inch threaded flush plug. Each telephone outlet shall consist of a horizontal cast housing with a receptacle as specified. Gaskets shall be used where necessary to ensure a watertight installation. Plugs with installation instructions shall be

delivered to the Contracting Officer at the job site for capping outlets upon removal of service fittings. Shall be identical to model used in Phase II.

3.5.4 Weatherproof Applications

Weatherproof receptacles shall be suitable for the environment, damp or wet as applicable, and the housings shall be labeled to identify the allowable use. Receptacles shall be marked in accordance with UL 514A for the type of use indicated; "Damp locations", "Wet Locations", "Wet Location Only When Cover Closed". Assemblies shall be installed in accordance with the manufacturer's recommendations.

3.5.4.1 Damp Locations

Receptacles in damp locations shall be mounted in an outlet box with a gasketed, weatherproof, cast-metal cover plate (device plate, box cover) and a gasketed cap (hood, receptacle cover) over each receptacle opening. The cap shall be either a screw-on type permanently attached to the cover plate by a short length of bead chain or shall be a flap type attached to the cover with a spring loaded hinge.

3.5.4.2 Wet Locations

Receptacles in wet locations shall be installed in an assembly rated for such use whether the plug is inserted or withdrawn, unless otherwise indicated. In a duplex installation, the receptacle cover shall be configured to shield the connections whether one or both receptacles are in use. Assemblies which utilize a self-sealing boot or gasket to maintain wet location rating shall be furnished with a compatible plug at each receptacle location and a sign notifying the user that only plugs intended for use with the sealing boot shall be connected during wet conditions.

3.5.5 Receptacles, 15-Ampere, 250-Volt

Receptacles, 15-ampere, 250-volt, shall be single two-pole, three-wire, grounding type with bodies of as indicated by government to match color of switch handles in the same room or to harmonize with the color of the respective wall], phenolic compound supported by mounting yoke having plaster ears. The third grounding pole shall be connected to the metal yoke. Each receptacle shall be provided with a mating cord-grip plug.

3.5.6 Receptacles, 20-Ampere, 250-Volt

Receptacles, single, 20-ampere, 250-volt, shall be as indicated by government molded plastic, two-pole, three-wire or three-pole, four-wire, grounding type complete with appropriate mating cord-grip plug.

3.5.7 Receptacles, 30-Ampere, 125/250-Volt

Receptacles, single, 30-ampere, 125/250-volt, shall be molded-plastic, three-pole, four-wire, grounding type, complete with appropriate mating cord-grip type attachment plug. Each dryer receptacle shall be furnished with a non-detachable power supply cord for connection to the electric clothes dryer. The cord shall be an angle-type 36 inch length of Type SRD range and dryer cable with three No. 10 AWG conductors.

3.5.8 Receptacles, 30-Ampere, 250-Volt

Receptacles, single, 30-ampere, 250-volt, shall be molded-plastic, three-pole, three-wire type, complete with appropriate mating cord-grip plug.

3.5.9 Receptacles, 50-Ampere, 125/250-Volt

Receptacles, single 50-ampere, 125/250-volt, shall be flush, molded plastic, three-pole, four-wire, grounding type. Each range receptacle shall be furnished with a nondetachable power supply cord for connection to the electric range. The cord shall be an angle-type 36 inch length of SRD range and dryer cable with one No. 8 and two No. 6 AWG conductors.

3.5.10 Receptacles, 50-Ampere, 250-Volt

Receptacles, single, 50-ampere, 250-volt, shall be flush molded plastic, three-pole, three-wire type, complete with appropriate mating cord-grip plug.

3.6 WALL SWITCHES

Wall switches shall be of the totally enclosed tumbler type. The wall switch handle and switch plate color shall be ivory. Wiring terminals shall be of the screw type or of the solderless pressure type having suitable conductor-release arrangement. Not more than two switches shall be installed in a single-gang position. Switches shall be rated 20-ampere 120-volt for use on alternating current only. Pilot lights indicated shall consist of yoke-mounted candelabra-base sockets rated at 75 watts, 125 volts, and fitted with glass or plastic jewels. A clear 6-watt lamp shall be furnished and installed in each pilot switch. Jewels for use with switches controlling motors shall be green, and jewels for other purposes shall be red. Dimming switches shall be solid-state flush mounted, sized for the loads.

3.7 SERVICE EQUIPMENT

Service-disconnecting means shall be of the POWER SWITCHGEAR ASSEMBLIES INCLUDING SWITCHBOARDS with an external handle for manual operation. When service disconnecting means is a part of an assembly, the assembly shall be listed as suitable for service entrance equipment. Enclosures shall be sheet metal with hinged cover for surface mounting unless otherwise indicated.

3.8 PANELBOARDS AND LOADCENTERS

Circuit breakers and switches used as a motor disconnecting means shall be capable of being locked in the open position. Door locks shall be keyed alike. Nameplates shall be as approved. Directories shall be typed to indicate loads served by each circuit and mounted in a holder behind a clear protective covering. Busses shall be copper or aluminum.

3.8.1 Panelboards

Panelboards shall be circuit breaker equipped as indicated on the drawings.

3.9 FUSES

Equipment provided under this contract shall be provided with a complete set of properly rated fuses when the equipment manufacturer utilize fuses in the manufacture of the equipment, or if current-limiting fuses are

required to be installed to limit the ampere-interrupting capacity of circuit breakers or equipment to less than the maximum available fault current at the location of the equipment to be installed. Fuses shall have a voltage rating of not less than the phase-to-phase circuit voltage, and shall have the time-current characteristics required for effective power system coordination. Time-delay and non-time-delay options shall be as specified.

3.9.1 Cartridge Fuses; Noncurrent-Limiting Type

Cartridge fuses of the noncurrent-limiting type shall be Class H, nonrenewable, dual element, time lag type and shall have interrupting capacity of 10,000 amperes. At 500 percent current, cartridge fuses shall not blow in less than 10 seconds.

3.9.2 Cartridge Fuses; Current-Limiting Type

Cartridge fuses, current-limiting type, Class J or RK1 shall have tested interrupting capacity not less than 100,000 amperes. Fuse holders shall be the type that will reject all Class H fuses.

3.9.3 Not Used

3.9.4 Motor and Transformer Circuit Fuses

Motor, motor controller, transformer, and inductive circuit fuses shall be Class RK1 or RK5, current-limiting, time-delay with 200,000 amperes interrupting capacity.

3.10 Not Used

3.11 Not Used

3.12 MOTORS

Each motor shall conform to the hp and voltage ratings indicated, and shall have a service factor and other characteristics that are essential to the proper application and performance of the motors under conditions shown or specified. Three-phase motors for use on 3-phase 208-volt systems shall have a nameplate rating of 200 volts. Unless otherwise specified, all motors shall have open frames, and continuous-duty classification based on a 40 degree C ambient temperature reference. Polyphase motors shall be squirrel-cage type, having normal-starting-torque and low-starting-current characteristics, unless other characteristics are specified in other sections of these specifications or shown on contract drawings. The Contractor shall be responsible for selecting the actual horsepower ratings and other motor requirements necessary for the applications indicated. When electrically driven equipment furnished under other sections of these specifications materially differs from the design, the Contractor shall make the necessary adjustments to the wiring, disconnect devices and branch-circuit protection to accommodate the equipment actually installed.

3.13 MOTOR CONTROL

Each motor or group of motors requiring a single control shall be provided under other sections of these specifications with a suitable controller and

devices that will perform the functions as specified for the respective motors. Each motor of 1/8 hp or larger shall be provided with thermal-overload protection. Polyphase motors shall have overload protection in each ungrounded conductor. The overload-protection device shall be provided either integral with the motor or controller, or shall be mounted in a separate enclosure. Unless otherwise specified, the protective device shall be of the manually reset type. Single or double pole tumbler switches specifically designed for alternating-current operation only may be used as manual controllers for single-phase motors having a current rating not in excess of 80 percent of the switch rating. Automatic control devices such as thermostats, float or pressure switches may control the starting and stopping of motors directly, provided the devices used are designed for that purpose and have an adequate horsepower rating. When the automatic-control device does not have such a rating, a magnetic starter shall be used, with the automatic-control device actuating the pilot-control circuit. When combination manual and automatic control is specified and the automatic-control device operates the motor directly, a double-throw, three-position tumbler or rotary switch shall be provided for the manual control; when the automatic-control device actuates the pilot control circuit of a magnetic starter, the latter shall be provided with a three-position selector switch marked MANUAL-OFF-AUTOMATIC. Connections to the selector switch shall be such that only the normal automatic regulatory control devices will be bypassed when the switch is in the Manual position; all safety control devices, such as low- or high-pressure cutouts, high-temperature cutouts, and motor-overload protective devices, shall be connected in the motor-control circuit in both the Manual and the Automatic positions of the selector switch. Control circuit connections to any MANUAL-OFF-AUTOMATIC switch or to more than one automatic regulatory control device shall be made in accordance with wiring diagram approved by the Contracting Officer unless such diagram is included on the drawings. All controls shall be 120 volts or less unless otherwise indicated.

3.13.1 Not Used

3.13.2 Not Used

3.13.3 Contacts

Unless otherwise indicated, contacts in miscellaneous control devices such as float switches, pressure switches, and auxiliary relays shall have current and voltage ratings in accordance with NEMA ICS 2 for rating designation B300.

3.13.4 Not Used

3.14 MOTOR-DISCONNECT MEANS

Each motor shall be provided with a disconnecting means when required by NFPA 70 even though not indicated. For single-phase motors, a single or double pole toggle switch, rated only for alternating current, will be acceptable for capacities less than 30 amperes, provided the ampere rating of the switch is at least 125 percent of the motor rating. Switches shall disconnect all ungrounded conductors.

3.15 Not Used

3.16 LAMPS AND LIGHTING FIXTURES

Ballasted fixtures shall have ballasts which are compatible with the specific type and rating of lamps indicated and shall comply with the applicable provisions of the publications referenced.

3.16.1 Lamps

Lamps of the type, wattage, and voltage rating indicated shall be delivered to the project in the original cartons and installed in the fixtures just prior to the completion of the project.

3.16.1.1 Incandescent

Incandescent lamps shall be for 125-volt operation unless otherwise indicated.

3.16.1.2 Fluorescent

Fluorescent lamps for electronic ballasts shall be as indicated.

3.16.1.3 High-Intensity-Discharge

High-intensity-discharge lamps shall be the high-pressure sodium type unless otherwise indicated, shown, or approved.

3.16.2 Fixtures

Fixtures shall be as shown and shall conform to the following specifications and shall be as indicated in the fixture schedule, which accompany and form a part of this specification for the types indicated. Illustrations shown on these sheets are indicative of the general type desired and are not intended to restrict selection to fixtures of any particular manufacturer. Fixtures of similar designs and equivalent energy efficiency, light distribution and brightness characteristics, and of equal finish and quality will be acceptable if approved.

3.16.2.1 Accessories

Accessories such as straps, mounting plates, nipples, or brackets shall be provided for proper installation. Open type fluorescent fixtures with exposed lamps shall have a wire-basket type guard.

3.16.2.2 Suspended Fixtures

Suspended fixtures shall be provided with swivel hangers in order to ensure a plumb installation. Pendants, rods, or chains 4 feet or longer excluding fixture, shall be braced to limit swinging. Bracing shall be 3 directional, 120 degrees apart. Single unit suspended fluorescent fixtures shall have twin-stem hangers. Multiple unit or continuous-row fluorescent units shall have a tubing or stem for wiring at one point, and a tubing or rod suspension provided for each length of chassis including one at each end. Maximum distance between adjacent tubing or stems shall be 10 feet. Rods shall be of not less than 3/16 inch diameter. Flexible raceway shall be installed to each fixture from an overhead junction box. Fixture to fixture wiring installation is allowed only when fixtures are installed end to end in a continuous run.

3.16.2.3 Ceiling Fixtures

Ceiling fixtures shall be coordinated with and suitable for installation in, on, or from the suspended ceiling provided under other sections of these specifications. Installation and support of fixtures shall be in accordance with the NFPA 70 and manufacturer's recommendations. Recessed fixtures shall have adjustable fittings to permit alignment with ceiling panels. Recessed fixtures installed in fire-resistive type of suspended ceiling construction shall have the same fire rating as the ceiling or shall be provided with fireproofing boxes having materials of the same fire rating as the ceiling panels, in conformance with UL Elec Const Dir. Surface-mounted fixtures shall be suitable for fastening to the structural support for ceiling panels.

3.16.2.4 Sockets

Sockets of industrial, strip, and other open type fluorescent fixtures shall be of the type requiring a forced movement along the longitudinal axis of the lamp for insertion and removal of the lamp.

3.16.3 Not Used

3.17 Not Used

3.18 EQUIPMENT CONNECTIONS

Wiring not furnished and installed under other sections of the specifications for the connection of electrical equipment as indicated on the drawings shall be furnished and installed under this section of the specifications. Connections shall comply with the applicable requirements of paragraph WIRING METHODS. Flexible conduits 6 feet or less in length shall be provided to all electrical equipment subject to periodic removal, vibration, or movement and for all motors. All motors shall be provided with separate grounding conductors. Liquid-tight conduits shall be used in damp or wet locations.

3.18.1 Motors and Motor Control

Motors, motor controls, and motor control centers shall be installed in accordance with NFPA 70, the manufacturer's recommendations, and as indicated. Wiring shall be extended to motors, motor controls, and motor control centers and terminated.

3.18.2 Installation of Government-Furnished Equipment

Wiring shall be extended to the equipment and terminated.

3.18.3 Not Used

3.19 CIRCUIT PROTECTIVE DEVICES

The Contractor shall calibrate, adjust, set and test each new adjustable circuit protective device to ensure that they will function properly prior to the initial energization of the new power system under actual operating conditions.

3.20 PAINTING AND FINISHING

Field-applied paint on exposed surfaces shall be provided under Section 09900 PAINTING, GENERAL.

3.21 Not Used

3.22 FIELD TESTING

Field testing shall be performed in the presence of the Contracting Officer. The Contractor shall notify the Contracting Officer 14 days prior to conducting tests. The Contractor shall furnish all materials, labor, and equipment necessary to conduct field tests. The Contractor shall perform all tests and inspection recommended by the manufacturer unless specifically waived by the Contracting Officer. The Contractor shall maintain a written record of all tests which includes date, test performed, personnel involved, devices tested, serial number and name of test equipment, and test results. All field test reports will be signed and dated by the Contractor.

3.22.1 Safety

The Contractor shall provide and use safety devices such as rubber gloves, protective barriers, and danger signs to protect and warn personnel in the test vicinity. The Contractor shall replace any devices or equipment which are damaged due to improper test procedures or handling.

3.22.2 Not Used

3.22.3 Not Used

3.22.4 Cable Tests

The Contractor shall be responsible for identifying all equipment and devices that could be damaged by application of the test voltage and ensuring that they have been properly disconnected prior to performing insulation resistance testing. An insulation resistance test shall be performed on all low and medium voltage cables after the cables are installed in their final configuration and prior to energization. The test voltage shall be 500 volts DC applied for one minute between each conductor and ground and between all possible combinations of conductors. The minimum value of resistance shall be:

R in megohms = (rated voltage in kV + 1) x 1000/(length of cable in feet)

Each cable failing this test shall be repaired or replaced. The repaired cable system shall then be retested until failures have been eliminated.

3.22.4.1 Not Used
3.22.4.2 Low Voltage Cable Tests

a. Continuity test.

b. Insulation resistance test.

3.22.5 Not Used

3.22.6 Motor Tests

a. Phase rotation test to ensure proper directions.

b. Operation and sequence of reduced voltage starters.

c. High potential test on each winding to ground.

d. Insulation resistance of each winding to ground.

e. Vibration test.

f. Dielectric absorption test on motor [and starter].

3.22.7 Not Used

3.22.8 Not Used

3.22.9 Circuit Breaker Tests

The following field tests shall be performed on all switchboardcircuit breakers.

3.22.9.1 Not Used

3.22.9.2 Not Used

3.22.9.3 Circuit Breakers, Molded Case

a. Insulation resistance test phase-to-phase, all combinations.

b. Insulation resistance test phase-to-ground, each phase.

c. Closed breaker contact resistance test.

d. Manual operation of the breaker.

3.23 OPERATING TESTS

After the installation is completed, and at such time as the Contracting Officer may direct, the Contractor shall conduct operating tests for approval. The equipment shall be demonstrated to operate in accordance with the specified requirements. An operating test report shall be submitted in accordance with paragraph FIELD TEST REPORTS.

3.24 FIELD SERVICE

3.24.1 Onsite Training

The Contractor shall conduct a training course for the operating staff as designated by the Contracting Officer. The training period shall consist of a total of 8 hours of normal working time and shall start after the system is functionally completed but prior to final acceptance tests. The course instruction shall cover pertinent points involved in operating, starting, stopping, servicing the equipment, as well as all major elements of the operation and maintenance manuals..

3.24.2 Installation Engineer

After delivery of the equipment, the Contractor shall furnish one or more field engineers, regularly employed by the equipment manufacturer to supervise the installation of equipment, assist in the performance of the onsite tests, oversee initial operations, and instruct personnel as to the

operational and maintenance features of the equipment.

3.25 ACCEPTANCE

inal acceptance of the facility will not be given until the Contractor has successfully completed all tests and after all defects in installation, material or operation have been corrected.

-- End of Section --

This page was intentionally left blank for duplex printing.

SECTION TABLE OF CONTENTS

DIVISION 16 - ELECTRICAL

SECTION 16528

EXTERIOR LIGHTING INCLUDING SECURITY AND CCTV APPLICATIONS

02/95

PART 1 GENERAL

1.1 REFERENCES
1.2 SYSTEM DESCRIPTION
1.2.1 Lighting System
1.2.2 Not Used
1.2.3 Electrical Requirements
1.2.4 Power Line Surge Protection
1.2.5 Not Used
1.2.6 Not Used
1.2.7 Nameplates
1.2.8 Standard Products
1.3 CORROSION PROTECTION
1.3.1 Aluminum Materials
1.3.2 Ferrous Metal Materials
1.3.2.1 Hardware
1.3.2.2 Equipment
1.3.3 Finishing
1.4 SUBMITTALS

PART 2 PRODUCTS

2.1 STANDARD PRODUCT
2.2 Not Used
2.3 CABLE
2.3.1 Insulated Cable
2.4 Not Used
2.5 CABLE SPLICES AND CONNECTORS
2.6 Not Used
2.7 Not Used
2.8 CONDUIT, DUCTS AND FITTINGS
2.8.1 Conduit, Rigid Steel
2.8.2 Not Used
2.8.3 Conduit Fittings and Outlets
2.8.3.1 Boxes, Metallic Outlets
2.8.3.2 Boxes, Nonmetallic, Outlet and Flush-Device Boxes and Covers
2.8.3.3 Boxes, Outlet for Use in Hazardous (Classified) Locations
2.8.3.4 Boxes, Switch (Enclosed), Surface Mounted
2.8.3.5 Fittings for Conduit and Outlet Boxes
2.8.3.6 Not Used
2.8.3.7 Fittings, PVC, for Use with Rigid PVC Conduit and Tubing
2.8.4 Non-Metallic Duct
2.9 Not Used
2.10 GROUND RODS
2.11 POLES
2.11.1 Not Used

2.11.2 Not Used
2.11.3 Not Used
2.11.4 Not Used
2.11.5 Not Used
2.11.6 Anchor Bolts
2.12 Not Used
2.13 Not Used
2.14 Not Used
2.14.1 Interior Enclosures
2.15 ILLUMINATION
2.15.1 General Lighting
2.16 LAMPS AND BALLASTS, HIGH INTENSITY DISCHARGE (HID) SOURCES
2.16.1 High-Pressure Sodium
2.16.2 Not Used
2.16.3 Metal-Halide
2.17 Not Used
2.18 Not Used
2.19 LUMINAIRE COMPONENTS
2.20 LIGHTING CONTROL EQUIPMENT
2.20.1 Not Used
2.20.2 Timer Control Switches
2.20.3 Not Used
2.20.4 Not Used
2.20.5 Magnetic Contactor
2.21 PHOTOMETRIC DISTRIBUTION CLASSIFICATION
2.22 LUMINAIRES, FLOODLIGHTING
2.22.1 HID and Incandescent
2.23 FIXTURES
2.23.1 Accessories
2.23.2 Not Used
2.23.3 In-Line Fuse

PART 3 EXECUTION

3.1 GENERAL
3.1.1 Current Site Conditions
3.1.2 Not Used
3.2 Not Used
3.3 PREVENTION OF CORROSION
3.3.1 Aluminum
3.3.2 Steel Conduits
3.3.3 Cold Galvanizing
3.4 CABLE INSTALLATION
3.4.1 Splices
3.5 Not Used
3.6 Not Used
3.7 Not Used
3.8 Not Used
3.9 DUCT LINES
3.9.1 Not Used
3.9.2 Not Used
3.9.3 Not Used
3.9.4 Not Used
3.9.5 Installation of Couplings
3.9.5.1 Plastic Duct
3.10 Not Used
3.11 Not Used
3.12 LIGHTING
3.12.1 Lamps

3.12.2 Fixture Installation
3.12.2.1 Accessories
3.12.2.2 In-Line Fuses
3.13 Not Used
3.14 LIGHTING CONTROL SYSTEM
3.14.1 Not Used
3.14.2 Time Control Switches
3.14.3 Magnetic Contactors
3.15 GROUNDING
3.15.1 Ground Rods and Pole Butt Electrodes
3.15.2 Items to be Grounded
3.16 TESTS
3.16.1 Not Used
3.16.2 Operating Test
3.16.3 Ground Resistance Measurements

-- End of Section Table of Contents --

SECTION 16528

EXTERIOR LIGHTING INCLUDING SECURITY AND CCTV APPLICATIONS
02/95

PART 1 GENERAL

1.1 REFERENCES

The publications listed below form a part of this specification to the extent referenced. The publications are referred to in the text by basic designation only.

AMERICAN ASSOCIATION OF STATE HIGHWAY AND TRANSPORTATION OFFICIALS (AASHTO)

AASHTO LTS-3	(1994) Standard Specifications for Structural Supports for Highway Signs, Luminaires and Traffic Signals

AMERICAN NATIONAL STANDARDS INSTITUTE (ANSI)

ANSI C78.1350	(1990) Electric Lamps - 400-Watt, 100-Volt, S51 Single-Ended High-Pressure Sodium Lamps
ANSI C78.1351	(1989) Electric Lamps - 250-Watt, 100-Volt S50 Single-Ended High-Pressure Sodium Lamps
ANSI C78.1352	(1990) Electric Lamps - 1000-Watt, 250-Volt, S52 Single-Ended High-Pressure Sodium Lamps
ANSI C78.1355	(1989) Electric Lamps - 150-Watt, 55-Volt S55 High-Pressure Sodium Lamps
ANSI C78.1375	(1990; R 1996) 400-Watt, M59 Single-Ended Metal-Halide Lamps
ANSI C78.1376	(1990; R 1996) 1000-Watt, M47 Metal-Halide Lamps
ANSI C80.1	(1995) Rigid Steel Conduit - Zinc Coated
ANSI C82.4	(1992) Ballasts for High-Intensity-Discharge and Low-Pressure Sodium Lamps (Multiple-Supply Type)
ANSI C119.1	(1986) Sealed Insulated Underground Connector Systems Rated 600 Volts
ANSI C136.2	(1985) Luminaires, Voltage Classification of
ANSI C136.3	(1989) Luminaire Attachments - for Roadway Lighting Equipment

ANSI C136.6	(1990) Roadway Lighting Equipment - Metal Heads and Reflector Assemblies - Mechanical and Optical Interchangeability
ANSI C136.9	(1990) Roadway Lighting Equipment - Socket Support Assemblies for Use in Metal Heads - Mechanical Interchangeability
ANSI C136.11	(1988; R 1994) Multiple Sockets for Roadway Lighting Equipment
ANSI C136.15	(1986) High-Intensity-Discharge and Low-Pressure Sodium Lamps in Luminaires - Field Identification

AMERICAN SOCIETY FOR TESTING AND MATERIALS (ASTM)

ASTM A 123	(1989a) Zinc (Hot-Dip Galvanized) Coatings on Iron and Steel Products
ASTM A 153	(1996) Zinc Coating (Hot-Dip) on Iron and Steel Hardware
ASTM B 117	(1995) Operating Salt Spray (Fog) Apparatus
ASTM D 1654	(1992) Evaluation of Painted or Coated Specimens Subjected to Corrosive Environments

ILLUMINATING ENGINEERING SOCIETY OF NORTH AMERICA (IESNA)

IESNA RP-8	(1983; R 1993) Roadway Lighting

INSTITUTE OF ELECTRICAL AND ELECTRONICS ENGINEERS (IEEE)

IEEE C2	(1997) National Electrical Safety Code
IEEE C62.41	(1991) Surge Voltages in Low-Voltage AC Power Circuits
IEEE Std 81	(1983) Guide for Measuring Earth Resistivity, Ground Impedance, and Earth Surface Potentials of a Ground System

NATIONAL ELECTRICAL MANUFACTURERS ASSOCIATION (NEMA)

NEMA 250	(1991) Enclosures for Electrical Equipment (1000 Volts Maximum)
NEMA ICS 1	(1993) Industrial Control and Systems
NEMA ICS 2	(1993) Industrial Control and Systems Controllers, Contactors, and Overload Relays Rated Not More Than 2,000 Volts AC or 750 Volts DC Assemblies
NEMA ICS 6	(1993) Industrial Control and Systems, Enclosures

NEMA OS 1	(1989) Sheet-Steel Outlet Boxes, Device Boxes, Covers, and Box Supports
NEMA OS 2	(1986; Errata Aug 1986; R 1991) Nonmetallic Outlet Boxes, Device Boxes, Covers and Box Supports
NEMA TC 6	(1990) PVC and ABS Plastic Utilities Duct for Underground Installation
NEMA TC 9	(1990) Fittings for ABS and PVC Plastic Utilities Duct for Underground Installation

NATIONAL FIRE PROTECTION ASSOCIATION (NFPA)

NFPA 70	(1996; Errata) National Electrical Code

UNDERWRITERS LABORATORIES (UL)

UL 6	(1997) Rigid Metal Conduit
UL 44	(1997; Rev Aug 1997) Rubber-Insulated Wires and Cables
UL 98	(1994; Rev Oct 1995) Enclosed and Dead-Front Switches
UL 467	(1993; Rev Aug 1996) Grounding and Bonding Equipment
UL 486A	(1991; Rev Oct 1991) Wire Connectors and Soldering Lugs for Use with Copper Conductors
UL 486B	(1997; Rev Jun 1997) Wire Connections for Use with Aluminum Conductors
UL 514A	(1996) Metallic Outlet Boxes
UL 514B	(1996) Fittings for Conduit and Outlet Boxes
UL 514C	(1996) Nonmetallic Outlet Boxes, Flush-Device Boxes, and Covers
UL 651	(1995; Rev Jan 1997) Schedule 40 and 80 Rigid PVC Conduit
UL 651A	(1995; Rev Sep 1996) Type EB and A Rigid PVC Conduit and HDPE Conduit
UL 854	(1996; Rev May 1996) Service-Entrance Cables
UL 886	(1994; Rev thru Jan 1997) Outlet Boxes and Fittings for Use in Hazardous (Classified) Locations

UL 1029	(1994; Rev Sep 1995) High-Intensity-Discharge Lamp Ballasts
UL 1449	(1985; Errata Apr 1986) Transient Voltage Surge Suppressors
UL 1571	(1991; Rev thru Mar 1995) Incandescent Lighting Fixtures
UL 1572	(1995; Rev thru Jun 1997) High Intensity Discharge Lighting Fixtures

1.2 SYSTEM DESCRIPTION

1.2.1 Lighting System

The lighting system shall be configured as specified and shown. The system shall include all fixtures, hardware, poles, cables, connectors, adapters and appurtenances needed to provide a fully functional lighting system.

1.2.2 Not Used

1.2.3 Electrical Requirements

The equipment shall operate from a voltage source as shown, plus or minus 10 percent, and 60 Hz, plus or minus 2 percent.

1.2.4 Power Line Surge Protection

Transient voltage surge suppressors shall be provided for all electronic equipment. Surge suppressors shall meet the requirements of IEEE C62.41, and be UL listed as having been tested in accordance with UL 1449. Surge suppressor ratings shall be 120/208 volts rms, operating voltage; 60 Hz; 1-phase3-phase; 4 wire with ground; transient suppression voltage (peak let-through-voltage) of 350 volts]. Fuses shall not be used as surge suppression.

1.2.5 Not Used

1.2.6 Not Used

1.2.7 Nameplates

Each major component of equipment shall have a nonferrous metal or engraved plastic nameplate which shall show, as a minimum, the manufacturer's name and address, the catalog or style number, the electrical rating in volts, and the capacity in amperes or watts.

1.2.8 Standard Products

Materials and equipment shall be standard products of manufacturer regularly engaged in the manufacture of such products. Items of equipment shall essentially duplicate equipment that has been in satisfactory use at least 2 years prior to bid opening.

1.3 CORROSION PROTECTION

1.3.1 Aluminum Materials

Aluminum shall not be used in contact with earth or concrete. Where aluminum conductors are connected to dissimilar metal, fittings conforming to UL 486B shall be used.

1.3.2 Ferrous Metal Materials

1.3.2.1 Hardware

Ferrous metal hardware shall be hot-dip galvanized in accordance with ASTM A 153 and ASTM A 123.

1.3.2.2 Equipment

Equipment and component items, including but not limited to metal poles and ferrous metal luminaires not hot-dip galvanized or porcelain enamel finished, shall be provided with corrosion-resistant finishes which shall withstand 120 hours of exposure to the salt spray test specified in ASTM B 117 without loss of paint or release of adhesion of the paint primer coat to the metal surface in excess of 1/16 inch from the test mark. The scribed test mark and test evaluation shall have a rating of not less than 7 in accordance with TABLE 1, (procedure A) of ASTM D 1654. Cut edges or otherwise damaged surfaces of hot-dip galvanized sheet steel or mill galvanized sheet steel shall be coated with a zinc rich paint conforming to the manufacturer's standard.

1.3.3 Finishing

Painting required for surfaces not otherwise specified and finish painting of items only primed at the factory, shall be as specified in Section 09900 PAINTING, GENERAL.

1.4 SUBMITTALS

Government approval is required for submittals with a "GA" designation; submittals having an "FIO" designation are for information only. The following shall be submitted in accordance with section 01330 SUBMITTAL PROCEDURES:

SD-01 Data

Equipment and Materials; GA.

Data published by the manufacturer of each item on the list of equipment and material, to permit verification that the item proposed is of the correct size, properly rated or applied, or is otherwise suitable for the application and fully conforms to the requirements specified.

Spare Parts; FIO.

Spare parts data for each item of material and equipment specified, after approval of detail drawings for materials and equipment, and not later than 4 months before the date of beneficial occupancy. The data shall include a complete list of parts, special tools, and supplies, with current unit prices and sources of supply.

SD-04 Drawings

Lighting System; GA1.

Detail drawings for the complete system and for poles, lighting fixtures,handholes, and controllers,. Detail drawings for precast handholes shall include a design analysis to determine that strength is equivalent to indicated cast-in-place concrete handholes. Drawings shall indicate bonding method for concrete encasement. Drawings shall include design calculations showing adequate strength of screw foundations.
As-Built Drawings; GA1.

Final as-built drawings shall be finished drawings on mylar or vellum and shall be delivered with the final test report.

Operating Test; GA.

Test procedures and reports for the Operating Test. After receipt by the Contractor of written approval of the test procedures, the Contractor shall schedule the tests. The final test procedures report shall be delivered after completion of the tests.

Ground Resistance Measurements; GA1.

The measured resistance to ground of each separate grounding installation, indicating the location of the rods, the resistance of the soil in ohms per millimeter and the soil conditions at the time the measurements were made. The information shall be in writing.

SD-19 Operation and Maintenance Manuals

Lighting System; GA.

A draft copy of the operation and maintenance manuals, prior to beginning the tests for use during site testing. Final copies of the manuals as specified bound in hardback, loose-leaf binders, within 30 days after completing the field test. The draft copy used during site testing shall be updated with any changes required, prior to final delivery of the manuals. Each manual's contents shall be identified on the cover. The manual shall include names, addresses, and telephone numbers of each subcontractor installing equipment and systems, and nearest service representatives for each item of equipment for each system. The manuals shall have a table of contents and tab sheets. Tab sheets shall be placed at the beginning of each chapter or section and at the beginning of each appendix. The final copies delivered after completion of the field test shall include modifications made during installation checkout and acceptance.

PART 2 PRODUCTS

2.1 STANDARD PRODUCT

Material and equipment shall be the standard product of a manufacturer regularly engaged in the manufacture of the product and shall essentially duplicate items that have been in satisfactory use for at least 2 years prior to bid opening. Items of the same classification shall be identical including equipment, assemblies, parts, and components.

2.2 Not Used

2.3 CABLE

The Contractor shall provide all wire and cable not indicated as government

furnished equipment. Wire and cable components shall be able to withstand the jobsite environment for a minimum of 20 years.

2.3.1 Insulated Cable

Cable shall be type USE conforming to UL 854, with copper conductors and type RHW or XHHW insulation conforming to UL 44, and shall include green ground conductor. Cable shall be provided with insulation of a thickness not less than that given in column A of TABLE 15.1 of UL 854. Cable shall be rated 600 volts. Parts of the cable system such as splices and terminations shall be rated not less than 600 volts. The size and number of conductors and the number of cables shall be as indicated. Conductors larger than No. 8 AWG shall be stranded.

2.4 Not Used

2.5 CABLE SPLICES AND CONNECTORS

Cable splices and connectors shall conform to UL 486A. Underground splices and connectors shall also conform to the requirements of ANSI C119.1.

2.6 Not Used

2.7 Not Used

2.8 CONDUIT, DUCTS AND FITTINGS

2.8.1 Conduit, Rigid Steel

Rigid steel conduit shall conform to ANSI C80.1 and UL 6.

2.8.2 Not Used

2.8.3 Conduit Fittings and Outlets

2.8.3.1 Boxes, Metallic Outlets

NEMA OS 1 and UL 514A.

2.8.3.2 Boxes, Nonmetallic, Outlet and Flush-Device Boxes and Covers

NEMA OS 2 and UL 514C.

2.8.3.3 Boxes, Outlet for Use in Hazardous (Classified) Locations

UL 886.

2.8.3.4 Boxes, Switch (Enclosed), Surface Mounted

UL 98.

2.8.3.5 Fittings for Conduit and Outlet Boxes

UL 514B.

2.8.3.6 Not Used

2.8.3.7 Fittings, PVC, for Use with Rigid PVC Conduit and Tubing

UL 514B.

2.8.4 Non-Metallic Duct

Non-metallic duct lines and fittings utilized for underground installation shall be suitable for the application. Duct shall be thick-wall, single, round-bore type. Material of one type shall be used. Acrylonitrile-butadiene-styrene (ABS) duct shall conform to NEMA TC 6and NEMA TC 9. High-density conduit shall conform to UL 651A. Schedule 40 polyvinyl chloride (PVC) shall conform to UL 651. Plastic utility duct and fittings manufactured without a UL label or listing shall be provided with a certification as follows: "The materials are suitable for use with 167 degree F wiring. No reduction of properties in excess of that specified for materials with a UL label or listing will be experienced if samples of the finished product are operated continuously under the normal conditions that produce the highest temperature in the duct."

2.9 Not Used

2.10 GROUND RODS

Ground rods shall be of copper clad steel conforming to UL 467 not less than 3/4 inch in diameter by 10 feet in length of the sectional type driven full length into earth.

2.11 POLES

Poles shall be the pole manufacturer's standard design for supporting the number of fixtures indicated. Poles shall be designed for a wind velocity of 100 mph at the base of the pole, for a wind gust factor of 1.3, and for the height and drag factors recommended by AASHTO LTS-3. The effective projected area of luminaires and other pole-mounted devices shall be taken into account in pole design. Poles shall have grounding provisions. The type of pole shaft material provided shall not be mixed on any project. Grounding connection shall be provided near the bottom of each metal pole and at each concrete pole anchor base. Scratched, stained, chipped, or dented poles shall not be installed.

2.11.1 Not Used

2.11.2 Not Used
2.11.3 Not Used

2.11.4 Not Used

2.11.5 Not Used

2.11.6 Anchor Bolts

Anchor bolts shall be the pole manufacturer's standard, but not less than necessary to meet the pole wind and ice loading, herein and other specified design requirements.

2.12 Not Used

2.13 Not Used

2.14 Not Used

2.14.1 Interior Enclosures

Enclosures to house lighting equipment in an interior environment shall meet the requirements of a NEMA 1 enclosure as defined in NEMA 250.

2.15 ILLUMINATION

2.15.1 General Lighting

Luminaires, ballasts, lamps, and control devices required for general area and parking lot lighting shall be as indicated on the drawings.

2.16 LAMPS AND BALLASTS, HIGH INTENSITY DISCHARGE (HID) SOURCES

2.16.1 High-Pressure Sodium

Lamps shall conform to ANSI C78.1350, ANSI C78.1351, ANSI C78.1352 or ANSI C78.1355 as required. Ballasts shall conform to ANSI C82.4, or UL 1029. High-pressure sodium lamps shall be clear.

2.16.2 Not Used

2.16.3 Metal-Halide

Lamps shall be made by a manufacturer with not less than 5 years experience in making metal-halide lamps. Metal-halide lamps shall conform to ANSI C78.1375 or ANSI C78.1376. Ballasts shall conform to ANSI C82.4 or UL 1029.

2.17 Not Used

2.18 Not Used

2.19 LUMINAIRE COMPONENTS

Luminaire components shall conform to the following: attachments, ANSI C136.3; voltage classification, ANSI C136.2; field identification marking, ANSI C136.15; interchangeability, ANSI C136.6 and ANSI C136.9; and sockets, ANSI C136.11.

2.20 LIGHTING CONTROL EQUIPMENT

2.20.1 Not Used

2.20.2 Timer Control Switches

Astronomic dial type arranged to turn "ON" at sunset, and turn "OFF" at a pre-determined time between 2030 hours and 230 hours or sunrise, automatically changing the settings each day in accordance with seasonal changes of sunset and sunrise shall be provided. A switch rated 240 volts, having battery backed electronic clock to maintain accurate time for a minimum of 7 hours following a power failure shall be provided. A time switch with a manual on-off bypass switch shall be provided. Housing for the time switch shall be a surface mounted, NEMA 1 (indoor) enclosure conforming to NEMA ICS 6.

2.20.3 Not Used

2.20.4 Not Used

2.20.5 Magnetic Contactor

Magnetic contactors shall be mechanically held, electrically operated, and shall conform to NEMA ICS 1 and NEMA ICS 2. The contactor shall be suitable for 208 volts, 3 phase, 60 Hz. Coil voltage shall be 120 volts. Maximum continuous ampere rating and number of poles shall be as indicated on drawings. Enclosures for contactors mounted indoors shall be NEMA ICS 6, Type 1. Each contactor shall be provided with a spare, normally open auxiliary contact. Terminal lugs shall be coordinated with the wire size.

2.21 PHOTOMETRIC DISTRIBUTION CLASSIFICATION

Photometrics shall conform to IESNA RP-8.

2.22 LUMINAIRES, FLOODLIGHTING

2.22.1 HID and Incandescent

HID lighting fixtures shall conform to UL 1572. Incandescent lighting fixtures shall conform to UL 1571.

2.23 FIXTURES

Standard fixtures shall be as indicated on the drawings. Illustrations shown on these sheets or on the drawings are indicative of the general type desired and are not intended to restrict selection to fixtures of any particular manufacturer. Fixtures of similar design, equivalent light distribution and brightness characteristics, equal finish and quality will be acceptable as approved.

2.23.1 Accessories

Accessories such as straps, mounting plates, nipples, or brackets shall be provided for proper installation.

2.23.2 Not Used

2.23.3 In-Line Fuse

An in-line fuse shall be provided for each fixture, and shall consist of a fuse and a UL approved waterproof fuse holder rated at 30 amperes, 600 volts, with insulated boots. Fuse rating shall be 250 volts.

PART 3 EXECUTION

3.1 GENERAL

The Contractor shall install all system components, including government furnished equipment, and appurtenances in accordance with the manufacturer's instructions, IEEE C2, and contract documents, and shall furnish necessary hardware, fixtures, cables, wire, connectors, interconnections, services, and adjustments required for a complete and operable system.

3.1.1 Current Site Conditions

The Contractor shall verify that site conditions are in agreement with the design package. The Contractor shall report all changes to the site or conditions that will affect performance of the system to the Government. The Contractor shall not take any corrective action without written

permission from the Government.

3.1.2 Not Used

3.2 Not Used

3.3 PREVENTION OF CORROSION

3.3.1 Aluminum

Aluminum shall not be used in contact with earth or concrete, and where connected to dissimilar metal, shall be protected by approved fittings and treatment.

3.3.2 Steel Conduits

Steel conduits shall not be installed within concrete slabs-on-grade. Steel conduits installed underground or under slabs-on-grade, or penetrating slabs-on-grade, shall be field wrapped with 0.010 inch thick pipe-wrapping plastic tape applied with a 50 percent overlap, or shall have a factory-applied plastic resin, epoxy coating. Zinc coating may be omitted from steel conduit which has a factory-applied epoxy coating.

3.3.3 Cold Galvanizing

Field welds and/or brazing on factory galvanized boxes, enclosures, conduits, etc. shall be coated with a cold galvanized paint containing at least 95 percent zinc by weight.

3.4 CABLE INSTALLATION

Cable and all parts of the cable system such as splices and terminations shall be rated not less than 600 volts. The size and number of conductors and the number of cables shall be as indicated. Conductors larger than No. 8 AWG shall be stranded. Each circuit shall be identified by means of fiber or nonferrous metal tags, or approved equal, in each handhole and at each terminal.

3.4.1 Splices

Splices below grade shall be made with nonpressure-filled resin systems using transparent, interlocking, self-venting, longitudinally split plastic molds. Splices above grade shall be made with sealed insulated pressure connectors and shall provide insulation and jacket equal to that of the cable. In order to prevent moisture from entering the splice, jackets shall be cut back to expose the required length of insulation between the jacket and the tapered end of the insulation.

3.5 Not Used

3.6 Not Used

3.7 Not Used

3.8 Not Used

3.9 DUCT LINES

3.9.1 Not Used

3.9.2 Not Used

3.9.3 Not Used

3.9.4 Not Used

3.9.5 Installation of Couplings

Joints in each type of duct shall be made up in accordance with the manufacturer's recommendation for the particular type of duct and coupling selected and as approved.

3.9.5.1 Plastic Duct

Duct joints shall be made by brushing a plastic solvent on insides of plastic coupling fittings and on outsides of duct ends. Each duct and fitting shall then be slipped together with a quick 1/4 turn to set the joint tightly.

3.10 Not Used

3.11 Not Used

3.12 LIGHTING

3.12.1 Lamps

Lamps of the proper type, wattage, and voltage rating shall be delivered to the project in the original containers and installed in the fixtures just before completion of the project.

3.12.2 Fixture Installation

Standard fixtures shall be installed as indicated on drawings. Illustrations shown on these sheets or on the drawings are indicative of the general type desired and are not intended to restrict selection of fixtures to any particular manufacturer. Fixtures of similar design, equivalent light-distribution and brightness characteristics, and equal finish and quality will be acceptable as approved.

3.12.2.1 Accessories

Accessories such as straps, mounting plates, nipples, or brackets shall be installed as required for proper installation.

3.12.2.2 In-Line Fuses

An in-line fuse shall be provided for each fixture.

3.13 Not Used3.14 LIGHTING CONTROL SYSTEM

3.14.1 Not Used

3.14.2 Time Control Switches

Switches shall be installed with not less than four 1/4 inch bolts. The use of sheet metal screws will not be allowed.

3.14.3 Magnetic Contactors

Terminal lugs shall be coordinated with the wire size. Switches shall be securely fastened to the supporting structure or wall using not less than four 1/4 inch bolts. The use of sheet metal screws will not be allowed.

3.15 GROUNDING

Grounding shall be in conformance with NFPA 70, the contract drawings, and the following. Grounding conductors shall be soft-drawn, stranded copper. Ground rods shall be driven into the earth so that after the installation is complete, the top of the ground rod will be approximately 1 foot below finished grade, except in handholes. Butt grounds shall not be used.

3.15.1 Ground Rods and Pole Butt Electrodes

The resistance to ground shall be measured using the fall-of-potential method described in IEEE Std 81. The maximum resistance of a [driven ground rodpole butt electrode shall not exceed 25 ohms under normally dry conditions. Whenever the required ground resistance is not met, additional electrodes shall be provided interconnected with grounding conductors, to achieve the specified ground resistance. The additional electrodes shall be up to three, 10 feet long rods spaced a minimum of 10 feet apart, 5/8 nch] in diameter, driven perpendicular to grade. If the resultant resistance exceeds 25 ohms measured not less than 48 hours after rainfall, the Contracting Officer shall be notified immediately. Connections below grade shall be fusion welded. Connections above grade shall be fusion welded or shall use UL 467 approved connectors.

3.15.2 Items to be Grounded

Ground conductors, metallic conduits, junction boxes, and noncurrent-carrying metallic parts of equipment shall be grounded. Connections above grade shall be made with solderless connectors, and those below grade shall be made by a fusion-welding process.

3.16 TESTS

3.16.1 Not Used3.16.2 Operating Test

After the installation is completed and at such time as the Contracting Officer may direct, the Contractor shall conduct an operating test for approval. The equipment shall be demonstrated to operate in accordance with the requirements specified. The test shall be performed in the presence of the Contracting Officer. The Contractor shall furnish instruments and personnel required for the test, and the Government will furnish the necessary electric power.

3.16.3 Ground Resistance Measurements

The resistance to ground shall be measured by the fall-of-potential method described in IEEE Std 81.

The contractor shall maintain a separate set of drawings, elementary diagrams and wiring diagrams of the lighting to be used for "as-built" drawings. This set shall be accurately kept up to date by the Contractor with all changes and additions to the lighting system. In addition to being complete and accurate, this set of drawings shall be kept neat and shall not be used for installation purposes. Upon completion of the as-built drawings, a representative of the Government will review the

as-built work with the Contractor. If the as-built work is not complete, the Contractor will be so advised and shall complete the work as required.

-- End of Section --

This page was intentionally left blank for duplex printing.

SECTION TABLE OF CONTENTS

DIVISION 16 - ELECTRICAL

SECTION 16710

PREMISES DISTRIBUTION SYSTEM

04/97

PART 1 GENERAL

1.1 REFERENCES
1.2 SYSTEM DESCRIPTION
1.3 ENVIRONMENTAL REQUIREMENTS
1.4 QUALIFICATIONS
1.4.1 Minimum Contractor Qualifications
1.4.2 Manufacturer
1.5 SUBMITTALS
1.6 DELIVERY AND STORAGE
1.7 OPERATION AND MAINTENANCE MANUALS
1.8 RECORD KEEPING AND DOCUMENTATION
1.8.1 Cables
1.8.2 Termination Hardware

PART 2 PRODUCTS

2.1 MATERIALS AND EQUIPMENT
2.2 UNSHIELDED TWISTED PAIR CABLE SYSTEM (Telephone)
2.2.1 Cable Insulation
2.2.2 Riser Cable
2.2.3 Horizontal Cable
2.2.4 Connecting Hardware
2.2.4.1 Telecommunications Outlets
2.2.4.2 Patch Panels
2.2.4.3 Patch Cords
2.2.4.4 Terminal Blocks
2.3 SHIELDED TWISTED PAIR CABLE SYSTEM (Data)
2.3.1 Backbone Cable
2.3.2 Horizontal Cable
2.3.3 Connecting Hardware
2.3.3.1 Connectors
2.3.3.2 Patch Panels
2.3.3.3 Patch Cords
2.4 COAXIAL CABLE SYSTEM
2.4.1 Riser and Backbone Cable
2.4.2 Horizontal Distribution Cable
2.4.3 Connecting Hardware
2.4.3.1 Connectors
2.4.3.2 Patch Panels
2.5 Not Used
2.6 Base Unit Cabinets
2.6.1 Not Used
2.6.2 Not Used
2.6.3 Not Used
2.6.4 Not Used

2.6.5 Wall Mounted Cabinets
2.7 EQUIPMENT MOUNTING BACKBOARD
2.8 TELECOMMUNICATIONS OUTLET BOXES

PART 3 EXECUTION

3.1 INSTALLATION
3.1.1 Horizontal Distribution Cable
3.1.2 Riser and Backbone Cable
3.1.3 Telecommunications Outlets
3.1.3.1 Faceplates
3.1.3.2 Cables
3.1.3.3 Pull Cords
3.1.4 Terminal Blocks
3.1.5 Unshielded Twisted Pair Patch Panels
3.2 TERMINATION
3.2.1 Unshielded Twisted Pair Cable
3.2.2 Shielded Twisted Pair Cable
3.2.3 Coaxial Cable
3.3 GROUNDING
3.4 ADDITIONAL MATERIALS
3.5 ADMINISTRATION AND LABELING
3.5.1 Labeling
3.5.1.1 Labels
3.5.1.2 Cable
3.5.1.3 Termination Hardware
3.6 TESTING
3.6.1 Unshielded Twisted Pair Tests
3.6.2 Category 5 Circuits
3.6.3 Shielded Twisted Pair
3.6.4 Coaxial Cable

-- End of Section Table of Contents --

SECTION 16710

PREMISES DISTRIBUTION SYSTEM
04/97

PART 1 GENERAL

1.1 REFERENCES

The publications listed below form a part of this specification to the extent referenced. The publications are referred to in the text by basic designation only.

ELECTRONIC INDUSTRIES ASSOCIATION (EIA)

EIA ANSI/TIA/EIA-568-A	(1995) Commercial Building Telecommunications Cabling Standard
EIA ANSI/TIA/EIA-569	(1996) Commercial Building Standard for Telecommunications Pathways and Spaces
EIA ANSI/TIA/EIA-606	(1993) Administration Standard for the Telecommunications Infrastructure of Commercial Buildings
EIA ANSI/TIA/EIA-607	(1994) Commercial Building Grounding and Bonding Requirements for Telecommunications
EIA TSB 67	(1995) Transmission Performance Specifications for Field Testing of Unshielded Twisted Pair Cabling Systems

IBM PUBLICATION CORPORATION (IBM)

IBM GA27-3361-07	(1987) LAN Cabling System - Planning and Installation
IBM GA27-3773-0	(1987) Cabling System Technical Interface Specifications

INSULATED CABLE ENGINEERS ASSOCIATION (ICEA)

ICEA S-80-576	(1994) Communications Wire and Cable for Wiring of Premises

NATIONAL FIRE PROTECTION ASSOCIATION (NFPA)

NFPA 70	(1996; Errata) National Electrical Code

UNDERWRITERS LABORATORY (UL)

UL 50	(1995; Rev thru Oct 1997) Enclosures for Electrical Equipment

1.2 SYSTEM DESCRIPTION

The premises distribution system shall consist of inside-plant horizontal, riser, and backbone cables and connecting hardware to transport telephone and data (including LAN) signals between equipment items in a building.

1.3 ENVIRONMENTAL REQUIREMENTS

Connecting hardware shall be rated for operation under ambient conditions of 32 to 140 degrees F and in the range of 0 to 95 percent relative humidity, noncondensing.

1.4 QUALIFICATIONS

1.4.1 Minimum Contractor Qualifications

All work under this section shall be performed by and all equipment shall be furnished and installed by a certified Telecommunications Contractor, hereafter referred to as the Contractor. With the exception of furnishing and installing conduit, electrical boxes, and pullwires, this work shall not be done by the Electrical Contractor. The Contractor shall have the following qualifications in Telecommunications Systems installation:

a. Contractor shall have a minimum of 3 years experience in the application, installation and testing of the specified systems and equipment.

b. All supervisors and installers assigned to the installation of this system or any of its components shall have factory certification from each equipment manufacturer that they are qualified to install and test the provided products. General electrical trade staff (electricians) shall not be used for the installation of the premises distribution system cables and associated hardware.

c. All installers assigned to the installation of this system or any of its components shall have a minimum of 3 years experience in the installation of the specified copper and fiber optic cable and components.

1.4.2 Manufacturer

The equipment and hardware provided under this contract shall be manufactured by Leviton and model numbers shall be identified to models used in existing Phase II building..

1.5 SUBMITTALS

Government approval is required for submittals with a "GA" designation; submittals having an "FIO" designation are for information only. The following shall be submitted in accordance with Section 01330 SUBMITTAL PROCEDURES:

SD-01 Data

Spare Parts; FIO.

Lists of spare parts, tools, and test equipment for each different item of material and equipment specified, after approval of detail drawings, not later than 2 months prior to the date of beneficial occupancy. The data shall include a complete list of parts and supplies, with current unit

prices and source of supply, and a list of spare parts recommended for stocking.

SD-04 Drawings

Premises Distribution System; GA1.

Detail drawings including a complete list of equipment and material. Detail drawings shall contain complete wiring and schematic diagrams and other details required to demonstrate that the system has been coordinated and will function properly as a system. Drawings shall include vertical riser diagrams, equipment rack details, elevation drawings of telecommunications closet walls, outlet face plate details for all outlet configurations, sizes and types of all cables, conduits, and cable trays. Drawings shall show proposed layout and anchorage of equipment and appurtenances, and equipment relationship to other parts of the work including clearance for maintenance and operation.

Record Drawings; GA.

Record drawings for the installed wiring system infrastructure per EIA ANSI/TIA/EIA-606. The drawings shall show the location of all cable terminations and location and routing of all backbone and horizontal cables. The identifier for each termination and cable shall appear on the drawings.

SD-06 Instructions

Manufacturer's Recommendations; GA.

Where installation procedures, or any part thereof, are required to be in accordance with the recommendations of the manufacturer of the material being installed, printed copies of these recommendations, prior to installation shall be provided. Installation of the item will not be allowed to proceed until the recommendations are received and approved.

SD-08 Statements

Test Plan; GA.

Test plan defining the tests required to ensure that the system meets technical, operational and performance specifications, 60 days prior to the proposed test date. The test plan must be approved before the start of any testing. The test plan shall identify the capabilities and functions to be tested, and include detailed instructions for the setup and execution of each test and procedures for evaluation and documentation of the results.

Qualifications; GA.

The qualifications of the Manufacturer, Contractor, and the Installer to perform the work specified herein. This shall include proof of the minimum qualifications specified herein.

SD-09 Reports

Test Reports; FIO.

Test reports in booklet form with witness signatures verifying execution of tests. Test results will also be provided on 3-1/2 inch diskettes in M.S.

Word format. Reports shall show the field tests performed to verify compliance with the specified performance criteria. Test reports shall include record of the physical parameters verified during testing. Test reports shall be submitted within 14 days after completion of testing.

SD-13 Certificates

Premises Distribution System; FIO.

Written certification that the premises distribution system complies with the EIA ANSI/TIA/EIA-568-A, EIA ANSI/TIA/EIA-569, and EIA ANSI/TIA/EIA-606 standards.

Materials and Equipment; FIO.

Where materials or equipment are specified to conform, be constructed or tested to meet specific requirements, certification that the items provided conform to such requirements. Certification by a nationally recognized testing laboratory that a representative sample has been tested to meet the requirements, or a published catalog specification statement to the effect that the item meets the referenced standard, will be acceptable as evidence that the item conforms. Compliance with these requirements does not relieve the Contractor from compliance with other requirements of the specifications.

Installers; GA1.

The Contractor shall submit certification that all the installers are factory certified to install and test the provided products.

SD-18 Records

Record Keeping and Documentation; GA.

Documentation on cables and termination hardware in accordance with EIA ANSI/TIA/EIA-606.

1.6 DELIVERY AND STORAGE

Equipment delivered and placed in storage shall be stored with protection from the weather, humidity and temperature variation, dirt and dust or other contaminants.

1.7 OPERATION AND MAINTENANCE MANUALS

Commercial off the shelf manuals shall be furnished for operation, installation, configuration, and maintenance for all products provided as a part of the premises distribution system. Specification sheets for all cable, connectors, and other equipment shall be provided.

1.8 RECORD KEEPING AND DOCUMENTATION

1.8.1 Cables

A record of all installed cable shall be provided in hard copy formatand on electronic media using Windows based computer cable management software per EIA ANSI/TIA/EIA-606. .

1.8.2 Termination Hardware

A record of all installed patch panels and outlets shall be provided in hard copy format and on electronic media using Windows based computer cable management software per EIA ANSI/TIA/EIA-606.

PART 2 PRODUCTS

2.1 MATERIALS AND EQUIPMENT

Materials and equipment shall be the standard products of a manufacturer regularly engaged in the manufacture of the products and shall be the manufacturer's latest standard design that has been in satisfactory use for at least 1 year prior to installation. Materials and equipment shall conform to the respective publications and other requirements specified below and to the applicable requirements of NFPA 70.

2.2 UNSHIELDED TWISTED PAIR CABLE SYSTEM (Telephone)

2.2.1 Cable Insulation

For each individual Category 5 cable, the insulation, material used on each pair shall be exactly the same in all physical, electrical, and chemical respects. The use of Teflon insulated, plenum rated Category 5 cable is acceptable for both plenum and non-plenum applications. If Teflon insulated plenum rated cable is used by the Contractor, it shall be Type 4x0, where all four pairs are Teflon insulated. Type 3x1 and 2x2 are not acceptable.

2.2.2 Riser Cable

Riser cable shall meet the requirements of ICEA S-80-576 and EIA ANSI/TIA/EIA-568-A for Category 3 100-ohm unshielded twisted pair cable. Cable shall be label-verified. Cable jacket shall be factory marked at regular intervals indicating verifying organization and performance level. Conductors shall be solid untinned copper 24 AWG. Cable shall be rated CMP per NFPA 70.

2.2.3 Horizontal Cable

Horizontal cable shall meet the requirements of EIA ANSI/TIA/EIA-568-A for Category 5 horizontal cable. Cable shall be label-verified. Cable jacket shall be factory marked at regular intervals indicating verifying organization and performance level. Conductors shall be solid untinned copper 24 AWG. Cable shall be rated CMP per NFPA 70.

2.2.4 Connecting Hardware

Connecting and cross-connecting hardware shall be the same category as the cable it serves. Hardware shall be in accordance with and EIA ANSI/TIA/EIA-568-A.

2.2.4.1 Telecommunications Outlets

Wall and desk outlet plates shall come equipped with two modular jacks, with the top or left jack labeled "voice" and the bottom or right jack labeled "data". Modular jacks shall be the same category as the cable they terminate and shall meet the requirements of EIA ANSI/TIA/EIA-568-A. Modular jack pin/pair configuration shall be T568B per EIA ANSI/TIA/EIA-568-A as required by government. Modular jacks shall be keyed

or unkeyed as required by government. Faceplates shall be provided and shall be impact resistant plastic, color as specified by architect. Mounting plates shall be provided for system furniture and shall match the system furniture in color. Outlet assemblies used in the premises distribution system shall consist of modular jacks assembled into both simplex and duplex outlet assemblies in single or double gang covers as indicated on the drawings. The modular jacks shall conform to the requirements of EIA ANSI/TIA/EIA-568-A, Category 5.

2.2.4.2 Patch Panels

Patch panels shall consist of eight-position modular jacks, with rear mounted type 110 insulation displacement connectors, arranged in rows or columns on wall mounted] panels. Jack pin/pair configuration shall be T568B per EIA ANSI/TIA/EIA-568-A as required by Government. Jacks shall be keyed or unkeyed as as indicated by Government. Panels shall be labeled with alphanumeric x-y coordinates and be provided with labeling space.

2.2.4.3 Patch Cords

Patch cords shall be cable assemblies consisting of flexible, twisted pair stranded wire with eight-position plugs at each end. Cable shall be label-verified. Cable jacket shall be factory marked at regular intervals indicating verifying organization and performance level. Patch cords shall be wired straight through; pin numbers shall be identical at each end and shall be paired to match T568B patch panel jack wiring per EIA ANSI/TIA/EIA-568-A. Patch cords shall be keyed or unkeyed as as indicated by Government. Patch cords shall be factory assembled.

2.2.4.4 Terminal Blocks

Terminal blocks shall be wall mounted wire termination units consisting of insulation displacement connectors mounted in plastic blocks, frames or housings. Blocks shall be type 110 which meet the requirements of EIA ANSI/TIA/EIA-568-A for category 5. Blocks shall be mounted on standoffs and shall include cable management hardware. Insulation displacement connectors shall terminate 22 or 24 gauge solid copper wire as a minimum, and shall be connected in pairs so that horizontal cable and connected jumper wires are on separate connected terminals.

2.3 SHIELDED TWISTED PAIR CABLE SYSTEM (Data)

2.3.1 Backbone Cable

Backbone cable shall meet the requirements of IBM GA27-3773-0 for 150 ohm Shielded Twisted Pair Cable and shall meet or exceed IBM performance requirements for Type 1A cable. Cable shall be label-verified. Cable jacket shall be factory marked at regular intervals indicating verifying organization and performance level. Cable shall be rated CMP per NFPA 70.

2.3.2 Horizontal Cable

Horizontal cable shall meet the requirements of IBM GA27-3773-0 for 150 ohm Shielded Twisted Pair Cable and shall meet or exceed IBM performance requirements for Type 1A cable. Cable shall be label-verified. Cable jacket shall be factory marked at regular intervals indicating verifying organization and performance level. Cable shall be rated CMP per NFPA 70.

2.3.3 Connecting Hardware

2.3.3.1 Connectors

Connectors for shielded twisted pair cable shall meet the requirements of EIA ANSI/TIA/EIA-568-A for media interface connectors and IBM GA27-3773-0 for Type 1A data connectors. Connectors shall be of hermaphroditic design and shall be utilized for outlets and patch panel terminations. Outlet faceplates shall be provided and shall be impact resistant plastic, color as selected by Architect, single gang. Mounting plates shall be provided for systems furniture and shall match the systems furniture in color.

2.3.3.2 Patch Panels

Patch panels shall be wall mounted panels with openings for shielded twisted pair connectors. Panels shall be metallic and shall ground the outer shield of the cable. Patch panels shall provide strain relief for cables. Panels shall be labeled with alphanumeric x-y coordinates and be provided with labeling space.

2.3.3.3 Patch Cords

Patch cords shall be cable assemblies consisting of flexible shielded twisted pair cable with shielded twisted pair type connectors at each end. Cable shall meet the requirements of IBM GA27-3773-0 for 150 ohm Shielded Twisted Pair Cable and shall meet or exceed performance requirements for Type 6A patch panel data cable. Connectors shall meet or exceed the requirements of EIA ANSI/TIA/EIA-568-A for media interface connectors. Patch cords shall be factory assembled.

2.4 COAXIAL CABLE SYSTEM

2.4.1 Riser and Backbone Cable

Riser and backbone cable shall meet the requirements of EIA ANSI/TIA/EIA-568-A 10BASE5 for coaxial cable. The coax cable shall have a nominal impedance of 75 ohms, rated RG 59/U with a PVC Type IIA non-contaminating jacket. Cable shall be suitable for direct burial. Cable shall meet military specification MIL-C-17D. Cable shall be label-verified. Cable jacket shall be factory marked at regular intervals indicating verifying organization and performance level. Cable shall be rated CMR per NFPA 70. Cable shall have band markings every 8 feetfor transceiver tap placement.

2.4.2 Horizontal Distribution Cable

Horizontal distribution cable shall meet the requirements of EIA ANSI/TIA/EIA-568-A10BASE2 for coaxial cable. The coax cable shall have a nominal impedance of 75 ohms, rated RG 59/U with a PVC Type IIA non-contaminating jacket. Cable shall meet military specification MIL-C-17D. Cable shall be label-verified. Cable jacket shall be factory marked at regular intervals indicating verifying organization and performance level. Cable shall be rated CMG per NFPA 70.

2.4.3 Connecting Hardware

2.4.3.1 Connectors

Connectors shall meet the requirements of EIA ANSI/TIA/EIA-568-A 10BASE5 or 10BASE2 for coaxial cable connectors, as required for the service.

Connectors for riser/backbone cable shall be an "F" Series RF terminator. Connectors for station cable shall be "F" Series RF terminator. Station cable faceplates shall be provided and shall be impact resistant plastic, , color as specified by architect,,single gang, with double-sided female "F" Series adapter. Mounting plates shall be provided for system furniture and shall match the furniture system in color.

2.4.3.2 Patch Panels

Patch panels shall be wall mounted panels. Connectors shall be double-sided "F" Series. Connector mounting surface shall ground the connector shields. Connectors shall meet the requirements of EIA ANSI/TIA/EIA-568-A 10BASE2 for coaxial cable connectors. Panels shall be labeled with alphanumeric x-y coordinates and be provided with labeling space.

2.5 Not Used

2.6 Base Unit Cabinets

2.6.1 Not Used

2.6.2 Not Used

2.6.3 Not Used

2.6.4 Not Used

2.6.5 Wall Mounted Cabinets

Wall mounted Base Unit Cabinets shall conform to UL 50 and have boxes constructed of zinc-coated sheet steel with dimensions not less than shown on drawings. Trim shall be fitted with hinged door and flush catch. Doors shall provide maximum openings to the box interiors. Fiber obtic termination cabinets shall utilize 6-pack termination panels. Number of 6-pack terminaltion panels shall be as indicated on the drawings. Boxes shall be provided with 3/4 inch plywood backboard painted white or a light color. A duplex AC outlet shall be installed within the cabinet.

2.7 EQUIPMENT MOUNTING BACKBOARD

Plywood backboards shall be provided, 3/4 inch sized as required, painted with white or light colored paint.

2.8 TELECOMMUNICATIONS OUTLET BOXES

Electrical boxes for telecommunication outlets shall be 4-11/16 inch square by 2-1/8 inches deep with minimum 3/8 inch deep single or two gang plaster ring as shown. Provide a minimum 1 inch conduit.

PART 3 EXECUTION

3.1 INSTALLATION

System components and appurtenances shall be installed in accordance with NFPA 70, manufacturer's instructions and as shown. Necessary interconnections, services, and adjustments required for a complete and operable signal distribution system shall be provided. Components shall be labeled in accordance with EIA ANSI/TIA/EIA-606. Penetrations in

fire-rated construction shall be firestopped in accordance with Section 07840 FIRESTOPPING. Conduits, outlets and raceways shall be installed in accordance with Section 16415 ELECTRICAL WORK, INTERIOR. Wiring shall be installed in accordance with EIA ANSI/TIA/EIA-568-A and as specified in Section 16415 ELECTRICAL WORK, INTERIOR. Wiring, and terminal blocks and outlets shall be marked in accordance with EIA ANSI/TIA/EIA-606. Cables shall not be installed in the same cable tray, utility pole compartment, or floor trench compartment with ac power cables. Cables not installed in conduit or wireways shall be properly secured and neat in appearance and, if installed in plenums or other spaces used for environmental air, shall comply with NFPA 70 requirements for this type of installation.

3.1.1 Horizontal Distribution Cable

The rated cable pulling tension shall not be exceeded. Cable shall not be stressed such that twisting, stretching or kinking occurs. Cable shall not be spliced. Fiber optic cables shall be installed either in conduit or through type cable trays to prevent microbending losses. Copper cable not in a wireway shall be suspended a minimum of 8 inches above ceilings by cable supports no greater than 60 inches apart. Cable shall not be run through structural members or in contact with pipes, ducts, or other potentially damaging items. Placement of cable parallel to power conductors shall be avoided, if possible; a minimum separation of 12 inches shall be maintained when such placement cannot be avoided. Cables shall be terminated; no cable shall contain unterminated elements. Minimum bending radius shall not be exceeded during installation or once installed. Cable ties shall not be excessively tightened such that the transmission characteristics of the cable are altered. In raised floor areas, cable shall be installed after the flooring system has been installed. Cable 6 feet long shall be neatly coiled not less than 12 inches in diameter below each feed point in raised floor areas.

3.1.2 Riser and Backbone Cable

Vertical cable support intervals shall be in accordance with manufacturer's recommendations. Cable bend radius shall not be less than ten times the outside diameter of the cable during installation and once installed. Maximum tensile strength rating of the cable shall not be exceeded. Cable shall not be spliced.

3.1.3 Telecommunications Outlets

3.1.3.1 Faceplates

As a minimum each jack shall be labeled as to its function and a unique number to identify cable link.

3.1.3.2 Cables

Unshielded twisted pair and fiber optic cables shall have a minimum of 6 inches of slack cable loosely coiled into the telecommunications outlet boxes. Minimum manufacturers bend radius for each type of cable shall not be exceeded.

3.1.3.3 Pull Cords

Pull cords shall be installed in all conduit serving telecommunications outlets which do not initially have fiber optic cable installed.

3.1.4 Terminal Blocks

Terminal blocks shall be mounted in orderly rows and columns. Adequate vertical and horizontal wire routing areas shall be provided between groups of blocks. Industry standard wire routing guides shall be utilized.

3.1.5 Unshielded Twisted Pair Patch Panels

Patch panels shall be mounted in equipment racks with sufficient modular jacks to accommodate the installed cable plant plus 10 percent spares. Cable guides shall be provided above, below and between each panel.

3.2 TERMINATION

Cables and conductors shall sweep into termination areas; cables and conductors shall not bend at right angles. Manufacturer's minimum bending radius shall not be exceeded. When there are multiple system type drops to individual workstations, relative position for each system shall be maintained on each system termination block or patch panel.

3.2.1 Unshielded Twisted Pair Cable

Each pair shall be terminated on appropriate outlets, terminal blocks or patch panels. No cable shall be unterminated or contain unterminated elements. Pairs shall remain twisted together to within the proper distance from the termination as specified in EIA ANSI/TIA/EIA-568-A. Conductors shall not be damaged when removing insulation. Wire insulation shall not be damaged when removing outer jacket.

3.2.2 Shielded Twisted Pair Cable

Each cable shall be terminated on panel-mounted connectors. Cables shall be grounded at patch panels using manufacturer's recommended methods. Shield braid shall be continuous to connector braid terminator. Wire insulation shall not be damaged when removing shield.

3.2.3 Coaxial Cable

Home run type station cables shall be terminated at each end. Backbone cables shall be terminated with appropriate connectors or end-of-line terminators as required. Loop-type cable systems shall be terminated with appropriate drop connectors and terminators as required. Backbone cable shield conductor shall be grounded to communications ground at only one point and shall not make electrical contact with ground anywhere else.

3.3 GROUNDING

Signal distribution system ground shall be installed in the telecommunications entrance facility and in each telecommunications closet in accordance with EIA ANSI/TIA/EIA-607 and Section 16415 ELECTRICAL WORK, INTERIOR. Equipment racks shall be connected to the electrical safety ground.

3.4 ADDITIONAL MATERIALS

The Contractor shall provide the following additional materials required for facility startup.

a. 10 of each type outlet.

b. 10 of each type cover plate.

c. 1 of each type terminal block for each telecommunications closet.

d. 4 Patch cords of 10 feet for each telecommunications closet.

e. 1 Set of any and all special tools required to establish a cross connect and to change and/or maintain a terminal block.

3.5 ADMINISTRATION AND LABELING

3.5.1 Labeling

3.5.1.1 Labels

All labels shall be in accordance with EIA ANSI/TIA/EIA-606.

3.5.1.2 Cable

All cables will be labeled using color labels on both ends with encoded identifiers per EIA ANSI/TIA/EIA-606.

3.5.1.3 Termination Hardware

All workstation outlets and patch panel connections will be labeled using color coded labels with encoded identifiers per EIA ANSI/TIA/EIA-606.

3.6 TESTING

Materials and documentation to be furnished under this specification are subject to inspections and tests. All components shall be terminated prior to testing. Equipment and systems will not be accepted until the required inspections and tests have been made, demonstrating that the signal distribution system conforms to the specified requirements, and that the required equipment, systems, and documentation have been provided.

3.6.1 Unshielded Twisted Pair Tests

All metallic cable pairs shall be tested for proper identification and continuity. All opens, shorts, crosses, grounds, and reversals shall be corrected. Correct color coding and termination of each pair shall be verified in the communications closet and at the outlet. Horizontal wiring shall be tested from and including the termination device in the communications closet to and including the modular jack in each room. Backbone wiring shall be tested end-to-end, including termination devices, from terminal block to terminal block, in the respective communications closets. These test shall be completed and all errors corrected before any other tests are started.

3.6.2 Category 5 Circuits

All category 5 circuits shall be tested using a test set that meets the Class II accuracy requirements of EIA TSB 67 standard. Testing shall use the Basic Link Test procedure of EIA TSB 67. If more than 5 percent of the category 3 circuits tested fail, then all category 3 circuits shall be tested. Cables which contain failed circuits shall be replaced and retested to verify the standard is met.

3.6.3 Shielded Twisted Pair

Wiring configuration shall be tested for continuity, opens, shorts, swaps and correct pin configuration; dc resistance both pair-to-pair and wire-to-shield shall be verified. Cable lengths shall be verified. Near end crosstalk shall be tested from 772 kHz to 300 MHz. Ground potential difference between wiring closets, ground potential difference between patch panel and wall outlet, and ground path resistance shall be tested per IBM GA27-3361-07.

3.6.4 Coaxial Cable

Cable shall be tested for continuity, shorts and opens. Characteristic impedance shall be verified over the range of intended operation. Cable length shall be verified. Cable shall be sweep tested for attenuation over the range of intended operation.

-- End of Section --