SPECIFICATIONS
(FOR CONSTRUCTION CONTRACT)

Solicitation No. DACW45-02-B-0017

Perry Creek Flood Protection Phase 4

Sioux City, IA

May 2002

US Army Corps of Engineers
Omaha District

PERRY CREEK FLOOD PROTECTION
PHASE 4
SIOUX CITY, IA

PROJECT TABLE OF CONTENTS

CONTRACT REQUIREMENTS

00010 Solicitation, Offer and Award (SF-1442)
00100 Instructions, Conditions & Notices to Bidders
00600 Representations, Certifications & Other Statements of Bidders
00700 Contract Clauses
00800 Special Contract Requirements

DIVISION 01 - GENERAL REQUIREMENTS

01040 AS-BUILT DRAWINGS
01200 CONSTRUCTION GENERAL
01330 SUBMITTAL PROCEDURES
01351 SAFETY, HEALTH, AND EMERGENCY RESPONSE (HTRW/UST)
01355 ENVIRONMENTAL PROTECTION
01356 STORM WATER POLLUTION PREVENTION MEASURES
01400 SPECIAL SAFETY REQUIREMENTS FOR DEMOLITION AND RENOVATION
01450 CHEMICAL DATA QUALITY CONTROL
01451 CONTRACTOR QUALITY CONTROL
01550 MEASUREMENT AND PAYMENT

DIVISION 02 - SITE WORK

02011 DEFORMATION SURVEYS/MONITORING
02115A UNDERGROUND STORAGE TANK REMOVAL
02210 GRADING
02212 COMPACTED EMBANKMENT
02215 TOPSOIL
02220 DEMOLITION
02230 CLEARING AND GRUBBING
02245 STONE (RIPRAP) PROTECTION
02310 DRAINAGE STRUCTURES IN CHANNEL
02315 EXCAVATION, FILLING AND BACKFILLING FOR STRUCTURES
02316a EXCAVATION, TRENCHING, AND BACKFILLING FOR UTILITIES SYSTEMS
02370 TURF REINFORCEMENT MAT
02430 RETAINING WALL TIE BACKS
02440 TRAFFIC SIGNS
02464a METAL SHEET PILING
02466 DRILLED FOUNDATION CAISSONS (PIERS)
02510a WATER DISTRIBUTION SYSTEM
02530N SANITARY SEWERAGE
02532a FORCE MAINS AND INVERTED SIPHONS; SEWER
02563 (IOWA) PAVEMENTS FOR SMALL PROJECTS
02630 STORM-DRAINAGE SYSTEM
02710 BOX CULVERT WALL DRAINAGE SYSTEM
02763a PAVEMENT MARKINGS
02821 FENCING
02832 SEGMENTAL CONCRETE BLOCK GRAVITY RETAINING WALL
02921 SEEDING
02930a EXTERIOR PLANTING

DIVISION 03 - CONCRETE

03101 FORMWORK FOR CONCRETE
03150 EXPANSION JOINTS, CONTRACTION JOINTS, AND WATERSTOPS
03201 STEEL BARS FOR CONCRETE REINFORCEMENT
03301 CAST-IN-PLACE STRUCTURAL CONCRETE

DIVISION 13 - SPECIAL CONSTRUCTION

13280 ASBESTOS ABATEMENT

SOLICITATION, OFFER, AND AWARD (Construction, Alteration, or Repair)	1. SOLICITATION NO.	2. TYPE OF SOLICITATION	3. DATE ISSUED	PAGE OF PAGES
	DACW45-02-B-0017	☒ SEALED BID (IFB) ☐ NEGOTIATED (RFP)	14 May 2002	1 OF 6

IMPORTANT - The "offer" section on the reverse must be fully completed by offeror.

4. CONTRACT NO.	5. REQUISITION/PURCHASE REQUEST NO.	6. PROJECT NO.

7. ISSUED BY CODE CT

U S ARMY ENGINEER DISTRICT, OMAHA
106 South 15th Street
Omaha, Nebraska 68102-1618

8. ADDRESS OFFER TO

U.S.ARMY CORPS OF ENGINEERS, OMAHA
Attn: CONTRACTING DIVISION (CENWO-CT)
106 South 15th Street
Omaha, Nebraska 68102-1618

9. FOR INFORMATION CALL: ▶	A. NAME	B. TELEPHONE NO. (Include area code) (NO COLLECT CALLS)
	See SECTION 00100, Para. 25	See SECTION 00100, Para. 25

SOLICITATION

NOTE: In sealed bid solicitations "offer" and "offeror" mean "bid" and "bidder".

10. THE GOVERNMENT REQUIRES PERFORMANCE OF THE WORK DESCRIBED IN THESE DOCUMENTS (Title, identifying no., date):

The Offeror hereby agrees to do all the work described in these documents entitled:

Perry Creek Flood Protection, Phase 4, Sioux City, IA.

RETURN WITH BIDS: SECTION 00010 (SF1442), SECTION 00600 REPRESENTATIONS, CERTIFICATIONS & OTHER STATEMENTS OF BIDDERS, and all Bonding Requirements, See SECTION 00700 CONTRACT CLAUSES and SECTION 00100 for Performance and Payment Bonds.

11. The Contractor shall begin performance within 10 calendar days and complete it within 730 calendar days after receiving

☐ award, ☒ notice to proceed. This performance period is ☒ mandatory, ☐ negotiable. (See _____ .)

12A. THE CONTRACTOR MUST FURNISH ANY REQUIRED PERFORMANCE AND PAYMENT BONDS? (If "YES," indicate within how many calendar days after award in Item 12B.)	12B. CALENDAR DAYS
☒ YES ☐ NO	10

13. ADDITIONAL SOLICITATION REQUIREMENTS:

A. Sealed offers in original and 0 copies to perform the work required are due at the place specified in Item 8 by 2:00 pm (hour) local time 17 Jun 2002 (date). If this is a sealed bid solicitation, offers must be publicly opened at that time. Sealed envelopes containing offers shall be marked to show the offeror's name and address, the solicitation number, and the date and time offers are due.

B. An offer guarantee ☒ is, ☐ is not required.

C. All offers are subject to the (1) work requirements, and (2) other provisions and clauses incorporated in the solicitation in full text or by reference.

D. Offers providing less than 60 calendar days for Government acceptance after the date offers are due will not be considered and will be rejected.

14. NAME AND ADDRESS OF OFFEROR (Include ZIP Code)	15. TELEPHONE NO. (Include area code)
DUNS Number:	16. REMITTANCE ADDRESS (Include only if different than Item 14)
CODE FACILITY CODE	

17. The offeror agrees to perform the work required at the prices specified below in strict accordance with the terms of this solicitation, if this offer is accepted by the Government in writing within 60 calendar days after the date offers are due. (Insert any number equal to or greater than the minimum requirement stated in Item 13D. Failure to insert any number means the offeror accepts the minimum in Item 13D.)

AMOUNTS ▶ See Attached Bidding Schedule

Contractor's Fax No._____ CAGE CODE _____

Contractor's E-Mail address_____

18. The offeror agrees to furnish any required performance and payment bonds.

19. ACKNOWLEDGMENT OF AMENDMENTS

(The offeror acknowledges receipt of amendments to the solicitation - give number and date of each)

AMENDMENT NO.										
DATE										

20A. NAME AND TITLE OF PERSON AUTHORIZED TO SIGN OFFER (Type or print)	20B. SIGNATURE	20C. OFFER DATE

AWARD (To be completed by Government)

21. ITEMS ACCEPTED:

22. AMOUNT	23. ACCOUNTING AND APPROPRIATION DATA

24. SUBMIT INVOICES TO ADDRESS SHOWN IN (4 copies unless otherwise specified) ▶	ITEM 26	25. OTHER THAN FULL AND OPEN COMPETITION PURSUANT TO ☐ 10 U.S.C. 2304(c) ( ) ☐ 41 U.S.C. 253(c) ( )

26. ADMINISTERED BY CODE	27. PAYMENT WILL BE MADE BY
U.S. Army Engineer District, Omaha 106 South 15th Street Omaha, Nebraska 68102-1618	USAED Omaha c/o USACE Finance Center 5722 Integrity Drive Millington, TN 38054-5005

CONTRACTING OFFICER WILL COMPLETE ITEM 28 OR 29 AS APPLICABLE

☐ 28. NEGOTIATED AGREEMENT (contractor is required to sign this document and return_____ copies to issuing office.) Contractor agrees to furnish and deliver all items or perform all work, requisitions identified on this form and any continuation sheets for the consideration stated in this contract. The rights and obligations of the parties to this contract shall be governed by (a) this contract award, (b) the solicitation, and (c) the clauses, representations, certifications, and specifications incorporated by reference in or attached to this contract.

☐ 29. AWARD (Contractor is not required to sign this document.) Your offer on this solicitation, is hereby accepted as to the items listed. This award consummates the contract, which consists of (a) the Government solicitation and your offer, and (b) this contract award. No further contractual document is necessary.

30A. NAME AND TITLE OF CONTRACTOR OR PERSON AUTHORIZED TO SIGN (Type or print)		31A. NAME OF CONTRACTING OFFICER (Type or print)	
30B. SIGNATURE	30C. DATE	31B. UNITED STATES OF AMERICA BY	31C. AWARD DATE

BIDDING SCHEDULE (With Option)

Basic

Item No.	Description	Quantity	Unit	Unit Price	Amount
1.	Stone for Riprap (Riprap Type A)	35,920	Tons	$_____	$_____
2.	Stone for Riprap (Riprap Type B)	13,370	Tons	$_____	$_____
3.	Stone for Riprap (Riprap Type C)	5,960	Tons	$_____	$_____
4.	Stone for Riprap (Riprap Type D)	1,420	Tons	$_____	$_____
5.	Spalls	8,150	Tons	$_____	$_____
6.	Bedding for Riprap Type A	24,450	Tons	$_____	$_____
7.	Bedding for Riprap Type B, C & D	8,670	Tons	$_____	$_____
8.	6” Granular Surfacing	360	Tons	$_____	$_____
9.	Excavation	563,100	C.Y.	$_____	$_____
10.	Compacted Random Backfill	205,400	C.Y.	$_____	$_____
11.	Entire Work Complete, for Deformation Surveys/ Monitoring (Specification Section 02011)	Job	L.S.	XXXXXXX	$_____
12.	Entire Work Complete, for Gatewell & Stilling Basin	Job	L.S.	XXXXXXX	$_____
13.	Entire Work Complete, for Hamilton Blvd. Left Bank Retaining Wall	Job	L.S.	XXXXXXX	$_____
14.	Entire Work Complete, for Hamilton Blvd. Right Bank Retaining Wall	Job	L.S.	XXXXXXX	$_____
15.	Entire Work Complete, for Retaining Wall at Market Place Mall	Job	L.S.	XXXXXXX	$_____
16.	Entire Work Complete, for Clifton Ave. Box Culvert	Job	L.S.	XXXXXXX	$_____
17.	Entire Work Complete, for Storm Drains (Shts. C7.01 - C7.08 Profile Lines 1-49 & Shts. C7.09 - C7.11 Profiles P-001 thru P-006, P-011, P-012, & P-027 thru P-029)	Job	L.S.	XXXXXXX	$_____

BIDDING SCHEDULE (With Option) -Cont'd

Basic (Cont'd)

Item No.	Description	Quantity	Unit	Amount
18.	Entire Work Complete, for Water Mains & Sanitary Sewers	Job	L.S.	$_____
19.	Entire Work Complete, for Storm Sewers (Shts. C7.09 - C7.11 Profiles P-007 thru P-010, P-013, P-016 thru P-020, P-16A, P-17A, P-022, & P-024 thru P-026)	Job	L.S.	$_____
20.	Entire Work Complete, for Portland Cement Concrete Pavement	Job	L.S.	$_____
21.	Entire Work Complete, for Traffic Signs and Pavement Markings	Job	L.S.	$_____
22.	Entire Work Complete, for Sidewalks and Aprons	Job	L.S.	$_____
23.	All Remaining Work, excluding Option Bid Items listed below	Job	L.S.	$_____

BASIC TOTAL AMOUNT (Items 1 thru 23) **$**_____
(in figures)

Option

OPTION 1 – Construction of the channel from the limits shown on Drawings Sheets G-15 and GP-3

Item No.	Description	Quantity	Unit	Unit Price	Amount
1a.	Stone for Riprap (Riprap Type A)	1,300	Tons	$_____	$_____
1b.	Stone for Riprap (Riprap Type C)	2,680	Tons	$_____	$_____
1c.	Stone for Riprap (Riprap Type D)	1,870	Tons	$_____	$_____
1d.	Spalls	2,110	Tons	$_____	$_____
1e.	Bedding for Riprap Type A	890	Tons	$_____	$_____
1f	Bedding for Riprap Type C & D	2,280	Tons	$_____	$_____
1g.	Excavation	41,700	C.Y.	$_____	$_____

BIDDING SCHEDULE (With Option) –Cont'd

Option (Cont'd)

Item No.	Description	Quantity	Unit	Unit Price	Amount
1h.	Compacted Random Backfill	4,600	C.Y.	$_____	$_____
1i	Entire Work Complete, for Retaining Wall at Bowling Alley	Job	L.S.	XXXXXXX	$_____
1j.	All Remaining Work, for Contract Option construction based on limits indicated	Job	L.S.	XXXXXXX	$_____

Option 1 Total (Items 1a thru 1j) $_____

TOTAL (BASIC + OPTION 1) $_____
(in figures)

Notes for Bidding Schedule:

1. See SECTION 00100, INSTRUCTIONS, CONDITIONS, & NOTICES TO OFFERORS) for evaluation of options. The Government reserves the right to exercise the option within 6 months after issuance of Notice to Proceed. *Note: Work described in the Option Bidding Items involves constructing the New Perry Creek channel from the limits shown on Sheets G-15 and GP-3. This includes construction of the Bowling Alley Retaining Wall in the option. Option 1 consists of items 1a through 1j, if the option is awarded it will be awarded as a whole, consisting of items 1a through 1j.*

2. Bid prices must be entered for all items of the schedule. Total amount offers submitted without prices being entered on individual items will be rejected. In case of variation between the lump-sum prices and the total amount, the lump-sum prices will be considered the bid. In case of variation between the unit prices and the extensions, the unit prices will be considered the bid. Additions will be subject to verification by the Government.

3. Quantities for unit priced items are estimated only and the respective unit price will prevail in the event of an overrun or underrun subject to Contract Requirements Clause "Variation in Estimated Quantities."

4. A modification to a bid that provides for a single adjustment to the total amount bid should state the application of the adjustment to each respective price affected. If the modification is not so apportioned, the single adjustment will be applied to Basic Bid Item No. 23.

5. The category "All Remaining Work" shall include any activities not listed as pay items, such as Contractor staging, site preparation, concrete form work, etc.

6. See Section 01550 Measurement and Payment for additional information on the bid items.

SECTION 00100

INSTRUCTIONS, CONDITIONS & NOTICES TO BIDDERS
(July 2000, Revised April 2002)

INDEX

Attachments: Required Central Contractor Registration

1 GENERAL BIDDING INFORMATION
2 (FAR 52.214-6) EXPLANATION TO PROSPECTIVE BIDDERS (APRIL 1984).
3 RESERVED
4 (FAR 52.214-5) SUBMISSION OF BIDS (MAR 1997).
5 (FAR 52.214-18) PREPARATION OF BIDS - CONSTRUCTION (APRIL 1984).
6 (FAR 52.214-4) FALSE STATEMENTS IN BIDS (APRIL 1984).
7 (FAR 52.214-7) LATE SUBMISSIONS, MODIFICATIONS, AND WITHDRAWALS OF BIDS (NOV 1999).
8 INFORMATION FOR MODIFYING BIDS.
9 BID GUARANTEE.
10 PERFORMANCE AND PAYMENT BONDS.
11 (FAR 52.214-19) CONTRACT AWARD - SEALED BIDDING - CONSTRUCTION (AUG 1996).
12 NORTH AMERICAN CLASSIFICATION SYSTEM (NAICS).
13 SMALL BUSINESS SIZE STANDARD.
14 (FAR 52.214-3) AMENDMENTS TO INVITATIONS FOR BIDS (DECEMBER 1989).
15 CHANGES PRIOR TO OPENING BIDS.
16 (FAR 52.214-34) SUBMISSION OF OFFERS IN THE ENGLISH LANGUAGE (APR 1991)
17 (FAR 52.214-35) SUBMISSION OF OFFERS IN U.S. CURRENCY (APR 1991)
18 (EFARS 52.214-5000) ARITHMETIC DISCREPANCIES.
19 (FAR 52.217-5) EVALUATION OF OPTIONS (JUL 1990).
20 OPTIONS.
21 AVAILABILITY OF SPECIFICATIONS, STANDARDS, AND DESCRIPTIONS.
22 AVAILABLE PLANT.
23 EQUIPMENT OWNERSHIP AND OPERATING EXPENSE SCHEDULE.
24 NOTICE REGARDING BUY AMERICAN ACT.
25 IOWA SALES AND USE TAX.
26 (FAR 52.236-27) SITE VISIT (CONSTRUCTION) (FEB 1995).
27 BIDDER'S QUESTIONS AND COMMENTS.
28 (FAR 52.233-2) SERVICE OF PROTEST (AUG 1996).
29 PRE-AWARD SURVEY INFORMATION (Local Provision) (Sep 93)
30 (FAR 52.204-6) DATA UNIVERSAL NUMBERING SYSTEM (DUNS) NUMBER (JUNE 1999)
31 (FAR 52.216-1) TYPE OF CONTRACT (APR 1984).
32 SUBCONTRACTING PLAN/SUBCONTRACTING GOALS REGARDING THE UTILIZATION OF
32 SMALL BUSINESS CONCERNS.
33 (DFARS 252.204-7004) REQUIRED CENTRAL CONTRACTOR REGISTRATION (NOV 2001)

SECTION 00100

INSTRUCTIONS, CONDITIONS & NOTICES TO BIDDERS

1 GENERAL BIDDING INFORMATION

Bids shall be either mailed or hand-carried as indicated below. Bid will be PUBLICLY opened at the bid time indicated on Standard Form SF 1442 (Page 00010-1).

1.1 MAILED BIDS AND HAND-CARRIED BIDS

Mailed bids shall be addressed to the location as indicated on Standard Form SF 1442 (Page 00010-1), Item No. 8.

Due to heightened security at Government installations, those bidders who have their bids hand-carried* shall contact Sharon Coy, Contract Specialist at (402) 221-4333 or (402) 221-4100 prior to delivering to the U. S. Army Corps of Engineer District, Omaha, 106 South 15th Street, Omaha, NE.

On the date specified and for thirty (30) minutes prior to time specified on Standard Form SF 1442, Page 00010-1, item 13.A, a Contracting representative will be in the lobby to receive bids. At the time specified on Standard SF 1442 Page 00010-1, item 13.A, the designated bid opening official will announce that receipt of bids is closed. Official time will be established by time/stamp clock located in the area where bids are received.

Anyone wishing to attend this public opening will be required to present photo identification to sign in and then will be escorted to the facility where bids will be opened. Once bids have been opened, read and recorded, attendees will then be escorted to exit the building.

*This instruction shall also apply to those bids delivered through a delivery or parcel service.

1.2 SOLICITATION RESTRICTIONS

This solicitation is unrestricted and open to both large and small business participation.

1.3 BASIS FOR AWARD.

IT IS INTENDED THAT AWARD WILL BE MADE TO ONE BIDDER FOR THE ENTIRE WORK.

1.4 APPROPRIATION AND AUTHORITY

APPROPRIATION: 96 X 3122 Construction General

AUTHORITY: The work provided for herein is authorized: Section 404(a) of the Water Resources Development Act of 1986 (Public law 99-662).

1.5 DESCRIPTION OF WORK

The scope of this project is to furnish all plant, labor, materials, and equipment and performing all work for grass and rock lined channel improvement work in and along Perry Creek from the Bluff St. bridge to Stone Park Blvd. Construction of the open channel will require excavation and backfilling of soils, placement of riprap slope protection, and construction of flood walls, retaining walls, and 10' wide low levees. Other work items include removing existing buildings and bridges within the project right-of-way, construction of approximately 50 storm drain outlets, relocation of storm sewers, sanitary sewers, water and gas utilities, pavement removal and replacement, installation of traffic signals, and other miscellaneous site work.

Work shall be in accordance with plans and specifications issued with this solicitation.

1.6 ESTIMATED CONSTRUCTION COST

The estimated construction cost of this project is between $10,000,000 and $15,000,000.

2 (FAR 52.214-6) EXPLANATION TO PROSPECTIVE BIDDERS (APRIL 1984).

Any prospective bidder desiring an explanation or interpretation of the solicitation, drawings, specifications, etc., must request it in writing soon enough to allow a reply to reach all prospective bidders before the submission of their bids. Oral explanations or instructions given before the award of a contract will not be binding. Any information given a prospective bidder concerning a solicitation will be furnished promptly to all other prospective bidders as an amendment to the solicitation, if that information is necessary in submitting bids or if the lack of it would be prejudicial to other prospective bidders.

3 RESERVED

(NOTE: FACSIMILE, ELECTRONIC COMMERCE OR TELEGRAPHIC BIDS ARE NOT AUTHORIZED AND WILL NOT BE ACCEPTED. TELEGRAPHIC MODIFICATIONS OR WITHDRAWAL OF BIDS ARE AUTHORIZED. FACSIMILE MODIFICATIONS OR WITHDRAWAL ARE NOT AUTHORIZED.)

4 (FAR 52.214-5) SUBMISSION OF BIDS (MAR 1997).

(a) Bids and bid modifications shall be submitted in sealed envelopes or packages (unless submitted by electronic means) (1) addressed to the office specified in the solicitation and (2) showing the time and date specified for receipt, the solicitation number, and the name and address of the bidder.

(b) Bidders using commercial carrier services shall ensure that the bid is addressed and marked on the outermost envelope or wrapper as prescribed in subparagraphs (a) (1) and (2) of this provision when delivered

to the office specified in the solicitation.

(c) Telegraphic bids will not be considered unless authorized by the solicitation; however, bids may be modified or withdrawn by written or telegraphic notice.

(d) Facsimile bids, modifications, or withdrawals, will not be considered unless authorized by the solicitation

(e) Bids submitted by electronic commerce shall be considered only if the electronic commerce method was specifically stipulated or permitted by the solicitation.

5 (FAR 52.214-18) PREPARATION OF BIDS - CONSTRUCTION (APRIL 1984).

(a) Bids must be--

(1) Submitted on the forms furnished by the Government or on copies of those forms, and
(2) **Manually signed.** The person signing a bid must initial each erasure or change appearing on any bid form.

(b) The bid form may require bidders to submit bid prices for one or more items on various bases, including--

(1) Lump sum bidding;

(2) Alternate prices;

(3) Units of construction; or

(4) Any combination of subparagraphs (1) through (3) above.

(c) If the solicitation requires bidding on all items, failure to do so will disqualify the bid. If bidding on all items is not required, bidders should insert the words "no bid" in the space provided for any item on which no price is submitted.

(d) Alternate bids will not be considered unless this solicitation authorizes their submission.

6 (FAR 52.214-4) FALSE STATEMENTS IN BIDS (APRIL 1984).

Bidders must provide full, accurate, and complete information as required by this solicitation and its attachments. The penalty for making false statements in bids is prescribed in 18 U.S.C. 1001.

(NOTE: FACSIMILE, ELECTRONIC COMMERCE OR TELEGRAPHIC BIDS ARE NOT AUTHORIZED AND WILL NOT BE ACCEPTED. TELEGRAPHIC MODIFICATIONS OR WITHDRAWAL OF BIDS ARE AUTHORIZED. FACSIMILE MODIFICATIONS OR WITHDRAWAL ARE NOT AUTHORIZED.)

7 (FAR 52.214-7) LATE SUBMISSIONS, MODIFICATIONS, AND WITHDRAWALS OF BIDS (NOV 1999).

(a) Bidders are responsible for submitting bids, and any modifications or withdrawals, so as to reach the Government office designated in the invitation for bids (IFB) by the time specified in the IFB. If no time is specified in the IFB, the time for receipt is 4:30 p.m., local time, for the designated Government office on the date that bids are due.

(b)(1) Any bid, modification, or withdrawal received at the Government office designated in the IFB after the exact time specified for receipt of bids is "late" and will not be considered unless it is received before award is made, the Contracting Officer determines that accepting the late bid would not unduly delay the acquisition; and—

(i) If it was transmitted through an electronic commerce method authorized by the IFB, it was received at the initial point of entry to the Government infrastructure not later than 5:00 p.m. one working day prior to the date specified for receipt of bids; or

(ii) There is acceptable evidence to establish that it was received at the Government installation designated for receipt of bids and was under the Government's control prior to the time set for receipt of bids.

(2) However, a late modification of an otherwise successful bid that makes its terms more favorable to the Government, will be considered at any time it is received and may be accepted.

(c) Acceptable evidence to establish the time of receipt at the Government installation includes the time/date stamp of that installation on the bid wrapper, other documentary evidence of receipt maintained by the installation, or oral testimony or statements of Government personnel.

(d) If an emergency or unanticipated event interrupts normal Government processes so that bids cannot be received at the Government office designated for receipt of bids by the exact time specified in the IFB and urgent Government requirements preclude amendment of the IFB, the time specified for receipt of bids will be deemed to be extended to the same time of day specified in the solicitation on the first work day on which normal Government processes resume.

(e) Bids may be withdrawn by written notice received at any time before the exact time set for receipt of bids. If the IFB authorizes facsimile bids, bids may be withdrawn via facsimile received at any time before the exact time set for receipt of bids, subject to the conditions specified in the provision at 52.214-31, Facsimile Bids. A bid may be withdrawn in person by a bidder or its authorized representative if, before the exact time set for receipt of bids, the identity of the person requesting withdrawal is established and the person signs a receipt for the bid.

(End of provision)

8 INFORMATION FOR MODIFYING BIDS.

Bids which have been delivered to the designated bid receiving office may be modified or withdrawn by mail, mailgram, or telegram received at any time before the exact time set for receipt of bids. Modifications or withdrawals sent by mail should be transmitted to the place of bid opening Standard Form SF1442 (Page 00010-1), Item 8. Telephone modifications or withdrawals, other

than telecopier, will not be accepted. All bid modifications or withdrawals must be signed by the bidder or its authorized representative. Any questions regarding these procedures should be directed to the Omaha District's Contracting Division at (402) 221-4333. This number should also be used to verify the receipt of messages.

9 BID GUARANTEE.

See Contract Clauses clause FAR 52.228-1, BID GUARANTEE. Bid guarantee MUST be in an original and accompanied by an original power of attorney of the surety.

10 PERFORMANCE AND PAYMENT BONDS.

See Contract Clauses clause FAR 52.228-15, PERFORMANCE AND PAYMENT BONDS. To have the bond considered valid, both the bond and the Power of Attorney must be original. Facsimile copies will not be acceptable, and will render the bid invalid, therefore eliminating it from competition.

(NOTE: FOR THE PURPOSES OF THIS SOLICITATION, THE WORD "ITEM" SHALL BE CONSIDERED TO MEAN "SCHEDULE.")

11 (FAR 52.214-19) CONTRACT AWARD - SEALED BIDDING - CONSTRUCTION (AUG 1996).

(a) The Government will evaluate bids in response to this solicitation without discussions and will award a contract to the responsible bidder whose bid, conforming to the solicitation, will be most advantageous to the Government, considering only price and the price-related factors specified elsewhere in the solicitation.

(b) The Government may reject any or all bids, and waive informalities or minor irregularities in bids received.

(c) The Government may accept any item or combination of items, unless doing so is precluded by a restrictive limitation in the solicitation of the bid.

(d) The Government may reject a bid as nonresponsive if the prices bid are materially unbalanced between line items or subline items. A bid is materially unbalanced when it is based on prices significantly less than cost for some work, and prices which are significantly overstated in relation to cost for other work, and if there is a reasonable doubt that the bid will result in the lowest overall cost to the Government even though it may be the low evaluated bid, of it is so unbalanced as to be tantamount to allowing an advance payment.

12 NORTH AMERICAN CLASSIFICATION SYSTEM (NAICS).

In accordance with NAICS Manual, the work in this solicitation is assigned classification code 234990.

13 SMALL BUSINESS SIZE STANDARD.

This solicitation is not limited to small business concerns, but, for definition purposes, a concern is small if its average annual receipts for its preceding 3 fiscal years did not exceed $28.5 million. (based on FAR 19.102)

14 **(FAR 52.214-3) AMENDMENTS TO INVITATIONS FOR BIDS (DECEMBER 1989).**

(a) If this solicitation is amended, then all terms and conditions which are not modified remain unchanged.
(b) Bidders shall acknowledge receipt of any amendment to this solicitation (1) by signing and returning the amendment, (2) by identifying the amendment number and date in the space provided for this purpose on the form for submitting a bid, (3) by letter or telegram or (4) by facsimile, if facsimile bids are authorized in the solicitation. The Government must receive the acknowledgment by the time and at the place specified for receipt of bids. (FAR 52.214-3.)

15 CHANGES PRIOR TO OPENING BIDS.

The right is reserved, as the interest of the Government may require, to revise the specifications and/or drawings prior to the date set for opening bids. Such revisions will be announced by an amendment or amendments to this Invitation for Bids. **It shall be the responsibility of the prospective bidder to obtain copies of amendments from the website listed in paragraph: PLAN HOLDER'S LIST below**. The Government may (but not required) send an amendment notification to let prospective bidders know that an amendment has been issued. If the revisions and amendments are of a nature which requires material changes in quantities or prices to be bid, the date set for opening bids may be postponed as necessary, in the opinion of the Commander, to enable bidders to revise their bids. In such cases, the amendment will include an announcement of the new date for opening bids.

16 (FAR 52.214-34) SUBMISSION OF OFFERS IN THE ENGLISH LANGUAGE (APR 1991)

Offers submitted in response to this solicitation shall be in the English language. Offers received in other than English shall be rejected.

(End of provision)

17 (FAR 52.214-35) SUBMISSION OF OFFERS IN U.S. CURRENCY (APR 1991)

Offers submitted in response to this solicitation shall be in terms of U.S. dollars. Offers received in other than U.S. dollars shall be rejected.

(End of provision)

18 (EFARS 52.214-5000) ARITHMETIC DISCREPANCIES.

(a) For the purpose of initial evaluation of bids, the following will

be utilized in resolving arithmetic discrepancies found on the face of the bidding schedule as submitted by the bidder:

(1) Obviously misplaced decimal points will be corrected;

(2) In case of discrepancy between unit price and extended price, the unit price will govern;

(3) Apparent errors in extension of unit prices will be corrected;

(4) Apparent errors in addition of lump sum and extended prices will be corrected.

(b) For the purposes of bid evaluation, the Government will proceed on the assumption that the bidder intends his bid to be evaluated on the basis of the unit prices, extensions, and totals arrived at by resolution of arithmetic discrepancies as provided above and the bid will be so reflected on the abstract of bids.

(c) These correction procedures shall not be used to resolve any ambiguity concerning which bid is low.

19 (FAR 52.217-5) EVALUATION OF OPTIONS (JUL 1990).

Except when it is determined in accordance with FAR 17.206(b) not to be in the Government's best interests, the Government will evaluate offers for award purposes by adding the total price for all options to the total price for the basic requirement. Evaluation of options will not obligate the Government to exercise the option(s).

20 OPTIONS.

The Government may reject an offer as nonresponsive if it is materially unbalanced as to prices for the basic requirement and the option quantities. An offer is unbalanced when it is based on prices significantly less than cost for some work and prices which are significantly overstated for other work.

21 AVAILABILITY OF SPECIFICATIONS, STANDARDS, AND DESCRIPTIONS.

Specifications, standards, and descriptions cited in this solicitation are available as indicated below:

21.1 (FAR 52.211-2) AVAILABILITY OF SPECIFICATIONS LISTED IN THE DOD INDEX OF SPECIFICATIONS AND STANDARDS (DODISS) AND DESCRIPTIONS LISTED IN THE ACQUISITION MANAGEMENT SYSTEMS AND DATA REQUIREMENTS CONTROL LIST, DOD 5010.12-L (DEC 1999).

Copies of specifications, standards, and data item descriptions cited in this solicitation may be obtained—

(a) From the ASSIST database via the Internet at

http://assist.daps.mil; or
(b) By submitting a request to the—

Department of Defense Single Stock Point (DoDSSP)
Building 4, Section D
700 Robbins Avenue
Philadelphia, PA 19111-5094
Telephone (215) 697-2667/2179
Facsimile (215) 697-1462.

(End of provision)

21.2 CORPS OF ENGINEERS SPECIFICATIONS.

Corps of Engineers specifications of the CRD-C series may be obtained from the National Institute of Building Sciences Construction Criteria Base (CCB) on CD-ROM. Contact the CCB directly at (202) 289-7800 for an order form or obtain an order form at the following internet address: http://www.ccb.org/ccbsubscribe/Subsmain.asp. There is a regular annual subscription fee to CCB of $700 per year. (Note: This is considered to be the Contractor's responsibility and cost). This will include CCB on CD-ROM or DVD plus unlimited internet access plus access to the new Whole Building Design Guide, now under construction and scheduled for launch in October 2001. Selected Corps of Engineers specifications of CRD-C series are available in Acrobat Reader .pdf file format at the following internet address: http://www.wes.army.mil/SL/MTC/handbook/handbook.htm.

21.3 COMMERCIAL (NON-GOVERNMENT) SPECIFICATIONS, STANDARDS, AND DESCRIPTIONS.

These specifications, standards, and descriptions are not available from Government sources. They may be obtained from the publishers.

22 AVAILABLE PLANT.

Each bidder shall, upon request of the Contracting Officer, furnish a list of the plant available to the bidder and proposed for use on the work.

23 EQUIPMENT OWNERSHIP AND OPERATING EXPENSE SCHEDULE.

Whenever a contract or modification of contract price is negotiated, the Contractor's cost proposals for equipment ownership and operating expenses shall be determined in accordance with the requirements of paragraph: EQUIPMENT OWNERSHIP AND OPERATING EXPENSE SCHEDULE, contained in Section: 00800, SPECIAL CONTRACT REQUIREMENTS of the specifications. A copy of EP 1110-1-8 "Construction Equipment Ownership and Operating Expense Schedule" is available for review at the office listed in paragraph: SITE VISIT (CONSTRUCTION) herein or at the following internet address: http://www.usace.army.mil/inet/usace-docs/eng-pamphlets/ep.htm. (copy also included on CD-ROM issued with this solicitation). .

24 NOTICE REGARDING BUY AMERICAN ACT.

The Buy American Act (41 U.S.C. 10a-10d) generally requires that only domestic construction material be used in the performance of this contract. Exception from the Buy American Act shall be permitted only in the case of nonavailability of domestic construction materials. A bid or proposal offering nondomestic construction material will not be accepted unless specifically approved by the Government. When a bidder or offeror proposes to furnish nondomestic construction material, his bid or proposal must set forth an itemization of the quantity, unit price, and intended use of each item of such nondomestic construction material. When offering nondomestic construction material pursuant to this paragraph, bids or proposals may also offer, at stated prices, any available comparable domestic construction material, so as to avoid the possibility that failure of a nondomestic construction material to be acceptable under this paragraph will cause rejection of the entire bid. All bidders are cautioned that, prior Government conduct notwithstanding, the Contractor's selection of a domestic construction material (as defined in FAR 52.225-5 Buy American Act-Construction Materials) which would require the subsequent selection of a foreign construction material for compatibility is not a justification for waiver of the Buy American Act. It is the Contractor's responsibility to verify, prior to submitting the materials for approval, that each system can be built to meet the contract specifications without the use of foreign construction materials.

25 IOWA SALES AND USE TAX.

The Contractor shall be responsible for payment of Iowa Sales and Use taxes with respect to all materials used under this contract. SECTION 00800: SPECIAL CONTRACT REQUIREMENTS, clause "IOWA SALES AND USE TAX," requires the Contractor to furnish to the Contracting Officer the statement required by Section 422.45 (7a), Iowa Code annotated, and to include in subcontracts and purchase orders a clause insuring submission of the statement by first-tier subcontractors and suppliers and their subcontractors and suppliers. Telephone: (515) 281-3114 (Department of Revenue).

26 (FAR 52.236-27) SITE VISIT (CONSTRUCTION) (FEB 1995).

(a) The clauses at 52.236-2, Differing Site Conditions, and 52.236-3, Site Investigations and Conditions Affecting the Work, will be included in any contract awarded as a result of this solicitation. Accordingly, offerors or quoters are urged and expected to inspect the site where the work will be performed.

(b) The site visit has been established for 03 June 2002, at 10:00 am. Contractors shall meet in the 4th floor conference room of the City Hall, 405 6th Street, Sioux City, Iowa. Contractors interested in inspecting the site of the proposed work need to make reservations by contacting Chris Payer, Sioux City Project Manager, City Hall Room 409, 405 6th Street, Sioux City, IA 51101, Phone Number 712-279-6401.

27 BIDDER'S QUESTIONS AND COMMENTS.

Questions and/or comments relative to these bidding documents should be submitted via e-mail or mailed to the address identified in paragraph: AVAILABILITY OF BID RESULTS below. Comments should reach this office no later than 20 calendar days prior to the date set for opening of bids, if feasible, in order that changes, if needed, may be added by amendment. E-mail addresses, FAX numbers, items for question and points of contact are listed below. Phone calls with questions should be made between 8:30 a.m. and 3:30 p.m. (Central Standard Time) Monday through Friday.

Note: A courtesy copy of all questions shall be sent to the Contract Specialist (Contractual Matters Point of Contact), the Program Manager and Specifications Section (Technical Content Points of Contact).

Items for Question	Points of Contact/ Phone numbers/ FAX Numbers	E-mail Addresses
Contractual Matters: Ordering CD-Rom of the plans and specifications (limit One per firm)/ amendments**/ Bid Results (See Paragraph AVAILABILITY OF BID RESULTS, below)/ Receipt of Bids	Sharon Coy 402-221-4333 (phone) 402-221-4199 (Fax)	Sharon.L.Coy@usace.army.mil
Planholder's List	See paragraph: PLAN HOLDER'S LIST, below.	
Small Business Matters	Hubert Carter 402-221-4110 (phone)	hubert.j.carter@usace.army.mil
Technical Contents Of Plans and Specification	Ed Haffke 402-221-3666 (phone)	Edward.O.Haffke@usace.army.mil
	Or	
	Specifications Section Marylee Stobbe 402-221-4411 (Phone) 402-221-3842 (Fax)	Marylee.F.Stobbe@usace.army.mil
Site Inspection	See Paragraph: SITE VISIT (CONSTRUCTION), above	

**** - The Government may elect to send a notification that an amendment has been posted to the Government's web address. It shall be the Contractor's, Subcontractor's and Supplier's responsibility to check the Government's web address for amendments.**

27.1 PLAN HOLDER'S LIST.

The CD-Rom will provide a list of plan holders that have registered at the time the CD-Rom was created. It is bidder's responsibility to check for any updates to the plan holder's list, which is available at the following web address:

http://ebs-nwo.wes.army.mil/

27.2 AVAILABILITY OF BID RESULTS (Local Clause/Provision)

Bid results will be available after bid opening on the Governent's web address:
http://ebs-nwo.wes.army.mil/. Official bid abstracts will be available and may be requested by sending a self-addressed stamped envelope to: U.S. Army Corps of Engineers, Omaha District, ATTN: CENWO-CT-C(Sharon Coy, 106 South 15th Street, Omaha, NE 68102-1618.

28 (FAR 52.233-2) SERVICE OF PROTEST (AUG 1996).

(a) Protests, as defined in section 33.101 of the Federal Acquisition Regulation, that are filed directly with an agency, and copies of any protests that are filed with the General Accounting Office (GAO), shall be served on the Contracting Officer (addressed as follows) by obtaining written and dated acknowledgement of receipt from District Counsel, 106 South 15th Street, Omaha, Nebraska 68102-1618.

(b) The copy of any protest shall be received in the office designated above within one day of filing a protest with the GAO.

29 PRE-AWARD SURVEY INFORMATION (Local Provision) (Sep 93)

In accordance with Paragraph PERFORMANCE AND PAYMENT BONDS, request that the following information be submitted with your bid. This facilitates the award process.

1. Financial
   - Name, address, and fax number of Financial Institution
   - Name and phone number of finance individual (primary and alternate) to be contacted for information

2. Bonding Information
   - Provide the name, address, regular phone number and fax number of your Surety Company.

3. Performance

- Provide three (3) references to be contacted on your company's performance

The following information should be submitted:

Name and Fax number of Owner/User

Project Name, Location, Contract Number, and dollar value

Name and phone number of individuals (primary and alternate) that can verify performance of the project

30 (FAR 52.204-6) DATA UNIVERSAL NUMBERING SYSTEM (DUNS) NUMBER (JUNE 1999)

(a) The offeror shall enter, in the block with its name and address on the cover page of its offer, the annotation "DUNS" followed by the DUNS number that identifies the offeror's name and address exactly as stated in the offer. The DUNS number is a nine-digit number assigned by Dun and Bradstreet Information Services.

(b) If the offeror does not have a DUNS number, it should contact Dun and Bradstreet directly to obtain one. A DUNS number will be provided immediately by telephone at no charge to the offeror. For information on obtaining a DUNS number, the offeror, if located within the United States, should call Dun and Bradstreet at 1-800-333-0505. The offeror should be prepared to provide the following information:

(1) Company name.

(2) Company address.

(3) Company telephone number.

(4) Line of business.

(5) Chief executive officer/key manager.

(6) Date the company was started.

(7) Number of people employed by the company.

(8) Company affiliation.

(c) Offerors located outside the United States may obtain the location and phone number of the local Dun and Bradstreet Information Services office from the Internet home page at http://www.customerservice@dnb.com. If an offeror is unable to locate a local service center, it may send an e-mail to Dun and Bradstreet at globalinfo@mail.dnb.com.

(End of provision)

31 (FAR 52.216-1) TYPE OF CONTRACT (APR 1984).

The Government contemplates award of a Firm Fixed Price contract resulting from this solicitation.

32 SUBCONTRACTING PLAN/SUBCONTRACTING GOALS REGARDING THE UTILIZATION OF

SMALL BUSINESS CONCERNS.

a. Application. This clause applies only to large business concerns submitting bids for services exceeding $500,000 or for construction exceeding $1,000,000.

b. Federal Acquisition Regulations (FAR). Attention is directed to the following FAR provisions contained in this solicitation:

52.219-8, Utilization of Small Business Concerns (Alternate I)

52.219-9, Small Business Subcontracting Plan (Alternate I)

52.219-16, Liquidated Damages - Small Business Subcontracting Plan

52.226-1, Utilization of Indian Organizations and Indian-Owned Economic Enterprises

c. Goals. The U.S. Army Corps of Engineers considers the following goals reasonable and achievable for fiscal year 2002 and for the performance of the resultant contract:

(1) 61.4% of planned subcontracting dollars with small business concerns.

(2) 9.1% of planned subcontracting dollars with those small business concerns owned and controlled by socially and economically disadvantaged individuals.

(3) 5.0% of planned subcontracting dollars with those small business concerns owned and controlled by women.

(4) 3.0% of planned subcontracting dollars with those small business concerns owned and controlled by Severely Disable Veterans.

(5) 2.5% of planned subcontracting dollars with those small business concerns owned and controlled by HubZones.

d. Submission and Review of Subcontracting Plan.

SUBMISSION OF SMALL BUSINESS SUBCONTRACTING PLAN IS NOT APPLICABLE TO SMALL BUSINESSES.

(1) The apparent low bidder must submit a subcontracting plan within five (5) calendar days after bid opening (a longer period maybe granted by the Contracting Officer upon request) within 24 hours after notification by the Government to the Contracting Activity.

(2) Goals included in the subcontracting plan should be at least equal to those indicated above. If lesser goals are proposed, the bidder may be required to substantiate how the proposed plan represents the bidder's best effort to comply with the terms and conditions of the solicitation. Bidders are highly encouraged to become familiar with the

intent of the solicitation provisions and the elements of the subcontracting plan.

(3) The subcontracting plan must contain, as a minimum, the elements set forth in FAR provision 52.219-9. An example subcontracting plan will be furnished to the apparent low bidder (upon request). The example subcontracting plan (if requested) should not be construed as an acceptable subcontracting plan. Any format will be acceptable provided that the plan addresses each element as required by the Federal Acquisition Regulations and its supplements.

(4) Proposed plans will be reviewed by the Government to ensure the plan represents the firm's best efforts to maximize subcontracting opportunities for small, small disadvantaged and women-owned businesses.

(5) Subcontracting plans are required to be approved prior to Contract Award. The approved subcontracting plan (to include goals) will become a material part of the contract.

e. Failing to Submit An Acceptable Subcontracting Plan. An apparent low bidder failing to submit a subcontracting plan which demonstrates a reasonable effort to meet the goals listed above or provide an explanation why lesser goals are proposed (upon request), will be considered as non-responsive and not considered eligible for award of the contract.

f. Questions or Assistance Needed in Developing Subcontracting Plan. For any questions or assistance needed in developing the subcontracting plan, contact the Contract Specialist or District's Deputing for Small Business (See paragraph: BIDDER QUESTIONS AND COMMENTS, Contract Specialist [Bid Results] or the District's Deputy for Small Business [Small Business] or fax your inquiries to 402-221-4199).

33 (DFARS 252.204-7004) REQUIRED CENTRAL CONTRACTOR REGISTRATION (NOV 2001)

(a) Definitions.

As used in this clause--

(1) "Central Contractor Registration (CCR database" means the primary DoD repository for contractor information required for the conduct of business with DoD.

(2) "Data Universal Numbering System (DUNS) number" means the 9-digit number assigned by Dun and Bradstreet Information Services to identify unique business entities.

(3) "Data Universal Numbering System +4 (DUNS+4) number" means the DUNS number assigned by Dun and Bradstreet plus a 4-digit suffix that may be assigned by a parent (controlling) business concern. This 4-digit suffix may be assigned at the discretion of the parent business concern for such purposes as identifying subunits or affiliates of the parent business concern.

(4) “Registered in the CCR database” means that all mandatory information, including the DUNS number or the DUNS+4 number, if applicable, and the corresponding Commercial and Government Entity (CAGE) code, is in the CCR database; the DUNS number and the CAGE code have been validated; and all edits have been successfully completed.

(b)(1) By submission of an offer, the offeror acknowledges the requirement that a prospective awardee must be registered in the CCR database prior to award, during performance, and through final payment of any contract resulting from this solicitation, except for awards to foreign vendors for work to be performed outside the United States.

(2) The offeror shall provide its DUNS or, if applicable, its DUNS+4 number with its offer, which will be used by the Contracting Officer to verify that the offeror is registered in the CCR database.

(3) Lack of registration in the CCR database will make an offeror ineligible for award.

(4) DoD has established a goal of registering an applicant in the CCR database within 48 hours after receipt of a complete and accurate application via the Internet. However, registration of an applicant submitting an application through a method other than the Internet may take up to 30 days. Therefore, offerors that are not registered should consider applying for registration immediately upon receipt of this solicitation.

(c) The Contractor is responsible for the accuracy and completeness of the data within the CCR, and for any liability resulting from the Government's reliance on inaccurate or incomplete data. To remain registered in the CCR database after the initial registration, the Contractor is required to confirm on an annual basis that its information in the CCR database is accurate and complete.

(d) Offerors and contractors may obtain information on registration and annual confirmation requirements by calling 1-888-227-2423, or via the Internet at http://www.ccr.gov.

(End of clause)

REQUIRED CENTRAL CONTRACTOR REGISTRATION (CCR)

Register Now: Don't wait until you submit an offer on a solicitation. You must be registered to receive the contract award. It can often take 30 days for CCR to process your registration information.

Register One of Three Ways:

Internet: http://www.ccr.gov

Value Added Network (VAN) for EDI users: Contact your VAN for information. If you need to find a VAN look at http://www.acq.osd.mil/ec/ecip/van_list.htm

FAX or Mail: Call (888)227-2423 or (616)961-4725 to receive a registration package. FAX or mail the completed information to the CCR Assistance Center. It can take up to 30 days to process a faxed or mailed package.

CCR Assistance Center
74 Washington Street North, Suite 7
Battle Creek, MI 49017-3084
FAX: (616)961-7243

SECTION 00600
REPRESENTATIONS, CERTIFICATIONS & OTHER STATEMENTS OF BIDDERS

INDEX

1. (FAR 52.203-2) CERTIFICATE OF INDEPENDENT PRICE DETERMINATION (APR 1985).
2. (FAR 52.203-11) CERTIFICATION AND DISCLOSURE REGARDING PAYMENTS TO INFLUENCE CERTAIN FEDERAL TRANSACTIONS (APR 1991).
3. (FAR 52.204-3) TAXPAYER IDENTIFICATION (OCT 1998).
4. (FAR 52.204-5) WOMEN-OWNED BUSINESS (OTHER THAN SMALL BUSINESS) [MAY 1999]
5. (DFARS 252.204-7001) COMMERCIAL AND GOVERNMENT ENTITY (CAGE) CODE REPORTING (AUG 1999).
6. (FAR 52.209-5) CERTIFICATION REGARDING DEBARMENT, SUSPENSION, PROPOSED DEBARMENT, AND OTHER RESPONSIBILITY MATTERS (DEC 2001).
7. (DFARS 252.209-7001) DISCLOSURE OF OWNERSHIP OR CONTROL BY A FOREIGN GOVERNMENT THAT SUPPORTS TERRORISM (MAR 1998). [For Contracts exceeding $100,000]
8. (FAR 52.211-6) BRAND NAME OR EQUAL (AUG 1999).
9. RESERVED
10. RESERVED
11. (FAR 52.219-1) SMALL BUSINESS PROGRAM REPRESENTATIONS (APR 2002) ALTERNATE I (APR 2002)
12. (FAR 52.219-2) EQUAL LOW BIDS (OCT 1995)
13. RESERVED
14. (FARS 52.219-19) SMALL BUSINESS CONCERN REPRESENTATION FOR THE SMALL BUSINESS COMPETITIVENESS DEMONSTRATION PROGRAM (OCT 2000).
15. (FARS 52.219-21) SMALL BUSINESS SIZE REPRESENTATION FOR TARGETED INDUSTRY CATEGORIES UNDER THE SMALL BUSINESS COMPETITIVENESS DEMONSTRATION PROGRAM (MAY 1999).
16. (FAR 52.222-21) CERTIFICATION OF NONSEGREGATED FACILITIES (FEB 1999)
17. (FAR 52.222-22) PREVIOUS CONTRACTS AND COMPLIANCE REPORTS (FEB 1999).
18. (FAR 52.223-4) RECOVERED MATERIAL CERTIFICATION (OCT 1997)
19. (FAR 52.223-13) CERTIFICATION OF TOXIC CHEMICAL RELEASE REPORTING (OCT 2000) [For Contracts over $100,000]
20. (DFARS 252.225-7031) SECONDARY ARAB BOYCOTT OF ISRAEL (JUN 1992)
21. (DFARS 252.247-7022) REPRESENTATION OF EXTENT OF TRANSPORTATION BY SEA (AUG 1992).

SECTION 00600
REPRESENTATIONS, CERTIFICATIONS & OTHER STATEMENTS OF BIDDERS

The bidder (offeror) makes the following certification and representations as a part of the bid, shall check the appropriate boxes, fill in the appropriate information, and provide signatures on the attached "Solicitation Form" (00600) pages, and submit with Standard Form 1442 (Section 00010).

1. (FAR 52.203-2) CERTIFICATE OF INDEPENDENT PRICE DETERMINATION (APR 1985).

(a) The offeror certifies that -

(1) The prices in this offer have been arrived at independently, without, for the purpose of restricting competition, any consultation, communication, or agreement with any other offeror or competitor relating to (i) those prices, (ii) the intention to submit an offer, or (iii) the methods or factors used to calculate the prices offered;

(2) the prices in this offer have not been and will not be knowingly disclosed by the offeror, directly or indirectly, to any other offeror or competitor before bid opening (in the case of a Sealed Bid solicitation) or contract award (in the case of a negotiated solicitation) unless otherwise required by law; and

(3) no attempt has been made or will be made by the offeror to induce any other concern to submit or not to submit an offer for the purpose of restricting competition.

(b) Each signature on the offer is considered to be a certification by the signatory that the signatory -

(1) is the person in the offeror's organization responsible for determining the prices being offered in this bid or proposal, and that the signatory has not participated and will not participate in any action contrary to subparagraphs (a)(1) through (a)(3) above; or

(2)(i) has been authorized, in writing, to act as agent for the following principals in certifying that those principals have not participated, and will not participate in any action contrary to subparagraphs (a)(1) through (a)(3) above

_____

_____

_____ [insert full name of person(s) in the offeror's organization responsible for determining the prices offered in this bid or proposal, and the title of his or her position in the offeror's organization];

(ii) as an authorized agent, does certify that the principals named in subdivision (b)(2)(i) above have not participated, and will not participate, in any action contrary to subparagraphs (a)(1) through (a)(3) above; and

(iii) as an agent, has not personally participated, and will not participate, in any action contrary to subparagraphs (a)(1) through (a)(3) above.

(c) If the offeror deletes or modifies subparagraph (a)(2) above, the offeror must furnish with its offer a signed statement setting forth in detail the circumstances of the disclosure.

2. (FAR 52.203-11) CERTIFICATION AND DISCLOSURE REGARDING PAYMENTS TO INFLUENCE CERTAIN FEDERAL TRANSACTIONS (APR 1991).

(a) The definitions and prohibitions contained in the clause, at FAR 52.203-12, Limitation on Payments to Influence Certain Federal Transactions, included in this solicitation, are hereby incorporated by reference in paragraph (b) of this certification.

(b) The offeror, by signing its offer, hereby certifies to the best of his or her knowledge and belief that on or after December 23, 1989, -

(1) No Federal appropriated funds have been paid or will be paid to any person for influencing or attempting to influence an officer or employee of any agency, a Member of Congress, an officer or employee of Congress, or an employee of a Member of Congress on his or her behalf in connection with the awarding of any Federal contract, the making of any Federal grant, the making of any Federal loan, the entering into of any cooperative agreement, and the extension, continuation, renewal, amendment or modification of any Federal contract, grant, loan, or cooperative agreement;

(2) If any funds other than Federal appropriated funds (including profit or fee received under a covered Federal transaction) have been paid, or will be paid, to any person for influencing or attempting to influence an officer or employee of any agency, a Member of Congress, an officer or employee of Congress, or an employee of a Member of Congress on his or her behalf in connection with this solicitation, the offeror shall complete and submit, with its offer, OMB standard form LLL, Disclosure of Lobbying Activities, to the Contracting Officer; and

(3) He or she will include the language of this certification in all subcontract awards at any tier and require that all recipients of subcontract awards in excess of $100,000 shall certify and disclose accordingly.

(c) Submission of this certification and disclosure is a prerequisite for making or entering into this contract imposed by section 1352, title 31, United States Code. Any person who makes an expenditure prohibited under this provision or who fails to file or amend the disclosure form to be filed or amended by this provision, shall be subject to a civil penalty of not less than $10,000, and not more than $100,000, for each such failure.

3. (FAR 52.204-3) TAXPAYER IDENTIFICATION (OCT 1998).

(a) Definitions.

"Common parent," as used in this provision, means that corporate entity that owns or controls an affiliated group of corporations that files its Federal income tax returns on a consolidated basis, and of which the offeror is a member.

"Taxpayer Identification Number (TIN)," as used in this provision, means the number required by the Internal Revenue Service (IRS) to be used by the offeror in reporting income tax and other returns. The TIN may be either a Social Security Number or an Employer Identification Number.

(b) All offerors must submit the information required in paragraphs (d) through (f) of this provision to comply with debt collection requirements of 31 U.S.C. 7701(c) and 3325(d), reporting requirements of 26 U.S.C. 6041, 6041A, and 6050M, and implementing regulations issued by the IRS. If the resulting contract is subject to the payment reporting requirements described in Federal Acquisition Regulation (FAR) 4.904, the failure or refusal by the offeror to furnish the information may result in a 31 percent reduction of payments otherwise due under the contract.

(c) The TIN may be used by the Government to collect and report on any delinquent amounts arising out of the offeror's relationship with the Government (31 U.S.C. 7701(c)(3)). If the resulting contract is subject to the payment reporting requirements described in FAR 4.904, the TIN provided hereunder may be matched with IRS records to verify the accuracy of the offeror's TIN.

(d) Taxpayer Identification Number (TIN).

[ ] TIN: _____.

[ ] TIN has been applied for.

[ ] TIN is not required because:

[ ] Offeror is a nonresident alien, foreign corporation, or foreign partnership that does not have income effectively connected with the conduct of a trade or business in the United States and does not have an office or place of business or a fiscal paying agent in the United States;

[ ] Offeror is an agency or instrumentality of a foreign government;

[ ] Offeror is an agency or instrumentality of the Federal Government.

(e) Type of organization.

[ ] Sole proprietorship;

[ ] Partnership;

[ ] Corporate entity (not tax-exempt);

[ ] Corporate entity (tax-exempt);

[ ] Government entity (Federal, State, or local);

[ ] Foreign government;

[ ] International organization per 26 CFR 1.6049-4;

[ ] Other _____.

(f) Common parent.

[ ] Offeror is not owned or controlled by a common parent as defined in paragraph (a) of this provision.

[ ] Name and TIN of common parent:

Name _____

TIN _____

(End of provision)

4. (FAR 52.204-5) WOMEN-OWNED BUSINESS (OTHER THAN SMALL BUSINESS) [MAY 1999]

(a) *Definition.* Women-owned business concern, as used in this provision, means a concern that is

at least 51 percent owned by one or more women; or in the case of any publicly owned business, at least 51 percent of its stock is owned by one or more women; and whose management and daily business operations are controlled by one or more women.

(b) *Representation. [Complete only if the offeror is a women-owned business concern and has not represented itself as a small business concern in paragraph (b)(1) of FAR 52.219–1, Small Business Program Representations, of this solicitation.]* The offeror represents that it [ ] is a women-owned business concern.
(End of provision)

5. (DFARS 252.204-7001) COMMERCIAL AND GOVERNMENT ENTITY (CAGE) CODE REPORTING (AUG 1999).

(a) The offeror is requested to enter its CAGE code on its offer in the block with its name and address. The CAGE code entered must be for that name and address. Enter "CAGE" before the number.

(b) If the offeror does not have a CAGE code, it may ask the Contracting Officer to request one from the Defense Logistics Information Service (DLIS). The Contracting Officer will-

(1) Ask the Contractor to complete section B of a DD Form 2051, Request for Assignment of a Commercial and Government Entity (CAGE) Code;

(2) Complete section A and forward the form to DLIS; and

(3) Notify the Contractor of its assigned CAGE code.

(c) Do not delay submission of the offer pending receipt of a CAGE code.

6. (FAR 52.209-5) CERTIFICATION REGARDING DEBARMENT, SUSPENSION, PROPOSED DEBARMENT, AND OTHER RESPONSIBILITY MATTERS (DEC 2001).

(a)(1) The Offeror certifies, to the best of its knowledge and belief, that—
(i) The Offeror and/or any of its Principals—
(A) Are [ ] are not [ ] presently debarred, suspended, proposed for debarment, or declared ineligible for the award of contracts by any Federal agency;
(B) Have [ ] have not [ ], within a three-year period preceding this offer, been convicted of or had a civil judgment rendered against them for: commission of fraud or a criminal offense in connection with obtaining, attempting to obtain, or performing a public (Federal, state, or local) contract or subcontract; violation of Federal or state antitrust statutes relating to the submission of offers; or commission of embezzlement, theft, forgery, bribery, falsification or destruction of records, making false statements, tax evasion, or receiving stolen property; and
(C) Are [ ] are not [ ] presently indicted for, or otherwise criminally or civilly charged by a governmental entity with, commission of any of the offenses enumerated in paragraph (a)(1)(i)(B) of this provision.
(ii) The Offeror has [ ] has not [ ], within a three-year period preceding this offer, had one or more contracts terminated for default by any Federal agency.
(2) "Principals," for the purposes of this certification, means officers; directors; owners; partners; and, persons having primary management or supervisory responsibilities within a business entity (*e*.g., general manager; plant manager; head of a subsidiary, division, or business segment, and similar positions).

This Certification Concerns a Matter Within the Jurisdiction of an Agency of the United States and the Making of a False, Fictitious, or Fraudulent Certification May Render the Maker Subject

to Prosecution Under Section 1001, Title 18, United States Code.

(b) The Offeror shall provide immediate written notice to the Contracting Officer if, at any time prior to contract award, the Offeror learns that its certification was erroneous when submitted or has become erroneous by reason of changed circumstances.

(c) A certification that any of the items in paragraph (a) of this provision exists will not necessarily result in withholding of an award under this solicitation. However, the certification will be considered in connection with a determination of the Offeror's responsibility. Failure of the Offeror to furnish a certification or provide such additional information as requested by the Contracting Officer may render the Offeror nonresponsible.

(d) Nothing contained in the foregoing shall be construed to require establishment of a system of records in order to render, in good faith, the certification required by paragraph (a) of this provision. The knowledge and information of an Offeror is not required to exceed that which is normally possessed by a prudent person in the ordinary course of business dealings.

(e) The certification in paragraph (a) of this provision is a material representation of fact upon which reliance was placed when making award. If it is later determined that the Offeror knowingly rendered an erroneous certification, in addition to other remedies available to the Government, the Contracting Officer may terminate the contract resulting from this solicitation for default. (End of Provision)

7. (DFARS 252.209-7001) DISCLOSURE OF OWNERSHIP OR CONTROL BY A FOREIGN GOVERNMENT THAT SUPPORTS TERRORISM (MAR 1998). [For Contracts exceeding $100,000]

(a) Definitions.

As used in this provision-

(1) "Government of a terrorist country" includes the state and the government of a terrorist country, as well as any political subdivision, agency, or instrumentality thereof.

(2) "Terrorist country" means a country determined by the Secretary of State, under section 6(j)(1)(A)) of the Export Administration Act of 1979 (50 U.S.C. App. 2405(j)(i)(A)), to be a country the government of which has repeatedly provided support for acts of international terrorism. As of the date of this provision, terrorist countries include: Cuba, Iran, Iraq, Libya, North Korea, Sudan, and Syria.

(3) "Significant interest" means-

(i) Ownership of or beneficial interest in 5 percent or more of the firm's or subsidiary's securities. Beneficial interest includes holding 5 percent or more of any class of the firm's securities in "nominee shares," "street names," or some other method of holding securities that does not disclose the beneficial owner;

(ii) Holding a management position in the firm, such as a director or officer;

(iii) Ability to control or influence the election, appointment, or tenure of directors or officers in the firm;

(iv) Ownership of 10 percent or more of the assets of a firm such as equipment, buildings, real estate, or other tangible assets of the firm; or

(v) Holding 50 percent or more of the indebtedness of a firm.

(b) Prohibition on award. In accordance with 10 U.S.C. 2327, no contract may be awarded to a firm or a subsidiary of a firm if the government of a terrorist country has a significant interest in the firm or subsidiary [or, in the case of a subsidiary, the firm that owns the subsidiary], unless a waiver is granted by the Secretary of Defense.

(c) Disclosure.

The Offeror shall disclose any significant interest the government of each of the following countries has in the Offeror or a subsidiary of the Offeror. If the Offeror is a subsidiary, it shall also disclose any significant interest the government of a terrorist country has in any firm that owns or controls the subsidiary. The disclosure shall include--

(1) Identification of each government holding a significant interest; and
(2) A description of the significant interest held by each Government.
(End of provision)

8. (FAR 52.211-6) BRAND NAME OR EQUAL (AUG 1999).

(a) If an item in this solicitation is identified as "brand name or equal," the purchase description reflects the characteristics and level of quality that will satisfy the Government's needs. The salient physical, functional, and other characteristics that "equal" products must meet are specified in the solicitation.

(b) To be considered for award, offers of "equal" products, including "equal" products of the brand name manufacturer, must--

(1) Meet the salient physical, functional, and other characteristics specified in the solicitation;

(2) Clearly identify the item by--

(i) Brand name, if any; and

(ii) Make or model number;

(3) Include descriptive literature such as cuts, illustrations, drawings, or a clear reference to previously furnished descriptive data or information available to the Contracting Officer; and

(4) Clearly describe any modifications the offeror plans to make in a product to make it conform to the solicitation requirements. Mark any descriptive material to clearly show the modifications.

(c) The Contracting Officer will evaluate "equal" products on the basis of information by the offeror or identified in the offer and reasonably available to the Contracting Officer. The Contracting Officer is not responsible for locating or securing any information not identified in the offer.

(d) Unless the offeror clearly indicates in its offer that the product being offered is an "equal" product, the offeror shall provide the brand name product referenced in the solicitation.

9. RESERVED

10. RESERVED

11. (FAR 52.219-1) SMALL BUSINESS PROGRAM REPRESENTATIONS (APR 2002) ALTERNATE I (APR 2002)

(a)(1) The North American Industry Classification System (NAICS) code for this acquisition is _____ [*insert NAICS code*].

(2) The small business size standard is _____ [*insert size standard*].

(3) The small business size standard for a concern which submits an offer in its own name, other than on a construction or service contract, but which proposes to furnish a product which it did not itself manufacture, is 500 employees.

(b) *Representations*. (1) The offeror represents as part of its offer that it [ ]✍ is, [ ] is not a small

business concern.

(2) [*Complete only if the offeror represented itself as a small business concern in paragraph (b)(1) of this provision.*] The offeror represents, for general statistical purposes, that it [ ] is, [ ] is not, a small disadvantaged business concern as defined in 13 CFR 124.1002.

(3) [*Complete only if the offeror represented itself as a small business concern in paragraph (b)(1) of this provision.*] The offeror represents as part of its offer that it [ ] is, [ ] is not a women-owned small business concern.

(4) [*Complete only if the offeror represented itself as a small business concern in paragraph (b)(1) of this provision.*] The offeror represents as part of its offer that it [ ] is, [ ] is not a veteran-owned small business concern.

(5) [*Complete only if the offeror represented itself as aveteran-owned small business concern in paragraph (b)(4) of this provision.*] The offeror represents as part of its offer that it [ ] is, [ ] is not a service-disabled veteran-owned small business concern.

(6) *[Complete only if the offeror represented itself as a small business concern in paragraph (b)(1) of this provision.*] The offeror represents, as part of its offer, that—

(i) It [ ] is, [ ] is not a HUBZone small business concern listed, on the date of this representation, on the List of Qualified HUBZone Small Business Concerns maintained by the Small Business Administration, and no material change in ownership and control, principal office, or HUBZone employee percentage has occurred since it was certified by the Small Business Administration in accordance with 13 CFR part 126; and

(ii) It [ ] is, [ ] is not a joint venture that complies with the requirements of 13 CFR part 126, and the representation in paragraph (b)(6)(i) of this provision is accurate for the HUBZone small business concern or concerns that are participating in the joint venture. [*The offeror shall enter the name or names of the HUBZone small business concern or concerns that are participating in the joint venture:*_____.] Each HUBZone small business concern participating in the joint venture shall submit a separate signed copy of the HUBZone representation.

(7) [*Complete if offeror represented itself as disadvantaged in paragraph (b)(2) of this provision.*] The offeror shall check the category in which its ownership falls:

_____ Black American.

_____ Hispanic American.

_____ Native American (American Indians, Eskimos, Aleuts, or Native Hawaiians).

_____ Asian-Pacific American (persons with origins from Burma, Thailand, Malaysia, Indonesia, Singapore, Brunei, Japan, China, Taiwan, Laos, Cambodia (Kampuchea),Vietnam, Korea, The Philippines, U.S. Trust Territory of the Pacific Islands (Republic of Palau), Republic of the Marshall Islands, Federated States of Micronesia, the Commonwealth of the Northern Mariana Islands, Guam, Samoa, Macao, Hong Kong, Fiji, Tonga, Kiribati, Tuvalu, or Nauru).

_____ Subcontinent Asian (Asian-Indian) American (persons with origins from India, Pakistan, Bangladesh, Sri Lanka, Bhutan, the Maldives Islands, or Nepal).

_____ Individual/concern, other than one of the preceding.

(c) *Definitions.* As used in this provision—

"Service-disabled veteran-owned small business concern"—

(1) Means a small business concern—

(i) Not less than 51 percent of which is owned by one or more service-disabled veterans or, in the case of any publicly owned business, not less than 51 percent of the stock of which is owned by one or more service-disabled veterans; and

(ii) The management and daily business operations of which are controlled by one or more service-disabled veterans or, in the case of a veteran with permanent and severe disability, the spouse or permanent caregiver of such veteran.

(2) Service-disabled veteran means a veteran, as defined in 38 U.S.C. 101(2), with a disability that is service connected, as defined in 38 U.S.C. 101(16).

"Small business concern" means a concern, including its affiliates, that is independently owned and operated, not dominant in the field of operation in which it is bidding on Government contracts, and qualified as a small business under the criteria in 13 CFR part 121 and the size standard in paragraph (a) of this provision.

"Veteran-owned small business concern" means a small business concern—

(1) Not less than 51 percent of which is owned by one or more veterans (as defined at 38 U.S.C. 101(2)) or, in the case of any publicly owned business, not less than 51 percent of the stock of which is owned by one or more veterans; and

(2) The management and daily business operations of which are controlled by one or more veterans.

"Women-owned small business concern" means a small business concern—

(1) That is at least 51 percent owned by one or more women; or, in the case of any publicly owned business, at least 51 percent of the stock of which is owned by one or more women; and

(2) Whose management and daily business operations are controlled by one or more women.

(d) *Notice.* (1) If this solicitation is for supplies and has been set aside, in whole or in part, for small business concerns, then the clause in this solicitation providing notice of the set-aside contains restrictions on the source of the end items to be furnished.

(2) Under 15 U.S.C. 645(d), any person who misrepresents a firm's status as a small, HUBZone small, small disadvantaged, or women-owned small business concern in order to obtain a contract to be awarded under the preference programs established pursuant to section 8(a), 8(d), 9, or 15 of the Small Business Act or any other provision of Federal law that specifically references section 8(d) for a definition of program eligibility, shall—

(i) Be punished by imposition of fine, imprisonment, or both;

(ii) Be subject to administrative remedies, including suspension and debarment; and

(iii) Be ineligible for participation in programs conducted under the authority of the Act.

(End of provision)

12. (FAR 52.219-2) <u>EQUAL LOW BIDS (OCT 1995)</u>

(a) This provision applies to small business concerns only.

(b) The bidder's status as a labor surplus area (LSA) concern may affect entitlement to award in case of tie bids. If the bidder wishes to be considered for this priority, the bidder must identify, in the following space, the LSA in which the costs to be incurred on account of manufacturing or production (by the bidder or the first-tier subcontractors) amount to more than 50 percent of the contract price.

_____ _____

_____ _____

(c) Failure to identify the labor surplus areas as specified in paragraph (b) of this provision will preclude the bidder from receiving priority consideration. If the bidder is awarded a contract as a result of receiving priority consideration under this provision and would not have otherwise received award, the bidder shall perform the contract or cause the contract to be performed in accordance with the obligations of an LSA concern.

13. RESERVED

14. (FARS 52.219-19) SMALL BUSINESS CONCERN REPRESENTATION FOR THE SMALL BUSINESS COMPETITIVENESS DEMONSTRATION PROGRAM (OCT 2000).

(a) *Definition.* "Emerging small business" as used in this solicitation, means a small business concern whose size is no greater than 50 percent of the numerical size standard applicable to the North American Industry Classification System (NAICS) code assigned to a contracting opportunity.

(b) (Complete only if Offeror has represented itself under the provision at FAR 52.219-1 as a small business concern under the size standards of this solicitation.) The Offeror [ ] is, [ ] is not an emerging small business.

(c) (Complete only if the Offeror is a small business or an emerging small business, indicating its size range.)

Offeror's number of employees for the past 12 months (check this column if size standard stated in solicitation is expressed in terms of number of employees) or Offeror's average annual gross revenue for the last 3 fiscal years (check this column if size standard stated in solicitation is expressed in terms of annual receipts). (Check one of the following.)

No. of Employees	Average Annual Gross Revenues
_____50 or fewer	_____$1 million or less
_____51 - 100	_____$1,000,001 - $2 million
_____101 - 250	_____$2,000,001 - $3.5 million
_____251 - 500	_____$3,500,001 - $5 million
_____501 - 750	_____$5,000,001 - $10 million
_____751 - 1,000	_____$10,000,001 - $17 million
_____Over 1,000	_____Over $17 million

15. (FARS 52.219-21) SMALL BUSINESS SIZE REPRESENTATION FOR TARGETED INDUSTRY CATEGORIES UNDER THE SMALL BUSINESS COMPETITIVENESS DEMONSTRATION PROGRAM (MAY 1999).

[Complete only if the Offeror has represented itself under the provision at 52.219-1 as a small business concern under the size standards of this solicitation.]

Offeror's number of employees for the past 12 months *[check this column if size standard stated in solicitation is expressed in terms of number of employees]* or Offeror's average annual gross revenue for the last 3 fiscal years [check this column if size standard in solicitation is expressed in terms of annual receipts]. *[Check one of the following.]*

No. of Employees	Average Annual Gross Revenues
_____50 or fewer	_____$1 million or less
_____51 - 100	_____$1,000,001 - $2 million
_____101 - 250	_____$2,000,001 - $3.5 million
_____251 - 500	_____$3,500,001 - $5 million
_____501 - 750	_____$5,000,001 - $10 million
_____751 - 1,000	_____$10,000,001 - $17 million
_____Over 1,000	_____Over $17 million

16. (FAR 52.222-21) CERTIFICATION OF NONSEGREGATED FACILITIES (FEB 1999)

(a) "Segregated facilities," as used in this clause, means any waiting rooms, work areas, rest rooms and wash rooms, restaurants and other eating areas, time clocks, locker rooms and other storage or dressing areas, parking lots, drinking fountains, recreation or entertainment areas, transportation, and housing facilities provided for employees, that are segregated by explicit directive or are in fact segregated on the basis of race, color, religion, sex, or national origin because of written or oral policies or employee custom. The term does not include separate or single-user rest rooms or necessary dressing or sleeping areas provided to assure privacy between the sexes.

(b) The Contractor agrees that it does not and will not maintain or provide for its employees any segregated facilities at any of its establishments, and that it does not and will not permit its employees to perform their services at any location under its control where segregated facilities are maintained. The Contractor agrees that a breach of this clause is a violation of the Equal Opportunity clause in this contract.

(c) The Contractor shall include this clause in every subcontract and purchase order that is subject to the Equal Opportunity clause of this contract.

(End of clause)

17. (FAR 52.222-22) PREVIOUS CONTRACTS AND COMPLIANCE REPORTS (FEB 1999).

The offeror represents that—

(a) It [ ] has, [ ] has not participated in a previous contract or subcontract subject the Equal Opportunity clause of this solicitation;

(b) It [ ] has, [ ] has not filed all required compliance reports; and

(c) Representations indicating submission of required compliance reports, signed by proposed subcontractors, will be obtained before subcontract awards.

(End of provision)

18. (FAR 52.223-4) RECOVERED MATERIAL CERTIFICATION (OCT 1997)

As required by the Resource Conservation and Recovery Act of 1976 (42 U.S.C. 6962(c)(3)(A)(i)), the offeror certifies, by signing this offer, that the percentage of recovered materials to be used in the performance of the contract will be at least the amount required by the applicable contract specifications.

(End of provision)

19. (FAR 52.223-13) CERTIFICATION OF TOXIC CHEMICAL RELEASE REPORTING (OCT 2000) [For Contracts over $100,000]

(a) Submission of this certification is a prerequisite for making or entering into this contract imposed by Executive Order 12969, August 8, 1995.

(b) By signing this offer, the offeror certifies that-

(1) As the owner or operator of a facilities that will be used in the performance of this contract that are subject to the filing and reporting requirements described in section 313 of the Emergency Planning and Community Right-to-Know Act of 1986 (EPCRA) (42 U.S.C. 11023) and section 6607 of the Pollution Prevention Act of 1990 (PPA) (42 U.S.C. 13106), the offeror will file and continue to file, for such facilities for the life of the contract the Toxic Chemical Release Inventory Form (Form R) as described in sections 313(a) and (g) of the EPCRA and section 6607 of PPA; or

(2) None of its owned or operated facilities to be used in the performance of this contract is subject the Form R filing and reporting requirements because each facility is exempt for at least one of the following reasons: (Check each block that is applicable.)

[ ] (i) The facility does not manufacture, process or otherwise use any toxic chemicals listed under section 313(c) of EPCRA, 42 U.S.C. 11023(c);

[ ] (ii) The facility does not have 10 or more full-time employees as specified in section 313(b)(1)(A) of EPCRA, 42 U.S.C. 11023(b)(1)(A);

[ ] (iii) The facility does not meet the reporting thresholds of toxic chemicals established under section 313(f) of EPCRA, 42 U.S.C. 11023(f) (including the alternate thresholds at 40 CFR 372.27, provided an appropriate certification form has been filed with EPA);

[ ] (iv) The facility does not fall within Standard Industrial Classification Code (SIC) major groups 20 through 39 or their corresponding North American Industry Classification System (NAICS) sectors 31 through 33; or

[ ] (v) The facility is not located within any State of the United States, the District of Columbia, the Commonwealth of Puerto Rica, Guam, American Samoa, the United States Virgin Islands, the Norther Mariana Islands, or any other territory or possession over which the United States has jurisdiction.

20. (DFARS 252.225-7031) SECONDARY ARAB BOYCOTT OF ISRAEL (JUN 1992)

(a) Definitions. As used in this clause--

(1) "Foreign person" means any person other than a United States person as defined in Section 16(2) of the Export Administration Act of 1979 (50 U.S.C. App. Sec 2415).

(2) "United States person" is defined in Section 16(2) of the Export Administration Act of 1979 and means any United States resident or national (other than an individual resident outside the United States and employed by other than a United States person), any domestic concern (including any permanent domestic establishment of any foreign concern), and any foreign subsidiary or affiliate (including any foreign establishment) of any domestic concern which is controlled in fact by such domestic concern, as determined under regulations of the President.

(b) Certification.

By submitting this offer, the Offeror, if a foreign person, company, company or entity, certifies that it--

(1) Does not comply with the Secondary Arab Boycott of Israel; and

(2) Is not taking or knowingly agreeing to take any action, with respect to the Secondary Boycott of Israel by Arab countries, which 50 U.S.C. App. Sec 2407(a) prohibits a United States person from taking.

(End of clause)

21. (DFARS 252.247-7022) REPRESENTATION OF EXTENT OF TRANSPORTATION BY SEA (AUG 1992).

(a) The Offeror shall indicate by checking the appropriate blank in paragraph (b) of this provision whether transportation of supplies by sea is anticipated under the resultant contract. The term "supplies" is defined in the Transportation of Supplies by Sea clause of this solicitation.

(b) REPRESENTATION. The Offeror represents that it-

_____ Does anticipate that supplies will be transported by sea in the performance of any contract or subcontract resulting from this solicitation.

_____ Does not anticipate that supplies will be transported by sea in the performance of any contract or subcontract resulting from this solicitation.

(c) Any contract resulting from this solicitation will include the Transportation of Supplies by Sea Clause. If the Offeror represents that it will not use ocean transportation, the resulting contract will also include the Defense FAR Supplement clause at 252.247-7024, Notification of Transportation of Supplies by Sea.

SECTION 00700

CONTRACT CLAUSES

INDEX

* - CONTRACT CLAUSES THAT MAY BE INCORPORATED BY REFERENCE

1. FAR 52.252-2 CLAUSES INCORPORATED BY REFERENCE (FEB 1998)
2. DFARS 252.201-7000 CONTRACTING OFFICER'S REPRESENTATIVE (DEC 1991)
3. *FAR 52.202-1 DEFINITIONS (DEC 2001) ALTERNATE I (MAR 2001)
4. *FAR 52.203-3 GRATUITIES (APR 1984)
5. *FAR 52.203-5 COVENANT AGAINST CONTINGENT FEES (APR 1984)
6. *FAR 52.203-7 ANTI-KICKBACK PROCEDURES (JUL 1995)
7. *FAR 52.203-8 CANCELLATION, RESCISSION, AND RECOVERY OF FUNDS FOR ILLEGAL OR IMPROPER ACTIVITY (JAN 1997)
8. DFARS 252.203-7001 PROHIBITION ON PERSONS CONVICTED OF FRAUD OR OTHER DEFENSE—CONTRACT-RELATED FELONIES (MARCH 1999)
9. DFARS 252.203-7002 DISPLAY OF DOD HOTLINE POSTER (DEC 1991) (For Military Contracts Exceeding $5,000,000)
10. *FAR 52.203-10 PRICE OR FEE ADJUSTMENT FOR ILLEGAL OR IMPROPER ACTIVITY (JAN 1997)
11. *FAR 52.203-12 LIMITATION ON PAYMENTS TO INFLUENCE CERTAIN FEDERAL TRANSACTIONS (JUN 1997)
12. *FAR 52.204-4 PRINTED OR COPIED DOUBLE-SIDED ON RECYCLED PAPER (AUG 2000)
13. DFARS 252.204-7003 CONTROL OF GOVERNMENT PERSONNEL WORK PRODUCT (APR 1992)
14. *FAR 52.209-6 PROTECTING THE GOVERNMENTS INTEREST WHEN SUBCONTRACTING WITH CONTRACTORS DEBARRED, SUSPENDED, OR PROPOSED FOR DEBARMENT (JUL 1995)
15. DFARS 252.209-7004 SUBCONTRACTING WITH FIRMS THAT ARE OWNED OR CONTROLLED BY THE GOVERNMENT OF A TERRORIST COUNTRY (MAR 1998)
16. *FAR 52.211-15 DEFENSE PRIORITY AND ALLOCATION REQUIREMENTS (SEP 1990) [For Military Contract's Only]
17. FAR 52.211-18 VARIATION IN ESTIMATED QUANTITY (APR 1984)
18. *FAR 52.214-26 AUDIT AND RECORDS--SEALED BIDDING (OCT 1997)
19. *FAR 52.214-27 PRICE REDUCTION FOR DEFECTIVE COST OR PRICING DATA—MODIFICATIONS--SEALED BIDDING (OCT 1997)
20. *FAR 52.214-28 SUBCONTRACTOR COST OR PRICING DATA--MODIFICATIONS—SEALED BIDDING (OCT 1997)
21. *FAR 52.219-4 NOTICE OF PRICE EVALUATION PREFERENCE FOR HUBZONE SMALL BUSINESS CONCERNS (JAN 1999)
22. *FAR 52.219-8 UTILIZATION OF SMALL BUSINESS CONCERNS (OCT 2000)
23. *FAR 52.219-9 SMALL BUSINESS SUBCONTRACTING PLAN (JAN 2002) [When Contracting By Negotiations]
24. *FAR 52.219-9 SMALL BUSINESS SUBCONTRACTING PLAN (JAN 2002) --ALTERNATE I (OCT 2001) [When Contracting By Sealed Bidding]
25. DFARS 252.219-7009 SECTION 8(a) DIRECT AWARD (MAR 2002) [When Competitive 8(a) Contracting Procedures are used]
26. *FAR 52.219-14 LIMITATIONS ON SUBCONTRACTING (DEC 1996) [For Small Business Set Aside Only]
27. *FAR 52.219-16 LIQUIDATED DAMAGES-SUBCONTRACTING PLAN (JAN 1999)

28. DFARS 252.219-7010 ALTERNATE A (JUN 1998) [When Competitive 8(a) Contracting Procedures are used]
29. FAR 52.219-18 NOTIFICATION OF COMPETITION LIMITED TO ELIGIBLE 8(A) CONCERNS (JUNE 1999) [When Competitive 8(a) Contracting Procedures are used]
30. DFARS 252.219-7003 SMALL, SMALL DISADVANTAGED AND WOMEN-OWNED SMALL BUSINESS SUBCONTRACTING PLAN (DOD CONTRACTS) (APR 1996)
31. DFARS 252.219-7004 SMALL, SMALL DISADVANTAGED AND WOMEN-OWNED SMALL BUSINESS SUBCONTRACTING PLAN (TEST PROGRAM) (JUN 1997)
32. *FAR 52.222-3 CONVICT LABOR (AUG 1996)
33. *FAR 52.222-4 CONTRACT WORK HOURS AND SAFETY STANDARDS ACT—OVERTIME COMPENSATION (SEPT 2000)
34. *FAR 52.222-6 DAVIS-BACON ACT (FEB 1995)
35. *FAR 52.222-7 WITHHOLDING OF FUNDS (FEB 1988)
36. *FAR 52.222-8 PAYROLLS AND BASIC RECORDS (FEB 1988)
37. *FAR 52.222-9 APPRENTICES AND TRAINEES (FEB 1988)
38. *FAR 52.222-10 COMPLIANCE WITH COPELAND ACT REQUIREMENTS (FEB 1988)
39. *FAR 52.222-11 SUBCONTRACTS (LABOR STANDARDS) (FEB 1988)
40. *FAR 52.222-12 CONTRACT TERMINATION--DEBARMENT (FEB 1988)
41. *FAR 52.222-13 COMPLIANCE WITH DAVIS-BACON AND RELATED ACT REGULATIONS (FEB 1988)
42. *FAR 52.222-14 DISPUTES CONCERNING LABOR STANDARDS (FEB 1988)
43. *FAR 52.222-15 CERTIFICATION OF ELIGIBILITY (FEB 1988)
44. *FAR 52.222-26 EQUAL OPPORTUNITY (APR 2002)
45. *FAR 52.222-27 AFFIRMATIVE ACTION COMPLIANCE REQUIREMENTS FOR CONSTRUCTION (FEB 1999)
46. *FAR 52.222-35 EQUAL OPPORTUNITY FOR SPECIAL DISABLED VETERANS, VETERANS OF THE VIETNAM ERA, AND OTHER ELIGIBLE VETERANS (DEC 2001)
47. *FAR 52.222-36 AFFIRMATIVE ACTION FOR WORKERS WITH DISABILITIES (JUN 1998)
48. *FAR 52.222-37 EMPLOYMENT REPORTS ON SPECIAL DISABLED VETERANS, VETERANS OF THE VIETNAM ERA, AND OTHER ELIGIBLE VETERANS (DEC 2001)
49. *FAR 52.222-38 COMPLIANCE WITH VETERANS' EMPLOYMENT REPORTING REQUIREMENTS (DEC 2001)
50. *FAR 52.223-5 POLLUTION PREVENTION AND RIGHT-TO-KNOW INFORMATION (APR 1998) [For Work on Federal Facilities]
51. *FAR 52.223-6 DRUG-FREE WORKPLACE (MAY 2001)
52. FAR 52.223-9 ESTIMATE OF PERCENTAGE OF RECOVERED MATERIAL CONTENT FOR EPA-DESIGNATED PRODUCTS (AUG 2000) [For Contracts exceeding $100,000. EPA Designated product (available at http://www.epa.gov/cpg/)]
53. *FAR 52.223-14 TOXIC CHEMICAL RELEASE REPORTING (OCT 2000) [For Contracts Over $100,000]
54. RESERVED
55. DFARS 252.223-7006 PROHIBITION ON STORAGE AND DISPOSAL OF TOXIC AND HAZARDOUS MATERIALS (APR 1993)
56. *FAR 52.225-9 BUY AMERICAN ACT—CONSTRUCTION MATERIALS (MAY 2002) (For Contracts less than $6.806 million)
57. *FAR 52.225-10 NOTICE OF BUY AMERICAN ACT REQUIREMENT—CONSTRUCTION MATERIALS (MAY 2002) (Applicable with FAR 52.225-9)
58. *FAR 52.225-11 BUY AMERICAN ACT—CONSTRUCTION MATERIALS UNDER TRADE AGREEMENTS (MAY 2002) [For Contracts more than $6,806,000] ALTERNATE I (MAY 2002) [For Contracts between $6.806 and 7.068419 Million]
59. *FAR 52.225-12 NOTICE OF BUY AMERICAN ACT REQUIREMENT—CONSTRUCTION MATERIALS UNDER TRADE AGREEMENTS (MAY 2002) [Applicable with FAR 52.225-11] ALTERNATE II (MAY 2002) [For Contracts Between 6.806 and 7.068419 Million]
60. *FAR 52.225-13 RESTRICTIONS ON CERTAIN FOREIGN PURCHASES (JULY 2000)

61. *FAR 52.226-1 UTILIZATION OF INDIAN ORGANIZATIONS AND INDIAN-OWNED ECONOMIC ENTERPRISES (JUNE 2000)
62. *FAR 52.227-1 AUTHORIZATION AND CONSENT (JUL 1995)
63. *FAR 52.227-2 NOTICE AND ASSISTANCE REGARDING PATENT AND COPYRIGHT INFRINGEMENT (AUG 1996)
64. *FAR 52.227-4 PATENT INDEMNITY--CONSTRUCTION CONTRACTS (APR 1984)
65. DFARS 252.227-7033 RIGHTS IN SHOP DRAWINGS (APR 1966)
66. FAR 52.228-1 BID GUARANTEE (SEP 1996) [NOTE: Not required for projects less than $100,000]
67. *FAR 52.228-2 ADDITIONAL BOND SECURITY (OCT 1997)
68. *FAR 52.228-5 INSURANCE--WORK ON A GOVERNMENT INSTALLATION (JAN 1997) [For
68. Contracts Exceeding $100,000]
69. *FAR 52.228-11 PLEDGES OF ASSETS (FEB 1992)
70. *FAR 52.228-12 PROSPECTIVE SUBCONTRACTOR REQUESTS FOR BONDS (OCT 1995)
71. FAR 52.228-13 ALTERNATIVE PAYMENT PROTECTIONS (JULY 2000) [Applicable only for projects or delivery orders less than $100,000]
72. FAR 52.228-14 IRREVOCABLE LETTER OF CREDIT (DEC 1999)
73. FAR 52.228-15 PERFORMANCE AND PAYMENT BONDS (JULY 2000).
74. FAR 52.229-3 FEDERAL, STATE, AND LOCAL TAXES (JAN 1991) [For Contracts Exceeding $100,000]
75. *FAR 52.229-5 TAXES--CONTRACTS PERFORMED IN U.S. POSSESSIONS OR PUERTO RICO (APR 1984)
76. DFARS 252.231-7000 SUPPLEMENTAL COST PRINCIPLES (DEC 1991)
77. *FAR 52.232-5 PAYMENTS UNDER FIXED-PRICE CONSTRUCTION CONTRACTS (MAY 1997)
78. RESERVED.
79. *FAR 52.232-17 INTEREST (JUN 1996)
80. *FAR 52.232-23 ASSIGNMENT OF CLAIMS (JAN 1986)
81. *FAR 52.232-27 PROMPT PAY FOR CONSTRUCTION CONTRACTS (FEB 2002)
82. *FAR 52.232-33 PAYMENT BY ELECTRONIC FUNDS TRANSFER –CENTRAL CONTRACTOR REGISTRATION (MAY 1999)
83. DFARS 252.232-7004 DOD PROGRESS PAYMENT RATES (OCT 2001)
84. DFARS 252.232-7005 REIMBURSEMENT OF SUBCONTRACTOR ADVANCE PAYMENTS--DOD PILOT MENTOR-PROTEGE PROGRAM (SEP 2001)
85. *FAR 52.233-1 DISPUTES (DEC 1998)
86. *FAR 52.233-3 PROTEST AFTER AWARD (AUG 1996)
87. RESERVED
88. FAR 52.236-2 DIFFERING SITE CONDITIONS (APR 1984)
89. *FAR 52.236-3 SITE INVESTIGATION AND CONDITIONS AFFECTING THE WORK (APR
89. 1984)
90. *FAR 52.236-5 MATERIAL AND WORKMANSHIP (APR 1984)
91. *FAR 52.232-33 PAYMENT BY ELECTRONIC FUNDS TRANSFER –CENTRAL CONTRACTOR REGISTRATION (MAY 1999)
92. *FAR 52.236-6 SUPERINTENDENCE BY THE CONTRACTOR (APR 1984)
93. FAR 52.236-7 PERMITS AND RESPONSIBILITIES (NOV 1991)
94. *FAR 52.236-8 OTHER CONTRACTS (APR 1984)
95. *FAR 52.236-9 PROTECTION OF EXISTING VEGETATION, STRUCTURES, EQUIPMENT, UTILITIES, AND IMPROVEMENTS (APR 1984)
96. *FAR 52.236-10 OPERATIONS AND STORAGE AREAS (APR 1984)
97. *FAR 52.236-11 USE AND POSSESSION PRIOR TO COMPLETION (APR 1984)
98. *FAR 52.236-12 CLEANING UP (APR 1984)
99. *FAR 52.236-13 ACCIDENT PREVENTION-ALTERNATE I (NOV 1991)
100. *FAR 52.236-14 AVAILABILITY AND USE OF UTILITY SERVICES (APR 1984)
101. FAR 52.236-15 SCHEDULES FOR CONSTRUCTION CONTRACTS (APR 1984)
102. *FAR 52.236-17 LAYOUT OF WORK (APR 1984)
103. FAR 52.236-21 SPECIFICATIONS AND DRAWINGS FOR CONSTRUCTION (FEB 1997)
104. *FAR 52.236-26 PRECONSTRUCTION CONFERENCE (FEB 1995)

105. DFARS 252.236-7000 MODIFICATION OF PROPOSALS - PRICE BREAKDOWN (DEC 1991)
106. DFARS 252.236-7008 CONTRACT PRICES - BIDDING SCHEDULES (DEC 1991)
107. *FAR 52.242-13 BANKRUPTCY (JUL 1995)
108. *FAR 52.242-14 SUSPENSION OF WORK (APR 1984)
109. FAR 52.243-4 CHANGES (AUG 1987)
110. DFARS 252.243-7001 PRICING OF CONTRACT MODIFICATIONS (DEC 1991)
111. DFARS 252.243-7002 REQUESTS FOR EQUITABLE ADJUSTMENT (MAR 1998)
112. *FAR 52.244-2 SUBCONTRACTS (AUG 1998)
113. FAR 52.244-6 SUBCONTRACTS FOR COMMERCIAL ITEMS (MAY 2001)
114. *FAR 52.245-2 GOVERNMENT PROPERTY (FIXED-PRICE CONTRACTS) (DEC 1989) [For Government Property over $100,000]
115. *FAR 52.245-4 GOVERNMENT-FURNISHED PROPERTY (SHORT FORM) (APR 1984) [For Government Property $100,000 or Less]
116. *FAR 52.246-12 INSPECTION OF CONSTRUCTION (AUG 1996)
117. *FAR 52.246-21 WARRANTY OF CONSTRUCTION (MAR 1994)
118. DFARS 252.247-7023 TRANSPORTATION OF SUPPLIES BY SEA (MAR 2000)
119. DFARS 252.247-7024 NOTIFICATION OF TRANSPORTATION OF SUPPLIES BY SEA (MAR 2000)
120. FAR 52.248-3 VALUE ENGINEERING--CONSTRUCTION (FEB 2000) (ALERNATE I (APR 1984)
121. *FAR 52.249-1 TERMINATION FOR CONVENIENCE OF THE GOVERNMENT (FIXED-PRICE) (SHORT FORM) (APR 1984) [For Contracts $100,000 or Less]
122. *FAR 52.249-2 TERMINATION FOR CONVENIENCE OF THE GOVERNMENT (FIXED-PRICE) ALTERNATE I (SEP 1996) [For Contracts Over $100,000]
123. *FAR 52.249-10 DEFAULT (FIXED-PRICE CONSTRUCTION) (APR 1984)
124. ENVIRONMENTAL LITIGATION (1974 NOV OCE)
125. EFARS 52.249-5000 BASIS FOR SETTLEMENT OF PROPOSALS
126. INAPPLICABLE PROVISIONS AND CLAUSES (Local Provision). [Applicable only for projects or delivery orders less than $100,000]

SECTION 00700

CONTRACT CLAUSES

1. FAR 52.252-2 CLAUSES INCORPORATED BY REFERENCE (FEB 1998)

This contract incorporates one or more clauses by reference, with the same force and effect as if they were given in full text. Upon request, the Contracting Officer will make their full text available. Also, the full text of a clause may be accessed electronically at this/these address(es):

http://www.arnet.gov/far

(End of clause)

* - CONTRACT CLAUSES THAT MAY BE INCORPORATED BY REFERENCE

2. DFARS 252.201-7000 CONTRACTING OFFICER'S REPRESENTATIVE (DEC 1991)

(a) Definition.

"Contracting officer's representative" means an individual designated in accordance with subsection 201.602-2 of the Defense Federal Acquisition Regulation Supplement and authorized in writing by the contracting officer to perform specific technical or administrative functions.

(b) If the Contracting Officer designates a contracting officer's representative (COR), the Contractor will receive a copy of the written designation. It will specify the extent of the COR's authority to act on behalf of the contracting officer. The COR is not authorized to make any commitments or changes that will affect price, quality, quantity, delivery, or any other term or condition of the contract.

(End of clause)

3. *FAR 52.202-1 DEFINITIONS (DEC 2001) ALTERNATE I (MAR 2001)

a) "Agency head" or "head of the agency" means the Secretary (Attorney General, Administrator, Governor, Chairperson, or other chief official, as appropriate) of the agency, unless otherwise indicated, including any deputy or assistant chief official of the executive agency.

(b) "Commercial component" means any component that is a commercial item.

(c) "Commercial item" means—

(1) Any item, other than real property, that is of a type customarily used by the general public or by non-governmental entities for purposes other than governmental purposes, and that—

(i) Has been sold, leased, or licensed to the general public; or

(ii) Has been offered for sale, lease, or license to the general public;

(2) Any item that evolved from an item described in paragraph (c)(1) of this clause through advances in technology or performance and that is not yet available in the commercial marketplace, but will be available in the commercial marketplace in time to satisfy the delivery requirements under a Government solicitation;

(3) Any item that would satisfy a criterion expressed in paragraphs (c)(1) or (c)(2) of this clause, but for—

(i) Modifications of a type customarily available in the commercial marketplace; or

(ii) Minor modifications of a type not customarily available in the commercial marketplace made to meet Federal Government requirements. "Minor" modifications means modifications that do not significantly alter the nongovernmental function or essential physical characteristics of an item or component, or

change the purpose of a process. Factors to be considered in determining whether a modification is minor include the value and size of the modification and the comparative value and size of the final product. Dollar values and percentages may be used as guideposts, but are not conclusive evidence that a modification is minor;

(4) Any combination of items meeting the requirements of paragraphs (c)(1), (2), (3), or (5) of this clause that are of a type customarily combined and sold in combination to the general public;

(5) Installation services, maintenance services, repair services, training services, and other services if—

(i) Such services are procured for support of an item referred to in paragraph (c)(1), (2), (3), or (4) of this definition, regardless of whether such services are provided by the same source or at the same time as the item; and

(ii) The source of such services provides similar services contemporaneously to the general public under terms and conditions similar to those offered to the Federal Government

(6) Services of a type offered and sold competitively in substantial quantities in the commercial marketplace based on established catalog or market prices for specific tasks performed under standard commercial terms and conditions. This does not include services that are sold based on hourly rates without an established catalog or market price for a specific service performed. For purposes of these services—

(i) "Catalog price" means a price included in a catalog, price list, schedule, or other form that is regularly maintained by the manufacturer or vendor, is either published or otherwise available for inspection by customers, and states prices at which sales are currently, or were last, made to a significant number of buyers constituting the general public; and

(ii) "Market prices" means current prices that are established in the course of ordinary trade between buyers and sellers free to bargain and that can be substantiated through competition or from sources independent of the offerors.

(7) Any item, combination of items, or service referred to in paragraphs (c)(1) through (c)(6), notwithstanding the fact that the item, combination of items, or service is transferred between or among separate divisions, subsidiaries, or affiliates of a Contractor; or

(8) A nondevelopmental item, if the procuring agency determines the item was developed exclusively at private expense and sold in substantial quantities, on a competitive basis, to multiple State and local Governments.

(d) "Component" means any item supplied to the Government as part of an end item or of another component, except that for use in 52.225-9, and 52.225-11 see the definitions in 52.225-9(a) and 52.225-11(a).

(e) "Contracting Officer" means a person with the authority to enter into, administer, and/or terminate contracts and make related determinations and findings. The term includes certain authorized representatives of the Contracting Officer acting within the limits of their authority as delegated by the Contracting Officer.

(f) "Nondevelopmental item" means—

(1) Any previously developed item of supply used exclusively for governmental purposes by a Federal agency, a State or local government, or a foreign government with which the United States has a mutual defense cooperation agreement;

(2) Any item described in paragraph (f)(1) of this definition that requires only minor modification or modifications of a type customarily available in the commercial marketplace in order to meet the requirements of the procuring department or agency; or

(3) Any item of supply being produced that does not meet the requirements of paragraph (f)(1) or (f)(2) solely because the item is not yet in use.

(End of clause)

4. *FAR 52.203-3 GRATUITIES (APR 1984)

(a) The right of the Contractor to proceed may be terminated by written notice if, after notice and hearing, the agency head or a designee determines that the Contractor, its agent, or another representative--

(1) Offered or gave a gratuity (e.g., an entertainment or gift) to an officer, official, or employee of the Government; and

(2) Intended, by the gratuity, to obtain a contract or favorable treatment under a contract.

(b) The facts supporting this determination may be reviewed by any court having lawful jurisdiction.

(c) If this contract is terminated under paragraph (a) above, the Government is entitled--

(1) To pursue the same remedies as in a breach of the contract; and

(2) In addition to any other damages provided by law, to exemplary damages of not less than 3 nor more than 10 times the cost incurred by the Contractor in giving gratuities to the person concerned, as determined by the agency head or a designee. (This subparagraph (c)(2) is applicable only if this contract uses money appropriated to the Department of Defense.)

(d) The rights and remedies of the Government provided in this clause shall not be exclusive and are in addition to any other rights and remedies provided by law or under this contract.

5. *FAR 52.203-5 COVENANT AGAINST CONTINGENT FEES (APR 1984)

(a) The Contractor warrants that no person or agency has been employed or retained to solicit or obtain this contract upon an agreement or understanding for a contingent fee, except a bona fide employee or agency. For breach or violation of this warranty, the Government shall have the right to annul this contract without liability or, in its discretion, to deduct from the contract price or consideration, or otherwise recover, the full amount of the contingent fee.

(b) "Bona fide agency," as used in this clause, means an established commercial or selling agency, maintained by a contractor for the purpose of securing business, that neither exerts nor proposes to exert improper influence to solicit or obtain Government contracts nor holds itself out as being able to obtain any Government contract or contracts through improper influence.

"Bona fide employee," as used in this clause, means a person, employed by a contractor and subject to the contractor's supervision and control as to time, place, and manner of performance, who neither exerts nor proposes to exert improper influence to solicit or obtain Government contracts nor holds out as being able to obtain any Government contract or contracts through improper influence.

"Contingent fee," as used in this clause, means any commission, percentage, brokerage, or other fee that is contingent upon the success that a person or concern has in securing a Government contract.

"Improper influence," as used in this clause, means any influence that induces or tends to induce a Government employee or officer to give consideration or to act regarding a Government contract on any basis other than the merits of the matter.

6. *FAR 52.203-7 ANTI-KICKBACK PROCEDURES (JUL 1995)

(a) Definitions.

"Kickback," as used in this clause, means any money, fee, commission, credit, gift, gratuity, thing of value, or compensation of any kind which is provided, directly or indirectly, to any prime Contractor, prime Contractor employee, subcontractor, or subcontractor employee for the purpose of improperly obtaining or rewarding favorable treatment in connection with a prime contract or in connection with a subcontract relating to a prime contract. "Person," as used in this clause, means a corporation, partnership, business association of any kind, trust, joint-stock company, or individual.

"Prime contract," as used in this clause, means a contract or contractual action entered into by the United States for the purpose of obtaining supplies, materials, equipment, or services of any kind.

"Prime Contractor," as used in this clause, means a person who has entered into a prime contract with the United States.

"Prime Contractor employee," as used in this clause, means any officer, partner, employee, or agent of a prime Contractor.

"Subcontract," as used in this clause, means a contract or contractual action entered into by a prime Contractor or subcontractor for the purpose of obtaining supplies, materials, equipment, or services of any kind under a prime contract.

"Subcontractor," as used in this clause, (1) means any person, other than the prime Contractor, who offers to furnish or furnishes any supplies, materials, equipment, or services of any kind under a prime contract or a

subcontract entered into in connection with such prime contract, and (2) includes any person who offers to furnish or furnishes general supplies to the prime Contractor or a higher tier subcontractor.

"Subcontractor employee," as used in this clause, means any officer, partner, employee, or agent of a subcontractor.

(b) The Anti-Kickback Act of 1986 (41 U.S.C. 51-58) (the Act), prohibits any person from--

(1) Providing or attempting to provide or offering to provide any kickback;

(2) Soliciting, accepting, or attempting to accept any kickback; or

(3) Including, directly or indirectly, the amount of any kickback in the contract price charged by a prime Contractor to the United States or in the contract price charged by a subcontractor to a prime Contractor or higher tier subcontractor.

(c) (1) The Contractor shall have in place and follow reasonable procedures designed to prevent and detect possible violations described in paragraph (b) of this clause in its own operations and direct business relationships.

(2) When the Contractor has reasonable grounds to believe that a violation described in paragraph (b) of this clause may have occurred, the Contractor shall promptly report in writing the possible violation. Such reports shall be made to the inspector general of the contracting agency, the head of the contracting agency if the agency does not have an inspector general, or the Department of Justice.

(3) The Contractor shall cooperate fully with any Federal agency investigating a possible violation described in paragraph (b) of this clause.

(4) The Contracting Officer may

(i) offset the amount of the kickback against any monies owed by the United States under the prime contract and/or

(ii) direct that the Prime Contractor withhold from sums owed a subcontractor under the prime contract the amount of the kickback. The Contracting Officer may order that monies withheld under subdivision (c)(4)(ii) of this clause be paid over to the Government unless the Government has already offset those monies under subdivision (c)(4)(i) of this clause. In either case, the Prime Contractor shall notify the Contracting Officer when the monies are withheld.

(5) The Contractor agrees to incorporate the substance of this clause, including subparagraph (c)(5) but excepting subparagraph (c)(1), in all subcontracts under this contract which exceed $100,000.

7. *FAR 52.203-8 CANCELLATION, RESCISSION, AND RECOVERY OF FUNDS FOR ILLEGAL OR IMPROPER ACTIVITY (JAN 1997)

(a) If the Government receives information that a contractor or a person has engaged in conduct constituting a violation of subsection (a), (b), (c), or (d) of Section 27 of the Office of Federal Procurement Policy Act (41 U.S.C. 423) (the Act), as amended by section 4304 of the National Defense Authorization Act for Fiscal Year 1996 (Pub. L. 104-106), the Government may--

(1) Cancel the solicitation, if the contract has not yet been awarded or issued; or

(2) Rescind the contract with respect to which--

(i) The Contractor or someone acting for the Contractor has been convicted for an offense where the conduct constitutes a violation of subsection 27 (a) or (b) of the Act for the purpose of either--

(A) Exchanging the information covered by such subsections for anything of value; or

(B) Obtaining or giving anyone a competitive advantage in the award of a Federal agency procurement contract; or

(ii) The head of the contracting activity has determined, based upon a preponderance of the evidence, that the Contractor or someone acting for the Contractor has engaged in conduct constituting an offense punishable under subsection 27(e)(1) of the Act.

(b) If the Government rescinds the contract under paragraph (a) of this clause, the Government is entitled to recover, in addition to any penalty prescribed by law, the amount expended under the contract.

(c) The rights and remedies of the Government specified herein are not exclusive, and are in addition to any other rights and remedies provided by law, regulation, or under this contract.

8. DFARS 252.203-7001 PROHIBITION ON PERSONS CONVICTED OF FRAUD OR OTHER DEFENSE—CONTRACT-RELATED FELONIES (MARCH 1999)

(a) Definitions.

As used in this clause--

(1) "Arising out of a contract with the "DoD" means any any act in connection with--

(i) Attempting to obtain;

(ii) Obtaining; or

(iii) Performing a contract or first-tier subcontract of any department, or component of the Department of Defense (DoD).

(2) "Conviction of fraud or any other felony," means any conviction for fraud or a felony in violation of state or Federal criminal statutes, whether entered on a verdict or plea, including a plea of nolo contendere, for which sentence has been imposed.

(3) "Date of conviction," means the date judgement was entered against the individual.

(b) Any individual who is convicted after September 29, 1988 of fraud or any other felony arising out of a contract with the DoD is prohibited from serving--

(1) In a management or supervisory capacity on any DoD contract or first-tier subcontract;

(2) On board of directors of any DoD Contractor or first-tier subcontractor;

(3) As a consultant to any DoD Contractor or first-tier subcontractor; or

(4) In any other capacity with the authority to influence, advise, or control the decisions of any DoD contractor or subcontractor with regard to any DoD contract or first-tier subcontract.

(c) Unless waived, the prohibition in paragraph (b) of this clause applies for not less than five years from the date of conviction.

(d) 10 U.S.C. 2408 provides that a defense Contractor or first-tier subcontractor shall be subject to a criminal penalty of not more than $500,000 if convicted of knowingly--

(1) Employing a person under a prohibition in paragraph (b) of this clause;

(2) Allowing such a person to serve on the board of directors of Contractor or first-tier subcontractor.

(e) In addition to the criminal penalties contained in 10 U.S.C. 2408, the Government may consider other available remedies, such as--

(1) Suspension or debarment;

(2) Cancellation of the contract at no cost to the Government; or

(3) Termination of the contract for default.

(f) The Contractor may submit written requests for waiver of the prohibition in paragraph (b) of this clause to the Contracting Officer. Requests shall clearly identify--

(1) The person involved;

(2) The nature of the conviction and resultant sentence or punishment imposed;

(3) The reasons for the requested waiver; and

(4) An explanation of why a waiver is in the interest of national security.

(g) The Contractor agrees to include the substance of this clause appropriately modified to reflect the identity and relationship of the parties, in all first-tier subcontracts exceeding the simplified acquisition threshold in Part 2 of the Federal Acquisition Regulation, except those for commercial items or components.

(h) Pursuant to 10 U.S.C.2408(c), defense contractors and subcontractors may obtain information as to whether a particular has been convicted of fraud or any other felony arising out of a contract with the DoD by contracting The Office of Justice Programs, The Denial of Federal Benefits Office, U.S. Department of Justice, telephone (202) 616-3507.

9. DFARS 252.203-7002 DISPLAY OF DOD HOTLINE POSTER (DEC 1991) (<u>For Military Contracts Exceeding $5,000,000</u>)

(a) The Contractor shall display prominently in common work areas within business segments performing work under Department of Defense (DoD) contracts, DoD Hotline Posters prepared by DoD Office of the Inspector General.

(b) DoD Hotline Posters may be obtained from the DoD Inspector General, ATTN: Defense Hotline, 400 Army Navy Drive, Washington DC 22202-2884.

(c) The Contract need not comply with paragraph (a) of this clause if it has established a mechanism, such as a hotline, by which employees may report suspected instances of improper conduct, and instructions that encourage employees to make such reports.

10. *FAR 52.203-10 PRICE OR FEE ADJUSTMENT FOR ILLEGAL OR IMPROPER ACTIVITY (JAN 1997)

(a) The Government, at its election, may reduce the price of a fixed-price type contract and the total cost and fee under a cost-type contract of profit or fee determined as set forth in paragraph (b) of this clause if the head of the contracting activity or designee determines that there was a violation of subsection 27(a), (b), or (c) of the Office of Federal Procurement Policy Act, as amended (41 U.S.C. 423), as implemented in section 3.104 of the Federal Acquisition Regulation.

(b) The price or fee reduction referred to in paragraph (a) of this clause shall be--

(1) For cost-plus-fixed-fee contracts, the amount of the fee specified in the contract at the time of award;

(2) For cost-plus-incentive-fee contracts, the target fee specified in the contract at the time of award, notwithstanding any minimum fee or "fee floor" specified in the contract;

(3) For cost-plus-award-fee contracts--

(i) The base fee established in the contract at the time of contract award;

(ii) If no base fee is specified in the contract, 30 percent of the amount of each award fee otherwise payable to the Contractor for each award fee evaluation period or at each award fee determination point.

(4) For fixed-price-incentive contracts, the Government may--

(i) Reduce the contract target price and contract target profit both by an amount equal to the initial target profit specified in the contract at the time of contract award; or

(ii) If an immediate adjustment to the contract target price and contract target profit would have a significant adverse impact on the incentive price revision relationship under the contract, or adversely affect the contract financing provisions, the Contracting Officer may defer such adjustment until establishment of the total final price of the contract. The total final price established in accordance with the incentive price revision provisions of the contract shall be reduced by an amount equal to the initial target profit specified in the contract at the time of contract award and such reduced price shall be the total final contract price.

(5) For firm-fixed-price contracts, by 10 percent of the initial contract price or a profit amount determined by the Contracting Officer from records or documents in existence prior to the date of the contract award.

(c) The Government may, at its election, reduce a prime contractor's price or fee in accordance with the procedures of paragraph (b) of this clause for violations of the Act by its subcontractors by an amount not to exceed the amount of profit or fee reflected in the subcontract at the time the subcontract was first definitively priced.

(d) In addition to the remedies in paragraphs (a) and (c) of this clause, the Government may terminate this contract for default. The rights and remedies of the Government specified herein are not exclusive, and are in addition to any other rights and remedies provided by law or under this contract.

11. *FAR 52.203-12 LIMITATION ON PAYMENTS TO INFLUENCE CERTAIN FEDERAL TRANSACTIONS (JUN 1997)

(a) Definitions.

"Agency," as used in this clause, means executive agency as defined in 2.101.

"Covered Federal Action," as used in this clause, means any of the following Federal actions:

(1) The awarding of any Federal contract.

(2) The making of any Federal grant.

(3) The making of any Federal loan.

(4) The entering into of any cooperative agreement.

(5) The extension, continuation, renewal, amendment, or modification of any Federal contract, grant, loan, or cooperative agreement.

"Indian tribe" and "tribal organization," as used in this clause, have the meaning provided in section 4 of the Indian Self-Determination and Education Assistance Act (25 U.S.C. 450B) and include Alaskan Natives.

"Influencing or attempting to influence," as used in this clause, means making, with the intent to influence, any communication to or appearance before an officer or employee of any agency, a Member of Congress, an officer or employee of Congress, or an employee of a Member of Congress in connection with any covered Federal action.

"Local government," as used in this clause, means a unit of government in a State and, if chartered, established, or otherwise recognized by a State for the performance of a governmental duty, including a local public authority, a special district, an intrastate district, a council of governments, a sponsor group representative organization, and any other instrumentality of a local government.

"Officer or employee of an agency," as used in this clause, includes the following individuals who are employed by an agency:

(1) An individual who is appointed to a position in the Government under title 5, United States Code, including a position under a temporary appointment.

(2) A member of the uniformed services, as defined in subsection 101(3), title 37, United States Code.

(3) A special Government employee, as defined in section 202, title 18, United States Code.

(4) An individual who is a member of a Federal advisory committee, as defined by the Federal Advisory Committee Act, title 5, United States Code, appendix 2.

"Person," as used in this clause, means an individual, corporation, company, association, authority, firm, partnership, society, State and local government, regardless of whether such entity is operated for profit, or not for profit. This term excludes an Indian tribe, tribal organization, or any other Indian organization with respect to expenditures specifically permitted by other Federal law.

"Reasonable compensation," as used in this clause, means, with respect to a regularly employed officer or employee of any person, compensation that is consistent with the normal compensation for such officer or employee for work that is not furnished to, not funded by, or not furnished in cooperation with the Federal Government.

"Reasonable payment," as used in this clause, means, with respect to professional and other technical services, a payment in an amount that is consistent with the amount normally paid for such services in the private sector.

"Recipient," as used in this clause, includes the Contractor and all subcontractors. This term excludes an Indian tribe, tribal organization, or any other Indian organization with respect to expenditures specifically permitted by other Federal law.

"Regularly employed," as used in this clause, means, with respect to an officer or employee of a person requesting or receiving a Federal contract, an officer or employee who is employed by such person for at least 130 working days within 1 year immediately preceding the date of the submission that initiates agency consideration of such person for receipt of such contract. An officer or employee who is employed by such person for less than 130 working days within 1 year immediately preceding the date of the submission that initiates agency consideration of such person shall be considered to be regularly employed as soon as he or she is employed by such person for 130 working days.

"State," as used in this clause, means a State of the United States, the District of Columbia, the Commonwealth of Puerto Rico, a territory or possession of the United States, an agency or instrumentality of a State, and multi-State, regional, or interstate entity having governmental duties and powers.

(b) Prohibitions.

(1) Section 1352 of title 31, United States Code, among other things, prohibits a recipient of a Federal Contract, grant, loan, or cooperative agreement from using appropriated funds to pay any person for influencing or attempting to influence an officer or employee of any agency, a Member of Congress, an officer or employee of Congress, or an employee of a Member of Congress in connection with any of the following covered Federal actions: The awarding of any Federal contract; the making of any Federal grant; the making of any Federal loan; the entering into of any cooperative agreement; or the modification of any Federal contract, grant, loan, or cooperative agreement.

(2) The Act also requires Contractors to furnish a disclosure if any funds other than Federal appropriated funds (including profit or fee received under a covered Federal transaction) have been paid, or will be paid, to any person for influencing or attempting to influence an officer or employee of any agency, a Member of Congress, an officer or employee of Congress, or an employee of a Member of Congress in connection with a Federal contract, grant, loan, or cooperative agreement.

(3) The prohibitions of the Act do not apply under the following conditions:

(i) Agency and legislative liaison by own employees.

(A) The prohibition on the use of appropriated funds, in subparagraph (b)(1) of this clause, does not apply in the case of a payment of reasonable compensation made to an officer or employee of a person requesting or receiving a covered Federal action if the payment is for agency and legislative liaison activities not directly related to a covered Federal action.

(B) For purposes of subdivision (b)(3)(i)(A) of this clause, providing any information specifically requested by an agency or Congress is permitted at any time.

(C) The following agency and legislative liaison activities are permitted at any time where they are not related to a specific solicitation for any covered Federal action:

(1) Discussing with an agency the qualities and characteristics (including individual demonstrations) of the person's products or services, conditions or terms of sale, and service capabilities.

(2) Technical discussions and other activities regarding the application or adaptation of the person's products or services for an agency's use.

(D) The following agency and legislative liaison activities are permitted where they are prior to formal solicitation of any covered Federal action--

(1) Providing any information not specifically requested but necessary for an agency to make an informed decision about initiation of a covered Federal action;

(2) Technical discussions regarding the preparation of an unsolicited proposal prior to its official submission; and

(3) Capability presentations by persons seeking awards from an agency pursuant to the provisions of the Small Business Act, as amended by Pub. L. 95-507, and subsequent amendments.

(E) Only those services expressly authorized by subdivision (b)(3)(i)(A) of this clause are permitted under this clause.

(ii) Professional and technical services.

(A) The prohibition on the use of appropriated funds, in subparagraph (b)(1) of this clause, does not apply in the case of--

(1) A payment of reasonable compensation made to an officer or employee f a person requesting or receiving a covered Federal action or an extension, continuation, renewal, amendment, or modification of a covered Federal action, if payment is for professional or technical services rendered directly in the preparation, submission, or negotiation of any bid, proposal, or application for that Federal action or for meeting requirements imposed by or pursuant to law as a condition for receiving that Federal action.

(2) Any reasonable payment to a person, other than an officer or employee of a person requesting or receiving a covered Federal action or an extension, continuation, renewal, amendment, or modification of a covered Federal action if the payment is for professional or technical services rendered directly in the preparation, submission, or negotiation of any bid, proposal, or application for that Federal action or for meeting requirements imposed by or pursuant to law as a condition for receiving that Federal action. Persons other than officers or employees of a person requesting or receiving a covered Federal action include consultants and trade associations.

(B) For purposes of subdivision (b)(3)(ii)(A) of this clause, "professional and technical services" shall be limited to advice and analysis directly applying any professional or technical discipline. For example, drafting of a legal document accompanying a bid or proposal by a lawyer is allowable. Similarly, technical advice provided by an engineer on the performance or operational capability of a piece of equipment rendered directly in the negotiation of a contract is allowable. However, communications with the intent to influence made by a professional (such as a licensed lawyer) or a technical person (such as a licensed accountant) are not allowable under this section unless they provide advice and analysis directly applying their professional or technical expertise and unless the advice or analysis is rendered directly and solely in the preparation, submission or

negotiation of a covered Federal action. Thus, for example, communications with the intent to influence made by a lawyer that do not provide legal advice or analysis directly and solely related to the legal aspects of his or her client's proposal, but generally advocate one proposal over another are not allowable under this section because the lawyer is not providing professional legal services. Similarly, communications with the intent to influence made by an engineer providing an engineering analysis prior to the preparation or submission of a bid or proposal are not allowable under this section since the engineer is providing technical services but not directly in the preparation, submission or negotiation of a covered Federal action.

(C) Requirements imposed by or pursuant to law as a condition for receiving a covered Federal award include those required by law or regulation and any other requirements in the actual award documents.

(D) Only those services expressly authorized by subdivisions (b)(3)(ii)(A)(1) and (2) of this clause are permitted under this clause.

(E) The reporting requirements of FAR 3.803(a) shall not apply with respect to payments of reasonable compensation made to regularly employed officers or employees of a person.

(iii) Disclosure.

(A) The Contractor who requests or receives from an agency a Federal contract shall file with that agency a disclosure form, OMB standard form LLL, Disclosure of Lobbying Activities, if such person has made or has agreed to make any payment using nonappropriated funds (to include profits from any covered Federal action), which would be prohibited under subparagraph (b)(1) of this clause, if paid for with appropriated funds.

(B) The Contractor shall file a disclosure form at the end of each calendar quarter in which there occurs any event that materially affects the accuracy of the information contained in any disclosure form previously filed by such person under subparagraph (c)(1) of this clause. An event that materially affects the accuracy of the information reported includes--

(1) A cumulative increase of $25,000 or more in the amount paid or expected to be paid for influencing or attempting to influence a covered Federal action; or

(2) A change in the person(s) or individual(s) influencing or attempting to influence a covered Federal action; or

(3) A change in the officer(s), employee(s), or Member(s) contacted to influence or attempt to influence a covered Federal action.

(C) The Contractor shall require the submittal of a certification, and if required, a disclosure form by any person who requests or receives any subcontract exceeding $100,000 under the Federal contract.

(D) All subcontractor disclosure forms (but not certifications) shall be forwarded from tier to tier until received by the prime Contractor. The prime Contractor shall submit all disclosures to the Contracting Officer at the end of the calendar quarter in which the disclosure form is submitted by the subcontractor. Each subcontractor certification shall be retained in the subcontract file of the awarding Contractor.

(iv) Agreement. The Contractor agrees not to make any payment prohibited by this clause.

(v) Penalties.

(A) Any person who makes an expenditure prohibited under paragraph (a) of this clause or who fails to file or amend the disclosure form to be filed or amended by paragraph (b) of this clause shall be subject to civil penalties as provided for by 31 U.S.C. 1352. An imposition of a civil penalty does not prevent the Government from seeking any other remedy that may be applicable.

(B) Contractors may rely without liability on the representation made by their subcontractors in the certification and disclosure form.

(vi) Cost allowability. Nothing in this clause makes allowable or reasonable any costs which would otherwise be unallowable or unreasonable. Conversely, costs made specifically unallowable by the requirements in this clause will not be made allowable under any other provision.

12. *FAR 52.204-4 PRINTED OR COPIED DOUBLE-SIDED ON RECYCLED PAPER (AUG 2000)

(a) Definitions. As used in this clause—

"Postconsumer material" means a material or finished product that has served its intended use and has been discarded for disposal or recovery, having completed its life as a consumer item. Postconsumer material is a part of the broader category of "recovered material." For paper and paper products, postconsumer material means "postconsumer fiber" defined by the U.S. Environmental Protection Agency (EPA) as—

(1) Paper, paperboard, and fibrous materials from retail stores, office buildings, homes, and so forth, after they have passed through their end-usage as a consumer item, including: used corrugated boxes; old newspapers; old magazines; mixed waste paper; tabulating cards; and used cordage; or

(2) All paper, paperboard, and fibrous materials that enter and are collected from municipal solid waste; but not

(3) Fiber derived from printers' over-runs, converters' scrap, and over-issue publications.

"Printed or copied double-sided" means printing or reproducing a document so that information is on both sides of a sheet of paper.

"Recovered material," for paper and paper products, is defined by EPA in its Comprehensive Procurement Guideline as "recovered fiber" and means the following materials:

(1) Postconsumer fiber; and

(2) Manufacturing wastes such as—

(i) Dry paper and paperboard waste generated after completion of the papermaking process (that is, those manufacturing operations up to and including the cutting and trimming of the paper machine reel into smaller rolls or rough sheets) including: envelope cuttings, bindery trimmings, and other paper and paperboard waste resulting from printing, cutting, forming, and other converting operations; bag, box, and carton manufacturing wastes; and butt rolls, mill wrappers, and rejected unused stock; and

(ii) Repulped finished paper and paperboard from obsolete inventories of paper and paperboard manufacturers, merchants, wholesalers, dealers, printers, converters, or others.

(b) In accordance with Section 101 of Executive Order 13101 of September 14, 1998, Greening the Government through Waste Prevention, Recycling, and Federal Acquisition, the Contractor is encouraged to submit paper documents, such as offers, letters, or reports, that are printed or copied double-sided on recycled paper that meet minimum content standards specified in Section 505 of Executive Order 13101, when not using electronic commerce methods to submit information or data to the Government.

(c) If the Contractor cannot purchase high-speed copier paper, offset paper, forms bond, computer printout paper, carbonless paper, file folders, white wove envelopes, writing and office paper, book paper, cotton fiber paper, and cover stock meeting the 30 percent postconsumer material standard for use in submitting paper documents to the Government, it should use paper containing no less than 20 percent postconsumer material. This lesser standard should be used only when paper meeting the 30 percent postconsumer material standard is not obtainable at a reasonable price or does not meet reasonable performance standards.

(End of clause)

13. DFARS 252.204-7003 CONTROL OF GOVERNMENT PERSONNEL WORK PRODUCT (APR 1992)

The Contractor's procedures for protecting against unauthorized disclosure of information shall not require Department of Defense employees or members of the Armed Forces to relinquish control of their work products, whether classified or not, to the Contractor.

14. *FAR 52.209-6 PROTECTING THE GOVERNMENTS INTEREST WHEN SUBCONTRACTING WITH CONTRACTORS DEBARRED, SUSPENDED, OR PROPOSED FOR DEBARMENT (JUL 1995)

(a) The Government suspends or debars Contractors to protect the Government's interests. The Contractor shall not enter into any subcontract in excess of $25,000 with a Contractor that is debarred, suspended, or proposed for debarment unless there is a compelling reason to do so.

(b) The Contractor shall require each proposed first-tier subcontractor, whose subcontract will exceed $25,000, to disclose to the Contractor, in writing, whether as of the time of award of the subcontract, the subcontractor, or its principals, is or is not debarred, suspended, or proposed for debarment by the Federal Government.

(c) A corporate office or a designee of the Contractor shall notify the Contracting Officer, in writing, before entering into a subcontract with a party that is debarred, suspended, or proposed for debarment (see FAR 9.404 for information on the List of Parties Excluded from Procurement Programs). The notice must include the following:

(1) The name of the subcontractor.

(2) The Contractor's knowledge of the reasons for the subcontractor being on the List of Parties Excluded from Procurement Programs.

(3) The compelling reason(s) for doing business with the subcontractor notwithstanding its inclusion on the List of Parties Excluded From Procurement Programs.

(4) The systems and procedures the Contractor has established to ensure that it is fully protecting the Government's interests when dealing with such subcontractor in view of the specific basis for the party's debarment, suspension, or proposed debarment.

15. DFARS 252.209-7004 SUBCONTRACTING WITH FIRMS THAT ARE OWNED OR CONTROLLED BY THE GOVERNMENT OF A TERRORIST COUNTRY (MAR 1998)

(a) Unless the Government determines that there is a compelling reason to do so, the Contractor shall not enter into any subcontract in excess of $25,000 with a firm, or a subsidiary of a firm, that is identified, on the List of Parties Excluded from Federal Procurement and Nonprocurement Programs, as being ineligible for the award of Defense contracts or subcontracts because it is owned or controlled by the government of a terrorist country.

(b) A corporate officer or a designee of the Contractor shall notify the Contracting Officer, in writing, before entering into a subcontract with a party that is identified, on the List of Parties Excluded from Federal Procurement and Nonprocurement Programs, as being ineligible for the award of Defense contracts or subcontracts because it is owned or controlled by the government of a terrorist country. The notice must include the name of the proposed subcontractor and the compelling reason(s) for doing business with the subcontractor notwithstanding its inclusion on the List of Parties Excluded From Federal Procurement and Nonprocurement Programs.

(End of clause)

16. *FAR 52.211-15 DEFENSE PRIORITY AND ALLOCATION REQUIREMENTS (SEP 1990) [<u>For Military Contract's Only</u>]

This is a rated order certified for national defense use, and the Contractor shall follow all the requirements of the Defense Priorities and Allocations System regulation (15 CFR 700).

17. FAR 52.211-18 VARIATION IN ESTIMATED QUANTITY (APR 1984)

If the quantity of a unit-priced item in this contract is an estimated quantity and the actual quantity of the unit-priced item varies more than 15 percent above or below the estimated quantity, an equitable adjustment in the contract price shall be made upon demand of either party. The equitable adjustment shall be based upon any increase or decrease in costs due solely to the variation above 115 percent or below 85 percent of the estimated quantity. If the quantity variation is such as to cause an increase in the time necessary for completion, the Contractor may request, in writing, an extension of time, to be received by the Contracting Officer within 10 days from the beginning of the delay, or within such further period as may be granted by the Contracting Officer before the date of final settlement of the contract. Upon the receipt of a written request for an extension, the Contracting

Officer shall ascertain the facts and make an adjustment for extending the completion date as, in the judgement of the Contracting Officer, is justified.

18. *FAR 52.214-26 AUDIT AND RECORDS--SEALED BIDDING (OCT 1997)

(a) As used in this clause, "records" includes books, documents, accounting procedures and practices, and other data, regardless of whether such items are in written form, in the form of computer data, or in any other form.

(b) Cost or pricing data. If the Contractor has submitted cost or pricing data in connection with the pricing of any modification to this contract, the Contracting Officer or authorized representative of the Contracting Officer, in order to evaluate the accuracy, completeness, and currency of the cost or pricing data, shall have the right to examine and audit all of the Contractor's records, including computations and projections related to--

(1) The proposal for the modification;

(2) The discussions conducted on the proposal(s), including those related to negotiating;

(3) Pricing of the modification; or

(4 Performance of the modification.

(c) Comptroller General. In the case of pricing any modification, the Comptroller General of the United States, or an authorized representative, shall have the same rights as specified in paragraph (b) of this clause.

(d) Availability. The Contractor shall make available at its office at all reasonable times the materials described in paragraph (b) of this clause, for examination, audit, or reproduction, until 3 years after final payment under this contract, or for any other period specified in Subpart 4.7 of the Federal Acquisition Regulation (FAR). FAR Subpart 4.7, Contractor Records Retention, in effect on the date of this contract, is incorporated by reference in its entirety and made a part of this contract.

(1) If this contract is completely or partially terminated, the records relating to the work terminated shall be made available for 3 years after any resulting final termination settlement.

(2) Records pertaining to appeals under the Disputes clause or to litigation or the settlement of claims arising under or relating to the performance of this contract shall be made available until disposition of such appeals, litigation, or claims.

(e) The Contractor shall insert a clause containing all the provisions of this clause, including this paragraph (e), in all subcontracts expected to exceed the threshold in FAR 15.403-4(a)(1) for submission of cost or pricing data.

19. *FAR 52.214-27 PRICE REDUCTION FOR DEFECTIVE COST OR PRICING DATA—MODIFICATIONS--SEALED BIDDING (OCT 1997)

(a) This clause shall become operative only for any modification to this contract involving aggregate increases and/or decreases in costs, plus applicable profits, expected to exceed the threshold for submission of cost or pricing data at FAR 15.403-4(a)(1), except that this clause does not apply to any modification if an exception under FAR 15.403-1(b) applies.

(b) If any price, including profit, negotiated in connection with any modification under this clause, was increased by any significant amount because

(1) The Contractor or a subcontractor furnished cost or pricing data that were not complete, accurate, and current as certified in its Certificate of Current Cost or Pricing Data,

(2) a subcontractor or prospective subcontractor furnished the Contractor cost or pricing data that were not complete, accurate, and current as certified in the Contractor's Certificate of Current Cost or Pricing Data, or

(3) Any of these parties furnished data of any description that were not accurate, the price shall be reduced accordingly and the contract shall be modified to reflect the reduction. This right to a price reduction is limited to that resulting from defects in data relating to modifications for which this clause becomes operative under paragraph (a) of this clause.

(c) Any reduction in the contract price under paragraph (b) above due to defective data from a prospective subcontractor that was not subsequently awarded the subcontract shall be limited to the amount, plus applicable overhead and profit markup, by which

(1) the actual subcontract or

(2) the actual cost to the Contractor, if there was no subcontract, was less than the prospective subcontract cost estimate submitted by the Contractor; provided, that the actual subcontract price was not itself affected by defective cost or pricing data.

(d) (1) If the Contracting Officer determines under paragraph (b) of this clause that a price or cost reduction should be made, the Contractor agrees not to raise the following matters as a defense:

(i) The Contractor or subcontractor was a sole source supplier or otherwise was in a superior bargaining position and thus the price of the contract would not have been modified even if accurate, complete, and current cost or pricing data had been submitted.

(ii) The Contracting Officer should have known that the cost or pricing data in issue were defective even though the Contractor or subcontractor took no affirmative action to bring the character of the data to the attention of the Contracting Officer.

(iii) The contract was based on an agreement about the total cost of the contract and there was no agreement about the cost of each item procured under the contract.

(iv) The Contractor or subcontractor did not submit a Certificate of Current Cost or Pricing Data.

(2) (i) Except as prohibited by subdivision (d)(2)(ii) of this clause, an offset in an amount determined appropriate by the Contracting Officer based upon the facts shall be allowed against the amount of a contract price reduction if--

(A) The Contractor certifies to the Contracting Officer that, to the best of the Contractor's knowledge and belief, the Contractor is entitled to the offset in the amount requested; and

(B) The Contractor proves that the cost or pricing data were available before the date of agreement on the price of the contract (or price of the modification) and that the data were not submitted before such date.

(ii) An offset shall not be allowed if--

(A) The understated data was known by the Contractor to be understated when the Certificate of Current Cost or Pricing Data was signed; or

(B) The Government proves that the facts demonstrate that the contract price would not have increased in the amount to be offset even if the available data had been submitted before the date of agreement on price.

(e) If any reduction in the contract price under this clause reduces the price of items for which payment was made prior to the date of the modification reflecting the price reduction, the Contractor shall be liable to and shall pay the United States at the time such overpayment is repaid--

(1) Simple interest on the amount of such overpayment to be computed from the date(s) of overpayment to the Contractor to the date the Government is repaid by the Contractor at the applicable underpayment rate effective for each quarter prescribed by the Secretary of the Treasury under 26 U.S.C. 6621(a)(2); and

(2) A penalty equal to the amount of the overpayment, if the Contractor of subcontractor knowingly submitted cost or pricing data which were incomplete, inaccurate, or noncurrent.

20. *FAR 52.214-28 SUBCONTRACTOR COST OR PRICING DATA--MODIFICATIONS—SEALED BIDDING (OCT 1997)

(a) The requirements of paragraphs (b) and (c) of this clause shall--

(1) Become operative only for any modification to this contract involving aggregate increases and/or decreases in costs, plus applicable profits, expected to exceed the threshold for submission of cost or pricing data at FAR 15.403-4(a)(1); and

(2) Be limited to such modifications.

(b) Before awarding any subcontract expected to exceed the threshold for submission of cost or pricing data at FAR 15.403-4(a)(1), on the date of agreement on price or the date of award, whichever is later; or before pricing any subcontract modification involving aggregate increases and/or decreases in costs, plus applicable profits, expected to exceed the threshold for submission of cost or pricing data at FAR 15.403-4(a)(1), the Contractor shall require the subcontractor to submit cost or pricing data (actually or by specific identification in writing), unless an exception under FAR 15.403-1(b) applies.

(c) The Contractor shall require the subcontractor to certify in substantially the form prescribed in FAR subsection 15.406-2 that, to the best of its knowledge and belief, the data submitted under paragraph (b) above were accurate, complete, and current as of the date of agreement on the negotiated price of the subcontract or subcontract modification.

(d) The Contractor shall insert the substance of this clause, including this paragraph (d), in each subcontract that when entered into, exceeds the threshold for submission of cost or pricing data at FAR 15.403-4(a)(1).

(End of clause)

21. *FAR 52.219-4 NOTICE OF PRICE EVALUATION PREFERENCE FOR HUBZONE SMALL BUSINESS CONCERNS (JAN 1999)

(a) *Definition.* "HUBZone small business concern," as used in this clause, means a small business concern that appears on the List of Qualified HUBZone Small Business Concerns maintained by the Small Business Administration.

(b) *Evaluation preference*. (1) Offers will be evaluated by adding a factor of 10 percent to the price of all offers, except—

(i) Offers from HUBZone small business concerns that have not waived the evaluation preference;

(ii) Otherwise successful offers from small business concerns;

(iii) Otherwise successful offers of eligible products under the Trade Agreements Act when the dollar threshold for application of the Act is exceeded (see 25.402 of the Federal Acquisition Regulation (FAR)); and

(iv) Otherwise successful offers where application of the factor would be inconsistent with a Memorandum of Understanding or other international agreement with a foreign government.

(2) The factor of 10 percent shall be applied on a line item basis or to any group of items on which award may be made. Other evaluation factors described in the solicitation shall be applied before application of the factor.

(3) A concern that is both a HUBZone small business concern and a small disadvantaged business concern will receive the benefit of both the HUBZone small business price evaluation preference and the small disadvantaged business price evaluation adjustment (see FAR clause 52.219-23). Each applicable price evaluation preference or adjustment shall be calculated independently against an offeror's base offer. These individual preference amounts shall be added together to arrive at the total evaluated price for that offer.

(c) *Waiver of evaluation preference.* A HUBZone small business concern may elect to waive the evaluation preference, in which case the factor will be added to its offer for evaluation purposes. The agreements in paragraph (d) of this clause do not apply if the offeror has waived the evaluation preference.

[ ] Offeror elects to waive the evaluation preference.

(d) *Agreement.* A HUBZone small business concern agrees that in the performance of the contract, in the case of a contract for—

(1) Services (except construction), at least 50 percent of the cost of personnel for contract performance will be spent for employees of the concern or employees of other HUBZone small business concerns;

(2) Supplies (other than procurement from a nonmanufacturer of such supplies), at least 50 percent of the cost of manufacturing, excluding the cost of materials, will be performed by the concern or other HUBZone

small business concerns;

(3) General construction, at least 15 percent of the cost of the contract performance incurred for personnel will be will be spent on the concern's employees or the employees of other HUBZone small business concerns; or

(4) Construction by special trade contractors, at least 25 percent of the cost of the contract performance incurred for personnel will be spent on the concern's employees or the employees of other HUBZone small business concerns.

(e) A HUBZone joint venture agrees that in the performance of the contract, the applicable percentage specified in paragraph (d) of this clause will be performed by the HUBZone small business participant or participants.

(f) A HUBZone small business concern nonmanufacturer agrees to furnish in performing this contract only end items manufactured or produced by HUBZone small business manufacturer concerns. This paragraph does not apply in connection with construction or service contracts.

(End of clause)

22. *FAR 52.219-8 UTILIZATION OF SMALL BUSINESS CONCERNS (OCT 2000)

(a) It is the policy of the United States that small business concerns, veteran-owned small business concerns, service-disabled veteran-owned small business concerns, HUBZone small business concerns, small disadvantaged business concerns, and women-owned small business concerns shall have the maximum practicable opportunity to participate in performing contracts let by any Federal agency, including contracts and subcontracts for subsystems, assemblies, components, and related services for major systems. It is further the policy of the United States that its prime contractors establish procedures to ensure the timely payment of amounts due pursuant to the terms of their subcontracts with small business concerns, veteran-owned small business concerns, service-disabled veteran-owned small business concerns, HUBZone small business concerns, small disadvantaged business concerns, and women-owned small business concerns.

(b) The Contractor hereby agrees to carry out this policy in the awarding of subcontracts to the fullest extent consistent with efficient contract performance. The Contractor further agrees to cooperate in any studies or surveys as may be conducted by the United States Small Business Administration or the awarding agency of the United States as may be necessary to determine the extent of the Contractor ’s compliance with this clause.

(c) *Definitions.* As used in this contract—

“HUBZone small business concern” means a small business concern that appears on the List of Qualified HUBZone Small Business Concerns maintained by the Small Business Administration .

“Service-disabled veteran-owned small business concern ” —

(1) Means a small business concern—

(i) Not less than 51 percent of which is owned by one or more service-disabled veterans or, in the case of any publicly owned business, not less than 51 percent of the stock of which is owned by one or more service-disabled veterans; and

(ii) The management and daily business operations of which are controlled by one or more service-disabled veterans or, in the case of a veteran with permanent and severe disability, the spouse or permanent caregiver of such veteran.

(2) Service-disabled veteran means a veteran, as defined in 38 U.S.C. 101(2), with a disability that is service-connected, as defined in 38 U.S.C. 101(16).

“Small business concern” means a small business as defined pursuant to Section 3 of the Small Business Act and relevant regulations promulgated pursuant thereto.

“Small disadvantaged business concern” means a small business concern that represents, as part of its offer that—

(1) It has received certification as a small disadvantaged business concern consistent with 13 CFR part 124, Subpart B;

(2) No material change in disadvantaged ownership and control has occurred since its certification;

(3) Where the concern is owned by one or more individuals, the net worth of each individual upon whom the certification is based does not exceed $750,000 after taking into account the applicable exclusions set forth at 13 CFR 124.104(c)(2); and

(4) It is identified, on the date of its representation, as a certified small disadvantaged business in the database maintained by the Small Business Administration (PRO-Net).

"Veteran-owned small business concern" means a small business concern—

(1) Not less than 51 percent of which is owned by one or more veterans (as defined at 38 U.S.C. 101(2)) or, in the case of any publicly owned business, not less than 51 percent of the stock of which is owned by one or more veterans; and

(2) The management and daily business operations of which are controlled by one or more veterans.

"Women-owned small business concern" means a small business concern—

(1) That is at least 51 percent owned by one or more women, or, in the case of any publicly owned business, at least 51 percent of the stock of which is owned by one or more women; and

(2) Whose management and daily business operations are controlled by one or more women.

(d) Contractors acting in good faith may rely on written representations by their subcontractors regarding their status as a small business concern, a veteran-owned small business concern, a service-disabled veteran-owned small business concern, a HUBZone small business concern, a small disadvantaged business concern, or a women-owned small business concern.

(End of clause)

23. *FAR 52.219-9 SMALL BUSINESS SUBCONTRACTING PLAN (JAN 2002) [<u>When Contracting By Negotiations</u>]

(a) This clause does not apply to small business concerns.

(b) *Definitions*. As used in this clause—

"Commercial item" means a product or service that satisfies the definition of commercial item in section 2.101 of the Federal Acquisition Regulation.

"Commercial plan" means a subcontracting plan (including goals) that covers the offeror's fiscal year and that applies to the entire production of commercial items sold by either the entire company or a portion thereof (*e.g.*, division, plant, or product line).

"Individual contract plan" means a subcontracting plan that covers the entire contract period (including option periods), applies to a specific contract, and has goals that are based on the offeror's planned subcontracting in support of the specific contract, except that indirect costs incurred for common or joint purposes may be allocated on a prorated basis to the contract.

"Master plan" means a subcontracting plan that contains all the required elements of an individual contract plan, except goals, and may be incorporated into individual contract plans, provided the master plan has been approved.

"Subcontract" means any agreement (other than one involving an employer-employee relationship) entered into by a Federal Government prime Contractor or subcontractor calling for supplies or services required for performance of the contract or subcontract.

(c) The offeror, upon request by the Contracting Officer, shall submit and negotiate a subcontracting plan, where applicable, that separately addresses subcontracting with small business, veteran-owned small business, service-disabled veteran-owned small business, HUBZone small business concerns, small disadvantaged business, and women-owned small business concerns. If the offeror is submitting an individual contract plan, the plan must separately address subcontracting with small business, veteran-owned small business, service-disabled veteran-owned small business, HUBZone small business, small disadvantaged business, and women-owned small business concerns, with a separate part for the basic contract and separate parts for each option (if any). The plan shall be included in and made a part of the resultant contract. The subcontracting plan shall be negotiated within the time specified by the Contracting Officer. Failure to submit and negotiate the subcontracting plan shall make the offeror ineligible for award of a contract.

(d) The offeror's subcontracting plan shall include the following:

(1) Goals, expressed in terms of percentages of total planned subcontracting dollars, for the use of small business, veteran-owned small business, service-disabled veteran-owned small business, HUBZone small business, small disadvantaged business, and women-owned small business concerns as subcontractors. The offeror shall include all subcontracts that contribute to contract performance, and may

include a proportionate share of products and services that are normally allocated as indirect costs.

(2) A statement of—

(i) Total dollars planned to be subcontracted for an individual contract plan; or the offeror's total projected sales, expressed in dollars, and the total value of projected subcontracts to support the sales for a commercial plan;

(ii) Total dollars planned to be subcontracted to small business concerns;

(iii) Total dollars planned to be subcontracted to veteran-owned small business concerns;

(iv) Total dollars planned to be subcontracted to service-disabled veteran-owned small business;

(v) Total dollars planned to be subcontracted to HUBZone small business concerns;

(vi) Total dollars planned to be subcontracted to small disadvantaged business concerns; and

(vii) Total dollars planned to be subcontracted to women-owned small business concerns.

(3) A description of the principal types of supplies and services to be subcontracted, and an identification of the types planned for subcontracting to—

(i) Small business concerns;

(ii) Veteran-owned small business concerns;

(iii) Service-disabled veteran-owned small business concerns;

(iv) HUBZone small business concerns;

(v) Small disadvantaged business concerns; and

(vi) Women-owned small business concerns.

(4) A description of the method used to develop the subcontracting goals in paragraph (d)(1) of this clause.

(5) A description of the method used to identify potential sources for solicitation purposes (*e.g.*, existing company source lists, the Procurement Marketing and Access Network (PRO-Net) of the Small Business Administration (SBA), veterans service organizations, the National Minority Purchasing Council Vendor Information Service, the Research and Information Division of the Minority Business Development Agency in the Department of Commerce, or small, HUBZone, small disadvantaged, and women-owned small business trade associations). A firm may rely on the information contained in PRO-Net as an accurate representation of a concern's size and ownership characteristics for the purposes of maintaining a small, veteran-owned small, service-disabled veteran-owned small, HUBZone small, small disadvantaged, and women-owned small business source list. Use of PRONet as its source list does not relieve a firm of its responsibilities (*e.g.*, outreach, assistance, counseling, or publicizing subcontracting opportunities) in this clause.

(6) A statement as to whether or not the offeror included indirect costs in establishing subcontracting goals, and a description of the method used to determine the proportionate share of indirect costs to be incurred with—

(i) Small business concerns;

(ii) Veteran-owned small business concerns;

(iii) Service-disabled veteran-owned small business concerns;

(iv) HUBZone small business concerns;

(v) Small disadvantaged business concerns; and

(vi) Women-owned small business concerns.

(7) The name of the individual employed by the offeror who will administer the offeror's subcontracting program, and a description of the duties of the individual.

(8) A description of the efforts the offeror will make to assure that small business, veteran-owned small business, service-disabled veteran-owned small business, HUBZone small business, small disadvantaged business, and women-owned small business concerns have an equitable opportunity to compete for subcontracts.

(9) Assurances that the offeror will include the clause of this contract entitled "Utilization of Small Business Concerns" in all subcontracts that offer further subcontracting opportunities, and that the offeror will require all subcontractors (except small business concerns) that receive subcontracts in excess of $500,000 ($1,000,000 for construction of any public facility) to adopt a subcontracting plan that complies with the requirements of this clause.

(10) Assurances that the offeror will—

(i) Cooperate in any studies or surveys as may be required;

(ii) Submit periodic reports so that the Government can determine the extent of compliance by the offeror with the subcontracting plan;

(iii) Submit Standard Form (SF) 294, Subcontracting Report for Individual Contracts, and/or SF 295, Summary Subcontract Report, in accordance with paragraph (j) of this clause. The reports shall provide information on subcontract awards to small business concerns, veteran-owned small business concerns, service-disabled veteran-owned small business concerns, HUBZone small business concerns, small disadvantaged business concerns, women-owned small business concerns, and Historically Black Colleges and Universities and Minority Institutions. Reporting shall be in accordance with the instructions on the forms or as provided in agency regulations.

(iv) Ensure that its subcontractors agree to submit SF 294 and SF 295.

(11) A description of the types of records that will be maintained concerning procedures that have been adopted to comply with the requirements and goals in the plan, including establishing source lists; and a description of the offeror's efforts to locate small business, veteran-owned small business, service-disabled veteran-owned small business, HUBZone small business, small disadvantaged business, and women-owned small business concerns and award subcontracts to them. The records shall include at least the following (on a plant-wide or company-wide basis, unless otherwise indicated):

(i) Source lists (*e.g.*, PRO-Net), guides, and other data that identify small business, veteran-owned small business, service-disabled veteran-owned small business, HUBZone small business, small disadvantaged business, and women-owned small business concerns.

(ii) Organizations contacted in an attempt to locate sources that are small business, veteran-owned small business, service-disabled veteran-owned small business, HUBZone small business, small disadvantaged business, or women-owned small business concerns.

(iii) Records on each subcontract solicitation resulting in an award of more than $100,000, indicating—

(A) Whether small business concerns were solicited and, if not, why not;

(B) Whether veteran-owned small business concerns were solicited and, if not, why not;

(C) Whether service-disabled veteran-owned small business concerns were solicited and, if not, why not;

(D) Whether HUBZone small business concerns were solicited and, if not, why not;

(E) Whether small disadvantaged business concerns were solicited and, if not, why not;

(F) Whether women-owned small business concerns were solicited and, if not, why not; and

(G) If applicable, the reason award was not made to a small business concern.

(iv) Records of any outreach efforts to contact—

(A) Trade associations;

(B) Business development organizations;

(C) Conferences and trade fairs to locate small, HUBZone small, small disadvantaged, and women-owned small business sources; and

(D) Veterans service organizations.

(v) Records of internal guidance and encouragement provided to buyers through—

(A) Workshops, seminars, training, etc.; and

(B) Monitoring performance to evaluate compliance with the program’s requirements.

(vi) On a contract-by-contract basis, records to support award data submitted by the offeror to the Government, including the name, address, and business size of each subcontractor. Contractors having commercial plans need not comply with this requirement.

(e) In order to effectively implement this plan to the extent consistent with efficient contract performance, the Contractor shall perform the following functions:

(1) Assist small business, veteran-owned small business, service-disabled veteran-owned small business, HUBZone small business, small disadvantaged business, and women-owned small business concerns by arranging solicitations, time for the preparation of bids, quantities, specifications, and delivery schedules so as to

facilitate the participation by such concerns. Where the Contractor's lists of potential small business, veteran-owned small business, service-disabled veteran-owned small business, HUBZone small business, small disadvantaged business, and women-owned small business subcontractors are excessively long, reasonable effort shall be made to give all such small business concerns an opportunity to compete over a period of time.

(2) Provide adequate and timely consideration of the potentialities of small business, veteran-owned small business, service-disabled veteran-owned small business, HUBZone small business, small disadvantaged business, and women-owned small business concerns in all "make-or-buy" decisions.

(3) Counsel and discuss subcontracting opportunities with representatives of small business, veteran-owned small business, service-disabled veteran-owned small business , HUBZone small business, small disadvantaged business, and women-owned small business firms.

(4) Provide notice to subcontractors concerning penalties and remedies for misrepresentations of business status as small, veteran-owned small business, HUBZone small, small disadvantaged, or women-owned small business for the purpose of obtaining a subcontract that is to be included as part or all of a goal contained in the Contractor's subcontracting plan.

(f) A master plan on a plant or division-wide basis that contains all the elements required by paragraph (d) of this clause, except goals, may be incorporated by reference as a part of the subcontracting plan required of the offeror by this clause; provided —

(1) The master plan has been approved;

(2) The offeror ensures that the master plan is updated as necessary and provides copies of the approved master plan, including evidence of its approval, to the Contracting Officer; and

(3) Goals and any deviations from the master plan deemed necessary by the Contracting Officer to satisfy the requirements of this contract are set forth in the individual subcontracting plan.

(g) A commercial plan is the preferred type of subcontracting plan for contractors furnishing commercial items. The commercial plan shall relate to the offeror's planned subcontracting generally, for both commercial and Government business, rather than solely to the Government contract. Commercial plans are also preferred for subcontractors that provide commercial items under a prime contract, whether or not the prime contractor is supplying a commercial item.

(h) Prior compliance of the offeror with other such subcontracting plans under previous contracts will be considered by the Contracting Officer in determining the responsibility of the offeror for award of the contract.

(i) The failure of the Contractor or subcontractor to comply in good faith with—

(1) The clause of this contract entitled "Utilization Of Small Business Concerns;" or

(2) An approved plan required by this clause, shall be a material breach of the contract.

(j) The Contractor shall submit the following reports:

(1) *Standard Form 294, Subcontracting Report for Individual Contracts.* This report shall be submitted to the Contracting Officer semiannually and at contract completion. The report covers subcontract award data related to this contract. This report is not required for commercial plans.

(2) *Standard Form 295, Summary Subcontract Report.* This report encompasses all of the contracts with the awarding agency. It must be submitted semi-annually for contracts with the Department of Defense and annually for contracts with civilian agencies. If the reporting activity is covered by a commercial plan, the reporting activity must report annually all subcontract awards under that plan. All reports submitted at the close of each fiscal year (both individual and commercial plans) shall include a breakout, in the Contractor's format, of subcontract awards, in whole dollars, to small disadvantaged business concerns by North American Industry Classification System (NAICS) Industry Subsector. For a commercial plan, the Contractor may obtain from each of its subcontractors a predominant NAICS Industry Subsector and report all awards to that subcontractor under its predominant NAICS Industry Subsector.

(End of clause)

24. *FAR 52.219-9 SMALL BUSINESS SUBCONTRACTING PLAN (JAN 2002) --ALTERNATE I (OCT 2001) [<u>When Contracting By Sealed Bidding</u>]

(a) This clause does not apply to small business concerns.

(b) *Definitions*. As used in this clause—

"Commercial item" means a product or service that satisfies the definition of commercial item in section 2.101 of the Federal Acquisition Regulation.

"Commercial plan" means a subcontracting plan (including goals) that covers the offeror's fiscal year and that applies to the entire production of commercial items sold by either the entire company or a portion thereof (*e.g.*, division, plant, or product line).

"Individual contract plan" means a subcontracting plan that covers the entire contract period (including option periods), applies to a specific contract, and has goals that are based on the offeror's planned subcontracting in support of the specific contract, except that indirect costs incurred for common or joint purposes may be allocated on a prorated basis to the contract.

"Master plan" means a subcontracting plan that contains all the required elements of an individual contract plan, except goals, and may be incorporated into individual contract plans, provided the master plan has been approved.

"Subcontract" means any agreement (other than one involving an employer-employee relationship) entered into by a Federal Government prime Contractor or subcontractor calling for supplies or services required for performance of the contract or subcontract.

(c) The apparent low bidder, upon request by the Contracting Officer, shall submit a subcontracting plan, where applicable, that separately addresses subcontracting with small business, veteran-owned small business, service-disabled veteran-owned small business, HUBZone small business, small disadvantaged business, and women-owned small business concerns. If the bidder is submitting an individual contract plan, the plan must separately address subcontracting with small business, veteran-owned small business, service-disabled veteran-owned small business, HUBZone small business, small disadvantaged business, and women-owned small business concerns, with a separate part for the basic contract and separate parts for each option (if any). The plan shall be included in and made a part of the resultant contract. The subcontracting plan shall be submitted within the time specified by the Contracting Officer. Failure to submit the subcontracting plan shall make the bidder ineligible for the award of a contract.

(d) The offeror's subcontracting plan shall include the following:

(1) Goals, expressed in terms of percentages of total planned subcontracting dollars, for the use of small business, veteran-owned small business, service-disabled veteran-owned small business, HUBZone small business, small disadvantaged business, and women-owned small business concerns as subcontractors. The offeror shall include all subcontracts that contribute to contract performance, and may include a proportionate share of products and services that are normally allocated as indirect costs.

(2) A statement of—

(i) Total dollars planned to be subcontracted for an individual contract plan; or the offeror's total projected sales, expressed in dollars, and the total value of projected subcontracts to support the sales for a commercial plan;

(ii) Total dollars planned to be subcontracted to small business concerns;

(iii) Total dollars planned to be subcontracted to veteran-owned small business concerns;

(iv) Total dollars planned to be subcontracted to service-disabled veteran-owned small business;

(v) Total dollars planned to be subcontracted to HUBZone small business concerns;

(vi) Total dollars planned to be subcontracted to small disadvantaged business concerns; and

(vii) Total dollars planned to be subcontracted to women-owned small business concerns.

(3) A description of the principal types of supplies and services to be subcontracted, and an identification of the types planned for subcontracting to—

(i) Small business concerns;

(ii) Veteran-owned small business concerns;

(iii) Service-disabled veteran-owned small business concerns;

(iv) HUBZone small business concerns;

(v) Small disadvantaged business concerns; and

(vi) Women-owned small business concerns.

(4) A description of the method used to develop the subcontracting goals in paragraph (d)(1) of this clause.

(5) A description of the method used to identify potential sources for solicitation purposes (*e.g.*, existing company source lists, the Procurement Marketing and Access Network (PRO-Net) of the Small Business Administration (SBA), veterans service organizations, the National Minority Purchasing Council Vendor

Information Service, the Research and Information Division of the Minority Business Development Agency in the Department of Commerce, or small, HUBZone, small disadvantaged, and women-owned small business trade associations). A firm may rely on the information contained in PRO-Net as an accurate representation of a concern's size and ownership characteristics for the purposes of maintaining a small, veteran-owned small, service-disabled veteran-owned small, HUBZone small, small disadvantaged, and women-owned small business source list. Use of PRONet as its source list does not relieve a firm of its responsibilities (*e.g.*, outreach, assistance, counseling, or publicizing subcontracting opportunities) in this clause.

(6) A statement as to whether or not the offeror included indirect costs in establishing subcontracting goals, and a description of the method used to determine the proportionate share of indirect costs to be incurred with—

(i) Small business concerns;

(ii) Veteran-owned small business concerns;

(iii) Service-disabled veteran-owned small business concerns;

(iv) HUBZone small business concerns;

(v) Small disadvantaged business concerns; and

(vi) Women-owned small business concerns.

(7) The name of the individual employed by the offeror who will administer the offeror's subcontracting program, and a description of the duties of the individual.

(8) A description of the efforts the offeror will make to assure that small business, veteran-owned small business, service-disabled veteran-owned small business, HUBZone small business, small disadvantaged business, and women-owned small business concerns have an equitable opportunity to compete for subcontracts.

(9) Assurances that the offeror will include the clause of this contract entitled "Utilization of Small Business Concerns" in all subcontracts that offer further subcontracting opportunities, and that the offeror will require all subcontractors (except small business concerns) that receive subcontracts in excess of $500,000 ($1,000,000 for construction of any public facility) to adopt a subcontracting plan that complies with the requirements of this clause.

(10) Assurances that the offeror will—

(i) Cooperate in any studies or surveys as may be required;

(ii) Submit periodic reports so that the Government can determine the extent of compliance by the offeror with the subcontracting plan;

(iii) Submit Standard Form (SF) 294, Subcontracting Report for Individual Contracts, and/or SF 295, Summary Subcontract Report, in accordance with paragraph (j) of this clause. The reports shall provide information on subcontract awards to small business concerns, veteran-owned small business concerns, service-disabled veteran-owned small business concerns, HUBZone small business concerns, small disadvantaged business concerns, women-owned small business concerns, and Historically Black Colleges and Universities and Minority Institutions. Reporting shall be in accordance with the instructions on the forms or as provided in agency regulations.

(iv) Ensure that its subcontractors agree to submit SF 294 and SF 295.

(11) A description of the types of records that will be maintained concerning procedures that have been adopted to comply with the requirements and goals in the plan, including establishing source lists; and a description of the offeror's efforts to locate small business, veteran-owned small business, service-disabled veteran-owned small business, HUBZone small business, small disadvantaged business, and women-owned small business concerns and award subcontracts to them. The records shall include at least the following (on a plant-wide or company-wide basis, unless otherwise indicated):

(i) Source lists (*e.g.*, PRO-Net), guides, and other data that identify small business, veteran-owned small business, service-disabled veteran-owned small business, HUBZone small business, small disadvantaged business, and women-owned small business concerns.

(ii) Organizations contacted in an attempt to locate sources that are small business, veteran-owned small business, service-disabled veteran-owned small business, HUBZone small business, small disadvantaged business, or women-owned small business concerns.

(iii) Records on each subcontract solicitation resulting in an award of more than $100,000, indicating—

(A) Whether small business concerns were solicited and, if not, why not;

(B) Whether veteran-owned small business concerns were solicited and, if not,

why not;

(C) Whether service-disabled veteran-owned small business concerns were solicited and, if not, why not;

(D) Whether HUBZone small business concerns were solicited and, if not, why not;

(E) Whether small disadvantaged business concerns were solicited and, if not, why not;

(F) Whether women-owned small business concerns were solicited and, if not, why not; and

(G) If applicable, the reason award was not made to a small business concern.

(iv) Records of any outreach efforts to contact—

(A) Trade associations;

(B) Business development organizations;

(C) Conferences and trade fairs to locate small, HUBZone small, small disadvantaged, and women-owned small business sources; and

(D) Veterans service organizations.

(v) Records of internal guidance and encouragement provided to buyers through—

(A) Workshops, seminars, training, etc.; and

(B) Monitoring performance to evaluate compliance with the program's requirements.

(vi) On a contract-by-contract basis, records to support award data submitted by the offeror to the Government, including the name, address, and business size of each subcontractor. Contractors having commercial plans need not comply with this requirement.

(e) In order to effectively implement this plan to the extent consistent with efficient contract performance, the Contractor shall perform the following functions:

(1) Assist small business, veteran-owned small business, service-disabled veteran-owned small business, HUBZone small business, small disadvantaged business, and women-owned small business concerns by arranging solicitations, time for the preparation of bids, quantities, specifications, and delivery schedules so as to facilitate the participation by such concerns. Where the Contractor's lists of potential small business, veteran-owned small business, service-disabled veteran-owned small business, HUBZone small business, small disadvantaged business, and women-owned small business subcontractors are excessively long, reasonable effort shall be made to give all such small business concerns an opportunity to compete over a period of time.

(2) Provide adequate and timely consideration of the potentialities of small business, veteran-owned small business, service-disabled veteran-owned small business, HUBZone small business, small disadvantaged business, and women-owned small business concerns in all "make-or-buy" decisions.

(3) Counsel and discuss subcontracting opportunities with representatives of small business, veteran-owned small business, service-disabled veteran-owned small business , HUBZone small business, small disadvantaged business, and women-owned small business firms.

(4) Provide notice to subcontractors concerning penalties and remedies for misrepresentations of business status as small, veteran-owned small business, HUBZone small, small disadvantaged, or women-owned small business for the purpose of obtaining a subcontract that is to be included as part or all of a goal contained in the Contractor's subcontracting plan.

(f) A master plan on a plant or division-wide basis that contains all the elements required by paragraph (d) of this clause, except goals, may be incorporated by reference as a part of the subcontracting plan required of the offeror by this clause; provided —

(1) The master plan has been approved;

(2) The offeror ensures that the master plan is updated as necessary and provides copies of the approved master plan, including evidence of its approval, to the Contracting Officer; and

(3) Goals and any deviations from the master plan deemed necessary by the Contracting Officer to satisfy the requirements of this contract are set forth in the individual subcontracting plan.

(g) A commercial plan is the preferred type of subcontracting plan for contractors furnishing commercial items. The commercial plan shall relate to the offeror's planned subcontracting generally, for both commercial and Government business, rather than solely to the Government contract. Commercial plans are also preferred for subcontractors that provide commercial items under a prime contract, whether or not the prime contractor is

supplying a commercial item.

(h) Prior compliance of the offeror with other such subcontracting plans under previous contracts will be considered by the Contracting Officer in determining the responsibility of the offeror for award of the contract.

(i) The failure of the Contractor or subcontractor to comply in good faith with—

(1) The clause of this contract entitled "Utilization Of Small Business Concerns;" or

(2) An approved plan required by this clause, shall be a material breach of the contract.

(j) The Contractor shall submit the following reports:

(1) *Standard Form 294, Subcontracting Report for Individual Contracts.* This report shall be submitted to the Contracting Officer semiannually and at contract completion. The report covers subcontract award data related to this contract. This report is not required for commercial plans.

(2) *Standard Form 295, Summary Subcontract Report.* This report encompasses all of the contracts with the awarding agency. It must be submitted semi-annually for contracts with the Department of Defense and annually for contracts with civilian agencies. If the reporting activity is covered by a commercial plan, the reporting activity must report annually all subcontract awards under that plan. All reports submitted at the close of each fiscal year (both individual and commercial plans) shall include a breakout, in the Contractor's format, of subcontract awards, in whole dollars, to small disadvantaged business concerns by North American Industry Classification System (NAICS) Industry Subsector. For a commercial plan, the Contractor may obtain from each of its subcontractors a predominant NAICS Industry Subsector and report all awards to that subcontractor under its predominant NAICS Industry Subsector.

(End of clause)

25. DFARS 252.219-7009 SECTION 8(a) DIRECT AWARD (MAR 2002) [<u>When Competitive 8(a) Contracting Procedures are used</u>]

(a) This contract is issued as a direct award between the contracting office and the 8(a) Contractor pursuant to the Partnership Agreement dated February 1, 2002, between the Small Business Administration (SBA) and the Department of Defense. Accordingly, the SBA, even if not identified in Section A of this contract, is the prime contractor and retains responsibility for 8(a) certification, for 8(a) eligibility determinations and related issues, and for providing counseling and assistance to the 8(a) Contractor under the 8(a) Program. The cognizant SBA district office is:

[To be completed by the Contracting Officer at the time of award]

(b) The contracting office is responsible for administering the contract and for taking any action on behalf of the Government under the terms and conditions of the contract; provided that the contracting office shall give advance notice to the SBA before it issues a final notice terminating performance, either in whole or in part, under the contract. The contracting office also shall coordinate with the SBA prior to processing any novation agreement. The contracting office may assign contract administration functions to a contract administration office.

(c) The 8(a) Contractor agrees that--

(1) It will notify the Contracting Officer, simultaneous with its notification to the SBA (as required by SBA's 8(a) regulations at 13 CFR 124.308), when the owner or owners upon whom 8(a) eligibility is based plan to relinquish ownership or control of the concern. Consistent with Section 407 of Pub. L. 100-656, transfer of

ownership or control shall result in termination of the contract for convenience, unless the SBA waives the requirement for termination prior to the actual relinquishing of ownership and control; and

(2) It will not subcontract the performance of any of the requirements of this contract without the prior written approval of the SBA and the Contracting Officer.

(End of clause)

26. *FAR 52.219-14 LIMITATIONS ON SUBCONTRACTING (DEC 1996) [For Small Business Set Aside Only]

(a) This clause does not apply to the unrestricted portion of a partial set-aside.

(b) By submission of an offer and execution of a contract, the Offeror/Contractor agrees that in performance of the contract in the case of a contract for--

(1) Services (except construction). At least 50 percent of the cost of contract performance incurred for personnel shall be expended for employees of the concern.

(2) Supplies (other than procurement from a nonmanufacturer of such supplies). The concern shall perform work for at least 50 percent of the cost of manufacturing the supplies, not including the cost of materials.

(3) General construction. The concern will perform at least 15 percent of the cost of the contract, not including the cost of materials, with its own employees.

(4) Construction by special trade contractors. The concern will perform at lest 25 percent of the cost of the contract, not including the cost of materials, with its own employees.

27. *FAR 52.219-16 LIQUIDATED DAMAGES-SUBCONTRACTING PLAN (JAN 1999)

(a) Failure to make a good faith effort to comply with the subcontracting plan, as used in this clause, means a willful or intentional failure to perform in accordance with the requirements of the subcontracting plan approved under the clause in this contract entitled ``Small Business Subcontracting Plan," or willful or intentional action to frustrate the plan.

(b) Performance shall be measured by applying the percentage goals to the total actual subcontracting dollars or, if a commercial plan is involved, to the pro rata share of actual subcontracting dollars attributable to Government contracts covered by the commercial plan., If, at contract completion, or in the case of a commercial plan, at the close of the fiscal year for which the plan is applicable, the Contractor has failed to meet its subcontracting goals and the Contracting Officer decides in accordance with paragraph (c) of this clause that the Contractor failed to make a good faith effort to comply with its subcontracting plan, established in accordance with the clause in this contract entitled ``Small Business Subcontracting Plan," the Contractor shall pay the Government liquidated damages in an amount stated. The amount of probable damages attributable to the Contractor's failure to comply shall be an amount equal to the actual dollar amount by which the Contractor failed to achieve each subcontract goal.

(c) Before the Contracting Officer makes a final decision that the Contractor has failed to make such good faith effort, the Contracting Officer shall give the Contractor written notice specifying the failure and permitting the Contractor to demonstrate what good faith efforts have been made and to discuss the matter. Failure to respond to the notice may be taken as an admission that no valid explanation exists. If, after consideration of all the pertinent data, the Contracting Officer finds that the Contractor failed to make a good faith effort to comply with the subcontracting plan, the Contracting Officer shall issue a final decision to that effect and require that the Contractor pay the Government liquidated damages as provided in paragraph (b) of this clause.

(d) With respect to commercial plans, the Contracting Officer who approved the plan will perform the functions of the Contracting Officer under this clause on behalf of all agencies with contracts covered by a commercial plan.

(e) The Contractor shall have the right of appeal, under the clause in this contract entitled, Disputes, from many final decision of the Contracting Officer.

(f) Liquidated damages shall be in addition to any other remedies that the Government may have.

28. DFARS 252.219-7010 ALTERNATE A (JUN 1998) [When Competitive 8(a) Contracting Procedures are used]

As prescribed in 219.811-3(2), substitute the following paragraph (c) for paragraph (c) of the clause at FAR 52.219-18:

(c) Any award resulting from this solicitation will be made directly by the Contracting Officer to the successful 8(a) offeror selected through the evaluation criteria set forth in this solicitation.

29. FAR 52.219-18 NOTIFICATION OF COMPETITION LIMITED TO ELIGIBLE 8(A) CONCERNS (JUNE 1999) [When Competitive 8(a) Contracting Procedures are used]

(a) Offers are solicited only from small business concerns expressly certified by the Small Business Administration (SBA) for participation in the SBA's 8(a) Program and which meet the following criteria at the time of submission of offer--

(1) The Offeror is in conformance with the 8(a) support limitation set forth in its approved business plan; and

(2) The Offeror is in conformance with the Business Activity Targets set forth in its approved business plan or any remedial action directed by the SBA.

(b) By submission of its offer, the Offeror represents that it meets all of the criteria set forth in paragraph (a) of this clause.

(c) Any award resulting from this solicitation will be made to the Small Business Administration, which will subcontract performance to the successful 8(a) offeror selected through the evaluation criteria set forth in this solicitation.

(d) (1) Agreement. A small business concern submitting an offer in its own name agrees to furnish, in performing the contract, only end items manufactured or produced by small business concerns in the United States. The term ``United States" includes its territories and possessions, the Commonwealth of Puerto Rico, the Trust Territory of the Pacific Islands, and the District of Columbia. If this procurement is processed under simplified acquisition procedures and the total amount of this contract does not exceed $25,000, a small business concern may furnish the product of any domestic firm. This subparagraph does not apply in connection with construction or service contracts.

(2) The . . . . . [insert name of SBA's contractor] will notify the U.S. Army Corps of Engineers Contracting Officer in writing immediately upon entering an agreement (either oral or written) to transfer all or part of its stock or other ownership interest to any other party.

(End of clause)

30. DFARS 252.219-7003 SMALL, SMALL DISADVANTAGED AND WOMEN-OWNED SMALL BUSINESS SUBCONTRACTING PLAN (DOD CONTRACTS) (APR 1996)

This clause supplements the Federal Acquisition Regulation 52.219-9, Small, Small Disadvantaged and Women-Owned Small Business Subcontracting Plan, clause of this contract.

(a) Definitions.

"Historically black colleges and universities," as used in this clause, means institutions determined by the Secretary of Education to meet the requirements of 34 CFR Section 608.2. The term also means any nonprofit research institution that was an integral part of such a college or university before November 14, 1986.

"Minority institutions," as used in this clause, means institutions meeting the requirements of Section 1046(3) of the Higher Education Act of 1965 (20 U.S.C. 1135d-5(3)). The term also includes Hispanic-serving institutions as defined in Section 316(b)(1) of such Act (20 U.S.C. 1059c(b)(1).

(b) Except for company or division-wide commercial products subcontracting plans, the term "small disadvantaged business," when used in the FAR 52.219-9 clause, includes historically black colleges and universities and minority institutions in addition to small disadvantaged business concerns.

(c) Work under the contract or its subcontracts shall be credited toward meeting the small disadvantaged business concern goal required by paragraph (d) of the FAR 52.219-9 clause when:

(1) It is performed on Indian lands or in joint venture with an Indian tribe or a tribally-owned corporation, and

(2) It meets the requirements of 10 U.S.C. 2323a.

(d) Subcontracts awarded to workshops approved by the Committee for Purchase from People Who are Blind or Severely Disabled (41 U.S.C. 46-48), may be counted toward the Contractor's small business subcontracting goal.

(e) A mentor firm, under the Pilot Mentor-Protege Program established under Section 831 of Pub. L. 101-510, as amended, may count toward its small disadvantaged business goal, subcontracts awarded--

(1) Protege firms which are qualified organizations employing the severely handicapped; and

(2) Former protege firms that meet the criteria in Section 831(g)(4) of Pub. L. 101-510.

(f) The master plan approval referred to in paragraph (f) of the FAR 52.219-9 clause is approval by the Contractor's cognizant contract administration activity.

(g) In those subcontracting plans which specifically identify small, small disadvantaged, and women-owned businesses, the Contractor shall notify the Administrative Contracting Officer of any substitutions of firms that are not small, small disadvantaged, or women-owned small businesses for the firms listed in the subcontracting plan. Notifications shall be in writing and shall occur within a reasonable period of time after award of the subcontract. Contractor-specified formats shall be acceptable.

31. DFARS 252.219-7004 SMALL, SMALL DISADVANTAGED AND WOMEN-OWNED SMALL BUSINESS SUBCONTRACTING PLAN (TEST PROGRAM) (JUN 1997)

(a) Definition. "Subcontract," as used in this clause, means any agreement (other than one involving an employer-employee relationship) entered into by a Federal Government prime Contractor or subcontractor calling for supplies or services required for performance of the contract or subcontract.

(b) The Offeror's comprehensive small business subcontracting plan and its successors, which are authorized by and approved under the test program of Section 834 of Pub. L. 101-189, shall be included in and made a part of the resultant contract. Upon expulsion from the test program or expiration of the test program, the Contractor shall negotiate an individual subcontracting plan for all future contracts that meet the requirements of Section 211 of Publ. L. 95-507.

(c) The Contractor shall submit Standard Form 295, Summary Subcontract Report, in accordance with the instructions on the form, except--

(1) One copy of SF 295 and attachments shall be submitted to Director, Small and Disadvantaged Business Utilization, Office of the Deputy Under Secretary of Defense (International and Commercial Programs), 3061 Defense Pentagon, Room 2A338, Washington, DC 20301-3061; and

(2) Item 14, Remarks, shall be completed to include semi-annual cumulative--

(1) Small business, small disadvantaged business and women-owned small business goals; and

(2) Small business and small disadvantaged business goals, actual accomplishments, and percentages for each of the two designated industry categories.

(d) The failure of the Contractor or subcontractor to comply in good faith with (1) the clause of this contract entitled "Utilization of Small, Small Disadvantaged and Women-Owned Small Business Concerns," or (2) an approved plan required by this clause, shall be a material breach of the contract.

32. *FAR 52.222-3 CONVICT LABOR (AUG 1996)

The Contractor agrees not to employ in the performance of this contract any person undergoing a sentence of imprisonment which has been imposed by any court of a State, the District of Columbia, the Commonwealth of Puerto Rico, the Virgin Islands, Guam, American Samoa, the Commonwealth of the Northern Mariana Islands, or the Trust Territory of the Pacific Islands. This limitation, however, shall not prohibit the employment by the Contractor in the performance of this contract of persons on parole or probation to work at paid employment during the term of their sentence or persons who have been pardoned or who have served their terms. Nor shall it prohibit the employment by the Contractor in the performance of this contract of persons confined for violation of the laws of any of the States, the District of Columbia, the Commonwealth of Puerto Rico, the Virgin Islands, Guam, American Samoa, the Commonwealth of the Northern Mariana Islands, or the Trust Territory of the Pacific Islands who are authorized to work at paid employment in the community under the laws of such jurisdiction, if--

(a) (1) The worker is paid or is in an approved work training program on a voluntary basis;

(2) Representatives of local union central bodies or similar labor union organizations have been consulted;

(3) Such paid employment will not result in the displacement of employed workers, or be applied in skills, crafts, or trades in which there is a surplus of available gainful labor in the locality, or impair existing contracts for services; and

(4) The rates of pay and other conditions of employment will not be less than those paid or provided for work of a similar nature in the locality in which the work is being performed; and

(b) The Attorney General of the United States has certified that the work-release laws or regulations of the jurisdiction involved are in conformity with the requirements of Executive Order 11755, as amended by Executive Orders 12608 and 12943.

33. *FAR 52.222-4 CONTRACT WORK HOURS AND SAFETY STANDARDS ACT—OVERTIME COMPENSATION (SEPT 2000)

(a) *Overtime requirements.* No Contractor or subcontractor employing laborers or mechanics (see Federal Acquisition Regulation 22.300) shall require or permit them to work over 40 hours in any workweek unless they are paid at least 1 and 1/2 times the basic rate of pay for each hour worked over 40 hours.

(b) *Violation; liability for unpaid wages; liquidated damages*. The responsible Contractor and subcontractor are liable for unpaid wages if they violate the terms in paragraph (a) of this clause. In addition, the Contractor and subcontractor are liable for liquidated damages payable to the Government. The Contracting Officer will assess liquidated damages at the rate of $10 per affected employee for each calendar day on which the employer required or permitted the employee to work in excess of the standard workweek of 40 hours without paying overtime wages required by the Contract Work Hours and Safety Standards Act.

(c) *Withholding for unpaid wages and liquidated damages*. The Contracting Officer will withhold from payments due under the contract sufficient funds required to satisfy any Contractor or subcontractor liabilities for unpaid wages and liquidated damages. If amounts withheld under the contract are insufficient to satisfy Contractor or subcontractor liabilities, the Contracting Officer will withhold payments from other Federal or Federally assisted contracts held by the same Contractor that are subject to the Contract Work Hours and Safety Standards Act.

(d) *Payrolls and basic records*. (1) The Contractor and its subcontractors shall maintain payrolls and basic payroll records for all laborers and mechanics working on the contract during the contract and shall make them available to the Government until 3 years after contract completion. The records shall contain the name and address of each employee, social security number, labor classifications, hourly rates of wages paid, daily and weekly number of hours worked, deductions made, and actual wages paid. The records need not duplicate those required for construction work by Department of Labor regulations at 29 CFR 5.5(a)(3) implementing the Davis-Bacon Act .

(2) The Contractor and its subcontractors shall allow authorized representatives of the Contracting Officer or the Department of Labor to inspect, copy, or transcribe records maintained under paragraph (d)(1) of this clause. The Contractor or subcontractor also shall allow authorized representatives of the Contracting Officer or Department of Labor to interview employees in the workplace during working hours.

(e) *Subcontracts*. The Contractor shall insert the provisions set forth in paragraphs (a) through (d) of this

clause in subcontracts exceeding $100,000 and require subcontractors to include these provisions in any lower-tier subcontracts. The Contractor shall be responsible for compliance by any subcontractor or lower-tier subcontractor with the provisions set forth in paragraphs (a) through (d) of this clause.
(End of clause)

34. *FAR 52.222-6 DAVIS-BACON ACT (FEB 1995)

(a) All laborers and mechanics employed or working upon the site of the work will be paid unconditionally and not less often than once a week, and without subsequent deduction or rebate on any account (except such payroll deductions as are permitted by regulations issued by the Secretary of Labor under the Copeland Act (29 CFR Part 3)), the full amount of wages and bona fide fringe benefits (or cash equivalents thereof) due at time of payment computed at rates not less than those contained in the wage determination of the Secretary of Labor which is attached hereto and made a part hereof, regardless of any contractual relationship which may be alleged to exist between the Contractor and such laborers and mechanics. Contributions made or costs reasonably anticipated for bona fide fringe benefits under section 1(b)(2) of the Davis-Bacon Act on behalf of laborers or mechanics are considered wages paid to such laborers or mechanics, subject to the provisions of paragraph (d) of this clause; also, regular contributions made or costs incurred for more than a weekly period (but not less often than quarterly) under plans, funds, or programs which cover the particular weekly period, are deemed to be constructively made or incurred during such period. Such laborers and mechanics shall be paid not less than the appropriate wage rate and fringe benefits in the wage determination for the classification of work actually performed, without regard to skill, except as provided in the clause entitled Apprentices and Trainees. Laborers or mechanics performing work in more than one classification may be compensated at the rate specified for each classification for the time actually worked therein; provided, that the employer's payroll records accurately set forth the time spent in each classification in which work is performed. The wage determination (including any additional classifications and wage rates conformed under paragraph (b) of this clause) and the Davis-Bacon poster (WH-1321) shall be posted at all times by the Contractor and its subcontractors at the site of the work in a prominent and accessible place where it can be easily seen by the workers.

(b) (1) The Contracting Officer shall require that any class of laborers or mechanics, which is not listed in the wage determination and which is to be employed under the contract shall be classified in conformance with the wage determination. The Contracting Officer shall approve an additional classification and wage rate and fringe benefits therefor only when all the following criteria have been met:

(i) The work to be performed by the classification requested is not performed by a classification in the wage determination.

(ii) The classification is utilized in the area by the construction industry.

(iii) The proposed wage rate, including any bona fide fringe benefits, bears a reasonable relationship to the wage rates contained in the wage determination.

(2) If the Contractor and laborers and mechanics to be employed in the classification (if known), or their representatives, and the Contracting Officer agree on the classification and wage rate (including the amount designated for fringe benefits, where appropriate), a report of the action taken shall be sent by the Contracting Officer to the Administrator of the Wage and Hour Division, Employment Standards Administration, U.S. Department of Labor, Washington, DC 20210. The Administrator or an authorized representative will approve, modify, or disapprove every additional classification action within 30 days of receipt and so advise the Contracting Officer or will notify the Contracting Officer within the 30-day period that additional time is necessary.

(3) In the event the Contractor, the laborers or mechanics to be employed in the classification, or their representatives, and the Contracting Officer do not agree on the proposed classification and wage rate (including the amount designated for fringe benefits, where appropriate), the Contracting Officer shall refer the questions, including the views of all interested parties and the recommendation of the Contracting Officer, to the Administrator of the Wage and Hour Division for determination. The Administrator, or an authorized representative, will issue a determination within 30 days of receipt and so advise the Contracting Officer or will notify the Contracting Officer within the 30-day period that additional time is necessary.

(4) The wage rate (including fringe benefits, where appropriate) determined pursuant to subparagraphs (b)(2) and (b)(3) of this clause shall be paid to all workers performing work in the classification under this contract from the first day on which work is performed in the classification.

(c) Whenever the minimum wage rate prescribed in the contract for a class of laborers or mechanics includes a fringe benefit which is not expressed as an hourly rate, the Contractor shall either pay the benefit as stated in the wage determination or shall pay another bona fide fringe benefit or an hourly cash equivalent thereof.

(d) If the Contractor does not make payments to a trustee or other third person, the Contractor may consider as part of the wages of any laborer or mechanic the amount of any costs reasonably anticipated in providing bona fide fringe benefits under a plan or program; provided, that the Secretary of Labor has found, upon the written request of the Contractor, that the applicable standards of the Davis-Bacon Act have been met. The Secretary of Labor may require the Contractor to set aside in a separate account assets for the meeting of obligations under the plan or program.

35. *FAR 52.222-7 WITHHOLDING OF FUNDS (FEB 1988)

The Contracting Officer shall, upon his or her own action or upon written request of an authorized representative of the Department of Labor, withhold or cause to be withheld from the Contractor under this contract or any other Federal contract with the same Prime Contractor, or any other Federally assisted contract subject to Davis-Bacon prevailing wage requirements, which is held by the same Prime Contractor, so much of the accrued payments or advances as may be considered necessary to pay laborers and mechanics, including apprentices, trainees, and helpers, employed by the Contractor or any subcontractor the full amount of wages required by the contract. In the event of failure to pay any laborer or mechanic, including any apprentice, trainee, or helper, employed or working on the site of the work, all or part of the wages required by the contract, the Contracting Officer may, after written notice to the Contractor, take such action as may be necessary to cause the suspension of any further payment, advance, or guarantee of funds until such violations have ceased.

36. *FAR 52.222-8 PAYROLLS AND BASIC RECORDS (FEB 1988)

(a) Payrolls and basic records relating thereto shall be maintained by the Contractor during the course of the work and preserved for a period of 3 years thereafter for all laborers and mechanics working at the site of the work. Such records shall contain the name, address, and social security number of each such worker, his or her correct classification, hourly rates of wages paid (including rates of contributions or costs anticipated for bona fide fringe benefits or cash equivalents thereof of the types described in section 1(b)(2)(B) of the Davis-Bacon Act), daily and weekly number of hours worked, deductions made, and actual wages paid. Whenever the Secretary of Labor has found, under paragraph (d) of the clause entitled Davis-Bacon Act, that the wages of any laborer or mechanic include the amount of any costs reasonably anticipated in providing benefits under a plan or program described in section 1(b)(2)(B) of the Davis-Bacon Act, the Contractor shall maintain records which show that the commitment to provide such benefits is enforceable, that the plan or program is financially responsible, and that the plan or program has been communicated in writing to the laborers or mechanics affected and records which show the costs anticipated or the actual cost incurred in providing such benefits. Contractors employing apprentices or trainees under approved programs shall maintain written evidence of the registration of apprenticeship programs and certification of trainee programs, the registration of apprentices and trainees, and the ratios and wage rates prescribed in the applicable programs.

(b) (1) The Contractor shall submit weekly for each week in which any contract work is performed a coy of all payrolls to the Contracting Officer. The payrolls submitted shall set out accurately and completely all of the information required to be maintained under paragraph (a) of this clause. This information may be submitted in any form desired. Optional Form WH-347 (Federal Stock Number 029-005-00014-1) is available for this purpose and may be purchased from the Superintendent of Documents, U.S. Government Printing Office, Washington, DC 20402. The Prime Contractor is responsible for the submission of copies of payrolls by all subcontractors.

(2) Each payroll submitted shall be accompanied by a "Statement of Compliance," signed by the Contractor or subcontractor or his or her agent who pays or supervises the payment of the persons employed under the contract and shall certify--

(i) That the payroll for the payroll period contains the information required to be maintained under paragraph (a) of this clause and that such information is correct and complete;

(ii) That each laborer or mechanic (including each helper, apprentice, and trainee) employed on the contract during the payroll period has been paid the full weekly wages earned, without rebate,

either directly or indirectly, and that no deductions have been made either directly or indirectly, and that no deductions have been made either directly or indirectly from the full wages earned, other than permissible deductions as set forth in the Regulations, 29 CFR Part 3; and

(iii) That each laborer or mechanic has been paid not less than the applicable wage rates and fringe benefits or cash equivalents for the classification of work performed, as specified in the applicable wage determination incorporated into the contract.

(3) The weekly submission of a properly executed certification set forth on the reverse side of Optional Form WH-347 shall satisfy the requirement for submission of the "Statement of Compliance" required by subparagraph (b)(2) of this clause.

(4) The falsification of any of the certifications in this clause may subject the Contractor or subcontractor to civil or criminal prosecution under Section 1001 of Title 18 and Section 3729 of Title 31 of the United States Code.

(c) The Contractor or subcontractor shall make the records required under paragraph (a) of this clause available for inspection, copying, or transcription by the Contracting Officer or authorized representatives of the Contracting Officer or the Department of Labor. The Contractor of subcontractor shall permit the Contracting Officer or representatives of the Contracting Officer or the Department of Labor to interview employees during working hours on the job. If the Contractor or subcontractor fails to submit required records or to make them available, the Contracting Officer may, after written notice to the Contractor, take such action as may be necessary to cause the suspension of any further payment. Furthermore, failure to submit the required records upon request or to make such records available may be grounds for debarment action pursuant to 29 CFR 5.12.

37. *FAR 52.222-9 APPRENTICES AND TRAINEES (FEB 1988)

(a) Apprentices. Apprentices will be permitted to work at less than the predetermined rate for the work they performed when they are employed pursuant to and individually registered in a bona fide apprenticeship program registered with the U.S. Department of Labor, Employment and Training Administration, Bureau of Apprenticeship and Training, or with a State Apprenticeship Agency recognized by the Bureau, or if a person is employed in his or her first 90 days of probationary employment as an apprentice in such an apprenticeship program, who is not individually registered in the program, but who has been certified by the Bureau of Apprenticeship and Training or a State Apprenticeship Agency (where appropriate) to be eligible for probationary employment as an apprentice. The allowable ratio of apprentices to journeymen on the job site in any craft classification shall not be greater than the ratio permitted to the Contractor as to the entire work force under the registered program. Any worker listed on a payroll at an apprentice wage rate, who is not registered or otherwise employed as stated in this paragraph, shall be paid not less than the applicable wage determination for the classification of work actually performed. In addition, any apprentice performing work on the job site in excess of the ratio permitted under the registered program shall be paid not less than the applicable wage rate on the wage determination for the work actually performed. Where a Contractor is performing construction on a project in a locality other than that in which its program is registered, the ratios and wage rates (expressed in percentages of the journeyman's hourly rate) specified in the Contractor's or subcontractor's registered program shall be observed. Every apprentice must be paid at not less than the rate specified in the registered program for the apprentice's level of progress, expressed as a percentage of the journeyman hourly rate specified in the applicable wage determination. Apprentices shall be paid fringe benefits in accordance with the provisions of the apprenticeship program. If the apprenticeship program does not specify fringe benefits, apprentices must be paid the full amount of fringe benefits listed on the wage determination for the applicable classification. If the Administrator determines that a different practice prevails for the applicable apprentice classification, fringes shall be paid in accordance with that determination. In the event the Bureau of Apprenticeship and Training, or a State Apprenticeship Agency recognized by the Bureau, withdraws approval of an apprenticeship program, the Contractor will not longer be permitted to utilize apprentices at less than the applicable predetermined rate for the work performed until an acceptable program is approved.

(b) Trainees. Except as provided in 29 CFR 5.16, trainees will not be permitted to work at less than the predetermined rate for the work performed unless they are employed pursuant to and individually registered in a program which has received prior approval, evidenced by formal certification by the U.S. Department of Labor, Employment and Training Administration. The ratio of trainees to journeymen on the job site shall not be greater

than permitted under the plan approved by the Employment and Training Administration. Every trainee must be paid at not less than the rate specified in the approved program for the trainee's level of progress, expressed as a percentage of the journeyman hourly rate specified in the applicable wage determination. Trainees shall be paid fringe benefits in accordance with the provisions of the trainee program. If the trainee program does not mention fringe benefits, trainees shall be paid the full amount of fringe benefits listed in the wage determination unless the Administrator of the Wage and Hour Division determines that there is an apprenticeship program associated with the corresponding journeyman wage rate in the wage determination which provides for less than full fringe benefits for apprentices. Any employee listed on the payroll at a trainee rate who is not registered and participating in a training plan approved by the Employment and Training Administration shall be paid not less than the applicable wage rate in the wage determination for the classification of work actually performed. In addition, any trainee performing work on the job site in excess of the ratio permitted under the registered program shall be paid not less than the applicable wage rate in the wage determination for the work actually performed. In the event the Employment and Training Administration withdraws approval of a training program, the Contractor will no longer be permitted to utilize trainees at less than the applicable predetermined rate for the work performed until an acceptable program is approved.

(c) Equal employment opportunity. The utilization of apprentices, trainees, and journeymen under this clause shall be inconformity with the equal employment opportunity requirements of Executive Order 11246, as amended, and 29 CFR Part 30.

38. *FAR 52.222-10 COMPLIANCE WITH COPELAND ACT REQUIREMENTS (FEB 1988)

The Contractor shall comply with the requirements of 29 CFR Part 3, which are hereby incorporated by reference in this contract.

39. *FAR 52.222-11 SUBCONTRACTS (LABOR STANDARDS) (FEB 1988)

(a) The Contractor or subcontractor shall insert in any subcontracts the clauses entitled Davis-Bacon Act, Contract Work Hours and Safety Standards Act--Overtime Compensation, Apprentices and Trainees, Payrolls and Basic Records, Compliance with Copeland Act Requirements, Withholding of Funds, Subcontracts (Labor Standards), Contract Termination--Debarment, Disputes Concerning Labor Standards, Compliance with Davis-Bacon and Related Act Regulations ,and Certification of Eligibility, and such other clauses as the Contracting Officer may, by appropriate instructions, require, and also a clause requiring subcontractors to include these clauses in any lower tier subcontracts. The Prime Contractor shall be responsible for compliance by any subcontractor or lower tier subcontractor with all the contract clauses cited in this paragraph.

(b) (1) Within 14 days after award of the contract, the Contractor shall deliver to the Contracting Officer a completed Statement and Acknowledgment Form (SF 1413) for each subcontract, including the subcontractor's signed and dated acknowledgment that the clauses set forth in paragraph (a) of this clause have been included in the subcontract.

(2) Within 14 days after the award of any subsequently awarded subcontract the Contractor shall deliver to the Contracting Officer an updated completed SF 1413 for such additional subcontract.

40. *FAR 52.222-12 CONTRACT TERMINATION--DEBARMENT (FEB 1988)

A breach of the contract clauses entitled Davis-Bacon Act, Contract Work Hours and Safety Standards Act--Overtime Compensation, Apprentices and Trainees, Payrolls and Basic Records, Compliance with Copeland Act Requirements, Subcontracts (Labor Standards), Compliance with Davis-Bacon and Related Act Regulations, or Certification of Eligibility may be grounds for termination of the contract, and for debarment as a Contractor and subcontractor as provided in 29 CFR 5.12.

41. *FAR 52.222-13 COMPLIANCE WITH DAVIS-BACON AND RELATED ACT REGULATIONS (FEB 1988)

All rulings and interpretations of the Davis-Bacon and Related Acts contained in 29 CFR Parts 1, 3, and 5 are hereby incorporated by reference in this contract.

42. *FAR 52.222-14 DISPUTES CONCERNING LABOR STANDARDS (FEB 1988)

The United States Department of Labor has set forth in 29 CFR Parts 5, 6, and 7 procedures for resolving disputes concerning labor standards requirements. Such disputes shall be resolved in accordance with those procedures and not the Disputes clause of this contract. Disputes within the meaning of this clause include disputes between the Contractor (or any of its subcontractors) and the contracting agency the U.S. Department of Labor, or the employees of their representatives.

43. *FAR 52.222-15 CERTIFICATION OF ELIGIBILITY (FEB 1988)

(a) By entering into this contract, the Contractor certifies that neither it (nor he or she) nor any person or firm who has an interest in the Contractor's firm is a person or firm ineligible to be awarded Government contracts by virtue of section 3(a) of the Davis-Bacon Act or 29 CFR 5.12(a)(1).

(b) No part of this contract shall be subcontracted to any person or firm ineligible for award of a Government contract by virtue of section 3(a) of the Davis-Bacon Act or 29 CFR 5.12(a)(1).

(c) The penalty for making false statements is prescribed in the U.S. Criminal Code, 18 U.S.C. 1001.

44. *FAR 52.222-26 EQUAL OPPORTUNITY (APR 2002)

(a) *Definition.* "United States," as used in this clause, means the 50 States, the District of Columbia, Puerto Rico, the Northern Mariana Islands, American Samoa, Guam, the U.S. Virgin Islands, and Wake Island.

(b) If, during any 12-month period (including the 12 months preceding the award of this contract), the Contractor has been or is awarded nonexempt Federal contracts and/or subcontracts that have an aggregate value in excess of $10,000, the Contractor shall comply with paragraphs (b)(1) through (b)(11) of this clause, except for work performed outside the United States by employees who were not recruited within the United States. Upon request, the Contractor shall provide information necessary to determine the applicability of this clause.

(1) The Contractor shall not discriminate against any employee or applicant for employment because of race, color, religion, sex, or national origin. However, it shall not be a violation of this clause for the Contractor to extend a publicly announced preference in employment to Indians living on or near an Indian reservation, in connection with employment opportunities on or near an Indian reservation, as permitted by 41 CFR 60-1.5.

(2) The Contractor shall take affirmative action to ensure that applicants are employed, and that employees are treated during employment, without regard to their race, color, religion, sex, or national origin. This shall include, but not be limited to—

(i) Employment;
(ii) Upgrading;
(iii) Demotion;
(iv) Transfer;
(v) Recruitment or recruitment advertising;
(vi) Layoff or termination;
(vii) Rates of pay or other forms of compensation; and
(viii) Selection for training, including apprenticeship.

(3) The Contractor shall post in conspicuous places available to employees and applicants for employment the notices to be provided by the Contracting Officer that explain this clause.

(4) The Contractor shall, in all solicitations or advertisements for employees placed by or on behalf of the Contractor, state that all qualified applicants will receive consideration for employment without regard to race, color, religion, sex, or national origin.

(5) The Contractor shall send, to each labor union or representative of workers with which it has a collective bargaining agreement or other contract or understanding, the notice to be provided by the Contracting Officer advising the labor union or workers' representative of the Contractor's commitments under this clause, and post copies of the notice in conspicuous places available to employees and applicants for employment.

(6) The Contractor shall comply with Executive Order 11246, as amended, and the rules, regulations, and orders of the Secretary of Labor.

(7) The Contractor shall furnish to the contracting agency all information required by Executive Order 11246, as amended, and by the rules, regulations, and orders of the Secretary of Labor. The Contractor shall also file Standard Form 100 (EEO-1), or any successor form, as prescribed in 41 CFR part 60-1. Unless the Contractor has filed within the 12 months preceding the date of contract award, the Contractor shall, within 30 days after contract award, apply to either the regional Office of Federal Contract Compliance Programs (OFCCP) or the local office of the Equal Employment Opportunity Commission for the necessary forms.

(8) The Contractor shall permit access to its premises, during normal business hours, by the contracting agency or the OFCCP for the purpose of conducting on-site compliance evaluations and complaint investigations. The Contractor shall permit the Government to inspect and copy any books, accounts, records (including computerized records), and other material that may be relevant to the matter under investigation and pertinent to compliance with Executive Order 11246, as amended, and rules and regulations that implement the Executive Order.

(9) If the OFCCP determines that the Contractor is not in compliance with this clause or any rule, regulation, or order of the Secretary of Labor, this contract may be canceled, terminated, or suspended in whole or in part and the Contractor may be declared ineligible for further Government contracts, under the procedures authorized in Executive Order 11246, as amended. In addition, sanctions may be imposed and remedies invoked against the Contractor as provided in Executive Order 11246, as amended; in the rules, regulations, and orders of the Secretary of Labor; or as otherwise provided by law.

(10) The Contractor shall include the terms and conditions of paragraphs (b)(1) through (11) of this clause in every subcontract or purchase order that is not exempted by the rules, regulations, or orders of the Secretary of Labor issued under Executive Order 11246, as amended, so that these terms and conditions will be binding upon each subcontractor or vendor.

(11) The Contractor shall take such action with respect to any subcontract or purchase order as the Contracting Officer may direct as a means of enforcing these terms and conditions, including sanctions for noncompliance, provided, that if the Contractor becomes involved in, or is threatened with, litigation with a subcontractor or vendor as a result of any direction, the Contractor may request the United States to enter into the litigation to protect the interests of the United States.

(c) Notwithstanding any other clause in this contract, disputes relative to this clause will be governed by the procedures in 41 CFR 60-1.1.

(End of clause)

45. *FAR 52.222-27 AFFIRMATIVE ACTION COMPLIANCE REQUIREMENTS FOR CONSTRUCTION (FEB 1999)

(a) Definitions.

"Covered area," as used in this clause, means the geographical area described in the solicitation for this contract.

"Deputy Assistant Secretary," as used in this clause, means the Deputy Assistant Secretary for Federal Contract Compliance, U.S. Department of Labor, or a designee

"Employer's identification number," as used in this clause, means the Federal Social Security number used on the employer's quarterly Federal tax return, U.S. Treasury Department Form 941.

"Minority," as used in this clause, means--

(1) American Indian or Alaskan Native (all persons having origins in any of the original peoples of North America and maintaining identifiable tribal affiliations through membership and participation or community identification).

(2) Asian and Pacific Islander (all persons having origins in any of the original peoples of the Far East, Southeast Asia, the Indian Subcontinent, or the Pacific Islands);

(3) Black (all persons having origins in any of the black African racial groups not of Hispanic origin); and

(4) Hispanic (all persons of Mexican, Puerto Rican, Cuban, Central or South American, or other Spanish culture or origin, regardless of race).

(b) If the Contractor, or a subcontractor at any tier, subcontracts a portion of the work involving any construction trade each such subcontract in excess of $10,000 shall include this clause and the Notice containing the goals for minority and female participation stated in the solicitation for this contract.

(c) If the Contractor is participating in a Hometown Plan (41 CFR 60-4) approved by the U.S. Department of Labor in a covered area, either individually or through an association, its affirmative actin obligations on all work in the plan area (including goals) shall comply with the plan for those trades that have unions participating in the plan. Contractors must be able to demonstrate participation in, and compliance with, the provisions of the plan. Each Contractor or subcontractor participating in an approved plan is also required to comply with its obligations under the Equal Opportunity clause, and to make a good faith effort to achieve each goal under the plan in each trade in which it has employees. The overall good-faith performance by other Contractors or subcontractors toward a goal in an approved plan does not excuse any Contractor's or subcontractor's failure to make good-faith efforts to achieve the plan's goals.

(d) The Contractor shall implement the affirmative action procedures in subparagraphs (g)(1) through (16) of this clause. The goals stated in the solicitation for this contract are expressed as percentages of the total hours of employment and training of minority and female utilization that the Contractor should reasonably be able to achieve in each construction trade in which it has employees in the covered area. If the Contractor performs construction work in a geographical area located outside of the covered area, it shall apply the goals established for the geographical area where that work is actually performed. The Contractor is expected to make substantially uniform progress toward its goals in each craft.

(e) Neither the terms and conditions of any collective bargaining agreement, nor the failure by a union with which the Contractor has a collective bargaining agreement, to refer minorities or women shall excuse the Contractor's obligations under this clause, Executive Order 11246, as amended, or the regulations thereunder.

(f) In order for the nonworking training hours of apprentices and trainees to be counted in meeting the goals, apprentices and trainees must be employed by the Contractor during the training period, and the Contractor must have made a commitment to employ the apprentices and trainees at the completion of their training, subject to the availability of employment opportunities. Trainees must be trained pursuant to training programs approved by the U.S. Department of Labor.

(g) The Contractor shall take affirmative action to ensure equal employment opportunity. The evaluation of the Contractor's compliance with this clause shall be based upon its effort to achieve maximum results from its actions. The Contractor shall document these efforts fully and implement affirmative action steps at least as extensive as the following:

(1) Ensure a working environment free of harassment, intimidation, and coercion at all sites and in all facilities where the Contractor's employees are assigned to work. The Contractor, if possible, will assign two or more women to each construction project. The Contractor shall ensure that foremen, superintendents, and other onsite supervisory personnel are aware of and carry out the Contractor's obligation to maintain such a working environment, with specific attention to minority or female individuals working at these sites or facilities.

(2) Establish and maintain a current list of sources for minority and female recruitment. Provide written notification to minority and female recruitment sources and community organizations when the Contractor or its unions have employment opportunities available, and maintain a record of the organizations' responses.

(3) Establish and maintain a current file of the names, addresses, and telephone numbers of each minority and female off-the-street applicant, referrals of minorities or females from unions, recruitment sources, or community organizations, and the action taken with respect to each individual. If an individual was sent to the union hiring hall for referral and not referred back to the Contractor by the union or, if referred back, not employed by the Contractor, this shall be documented in the file, along with whatever additional actions the Contractor may have taken.

(4) Immediately notify the Deputy Assistant Secretary when the union or unions with which the Contractor has a collective bargaining agreement has not referred back to the Contractor a minority or woman

sent by the Contractor, or when the Contractor has other information that the union referral process has impeded the Contractor's efforts to meet its obligations.

(5) Develop on-the-job training opportunities and/or participate in training programs for the area that expressly include minorities and women, including upgrading programs and apprenticeship and trainee programs relevant to the Contractor's employment needs, especially those programs funded or approved by the Department of Labor. The Contractor shall provide notice of these programs to the sources compiled under subparagraph (g)(2) of this clause.

(6) Disseminate the Contractor's equal employment policy by--

(i) Providing notice of the policy to unions and to training, recruitment, and outreach programs, and requesting their cooperation in assisting the Contractor in meeting its contract obligations;

(ii) Including the policy in any policy manual and in collective bargaining agreements;

(iii) Publicizing the policy in the company newspaper, annual report, etc.;

(iv) Reviewing the policy with all management personnel and with all minority and female employees at least once a year; and

(v) Posting the policy on bulletin boards accessible to employees at each location where construction work is performed.

(7) Review, at least annually, the Contractor's equal employment policy and affirmative action obligations with all employees having responsibility for hiring, assignment, layoff, termination, or other employment decisions. Conduct review of this policy with all on-site supervisory personnel before initiating construction work at a job site. A written record shall be made and maintained identifying the time and place of these meetings, persons attending, subject matter discussed, and disposition of the subject matter.

(8) Disseminate the Contractor's equal employment policy externally by including it in any advertising in the news media, specifically including minority and female news media. Provide written notification to, and discuss this policy with, other Contractors and subcontractors with which the Contractor does or anticipates doing business.

(9) Direct recruitment efforts, both oral and written, to minority, female, and community organizations, to schools with minority and female students, and to minority and female recruitment and training organizations serving the Contractor's recruitment area and employment needs. Not later than 1 month before the date for acceptance of applications for apprenticeship or training by any recruitment source, send written notification to organizations such as the above, describing the openings, screening procedures, and tests to be used in the selection process.

(10) Encourage present minority and female employees to recruit minority persons and women. Where reasonable, provide after-school, summer, and vacation employment to minority and female youth both on the site and in other areas of the Contractor's workforce.

(11) Validate all tests and other selection requirements where required under 41 CFR 60-3.

(12) Conduct, at least annually, an inventory and evaluation at least of all minority and female personnel for promotional opportunities. Encourage these employees to seek or to prepare for, through appropriate training, etc., opportunities for promotion.

(13) Ensure that seniority practices job classifications, work assignments, and other personnel practices do not have a discriminatory effect by continually monitoring all personnel and employment-related activities to ensure that the Contractor's obligations under this contract are being carried out.

(14) Ensure that all facilities and company activities are nonsegregated except that separate or single-user toilet and necessary changing facilities shall be provided to assure privacy between the sexes.

(15) Maintain a record of solicitations for subcontracts for minority and female construction contractors and suppliers, including circulation of solicitations to minority and female contractor associations and other business associations.

(16) Conduct a review, at lest annually, of all supervisors' adherence to and performance under the Contractor's equal employment policy and affirmative action obligations.

(h) The Contractor is encouraged to participate in voluntary associations that may assist in fulfilling one or more of the affirmative action obligations contained in subparagraphs (g)(1) through (16) of this clause. The efforts of a contractor association, joint contractor-union, contractor-community, or similar group of which the contractor is a member and participant may be asserted as fulfilling one or more of its obligations under subparagraphs (g)(1) through (16) of this clause, provided the Contractor--

(1) Actively participates in the group;

(2) Makes every effort to ensure that the group has a positive impact on the employment of minorities and women in the industry;

(3) Ensures that concrete benefits of the program are reflected in the Contractor's minority and female workforce participation;

(4) Makes a good-faith effort to meet its individual goals and timetables; and

(5) Can provide access to documentation that demonstrates the effectiveness of actions taken on behalf of the Contractor. The obligation to comply is the Contractor's, and failure of such a group to fulfill an obligation shall not be a defense for the Contractor's noncompliance.

(i) A single goal for minorities and a separate single goal for women shall be established. The Contractor is required to provide equal employment opportunity and to take affirmative action for all minority groups, both male and female, and all women, both minority and nonminority. Consequently, the Contractor may be in violation of Executive Order 11246, as amended, if a particular group is employed in a substantially disparate manner.

(j) The Contractor shall not use goals or affirmative action standards to discriminate against any person because of race, color, religion, sex, or national origin.

(k) The Contractor shall not enter into any subcontract with any person or firm debarred from Government contracts under Executive Order 11246, as amended.

(l) The Contractor shall carry out such sanctions and penalties for violation of this clause and of the Equal Opportunity clause, including suspension, termination, and cancellation of existing subcontracts, as may be imposed or ordered under Executive Order 11246, as amended, and its implementing regulations, by the OFCCP. Any failure to carry out these sanctions and penalties as ordered shall be a violation of this clause and Executive Order 11246, as amended.

(m) The Contractor in fulfilling its obligations under this clause shall implement affirmative action procedures at least as extensive as those prescribed in paragraph (g) of this clause, so as to achieve maximum results from its efforts to ensure equal employment opportunity. If the Contractor fails to comply with the requirements of Executive Order 11246, as amended, the implementing regulations, or this clause, the Deputy Assistant Secretary shall take action as prescribed in 41 CFR 60-4.8.

(n) The Contractor shall designate a responsible official to--

(1) Monitor all employment-related activity to ensure that the Contractor's equal employment policy is being carried out;

(2) Submit reports as may be required by the Government; and

(3) Keep records that shall at least include for each employee the name, address, telephone number, construction trade, union affiliation (if any), employee identification number, social security number, race, sex, status (e.g., mechanic, apprentice, trainee, helper, or laborer), dates of changes in status, hours worked per week in the indicated trade, rate of pay, and locations at which the work was performed. Records shall be maintained in an easily understandable and retrievable form; however, to the degree that existing records satisfy this requirement, separate records are not required to be maintained.

(o) Nothing contained herein shall be construed as a limitation upon the application of other laws that establish different standards of compliance or upon the requirements for the hiring of local or other area residents (e.g., those under the Public Works Employment Act of 1977 and the Community Development Block Grant Program).

46. *FAR 52.222-35 EQUAL OPPORTUNITY FOR SPECIAL DISABLED VETERANS, VETERANS OF THE VIETNAM ERA, AND OTHER ELIGIBLE VETERANS (DEC 2001)

(a) *Definitions.* As used in this clause—

"All employment openings" means all positions except executive and top management, those positions that will be filled from within the Contractor's organization, and positions lasting 3 days or less. This term includes full-time employment, temporary employment of more than 3 days duration, and part-time employment.

"Executive and top management" means any employee—

(1) Whose primary duty consists of the management of the enterprise in which the individual is employed or of a customarily recognized department or subdivision thereof;

(2) Who customarily and regularly directs the work of two or more other employees;

(3) Who has the authority to hire or fire other employees or whose suggestions and recommendations as to the hiring or firing and as to the advancement and promotion or any other change of status of other employees will be given particular weight;

(4) Who customarily and regularly exercises discretionary powers; and

(5) Who does not devote more than 20 percent or, in the case of an employee of a retail or service establishment, who does not devote more than 40 percent of total hours of work in the work week to activities that are not directly and closely related to the performance of the work described in paragraphs (1) through (4) of this definition. This paragraph (5) does not apply in the case of an employee who is in sole charge of an establishment or a physically separated branch establishment, or who owns at least a 20 percent interest in the enterprise in which the individual is employed.

"Other eligible veteran" means any other veteran who served on active duty during a war or in a campaign or expedition for which a campaign badge has been authorized.

"Positions that will be filled from within the Contractor's organization" means employment openings for which the Contractor will give no consideration to persons outside the Contractor's organization (including any affiliates, subsidiaries, and parent companies) and includes any openings the Contractor proposes to fill from regularly established "recall" lists. The exception does not apply to a particular opening once an employer decides to consider applicants outside of its organization.

"Qualified special disabled veteran" means a special disabled veteran who satisfies the requisite skill, experience, education, and other job-related requirements of the employment position such veteran holds or desires, and who, with or without reasonable accommodation, can perform the essential functions of such position.

"Special disabled veteran" means—

(1) A veteran who is entitled to compensation (or who but for the receipt of military retired pay would be entitled to compensation) under laws administered by the Department of Veterans Affairs for a disability—

(i) Rated at 30 percent or more; or

(ii) Rated at 10 or 20 percent in the case of a veteran who has been determined under 38 U.S.C. 3106 to have a serious employment handicap (*i.e.*, a significant impairment of the veteran's ability to prepare for, obtain, or retain employment consistent with the veteran's abilities, aptitudes, and interests); or

(2) A person who was discharged or released from active duty because of a service-connected disability.

"Veteran of the Vietnam era" means a person who—

(1) Served on active duty for a period of more than 180 days and was discharged or released from active duty with other than a dishonorable discharge, if any part of such active duty occurred—

(i) In the Republic of Vietnam between February 28, 1961, and May 7, 1975; or

(ii) Between August 5, 1964, and May 7, 1975, in all other cases; or

(2) Was discharged or released from active duty for a service-connected disability if any part of the active duty was performed—

(i) In the Republic of Vietnam between February 28, 1961, and May 7, 1975; or

(ii) Between August 5, 1964, and May 7, 1975, in all other cases.

(b) *General.* (1) The Contractor shall not discriminate against the individual because the individual is a special disabled veteran, a veteran of the Vietnam era, or other eligible veteran, regarding any position for which the employee or applicant for employment is qualified. The Contractor shall take affirmative action to employ, advance in employment, and otherwise treat qualified special disabled veterans, veterans of the Vietnam era, and other eligible veterans without discrimination based upon their disability or veterans' status in all employment practices such as—

(i) Recruitment, advertising, and job application procedures;

(ii) Hiring, upgrading, promotion, award of tenure, demotion, transfer, layoff, termination, right of return from layoff and rehiring;

(iii) Rate of pay or any other form of compensation and changes in compensation;

(iv) Job assignments, job classifications, organizational structures, position descriptions, lines of progression, and seniority lists;

(v) Leaves of absence, sick leave, or any other leave;

(vi) Fringe benefits available by virtue of employment, whether or not administered by

the Contractor;

(vii) Selection and financial support for training, including apprenticeship, and on-the-job training under 38 U.S.C. 3687, professional meetings, conferences, and other related activities, and selection for leaves of absence to pursue training;

(viii) Activities sponsored by the Contractor including social or recreational programs; and

(ix) Any other term, condition, or privilege of employment.

(2) The Contractor shall comply with the rules, regulations, and relevant orders of the Secretary of Labor issued under the Vietnam Era Veterans' Readjustment Assistance Act of 1972 (the Act), as amended (38 U.S.C. 4211 and 4212).

(c) *Listing openings*. (1) The Contractor shall immediately list all employment openings that exist at the time of the execution of this contract and those which occur during the performance of this contract, including those not generated by this contract, and including those occurring at an establishment of the Contractor other than the one where the contract is being performed, but excluding those of independently operated corporate affiliates, at an appropriate local public employment service office of the State wherein the opening occurs. Listing employment openings with the U.S. Department of Labor's America's Job Bank shall satisfy the requirement to list jobs with the local employment service office.

(2) The Contractor shall make the listing of employment openings with the local employment service office at least concurrently with using any other recruitment source or effort and shall involve the normal obligations of placing a bona fide job order, including accepting referrals of veterans and nonveterans. This listing of employment openings does not require hiring any particular job applicant or hiring from any particular group of job applicants and is not intended to relieve the Contractor from any requirements of Executive orders or regulations concerning nondiscrimination in employment.

(3) Whenever the Contractor becomes contractually bound to the listing terms of this clause, it shall advise the State public employment agency in each State where it has establishments of the name and location of each hiring location in the State. As long as the Contractor is contractually bound to these terms and has so advised the State agency, it need not advise the State agency of subsequent contracts. The Contractor may advise the State agency when it is no longer bound by this contract clause.

(d) *Applicability*. This clause does not apply to the listing of employment openings that occur and are filled outside the 50 States, the District of Columbia, the Commonwealth of Puerto Rico, the Commonwealth of the Northern Mariana Islands, American Samoa, Guam, the Virgin Islands of the United States, and Wake Island.

(e) *Postings*. (1) The Contractor shall post employment notices in conspicuous places that are available to employees and applicants for employment.

(2) The employment notices shall—

(i) State the rights of applicants and employees as well as the Contractor's obligation under the law to take affirmative action to employ and advance in employment qualified employees and applicants who are special disabled veterans, veterans of the Vietnam era, and other eligible veterans; and

(ii) Be in a form prescribed by the Deputy Assistant Secretary for Federal Contract Compliance Programs, Department of Labor (Deputy Assistant Secretary of Labor), and provided by or through the Contracting Officer.

(3) The Contractor shall ensure that applicants or employees who are special disabled veterans are informed of the contents of the notice (e.g., the Contractor may have the notice read to a visually disabled veteran, or may lower the posted notice so that it can be read by a person in a wheelchair).

(4) The Contractor shall notify each labor union or representative of workers with which it has a collective bargaining agreement, or other contract understanding, that the Contractor is bound by the terms of the Act and is committed to take affirmative action to employ, and advance in employment, qualified special disabled veterans, veterans of the Vietnam era, and other eligible veterans.

(f) *Noncompliance*. If the Contractor does not comply with the requirements of this clause, the Government may take appropriate actions under the rules, regulations, and relevant orders of the Secretary of Labor issued pursuant to the Act.

(g) *Subcontracts*. The Contractor shall insert the terms of this clause in all subcontracts or purchase orders of $25,000 or more unless exempted by rules, regulations, or orders of the Secretary of Labor. The Contractor shall act as specified by the Deputy Assistant Secretary of Labor to enforce the terms, including action for

noncompliance.
(End of clause)

47. *FAR 52.222-36 AFFIRMATIVE ACTION FOR WORKERS WITH DISABILITIES (JUN 1998)

(a) General.

(1) Regarding any position for which the employee or applicant for employment is qualified, the Contractor shall not discriminate against any employee or applicant because of physical or mental disability. The Contractor agrees to take affirmative action to employ, advance in employment, and otherwise treat qualified individuals with disabilities without discrimination based upon their physical or mental disability in all employment practices such as--

(i) Recruitment, advertising, and job application procedures;

(ii) Hiring, upgrading, promotion, award of tenure, demotion, transfer, layoff, termination, right of return from layoff, and rehiring;

(iii) Rates of pay or other forms of compensation and changes in compensation;

(iv) Job assignments, job classifications, orgizational structures, position descriptions, lines of progression, and senority lists;

(v) Leaves of absence, sick leave, or any other leave;

(vi) Fringe benefits available by virtue of employment, whether or not administered by the Contractor;

(vii) Selection and financial support for training, including apprenticeships, professional meetings, conferences, and other related activities, and selection for leaves of absence to pursue training;

(viii) Activities sponsored by the Contractor, including social or recreational programs; and

(ix) Any other term, condition, or priviledge of employment.

(2) The Contractor agrees to comply with the rules, regulations, and relevant orders of the Secretary of Labor (Secretary) issued under the Rehabilitation Act of 1973 (29 U.S.C. 793) (the Act), as amended.

(b) Postings.

(1) The Contractor agrees to post employment notices stating--

(i) The Contractor's obligation under the law to take affirmative action to employ and advance in employment qualified individuals with disabilities; and

(ii) The rights of applicants and employees.

(2) These notices shall be posted in conspicuous places that are available to employees and applicants for employment. The Contractor shall ensure that applicants and employees with disabilities are informed of the contents of the notice (e.g., the Contractor may have the notice read to visually disabled individual, or may lower the posted notice so that it might be read by a person in a wheelchair). The notices shall be in a form prescribed by the Deputy Assistant Secretary for Federal Contract Compliance of the U.S. Department of Labor (Deputy Assistant Secretary) and shall be provided by or through the Contracting Officer.

(3) The Contractor shall notify each labor union or representative of workers with which it has a collective bargaining agreement or other contract understanding, that the Contractor is bound by the terms of Section 503 of the Act and is committed to take affirmative action to employ, and advance in employment, qualified individuals with physical or mental disabilities.

(c) Noncompliance. If the Contractor does not comply with the requirements of this clause, appropriate actions may be taken under the rules, regulations, and relevant orders of the Secretary issued pursuant to the Act.

(d) Subcontracts. The Contractor shall include the terms of this clause in every subcontract or purchase order in excess of $10,000 unless exempted by rules, regulations, or orders of the Secretary. The Contractor shall act as specified by the Deputy Assistant Secretary to enforce the terms, including action for noncompliance.

48. *FAR 52.222-37 EMPLOYMENT REPORTS ON SPECIAL DISABLED VETERANS, VETERANS OF THE VIETNAM ERA, AND OTHER ELIGIBLE VETERANS (DEC 2001)

(a) Unless the Contractor is a State or local government agency, the Contractor shall report at least annually, as required by the Secretary of Labor, on—

(1) The number of special disabled veterans, the number of veterans of the Vietnam era, and other eligible veterans in the workforce of the Contractor by job category and hiring location; and

(2) The total number of new employees hired during the period covered by the report, and of the total, the number of special disabled veterans, the number of veterans of the Vietnam era, and the number of other eligible veterans; and

(3) The maximum number and the minimum number of employees of the Contractor during the period covered by the report.

(b) The Contractor shall report the above items by completing the Form VETS-100, entitled "Federal Contractor Veterans' Employment Report (VETS-100 Report)".

(c) The Contractor shall submit VETS-100 Reports no later than September 30 of each year beginning September 30, 1988.

(d) The employment activity report required by paragraph (a)(2) of this clause shall reflect total hires during the most recent 12-month period as of the ending date selected for the employment profile report required by paragraph (a)(1) of this clause. Contractors may select an ending date—

(1) As of the end of any pay period between July 1 andAugust 31 of the year the report is due; or

(2) As of December 31, if the Contractor has prior writtenapproval from the Equal Employment Opportunity Commission to do so for purposes of submitting the Employer Information Report EEO-1 (Standard Form 100).

(e) The Contractor shall base the count of veterans reported according to paragraph (a) of this clause on voluntary disclosure. Each Contractor subject to the reporting requirements at 38 U.S.C. 4212 shall invite all special disabled veterans, veterans of the Vietnam era, and other eligible veterans who wish to benefit under the affirmative action program at 38 U.S.C. 4212 to identify themselves to the Contractor. The invitation shall state that—

(1) The information is voluntarily provided;

(2) The information will be kept confidential;

(3) Disclosure or refusal to provide the information will not subject the applicant or employee to any adverse treatment; and

(4) The information will be used only in accordance with the regulations promulgated under 38 U.S.C. 4212.

(f) The Contractor shall insert the terms of this clause in all subcontracts or purchase orders of $25,000 or more unless exempted by rules, regulations, or orders of the Secretary of Labor.

(End of clause)

49. *FAR 52.222-38 COMPLIANCE WITH VETERANS' EMPLOYMENT REPORTING REQUIREMENTS (DEC 2001)

By submission of its offer, the offeror represents that, if it is subject to the reporting requirements of 38 U.S.C. 4212(d) (*i.e.*, if it has any contract containing Federal Acquisition Regulation clause 52.222-37, Employment Reports on Special Disabled Veterans, Veterans of the Vietnam Era, and Other Eligible Veterans), it has submitted the most recent VETS-100 Report required by that clause.

(End of provision)

50. *FAR 52.223-5 POLLUTION PREVENTION AND RIGHT-TO-KNOW INFORMATION (APR 1998) [<u>For Work on Federal Facilities</u>]

(a) Executive Order 12856 of August 3, 1993, requires Federal facilities to comply with the provisions of the Emergency Planning and Community Right-to-Know Act of 1986 (EPCRA) (42 U.S.C. 11001-11050) and the Pollution Prevention Act of 1990 (PPA) (42 U.S.C. 13101-13109).

(b) The Contractor shall provide all information needed by the Federal facility to comply with the emergency planning reporting requirements of Section 302 of EPCRA; the emergency notice requirements of Section 304 of EPCRA; the list of Material Safety Data Sheets required by Section 311 of EPCRA; the emergency and hazardous chemical inventory forms of Section 312 of EPCRA; the toxic chemical release inventory of Section 313 of EPCRA, which includes the reduction and recycling information required by Section 6607 of PPA; and the toxic chemical reduction goals requirements of Section 3-302 of Executive Order 12856.

51. *FAR 52.223-6 DRUG-FREE WORKPLACE (MAY 2001)

(a) Definitions. As used in this clause--

"Controlled substance" means a controlled substance in schedules I through V of section 202 of the Controlled Substances Act (21 U.S.C. 812) and as further defined in regulation at 21 CFR 1308.11 - 1308.15.

"Conviction" means a finding of guilt (including a plea of nolo contendere) or imposition of sentence, or both, by any judicial body charged with the responsibility to determine violations of the Federal or State criminal drug statutes.

"Criminal drug statute" means a Federal or non-Federal criminal statute involving the manufacture, distribution, dispensing, possession or use of any controlled substance.

"Drug-free workplace" means the site(s) for the performance of work done by the Contractor in connection with a specific contract where employees of the Contractor are prohibited from engaging in the unlawful manufacture, distribution, dispensing, possession, or use of a controlled substance.

"Employee" means an employee of a Contractor directly engaged in the performance of work under a Government contract. "Directly engaged" is defined to include all direct cost employees and any other Contractor employee who has other than a minimal impact or involvement in contract performance.

"Individual" means an offeror/contractor that has no more than one employee including the offeror/contractor.

(b) The Contractor, if other than an individual, shall--within 30 days after award (unless a longer period is agreed to in writing for contracts of 30 days or more performance duration), or as soon as possible for contracts of less than 30 days performance duration--

(1) Publish a statement notifying its employees that the unlawful manufacture, distribution, dispensing, possession, or use of a controlled substance is prohibited in the Contractor's workplace and specifying the actions that will be taken against employees for violations of such prohibition;

(2) Establish an ongoing drug-free awareness program to inform such employees about--

(i) The dangers of drug abuse in the workplace;

(ii) The Contractor's policy of maintaining a drug-free workplace;

(iii) Any available drug counseling, rehabilitation, and employee assistance programs; and

(iv) The penalties that may be imposed upon employees for drug abuse violations occurring in the workplace.

(3) Provide all employees engaged in performance of the contract with a copy of the statement required by subparagraph (b)(1) of this clause;

(4) Notify such employees in writing in the statement required by subparagraph (b)(1) of this clause that, as a condition of continued employment on this contract, the employee will--

(i) Abide by the terms of the statement; and

(ii) Notify the employer in writing of the employee's conviction under a criminal drug statute for a violation occurring in the workplace no later than 5 days after such conviction.

(5) Notify the Contracting Officer in writing within 10 days after receiving notice under subdivision (b)(4)(ii) of this clause, from an employee or otherwise receiving actual notice of such conviction. The notice shall include the position title of the employee;

(6) Within 30 days after receiving notice under subdivision (b)(4)(ii) of this clause of a conviction, take one of the following actions with respect to any employee who is convicted of a drug abuse violation occurring in the workplace:

(i) Taking appropriate personnel action against such employee, up to and including termination; or

(ii) Require such employee to satisfactorily participate in a drug abuse assistance or rehabilitation program approved for such purposes by a Federal, State, or local health, law enforcement, or other appropriate agency; and

(7) Make a good faith effort to maintain a drug-free workplace through implementation of subparagraphs (b)(1) through (b)(6) of this clause.

(c) The Contractor, if an individual, agrees by award of the contract or acceptance of a purchase order, not to engage in the unlawful manufacture, distribution, dispensing, possession, or use of a controlled substance while performing this contract.

(d) In addition to other remedies available to the Government, the Contractor's failure to comply with the requirements of paragraph (b) or (c) of this clause may, pursuant to FAR 23.560, render the Contractor subject to suspension of contract payments, termination of the contract for default, and suspension or debarment.

52. FAR 52.223-9 ESTIMATE OF PERCENTAGE OF RECOVERED MATERIAL CONTENT FOR EPA-DESIGNATED PRODUCTS (AUG 2000) [For Contracts exceeding $100,000. EPA Designated product (available at http://www.epa.gov/cpg/)]

(a) Definitions. As used in this clause—

"Postconsumer material" means a material or finished product that has served its intended use and has been discarded for disposal or recovery, having completed its life as a consumer item. Postconsumer material is a part of the broader category of "recovered material."

"Recovered material" means waste materials and by-products recovered or diverted from solid waste, but the term does not include those materials and by-products generated from, and commonly reused within, an original manufacturing process.

(b) The Contractor, on completion of this contract, shall—

(1) Estimate the percentage of the total recovered material used in contract performance, including, if applicable, the percentage of postconsumer material content; and

(2) Submit this estimate to the Contracting Officer.

(End of clause)

53. *FAR 52.223-14 TOXIC CHEMICAL RELEASE REPORTING (OCT 2000) [For Contracts Over $100,000]

(a) Unless otherwise exempt, the Contractor, as owner or operator of a facility used in the performance of this contract, shall file by July 1 for the prior calendar year an annual Toxic Chemical Release Inventory Form (Form R) as described in sections 313(a) and (g) of the Emergency Planning and Community Right-to-Know Act of 1986 (EPCRA) (42 U.S.C. 11023(a) and (g)), and section 6607 of the Pollution Prevention Act of 1990 (PPA) (42 U.S.C. 13106). The Contractor shall file, for each facility subject to the Form R filing and reporting requirements, the annual Form R throughout the life of the contract.

(b) A Contractor owned or operated facility use in the performance of this contract is exempt from the requirement to file an annual Form R if--

(1) The facility does not manufacture, process or otherwise use any toxic chemicals listed under section 313(c) of EPCRA, 42 U.S.C. 11023(c);

(2) The facility does not have 10 or more full-time employees as specified in section 313(b)(1)(A) of EPCRA, 42 U.S.C. 11023(b)(1)(A);

(3) The facility does not meet the reporting thresholds of toxic chemicals established under section 313(f) of EPCRA, 42 U.S.C. 11023(f) (including the alternate thresholds at 40 CFR 372.27, provided an appropriate certification form has been filed with EPA);

(4) The facility does not fall within Standard Industrial Classification Code (SIC) major groups 20 through 39 or their corresponding North American Industry Classification System (NAICS) sectors 31 through 33; or

(5) The facility is not located within any State of the United States, the District of Columbia, the Commonwealth of Puerto Rica, Guam, American Samoa, the United States Virgin Islands, the Norther Mariana Islands, or any other territory or possession over which the United States has jurisdiction.

(c) If the Contractor has certified to an exemption in accordance with one or more of the criteria in paragraph (b) of this clause, and after award of the contract circumstances change so that any one of its owned or operated facilities used in the performance of this contract is no longer exempt-

(1) The Contractor shall notify the Contracting Officer;

and

(2) The Contractor, as owner or operator of a facility used in the performance of this contract is no longer exempt, shall (i) submit a Toxic Chemical Release Inventory Form (Form R) on or before July 1 for the prior calendar year during which the facility becomes eligible; and (ii) continue to file the annual Form R for the life of the contract for such facility.

(d) The Contracting Officer may terminate this contract or take other action as appropriate, if the Contractor fails to comply accurately and fully with the EPCRA and PPA toxic chemical release filing and reporting requirements.

(e) Except for acquisitions of commercial items, as defined in FAR Part 2, the Contractor shall-

(1) For competitive subcontracts expected to exceed $100,000 (including all options), include a solicitation provision substantially the same as the provision at FAR 52.223-13, Certification of Toxic Chemical Release Reporting; and

(2) Include in any resultant subcontract exceeding $100,000 (including all options), the substance of this clause, except this paragraph (e).

54. RESERVED

55. DFARS 252.223-7006 PROHIBITION ON STORAGE AND DISPOSAL OF TOXIC AND HAZARDOUS MATERIALS (APR 1993)

(a) Definitions. As used in this clause--

(1) "Storage" means a non-transitory, semi-permanent or permanent holding, placement, or leaving of material. It does not include a temporary accumulation of a limited quantity of a material used in or a waste generated or resulting from authorized activities, such as servicing, maintenance, or repair of Department of Defense (DoD) items, equipment, or facilities.

(2) "Toxic or hazardous materials" means:

(i) Materials referred to in section 101(14) of the Comprehensive Environmental Response, Compensation, and Liability Act (CERCLA) of 1980 (42 U.S.C. 9601(14)) and materials designated under section 102 of CERCLA (42 U.S.C. 9602) (40 CFR Part 302);

(ii) Materials that are of an explosive, flammable, or pyrotechnic nature; or

(iii) Materials otherwise identified by the Secretary of Defense as specified in DoD regulations.

(b) In accordance with 10 U.S.C. 2692, the Contractor is prohibited from storing or disposing of non-DoD-owned toxic or hazardous materials on a DoD installation, except to the extent authorized by a statutory exception to 10 U.S.C. 2692 or as authorized by the Secretary of Defense or his designee.

56. *FAR 52.225-9 BUY AMERICAN ACT—CONSTRUCTION MATERIALS (MAY 2002) (<u>For Contracts less than $6.806 million</u>)

(a) *Definitions.* As used in this clause—

"Component" means an article, material, or supply incorporated directly into a construction material.

"Construction material" means an article, material, or supply brought to the construction site by the Contractor or a subcontractor for incorporation into the building or work. The term also includes an item brought to the site preassembled from articles, materials, or supplies. However, emergency life safety systems, such as emergency lighting, fire alarm, and audio evacuation systems, that are discrete systems incorporated into a public building or work and that are produced as complete systems, are evaluated as a single and distinct construction material regardless of when or how the individual parts or components of those systems are delivered to the construction site. Materials purchased directly by the Government are supplies, not construction material.

"Cost of components" means—

(1) For components purchased by the Contractor, the acquisition cost, including transportation costs to the place of incorporation into the construction material (whether or not such costs are paid to a domestic firm), and any applicable duty (whether or not a duty-free entry certificate is issued); or

(2) For components manufactured by the Contractor, all costs associated with the manufacture of the component, including transportation costs as described in paragraph (1) of this definition, plus allocable overhead costs, but excluding profit. Cost of components does not include any costs associated with the manufacture of the end product.

"Domestic construction material" means—

(1) An unmanufactured construction material mined or produced in the United States; or

(2) A construction material manufactured in the United States, if the cost of its components mined, produced, or manufactured in the United States exceeds 50 percent of the cost of all its components. Components of foreign origin of the same class or kind for which nonavailability determinations have been made are treated as domestic.

"Foreign construction material" means a construction material other than a domestic construction material.

"United States" means the 50 States and the District of Columbia, U.S. territories and possessions, Puerto Rico, the Northern Mariana Islands, and any other place subject to U.S. jurisdiction, but does not include leased bases.

(b) *Domestic preference.* (1) This clause implements the Buy American Act (41 U.S.C. 10a - 10d) by providing a preference for domestic construction material. The Contractor shall use only domestic construction material in performing this contract, except as provided in paragraphs (b)(2) and (b)(3) of this clause.

(2) This requirement does not apply to the construction material or components listed by the Government as follows:

_____

[*Contracting Officer to list applicable excepted materials or indicate "none"*]

(3) The Contracting Officer may add other foreign construction material to the list in paragraph (b)(2) of this clause if the Government determines that—

(i) The cost of domestic construction material would be unreasonable. The cost of a particular domestic construction material subject to the requirements of the Buy American Act is unreasonable when the cost of such material exceeds the cost of foreign material by more than 6 percent;

(ii) The application of the restriction of the Buy American Act to a particular construction material would be impracticable or inconsistent with the public interest; or

(iii) The construction material is not mined, produced, or manufactured in the United States in sufficient and reasonably available commercial quantities of a satisfactory quality.

(c) *Request for determination of inapplicability of the BuyAmerican Act*. (1)(i) Any Contractor request to

use foreign construction material in accordance with paragraph (b)(3) of this clause shall include adequate information for Government evaluation of the request, including—

(A) A description of the foreign and domestic construction materials;
(B) Unit of measure;
(C) Quantity;
(D) Price;
(E) Time of delivery or availability;
(F) Location of the construction project;
(G) Name and address of the proposed supplier; and
(H) A detailed justification of the reason for use of foreign construction materials cited in accordance with paragraph (b)(3) of this clause.

(ii) A request based on unreasonable cost shall include a reasonable survey of the market and a completed price comparison table in the format in paragraph (d) of this clause.

(iii) The price of construction material shall include all delivery costs to the construction site and any applicable duty (whether or not a duty-free certificate may be issued).

(iv) Any Contractor request for a determination submitted after contract award shall explain why the Contractor could not reasonably foresee the need for such determination and could not have requested the determination before contract award. If the Contractor does not submit a satisfactory explanation, the Contracting Officer need not make a determination.

(2) If the Government determines after contract award that an exception to the Buy American Act applies and the Contracting Officer and the Contractor negotiate adequate consideration, the Contracting Officer will modify the contract to allow use of the foreign construction material. However, when the basis for the exception is the unreasonable price of a domestic construction material, adequate consideration is not less than the differential established in paragraph (b)(3)(i) of this clause.

(3) Unless the Government determines that an exception to the Buy American Act applies, use of foreign construction material is noncompliant with the Buy American Act.

(d) *Data.* To permit evaluation of requests under paragraph (c) of this clause based on unreasonable cost, the Contractor shall include the following information and any applicable supporting data based on the survey of suppliers:

FOREIGN AND DOMESTIC CONSTRUCTION MATERIALS PRICE COMPARISON			
Construction Material Description	Unit of Measure	Quantity	Price (Dollars)*
Item 1:			
Foreign construction material	_____	_____	_____
Domestic construction material	_____	_____	_____
Item 2:			
Foreign construction material	_____	_____	_____
Domestic construction material	_____	_____	_____

[List *name, address, telephone number, and contact for suppliers surveyed. Attach copy of response; if oral, attach summary.]*
[Include other applicable supporting information.]
[Include all delivery costs to the construction site and any applicable duty (whether or not a duty-free entry certificate is issued).]*

57. *FAR 52.225-10 NOTICE OF BUY AMERICAN ACT REQUIREMENT—CONSTRUCTION MATERIALS (MAY 2002) (Applicable with FAR 52.225-9)

(a) *Definitions.* "Construction material," "domestic construction material," and "foreign construction material," as used in this provision, are defined in the clause of this solicitation entitled "Buy American Act—Construction Materials" (Federal Acquisition Regulation (FAR) clause 52.225-9).

(b) *Requests for determinations of inapplicability.* An offeror requesting a determination regarding the

inapplicability of the Buy American Act should submit the request to the Contracting Officer in time to allow a determination before submission of offers. The offeror shall include the information and applicable supporting data required by paragraphs (c) and (d) of the clause at FAR 52.225-9 in the request. If an offeror has not requested a determination regarding the inapplicability of the Buy American Act before submitting its offer, or has not received a response to a previous request, the offeror shall include the information and supporting data in the offer.

(c) *Evaluation of offers*. (1) The Government will evaluate an offer requesting exception to the requirements of the Buy American Act, based on claimed unreasonable cost of domestic construction material, by adding to the offered price the appropriate percentage of the cost of such foreign construction material, as specified in paragraph (b)(3)(i) of the clause at FAR 52.225-9.

(2) If evaluation results in a tie between an offeror that requested the substitution of foreign construction material based on unreasonable cost and an offeror that did not request an exception, the Contracting Officer will award to the offeror that did not request an exception based on unreasonable cost.

(d) *Alternate offers*. (1) When an offer includes foreign construction material not listed by the Government in this solicitation in paragraph (b)(2) of the clause at FAR 52.225-9, the offeror also may submit an alternate offer based on use of equivalent domestic construction material.

(2) If an alternate offer is submitted, the offeror shall submit a separate Standard Form 1442 for the alternate offer, and a separate price comparison table prepared in accordance with paragraphs (c) and (d) of the clause at FAR 52.225-9 for the offer that is based on the use of any foreign construction material for which the Government has not yet determined an exception applies.

(3) If the Government determines that a particular exception requested in accordance with paragraph (c) of the clause at FAR 52.225-9 does not apply, the Government will evaluate only those offers based on use of the equivalent domestic construction material, and the offeror shall be required to furnish such domestic construction material. An offer based on use of the foreign construction material for which an exception was requested—

(i) Will be rejected as nonresponsive if this acquisition is conducted by sealed bidding; or

(ii) May be accepted if revised during negotiations.

(End of provision)

58. *FAR 52.225-11 BUY AMERICAN ACT—CONSTRUCTION MATERIALS UNDER TRADE AGREEMENTS (MAY 2002) [For Contracts more than $6,806,000] ALTERNATE I (MAY 2002) [For Contracts between $6.806 and 7.068419 Million]

(a) *Definitions.* As used in this clause—

"Component" means an article, material, or supply incorporated directly into a construction material.

"Construction material" means an article, material, or supply brought to the construction site by the Contractor or subcontractor for incorporation into the building or work. The term also includes an item brought to the site preassembled from articles, materials, or supplies. However, emergency life safety systems, such as emergency lighting, fire alarm, and audio evacuation systems, that are discrete systems incorporated into a public building or work and that are produced as complete systems, are evaluated as a single and distinct construction material regardless of when or how the individual parts or components of those systems are delivered to the construction site. Materials purchased directly by the Government are supplies, not construction material.

"Cost of components" means—

(1) For components purchased by the Contractor, the acquisition cost, including transportation costs to the place of incorporation into the construction material (whether or not such costs are paid to a domestic firm), and any applicable duty (whether or not a duty-free entry certificate is issued); or

(2) For componentsmanufactured by the Contractor, all costs associated with the manufacture of the component, including transportation costs as described in paragraph (1) of this definition, plus allocable overhead costs, but excluding profit. Cost of components does not include any costs associated with the manufacture of the end product.

"Designated country" means any of the following countries:

Aruba	Kiribati
Austria	Korea, Republic of

Bangladesh	Lesotho
Belgium	Liechtenstein
Benin	Luxembourg
Bhutan	Malawi
Botswana	Maldives
Burkina Faso	Mali
Burundi	Mozambique
Canada	Nepal
Cape Verde	Netherlands
Central African Republic	Niger
Chad	Norway
Comoros	Portugal
Denmark	Rwanda
Djibouti	Sao Tome and Principe
Equatorial Guinea	Sierra Leone
Finland	Singapore
France	Somalia
Gambia	Spain
Germany	Sweden
Greece	Switzerland
Guinea	Tanzania U.R.
Guinea-Bissau	Togo
Haiti	Tuvalu
Hong Kong	Uganda
Iceland	United Kingdom
Ireland	Vanuatu
Israel	Western Samoa
Italy	Yemen
Japan	

"Designated country construction material" means a construction material that—

(1) Is wholly the growth, product, or manufacture of a designated country; or

(2) In the case of a construction material that consists in whole or in part of materials from another country, has been substantially transformed in a designated country into a new and different construction material distinct from the materials from which it was transformed.

"Domestic construction material" means—

(1) An unmanufactured construction material mined or produced in the United States; or

(2) A construction material manufactured in the United States, if the cost of its components mined, produced, or manufactured in the United States exceeds 50 percent of the cost of all its components. Components of foreign origin of the same class or kind for which nonavailability determinations have been made are treated as domestic.

"Foreign construction material" means a construction material other than a domestic construction material.

"North American Free Trade Agreement country" means Canada or Mexico.

"North American Free Trade Agreement country construction material" means a construction material that—

(1) Is wholly the growth, product, or manufacture of a North American Free Trade Agreement (NAFTA) country; or

(2) In the case of a construction material that consists in whole or in part of materials from another country, has been substantially transformed in a NAFTA country into a new and different construction material distinct from the materials from which it was transformed.

"United States" means the 50 States and the District of Columbia, U.S. territories and possessions, Puerto Rico, the Northern Mariana Islands, and any other place subject to U.S. jurisdiction, but does not include leased bases.

(b) *Construction materials.* (1) This clause implements the Buy American Act (41 U.S.C. 10a - 10d) by

providing a preference for domestic construction material. In addition, the Contracting Officer has determined that the Trade Agreements Act and the North American Free Trade Agreement (NAFTA) apply to this acquisition. Therefore, the Buy American Act and Balance of Payments Program restrictions are waived for designated country and NAFTA country construction materials.

(2) The Contractor shall use only domestic, designated country, or NAFTA country construction material in performing this contract, except as provided in paragraphs (b)(3) and (b)(4) of this clause.

(3) The requirement in paragraph (b)(2) of this clause does not apply to the construction materials or components listed by the Government as follows:

_____

[*Contracting Officer to list applicable excepted materials or indicate "none"*]

(4) The Contracting Officer may add other foreign construction material to the list in paragraph (b)(3) of this clause if the Government determines that—

(i) The cost of domestic construction material would be unreasonable. The cost of a particular domestic construction material subject to the restrictions of the Buy American Act is unreasonable when the cost of such material exceeds the cost of foreign material by more than 6 percent;

(ii) The application of the restriction of the Buy American Act to a particular construction material would be impracticable or inconsistent with the public interest; or

(iii) The construction material is not mined, produced, or manufactured in the United States in sufficient and reasonably available commercial quantities of a satisfactory quality.

(c) *Request for determination of inapplicability of the Buy American Act*. (1)(i) Any Contractor request to use foreign construction material in accordance with paragraph (b)(4) of this clause shall include adequate information for Government evaluation of the request, including—

(A) A description of the foreign and domestic construction materials;

(B) Unit of measure;

(C) Quantity;

(D) Price;

(E) Time of delivery or availability;

(F) Location of the construction project;

(G) Name and address of the proposed supplier; and

(H) A detailed justification of the reason for use of foreign construction materials cited in accordance with paragraph (b)(3) of this clause.

(ii) A request based on unreasonable cost shall include a reasonable survey of the market and a completed price comparison table in the format in paragraph (d) of this clause.

(iii) The price of construction material shall include all delivery costs to the construction site and any applicable duty (whether or not a duty-free certificate may be issued).

(iv) Any Contractor request for a determination submitted after contract award shall explain why the Contractor could not reasonably foresee the need for such determination and could not have requested the determination before contract award. If the Contractor does not submit a satisfactory explanation, the Contracting Officer need not make a determination.

(2) If the Government determines after contract award that an exception to the Buy American Act applies and the Contracting Officer and the Contractor negotiate adequate consideration, the Contracting Officer will modify the contract to allow use of the foreign construction material. However, when the basis for the exception is the unreasonable price of a domestic construction material, adequate consideration is not less than the differential established in paragraph (b)(4)(i) of this clause.

(3) Unless the Government determines that an exception to the Buy American Act applies, use of foreign construction material is noncompliant with the Buy American Act.

(d) *Data*. To permit evaluation of requests under paragraph (c) of this clause based on unreasonable cost, the Contractor shall include the following information and any applicable supporting data based on the survey of suppliers:

FOREIGN AND DOMESTIC CONSTRUCTION MATERIALS PRICE COMPARISON			
Construction Material Description	Unit of Measure	Quantity	Price (Dollars)*
Item 1:			
Foreign construction material	_____	_____	_____
Domestic construction material	_____	_____	_____
Item 2:			
Foreign construction material	_____	_____	_____
Domestic construction material	_____	_____	_____

[List *name, address, telephone number, and contact for suppliers surveyed. Attach copy of response; if oral, attach summary.]*
[Include other applicable supporting information.]
[Include all delivery costs to the construction site and any applicable duty (whether or not a duty-free entry certificate is issued).]*

(End of clause)

Alternate I (May 2002). As prescribed in 25.1102(c)(3), delete the definitions of "North American Free Trade Agreement country" and "North American Free Trade Agreement country construction material" from the definitions in paragraph (a) of the basic clause and substitute the following paragraphs (b)(1) and (b)(2) for paragraphs (b)(1) and (b)(2) of the basic clause:

(b) *Construction materials.* (1) This clause implements the Buy American Act (41 U.S.C. 10a - 10d) by providing a preference for domestic construction material. In addition, the Contracting Officer has determined that the Trade Agreements Act applies to this acquisition. Therefore, the Buy American Act restrictions are waived for designated country construction materials.

(2) The Contractor shall use only domestic or designated country construction material in performing this contract, except as provided in paragraphs (b)(3) and (b)(4) of this clause.

59. *FAR 52.225-12 NOTICE OF BUY AMERICAN ACT REQUIREMENT—CONSTRUCTION MATERIALS UNDER TRADE AGREEMENTS (MAY 2002) [Applicable with FAR 52.225-11] ALTERNATE II (MAY 2002) [For Contracts Between 6.806 and 7.068419 Million]

(a) *Definitions.* "Construction material," "designated country construction material," "domestic construction material," "foreign construction material," and "NAFTA country construction material," as used in this provision, are defined in the clause of this solicitation entitled "Buy American Act—Construction Materials under Trade Agreements" (Federal Acquisition Regulation (FAR) clause 52.225-11).

(b) *Requests for determination of inapplicability.* An offeror requesting a determination regarding the inapplicability of the Buy American Act should submit the request to the Contracting Officer in time to allow a determination before submission of offers. The offeror shall include the information and applicable supporting data required by paragraphs (c) and (d) of FAR clause 52.225-11 in the request. If an offeror has not requested a determination regarding the inapplicability of the Buy American Act before submitting its offer, or has not received a response to a previous request, the offeror shall include the information and supporting data in the offer.

(c) *Evaluation of offers.* (1) The Government will evaluate an offer requesting exception to the requirements of the Buy American Act, based on claimed unreasonable cost of domestic construction materials, by adding to the offered price the appropriate percentage of the cost of such foreign construction material, as specified in paragraph (b)(4)(i) of FAR clause 52.225-11.

(2) If evaluation results in a tie between an offeror that requested the substitution of foreign construction material based on unreasonable cost and an offeror that did not request an exception, the Contracting Officer will award to the offeror that did not request an exception based on unreasonable cost.

(d) *Alternate offers.* (1) When an offer includes foreign construction material, other than designated country or NAFTA country construction material, that is not listed by the Government in this solicitation in paragraph (b)(3) of FAR clause 52.225-11, the offeror also may submit an alternate offer based on use of equivalent domestic,

designated country, or NAFTA country construction material.

(2) If an alternate offer is submitted, the offeror shall submit a separate Standard Form 1442 for the alternate offer, and a separate price comparison table prepared in accordance with paragraphs (c) and (d) of FAR clause 52.225-11 for the offer that is based on the use of any foreign construction material for which the Government has not yet determined an exception applies.

(3) If the Government determines that a particular exception requested in accordance with paragraph (c) of FAR clause 52.225-11 does not apply, the Government will evaluate only those offers based on use of the equivalent domestic, designated country, or NAFTA country construction material, and the offeror shall be required to furnish such domestic, designated country, or NAFTA country construction material. An offer based on use of the foreign construction material for which an exception was requested—

(i) Will be rejected as nonresponsive if this acquisition is conducted by sealed bidding; or

(ii) May be accepted if revised during negotiations.

(End of provision)

ALTERNATE II (MAY 2002) **[For Contracts between 6.806 and 7.068419 Million]**
As prescribed in 25.1102(d)(3), substitute the following paragraphs (a) and (d) for paragraphs (a) and (d) of the basic provision:

(a) *Definitions.* "Construction material," "designated country construction material," "domestic construction material," and "foreign construction material," as used in this provision, are defined in the clause of this solicitation entitled "Buy American Act—Construction Materials under Trade Agreements" (Federal Acquisition Regulation (FAR) clause 52.225-11).

(d) *Alternate offers.* (1) When an offer includes foreign construction material, other than designated country construction material, that is not listed by the Government in this solicitation in paragraph (b)(3) of FAR clause 52.225-11, the offeror also may submit an alternate offer based on use of equivalent domestic or designated country construction material.

(2) If an alternate offer is submitted, the offeror shall submit a separate Standard Form 1442 for the alternate offer, and a separate price comparison table prepared in accordance with paragraphs (c) and (d) of FAR clause 52.225-11 for the offer that is based on the use of any foreign construction material for which the Government has not yet determined an exception applies.

(3) If the Government determines that a particular exception requested in accordance with paragraph (c) of FAR clause 52.225-11 does not apply, the Government will evaluate only those offers based on use of the equivalent domestic or designated country construction material, and the offeror shall be required to furnish such domestic or designated country construction material. An offer based on use of the foreign construction material for which an exception was requested—

(i) Will be rejected as nonresponsive if this acquisition is conducted by sealed bidding; or

(ii) May be accepted if revised during negotiations.

60. *FAR 52.225-13 RESTRICTIONS ON CERTAIN FOREIGN PURCHASES (JULY 2000)

(a) The Contractor shall not acquire, for use in the performance of this contract, any supplies or services originating from sources within, or that were located in or transported from or through, countries whose products are banned from importation into the United States under regulations of the Office of Foreign Assets Control, Department of the Treasury. Those countries are Cuba, Iran, Iraq, Libya, North Korea, Sudan, the territory of Afghanistan controlled by the Taliban , and Serbia (excluding the territory of Kosovo).

(b) The Contractor shall not acquire for use in the performance of this contract any supplies or services from entities controlled by the government of Iraq.

(c) The Contractor shall insert this clause, including this paragraph (c), in all subcontracts.

(End of clause)

61. *FAR 52.226-1 UTILIZATION OF INDIAN ORGANIZATIONS AND INDIAN-OWNED ECONOMIC ENTERPRISES (JUNE 2000)

(a) Definitions. As used in this clause:

"Indian" means any person who is a member of any Indian tribe, band, group, pueblo, or community that is recognized by the Federal Government as eligible for services from the Bureau of Indian Affairs (BIA) in accordance with 25 U.S.C. 1452(c) and any "Native" as defined in the Alaska Native Claims Settlement Act (43 U.S.C. 1601).

"Indian organization" means the governing body of any Indian tribe or entity established or recognized by the governing body of an Indian tribe for the purposes of 25 U.S.C., chapter 17.

"Indian-owned economic enterprise" means any Indian-owned (as determined by the Secretary of the Interior) commercial, industrial, or business activity established or organized for the purpose of profit, provided that Indian ownership constitutes not less than 51 percent of the enterprise.

"Indian tribe" means any Indian tribe, band, group, pueblo, or community, including native villages and native groups (including corporations organized by Kenai, Juneau, Sitka, and Kodiak) as defined in the Alaska Native Claims Settlement Act, that is recognized by the Federal Government as eligible for services from BIA in accordance with 25 U.S.C. 1452(c).

"Interested party" means a prime contractor or an actual or prospective offeror whose direct economic interest would be affected by the award of a subcontract or by the failure to award a subcontract.

(b) The Contractor shall use its best efforts to give Indian organizations and Indian-owned economic enterprises (25 U.S.C. 1544) the maximum practicable opportunity to participate in the subcontracts it awards to the fullest extent consistent with efficient performance of its contract.

(1) The Contracting Officer and the Contractor, acting in good faith, may rely on the representation of an Indian organization or Indian-owned economic enterprise as to its eligibility, unless an interested party challenges its status or the Contracting Officer has independent reason to question that status. In the event of a challenge to the representation of a subcontractor, the Contracting Officer will refer the matter to the—

U.S. Department of the Interior
Bureau of Indian Affairs (BIA)
Attn: Chief, Division of Contracting and
Grants Administration
1849 C Street, NW,
MS-2626-MIB
Washington, DC 20240-4000.

The BIA will determine the eligibility and notify the Contracting Officer. No incentive payment will be made within 50 working days of subcontract award or while a challenge is pending. If a subcontractor is determined to be an ineligible participant, no incentive payment will be made under the Indian Incentive Program.

(2) The Contractor may request an adjustment under the Indian Incentive Program to the following:

(i) The estimated cost of a cost-type contract.
(ii) The target cost of a cost-plus-incentive-fee prime contract.
(iii) The target cost and ceiling price of a fixed-price incentive prime contract.
(iv) The price of a firm-fixed-price prime contract.

(3) The amount of the adjustment to the prime contract is 5 percent of the estimated cost, target cost, or firm-fixed-price included in the subcontract initially awarded to the Indian organization or Indian-owned economic enterprise.

(4) The Contractor has the burden of proving the amount claimed and must assert its request for an adjustment prior to completion of contract performance.

(c) The Contracting Officer, subject to the terms and conditions of the contract and the availability of funds, will authorize an incentive payment of 5 percent of the amount paid to the subcontractor. The Contracting Officer will seek funding in accordance with agency procedures.

(End of Clause)

62. *FAR 52.227-1 AUTHORIZATION AND CONSENT (JUL 1995)

(a) The Government authorizes and consents to all use and manufacture, in performing this contract or any subcontract at any tier, of any invention described in and covered by a United States patent

(1) embodied in the structure or composition of any article the delivery of which is accepted by the Government under this contract or

(2) used in machinery, tools, or methods whose use necessarily results from compliance by the Contractor or a subcontractor with

(i) specifications or written provisions forming a part of this contract or

(ii) specific written instructions given by the Contracting Officer directing the manner of performance. The entire liability to the Government for infringement of a patent of the United States shall be determined solely by the provisions of the indemnity clause, if any, included in this contract or any subcontract hereunder (including any lower-tier subcontract), and the Government assumes liability for all other infringement to the extent of the authorization and consent hereinabove granted.

(b) The Contractor agrees to include, and require inclusion of, this clause, suitably modified to identify the parties, in all subcontracts at any tier for supplies or services (including construction, architect-engineer services, and materials, supplies, models, samples, and design or testing services expected to exceed the simplified acquisition threshold) however, omission of this clause from any subcontract, including those at or below the simplified acquisition threshold, does not affect this authorization and consent.

63. *FAR 52.227-2 NOTICE AND ASSISTANCE REGARDING PATENT AND COPYRIGHT INFRINGEMENT (AUG 1996)

(a) The Contractor shall report to the Contracting Officer, promptly and in reasonable written detail, each notice or claim of patent or copy-right infringement based on the performance of this contract of which the Contractor has knowledge.

(b) In the event of any claim or suit against the Government on account of any alleged patent or copyright infringement arising out of the performance of this contract or out of the use of any supplies furnished or work or services performed under this contract, the Contractor shall furnish to the Government, when requested by the Contracting Officer, all evidence and information in possession of the Contractor pertaining to such suit or claim. Such evidence and information shall be furnished at the expense of the Government except where the Contractor has agreed to indemnify the Government.

(c) The Contractor agrees to include, and require inclusion of, this clause in all subcontracts at any tier for supplies or services (including construction and architect-engineer subcontracts and those for material, supplies, models, samples, or design or testing services) expected to exceed the simplified acquisition threshold at FAR 2.101.

64. *FAR 52.227-4 PATENT INDEMNITY--CONSTRUCTION CONTRACTS (APR 1984)

Except as otherwise provided, the Contractor agrees to indemnify the Government and its officers, agents, and employees against liability, including costs and expenses, for infringement upon any United States patent (except a patent issued upon an application that is now or may hereafter be withheld from issue pursuant to a Secrecy Order under 35 U.S.C. 181) arising out of performing this contract or out of the use or disposal by or for the account of the Government of supplies furnished or work performed under this contract.

65. DFARS 252.227-7033 RIGHTS IN SHOP DRAWINGS (APR 1966)

(a) Shop drawings for construction means drawings, submitted to the Government by the Construction Contractor, subcontractor or any lower-tier subcontractor pursuant to a construction contract, showing in detail

(i) the proposed fabrication and assembly of structural elements and (ii) the installation (i.e., form, fit, and attachment details) of materials or equipment. The Government may duplicate, use, and disclose in any manner and for any purpose shop drawings delivered under this contract.

(b) This clause, including this paragraph (b), shall be included in all subcontracts hereunder at any tier.

66. FAR 52.228-1 BID GUARANTEE (SEP 1996) [NOTE: Not required for projects less than $100,000]

(a) Failure to furnish a bid guarantee in the proper form and amount, by the time set for opening of bids, may be cause for rejection of bids.

(b) The bidder shall furnish a bid guarantee in the form of a firm commitment, e.g., bid bond supported by good and sufficient surety or sureties acceptable to the Government, postal money order, certified check, cashier's check, irrevocable letter of credit, or, under Treasury Department regulations, certain bonds or notes of the United States. The Contracting Officer will return bid guarantees, other than bid bonds, (1) to unsuccessful bidders as soon as practicable after the opening of bids; and (2) to the successful bidder upon execution of contractual documents and bonds (including any necessary coinsurance or reinsurance agreements), as required by the bid as accepted.

(c) The amount of the bid guarantee shall be twenty (20%) of the bid price or Three Million Dollars ($3,000,000), whichever is less.

(d) If the successful bidder, upon acceptance of its bid by the Government within the period specified for acceptance, fails to execute all contractual documents or furnish executed bond(s) within 10 days after receipt of the forms by the bidder, the Contracting Officer may terminate the contract for default.

(e) In the event the contract is terminated for default, the bidder is liable for any cost of acquiring the work that exceeds the amount of its bid and the bid guarantee is available to offset the difference.

67. *FAR 52.228-2 ADDITIONAL BOND SECURITY (OCT 1997)

The Contractor shall promptly furnish additional security required to protect the Government and persons supplying labor or materials under this contract if--

(a) Any surety upon any bond, or issuing financial institution for other security, furnished with this contract becomes unacceptable to the Government;

(b) Any surety fails to furnish reports on its financial condition as required by the Government;

(c) The contract price is increased so that the penal sum of any bond becomes inadequate in the opinion of the Contracting Officer; or

(d) An irrevocable letter of credit (ILC) used as security will expire before the end of the period of required security. If the Contractor does not furnish an acceptable extension or replacement ILC, or other acceptable substitute, at least 30 days before an ILC's scheduled expiration, the Contracting Officer has the right to immediately draw on the ILC.

68. *FAR 52.228-5 INSURANCE--WORK ON A GOVERNMENT INSTALLATION (JAN 1997) [For

Contracts Exceeding $100,000]

(a) The Contractor shall, at its own expense, provide and maintain during the entire performance of this contract, at least the kinds and minimum amounts of insurance required in the Schedule or elsewhere in the contract.

(b) Before commencing work under this contract, the Contractor shall notify the Contracting Officer in writing that the required insurance has been obtained. The policies evidencing required insurance shall contain an endorsement to the effect that any cancellation or any material change adversely affecting the Government's interest shall not be effective

(1) for such period as the laws of the State in which this contract is to be performed prescribe, or

(2) until 30 days after the insurer or the Contractor gives written notice to the Contracting Officer, whichever period is longer.

(c) The Contractor shall insert the substance of this clause, including this paragraph (c), in subcontracts under this contract that require work on a Government installation and shall require subcontractors to provide and maintain the insurance required in the Schedule or elsewhere in the contract. The Contractor shall maintain a copy of all subcontractors' proofs of required insurance, and shall make copies available to the Contracting Officer upon request.

69. *FAR 52.228-11 PLEDGES OF ASSETS (FEB 1992)

(a) Offerors shall obtain from each person acting as an individual surety on a bid guarantee, a performance bond, or a payment bond--

(1) Pledge of assets; and

(2) Standard Form 28, Affidavit of Individual Surety.

(b) Pledges of assets from each person acting as an individual surety shall be in the form of--

(1) Evidence of an escrow account containing cash, certificates of deposit, commercial or Government securities, or other assets described in FAR 28.203-2 (except see 28.203-2(b)(2) with respect to Government securities held in book entry form) and/or;

(2) A recorded lien on real estate. The offeror will be required to provide--

(i) Evidence of title in the form of a certificate of title prepared by a title insurance company approved by the United States Department of Justice. This title evidence must show fee simple title vested in the surety along with any concurrent owners; whether any real estate taxes are due and payable; and any recorded encumbrances against the property, including the lien filed in favor of the Government as required by FAR 28.203-3(d);

(ii) Evidence of the amount due under any encumbrance shown in the evidence of title;

(iii) A copy of the current real estate tax assessment of the property or a current appraisal dated no earlier than 6 months prior to the date of the bond, prepared by a professional appraiser who certifies that the appraisal has been conducted in accordance with the generally accepted appraisal standards as reflected in the Uniform Standards of Professional Appraisal Practice, as promulgated by the Appraisal Foundation.

70. *FAR 52.228-12 PROSPECTIVE SUBCONTRACTOR REQUESTS FOR BONDS (OCT 1995)

In accordance with Section 806(a)(3) of Public Law 102-190, as amended by Sections 2091 and 8105 of Pub. L. 103-355, upon the request of a prospective subcontractor or supplier offering to furnish labor or material for the performance of this contract for which a payment bond has been furnished to the Government pursuant to the Miller Act, the Contractor shall promptly provide a copy of such payment bond to the requestor.

71. FAR 52.228-13 ALTERNATIVE PAYMENT PROTECTIONS (JULY 2000) [Applicable only for projects or delivery orders less than $100,000]

(a) The Contractor shall submit one of the following payment protections:

(1) A payment bond.

(2) An irrevocable letter of credit from a federally insured financial institution.

(b) The amount of the payment protection shall be 100 percent of the contract price.

(c) The submission of the payment protection is required within 10 days of contract award.

(d) The payment protection shall provide protection for the full contract performance period plus a one-year period.

(e) Except for escrow agreements and payment bonds, which provide their own protection procedures, the Contracting Officer is authorized to access funds under the payment protection when it has been alleged in writing by a supplier of labor or material that a nonpayment has occurred, and to withhold funds pending resolution by administrative or judicial proceedings or mutual agreement of the parties.

(f) When a tripartite escrow agreement is used, the Contractor shall utilize only suppliers of labor and material that signed the escrow agreement.

72. FAR 52.228-14 IRREVOCABLE LETTER OF CREDIT (DEC 1999)

(a) "Irrevocable letter of credit" (ILC), as used in this clause, means a written commitment by a federally insured financial institution to pay all or part of a stated amount of money, until the expiration date of the letter, upon presentation by the Government (the beneficiary) of a written demand therefor. Neither the financial institution nor the offeror/Contractor can revoke or condition the letter of credit.

(b) If the offeror intends to use an ILC in lieu of a bid bond, or to secure other types of bonds such as performance and payment bonds, the letter of credit and letter of confirmation formats in paragraphs (e) and (f) of this clause shall be used.

(c) The letter of credit shall be irrevocable, shall require presentation of no document other than a written demand and the ILC (including confirming letter, if any), shall be issued/confirmed by an acceptable federally insured financial institution as provided in paragraph (d) of this clause, and--

(1) If used as a bid guarantee, the ILC shall expire no earlier than 60 days after the close of the bid acceptance period;

(2) If used as an alternative to corporate or individual sureties as security for a performance or payment bond, the offeror/Contractor may submit an ILC to cover the entire period of performance or may submit an ILC with an initial expiration date estimated to cover the entire period for which financial security is required or may submit an ILC with an initial expiration that is a minimum period of one year from the date of issuance. The ILC shall provide that, unless the issuer provides the beneficiary written notice of non-renewal of least 60 days in advance of the current expiration date, the ILC is automatically extended without amendment for one year from the expiration date, or any future expiration date, until the period of required coverage is completed and the Contracting Officer provides the financial institution with a written statement waiving the right to payment. The period of required coverage shall be:

(i) For contracts subject to the Miller Act, the later of--

(A) One year following the expected date of final payment;

(B) For performance bonds only, until completion of any warranty period; or

(C) For payment bonds only, until resolution of all claims filed against the payment bond during the one-year period following final payment.

(ii) For contracts not subject to the Miller Act, the later of--

(A) 90 days following final payment; or

(B) For performance bonds only, until completion of any warranty period.

(d) Only federally insured financial institution rated investment grade or higher shall issue or confirm the ILC. The offeror/Contractor shall provide the Contracting Officer a credit rating that indicates the financial institution has the required rating(s) as of the date of issuance of the ILC. Unless the financial institution issuing the

ILC had letter of credit business of at least $25 million in the past year, ILCs over $5 million must be confirmed by another acceptable financial institution that had letter of credit business of at least $25 million in the past year.

(e) The following format shall be used by the issuing financial institution to create an ILC:

[Issuing Financial Institution's Letterhead or Name and Address]

Issue Date----------

Irrevocable Letter of Credit No.----------
Account party's name----------
Account party's address----------
For Solicitation No.----------
(For reference only)

TO: [U.S. Government agency]
[U.S. Government agency's address]

1. We hereby establish this irrevocable and transferable Letter of Credit in your favor for one or more drawings up to United States $_____. This Letter of Credit is payable at [issuing financial institution's and, if any, confirming financial institution's] office at [issuing financial institution's address and, if any, confirming financial institution's address] and expires with our close of business on _____, or any automatically extended expiration date.

2. We hereby undertake to honor your or transferee's sight draft(s) drawn on issuing or, if any, the confirming financial institution, for all or any part of this credit if presented with this Letter of Credit and confirmation, if any, at the office specified in paragraph 1 of this Letter of Credit on or before the expiration date or any automatically extended expiration date.

3. [This paragraph is omitted if used as a bid guarantee, and subsequent paragraphs are renumbered.] It is a condition of this Letter of Credit that it is deemed to be automatically extended without amendment for one year from the expiration date hereof, or any future expiration date, unless at least 60 days prior to any expiration date, we notify you or the transferee by registered mail, or other receipted means of delivery, that we elect not to consider this Letter of Credit renewed for any such additional period. At the time we notify you, we also agree to notify the account party (and confirming financial institution, if any) by the same means of delivery.

4. This Letter of Credit is transferable. Transfers and assignments of proceeds are to be effected without charge to either the beneficiary or the transferee/assignee of proceeds. Such transfer or assignment shall be only at the written direction of the Government (the beneficiary) in a form satisfactory to the issuing financial institution and the confirming financial institution, if any.

5. This Letter of Credit is subject to the Uniform Customs and Practice (UCP) for Documentary Credits, 1993 Revision, International Chamber of Commerce Publication No. 500, and to the extent not inconsistent therewith, to the laws of _____ [state of confirming financial institution, if any, otherwise state of issuing financial institution].

6. If this credit expires during an interruption of business of this financial institution as described in Article 17 of the UCP, the financial institution specifically agrees to effect payment if this credit is drawn against within 30 days after the resumption of our business.

Sincerely,

[Issuing financial institution]

(f) The following format shall be used by the financial institution to confirm an ILC:

[Confirming Financial Institution's Letterhead or Name and Address]---

(Date) _____

Our Letter of Credit
Advice Number----------

Beneficiary:----------
[U.S. Government agency]
Issuing Financial Institution:----------
Issuing Financial Institution's LC No.:----------

Gentlemen:

1. We hereby confirm the above indicated Letter of Credit, the original of which is attached, issued by _____ [name of issuing financial institution] for drawings of up to United States dollars _____/U.S. $_____ and expiring with our close of business on _____ [the expiration date], or any automatically extended expiration date.

2. Draft(s) drawn under the Letter of Credit and this Confirmation are payable at our office located at _____.

3. We hereby undertake to honor sight draft(s) drawn under and presented with the Letter of Credit and this Confirmation at our offices as specified herein.

4. [This paragraph is omitted if used as a bid guarantee, and subsequent paragraphs are renumbered.] It is a condition of this confirmation that it be deemed automatically extended without amendment for one year from the expiration date hereof, or any automatically extended expiration date, unless:

(a) At least 60 days prior to any such expiration date, we shall notify the Contracting Officer, or the transferee and the issuing financial institution, by registered mail or other receipted means of delivery, that we elect not to consider this confirmation extended for any such additional period; or

(b) The issuing financial institution shall have exercised its right to notify you or the transferee, the account party, and ourselves, of its election not to extend the expiration date of the Letter of Credit.

5. This confirmation is subject to the Uniform Customs and Practice (UCP) for Documentary Credits, 1993 Revision, International Chamber of Commerce Publication No. 500, and to the extent not inconsistent therewith, to the laws of _____ [state of confirming financial institution].

6. If this confirmation expires during an interruption of business of this financial institution as described in Article 17 of the UCP, we specifically agree to effect payment if this credit is drawn against within 30 days after the resumption of our business.

Sincerely,

[Confirming financial institution]

(g) The following format shall be used by the Contracting Officer for a sight draft to draw on the Letter of Credit:

SIGHT DRAFT

[City, State]

(Date) _____

[Name and address of financial institution]
Pay to the order of----------
[Beneficiary Agency] _____

the sum of United States $ _____
This draft is drawn under----------
Irrevocable Letter of Credit No.----------

[Beneficiary Agency]
By: _____

73. FAR 52.228-15 PERFORMANCE AND PAYMENT BONDS (JULY 2000).

[This provision is Not Required for projects less than $100,000. See Clauses "Alternate Payment Protections" and "Inapplicable Provisions and Clauses".]

(a) *Definitions.* As used in this clause—

"Original contract price" means the award price of the contract; or, for requirements contracts, the price payable for the estimated total quantity; or, for indefinite-quantity contracts, the price payable for the specified minimum quantity. Original contract price does not include the price of any options, except those options exercised at the time of contract award.

(b) *Amount of required bonds.* Unless the resulting contract price is $100,000 or less, the successful offeror shall furnish performance and payment bonds to the Contracting Officer as follows:

(1) *Performance bonds (Standard Form 25).* The penal amount of performance bonds at the time of contract award shall be 100 percent of the original contract price.

(2) *Payment Bonds (Standard Form 25-A).* The penal amount of payment bonds at the time of contract award shall be 100 percent of the original contract price.

(3) *Additional bond protection.* (i) The Government may require additional performance and payment bond protection if the contract price is increased. The increase in protection generally will equal 100 percent of the increase in contract price.

(ii) The Government may secure the additional protection by directing the Contractor to increase the penal amount of the existing bond or to obtain an additional bond.

(c) *Furnishing executed bonds.* The Contractor shall furnish all executed bonds, including any necessary reinsurance agreements, to the Contracting Officer, within the time period specified in the Bid Guarantee provision of the solicitation, or otherwise specified by the Contracting Officer, but in any event, before starting work.

(d) *Surety or other security for bonds.* The bonds shall be in the form of firm commitment, supported by corporate sureties whose names appear on the list contained in Treasury Department Circular 570, individual sureties, or by other acceptable security such as postal money order, certified check, cashier's check, irrevocable letter of credit, or, in accordance with Treasury Department regulations, certain bonds or notes of the United States. Treasury Circular 570 is published in the Federal Register or may be obtained from the:

U.S. Department of Treasury
Financial Management Service
Surety Bond Branch
401 14th Street, NW, 2nd Floor, West Wing
Washington, DC 20227.

(e) *Notice of subcontractor waiver of protection (40 U.S.C. 270b(c).* Any waiver of the right to sue on the payment bond is void unless it is in writing, signed by the person whose right is waived, and executed after such person has first furnished labor or material for use in the performance of the contract.
(End of clause)

74. FAR 52.229-3 FEDERAL, STATE, AND LOCAL TAXES (JAN 1991) [For Contracts Exceeding $100,000]

(a) "Contract date," as used in this clause, means the date set for bid opening or, if this is a negotiated contract or a modification, the effective date of this contract or modification.

"All applicable Federal, State, and local taxes and duties," as used in this clause, means all taxes and duties, in effect on the contract date, that the taxing authority is imposing and collecting on the transactions or property covered by this contract.

"After-imposed Federal tax," as used in this clause, means any new or increased Federal excise tax or duty, or tax that was exempted or excluded on the contract date but whose exemption was later revoked or reduced during the contract period, on the transactions or property covered by this contract that the Contractor is

required to pay or bear as the result of legislative, judicial, or administrative action taking effect after the contract date. It does not include social security tax or other employment taxes.

"After-relieved Federal tax," as used in this clause, means any amount of Federal excise tax or duty, except social security or other employment taxes, that would otherwise have been payable on the transactions or property covered by this contract, but which the Contractor is not required to pay or bear, or for which the Contractor obtains a refund or drawback, as the result of legislative, judicial, or administrative action taking effect after the contract date.

(b) The contract price includes all applicable Federal, State, and local taxes and duties.

(c) The contract price shall be increased by the amount of any after-imposed Federal tax, provided the Contractor warrants in writing that no amount for such newly imposed Federal excise tax or duty or rate increase was included in the contract price, as a contingency reserve or otherwise.

(d) The contract price shall be decreased by the amount of any after-relieved Federal tax.

(e) The contract price shall be decreased by the amount of any Federal excise tax or duty, except social security or other employment taxes, that the Contractor is required to pay or bear, or does not obtain a refund of, through the Contractor's fault, negligence, or failure to follow instructions of the Contracting Officer.

(f) No adjustment shall be made in the contract price under this clause unless the amount of the adjustment exceeds $250.

(g) The Contractor shall promptly notify the Contracting Officer of all matters relating to any Federal excise tax or duty that reasonably may be expected to result in either an increase or decrease in the contract price and shall take appropriate action as the Contracting Officer directs.

(h) The Government shall, without liability, furnish evidence appropriate to establish exemption from any Federal, State, or local tax when the Contractor requests such evidence and a reasonable basis exists to sustain the exemption.

75. *FAR 52.229-5 TAXES--CONTRACTS PERFORMED IN U.S. POSSESSIONS OR PUERTO RICO (APR 1984)

The term "local taxes," as used in the Federal, State, and local taxes clause of this contract, includes taxes imposed by a possession of the United States or by Puerto Rico.

76. DFARS 252.231-7000 SUPPLEMENTAL COST PRINCIPLES (DEC 1991)

When the allowability of costs under this contract is determined in accordance with part 31 of the Federal Acquisition Regulation (FAR) allowability shall also be determined in accordance with part 231 of the DoD FAR Supplement, in effect on the date of this contract.

77. *FAR 52.232-5 PAYMENTS UNDER FIXED-PRICE CONSTRUCTION CONTRACTS (MAY 1997)

(a) Payment of Price. The Government shall pay the Contractor the contract price as provided in this contract.

(b) Progress Payments. The Government shall make progress payments monthly as the work proceeds, or at more frequent intervals as determined by the Contracting Officer, on estimates of work accomplished which meets the standards of quality established under the contract, as approved by the Contracting Officer.

(1) The Contractor's request for progress payments shall include the following substantiation:

(i) An itemization of the amounts requested, related to the various elements of work required by the contract covered by the payment requested.

(ii) A listing of the amount included for work performed by each subcontractor under the contract.

(iii) A listing of the total amount of each subcontract under the contract.

(iv) A listing of the amounts previously paid to each such subcontractor under the contract.

(v) Additional supporting data in a form and detail required by the Contracting Officer.

(2) In the preparation of estimates, the Contracting Officer may authorize material delivered on the site and preparatory work done to be taken into consideration. Material delivered to the Contractor at locations other than the site also may be taken into consideration if--

(i) Consideration is specifically authorized by this contract; and

(ii) The Contractor furnishes satisfactory evidence that it has acquired title to such material and that the material will be used to perform this contract.

(c) Contractor Certification. Along with each request for progress payments, the Contractor shall furnish the following certification, or payment shall not be made: (However, if the Contractor elects to delete paragraph (c)(4) from the certification, the certification is still acceptable.) I hereby certify, to the best of my knowledge and belief, that--

(1) The amounts requested are only for performance in accordance with the specifications, terms, and conditions of the contract;

(2) Payments to subcontractors and suppliers have been made from previous payments received under the contract, and timely payments will be made from the proceeds of the payment covered by this certification, in accordance with subcontract agreements and the requirements of chapter 39 of Title 31, United States Code;

(3) This request for progress payments does not include any amounts which the prime contractor intends to withhold or retain from a subcontractor or supplier in accordance with the terms and conditions of the subcontract; and

(4) This certification is not to be construed as final acceptance of a subcontractor's performance.

(Name)

(Title)

(Date)

(d) Refund of Unearned Amounts. If the Contractor, after making a certified request for progress payments, discovers that a portion or all of such request constitutes a payment for performance by the Contractor that fails to conform to the specifications, terms, and conditions of this contract (hereinafter referred to as the "unearned amount"), the Contractor shall--

(1) Notify the Contracting Officer of such performance deficiency; and

(2) Be obligated to pay the Government an amount (computed by the Contracting Officer in the manner provided in paragraph (j) of this clause) equal to interest on the unearned amount from the 8th day after the date of receipt of the unearned amount until--

(i) The date the Contractor notifies the Contracting Officer that the performance deficiency has been corrected; or

(ii) The date the Contractor reduces the amount of any subsequent certified request for progress payments by an amount equal to the unearned amount.

(e) Retainage. If the Contracting Officer finds that satisfactory progress was achieved during any period for which a progress payment is to be made, the Contracting Officer shall authorize payment to be made in full. However, if satisfactory progress has not been made, the Contracting Officer may retain a maximum of 10 percent of the amount of the payment until satisfactory progress is achieved. When the work is substantially complete, the Contracting Officer may retain from previously withheld funds and future progress payments that amount the Contracting Officer considers adequate for protection of the Government and shall release to the Contractor all the remaining withheld funds. Also, on completion and acceptance of each separate building, public work, or other division of the contract, for which the price is stated separately in the contract, payment shall be made for the completed work without retention of a percentage.

(f) Title, Liability, and Reservation of Rights. All material and work covered by progress payments made shall, at the time of payment, become the sole property of the Government, but this shall not be construed as--

(1) Relieving the Contractor from the sole responsibility for al material and work upon which payments have been made or the restoration of any damaged work; or

(2) Waiving the right of the Government to require the fulfillment of all of the terms of the contract.

(g) Reimbursement for Bond Premiums. In making these progress payments, the Government shall, upon request, reimburse the Contractor for the amount of premiums paid for performance and payment bonds (including coinsurance and reinsurance agreements, when applicable) after the Contractor has furnished evidence of full payment to the surety. The retainage provisions in paragraph (e) of this clause shall not apply to that portion of progress payments attributable to bond premiums.

(h) Final Payment. The Government shall pay the amount due the Contractor under this contract after--

(1) Completion and acceptance of all work;

(2) Presentation of a properly executed voucher; and

(3) Presentation of release of all claims against the Government arising by virtue of this contract, other than claims, in stated amounts, that the Contractor has specifically excepted from the operation of the release. A release may also be required of the assignee if the Contractor's claim to amounts payable under this contract has been assigned under the Assignment of Claims Act of 1940 (31 U.S.C. 3727 and 41 U.S.C. 15).

(i) Limitation Because of Undefinitized Work. Notwithstanding any provision of this contract, progress payments shall not exceed 80 percent on work accomplished on undefinitized contract actions. A "contract action" is any action resulting in a contract, as defined in FAR Subpart 2.1, including contract modifications for additional supplies or services, but not including contract modifications that are within the scope and under the terms of the contract, such as contract modifications issued pursuant to the Changes clause, or funding and other administrative changes.

(j) Interest Computation on Unearned Amounts. In accordance with 31 U.S.C. 3903(c)(1), the amount payable under subparagraph (d)(2) of this clause shall be--

(1) Computed at the rate of average bond equivalent rates of 91-day Treasury bills auctioned at the most recent auction of such bills prior to the date the Contractor receives the unearned amount; and

(2) Deducted from the next available payment to the Contractor.

78. RESERVED.

79. *FAR 52.232-17 INTEREST (JUN 1996)

(a) Except as otherwise provided in this contract under a Price Reduction for Defective Cost or Pricing Data clause or a Cost Accounting Standards clause, all amounts that become payable by the Contractor to the Government under this contract (net of any applicable tax credit under the Internal Revenue Code (26 U.S.C. 1481)) shall bear simple interest from the date due until paid unless paid within 30 days of becoming due. The interest rate shall be the interest rate established by the Secretary of the Treasury as provided in Section 12 of the Contract Disputes Act of 1978 (Public Law 95-563), which is applicable to the period in which the amount becomes due, as provided in paragraph (b) of this clause, and then at the rate applicable for each six-month period as fixed by the Secretary until the amount is paid.

(b) Amounts shall be due at the earliest of the following dates:

(1) The date fixed under this contract.

(2) The date of the first written demand for payment consistent with this contract, including any demand resulting from a default termination.

(3) The date the Government transmits to the Contractor a proposed supplemental agreement to confirm completed negotiations establishing the amount of debt.

(4) If this contract provides for revision of prices, the date of written notice to the Contractor stating the amount of refund payable in connection with a pricing proposal or a negotiated pricing agreement not confirmed by contract modification.

(c) The interest charge made under this clause may be reduced under the procedures prescribed in 32.614-2 of the Federal Acquisition Regulation in effect on the date of this contract.

80. *FAR 52.232-23 ASSIGNMENT OF CLAIMS (JAN 1986)

(a) The Contractor, under the Assignment of Claims Act, as amended, 31 U.S.C. 3727, 41 U.S.C. 15 (hereafter referred to as "the Act"), may assign its rights to be paid amounts due or to become due as a result of the performance of this contract to a bank, trust company, or other financing institution, including any Federal lending agency. The assignee under such an assignment may thereafter further assign or reassign its right under the original assignment to any type of financing institution described in the preceding sentence.

(b) Any assignment or reassignment authorized under the Act and this clause shall cover all unpaid amounts payable under this contract, and shall not be made to more than one party, except that an assignment or reassignment may be made to one party as agent or trustee for two or more parties participating in the financing of this contract.

(c) The Contractor shall not furnish or disclose to any assignee under this contract any classified document (including this contract) or information related to work under this contract until the Contracting Officer authorizes such action in writing.

81. *FAR 52.232-27 PROMPT PAY FOR CONSTRUCTION CONTRACTS (FEB 2002)

Notwithstanding any other payment terms in this contract, the Government will make invoice payments under the terms and conditions specified in this clause. The Government considers payment as being made on the day a check is dated or the date of an electronic funds transfer. Definitions of pertinent terms are set forth in sections 2.101, 32.001, and 32.902 of the Federal Acquisition Regulation. All days referred to in this clause are calendar days, unless otherwise specified. (However, see paragraph (a)(3) concerning payments due on Saturdays, Sundays, and legal holidays.)

(a) *Invoice payments*—(1) *Types of invoice payments.* For purposes of this clause, there are several types of invoice payments that may occur under this contract, as follows:

(i) Progress payments, if provided for elsewhere in this contract, based on Contracting Officer approval of the estimated amount and value of work or services performed, including payments for reaching milestones in any project.

(A) The due date for making such payments is 14 days after the designated billing office receives a proper payment request. If the designated billing office fails to annotate the payment request with the actual date of receipt at the time of receipt, the payment due date is the 14th day after the date of the Contractor's payment request, provided the designated billing office receives a proper payment request and there is no disagreement over quantity, quality, or Contractor compliance with contract requirements.

(B) The due date for payment of any amounts retained by the Contracting Officer in accordance with the clause at 52.232–5, Payments Under Fixed-Price Construction Contracts, is as specified in the contract or, if not specified, 30 days after approval by the Contracting Officer for release to the Contractor.

(ii) Final payments based on completion and acceptance of all work and presentation of release of all claims against the Government arising by virtue of the contract, and payments for partial deliveries that have been accepted by the Government (*e.g.*, each separate building, public work, or other division of the contract for which the price is stated separately in the contract).

(A) The due date for making such payments is the later of the following two events:

(*1*) The 30th day after the designated billing office receives a proper invoice from the Contractor.

(*2*) The 30th day after Government acceptance of the work or services completed by the Contractor. For a final invoice when the payment amount is subject to contract settlement actions (*e.g.*, release of claims), acceptance is deemed to occur on the effective date of the contract settlement.

(B) If the designated billing office fails to annotate the invoice with the date of

actual receipt at the time of receipt, the invoice payment due date is the 30th day after the date of the Contractor's invoice, provided the designated billing office receives a proper invoice and there is no disagreement over quantity, quality, or Contractor compliance with contract requirements.

(2) *Contractor's invoice.* The Contractor shall prepare and submit invoices to the designated billing office specified in the contract. A proper invoice must include the items listed in paragraphs (a)(2)(i) through (a)(2)(xi) of this clause. If the invoice does not comply with these requirements, the designated billing office must return it within 7 days after receipt, with the reasons why it is not a proper invoice. When computing any interest penalty owed the Contractor, the Government will take into account if the Government notifies the Contractor of an improper invoice in an untimely manner.

(i) Name and address of the Contractor.

(ii) Invoice date and invoice number. (The Contractor should date invoices as close as possible to the date of mailing or transmission.)

(iii) Contract number or other authorization for work or services performed (including order number and contract line item number).

(iv) Description of work or services performed.

(v) Delivery and payment terms (*e.g.*, discount for prompt payment terms).

(vi) Name and address of Contractor official to whom payment is to be sent (must be the same as that in the contract or in a proper notice of assignment).

(vii) Name (where practicable), title, phone number, and mailing address of person to notify in the event of a defective invoice.

(viii) For payments described in paragraph (a)(1)(i) of this clause, substantiation of the amounts requested and certification in accordance with the requirements of the clause at 52.232–5, Payments Under Fixed-Price Construction Contracts.

(ix) Taxpayer Identification Number (TIN). The Contractor shall include its TIN on the invoice only if required elsewhere in this contract.

(x) Electronic funds transfer (EFT) banking information.

(A) The Contractor shall include EFTbanking information on the invoice only if required elsewhere in this contract.

(B) If EFT banking information is not required to be on the invoice, in order for the invoice to be a proper invoice, the Contractor shall have submitted correct EFT banking information in accordance with the applicable solicitation provision (*e.g.*, 52.232–38, Submission of Electronic Funds Transfer Information with Offer), contract clause (*e.g.*, 52.232–33, Payment by Electronic Funds Transfer—Central Contractor Registration, or 52.232–34, Payment by Electronic Funds Transfer—Other Than Central Contractor Registration), or applicable agency procedures.

(C) EFT banking information is not required if the Government waived the requirement to pay by EFT.

(xi) Any other information or documentation required by the contract.

(3) *Interest penalty.* The designated payment office will pay an interest penalty automatically, without request from the Contractor, if payment is not made by the due date and the conditions listed in paragraphs (a)(3)(i) through (a)(3)(iii) of this clause are met, if applicable. However, when the due date falls on a Saturday, Sunday, or legal holiday, the designated payment office may make payment on the following working day without incurring a late payment interest penalty.

(i) The designated billing office received a proper invoice.

(ii) The Government processed a receiving report or other Government documentation authorizing payment and there was no disagreement over quantity, quality, Contractor compliance with any contract term or condition, or requested progress payment amount.

(iii) In the case of a final invoice for any balance of funds due the Contractor for work or services performed, the amount was not subject to further contract settlement actions between the Government and the Contractor.

(4) *Computing penalty amount.* The Government will compute the interest penalty in accordance with the Office of Management and Budget prompt payment regulations at 5 CFR part 1315.

(i) For the sole purpose of computing an interest penalty that might be due the Contractor for payments described in paragraph (a)(1)(ii) of this clause, Government acceptance or approval is deemed to occur constructively on the 7th day after the Contractor has completed the work or services in accordance

with the terms and conditions of the contract. If actual acceptance or approval occurs within the constructive acceptance or approval period, the Government will base the determination of an interest penalty on the actual date of acceptance or approval. Constructive acceptance or constructive approval requirements do not apply if there is a disagreement over quantity, quality, or Contractor compliance with a contract provision. These requirements also do not compel Government officials to accept work or services, approve Contractor estimates, perform contract administration functions, or make payment prior to fulfilling their responsibilities.

(ii) The prompt payment regulations at 5 CFR 1315.10(c) do not require the Government to pay interest penalties if payment delays are due to disagreement between the Government and the Contractor over the payment amount or other issues involving contract compliance, or on amounts temporarily withheld or retained in accordance with the terms of the contract. The Government and the Contractor shall resolve claims involving disputes, and any interest that may be payable in accordance with the clause at FAR 52.233–1, Disputes.

(5) *Discounts for prompt payment.* The designated payment office will pay an interest penalty automatically, without request from the Contractor, if the Government takes a discount for prompt payment improperly. The Government will calculate the interest penalty in accordance with the prompt payment regulations at 5 CFR part 1315.

(6) *Additional interest penalty.* (i) The designated payment office will pay a penalty amount, calculated in accordance with the prompt payment regulations at 5 CFR part 1315 in addition to the interest penalty amount only if—

(A) The Government owes an interest penalty of $1 or more;

(B) The designated payment office does not pay the interest penalty within 10 days after the date the invoice amount is paid; and

(C) The Contractor makes a written demand to the designated payment office for additional penalty payment, in accordance with paragraph (a)(6)(ii) of this clause, postmarked not later than 40 days after the date the invoice amount is paid.

(ii)(A) The Contractor shall support written demands for additional penalty payments with the following data. The Government will not request any additional data. The Contractor shall—

(*1*) Specifically assert that late payment interest is due under a specific invoice, and request payment of all overdue late payment interest penalty and such additional penalty as may be required;

(*2*) Attach a copy of the invoice on which the unpaid late payment interest was due; and

(*3*) State that payment of the principal has been received, including the date of receipt.

(B) If there is no postmark or the postmark is illegible—

(1) The designated payment office that receives the demand will annotate it with the date of receipt provided the demand is received on or before the 40th day after payment was made; or

(*2*) If the designated payment office fails to make the required annotation, the Government will determine the demand's validity based on the date the Contractor has placed on the demand, provided such date is no later than the 40th day after payment was made.

(b) *Contract financing payments.* If this contract provides for contract financing, the Government will make contract financing payments in accordance with the applicable contract financing clause.

(c) *Subcontract clause requirements.* The Contractor shall include in each subcontract for property or services (including a material supplier) for the purpose of performing this contract the following:

(1) *Prompt payment for subcontractors.* A payment clause that obligates the Contractor to pay the subcontractor for satisfactory performance under its subcontract not later than 7 days from receipt of payment out of such amounts as are paid to the Contractor under this contract.

(2) *Interest for subcontractors.* An interest penalty clause that obligates the Contractor to pay to the subcontractor an interest penalty for each payment not made in accordance with the payment clause—

(i) For the period beginning on the day after the required payment date and ending on the date on which payment of the amount due is made; and

(ii) Computed at the rate of interest established by the Secretary of the Treasury, and published in the **Federal Register,** for interest payments under section 12 of the Contract Disputes Act of 1978 (41

U.S.C. 611) in effect at the time the Contractor accrues the obligation to pay an interest penalty.

(3) *Subcontractor clause flowdown.* A clause requiring each subcontractor to

(i) Include a payment clause and an interest penalty clause conforming to the standards set forth in paragraphs (c)(1) and (c)(2) of this clause in each of its subcontracts; and

(ii) Require each of its subcontractors to include such clauses in their subcontracts with each lower-tier subcontractor or supplier.

(d) *Subcontract clause interpretation.* The clauses required by paragraph (c) of this clause shall not be construed to impair the right of the Contractor or a subcontractor at any tier to negotiate, and to include in their subcontract, provisions that—

(1) *Retainage permitted.* Permit the Contractor or a subcontractor to retain (without cause) a specified percentage of each progress payment otherwise due to a subcontractor for satisfactory performance under the subcontract without incurring any obligation to pay a late payment interest penalty, in accordance with terms and conditions agreed to by the parties to the subcontract, giving such recognition as the parties deem appropriate to the ability of a subcontractor to furnish a performance bond and a payment bond;

(2) *Withholding permitted.* Permit the Contractor or subcontractor to make a determination that part or all of the subcontractor's request for payment may be withheld in accordance with the subcontract agreement; and

(3) *Withholding requirements.* Permit such withholding without incurring any obligation to pay a late payment penalty if—

(i) A notice conforming to the standards of paragraph (g) of this clause previously has been furnished to the subcontractor; and

(ii) The Contractor furnishes to the Contracting Officer a copy of any notice issued by a Contractor pursuant to paragraph (d)(3)(i) of this clause.

(e) *Subcontractor withholding procedures.* If a Contractor, after making a request for payment to the Government but before making a payment to a subcontractor for the subcontractor's performance covered by the payment request, discovers that all or a portion of the payment otherwise due such subcontractor is subject to withholding from the subcontractor in accordance with the subcontract agreement, then the Contractor shall—

(1) *Subcontractor notice.* Furnish to the subcontractor a notice conforming to the standards of paragraph (g) of this clause as soon as practicable upon ascertaining the cause giving rise to a withholding, but prior to the due date for subcontractor payment;

(2) *Contracting Officer notice.* Furnish to the Contracting Officer, as soon as practicable, a copy of the notice furnished to the subcontractor pursuant to paragraph (e)(1) of this clause;

(3) *Subcontractor progress payment reduction.* Reduce the subcontractor's progress payment by an amount not to exceed the amount specified in the notice of withholding furnished under paragraph (e)(1) of this clause;

(4) *Subsequent subcontractor payment.* Pay the subcontractor as soon as practicable after the correction of the identified subcontract performance deficiency, and—

(i) Make such payment within—

(A) Seven days after correction of the identified subcontract performance deficiency (unless the funds therefor must be recovered from the Government because of a reduction under paragraph (e)(5)(i)) of this clause; or

(B) Seven days after the Contractor recovers such funds from the Government; or

(ii) Incur an obligation to pay a late payment interest penalty computed at the rate of interest established by the Secretary of the Treasury, and published in the **Federal Register**, for interest payments under section 12 of the Contracts Disputes Act of 1978 (41 U.S.C. 611) in effect at the time the Contractor accrues the obligation to pay an interest penalty;

(5) *Notice to Contracting Officer.* Notify the Contracting Officer upon—

(i) Reduction of the amount of any subsequent certified application for payment; or

(ii) Payment to the subcontractor of any withheld amounts of a progress payment, specifying—

(A) The amounts withheld under paragraph (e)(1) of this clause; and

(B) The dates that such withholding began and ended; and

(6) *Interest to Government.* Be obligated to pay to the Government an amount equal to interest on

the withheld payments (computed in the manner provided in 31 U.S.C. 3903(c)(1)), from the 8th day after receipt of the withheld amounts from the Government until—

(i) The day the identified subcontractor performance deficiency is corrected; or

(ii) The date that any subsequent payment is reduced under paragraph (e)(5)(i) of this clause.

(f) *Third-party deficiency reports*—(1) *Withholding from subcontractor.* If a Contractor, after making payment to a first-tier subcontractor, receives from a supplier or subcontractor of the first-tier subcontractor (hereafter referred to as a ''second-tier subcontractor'') a written notice in accordance with section 2 of the Act of August 24, 1935 (40 U.S.C. 270b, Miller Act), asserting a deficiency in such first-tier subcontractor's performance under the contract for which the Contractor may be ultimately liable, and the Contractor determines that all or a portion of future payments otherwise due such first-tier subcontractor is subject to withholding in accordance with the subcontract agreement, the Contractor may, without incurring an obligation to pay an interest penalty under paragraph (e)(6) of this clause—

(i) Furnish to the first-tier subcontractor a notice conforming to the standards of paragraph (g) of this clause as soon as practicable upon making such determination; and

(ii) Withhold from the first-tier subcontractor's next available progress payment or payments an amount not to exceed the amount specified in the notice of withholding furnished under paragraph (f)(1)(i) of this clause.

(2) *Subsequent payment or interest charge.* As soon as practicable, but not later than 7 days after receipt of satisfactory written notification that the identified subcontract performance deficiency has been corrected, the Contractor shall—

(i) Pay the amount withheld under paragraph (f)(1)(ii) of this clause to such first-tier subcontractor; or

(ii) Incur an obligation to pay a late payment interest penalty to such first-tier subcontractor computed at the rate of interest established by the Secretary of the Treasury, and published in the **Federal Register**, for interest payments under section 12 of the Contracts Disputes Act of 1978 (41 U.S.C. 611) in effect at the time the Contractor accrues the obligation to pay an interest penalty.

(g) *Written notice of subcontractor withholding.* The Contractor shall issue a written notice of any withholding to a subcontractor (with a copy furnished to the Contracting Officer), specifying—

(1) The amount to be withheld;

(2) The specific causes for the withholding under the terms of the subcontract; and

(3) The remedial actions to be taken by the subcontractor in order to receive payment of the amounts withheld.

(h) *Subcontractor payment entitlement.* The Contractor may not request payment from the Government of any amount withheld or retained in accordance with paragraph (d) of this clause until such time as the Contractor has determined and certified to the Contracting Officer that the subcontractor is entitled to the payment of such amount.

(i) *Prime-subcontractor disputes.* A dispute between the Contractor and subcontractor relating to the amount or entitlement of a subcontractor to a payment or a late payment interest penalty under a clause included in the subcontract pursuant to paragraph (c) of this clause does not constitute a dispute to which the Government is a party. The Government may not be interpleaded in any judicial or administrative proceeding involving such a dispute.

(j) *Preservation of prime-subcontractor rights.* Except as provided in paragraph (i) of this clause, this clause shall not limit or impair any contractual, administrative, or judicial remedies otherwise available to the Contractor or a subcontractor in the event of a dispute involving late payment or nonpayment by the Contractor or deficient subcontract performance or nonperformance by a subcontractor.

(k) *Non-recourse for prime contractor interest penalty.* The Contractor's obligation to pay an interest penalty to a subcontractor pursuant to the clauses included in a subcontract under paragraph (c) of this clause shall not be construed to be an obligation of the Government for such interest penalty. A cost-reimbursement claim may not include any amount for reimbursement of such interest penalty.

(l) *Overpayments.* If the Contractor becomes aware of a duplicate payment or that the Government has otherwise overpaid on an invoice payment, the Contractor shall immediately notify the Contracting Officer and request instructions for disposition of the overpayment.

(End of clause)

82. *FAR 52.232-33 PAYMENT BY ELECTRONIC FUNDS TRANSFER –CENTRAL CONTRACTOR REGISTRATION (MAY 1999)

(a) *Method of payment*. (1) All payments by the Government under this contract shall be made by electronic funds transfer (EFT), except as provided in paragraph (a)(2) of this clause. As used in this clause, the term ''EFT'' refers to the funds transfer and may also include the payment information transfer.

(2) In the event the Government is unable to release one or more payments by EFT, the Contractor agrees to either—

(i) Accept payment by check or some other mutually agreeable method of payment; or

(ii) Request the Government to extend the payment due date until such time as the Government can make payment by EFT (but see paragraph (d) of this clause).

(b) *Contractor's EFT information.* The Government shall make payment to the Contractor using the EFT information contained in the Central Contractor Registration (CCR) database. In the event that the EFT information changes, the Contractor shall be responsible for providing the updated information to the CCR database.

(c) *Mechanisms for EFT payment.* The Government may make payment by EFT through either the Automated Clearing House (ACH) network, subject to the rules of the National Automated Clearing House Association, or the Fedwire Transfer System. The rules governing Federal payments through the ACH are contained in 31 CFR part 210.

(d) *Suspension of payment.* If the Contractor's EFT information in the CCR database is incorrect, then the Government need not make payment to the Contractor under this contract until correct EFT information is entered into the CCR database; and any invoice or contract financing request shall be deemed not to be a proper invoice for the purpose of prompt payment under this contract. The prompt payment terms of the contract regarding notice of an improper invoice and delays in accrual of interest penalties apply.

(e) *Contractor EFT arrangements.* If the Contractor has identified multiple payment receiving points (i.e., more than one remittance address and/or EFT information set) in the CCR database, and the Contractor has not notified the Government of the payment receiving point applicable to this contract, the Government shall make payment to the first payment receiving point (EFT information set or remittance address as applicable) listed in the CCR database.

(f) *Liability for uncompleted or erroneous transfers*. (1) If an uncompleted or erroneous transfer occurs because the Government used
the Contractor's EFT information incorrectly, the Government remains responsible for—

(i) Making a correct payment;

(ii) Paying any prompt payment penalty due; and

(iii) Recovering any erroneously directed funds.

(2) If an uncompleted or erroneous transfer occurs because the Contractor's EFT information was incorrect, or was revised within 30 days of Government release of the EFT payment transaction instruction to the Federal Reserve System, and—

(i) If the funds are no longer under the control of the payment office, the Government is deemed to have made payment and the Contractor is responsible for recovery of any erroneously directed funds; or

(ii) If the funds remain under the control of the payment office, the Government shall not make payment, and the provisions of paragraph (d) of this clause shall apply.

(g) *EFT and prompt payment.* A payment shall be deemed to have been made in a timely manner in accordance with the prompt payment terms of this contract if, in the EFT payment transaction instruction released to the Federal Reserve System, the date specified for settlement of the payment is on or before the prompt payment due date, provided the specified payment date is a valid date under the rules of the Federal Reserve System.

(h) *EFT and assignment of claims.* If the Contractor assigns the proceeds of this contract as provided for in the assignment of claims terms of this contract, the Contractor shall require as a condition of any such assignment, that the assignee shall register in the CCR database and shall be paid by EFT in accordance with the terms of this clause. In all respects, the requirements of this clause shall apply to the assignee as if it were the Contractor. EFT information that shows the ultimate recipient of the transfer to be other than the Contractor, in the absence of a proper assignment of claims acceptable to the Government, is incorrect EFT information within the meaning of

paragraph (d) of this clause.

(i) *Liability for change of EFT information by financial agent*. The Government is not liable for errors resulting from changes to EFT information made by the Contractor's financial agent.

(j) *Payment information.* The payment or disbursing office shall forward to the Contractor available payment information that is suitable for transmission as of the date of release of the EFT instruction to the Federal Reserve System. The Government may request the Contractor to designate a desired format and method(s) for delivery of payment information from a list of formats and methods the payment office is capable of executing. However, the Government does not guarantee that any particular format or method of delivery is available at any particular payment office and retains the latitude to use the format and delivery method most convenient to the Government. If the Government makes payment by check in accordance with paragraph (a) of this clause, the Government shall mail the payment information to the remittance address contained in the CCR database.
(End of Clause)

83. DFARS 252.232-7004 DOD PROGRESS PAYMENT RATES (OCT 2001)

(a) If the contractor is a small business concern, the Progress Payments clause of this contract is modified to change each mention of the progress payment rate and liquidation rate (excepting paragraph (k), *Limitations on Undefinitized Contract Actions*) to 90 percent.

(b) If the contractor is a small disadvantaged business concern, the Progress Payments clause of this contract is modified to change each mention of the progress payment rate and liquidation rate (excepting paragraph (k), *Limitations on Undefinitized Contract Actions*) to 95 percent.
(End of clause)

84. DFARS 252.232-7005 REIMBURSEMENT OF SUBCONTRACTOR ADVANCE PAYMENTS--DOD PILOT MENTOR-PROTEGE PROGRAM (SEP 2001)

(a) The Government will reimburse the Contractor for any advance payments made by the Contractor, as a mentor firm, to a protege firm, pursuant to an approved mentor-protege agreement, provided-

(1) The Contractor's subcontract with the protege firm includes a provision substantially the same as FAR 52.232-12, Advance Payments;

(2) The Contractor has administered the advance payments in accordance with the policies of FAR Subpart 32.4; and

(3) The Contractor agrees that any financial loss resulting from the failure or inability of the protege firm to repay any unliquidated advance payments is the sole financial responsibility of the Contractor.

(b) For a fixed price type contract, advance payments made to a protege firm shall be paid and administered as if they were 100 percent progress payments. The Contractor shall include as a separate attachment with each Standard Form (SF) 1443, Contractor's Request for Progress Payment, a request for reimbursement of advance payments made to a protege firm. The attachment shall provide a separate calculation of lines 14a through 14e of SF 1443 for each protege, reflecting the status of advance payments made to that protege.

(c) For cost reimbursable contracts, reimbursement of advance payments shall be made via public voucher. The Contractor shall show the amounts of advance payments made to each protege on the public voucher, in the form and detail directed by the cognizant contracting officer or contract auditor.
(End of clause)

85. *FAR 52.233-1 DISPUTES (DEC 1998)

(a) This contract is subject to the Contract Disputes Act of 1978, as amended (41 U.S.C. 601-613).

(b) Except as provided in the Act, all disputes arising under or relating to this contract shall be resolved under this clause.

(c) 'Claim,' as used in this clause, means a written demand or written assertion by one of the contracting parties seeking, as a matter of right, the payment of money in a sum certain, the adjustment or interpretation of contract terms, or other relief arising under or relating to this contract. A claim arising under a contract, unlike a claim relating to that contract, is a claim that can be resolved under a contract clause that provides for the relief sought by the claimant. However, a written demand or written assertion by the Contractor seeking the payment of money exceeding $100,000 is not a claim under the Act until certified as required by subparagraph (d)(2) of this clause. A voucher, invoice, or other routine request for payment that is not in dispute when submitted is not a claim under the Act. The submission may be converted to a claim under the Act, by complying with the submission and certification requirements of this clause, if it is disputed either as to liability or amount or is not acted upon in a reasonable time.

(d)(1) A claim by the Contractor shall be made in writing and, unless otherwise stated in this contract, submitted within 6 years after accrual of the claim to the Contracting Officer for a written decision. A claim by the Government against the Contractor shall be subject to a written decision by the Contracting Officer.

(2) (i) Contractors shall provide the certification specified in paragraph (d)(2)(iii) of this clause when submitting any claim exceeding $100,000.

(ii) The certification requirement does not apply to issues in controversy that have not been submitted as all or part of a claim.

(iii) The certification shall state as follows:

'I certify that the claim is made in good faith; that the supporting data are accurate and complete to the best of my knowledge and belief; that the amount requested accurately reflects the contract adjustment for which the Contractor believes the Government is liable; and that I am duly authorized to certify the claim on behalf of the Contractor.'

(3) The certification may be executed by any person duly authorized to bind the Contractor with respect to the claim.

(e) For Contractor claims of $100,000 or less, the Contracting Officer must, if requested in writing by the Contractor, render a decision within 60 days of the request. For Contractor-certified claims over $100,000, the Contracting Officer must, within 60 days, decide the claim or notify the Contractor of the date by which the decision will be made.

(f) The Contracting Officer's decision shall be final unless the Contractor appeals or files a suit as provided in the Act.

(g) If the claim by the Contractor is submitted to the Contracting Officer or a claim by the Government is presented to the Contractor, the parties, by mutual consent, may agree to use alternative dispute resolution (ADR). If the Contractor refuses an offer for ADR, the Contractor shall inform the Contracting Officer, in writing, of the Contractor's specific reasons for rejecting the offer.

(h) The Government shall pay interest on the amount found due and unpaid from (1) the date the Contracting Officer receives the claim (certified if required), or (2) the date that payment otherwise would be due, if that date is later, until the date of payment. With regard to claims having defective certifications, as defined in (FAR) 48 CFR 33.201, interest shall be paid from the date that the Contracting Officer initially receives the claim. Simple interest on claims shall be paid at the rate, fixed by the Secretary of the Treasury as provided in the Act, which is applicable to the period during which the Contracting Officer receives the claim and then at the rate applicable for each 6-month period as fixed by the Treasury Secretary during the pendency of the claim.

(i) The Contractor shall proceed diligently with performance of this contract, pending final resolution of any request for relief, claim, appeal, or action arising under the contract, and comply with any decision of the Contracting Officer.

86. *FAR 52.233-3 PROTEST AFTER AWARD (AUG 1996)

(a) Upon receipt of a notice of protest (as defined in FAR 33.101) or a determination that a protest is likely (see FAR 33.102(d)), the Contracting Officer may, by written order to the Contractor, direct the Contractor to stop performance of the work called for by this contract. The order shall be specifically identified as a stop-work order issued under this clause. Upon receipt of the order, the Contractor shall immediately comply with its terms and take

all reasonable steps to minimize the incurrence of costs allocable to the work covered by the order during the period of work stoppage. Upon receipt of the final decision in the protest, the Contracting Officer shall either--

(1) Cancel the stop-work order; or

(2) Terminate the work covered by the order as provided in the Default, or the Termination for Convenience of the Government, clause of this contract.

(b) If a stop-work order issued under this clause is canceled either before or after a final decision in the protest, the Contractor shall resume work. The Contracting Officer shall make an equitable adjustment in the delivery schedule or contract price, or both, and the contract shall be modified, in writing, accordingly, if--

(1) The stop-work order results in an increase in the time required for, or in the Contractor's cost properly allocable to, the performance of any part of this contract; and

(2) The Contractor asserts its right to an adjustment within 30 days after the end of the period of work stoppage; provided, that if the Contracting Officer decides the facts justify the action, the Contracting Officer may receive and act upon a proposal at any time before final payment under this contract.

(c) If a stop-work order is not canceled and the work covered by the order is terminated for the convenience of the Government, the Contracting Officer shall allow reasonable costs resulting from the stop-work order in arriving at the termination settlement.

(d) If a stop-work order is not canceled and the work covered by the order is terminated for default, the Contracting Officer shall allow, by equitable adjustment or otherwise, reasonable costs resulting from the stop-work order.

(e) The Government's rights to terminate this contract at any time are not affected by action taken under this clause.

(f) If, as the result of the Contractor's intentional or negligent misstatement, misrepresentation, or miscertification, a protest related to this contract is sustained, and the Government pays costs, as provided in FAR 33.102(b)(2) or 33.104(h)(1), the Government may require the Contractor to reimburse the Government the amount of such costs. In addition to any other remedy available, and pursuant to the requirements of Subpart 32.6, the Government may collect this debt by offsetting the amount against any payment due the Contractor under any contract between the Contractor and the Government.

87. RESERVED

88. FAR 52.236-2 DIFFERING SITE CONDITIONS (APR 1984)

(a) The Contractor shall promptly, and before the conditions are disturbed, give a written notice to the Contracting Officer of

(1) subsurface or latent physical conditions at the site which differ materially from those indicated in this contract, or

(2) unknown physical conditions at the site, of an unusual nature, which differ materially from those ordinarily encountered and generally recognized as inhering in work of the character provided for in the contract.

(b) The Contracting Officer shall investigate the site conditions promptly after receiving the notice. If the conditions do materially so differ and cause an increase or decrease in the Contractor's cost of, or the time required for, performing any part of the work under this contract, whether or not changed as a result of the conditions, an equitable adjustment shall be made under this clause and the contract modified in writing accordingly.

(c) No request by the Contractor for an equitable adjustment to the contract under this clause shall be allowed, unless the Contractor has given the written notice required, provided, that the time prescribed in (a) above for giving written notice may be extended by the Contracting Officer.

(d) No request by the Contractor for an equitable adjustment to the contract for differing site conditions shall be allowed if made after final payment under this contract.

89. *FAR 52.236-3 SITE INVESTIGATION AND CONDITIONS AFFECTING THE WORK (APR

1984)

(a) The Contractor acknowledges that it has taken steps reasonably necessary to ascertain the nature and location of the work, and that it has investigated and satisfied itself as to the general and local conditions which can affect the work or its cost, including but not limited to

(1) conditions bearing upon transportation, disposal, handling, and storage of materials;
(2) the availability of labor, water, electric power, and roads;
(3) uncertainties of weather, river stages, tides, or similar physical conditions at the site;
(4) the conformation and conditions of the ground; and
(5) the character of equipment and facilities needed preliminary to and during work performance.

The Contractor also acknowledges that it has satisfied itself as to the character, quality, and quantity of surface and subsurface materials or obstacles to be encountered insofar as this information is reasonably ascertainable from an inspection of the site, including all exploratory work done by the Government, as well as from the drawings and specifications made a part of this contract. Any failure of the Contractor to take the actions described and acknowledged in this paragraph will not relieve the Contractor from responsibility for estimating properly the difficulty and cost of successfully performing the work, or for proceeding to successfully perform the work without additional expense to the Government.

(b) The Government assumes no responsibility for any conclusions or interpretations made by the Contractor based on the information made available by the Government. Nor does the Government assume responsibility for any understanding reached or representation made concerning conditions which can affect the work by any of its officers or agents before the execution of this contract, unless that understanding or representation is expressly stated in this contract.

90. *FAR 52.236-5 MATERIAL AND WORKMANSHIP (APR 1984)

(a) All equipment, material, and articles incorporated into the work covered by this contract shall be new and of the most suitable grade for the purpose intended, unless otherwise specifically provided in this contract. References in the specifications to equipment, material, articles, or patented processes by trade name, make, or catalog number, shall be regarded as establishing a standard of quality and shall not be construed as limiting competition. The Contractor may, at its option, use any equipment, material, article, or process that, in the judgment of the Contracting Officer, is equal to that named in the specifications, unless otherwise specifically provided in this contract.

(b) The Contractor shall obtain the Contracting Officer's approval of the machinery and mechanical and other equipment to be incorporated into the work. When requesting approval, the Contractor shall furnish to the Contracting Officer the name of the manufacturer, the model number, and other information concerning the performance, capacity, nature, and rating of the machinery and mechanical and other equipment. When required by this contract or by the Contracting Officer, the Contractor shall also obtain the Contracting Officer's approval of the material or articles which the Contractor contemplates incorporating into the work. When requesting approval, the Contractor shall provide full information concerning the material or articles. When directed to do so, the Contractor shall submit samples for approval at the Contractor's expense, with all shipping charges prepaid. Machinery, equipment, material, and articles that do not have the required approval shall be installed or used at the risk of subsequent rejection.

(c) All work under this contract shall be performed in a skillful and workmanlike manner. The Contracting Officer may require, in writing, that the Contractor remove from the work any employee the Contracting Officer deems incompetent, careless, or otherwise objectionable.

91. *FAR 52.232-33 PAYMENT BY ELECTRONIC FUNDS TRANSFER –CENTRAL CONTRACTOR REGISTRATION (MAY 1999)

(a) *Method of payment*. (1) All payments by the Government under this contract shall be made by electronic funds transfer (EFT), except as provided in paragraph (a)(2) of this clause. As used in this clause, the term ‘‘EFT’’ refers to the funds transfer and may also include the payment information transfer.

(2) In the event the Government is unable to release one or more payments by EFT, the Contractor agrees to either—

(i) Accept payment by check or some other mutually agreeable method of payment; or

(ii) Request the Government to extend the payment due date until such time as the Government can make payment by EFT (but see paragraph (d) of this clause).

(b) *Contractor's EFT information.* The Government shall make payment to the Contractor using the EFT information contained in the Central Contractor Registration (CCR) database. In the event that the EFT information changes, the Contractor shall be responsible for providing the updated information to the CCR database.

(c) *Mechanisms for EFT payment.* The Government may make payment by EFT through either the Automated Clearing House (ACH) network, subject to the rules of the National Automated Clearing House Association, or the Fedwire Transfer System. The rules governing Federal payments through the ACH are contained in 31 CFR part 210.

(d) *Suspension of payment.* If the Contractor's EFT information in the CCR database is incorrect, then the Government need not make payment to the Contractor under this contract until correct EFT information is entered into the CCR database; and any invoice or contract financing request shall be deemed not to be a proper invoice for the purpose of prompt payment under this contract. The prompt payment terms of the contract regarding notice of an improper invoice and delays in accrual of interest penalties apply.

(e) *Contractor EFT arrangements.* If the Contractor has identified multiple payment receiving points (i.e., more than one remittance address and/or EFT information set) in the CCR database, and the Contractor has not notified the Government of the payment receiving point applicable to this contract, the Government shall make payment to the first payment receiving point (EFT information set or remittance address as applicable) listed in the CCR database.

(f) *Liability for uncompleted or erroneous transfers*. (1) If an uncompleted or erroneous transfer occurs because the Government used
the Contractor's EFT information incorrectly, the Government remains responsible for—

(i) Making a correct payment;

(ii) Paying any prompt payment penalty due; and

(iii) Recovering any erroneously directed funds.

(2) If an uncompleted or erroneous transfer occurs because the Contractor's EFT information was incorrect, or was revised within 30 days of Government release of the EFT payment transaction instruction to the Federal Reserve System, and—

(i) If the funds are no longer under the control of the payment office, the Government is deemed to have made payment and the Contractor is responsible for recovery of any erroneously directed funds; or

(ii) If the funds remain under the control of the payment office, the Government shall not make payment, and the provisions of paragraph (d) of this clause shall apply.

(g) *EFT and prompt payment.* A payment shall be deemed to have been made in a timely manner in accordance with the prompt payment terms of this contract if, in the EFT payment transaction instruction released to the Federal Reserve System, the date specified for settlement of the payment is on or before the prompt payment due date, provided the specified payment date is a valid date under the rules of the Federal Reserve System.

(h) *EFT and assignment of claims.* If the Contractor assigns the proceeds of this contract as provided for in the assignment of claims terms of this contract, the Contractor shall require as a condition of any such assignment, that the assignee shall register in the CCR database and shall be paid by EFT in accordance with the terms of this clause. In all respects, the requirements of this clause shall apply to the assignee as if it were the Contractor. EFT information that shows the ultimate recipient of the transfer to be other than the Contractor, in the absence of a proper assignment of claims acceptable to the Government, is incorrect EFT information within the meaning of paragraph (d) of this clause.

(i) *Liability for change of EFT information by financial agent.* The Government is not liable for errors resulting from changes to EFT information made by the Contractor's financial agent.

(j) *Payment information.* The payment or disbursing office shall forward to the Contractor available payment information that is suitable for transmission as of the date of release of the EFT instruction to the Federal Reserve System. The Government may request the Contractor to designate a desired format and method(s) for delivery of payment information from a list of formats and methods the payment office is capable of executing.

However, the Government does not guarantee that any particular format or method of delivery is available at any particular payment office and retains the latitude to use the format and delivery method most convenient to the Government. If the Government makes payment by check in accordance with paragraph (a) of this clause, the Government shall mail the payment information to the remittance address contained in the CCR database.
(End of Clause)

92. *FAR 52.236-6 SUPERINTENDENCE BY THE CONTRACTOR (APR 1984)

At all times during performance of this contract and until the work is completed and accepted, the Contractor shall directly superintend the work or assign and have on the work site a competent superintendent who is satisfactory to the Contracting Officer and has authority to act for the Contractor.

93. FAR 52.236-7 PERMITS AND RESPONSIBILITIES (NOV 1991)

The Contractor shall, without additional expense to the Government, be responsible for obtaining any necessary licenses and permits, and for complying with any Federal, State, and municipal laws, codes, and regulations applicable to the performance of the work. The Contractor shall also be responsible for all damages to persons or property that occur as a result of the Contractor's fault or negligence. The Contractor shall also be responsible for all materials delivered and work performed until completion and acceptance of the entire work, except for any completed unit of work which may have been accepted under the contract.

94. *FAR 52.236-8 OTHER CONTRACTS (APR 1984)

The Government may undertake or award other contracts for additional work at or near the site of the work under this contract. The Contractor shall fully cooperate with the other contractors and with Government employees and shall carefully adapt scheduling and performing the work under this contract to accommodate the additional work, heeding any direction that may be provided by the Contracting Officer. The Contractor shall not commit or permit any act that will interfere with the performance of work by any other contractor or by Government employees.

95. *FAR 52.236-9 PROTECTION OF EXISTING VEGETATION, STRUCTURES, EQUIPMENT, UTILITIES, AND IMPROVEMENTS (APR 1984)

(a) The Contractor shall preserve and protect all structures, equipment, and vegetation (such as trees, shrubs, and grass) on or adjacent to the work site, which are not to be removed and which do not unreasonably interfere with the work required under this contract. The Contractor shall only remove trees when specifically authorized to do so, and shall avoid damaging vegetation that will remain in place. If any limbs or branches of trees are broken during contract performance, or by the careless operation of equipment, or by workmen, the Contractor shall trim those limbs or branches with a clean cut and paint the cut with a tree-pruning compound as directed by the Contracting Officer.

(b) The Contractor shall protect from damage all existing improvements and utilities

(1) at or near the work site, and

(2) on adjacent property of a third party, the locations of which are made known to or should be known by the Contractor. The Contractor shall repair any damage to those facilities, including those that are the property of a third party, resulting from failure to comply with the requirements of this contract or failure to exercise reasonable care in performing the work. If the Contractor fails or refused to repair the damage promptly, the Contracting Officer may have the necessary work performed and charge the cost to the Contractor.

96. *FAR 52.236-10 OPERATIONS AND STORAGE AREAS (APR 1984)

(a) The Contractor shall confine all operations (including storage of materials) on Government premises to areas authorized or approved by the Contracting Officer. The Contractor shall hold and save the Government, its officers and agents, free and harmless from liability of any nature occasioned by the Contractor's performance.

(b) Temporary buildings (e.g., storage sheds, shops, offices) and utilities may be erected by the Contractor only with the approval of the Contracting Officer and shall be built with labor and materials furnished by the Contractor without expense to the Government. The temporary buildings and utilities shall remain the property of the Contractor and shall be removed by the Contractor at its expense upon completion of the work. With the written consent of the Contracting Officer, the buildings and utilities may be abandoned and need not be removed.

(c) The Contractor shall, under regulations prescribed by the Contracting Officer, use only established roadways, or use temporary roadways constructed by the Contractor when and as authorized by the Contracting Officer. When materials are transported in prosecuting the work, vehicles shall not be loaded beyond the loading capacity recommended by the manufacturer of the vehicle or prescribed by any Federal, State, or local law or regulation. When it is necessary to cross curbs or sidewalks, the Contractor shall protect them from damage. The Contractor shall repair or pay for the repair of any damaged curbs, sidewalks, or roads.

97. *FAR 52.236-11 USE AND POSSESSION PRIOR TO COMPLETION (APR 1984)

(a) The Government shall have the right to take possession of or use any completed or partially completed part of the work. Before taking possession of or using any work, the Contracting Officer shall furnish the Contractor a list of items of work remaining to be performed or corrected on those portions of the work that the Government intends to take possession of or use. However, failure of the Contracting Officer to list any item of work shall not relieve the Contractor of responsibility for complying with the terms of the contract. The Government's possession or use shall not be deemed an acceptance of any work under the contract.

(b) While the Government has such possession or use, the Contractor shall be relieved of the responsibility for the loss of or damage to the work resulting from the Government's possession or use, notwithstanding the terms of the clause in this contract entitled "Permits and Responsibilities." If prior possession or use by the Government delays the progress of the work or causes additional expense to the Contractor, an equitable adjustment shall be made in the contract price or the time of completion, and the contract shall be modified in writing accordingly.

98. *FAR 52.236-12 CLEANING UP (APR 1984)

The Contractor shall at all times keep the work area, including storage areas, free from accumulations of waste materials. Before completing the work, the Contractor shall remove from the work and premises any rubbish, tools, scaffolding, equipment, and materials that are not the property of the Government. Upon completing the work, the Contractor shall leave the work area in a clean, neat, and orderly condition satisfactory to the Contracting Officer.

99. *FAR 52.236-13 ACCIDENT PREVENTION-ALTERNATE I (NOV 1991)

(a) The Contractor shall provide and maintain work environments and procedures which will (1) safeguard the public and Government personnel, property, materials, supplies, and equipment exposed to Contractor operations and activities; (2) avoid interruptions of Government operations and delays in project completion dates; and (3) control costs in the performance of this contract.

(b) For these purposes on contracts for construction or dismantling, demolition, or removal of improvements, the Contractor shall--

(1) Provide appropriate safety barricades, signs, and signal lights;

(2) Comply with the standards issued by the Secretary of Labor at 29 CFR Part 1926 and 29 CFR Part 1910; and

(3) Ensure that any additional measures the Contracting Officer determines to be reasonably necessary for the purposes are taken.

(c) If this contract is for construction or dismantling, demolition or removal of improvements with any Department of Defense agency or component, the Contractor shall comply with all pertinent provisions of the latest version of U.S. Army Corps of engineers Safety and Health Requirements Manual, EM 385-1-1, in effect on the date of the solicitation.

(d) Whenever the Contracting Officer becomes aware of any noncompliance with these requirements or any condition which poses a serious or imminent danger to the health or safety of the public or Government personnel, the Contracting Officer shall notify the Contractor orally, with written confirmation, and request immediate initiation of corrective action. This notice, when delivered to the Contractor or the Contractor's representative at the work site, shall be deemed sufficient notice of the noncompliance and that corrective action is required. After receiving the notice, the Contractor shall immediately take corrective action. If the Contractor fails or refuses to promptly take corrective action, the Contracting Officer may issue an order stopping all or part of the work until satisfactory corrective action has been taken. The Contractor shall not be entitled to any equitable adjustment of the contract price or extension of the performance schedule on any stop work order issued under this clause.

(e) The Contractor shall insert this clause, including this paragraph (e), with appropriate changes in the designation of the parties, in subcontractors.

(f) Before commencing the work, the Contractor shall--

(1) Submit a written proposed plan for implementing this clause. The plan shall include an analysis of the significant hazards to life, limb, and property inherent in contract work performance and a plan for controlling these hazards; and

(2) Meet with representatives of the Contracting Officer to discuss and develop a mutual understanding relative to administration of the overall safety program.

100.*FAR 52.236-14 AVAILABILITY AND USE OF UTILITY SERVICES (APR 1984)

(a) The Government shall make all reasonably required amounts of utilities available to the Contractor from existing outlets and supplies, as specified in the contract. Unless otherwise provided in the contract, the amount of each utility service consumed shall be charged to or paid for by the Contractor at prevailing rates charged to the Government or, where the utility is produced by the Government, at reasonable rates determined by the Contracting Officer. The Contractor shall carefully conserve any utilities furnished without charge.

(b) The Contractor, at its expense and in a workmanlike manner satisfactory to the Contracting Officer, shall install and maintain all necessary temporary connections and distribution lines, and all meters required to measure the amount of each utility used for the purpose of determining charges. Before final acceptance of the work by the Government, the Contractor shall remove all the temporary connections, distribution lines, meters, and associated paraphernalia.

101.FAR 52.236-15 SCHEDULES FOR CONSTRUCTION CONTRACTS (APR 1984)

(a) The Contractor shall, within five days after the work commences on the contract or another period of time determined by the Contracting Officer, prepare and submit to the Contracting Officer for approval three copies of a practicable schedule showing the order in which the Contractor proposes to perform the work, and the dates on which the Contractor contemplates starting and completing the several salient features of the work (including acquiring materials, plant, and equipment). The schedule shall be in the form of a progress chart of suitable scale to indicate appropriately the percentage of work scheduled for completion by any given date during the period. If the Contractor fails to submit a schedule within the time prescribed, the Contracting Officer may withhold approval of progress payments until the Contractor submits the required schedule.

(b) The Contractor shall enter the actual progress on the chart as directed by the Contracting Officer, and upon doing so shall immediately deliver three copies of the annotated schedule to the Contracting Officer. If, in the opinion of the Contracting Officer, the Contractor falls behind the approved schedule, the Contractor shall take steps necessary to improve its progress, including those that may be required by the Contracting Officer, without additional cost to the Government. In this circumstance, the Contracting Officer may require the Contractor to increase the number of shifts, overtime operations, days of work, and/or the amount of construction plant, and to submit for approval any supplementary schedule or schedules in chart form as the Contracting Officer deems necessary to demonstrate how the approved rate of progress will be regained.

(c) Failure of the Contractor to comply with the requirements of the Contracting Officer under this clause shall be grounds for a determination by the Contracting Officer that the Contractor is not prosecuting the work with sufficient diligence to ensure completion within the time specified in the contract. Upon making this determination, the Contracting Officer may terminate the Contractor's right to proceed with the work, or any separable part of it, in accordance with the default terms of this contract.

102.*FAR 52.236-17 LAYOUT OF WORK (APR 1984)

The Contractor shall lay out its work from Government-established base lines and bench marks indicated on the drawings, and shall be responsible for all measurements in connection with the layout. The Contractor shall furnish, at its own expense, all stakes, templates, platforms, equipment, tools, materials, and labor required to lay out any part of the work. The Contractor shall be responsible for executing the work to the lines and grades that may be established or indicated by the Contracting Officer. The Contractor shall also be responsible for maintaining and preserving all stakes and other marks established by the Contracting Officer until authorized to remove them. If such marks are destroyed by the Contractor or through its negligence before their removal is authorized, the Contracting Officer may replace them and deduct the expense of the replacement from any amounts due or to become due to the Contractor.

103.FAR 52.236-21 SPECIFICATIONS AND DRAWINGS FOR CONSTRUCTION (FEB 1997)

(a) The Contractor shall keep on the work site a copy of the drawings and specifications and shall at all times give the Contracting Officer access thereto. Anything mentioned in the specifications and not shown on the drawings, or shown on the drawings and not mentioned in the specifications, shall be of like effect as if shown or mentioned in both. In case of difference between drawings and specifications, the specifications shall govern. In case of discrepancy in the figures, in the drawings, or in the specifications, the matter shall be promptly submitted to the Contracting Officer, who shall promptly make a determination in writing. Any adjustment by the Contractor without such a determination shall be at its own risk and expense. The Contracting Officer shall furnish from time to time such detailed drawings and other information as considered necessary, unless otherwise provided.

(b) Wherever in the specifications or upon the drawings the words "directed," "required," "ordered," "designated," "prescribed," or words of like import are used, it shall be understood that the "direction," "requirement," "order," "designation," or "prescription," of the Contracting Officer is intended and similarly the words "approved," "acceptable," "satisfactory," or words of like import shall mean "approved by," or "acceptable to," or "satisfactory to" the Contracting Officer, unless otherwise expressly stated.

(c) Where "as shown," "as indicated," "as detailed," or words of similar import are used, it shall be understood that the reference is made to the drawings accompanying this contract unless stated otherwise. The word "provided" as used herein shall be understood to mean "provide complete in place," that is "furnished and installed."

(d) Shop drawings means drawings, submitted to the Government by the Contractor, subcontractor, or any lower tier subcontractor pursuant to a construction contract, showing in detail

(1) the proposed fabrication and assembly of structural elements, and

(2) the installation (i.e., fit, and attachment details) of materials or equipment. It includes drawings, diagrams, layouts, schematics, descriptive literature, illustrations, schedules, performance and test data, and similar materials furnished by the Contractor to explain in detail specific portions of the work required by the

contract. The Government may duplicate, use, and disclose in any manner and for any purpose shop drawings delivered under this contract.

(e) If this contract requires shop drawings, the Contractor shall coordinate all such drawings, and review them for accuracy, completeness, and compliance with contract requirements and shall indicate its approval thereon as evidence of such coordination and review. Shop drawings submitted to the Contracting Officer without evidence of the Contractor's approval may be returned for resubmission. The Contracting Officer will indicate an approval or disapproval of the shop drawings and if not approved as submitted shall indicate the Government's reasons therefor. Any work done before such approval shall be at the Contractor's risk. Approval by the Contracting Officer shall not relieve the Contractor from responsibility for any errors or omissions in such drawings, nor from responsibility for complying with the requirements of this contract, except with respect to variations described and approved in accordance with (f) below.

(f) If shop drawings show variations from the contract requirements, the Contractor shall describe such variations in writing, separate from the drawings, at the time of submission. If the Contracting Officer approves any such variation, the Contracting Officer shall issue an appropriate contract modification, except that, if the variation is minor or does not involve a change in price or in time of performance, a modification need not be issued.

(g) The Contractor shall submit to the Contracting Officer for approval four copies (unless otherwise indicated) of all shop drawings as called for under the various headings of these specifications. Three sets (unless otherwise indicated) of all shop drawings, will be retained by the Contracting Officer and one set will be returned to the Contractor.

104. *FAR 52.236-26 PRECONSTRUCTION CONFERENCE (FEB 1995)

If the Contracting Officer decides to conduct a preconstruction conference, the successful offeror will be notified and will be required to attend. The Contracting Officer's notification will include specific details regarding the date, time, and location of the conference, any need for attendance by subcontractors, and information regarding the items to be discussed.

105. DFARS 252.236-7000 MODIFICATION OF PROPOSALS - PRICE BREAKDOWN (DEC 1991)

(a) The Contractor shall furnish a price breakdown, itemized as required and within the time specified by the Contracting Officer, with any proposal for a contract modification.

(b) The price breakdown--

(1) Must include sufficient detail to permit an analysis of profit, and of all costs for--

(i) Material;

(ii) Labor,

(iii) Equipment;

(iv) Subcontracts; and

(2) Most cover all work involved in the modification, whether the work was deleted, added, or changed.

(c) The Contractor shall provide similar price breakdowns to support any amounts claimed for subcontracts.

(d) The Contractor's proposal shall include a justification for any time extension proposed.

106. DFARS 252.236-7008 CONTRACT PRICES - BIDDING SCHEDULES (DEC 1991)

(a) The Government's payment for the items listed in the Bidding Schedule shall constitute full compensation to the Contractor for--

(1) Furnishing all plant, labor, equipment, appliances, and materials; and

(2) Performing all operations required to complete the work in conformity with the drawings and specifications.

(b) The Contractor shall include in the prices for the items listed in the Bidding Schedule all costs for work in the specifications, whether or not specifically listed in the Bidding Schedule.

107. *FAR 52.242-13 BANKRUPTCY (JUL 1995)

In the event the Contractor enters into proceedings relating to bankruptcy, whether voluntary or involuntary, the Contractor agrees to furnish, by certified mail or electronic commerce method authorized by the contract, written notification of the bankruptcy to the Contracting Officer responsible for administering the contract. This notification shall be furnished within five days of the initiation of the proceedings relating to bankruptcy filing. This notification shall include the date on which the bankruptcy petition was filed, the identity of the court in which the bankruptcy petition was filed, and a listing of Government contract numbers and contracting offices for all Government contracts against which final payment has not been made. This obligation remains in effect until final payment under this contract.

108. *FAR 52.242-14 SUSPENSION OF WORK (APR 1984)

(a) The Contracting Officer may order the Contractor, in writing, to suspend, delay, or interrupt all or any part of the work of this contract for the period of time that the Contracting Officer determines appropriate for the convenience of the Government.

(b) If the performance of all or any part of the work is, for an unreasonable period of time, suspended, delayed, or interrupted (1) by an act of the Contracting Officer in the administration of this contract, or (2) by the Contracting Officer's failure to act within the time specified in this contract (or within a reasonable time if not specified), an adjustment shall be made for any increase in the cost of performance of this contract (excluding profit) necessarily caused by the unreasonable suspension, delay, or interruption, and the contract modified in writing accordingly. However, no adjustment shall be made under this clause for any suspension, delay, or interruption to the extent that performance would have been so suspended, delayed, or interrupted by any other cause, including the fault or negligence of the Contractor, or for which an equitable adjustment is provided for or excluded under any other term or condition of this contract.

(c) A claim under this clause shall not be allowed (1) for any costs incurred more than 20 days before the Contractor shall have notified the Contracting Officer in writing of the act or failure to act involved (but this requirement shall not apply as to a claim resulting from a suspension order), and (2) unless the claim, in an amount stated, is asserted in writing as soon as practicable after the termination of the suspension, delay, or interruption, but not later than the date of final payment under the contract.

109. FAR 52.243-4 CHANGES (AUG 1987)

(a) The Contracting Officer may, at any time, without notice to the sureties, if any, by written order designated or indicated to be a change order, make changes in the work within the general scope of the contract, including changes--

(1) In the specifications (including drawings and designs);
(2) In the method or manner of performance of the work;
(3) In the Government-furnished facilities, equipment, materials, services, or site; or
(4) Directing acceleration in the performance of the work.

(b) Any other written or oral order (which, as used in this paragraph (b), includes direction, instruction, interpretation, or determination) from the Contracting Officer that causes a change shall be treated as a change order under this clause; provided, that the Contractor gives the Contracting Officer written notice stating

(1) the date, circumstances, and source of the order and
(2) that the Contractor regards the order as a change order.

(c) Except as provided in this clause, no order, statement, or conduct of the Contracting Officer shall be treated as a change under this clause or entitle the Contractor to an equitable adjustment.

(d) If any change under this clause causes an increase or decrease in the Contractor's cost of, or the time required for, the performance of any part of the work under this contract, whether or not changed by any such order, the Contracting Officer shall make an equitable adjustment and modify the contract in writing. However, except for an adjustment based on defective specifications, no adjustment for any change under paragraph (b) of this clause shall be made for any costs incurred more than 20 days before the Contractor gives written notice as required. In the case of defective specifications for which the Government is responsible, the equitable adjustment shall include any increased cost reasonably incurred by the Contractor in attempting to comply with the defective specifications.

(e) The Contractor must assert its right to an adjustment under this clause within 30 days after

(1) receipt of a written change order under paragraph (a) of this clause or

(2) the furnishing of a written notice under paragraph (b) of this clause, by submitting to the Contracting Officer a written statement describing the general nature and amount of the proposal, unless this period is extended by the Government. The statement of proposal for adjustment may be included in the notice under paragraph (b) above.

(f) No proposal by the Contractor for an equitable adjustment shall be allowed if asserted after final payment under this contract.

110. DFARS 252.243-7001 PRICING OF CONTRACT MODIFICATIONS (DEC 1991)

When costs are a factor in any price adjustment under this contract, the contract cost principles and procedures in FAR Part 31 and DFARS Part 231, in effect on the date of this contract, apply.

111. DFARS 252.243-7002 REQUESTS FOR EQUITABLE ADJUSTMENT (MAR 1998)

(a) The amount of any request for equitable adjustment to contract terms shall accurately reflect the contract adjustment for which the Contractor believes the Government is liable. The request shall include only costs for performing the change, and shall not include any costs that already have been reimbursed or that have been separately claimed. All indirect costs included in the request shall be properly allocable to the change in accordance with applicable acquisition regulations.

(b)In accordance with 10 U.S.C. 2410(a), any request for equitable adjustment to contract terms that exceeds the simplified acquisition threshold shall bear, at the time of submission, the following certificate executed by an individual authorized to certify the request on behalf of the Contractor:
I certify that the request is made in good faith, and that the supporting data are accurate and complete to the best of may knowledge and belief.

(Official's Name)

(Title)

(c) The certification in paragraph (b) of this clause requires full disclosure of all relevant facts, including--

(1) Cost or pricing data if required in accordance with subsection 15.403-4 of the Federal Acquisition Regulation; and

(2) Information other than cost or pricing data, in accordance with subsection 15.403-3 of the FAR, including actual cost data and data to support any estimated costs, even if cost or pricing data are not required.

(d) The certification requirement in paragraph (b) of this clause does not apply to----

(1) Requests for routine contract payments; for example, requests for payment for accepted supplies and services, routine vouchers under a cost-reimbursement type contract, or progress payment invoices; or

(2) Final adjustment under an incentive provision of the contract.

(End of clause)

112. *FAR 52.244-2 SUBCONTRACTS (AUG 1998)

(a) Definitions. As used in this clause--

"Approved purchasing system" means a Contractor's purchasing system that has been reviewed and approved in accordance with Part 44 of the Federal Acquistion Regulation (FAR).

"Consent of subcontract" means the Contracting Officer's written consent for the Contractor to enter into a particular subcontract.

"Subcontract," means any contract, as defined in FAR Subpart 2.1, entered into by a subcontractor to furnish supplies or sevices for performance of the the prime contract or a subcontract. It includes, but is not limited to purchase orders, and changes and modifications to purchase orders.

(b) This clause does not apply to subcontracts for special test equipment when the contract contains the clause at FAR 52.245-18, Special Test Equipment.

(c) When this clause is included in a fixed-price type contract, consent to subcontract is required only on unpriced contract actions (including unpriced modification or unpriced delivery orders), and only if required in accordance with paragraph (d) or (e) of this clause.

(d) If the Contractor does not have an approved purchasing system, consent to subcontract is required for any subcontract that--

(1) Is of the cost-reimbursement, time-and-materials, or labor-hour type; or

(2) Is fixed-price and exceeds--

(i) For a contract awarded by the Department of Defense, the Coast Guard, or the National Aeronautics and Space Administration, the greater of the simplified theshold or 5 percent of the total estimated cost of the contract; or

(ii) For a contract awarded by a civilian agency other that the Coast Guard and the National Aeronautics and Space Administration, either the the simplified theshold or 5 percent of the total estimated cost of the contract.

(e) If the Contractor has an approved purchasing system, the Contractor nevertheless shall obtain the Contracting Officer's written consent before placing the following subcontracts:

_____

_____

_____

(f)(1) The Contractor shall notify the Contracting Officer reasonably in advance of placing any subcontract or modification thereof for which consent is required under paragraph (c), (d), or (e) of this clause, including the following information:

(i) A description of the supplies or services to be subcontracted.

(ii) Identification of the type of subcontract to be used.

(iii) Identification of the proposed subcontractor.

(iv) The proposed subcontract price.

(v) The subcontractor's current, complete, and accurate cost or pricing data and Certificate of Current Cost or Pricing Data, if required by other contract provisions.

(vi) The subcontractor's Disclosure Statement or Certificate relating to Cost Accounting Standards when such data are required by other provisions of this contract.

(vii) A negotiation memorandum reflecting--

(A) The principal elements of the subcontract price negotiations;

(B) The most significant considerations controlling establishment of initial or revised prices;

(C) The reason cost or pricing data were or were not required;

(D) The extent, if any, to which the Contractor did not rely on the subcontractor's cost or pricing data in determining the price objective and in negotiating the final price;

(E) The extent to which it was recognized in the negotiation that the subcontractor's cost or pricing data were not accurate, complete, or current; the action taken by the Contractor and subcontractor; and the effect of any such defective data on the total price negotiated;

(F) The reasons for any significant difference between the Contractor's price objective and the price negotiated; and

(G) A complete explanation of the incentive fee or profit plan when incentives are used. The explanation shall identify each critical performance element, management decisions used to quantify each incentive element, reasons for the incentives, and a summary of all trade-off possibilities considered.

(2) The Contractor is not required to notify the Contracting Officer in advance of entering into any subcontract for which consent is not required under paragraph (c), (d), or (e) of this clause.

(g) Unless the consent or approval specifically provides otherwise, neither consent by the Contracting Officer to any subcontract nor approval of the Contractor's purchasing system shall constitute a determination--

(1) Of the acceptability of any subcontract terms or conditions;

(2) Of the acceptability of any cost under this contract; or

(3) To relieve the Contractor of any responsibility for performing this contract.

(h) No subcontract or modification thereof placed under this contract shall provide for payment on a cost-plus-a-percentage-of-cost basis, and any fee payable under cost-reimbursement subcontracts shall not exceed the fee limitations in FAR 15.404-4(c)(4)(i).

(i) The Contractor shall give the Contracting Officer immediate written notice of any action or suit filed and prompt notice of any claim made against the Contractor by any subcontractor or vendor that, in the opinion of the Contractor, may result in litigation related in any way to this contract, with respect to which the Contractor may be entitled to reimbursement by the Government.

(j) The Government reserves the right to review the Contractor's purchasing system as set forth in FAR Subpart 44.3.

(k) Paragraphs (d) and (f) of this clause do not apply to the following subcontracts, which ere evaluated during negotiations:

_____

_____

_____

(End of clause)

113. FAR 52.244-6 SUBCONTRACTS FOR COMMERCIAL ITEMS (MAY 2001)

(a) *Definitions.* As used in this clause—

"Commercial item" has the meaning contained in the clause at 52.202-1, Definitions.
"Subcontract" includes a transfer of commercial items between divisions, subsidiaries, or affiliates of the Contractor or subcontractor at any tier.

(b) To the maximum extent practicable, the Contractor shall incorporate, and require its subcontractors at all tiers to incorporate, commercial items or nondevelopmental items as components of items to be supplied under this contract.

(c)(1) The following clauses shall be flowed down to subcontracts for commercial items:

(i) 52.219-8, Utilization of Small Business Concerns (O C T 2000) (15 U.S.C. 637(d)(2) and (3)), in all subcontracts that offer further subcontracting opportunities. If the subcontract (except subcontracts to small business concerns) exceeds $500,000 ($1,000,000 for construction of any public facility), the subcontractor must include 52.219-8 in lower tier subcontracts that offer sub-contracting opportunities.

(ii) 52.222-26, Equal Opportunity (FEB 1999) (E.O. 11246).

(iii) 52.222-35, Affirmative Action for Disabled Veterans and Veterans of the Vietnam Era (APR 1998) (38 U.S.C. 4212(a)).

(iv) 52.222-36, Affirmative Action for Workers with Disabilities (JUN 1998) (29 U.S.C. 793).

(v) 52.247-64, Preference for Privately Owned U.S.-Flagged Commercial Vessels (JUN 2000) (46 U.S.C. Appx 1241) (flowdown not required for subcontracts awarded beginning May 1, 1996).

(2) While not required, the Contractor may flow down to subcontracts for commercial items a minimal number of additional clauses necessary to satisfy its contractual obligations.

(d) The Contractor shall include the terms of this clause, including this paragraph (d), in subcontracts awarded under this contract.

(End of clause)

114. *FAR 52.245-2 GOVERNMENT PROPERTY (FIXED-PRICE CONTRACTS) (DEC 1989) [For Government Property over $100,000]

(a) Government-furnished property.

(1) The Government shall deliver to the Contractor, for use in connection with and under the terms of this contract, the Government-furnished property described in the Schedule or specifications together with any related data and information that the Contractor may request and is reasonably required for the intended use of the property (hereinafter referred to as "Government-furnished property").

(2) The delivery or performance dates for this contract are based upon the expectation that Government-furnished property suitable for use (except for property furnished "as is") will be delivered to the Contractor at the times stated in the Schedule or, if not so stated, in sufficient time to enable the Contractor to meet the contract's delivery or performance dates.

(3) If Government-furnished property is received by the Contractor in a condition not suitable for the intended use, the Contractor shall, upon receipt of it, notify the Contracting Officer, detailing the facts, and, as directed by the Contracting Officer and at Government expense, either repair, modify, return, or otherwise dispose of the property. After completing the directed action and upon written request of the Contractor, the Contracting Officer shall make an equitable adjustment as provided in paragraph (h) of this clause.

(4) If Government-furnished property is not delivered to the Contractor by the required time, the Contracting Officer shall, upon the Contractor's timely written request, make a determination of the delay, if any, caused the Contractor and shall make an equitable adjustment in accordance with paragraph (h) of this clause.

(b) Changes in Government-furnished property.

(1) The Contracting Officer may, by written notice,

(i) decrease the Government-furnished property provided or to be provided under this contract, or

(ii) substitute other Government-furnished property for the property to be provided by the Government, or to be acquired by the Contractor for the Government, under this contract. The Contractor shall promptly take such action as the Contracting Officer may direct regarding the removal, shipment, or disposal of the property covered by such notice.

(2) Upon the Contractor's written request, the Contracting Officer shall make an equitable adjustment to the contract in accordance with paragraph (h) of this clause, if the Government has agreed in the Schedule to make the property available for performing this contract and there is any--

(i) Decrease or substitution in this property pursuant to subparagraph (b)(1) above; or

(ii) Withdrawal of authority to use this property, if provided under any other contract or lease.

(c) Title in Government property.

(1) The Government shall retain title to all Government-furnished property.

(2) All Government-furnished property and all property acquired by the Contractor, title to which vests in the Government under this paragraph (collectively referred to as "Government property"), are subject to the provisions of this clause. However, special tooling accountable to this contract is subject to the provisions of the Special Tooling clause and is not subject to the provisions of this clause. Title to Government property shall not be affected by its incorporation into or attachment to any property not owned by the Government, nor shall government property become a fixture or lose its identity as personal property by being attached to any real property.

(3) Title to each item of facilities and special test equipment acquired by the Contractor for the Government under this contract shall pass to and vest in the Government when its use in performing this contract commences or when the Government has paid for it, whichever is earlier, whether or not title previously vested in the Government.

(4) If this contract contains a provision directing the Contractor to purchase material for which the Government will reimburse the Contractor as a direct item of cost under this contract--

(i) Title to material purchased from a vendor shall pass to and vest in the Government upon the vendor's delivery of such material; and

(ii) Title to all other material shall pass to and vest in the Government upon--

(A) Issuance of the material for use in contract performance;

(B) Commencement of processing of the material or its use in contract performance; or

(C) Reimbursement of the cost of the material by the Government, whichever occurs first.

(d) Use of Government property. The Government property shall be used only for performing this contract, unless otherwise provided in this contract or approved by the Contracting Officer.

(e) Property Administration.

(1) The Contractor shall be responsible and accountable for all Government property provided under this contract and shall comply with Federal Acquisition Regulation (FAR) Subpart 45.5, as in effect on the date of this contract.

(2) The Contractor shall establish and maintain a program for the use, maintenance, repair, protection, and preservation of Government property in accordance with sound industrial practice and the applicable provisions of Subpart 45.5 of the FAR.

(3) If damage occurs to Government property, the risk of which has been assumed by the Government under this contract, the Government shall replace the items or the Contractor shall make such repairs as the Government directs. However, if the Contractor cannot effect such repairs within the time required, the Contractor shall dispose of the property as directed by the Contracting Officer. When any property for which the Government is responsible is replaced or repaired, the Contracting Officer shall make an equitable adjustment in accordance with paragraph (h) of this clause.

(4) The Contractor represents that the contract price does not include any amount for repairs or replacement for which the Government is responsible. Repair or replacement of property for which the Contractor is responsible shall be accomplished by the Contractor at its own expense.

(f) Access. The Government and all its designees shall have access at all reasonable times to the premises in which any Government property is located for the purpose of inspecting the Government property.

(g) Risk of loss. Unless otherwise provided in this contract, the Contractor assumes the risk of, and shall be responsible for, any loss or destruction of, or damage to, Government property upon its delivery to the Contractor or upon passage of title to the Government under paragraph (c) of this clause. However, the Contractor is not responsible for reasonable wear and tear to Government property or for Government property properly consumed in performing this contract.

(h) Equitable adjustment. When this clause specifies an equitable adjustment, it shall be made to any affected contract provision in accordance with the procedures of the Changes clause. When appropriate, the Contracting Officer may initiate an equitable adjustment in favor of the Government. The right to an equitable

adjustment shall be the Contractor's exclusive remedy. The Government shall not be liable to suit for breach of contract for--

(1) Any delay in delivery of Government-furnished property;

(2) Delivery of Government-furnished property in a condition not suitable for its intended use;

(3) A decrease in or substitution of Government-furnished property; or

(4) Failure to repair or replace Government property for which the Government is responsible.

(i) Final accounting and disposition of Government property. Upon completing this contract, or at such earlier dates as may be fixed by the Contracting Officer, the Contractor shall submit, in a form acceptable to the Contracting Officer, inventory schedules covering all items of Government property (including any resulting scrap) not consumed in performing this contract or delivered to the Government. The Contractor shall prepare for shipment, deliver f.o.b. origin, or dispose of the Government property as may be directed or authorized by the Contracting Officer. The net proceeds of any such disposal shall be credited to the contract price or shall be paid to the Government as the Contracting Officer directs.

(j) Abandonment and restoration of Contractor's premises. Unless otherwise provided herein, the Government--

(1) May abandon any Government property in place, at which time all obligations of the Government regarding such abandoned property shall cease; and

(2) Has no obligation to restore or rehabilitate the Contractor's premises under any circumstances (e.g., abandonment, disposition upon completion of need, or upon contract completion). However, if the Government-furnished property (listed in the Schedule or specifications) is withdrawn or is unsuitable for the intended use, or if other Government property is substituted, then the equitable adjustment under paragraph (h) of this clause may properly include restoration or rehabilitation costs.

(k) Communications. All communications under this clause shall be in writing.

(l) Overseas contracts. If this contract is to be performed outside of the United States of America, its territories, or possessions, the words "Government" and "Government-furnished" (wherever they appear in this clause) shall be construed as "United States Government" and "United States Government-furnished," respectively.

115. *FAR 52.245-4 GOVERNMENT-FURNISHED PROPERTY (SHORT FORM) (APR 1984) [For Government Property $100,000 or Less]

(a) The Government shall delivery to the Contractor, at the time and locations stated in this contract, the Government-furnished property described in the Schedule or specifications. If that property, suitable for its intended use, is not delivered to the Contractor, the Contracting Officer shall equitably adjust affected provisions of this contract in accordance with the Changed clause when--

(1) The Contractor submits a timely written request for an equitable adjustment; and

(2) The facts warrant an equitable adjustment.

(b) Title to Government-furnished property shall remain in the Government. The Contractor shall use the Government-furnished property only in connection with this contract. The Contractor shall maintain adequate property control records in accordance with sound industrial practice and will make such records available for Government inspection at all reasonable times, unless the clause at Federal Acquisition Regulation 52.245-1, Property Records, is included in this contract.

(c) Upon delivery of Government-furnished property to the Contractor, the Contractor assumes the risk and responsibility for its loss or damage, except--

(1) For reasonable wear and tear;

(2) To the extent property is consumed in performing this contract; or

(3) As otherwise provided for by the provisions of this contract.

(d) Upon completing this contract, the Contractor shall follow the instructions of the Contracting Officer regarding the disposition of all Government-furnished property not consumed in performing this contract or previously delivered to the Government. The Contractor shall prepare for shipment, deliver f.o.b. origin, or dispose of the Government property, as may be directed or authorized by the Contracting Officer. The net proceeds of any such disposal shall be credited to the contract price or shall be paid to the Government as directed by the Contracting Officer.

(e) If this contract is to be performed outside the United States of America, its territories, or possessions, the words "Government" and "Government-furnished" (wherever they appear in this clause) shall be construed as "United States Government" and "United States Government-furnished," respectively.

116. *FAR 52.246-12 INSPECTION OF CONSTRUCTION (AUG 1996)

(a) Definition. "Work" includes, but is not limited to, materials, workmanship, and manufacture and fabrication of components.

(b) The Contractor shall maintain an adequate inspection system and perform such inspections as will ensure that the work performed under the contract conforms to contract requirements. The Contractor shall maintain complete inspection records and make them available to the Government. All work shall be conducted under the general direction of the Contracting Officer and is subject to Government inspection and test at all places and at all reasonable times before acceptance to ensure strict compliance with the terms of the contract.

(c) Government inspections and tests are for the sole benefit of the Government and do not--

(1) Relieve the Contractor of responsibility for providing adequate quality control measures;

(2) Relieve the Contractor of responsibility for damage to or loss of the material before acceptance;

(3) Constitute or imply acceptance; or

(4) Affect the continuing rights of the Government after acceptance of the completed work under paragraph (i) below.

(d) The presence or absence of a Government inspector does not relieve the Contractor from any contract requirement, nor is the inspector authorized to change any term or condition of the specification without the Contracting Officer's written authorization.

(e) The Contractor shall promptly furnish, at no increase in contract price, all facilities,labor, and material reasonably needed for performing such safe and convenient inspections and tests as may be required by the Contracting Officer. The Government may charge to the Contractor any additional cost of inspection or test when work is not ready at the time specified by the Contractor for inspection or test, or when prior rejection makes reinspection or retest necessary. The Government shall perform all inspections and tests in a manner that will not unnecessarily delay the work. Special, full size, and performance tests shall be performed as described in the contract.

(f) The Contractor shall, without charge, replace or correct work found by the Government not to conform to contract requirements, unless in the public interest the Government consents to accept the work with an appropriate adjustment in contract price. The Contractor shall promptly segregate and remove rejected material from the premises.

(g) If the Contractor does not promptly replace or correct rejected work, the Government may

(1) by contract or otherwise, replace or correct the work and charge the cost to the Contractor or

(2) Terminate for default the Contractor's right to proceed.

(h) If, before acceptance of the entire work, the Government decides to examine already completed work by removing it or tearing it out, the Contractor, on request, shall promptly furnish all necessary facilities, labor, and material. If the work is found to be defective or nonconforming in any material respect due to the fault of the Contractor or its subcontractors, the Contractor shall defray the expenses of the examination and of satisfactory reconstruction. However, if the work is found to meet contract requirements, the Contracting Officer shall make an equitable adjustment for the additional services involved in the examination and reconstruction, including, if completion of the work was thereby delayed, an extension of time.

(i) Unless otherwise specified in the contract, the Government shall accept, as promptly as practicable after completion and inspection, all work required by the contract or that portion of the work the Contracting Officer determines can be accepted separately. Acceptance shall be final and conclusive except for latent defects, fraud, gross mistakes amounting to fraud, or the Government's rights under any warranty or guarantee.

117. *FAR 52.246-21 WARRANTY OF CONSTRUCTION (MAR 1994)

(a) In addition to any other warranties in this contract, the Contractor warrants, except as provided in paragraph (i) of this clause, that work performed under this contract conforms to the contract requirements and is free of any defect in equipment, material, or design furnished, or workmanship performed by the Contractor or any subcontractor or supplier at any tier.

(b) This warranty shall continue for a period of 1 year from the date of final acceptance of the work. If the Government takes possession of any part of the work before final acceptance, this warranty shall continue for a period of 1 year from the date the Government takes possession.

(c) The Contractor shall remedy at the Contractor's expense any failure to conform, or any defect. In addition, the Contractor shall remedy at the Contractor's expense any damage to Government-owned or controlled real or personal property, when that damage is the result of--

(1) The Contractor's failure to conform to contract requirements; or
(2) Any defect of equipment, material, workmanship, or design furnished.

(d) The Contractor shall restore any work damaged in fulfilling the terms and conditions of this clause. The Contractor's warranty with respect to work repaired or replaced will run for 1 year from the date of repair or replacement.

(e) The Contracting Officer shall notify the Contractor, in writing, within a reasonable time after the discovery of any failure, defect, or damage.

(f) If the Contractor fails to remedy any failure, defect, or damage within a reasonable time after receipt of notice, the Government shall have the right to replace, repair, or otherwise remedy the failure, defect, or damage at the Contractor's expense.

(g) With respect to all warranties, express or implied, from subcontractors, manufacturers, or suppliers for work performed and materials furnished under this contract, the Contractor shall--

(1) Obtain all warranties that would be given in normal commercial practice;

(2) Require all warranties to be executed, in writing, for the benefit of the Government, if directed by the Contracting Officer; and

(3) Enforce all warranties for the benefit of the Government, if directed by the Contracting Officer.

(h) In the event the Contractor's warranty under paragraph (b) of this clause has expired, the Government may bring suit at its expense to enforce a subcontractor's, manufacturer's, or supplier's warranty.

(i) Unless a defect is caused by the negligence of the Contractor or subcontractor or supplier at any tier, the Contractor shall not be liable for the repair of any defects of material or design furnished by the Government nor for the repair of any damage that results from any defect in Government-furnished material or design.

(j) This warranty shall not limit the Government's rights under the Inspection and Acceptance clause of this contract with respect to latent defects, gross mistakes, or fraud.

118. DFARS 252.247-7023 TRANSPORTATION OF SUPPLIES BY SEA (MAR 2000)

(a) Definitions.

As used in this clause--

(1) "Components" means articles, materials, and supplies incorporated directly into end products at any level of manufacture, fabrication, or assembly by the Contractor or any subcontractor.

(2) 'Department of Defense" (DOD) means the Army, Navy, Air Force, Marine Corps, and defense agencies.

(3) "Foreign flag vessel" means any vessel that is not a U.S.-flag vessel.

(4) "Ocean transportation" means any transportation aboard a ship, vessel, boat, barge, or ferry through international waters.

(5) "Subcontractor" means a supplier, materialman, distributor, or vendor at any level below the prime Contractor whose contractual obligation to perform results from, or is conditioned upon, award of the prime contract and who is performing any part of the work or other requirement of the prime contract.

(6) "Supplies" means all property, except land and interests in lard, that is clearly identifiable for eventual use by or owned by the DoD at the time of transportation by sea.

(i) An item is clearly identifiable for eventual use by the DoD if, for example, the contract documentation contains a reference to a DoD contract number or a military destination.

(ii) "Supplies" includes (but is not limited to) public works; buildings and facilities; ships; floating equipment and vessels of every character, type, and description, with parts, subassemblies, accessories, and equipment; machine tools; material; equipment; stores of all kinds; end items; construction materials; and components of the foregoing.

(7) "U.S.-flag vessel" means a vessel of the United States or belonging to the United States, including any vessel registered or having national status under the laws of the United States.

(b) (1) The Contractor shall use U.S. -flag vessels when transporting any supplies by sea under this contract.

(2) A subcontractor transporting supplies by sea under this contract shall use U.S.-flag vessel if--

(i) This Contract is a construction contract; or

(ii) The supplies being transported are-

(A) Noncommercial items; or

(B) Commercial items that-

(1) The Contractor is reselling or distributing to the Government without adding value (generally, the Contractor does not add value to items that it subcontracts for f.o.b. destination shipment);

(2) Are shipped in direct support of U.S. military contingency operations, exercises, or forces deployed in humanitarian or peacekeeping operations; or

(3) Are commissary or exchange cargoes transported outside of the Defense Transportation System in accordance with 10 U.S.C. 2643.

(c) The Contractor and its subcontractors may request that the Contracting Officer authorize shipment in foreign-flag vessels, or designate available U.S.-flag vessels, if the Contractor or a subcontractor believes that--

(1) U.S.-flag vessels are not available for timely shipment;

(2) The freight charges are inordinately excessive or unreasonable; or

(3) Freight charges are higher that charges to private persons for transportation of like goods.

(d) The Contractor must submit any request for use of other than U.S.-flag vessels in writing to the Contracting Officer at least 45 days prior to the sailing date necessary to meet its delivery schedules. The Contracting Officer will process requests submitted after such date(s) as expeditiously as possible, but the Contracting Officer's failure to grant approvals to meet the shipper's sailing date will not of itself constitute a compensable delay under this or any other clause of this contract. Requests shall contain at a minimum--

(1) Type, weight, and cube of cargo;

(2) Required shipping date:

(3) Special handling and discharge requirements;

(4) Loading and discharge points;

(5) Name of shipper and consignee;

(6) Prime contract number, and

(7) A documented description of efforts made to secure U.S.-flag vessels, including points of contact (with names and telephone numbers) with at least two U.S.-flag carriers contacted. Copies of telephone notes, telegraphic and facsimile message or letters will be sufficient for this purpose.

(e) The Contractor shall, within 30 days after each shipment covered by this clause, provide the Contracting Officer and the Division of National Cargo, Office of Market Development, Maritime Administration, U.S. Department of Transportation, Washington, DC 20590, one copy of the rated on board vessel operating carrier's ocean bill of lading, which shall contain the following information--

(1) Prime contract number;
(2) Name of vessel;
(3) Vessel flag of registry;
(4) Date of loading;
(5) Port of loading;
(6) Port of final discharge;
(7) Description of commodity;
(8) Gross weight in pounds and cubic feet if available;
(9) Total ocean freight in U.S. dollars; and
(10) Name of the steamship company.

(f) The Contractor agrees to provide with its final invoice under this contract a representation that to the best of its knowledge and belief--

(1) No ocean transportation was used in the performance of this contract;
(2) Ocean transportation was used and only U.S.-flag vessels were used for all ocean shipments under the contract;
(3) Ocean transportation was used, and the Contractor had the written consent of the Contracting Officer for all non-U.S.-flag ocean transportation; or
(4) Ocean transportation was used and some or all of the shipments were made on non-U.S.-flag vessels without the written consent of the Contracting Officer. The Contractor shall describe these shipments in the following format;

ITEM DESCRIPTION	CONTRACT LINE ITEMS	QUANTITY
TOTAL		

(g) If the final invoice does not include the required representation, the Government will reject and return it to the Contractor as an improper invoice for the purposes of the Prompt Payment clause of this contract. In the event there has been unauthorized use of non-U.S.-flag vessels in the performance of this contract, the Contracting Officer is entitled to equitably adjust the contract, based on the unauthorized use.

(h) The Contractor shall include this clause, including this paragraph (h) in all subcontracts under this contract that-

(1) Exceed the simplified acquistion threshold in Part 2 of the Federal Acquisition Regulation; and
(2) Are for a type of supplies described in paragraph (b) (2) of this clause.

119. DFARS 252.247-7024 NOTIFICATION OF TRANSPORTATION OF SUPPLIES BY SEA (MAR 2000)

(a) The Contractor has indicated by the response to the solicitation provision, Representation of Extent of Transportation by Sea, that it did not anticipate transporting by sea any supplies. If, however, after the award of this contract, the Contractor learns that supplies, as defined in the Transportation of Supplies by Sea clause of this contract, will be transported by sea, the Contractor--

(1) Shall notify the Contracting Officer of that fact; and
(2) Hereby agrees to comply with all the terms and conditions of the Transportation of Supplies by Sea clause of this contract.

(b) (1) The Contractor shall use U.S. -flag vessels when transporting any supplies by sea under this contract.

(2) A subcontractor transporting supplies by sea under this contract shall use U.S.-flag vessel if--

(i) This Contract is a construction contract; or

(ii) The supplies being transported are-

(A) Noncommercial items; or

(B) Commercial items that-

(1) The Contractor is reselling or distributing to the Government without adding value (generally, the Contractor does not add value to items that it subcontracts for f.o.b. destination shipment);

(2) Are shipped in direct support of U.S. military contingency operations, exercises, or forces deployed in humanitarian or peacekeeping operations; or

(3) Are commissary or exchange cargoes transported outside of the Defense Transportation System in accordance with 10 U.S.C. 2643.

120. FAR 52.248-3 VALUE ENGINEERING--CONSTRUCTION (FEB 2000) (ALERNATE I (APR 1984)

(a) General. The Contractor is encouraged to develop, prepare, and submit value engineering change proposals (VECP's) voluntarily. The Contractor shall share in any instant contract savings realized from accepted VECP's, in accordance with paragraph (f) of this clause.

(b) Definitions. "Collateral costs," as used in this clause, means agency costs of operation, maintenance, logistic support, or Government-furnished property.

"Collateral savings," as used in this clause, means those measurable net reductions resulting from a VECP in the agency's overall projected collateral costs, exclusive of acquisition savings, whether or not the acquisition cost changes.

"Contractor's development and implementation costs," as used in this clause, means those costs the Contractor incurs on a VECP specifically in developing, testing, preparing, and submitting the VECP, as well as those costs the Contractor incurs to make the contractual changes required by Government acceptance of a VECP.

"Government costs," as used in this clause, means those agency costs that result directly from developing and implementing the VECP, such as any net increases in the cost of testing, operations, maintenance, and logistic support. The term does not include the normal administrative costs of processing the VECP.

"Instant contract savings," as used in this clause, means the estimated reduction in Contractor cost of performance resulting from acceptance of the VECP, minus allowable Contractor's development and implementation costs, including subcontractors' development and implementation costs (see paragraph (h) of this clause).

"Value engineering change proposal (VECP)" means a proposal that--

(1) Requires a change to this, the instant contract, to implement; and

(2) Results in reducing the contract price or estimated cost without impairing essential functions or characteristics; provided, that it does not involve a change--

(i) In deliverable end item quantities only; or

(ii) To the contract type only.

(c) VECP preparation. As a minimum, the Contractor shall include in each VECP the information described in paragraphs (c) (1) through (7) of this clause. If the proposed change is affected by contractually required configuration management or similar procedures, the instructions in those procedures relating to format, identification, and priority assignment shall govern VECP preparation. The VECP shall include the following:

(1) A description of the difference between the existing contract requirement and that proposed, the comparative advantages and disadvantages of each, a justification when an item's function or characteristics are being altered, and the effect of the change on the end item's performance.

(2) A list and analysis of the contract requirements that must be changed if the VECP is accepted, including any suggested specification revisions.

(3) A separate, detailed cost estimate for

(i) the affected portions of the existing contract requirement and

(ii) the VECP. The cost reduction associated with the VECP shall take into account the Contractor's allowable development and implementation costs, including any amount attributable to subcontracts under paragraph (h) of this clause.

(4) A description and estimate of costs the Government may incur in implementing the VECP, such as test and evaluation and operating and support costs.

(5) A prediction of any effects the proposed change would have on collateral costs to the agency.

(6) A statement of the time by which a contract modification accepting the VECP must be issued in order to achieve the maximum cost reduction, noting any effect on the contract completion time or delivery schedule.

(7) Identification of any previous submissions of the VECP, including the dates submitted, the agencies and contract numbers involved, and previous Government actions, if known.

(d) Submission. The Contractor shall submit VECP's to the Resident Engineer at the worksite, with a copy to the Contracting Officer.

(e) Government action.

(1) The Contracting Officer will notify the Contractor of the status of the VECP within 45 calendar days after the contracting office receives it. If additional time is required, the Contracting Officer will notify the Contractor within the 45-day period and provide the reason for the delay and the expected date of the decision. The Government will process VECP's expeditiously; however, it will not be liable for any delay in acting upon a VECP.

(2) If the VECP is not accepted, the Contracting Officer will notify the Contractor in writing, explaining the reasons for rejection. The Contractor may withdraw any VECP, in whole or in part, at any time before it is accepted by the Government. The Contracting Officer may require that the Contractor provide written notification before undertaking significant expenditures for VECP effort.

(3) Any VECP may be accepted, in whole or in part, by the Contracting Officer's award of a modification to this contract citing this clause. The Contracting Officer may accept the VECP, even though an agreement on price reduction has not been reached, by issuing the Contractor a notice to proceed with the change. Until a notice to proceed is issued or a contract modification applied a VECP to this contract, the Contractor shall perform in accordance with the existing contract. The decision to accept or reject all or part of any VECP is a unilateral decision made solely at the discretion of the Contracting Officer.

(f) Sharing.

(1) Rates. The Government's share of savings is determined by subtracting Government costs from instant contract savings and multiplying the result by

(i) 45 percent for fixed-price contracts or

(ii) 75 percent for cost-reimbursement contracts.

(2) Payment. Payment of any share due the Contractor for use of a VECP on this contract shall be authorized by a modification to this contract to--

(i) Accept the VECP;

(ii) Reduce the contract price or estimated cost by the amount of instant contract savings; and

(iii) Provide the Contractor's share of savings by adding the amount calculated to the contract price or fee.

(g) Deleted.

(h) Subcontracts. The Contractor shall include an appropriate value engineering clause in any subcontract of $50,000 or more and may include one in subcontracts of lesser value. In computing any adjustment in this contract's price under paragraph (f) of this clause, the Contractor's allowable development and implementation costs clearly resulting from a VECP accepted by the Government under this contract, but shall exclude any value engineering incentive payments to a subcontractor. The Contractor may choose any arrangement for subcontractor value engineering incentive payments; provided, that these payments shall not reduce the Government's share of the savings resulting from the VECP.

(i) Data. The Contractor may restrict the Government's right to use any part of a VECP or the supporting data by marking the following legend on the affected parts:

"These data, furnished under the Value Engineering--Construction clause of contract - _____, shall not be disclosed outside the Government or duplicated, used, or disclosed, in whole or in part, for any purpose other than to evaluate a value engineering change proposal submitted under the clause. This restriction does not limit the Government's right to use information contained in these data if it has been obtained or is otherwise available from the Contractor or from another source without limitations."

If a VECP is accepted, the Contractor hereby grants the Government unlimited rights in the VECP and supporting data, except that, with respect to data qualifying and submitted as limited rights technical data, the Government shall have the rights specified in the contract modification implementing the VECP and shall appropriately mark the data. (The terms "unlimited rights" and "limited rights" are defined in Part 27 of the Federal Acquisition Regulation.)

(End of Clause)

121. *FAR 52.249-1 TERMINATION FOR CONVENIENCE OF THE GOVERNMENT (FIXED-PRICE) (SHORT FORM) (APR 1984) [For Contracts $100,000 or Less]

The Contracting Officer, by written notice, may terminate this contract, in whole or in part, when it is in the Government's interest. If this contract is terminated, the rights, duties, and obligations of the parties, including compensation to the Contractor, shall be in accordance with Part 49 of the Federal Acquisition Regulation in effect on the date of this contract.

122. *FAR 52.249-2 TERMINATION FOR CONVENIENCE OF THE GOVERNMENT (FIXED-PRICE) ALTERNATE I (SEP 1996) [For Contracts Over $100,000]

(a) The Government may terminate performance of work under this contract in whole or, from time to time, in part if the Contracting Officer determines that a termination is in the Government's interest. The Contracting Officer shall terminate by delivering to the Contractor a Notice of Termination specifying the extent of termination and the effective date.

(b) After receipt of a Notice of Termination, and except as directed by the Contracting Officer, the Contractor shall immediately proceed with the following obligations, regardless of any delay in determining or adjusting any amounts due under this clause:

(1) Stop work as specified in the notice.

(2) Place no further subcontracts or orders (referred to as subcontracts in this clause) for materials, services, or facilities, except as necessary to complete the continued portion of the contract.

(3) Terminate all subcontracts to the extent they relate to the work terminated.

(4) Assign to the Government, as directed by the Contracting Officer, all right, title, and interest of the Contractor under the subcontracts terminated, in which case the Government shall have the right to settle or to pay any termination settlement proposal arising out of those terminations.

(5) With approval or ratification to the extent required by the Contracting Officer, settle all outstanding liabilities and termination settlement proposals arising from the termination of subcontracts; the approval or ratification will be final for purposes of this clause.

(6) As directed by the Contracting Officer, transfer title and deliver to the Government

(i) the fabricated or unfabricated parts, work in process, completed work, supplies, and other material produced or acquired for the work terminated, and

(ii) the completed or partially completed plans, drawings, information, and other property that, if the contract had been completed, would be required to be furnished to the Government.

(7) Complete performance of the work not terminated.

(8) Take any action that may be necessary, or that the Contracting Officer may direct, for the protection and preservation of the property related to this contract that is in the possession of the Contractor and in which the Government has or may acquire an interest.

(9) Use its best efforts to sell, as directed or authorized by the Contracting Officer, any property of the types referred to in subparagraph (b) (6) of this clause; provided, however, that the Contractor

(i) is not required to extend credit to any purchaser and

(ii) may acquire the property under the conditions prescribed by, and at prices approved by, the Contracting Officer. The proceeds of any transfer or disposition will be applied to reduce any payments to be made by the Government under this contract, credited to the price or cost of the work, or paid in any other manner directed by the Contracting Officer.

(c) The Contractor shall submit complete termination inventory schedules no later than 120 days from the effective date of termination, unless extended in writing by the Contracting Officer upon written request of the Contractor within this 120-day period.

(d) After expiration of the plant clearance period as defined in Subpart 45.6 of the Federal Acquisition Regulation, the Contractor may submit to the Contracting Officer a list, certified as to quantity and quality, of termination inventory not previously disposed of, excluding items authorized for disposition by the Contracting Officer. The Contractor may request the Government to remove those items or enter into an agreement for their storage. Within 15 days, the Government will accept title to those items and remove them or enter into a storage agreement. The Contracting Officer may verify the list upon removal of the items, or if stored, within 45 days from submission of the list, and shall correct the list, as necessary, before final settlement.

(e) After termination, the Contractor shall submit a final termination settlement proposal to the Contracting Officer in the form and with the certification prescribed by the Contracting Officer. The Contractor shall submit the proposal promptly, but no later than 1 year from the effective date of termination, unless extended in writing by the Contracting Officer upon written request of the Contractor within this 1 year period. However, if the Contracting Officer determines that the facts justify it, a termination settlement proposal may be received and acted on after 1 year or any extension. If the Contractor fails to submit the proposal within the time allowed, the Contracting Officer may determine, on the basis of information available, the amount, if any, due the Contractor because of the termination and shall pay the amount determined.

(f) Subject to paragraph (e) of this clause, the Contractor and the Contracting Officer may agree upon the whole or any part of the amount to be paid because of the termination. The amount may include a reasonable allowance for profit on work done. However, the agreed amount, whether under this paragraph (f) or paragraph (g) of this clause, exclusive of costs shown in subparagraph (g)(3) of this clause, may not exceed the total contract price as reduced by (1) the amount of payments previously made and (2) the contract price of work not terminated. The contract shall be amended, and the Contractor paid the agreed amount. Paragraph (f) of this clause shall not limit, restrict, or affect the amount that may be agreed upon to be paid under this paragraph.

(g) If the Contractor and the Contracting Officer fail to agree on the whole amount to be paid the Contractor because of the termination of work, the Contracting Officer shall pay the Contractor the amounts determined as follows, but without duplication of any amounts agreed upon under paragraph (f) of this clause:

(1) For contract work performed before the effective date of the termination, the total (without duplication of any items) of--

(i) The cost of this work;

(ii) The cost of settling and paying termination settlement proposals under terminated subcontracts that are properly chargeable to the terminated portion of the contract if not included in subdivision (g)(1)(i) of this clause; and

(iii) A sum, as profit on subdivision (g)(1)(i) of this clause, determined by the Contracting Officer under 49.202 of the Federal Acquisition Regulation, in effect on the date of this contract, to be fair and reasonable; however, if it appears that the Contractor would have sustained a loss on the entire contract had it been completed, the Contracting Officer shall allow no profit under this subdivision (iii) and shall reduce the settlement to reflect the indicated rate of loss.

(2) The reasonable costs of settlement of the work terminated, including--

(i) Accounting, legal, clerical, and other expenses reasonably necessary for the preparation of termination settlement proposals and supporting data;

(ii) The termination and settlement of subcontracts (excluding the amounts of such settlements); and

(iii) Storage, transportation, and other costs incurred, reasonably necessary for the preservation, protection, or disposition of the termination inventory.

(h) Except for normal spoilage, and except to the extent that the Government expressly assumed the risk of loss, the Contracting Officer shall exclude from the amounts payable to the Contractor under paragraph (g) of this clause, the fair value, as determined by the Contracting Officer, of property that is destroyed, lost, stolen, or damaged so as to become undeliverable to the Government or to a buyer.

(i) The cost principles and procedures of Part 31 of the Federal Acquisition Regulation, in effect on the date of this contract, shall govern all costs claimed, agreed to, or determined under this clause.

(j) The Contractor shall have the right of appeal, under the Disputes clause, from any determination made by the Contracting Officer under paragraph (e), (g), or (l) of this clause, except that if the Contractor failed to submit the termination settlement proposal within the time provided in paragraph (e) or (l), respectively, and failed to request a time extension, there is no right of appeal.

(k) In arriving at the amount due the Contractor under this clause, there shall be deducted--

(1) All unliquidated advance or other payments to the Contractor under the terminated portion of this contract;

(2) Any claim which the Government has against the Contractor under this contract; and

(3) The agreed price for, or the proceeds of sale of, materials, supplies, or other things acquired by the Contractor or sold under the provisions of this clause and not recovered by or credited to the Government.

(l) If the termination is partial, the Contractor may file a proposal with the Contracting Officer for an equitable adjustment of the price(s) of the continued portion of the contract. The Contracting Officer shall make any equitable adjustment agreed upon. Any proposal by the Contractor for an equitable adjustment under this clause shall be requested within 90 days from the effective date of termination unless extended in writing by the Contracting Officer.

(m) (1) The Government may, under the terms and conditions it prescribes, make partial payments and payments against costs incurred by the Contractor for the terminated portion of the contract, if the Contracting Officer believes the total of these payments will not exceed the amount to which the Contractor will be entitled.

(2) If the total payments exceed the amount finally determined to be due, the Contractor shall repay the excess to the Government upon demand, together with interest computed at the rate established by the Secretary of the Treasury under 50 U.S.C. App. 1215(b)(2). Interest shall be computed for the period from the date the excess payment is received by the Contractor to the date the excess is repaid. Interest shall not be charged on any excess payment due to a reduction in the Contractor's termination settlement proposal because of retention or other disposition of termination inventory until 10 days after the date of the retention or disposition, or a later date determined by the Contracting Officer because of the circumstances.

(n) Unless otherwise provided in this contract or by statute, the Contractor shall maintain all records and documents relating to the terminated portion of this contract for 3 years after final settlement. This includes all books and other evidence bearing on the Contractor's costs and expenses under this contract. The Contractor shall make these records and documents available to the Government, at the Contractor's office, at all reasonable times, without any direct charge. If approved by the Contracting Officer, photographs, microphotographs, or other authentic reproductions may be maintained instead of original records and documents.

123. *FAR 52.249-10 DEFAULT (FIXED-PRICE CONSTRUCTION) (APR 1984)

(a) If the Contractor refuses or fails to prosecute the work or any separable part, with the diligence that will insure its completion within the time specified in this contract including any extension, or fails to complete the work within this time, the Government may, by written notice to the Contractor, terminate the right to proceed with the work (or the separable part of the work) that has been delayed. In this event, the Government may take over the work and complete it by contract or otherwise, and may take possession of and use any materials, appliances, and plant on the work site necessary for completing the work. The Contractor and its sureties shall be liable for any damage to the Government resulting from the Contractor's refusal or failure to complete the work within the specified time, whether or not the Contractor's right to proceed with the work is terminated. This liability includes any increased costs incurred by the Government in completing the work.

(b) The Contractor's right to proceed shall not be terminated nor the Contractor charged with damages under this clause, if-

(1) The delay in completing the work arises from unforeseeable causes beyond the control and without the fault or negligence of the Contractor. Examples of such causes include

(i) acts of God or of the public enemy,

(ii) acts of the Government in either its sovereign or contractual capacity,

(iii) acts of another Contractor in the performance of a contract with the Government,

(iv) fires,

(v) floods,

(vi) epidemics,

(vii) quarantine restrictions,

(viii) strikes,

(ix) freight embargoes,

(x) unusually severe weather, or

(xi) delays of subcontractors or suppliers at any tier arising from unforeseeable causes beyond the control and without the fault or negligence of both the Contractor and the subcontractors or suppliers; and

(2) The Contractor, within 10 days from the beginning of any delay (unless extended by the Contracting Officer), notifies the Contracting Officer in writing of the causes of delay. The Contracting Officer shall ascertain the facts and the extent of delay. If, in the judgment of the Contracting Officer, the findings of fact warrant such action, the time for completing the work shall be extended. The findings of the Contracting Officer shall be final and conclusive on the parties, but subject to appeal under the Disputes clause.

(c) If, after termination of the Contractor's right to proceed, it is determined that the Contractor was not in default, or that the delay was excusable, the rights and obligation s of the parties will be the same as if the termination had been issued for the convenience of the Government.

(d) The rights and remedies of the Government in this clause are in addition to any other rights and remedies provided by law or under this contract.

124. ENVIRONMENTAL LITIGATION (1974 NOV OCE)

(a) If the performance of all or any part of the work is suspended, delayed, or interrupted due to an order of a court of competent jurisdiction as a result of environmental litigation, as defined below, the Contracting Officer, at the request of the Contractor, shall determine whether the order is due in any part to the acts or omissions of the Contractor or a Subcontractor at any tier not required by the terms of this contract. If it is determined that the order is not due in any part to acts or omissions of the Contractor or a Subcontractor at any tier other than as required by the terms of this contract, such suspension, delay, or interruption shall be considered as if ordered by the Contracting Officer in the administration of this contract under the terms of the "Suspension of Work" clause of this contract. The period of such suspension, delay, or interruption shall be considered unreasonable, and an adjustment shall be made for any increase in the cost of performance of this contract (excluding profit) as provided in that clause, subject to all the provisions thereof.

(b) The term "environmental litigation," as used herein, means a lawsuit alleging that the work will have an adverse effect on the environment or that the Government has not duly considered, either substantively or procedurally, the effect of the work on the environment.

125. EFARS 52.249-5000 BASIS FOR SETTLEMENT OF PROPOSALS

Actual costs will be used to determine equipment cost for a settlement proposal submitted on the total cost basis under FAR 49.206-2(b). In evaluating a termination settlement proposal using the total cost basis, the following principles will be applied to determine allowable equipment costs:

(1) Actual costs for each piece of equipment, or groups of similar serial or series equipment, need not be available in the contractor's accounting records to determine total actual equipment costs.

(2) If equipment costs have been allocated to a contract using predetermined rates, those charges will be adjusted to actual costs.

(3) Recorded job costs adjusted for unallowable and unallocable expenses will be used to determine equipment operating expenses.

(4) Ownership costs (depreciation) will be determined using the contractor's depreciation schedule (subject to the provisions of FAR 31.205-11).

(5) License, taxes, storage and insurance costs are normally recovered as an indirect expense and unless the contractor charges these costs directly to contracts, they will be recovered through the indirect expense rate.

126. INAPPLICABLE PROVISIONS AND CLAUSES (Local Provision). [Applicable only for projects or delivery orders less than $100,000]

This provision applies only to delivery orders and projects less than $100,000.

Pursuant to Pub. L. 103-355, the following provisions and clauses, as noted below, are inapplicable to this contract:

(a) FAR 28.102-3, Miller Act requirements;
(b) Not Used;
(c) FAR 52.203-5, Covenant Against Contingent Fees;
(d) FAR 52.203-6, Restrictions on Subcontractor Sales to the Government;
(e) FAR 52.203-7, Anti-Kickback Procedures;
(f) FAR 52.222-4, Contract Work Hours and Safety Standards Act-Overtime Compensation; and
(g) FAR 52.223-6, Drug-Free Workplace, except for individuals.

DOCUMENT TABLE OF CONTENTS

DIVISION 00 - DOCUMENTS

SECTION 00800

SPECIAL CONTRACT REQUIREMENTS

5/00, Rev 5/01

PART 1 GENERAL

1.1 COMMENCEMENT, PROSECUTION, AND COMPLETION OF WORK (APR 1984)
1.1.1 Start Work
1.2 Utility Relocations by the City of Sioux City
1.3 Street Closures
1.4 LIQUIDATED DAMAGES-CONSTRUCTION (SEPT 2000)
1.5 EXCEPTION TO COMPLETION TIME AND LIQUIDATED DAMAGES
1.6 CONTRACT DRAWINGS AND SPECIFICATIONS
1.6.1 SETS FURNISHED
1.6.2 NOTIFICATION OF DISCREPANCIES
1.6.3 OMISSIONS
1.7 PHYSICAL DATA (APR 1984)
1.8 PAYMENT
1.8.1 PROMPT PAYMENT ACT
1.8.2 PAYMENTS FOR MODIFICATIONS
1.8.3 PAYMENT FOR MATERIALS DELIVERED OFFSITE (MAR 1995)
1.9 DAMAGE TO WORK
1.10 AVAILABILITY AND USE OF UTILITY SERVICES
1.11 QUANTITY SURVEYS (APR 1984)
1.12 TIME EXTENSIONS FOR UNUSUALLY SEVERE WEATHER
1.13 INSURANCE REQUIRED
1.14 CONTRACTOR QUALITY CONTROL (CQC)
1.15 NONDOMESTIC CONSTRUCTION MATERIALS
1.16 DAILY WORK SCHEDULES
1.17 EQUIPMENT OWNERSHIP AND OPERATING EXPENSE SCHEDULE (MAR 1995)
1.18 AS-BUILT DRAWINGS
1.19 PERFORMANCE OF WORK BY CONTRACTOR (APR 1984)
1.20 ASBESTOS AND LEAD
1.21 PROFIT
1.22 LABOR CONDITIONS APPLICABLE TO TEMPORARY FACILITIES
1.23 DRAWING SCALES
1.24 WAGE RATE APPLICATION
1.24.1 [Enter Appropriate Subpart Title Here]
1.25 (FAR 52.222-23) NOTICE OF REQUIREMENT FOR AFFIRMATIVE ACTION TO ENSURE EQUAL EMPLOYMENT OPPORTUNITY FOR CONSTRUCTION (FEB 1999)
1.26 (EFARS 52.232-5001) CONTINUING CONTRACTS (MAR 1995)
1.27 (EFARS 52.236-5000) PLANT AND MATERIAL REMOVAL AFTER CONTRACT TERMINATION(MAR 1995)
1.28 FEDERAL HOLIDAYS

PART 2 NOT USED

PART 3 NOT USED

-- End of Document Table of Contents --

SECTION 00800

SPECIAL CONTRACT REQUIREMENTS
5/00, Rev 5/01

PART 1 GENERAL

Attachments:

General Wage Decision No. IA020031

1.1 COMMENCEMENT, PROSECUTION, AND COMPLETION OF WORK (APR 1984)

The Contractor shall commence work under this contract within ten (10) calendar days after the date of receipt by him of Notice to Proceed, prosecute said work diligently, and complete the entire work except seeding ready for use not later than 730 calendar days after receipt of Notice to Proceed. The time stated for completion shall include final cleanup of the premises. See drawing sheet CS-1 for project sequencing. (FAR 52.211-10)

1.1.1 Start Work

Evidence that the Contractor has started procurement of materials, preparation and submission of shop drawings, preparation of subcontracts, and other preparatory work will satisfy the requirement that work commence within ten (10) calendar days after receipt of Notice to Proceed. Therefore, work need not be commenced at the construction site within ten (10) calendar days.

1.2 Utility Relocations by the City of Sioux City

The areas in which the City will be relocating utilities during this contract are shown on drawing sheet CS-1. The Contractor will not be permitted to perform any channel grading, bridge demolition, excavation for retaining or flood walls, or any other work in areas indicated that might interfere with the City's contractor until utility relocations have been completed in those areas. Demolition of buildings and demolition of the Cook Street bridge are not expected to affect the City's utility relocations, and the Contractor may begin these work items upon receipt of Notice to Proceed. The City will have completed relocations in each area not later than the following dates:

Utility Relocation Area #1 July 1, 2002
Utility Relocation Area #2 October 15, 2002
Utility Relocation Area #3 January 15, 2003

1.3 Street Closures

Stone Park Boulevard construction shall be completed prior to closing Woodland Way. During Stone Park Boulevard construction, West Clifton Avenue and Woodland Way shall remain open to traffic.

1.4 LIQUIDATED DAMAGES-CONSTRUCTION (SEPT 2000)

(a) If the Contractor fails to complete the work within the time ,

the Contractor shall pay liquidated damages to the Government in the amount of $2,200 for each calendar day of delay until the work is completed or accepted.

(b) If the Government terminates the Contractor's right to proceed, liquidated damages will continue to accrue until the work is completed. These liquidated damages are in addition to excess costs of repurchase under the Termination clause. (FAR 52.211-12)

1.5 EXCEPTION TO COMPLETION TIME AND LIQUIDATED DAMAGES

In case the Contracting Officer determines that seeding, sodding, and/or planting and/or the specified maintenance thereof is not feasible during the construction period, such work will be excepted from the completion time and liquidated damages . This work shall be accomplished during the first seeding, sodding, and/or planting period and the specified maintenance period following the completion date.

1.6 CONTRACT DRAWINGS AND SPECIFICATIONS

1.6.1 SETS FURNISHED

The contractor shall be responsible for making copies of specifications including amendments. The bid drawings as amended shall be utilized in the performance of the work until contract drawings (i.e., bid drawings that have been posted with all amendment changes) are mailed to the Contractor. See Section 01040 As-Built Drawings for drawings being furnished to the Contractor. The work shall conform to the contract drawings, set out in the drawing index, all of which form a part of these specifications. The work shall also conform to the standard details bound or referenced herein.

1.6.2 NOTIFICATION OF DISCREPANCIES

The Contractor shall check all drawings furnished him immediately upon their receipt and shall promptly notify the Contracting Officer of any discrepancies. Dimensions marked on drawings shall be followed in lieu of scale measurements. Enlarged plans and details shall govern where the same work is shown at smaller scales. All scales shown are based on a standard drawing size of 28" x 40". If any other size drawings are furnished or plotted the contractor shall adjust the scales accordingly. The contractor shall also advise his sub-contractors of the above. The Contractor shall compare all drawings and verify the figures before laying out the work and will be responsible for any errors which might have been avoided thereby.

1.6.3 OMISSIONS

Omissions from the drawings or specifications or the misdescription of details of work which are manifestly necessary to carry out the intent of the drawings and specifications, or which are customarily performed, shall not relieve the Contractor from performing such omitted or misdescribed details of the work but they shall be performed as if fully and correctly set forth and described in the drawings and specifications.

1.7 PHYSICAL DATA (APR 1984)

Data and information furnished or referred to below is for the Contractors' information. The Government shall not be responsible for any interpretation of or conclusion drawn from the data or information by the Contractor.

a. The indications of physical conditions on the drawings and in the specifications are the result of site investigations by surveys and borings . The data shown graphically and by symbol for each respective boring represents the actual geologic features observed and logged at the location given on the drawings. While the borings are representative of subsurface conditions at their respective locations and for their respective vertical reaches, local minor variations characteristic of the subsurface materials of this region could occur.

b. Weather conditions shall have been investigated by the Contractor to satisfy himself as to the hazards likely to arise therefrom. Complete weather records and reports may be obtained from the local U.S. Weather Bureau.

c. Transportation facilities shall have been investigated by the Contractor to satisfy himself as to the existence of access highways and railroad facilities. (FAR 52.236-4)

d. Perry Creek Discharges The Contractor shall be aware of the range of possible discharges that could occur during the life of this contract. The Contractor shall make his own assumptions as to the effect of those discharges on the work to be performed, particularly where those flows could affect the bid. Attached at the end of this section are flow duration discharge tables, risk tables, discharge frequency curves, and a table of seasonal maximum daily discharges. The discharge frequency relationship and the risk table were developed specifically for the project location. The Government will assume no responsibility for damages resulting from Perry Creek or Missouri River discharges except as stated in paragraph: DAMAGE TO WORK. The flow duration discharge relationships for Perry Creek are based on 37 years of U.S.G.S. gaging record data at the 38th Street gage. The flow duration discharge relationships are based on 25 years of historical data. It must be noted that the flow duration-discharge tables are based on mean daily flows. This is of particular importance for Perry Creek because the instantaneous peak discharge can be significantly higher than the mean daily flow.

1.8 PAYMENT

1.8.1 PROMPT PAYMENT ACT

Pay requests authorized in CONTRACT CLAUSES clause: "Payments Under Fixed-Price Construction Contracts", will be paid pursuant to the clause, "Prompt Payment for Construction Contracts". Pay requests will be submitted on ENG Form 93 and 93a, "Payment Estimate-Contract Performance" and "Continuation". All information and substantiation required by the identified contract clauses will be submitted with the ENG Form 93, and the required certification will be included on the last page of the ENG Form 93a, signed by an authorized contractor official and dated when signed. The designated billing office is the Office of the Area Engineer.

1.8.2 PAYMENTS FOR MODIFICATIONS

Payments may be made for cost bearing change orders within the scope of the contract only to the extent funds are authorized in the order on a two-part modification. Contractor pricing proposed must be submitted at the earliest possible time after the change order is issued, or at a specific time as directed by the Contracting Officer. At the discretion of the

Contracting Officer, any and all payments may be withheld on the modification until the Contractor has submitted a qualifying price proposal, in as much detail as required by the Contracting Officer, and the final price has been agreed.

1.8.3 PAYMENT FOR MATERIALS DELIVERED OFFSITE (MAR 1995)

a. Pursuant to FAR clause 52.232-5, Payments Under Fixed Priced Construction Contracts, materials delivered to the contractor at locations other than the site of the work may be taken into consideration in making payments if included in payment estimates and if all the conditions of the General Provisions are fulfilled. Payment for items delivered to locations other than the work site will be limited to: (1) materials required by the technical provisions; or (2) materials that have been fabricated to the point where they are identifiable to an item of work required under this contract.

b. Such payment will be made only after receipt of paid or receipted invoices or invoices with canceled check showing title to the items in the prime contractor and including the value of material and labor incorporated into the item. Payment for materials delivered off-site includes petroleum products. (List additional items for which payments will be made for off-site delivery.) (EFAR 52.232-5000)

1.9 DAMAGE TO WORK

The responsibility for damage to any part of the permanent work shall be as set forth in the CONTRACT CLAUSES clause: "Permits and Responsibilities." However, if, in the judgment of the Contracting Officer, any part of the permanent work performed by the Contractor is damaged by flood or earthquake, which damage is not due to the failure of the Contractor to take reasonable precautions or to exercise sound engineering and construction practices in the conduct of the work, the Contractor will make the repairs as ordered by the Contracting Officer and full compensation for such repairs will be made at the applicable contract unit or lump sum prices as fixed and established in the contract. If, in the opinion of the Contracting Officer, there are no contract unit or lump sum prices applicable to any part of such work an equitable adjustment pursuant to CONTRACT CLAUSES clause: "Changes," of the contract will be made as full compensation for the repairs of that part of the permanent work for which there are no applicable contract unit or lump sum prices. Except as herein provided, damage to all work (including temporary construction), utilities, materials, equipment and plant shall be repaired to the satisfaction of the Contracting Officer at the Contractor's expense, regardless of the cause of such damage.

1.10 AVAILABILITY AND USE OF UTILITY SERVICES

Use of public and private utilities will be as found available. The Contractor shall make his own arrangements for use of public and private utilities.

1.11 QUANTITY SURVEYS (APR 1984)

a. Quantity surveys shall be conducted, and the data derived from these surveys shall be used in computing the quantities of work performed and the actual construction completed and in place.

b. The Contractor shall conduct the original and final surveys and

surveys for any periods for which progress payments are requested. All these surveys shall be conducted under the direction of a representative of the Contracting Officer, unless the Contracting Officer waives this requirement in a specific instance. The Contractor shall make such computations as are necessary to determine the quantities of work performed or finally in place. The Contractor shall make the computations based on the surveys for any periods for which progress payments are requested. All computations shall be readily available for review by the Contracting Officer.

c. Promptly upon completing a survey, the Contractor shall furnish the originals of all field notes and all other records relating to the survey or to the layout of the work to the Contracting Officer, who shall use them as necessary to determine the amount of progress payments. The Contractor shall retain copies of all such material furnished to the Contracting Officer. (FAR 52.236.16)

1.12 TIME EXTENSIONS FOR UNUSUALLY SEVERE WEATHER

a. This clause specifies the procedure for the determination of time extensions for unusually severe weather in accordance with the contract clause entitled "Default: (Fixed-Price Construction)." In order for the Contracting Officer to award a time extension under this clause, the following conditions must be satisfied:

(1) The weather experienced at the project site during the contract period must be found to be unusually severe, that is, more severe than the adverse weather anticipated for the project location during any given month.

(2) The unusually severe weather must actually cause a delay to the completion of the project. The delay must be beyond the control and without the fault or negligence of the contractor.

b. The following schedule of monthly anticipated adverse weather delays is based on National Oceanic and Atmospheric Administration (NOAA) or similar data for the project location and will constitute the base line for monthly weather time evaluations. The contractor's progress schedule must reflect these anticipated adverse weather delays in all weather dependent activities.

MONTHLY ANTICIPATED ADVERSE WEATHER DELAY
WORK DAYS BASED ON (5) DAY WORK WEEK

JAN	FEB	MAR	APR	MAY	JUN	JUL	AUG	SEP	OCT	NOV	DEC
(20)	(14)	(07)	(05)	(06)	(08)	(05)	(04)	(04)	(03)	(03)	(16)

c. Upon acknowledgment of the Notice to Proceed (NTP) and continuing throughout the contract, the contractor will record on the daily CQC report, the occurrence of adverse weather and resultant impact to normally scheduled work. Actual adverse weather delay days must prevent work on critical activities for 50 percent or more of the contractor's scheduled work day. The number of actual adverse weather delay days shall include days impacted by actual adverse weather (even if adverse weather occurred in previous month), be calculated chronologically from the first to the last day of each month, and be recorded as full days. If the number of actual adverse weather delay days exceeds the number of days anticipated in paragraph b. above, the contracting officer will convert any qualifying

delays to calendar days, giving full consideration for equivalent fair weather work days, and issue a modification in accordance with the contract clause entitled "Default (Fixed Price Construction)". (ER 415-1-15)

1.13 INSURANCE REQUIRED

In accordance with CONTRACT CLAUSES clause: "Insurance Work on a Government Installation," the Contractor shall procure the following minimum insurance:

Type	Amount
Workmen's Compensation and Employer's Liability Insurance	$100,000
General Liability Insurance	$500,000 per occurrence
Automobile Liability Insurance	
Bodily injury	$200,000 per person and $500,000 per occurrence
Property damage	$ 20,000 per occurrence

(Coverages per FAR 28.307-2)

1.14 CONTRACTOR QUALITY CONTROL (CQC)

See Section 01451 Contractor Quality Control.

1.15 NONDOMESTIC CONSTRUCTION MATERIALS

The List of nondomestic construction materials or their components included in the list set forth in paragraph 25.104 of the Federal Acquisition Regulation does not apply to the requirements of the contract clause entitled "Buy American Act Construction Materials".

1.16 DAILY WORK SCHEDULES

In order to closely coordinate work under this contract, the Contractor shall prepare a written agenda/meeting minutes and attend a weekly coordination meeting with the Contracting Officer and Using Service at which time the Contractor shall submit for coordination and approval, his proposed daily work schedule for the next two week period. The Contractor shall provide a copy of modifications (MODs), Serial Letters, Requests for Information (RFIs)and any other innformation that is needed in the minutes of the meeting. Required temporary utility services, time and duration of interruptions, and protection of adjoining areas shall be included with the Contractor's proposed 2-week work schedule. At this meeting, the Contractor shall also submit his schedule of proposed dates and times of all preparatory inspections to be performed during the next 2 weeks. The items of work listed on the proposed 2-week schedule are to be keyed to the NAS by activity number and description for each activity anticipated to be performed during the next 2-week period. Coordination action by the Contracting Officer relative to these schedules will be accomplished during these weekly meetings. Daily reports shall be completed and given to the Contracting Officer or Representative within 24 hours of work

1.17 EQUIPMENT OWNERSHIP AND OPERATING EXPENSE SCHEDULE (MAR 1995)

a. This statement shall become operative only for negotiated contracts where cost or pricing data is requested, and for modifications to sealed

bid or negotiated contracts where cost or pricing data is requested. This clause does not apply to terminations. See 52.249-5000, Basis for settlement of proposals and FAR Part 49.

b. Allowable cost for construction and marine plant and equipment in sound workable condition owned or controlled and furnished by a Contractor or subcontractor at any tier shall be based on actual cost data for each piece of equipment or groups of similar serial and series for which the Government can determine both ownership and operating costs from the Contractor's accounting records. When both ownership and operating costs cannot be determined for any piece of equipment or groups of similar serial or series of equipment from the Contractor's accounting records, costs for that equipment shall be based upon the applicable provisions of EP 1110-1-8, "Construction Equipment Ownership and Operating Expense Schedule," Region IV. Copies of each regional schedule may be obtained through the following internet site: http://www.usace.army.mil/inet/usace-docs/eng-pamphlets/ep.htm. Working conditions shall be considered to be average for determining equipment rates using the schedule unless specified otherwise by the Contracting Officer. For equipment not included in the schedule, rates for comparable pieces of equipment may be developed using the formula provided in the schedule. For forward pricing, the Schedule in effect at the time of negotiations shall apply. For retrospective pricing, the Schedule in effect at the time the work was performed shall apply.

c. Equipment rental costs are allowable, subject to the provisions of FAR 31.105(d)(ii) and FAR 31.205-36. Rates for equipment rented from an organization under common control, lease-purchase arrangements, and sale-leaseback arrangements will be determined using the schedule, except that actual rates will be used for equipment leased from an organization under common control that has an established practice of leasing the same or similar equipment to unaffiliated lessees.

d. When actual equipment costs are proposed and the total amount of the pricing action exceeds the small purchase threshold, the contracting officer shall request the contractor to submit either certified cost or pricing data, or partial/limited data as appropriate. The data shall be submitted on Standard Form 1411, Contract Pricing Proposal Cover Sheet. (EFARS 52.231-5000)

1.18 AS-BUILT DRAWINGS

See SECTION 01040 - AS-BUILT DRAWINGS

1.19 PERFORMANCE OF WORK BY CONTRACTOR (APR 1984)

The Contractor shall perform on the site, and with its own organization, work equivalent to at least twenty (20) percent of the total amount of work to be performed under the contract. This percentage may be reduced by a supplemental agreement to this contract if, during performing the work, the Contractor requests a reduction and the Contracting Officer determines that the reduction would be to the advantage of the Government. (FAR 52.236-1)

1.20 ASBESTOS AND LEAD

a. The Contractor is warned that inhalation of asbestos and lead has been associated with health hazards.

b. Asbestos-containing materials have been identified in area(s) where

contract work is to be performed. All contract work activities where the potential exists for worker exposure to airborne asbestos fibers shall be performed in accordance with the requirements set forth in SECTION 13280 ASBESTOS ABATEMENT.

c. Lead has been determined to be present in some painted surfaces which are scheduled for removal/renovation. See SECTION 01400 SPECIAL SAFETY PROCEDURES for locations and proper procedures.

1.21 PROFIT

a. Weighted guidelines method of determining profit shall be used on any equitable adjustment change order or modification issued under this contract. The profit factors shall be as follows:

Factor	Rate	Weight	Value
Degree of Risk	20		
Relative difficulty of work	15		
Size of Job	15		
Period of performance	15		
Contractor's investment	5		
Assistance by Government	5		
Subcontracting	25		
	100		

b. Based on the circumstances of each procurement action, each of the above factors shall be weighted from .03 to .12 as indicated below. The value shall be obtained by multiplying the rate by the weight. The value column when totalled indicates the fair and reasonable profit percentage under the circumstances of the particular procurement.

(1) Degree of Risk. Where the work involves no risk or the degree of risk is very small, the weighting should be .03; as the degree of risk increases, the weighting should be increased up to a maximum of .12. Lump sum items will have, generally, a higher weighted value than the unit price items for which quantities are provided. Other things to consider: the portion of the work to be done by subcontractors, nature of work, where work is to be performed, reasonableness of negotiated costs, amount of labor included in costs, and whether the negotiation is before or after performance of work.

(2) Relative Difficulty of Work. If the work is most difficult and complex, the weighting should be .12 and should be proportionately reduced to .03 on the simplest of jobs. This factor is tied in to some extent with the degree of risk. Some things to consider: the nature of the work, by whom it is to be done, where, and what is the time schedule.

(3) Size of Job. All work not in excess of $100,000 shall be weighted at .12. Work estimated between $100,000 and $5,000,000 shall be proportionately weighted from .12 to .05.

(4) Periods of Performance. Jobs in excess of 24 months are to be weighted at .12. Jobs of lesser duration are to be proportionately

weighted to a minimum of .03 for jobs not to exceed 30 days. No weight where additional time not required.

(5) Contractor's Investment. To be weighted from .03 to .12 on the basis of below average, average, and above average. Things to consider: amount of subcontracting, mobilization payment item, Government furnished property, equipment and facilities, and expediting assistance.

(6) Assistance by Government. To be weighted from .12 to .03 on the basis of average to above average. Things to consider: use of Government-owned property, equipment and facilities, and expediting assistance.

(7) Subcontracting. To be weighted inversely proportional to the amount of subcontracting. Where 80 percent or more of the work is to be subcontracted, the weighting is to be .03 and such weighting proportionately increased to .12 where all the work is performed by the Contractor's own forces.

1.22 LABOR CONDITIONS APPLICABLE TO TEMPORARY FACILITIES

It is the position of the Department of Defense that the Davis-Bacon Act, 40 U.S.C. 276a is applicable to temporary facilities such as batch plants, sandpits, rock quarries, and similar operations, located off the immediate site of the construction but set up exclusively to furnish required materials for a construction project on the site of the work. Clause "Payrolls and Basic Records" of the CONTRACT CLAUSES is applicable to such operations.

1.23 DRAWING SCALES

All scales shown are based on a standard drawing size of 28" x 40" . If any other size drawings are furnished or plotted, the contractor shall adjust the scales accordingly. The Contractor shall also advise his sub-contractors of the above.

1.24 WAGE RATE APPLICATION

For copies of Wage Rates, See Attachment GENERAL WAGE DECISION.

Applicable to all work.

1.24.1 [Enter Appropriate Subpart Title Here]

1.25 (FAR 52.222-23) NOTICE OF REQUIREMENT FOR AFFIRMATIVE ACTION TO ENSURE EQUAL EMPLOYMENT OPPORTUNITY FOR CONSTRUCTION (FEB 1999)

(a) The offeror's attention is called to the Equal Opportunity clause and the Affirmative Action Compliance Requirements for Construction clause of this solicitation.

(b) The goals for minority and female participation, expressed in percentage terms for the Contractor's aggregate workforce in each trade on all construction work in the covered area, are as follows:

Goals for Minority Participation for Each Trade	Goals for Female Participation for Each Trade
**********	**********

for Woodbury County 1.9 6.9
for Plymouth County 1.2.

These goals are applicable to all the Contractor's construction work performed in the covered area. If the Contractor performs construction work in a geographical area located outside of the covered area, the Contractor shall apply the goals established for the geographical area where the work is actually performed. Goals are published periodically in the Federal Register in notice form, and these notices may be obtained from any Office of Federal Contract Compliance Programs Office.

(c) The Contractor's compliance with Executive Order 11246, as amended, and the regulations in 41 CFR 60-4 shall be based on (1) its implementation of the Equal Opportunity clause, (2) specific affirmative action obligations required by the clause entitled "Affirmative Action Compliance Requirements for Construction," and (3) its efforts to meet the goals. The hours of minority and female employment and training must be substantially uniform throughout the length of the contract, and in each trade. The Contractor shall make a good faith effort to employ minorities and women evenly on each of its projects. The transfer of minority or female employees or trainees from Contractor to Contractor, or from project to project, for the sole purpose of meeting the Contractor's goals shall be a violation of the contract, Executive Order 11246, as amended, and the regulations in 41 CFR 60-4. Compliance with the goals will be measured against the total work hours performed.

(d) The Contractor shall provide written notification to the Deputy Assistant Secretary for Federal Contract Compliance, U.S. Department of Labor, within 10 working days following award of any construction subcontract in excess of $10,000 at any tier for construction work under the contract resulting from this solicitation. The notification shall list the -

(1) Name, address, and telephone number of the subcontractor;

(2) Employer identification number of the subcontractor;

(3) Estimated dollar amount of the subcontract;

(4) Estimated starting and completion dates of the subcontract; and

(5) Geographical area in which the subcontract is to be performed.

(e) As used in this Notice, and in any contract resulting from this solicitation, the "covered area" is Sioux City SMSA-7720, for Woodbury County and Sioux City EA-103, for Plymouth County.

1.26 (EFARS 52.232-5001) CONTINUING CONTRACTS (MAR 1995)

a. This is a continuing contract, as authorized by Section 10 of the River and Harbor Act of September 22, 1922 (33 U.S. Code 621). The payment of some portion of the contract price is dependent upon reservations of funds from future appropriations, and from future contributions to the project having one or more non-federal project sponsors. The responsibilities of the Government are limited by this clause notwithstanding any contrary provision of the "Payments to Contractor" clause or any other clause of this contract.

b. The sum of $50,000 has been reserved for this contract and is available

for payments to the Contractor during the current fiscal year. It is expected that Congress will make appropriations for future fiscal years from which additional funds together with funds provided by one or more non-federal project sponsors will be reserved for this contract.

c. Failure to make payments in excess of the amount currently reserved, or that may be reserved from time to time, shall not entitle the Contractor to a price adjustment under the terms of this contract except as specifically provided in certain paragraphs below. No such failure shall constitute a breach of this contract, except that this provision shall not bar a breach-of-contract action if an amount finally determined to be due as a termination allowance remains unpaid for one year due solely to a failure to reserve sufficient additional funds therefor.

d. The Government may at any time reserve additional funds for payments under the contract if there are funds available for such purpose. The Contracting Officer will promptly notify the Contractor of any additional funds reserved for the contract by issuing an administrative modification to the contract.

e. If earnings will be such that funds reserved for the contract will be exhausted before the end of any fiscal year, the Contractor shall give written notice to the Contracting Officer of the estimated date of exhaustion and the amount of additional funds which will be needed to meet payments due or to become due under the contract during that fiscal year. This notice shall be given not less than 45 nor more than 60 days prior to the estimated date of exhaustion.

f. No payments will be made after exhaustion of funds except to the extent that additional funds are reserved for the contract. The Contractor shall be entitled to simple interest on any payment that the Contracting Officer determines was actually earned under the terms of the contract and would have been made except for exhaustion of funds. Interest shall be computed from the time such payment would otherwise have been made until actually or constructively made, and shall be at the rate established by the Secretary of the Treasury pursuant to Public Law 92-41, 85 STAT 97, as in effect on the first day of the delay in such payment.

g. Any suspension, delay, or interruption of work arising from exhaustion or anticipated exhaustion of funds shall not constitute a breach of this contract and shall not entitle the Contractor to any price adjustment under the "Suspension of Work" clause or in any other manner under this contract.

h. An equitable adjustment in performance time shall be made for any increase in the time required for performance of any part of the work arising from exhaustion of funds or the reasonable anticipation of exhaustion of funds.

i. If, upon the expiration of sixty (60) days after the beginning of the fiscal year following an exhaustion of funds, the Government has failed to reserve sufficient additional funds to cover payments otherwise due, the Contractor, by written notice delivered to the Contracting Officer at any time before such additional funds are reserved, may elect to treat his right to proceed with the work as having been terminated. Such a termination shall be considered a termination for the convenience of the Government.

j. If at any time it becomes apparent that the funds reserved for any fiscal year are in excess of the funds required to meet all payments due or

to become due the Contractor because of work performed and to be performed under the contract during the fiscal year, the Government reserves the right, after notice to the Contractor, to reduce said reservation by the amount of such excess.

1.27 (EFARS 52.236-5000) PLANT AND MATERIAL REMOVAL AFTER CONTRACT TERMINATION(MAR 1995)

Should this contract be terminated as provided in clause 52.232-5001 because of the failure of Congress to provide additional funds for its completion, the contractor may be permitted to remove plant and material on which payments for preparatory work have been made, subject to an equitable deduction from the amounts due the contractor to reimburse the United States for the unabsorbed value of such plant and material.

1.28 FEDERAL HOLIDAYS

The following Federal legal holidays are observed by this installation:

New Year's Day	1 January
Martin Luther King's Birthday	Third Monday in January
President's Day	Third Monday in February
Memorial Day	Last Monday in May
Independence Day	4 July
Labor Day	First Monday in September
Columbus Day	Second Monday in October
Veterans Day	11 November
Thanksgiving Day	Fourth Thursday in November
Christmas Day	25 December

If a wage determination applies the number of holidays specified on it, it has priority over this clause.

PART 2 NOT USED

PART 3 NOT USED

-- End of Section --

GENERAL DECISION IA020031 05/03/02 IA31

General Decision Number IA020031

Superseded General Decision No. IA010031

State: Iowa

Construction Type:
RIVER WORK

County(ies):
STATEWIDE

SCOTT COUNTY: POWER EQUIPMENT OPERATORS ONLY

HEAVY CONSTRUCTION PROJECTS FOR WORK ON OR PERTAINING
TO THE MISSISSIPPI AND MISSOURI RIVERS.

Modification Number	Publication Date
0	03/01/2002
1	05/03/2002

COUNTY(ies):
STATEWIDE

ENGI0150I 01/01/2002

	Rates	Fringes
POWER EQUIPMENT OPERATORS:		
GROUP 1:	22.80	10.65
GROUP 2:	22.80	10.65
GROUP 3:	20.15	10.65
GROUP 4:	20.15	10.65
GROUP 5:	19.10	10.65

POWER EQUIPMENT OPERATOR CLASSIFICATIONS

GROUP 1:Cranes; Shovel; Clamshell; Dragline; Backhoe; Derrick; Tower Crane; Cable Way; Concrete Spreaders (servicing 2 pavers); Asphalt Spreaders; Asphalt Mixer; Plant Engineers; Dipper Dredge Operator; Dipper Dredge Cranemen; Dual Purpose Trucks (Boom or Winch); Leverman or Engineman (Hydraulic Dredge); Mechanics; Paving Mixer with tower attached (two operators required); Piledriver; Boom Tractor, Stationary, Portable or Floating Mixing Plant; Trenching Machine (over 40 HP), Building Hoist (2 drums), Hot Paint Wrapping Machine; Cleaning & Priming Machine, Backfiller (throw bucket), Locomotive Engineer; qualified Welder; Tow or Push Boat; Concrete Paver; Seaman trav-L-plant or similar Machine; CMI Autograder or similar machine; Slip Form Paver; Caisson Augering Machine, Mucking Machine, Asphalt Heat Planer Unit; Hydraulic Cranes; Mine Hoists.

Group 2: Athey; Barber-Green; Euclid or Haiss loader; Asphalt Pug Mill; Fireman & Drier; Concrete Pump; Concrete Spreader(servicing 1 paver); Bulldozer; Endloader; Log Chippers or similar machines; Elevating Grader;Group Equipment Greaser, LeTourneaupul & similar machines; DW-10; Hyster Winch & similar machines; Motor

Patrol; Power Blade; Push Cat; Tractor pulling elevating grader or power blade; Tractor operating scoop or scraper, Tractor with power Attachments; Roller on Asphalt or Blacktop; single drum hoist; Jaeger mix & Plant Machine; Pipe bending Machine; Flexaplane or similar Machine, Automatic Curbing Machine; Automatic Cement & Gravel batch plants (1 stop set-up); Seaman pulvi-mixer or similar Machine, Blastholer; Self-propelled Rotary Drill or similar Machines; Work Boat; Combination concrete finishing & float; Self-propelled sheep foot roller or compactor (used in conjunction with a grading spread); Asphalt Spreader Screed Operator; Slusher; Apsco Spreader or similar Machine; Forklift (over 6000 lbs. capacity or working at heights above 28 ft.); Concrete Conveyors, Chip Spreader; Underground Boring Machine; Straddle Carrier; Hydro-Hammer; Hydraulic Pumps or power

Units driven by any power source (except manually); used to hoist or lift machinery or material; Off Road Haul Units.

GROUP 3: Asphalt Boosters; Firemen and Pump Operators at Asphalt Plants; Mud Jack; Concrete Finishing Machine, Form Grader with Roller on Earth; Mixers (3 Bag to 16-E); Power Operated Bull Float; Tractors without Power Attachments; Dope Pots (Agitating Motor); Dope Chop Machines; Distributors (back end); Portable Machine Fireman; Power winch on paving work; self-propelled roller or compactor (other than provided for above); Pump Operator (more than one well-point pump); Portable Crusher Operator, Trench Machine (under 40 hp); Power Subgrader (on forms) or similar machines, Forklift (6000 lb. or less cap.); Gypsum Pump; Conveyor over 20 hp.; Fuller Kenyon Cement Pump or similar machines.

GROUP 4: Light Plant; Mixers (1 or 2 bag); Power Batching Machine (Cement Auger or Conveyor); Boiler (Engineer or Fireman); Mechanical Broom; Automatic Cement and Gravel Batch Plants (two or three stop set-up); Small rubber-tired Tractors (nor including backhoe or endloaders); Self-propelled Curing Machine; Driver on Truck crane or similar machines.

GROUP 5: Oilers; Mechanical Heater (other than Steam Boiler), Belt Machine, Small Outboard Motor Boats Safety Boat & Lift Boat), Engine Driven Welding Machine & Small tractors (used to unroll wire mesh), Water Pumps, Air Compressors, Permanent Automatic Elevators.

---

* ENGI0234G 12/01/2001

	Rates	Fringes
REMAINING COUNTIES (with the exception of CLINTON COUNTY South to the State of MISSOURI on the Mississippi River)		
POWER EQUIPMENT OPERATORS:		
GROUP 1	22.15	8.55
GROUP 2	21.50	8.55
GROUP 3	19.20	8.55

POWER EQUIPMENT OPERATOR CLASSIFICATIONS

GROUP 1: Power shovel, crane, backhoe (1.5 yd and over), dragline, hoisting engineer (steel erection), motor patrol (finish), piledriver, master mechanic, sideboom tractor, horizontal boring machine, finish dozer, central mix plant, paver or self propelled spreader, tow safety, or push boat, CMI paver, subgrader or equivalent, asphalt plant, pushcat, mechanics - welders, churn or rotary drill, trenching machine (Cleveland 80 or similar capacity), asphalt laydown, asphalt screed, asphalt heater planer, concrete pump, self-propelled curb machine (with seat), loader operator (2 cu yd and over), scraper, dozer (rough), group greaser, asphalt roller, backhoes of any size when digging building footings.

GROUP 2: Motor patrol (rough), concrete curb breaking

machine, loader (under 2 yd), backhoe under 1/2 yd, concrete widening machine, paver breaker, Barber Green, Haiss loader or similar machines, crawler tractor (pulling disc, sheepsfoot, ripper, or flat roller), self-propelled sheepsfoot roller, self-propelled roller, dristributor, screening and washing plant, self-propelled vibrating compactor, trenching machine, steel placing machine, conveyor, finishing machine (on concrete), flex plane, bullfloat, form grader, self-propelled elevator grader, water wagon on compaction

GROUP 3: Boiler, mechanical boom, oiler, welding machine, Pump (other than dredge), boom and winch trucks, compressor, tank car heater (combination boiler and booster), pumps on well points and deep wells for dewatering, truck crane combination driver-oiler, concrete curbing machine, batch plant (dry), spreader attachments, utility tractor with attachments, light plant mechanical heater, pumps over 3", farm type tractor (pulling disc, harrow or roller).

---

* SUIA5016A 12/01/2001

	Rates	Fringes
Carpenters	20.50	4.95
Cement Masons	19.82	4.35
Laborers:		
Class 1	20.93	4.40
Class 2	19.93	4.40
Class 3	16.25	4.40
IRONWORKERS: (setting of all structural steel and reinforcing steel installation:		
Woodbury & Monona Counties	17.76	5.92
Harrison, Pottawattamie, Mills & Fremont Counties	20.40	6.82
Dubuque, Clayton &		

Allamakee Counties	19.96	9.03
Jackson, Clinton, Louisa & Muscatine Counties	21.58	12.02
Des Moines and Lee Counties	19.85	9.06
TRUCK DRIVERS	18.25	5.50

WELDERS - Receive rate prescribed for craft performing operation to which welding is incidental.

==========

Unlisted classifications needed for work not included within the scope of the classifications listed may be added after award only as provided in the labor standards contract clauses (29 CFR 5.5(a)(1)(v)).

In the listing above, the "SU" designation means that rates listed under that identifier do not reflect collectively bargained wage and fringe benefit rates. Other designations indicate unions whose rates have been determined to be prevailing.

WAGE DETERMINATION APPEALS PROCESS

1.) Has there been an initial decision in the matter? This can be:

* an existing published wage determination
* a survey underlying a wage determination
* a Wage and Hour Division letter setting forth a position on a wage determination matter
* a conformance (additional classification and rate) ruling

On survey related matters, initial contact, including requests for summaries of surveys, should be with the Wage and Hour Regional Office for the area in which the survey was conducted because those Regional Offices have responsibility for the Davis-Bacon survey program. If the response from this initial contact is not satisfactory, then the process described in 2.) and 3.) should be followed.

With regard to any other matter not yet ripe for the formal process described here, initial contact should be with the Branch of Construction Wage Determinations. Write to:

Branch of Construction Wage Determinations
Wage and Hour Division
U. S. Department of Labor
200 Constitution Avenue, N. W.
Washington, D. C. 20210

2.) If the answer to the question in 1.) is yes, then an

interested party (those affected by the action) can request review and reconsideration from the Wage and Hour Administrator (See 29 CFR Part 1.8 and 29 CFR Part 7). Write to:

Wage and Hour Administrator
U.S. Department of Labor
200 Constitution Avenue, N. W.
Washington, D. C. 20210

The request should be accompanied by a full statement of the interested party's position and by any information (wage payment data, project description, area practice material, etc.) that the requestor considers relevant to the issue.

3.) If the decision of the Administrator is not favorable, an interested party may appeal directly to the Administrative Review Board (formerly the Wage Appeals Board). Write to:

Administrative Review Board
U. S. Department of Labor
200 Constitution Avenue, N. W.
Washington, D. C. 20210

4.) All decisions by the Administrative Review Board are final.

END OF GENERAL DECISION

SECTION TABLE OF CONTENTS

DIVISION 01 - GENERAL REQUIREMENTS

SECTION 01040

AS-BUILT DRAWINGS

PART 1 GENERAL

1.1 DEFINITIONS
1.1.1 Red-Line Drawings
1.1.2 As-Built Drawings
1.1.3 Final Shop Drawings
1.1.4 Vellum Drawings
1.1.5 Black-Line Drawings
1.1.6 Full-Size Drawings
1.1.7 Half-Size Drawings
1.1.8 Modification Circle
1.1.9 Mylar Drawings
1.1.10 Electronic CADD Files
1.2 GENERAL REQUIREMENTS
1.3 PAYMENT
1.4 TRANSMITTAL OF AS-BUILT DRAWINGS
1.4.1 As-Built Drawings
1.5 PROCEDURE
1.6 TITLE BLOCKS
1.7 PROCEDURES FOR POSTING MODIFICATION CHANGES TO DRAWINGS
1.8 WORD ABBREVIATIONS
1.9 LEGEND SHEETS
1.10 CONTRACTOR SHOP DRAWINGS
1.11 INDEXING OF DRAWINGS

PART 2 PRODUCTS (NOT APPLICABLE)

PART 3 EXECUTION

3.1 GENERAL
3.2 SITE WORK
3.2.1 Utilities
3.2.2 Structures
3.2.3 Grades
3.3 STRUCTURAL
3.3.1 Steel
3.4 ELECTRICAL
3.4.1 PANELS
3.4.2 Controls

-- End of Section Table of Contents --

SECTION 01040

AS-BUILT DRAWINGS
5/00 (Rev June 2001)

PART 1 GENERAL

1.1 DEFINITIONS

The definitions listed below form a part of this specification.

1.1.1 Red-Line Drawings

Contract drawings marked-up to show actual work performed to include necessary sketches, modification drawings, shop drawings and notes. Green ink is used to indicate work deleted from the contract. Red ink is used for additions and deviations from the contract. Red-Line Drawings shall reflect as-built conditions, revisions shown on the drawings and noted on the title block.

1.1.2 As-Built Drawings

Professional finished electronic CADD files developed from the original contract drawings that include all of the information from the Red-Line Drawings and suitable for half-size reproduction.

1.1.3 Final Shop Drawings

Shop drawings utilized by the Contractor that reflect the final, as-built condition of the required system or structure with all changes fully incorporated. Final Shop Drawings also include initial, intermediate, and final topographic surveys or cross-sections of the constructed works whether to calculate quantites or otherwise. These drawings are expected to be in the form of electronic CADD files.

1.1.4 Vellum Drawings

Drawings on erasable Vellum 20# similar or equal to Xerox Zero solvent vellum.

1.1.5 Black-Line Drawings

Paper drawings reproduced from vellum drawings and suitable for microfilming.

1.1.6 Full-Size Drawings

28 inches x 40 inches nominal size drawings with all details visually readable.

1.1.7 Half-Size Drawings

14 inches x 20 inches nominal size drawings with all details visually readable.

1.1.8 Modification Circle

A circle with a horizontal line through the center. The top half will contain the letter "P" with the bottom half containing the Modification number. The lettering standard will be 120/6 WRICO or similar.

1.1.9 Mylar Drawings

Drawings on polyester film, 3 or 5 mil, similar or equal to K & E Stabilene.

1.1.10 Electronic CADD Files

Electronic CADD files are files saved on CD-ROM in accordance with appropriate CADD standard. The CADD standard will include level on/off status, special characters, line wieghts, font, and size requirements.

1.2 GENERAL REQUIREMENTS

The work includes creation of two separate sets of red-lined, full scale as-built drawings marked-up to fully indicate as-built conditions. In addition to the marked-up contract drawings, these Red-Line drawings shall include the Final Shop Drawings of all systems designed or enhanced by the Contractor, and cross-sections at specified intervals, topographic surveys of excavation, final grade and other intermediate surveys used to calculate quantities. The Contractor shall submit a full-size Red-Line drawing and either an electronic CADD file on AutoCAD R14 or Microstation SE (or higher) to accurately depict existing conditions of the project, or a manually complete set of shop drawings. The Contractor shall be responsible for development of electronic CADD files in accordance with Omaha District CADD standards. Omaha District's CADD standards are located on the Omaha District's FTP site (ftp://ftp.nwo.usace.army.mil/pub/ED/CADD/ae/standards/ACADstd.pdf) for AutoCADD and (ftp://ftp.nwo.usace.army.mil/pub/ED/CADD/ae/standards/Caddstd.PDF) for Microstation. The Red-Line Drawings shall include all major features of the work and all details to the same level as the original contract set of drawings. All changes from the contract drawings shall be included in the Red-Line Drawings, including but not limited to all deviations, additional information, and modifications to the contract. Where contract drawings or specifications allow for options, only the option selected and actually constructed shall be shown on the Red-Line Drawings. Systems designed or enhanced by the Contractor such as HVAC control system, fire alarm system fire sprinkler system, irrigation sprinkler system, letters of clarification, shall be accurately and neatly recorded on the Red-Line Drawings using the same symbols, terminology, and general quality as the original set of contract drawings. All sheets affected by a change shall be revised. The transmittal requirements for the As-Built Drawings shall be shown as events on the Contractor prepared progress chart or network analysis system (NAS), whichever is applicable. The approved Red-Line Drawings together with the Final Shop Drawings will be utilized by the Government in creation of the As-Built Drawings. The As-Built Drawings will become the permanent record drawings of construction.

1.3 PAYMENT

In accordance with the clause "Payment Under Fixed - Price Construction Contracts", which provides for progress payments on estimates of work accomplished (which meets the standards of quality established under the contract), $80,500 will be withheld from payment for the creation of Red-Line Drawings until the Electronic CADD Files, Red-Line Drawings, and

Final Shop Drawings are delivered to the Contracting Officer (including any necessary revisions and subject to the approval of the Contracting Officer).

1.4 TRANSMITTAL OF AS-BUILT DRAWINGS

1.4.1 As-Built Drawings

The Government will produce As-Built Drawings from the Red-Line Drawings and Final Shop Drawings. The Red-Line Drawings shall include all changes. The Red-Line Drawings shall be submitted to the COR and Omaha District Office (CENWO-ED-DI) no earlier than the day of acceptance of the project and no later than thirty (30) days after the date on the acceptance letter for the Preliminary Drawing unless otherwise directed by the COR. (Note: Red-Line Drawings should not be forwarded to the customer. Corps of Engineers, Omaha District COR, will forward As-Built Drawings to the customer after Quality Review.) The Contractor shall submit to the COR: the 2 sets of Red-Line Drawings, and if electronic shop drawings are part of the Red-Line Drawings as in para. 1.2, 2 sets of CADD files on CD (folder name containing as-built files shall be designated "AS-BUILTS" on each CD-ROM with Contract No.). The COR shall send Omaha District Office (ATTN: CENWO-ED-DI, Jim Janicek) the following documents: 1 set one Red-Line Drawings and 1 set of CADD files on a CD. The Contractor shall ensure that both CD case and CD contain the name of the project, location, specification number, and contract number, and words "As-Built Record Set"). The folder shall contain drawings, indexes and X-REF files related to all As-Built Drawings.

1.5 PROCEDURE

Within 30 days after Notice to Proceed, the Government will furnish the Contractor: (1) one full-size set of contract drawings on bond paperand (2) one CD containing the contract drawings and CADD standards in Microstation SE and Acrobat (pdf) format for use in plotting and in the preparation of Red-Line Drawings by the Contractor. The CD will be forwarded to the Resident Engineer. This CD will then be furnished to the Contractor after signed receipt to the Resident Engineer. The Contractor shall create 2 sets of full-size Red-Line Drawings to fully indicate As-Built conditions. The Red-Line Drawings shall be maintained at the site, in a current condition until the completion of the work and shall be available for review by the COR at all times. All as-built conditions shall be on the Red-Line Drawings within two (2) days after the work activity is completed or shall be entered on the deficiency tracking system (see Section 01451, CONTRACTOR QUALITY CONTROL).

1.6 TITLE BLOCKS

The contract number and the specification number (if available) shall be shown on all sheets. "RECORD DRAWING" shall be added below the title block on all sheets. All modifications to the contract shall be posted in ascending order. The top line of the revision box shall state "REVISED TO SHOW AS-BUILT CONDITIONS" and dated. All modifications to all plans, sections, or details, shall have a modification number placed in the revision box under column entitled "Symbol". The statement "GENERAL REVISIONS" may be used when applicable. The date to be added in the revision box for modifications is found in Block 3 of Form SF-30.Cover Sheet will have Contract Award Set changed to As-Built Record Set with month & year completed. Month and year completed will also go in the date box in the title block. There will be no separate dates.

1.7 PROCEDURES FOR POSTING MODIFICATION CHANGES TO DRAWINGS

Follow directions in the modification for posting descriptive changes.
A Modification Circle shall be place at the location of each deletion.
The highest modification number on the sheet should be shown in the modification circle in the "DATE" and "DRAWING CODE" boxes of the title block.
For all new details or sections that are added to a drawing, place a Modification Circle by the detail or section title.

For changes to a drawing, place a Modification Circle by the title of the affected plan, section or detail titles (each location).
For changes to schedules on drawings, a Modification Circle shall be placed either by the schedule heading or by the change in the schedule.
The Modification Circle size shall be 1/2-inch diameter unless the area where circle is to be placed is crowded. Use smaller size circle for crowded areas.

1.8 WORD ABBREVIATIONS

Abbreviations shown on the abbreviation sheet shall be used to describe all work items. Additional word abbreviations, not found on the abbreviation sheet but necessary to describe the work, shall be properly identified and incorporated with the other standard word abbreviations.

1.9 LEGEND SHEETS

Symbols, which conflict with those on the original contract legend sheet, shall not be used. Additional symbols, properly identified, necessary to depict any additional work items, shall be added to the legend sheet or supplemental legend. Those projects that do not have legend sheets may use supplemental legends on each sheet where symbol is shown.

1.10 CONTRACTOR SHOP DRAWINGS

Contractor shop drawings,which supersede data on the contract plans and/or additional drawings, prepared by the Contractor , shall be incorporated into the As-Built Drawings. Design plans prepared by Contractor shall include the designer's name on the As-Built Drawings.

1.11 INDEXING OF DRAWINGS

If drawings are added to the portfolio of drawings to depict as-built conditions, the index of drawings shall be revised accordingly.

PART 2 PRODUCTS (NOT APPLICABLE)

PART 3 EXECUTION

3.1 GENERAL

As-Built Drawings shall include as-built information to the same level of detail as shown on the original details, unless otherwise specified. The Contractor shall provide any additional full-size drawings as required to

display all the details.

3.2 SITE WORK

3.2.1 Utilities

All utilities shall be shown whether active, inactive, shown on the original contract drawings, or found on-site. The type of utility, location, general direction, size, material make-up and depth shall be shown. The location and description of any utility line or other installations of any kind known to exist within the construction area shall be shown. The location shall include dimensions to permanent features.

3.2.2 Structures

Structures above and below ground shall be shown. The size, material make-up, location, height, and/or depth shall be shown. Manholes shall show rim elevation and invert elevations as applicable. Power poles shall show electrical equipment and voltage rating.

3.2.3 Grades

Grade or alignment of roads, structures, or utilities shall be corrected if any changes were made from the contract drawings. Elevations shall be corrected if changes were made in site grading.

3.3 STRUCTURAL

3.3.1 Steel

Shop drawings that deviate from the contract drawings shall be incorporated in the Red-Line Drawings.

3.4 ELECTRICAL

3.4.1 PANELS

All contract drawing panel schedules shall be revised to show as-built conditions. Home-run circuit designation on electrical drawings shall accurately correspond to the as-built panel schedules.

3.4.2 Controls

All control diagrams in contract drawings shall be revised to reflect as-built conditions, and setpoints.

-- End of Section --

SECTION TABLE OF CONTENTS

DIVISION 01 - GENERAL REQUIREMENTS

SECTION 01200

CONSTRUCTION GENERAL

5/00 (Rev 10/00)

PART 1 GENERAL

1.1 SCOPE
1.2 CONSTRUCTION RIGHT-OF-WAY
1.3 PROTECTION OF EXISTING FACILITIES AND WORKS
1.3.1 Protection of Appurtenances from Bituminous Material Applications
1.3.2 Interruption of Electric Power
1.4 DIVERSION AND CARE OF WATER
1.4.1 Payment
1.5 DRAINAGE
1.6 DISPOSITION OF CONSTRUCTION FACILITIES
1.7 ACCESS ROADS AND HAUL ROADS
1.7.1 Access Roads
1.7.2 Haul Roads
1.7.3 Joint Use of Transportation Facilities
1.8 PUBLIC ROADS
1.8.1 Traffic Control
1.8.2 Operations
1.8.3 Barricades
1.8.4 State and Federal Highways
1.8.5 State and Local Public Roads
1.8.6 City Streets
1.8.7 Utility Lines
1.9 COOPERATION WITH OTHER CONTRACTORS
1.9.1 Coordination With Others
1.9.2 Coordination With Others
1.10 WORK BY OTHERS
1.11 ORDER OF WORK
1.12 SUBMITTALS
1.13 SPECIAL INSTRUCTIONS FOR PROGRESS CHARTS
1.14 PROJECT SIGN
1.15 AGGREGATE OR GRANULAR MATERIALS
1.16 WARRANTY OF CONSTRUCTION (MAR 1994)
1.17 ACCOMMODATIONS FOR GOVERNMENT PERSONNEL
1.18 PORTABLE TOILETS

PART 2 NOT USED

PART 3 NOT USED

-- End of Section Table of Contents --

SECTION 01200

CONSTRUCTION GENERAL
5/00 (Rev 10/00)

PART 1 GENERAL

Attachments: Standard Drawings Nos. OD15-9A12 and OD15-9A24

1.1 SCOPE

The work covered in this section is outlined as a statement of construction requirements common to all the work. Specific requirements for materials and installations are provided under the Technical Sections herewith. No claims for extras shall be made on account of items presumed to have been omitted from this section.

1.2 CONSTRUCTION RIGHT-OF-WAY

[The Contractor will be assigned construction areas or construction right-of-way limits for use in the prosecution of work under this contract, subject to the CONTRACT CLAUSES clause entitled "Operations and Storage Areas." In the event that the Contractor finds it necessary to utilize for any purpose whatsoever, additional right-of-way, plant or construction area for the performance of this contract, he will be required to do the following:

(1) Where the additional required area is owned or controlled by the Government, the area may be assigned to the Contractor upon request, provided the area is not needed for other purposes and provided there is no additional cost to the Government. All necessary grading and drainage shall be done at the Contractor's expense.

(2) Where the additional required right-of-way is not owned or controlled by the Government, the Contractor shall make all necessary arrangements for the utilization of the required area at no additional expense to the Government. Such arrangements shall be subject to the approval of the Contracting Officer, and copies of agreements for use of such rights-of-way shall be furnished the Contracting Officer before entering thereon. Such agreements shall clearly relieve the Government of any responsibility for damage resulting from the use of the grounds.]

1.3 PROTECTION OF EXISTING FACILITIES AND WORKS

The Contractor shall be responsible for the protection of the work area from damage and upon completion of the work shall leave existing works in a condition equal to that which existed when the work started. All work, storage of materials, and construction plant shall be kept within the limits of the areas assigned. Prior to construction operations, the Contractor shall confer with the Contracting Officer's representative to determine the proximity of any possible under-ground obstructions, pipe or equipment which could be damaged as a result of construction operations. Existing utility lines that are shown on the drawings or the locations are

otherwise made known to the Contractor shall be protected from damage, and if damaged, shall be repaired by the Contractor at no additional expense to the Government. In the event that the Contractor damages any existing utility lines that are not shown or the locations of which have not been made known to the Contractor, report thereof shall be made immediately to the Contracting Officer. If the Contracting Officer determines that repairs shall be made by the Contractor, such repairs will be ordered under CONTRACT CLAUSES clause entitled "Changes." The Contractor will be responsible for the protection of structures from any structural damage during the construction operations. Roads and surfaces shall be protected from damage by the work or if damaged shall be repaired with equal materials at no additional expense to the Government. At all times the plant and work areas shall be kept in a condition conducive to safety of workmen and the public and neat in appearance. Waste or surplus materials shall not be allowed to accumulate in the construction areas.

1.3.1 Protection of Appurtenances from Bituminous Material Applications

It shall be the responsibility of the Contractor to cover and protect the surfaces of roadway appurtenances, structures and installations by approved methods in advance of any bituminous material application adjacent thereto. Damages or defacement thereof shall be corrected as directed, by and at the expense of the Contractor.

1.3.2 Interruption of Electric Power

If it is necessary to cut off power in transmission lines that pass through construction areas, it shall be the Contractor's responsibility to make the necessary arrangements with the owner of the powerline, and the Contractor shall pay all costs therefor.

1.4 DIVERSION AND CARE OF WATER

Full responsibility for the diversion and care of water from whatever source, including direct rainfall, surface runoff and sources outside of the construction area shall be borne by the Contractor until completion of work under this contract. The Contractor shall have a registered professional engineer investigate and make a determination of existing and anticipated conditions concerning care of water. Perry Creek discharge data is shown in Section 00800 and is available from the U.S.G.S. Plans for diversion and care of water during construction shall be submitted (for information only) within 10 calendar days after receipt of Notice to Proceed, and shall show location, material and method for unwatering the work area and disposal of the water. The area to be occupied by new structures shall be unwatered and maintained in a "dry" condition until the concrete slabs and walls have been placed satisfactorily and cured in an approved manner. Diversion of the water shall be accomplished without additional disturbance of in-place bank material beyond the limits necessary for placement of structures.

1.4.1 Payment

Payment for diversion and care of water shall be included in the contract lump sum price for "All Remaining Work," which price shall constitute full compensation for all costs of diversion and care of water.

1.5 DRAINAGE

The Contractor shall provide and maintain ditches, dikes, and other

facilities within and adjacent to the work areas, to divert water from surface and subsurface flow away from work in place or under construction by this and other contracts to prevent damage and interference. The basis for design, location, type and size of drainage facilities are subject to review and approval prior to construction.

1.6 DISPOSITION OF CONSTRUCTION FACILITIES

All buildings and facilities constructed by the Contractor shall be maintained in a satisfactory condition with strict observance of the rules of sanitation, safety and order as may be established by the Contracting Officer. Prior to final payment under the contract, all buildings and facilities constructed by the Contractor for his own use shall be removed from the site by the Contractor.

1.7 ACCESS ROADS AND HAUL ROADS

1.7.1 Access Roads

Access roads as required for the prosecution of the work shall be maintained (including sprinkling for dust control, safety personnel, signals and control) within the work areas assigned to the Contractor. Consideration shall be given to the avoidance of interference with others, safety and frequency of traffic, subject to review and approval prior to construction. Access road areas shall be restored to their original or suitable condition upon completion of this contract. The Contractor shall be responsible for repair of damage to existing roads caused by his operation.

1.7.2 Haul Roads

The Contractor shall construct haul roads as may be necessary for the conduct of the work without additional cost to the Government. The Contractor shall arrange his hauling operations so as to cause a minimum interference with traffic and shall furnish flagmen and other facilities as required to avoid additional hazards to the public. Lines, grades and widths for haul roads, shall be selected to fulfill the requirements for safe and efficient hauling operations and shall be approved by the Contracting Officer prior to construction. Haul roads shall have ample width to provide safety. Preference shall be given to one-way haul roads when these are feasible. All roads shall be maintained in first class condition during all periods of their use. Roads shall be sprinkled whenever, in the opinion of the Contracting Officer, control of dust is necessary to insure safe movements of construction traffic. Upon completion of work under this contract, roads shall be disposed of as directed by the Contracting Officer. All signs, culverts, guards, fences and other improvements on roads constructed for the Contractor's convenience and operations shall be removed from the project site and shall remain his property. Use and repair of existing roads and bridges shall be subject to the requirements of local authorities. Prior to start of hauling operations on public roads, the Contractor shall furnish written evidence to the Contracting Officer that an agreement has been consummated with State and County officials on the use of public roads and bridges. Such agreements shall clearly relieve the Government of any responsibility for damage resulting from hauling across or on these roads.

1.7.3 Joint Use of Transportation Facilities

The Contractor may use jointly with contractors and others, existing access

and haul roads constructed by the Government or by others. Unless otherwise specifically authorized in writing, the Contractor will not be granted exclusive use of any access or haul road whether it be an existing road or one constructed by the Contractor. However, the use by others of roads constructed by or assigned to the Contractor primarily for his own use will be limited by the Contracting Officer to the minimum considered consistent with efficient prosecution of the work under this and other contracts in force. Maintenance of jointly used facilities shall be shared in proportion to use. In the event of a disagreement between this Contractor and others as to the use of any road, the decision of the Contracting Officer shall be final. The Contractor shall not obstruct any existing road on the land controlled by the Government.

1.8 PUBLIC ROADS

1.8.1 Traffic Control

The Contractor shall be responsible for the safe control of traffic on all haul and access roads used primarily for the work under these specifications and at their crossings with roads used by others. The Contractor shall, at his own expense, furnish all personnel, signal devices and signal necessary for the safe and efficient control of construction traffic on road systems used by the Contractor. A plan for traffic control, including a listing of equipment and its employment, shall be submitted for review and approval prior to construction.

1.8.2 Operations

When operations are being conducted near a U. S. or State Highway or when construction equipment is being used on or adjacent to such highway, the Contractor shall furnish signalmen and such warning signs as are necessary to provide adequate warning to the traveling public. The highways and streets shall be kept open at all times.

1.8.3 Barricades

At each location designated by the Contracting Officer and where safe operation requires the closing of roads, streets or other travel arteries leading to the work under this contract, the Contractor shall maintain a heavy plank barricade or other effective barrier during construction. Arrangements for closure of roads, streets or other travel arteries shall be made by the Contractor with local State, County or City officials. The Contractor shall notify the appropriate official in writing at least ten (10) days in advance of the date he desires to close a road to traffic and shall furnish a copy of the agreement to the Contracting Officer prior to closure. A satisfactory sign shall be placed on each barricade stating that the artery is closed. The cost of barricades shall be at the expense of the Contractor.

1.8.4 State and Federal Highways

Where the Contractor hauls across or on State or Federal highways, he shall enter into all agreements with the State Highway Commission and shall comply with any restrictions they may impose relative to load limits, care of traffic and cleanup. Such agreements shall clearly relieve the Government of any responsibility for damages resulting from hauling across or on State highways. Copies of such agreements shall be furnished to the Contracting Officer before the Contractor begins hauling on these highways.

1.8.5 State and Local Public Roads

(a) Load Limits:

The North Dakota Highway Commission and local County Road Commissions restrict the load weights of haul vehicles using highways and county roads during the spring thaw period. The load restrictions are usually imposed from 1 April through June depending on actual weather conditions.

(b) Hauling Regulations:

Prior to start of hauling operations on public roads, the Contractor shall furnish evidence to the Contracting Officer that an agreement has been consummated with State and County officials on the use of public roads and bridges. Such agreements shall clearly relieve the Government of any responsibility for damage resulting from hauling across or on these roads.

1.8.6 City Streets

Where the Contractor intends to cross or to use city streets for haul roads he shall enter into an agreement with the City and shall comply with any restrictions the City may impose relative to load limits, care of traffic and cleanup. Such agreements shall clearly relieve the Government of any responsibility for damage resulting from hauling across or on these highways. A copy of all such agreements shall be furnished the Contracting Officer before the Contractor begins hauling in city streets.

1.8.7 Utility Lines

It shall be the responsibility and obligation of the Contractor to make all arrangements with the affected companies for the necessary moving and alterations of utility lines and the continuation of service during construction as covered by the plans and specifications.

1.9 COOPERATION WITH OTHER CONTRACTORS

The Contractor shall cooperate and coordinate his work with that of the City and others working in the area during the life of this contract. The Contractor shall coordinate his work with others to avoid undue interference and shall conduct his operations, other than approved required access, within the limits of the assigned construction area or construction right-of-way limits. The Contractor shall cooperate with others as necessary in the interest of timely completion of all work and in the event of disagreement the decision of the Contracting Officer shall be final.

1.9.1 Coordination With Others

Public and private authorities and other Contractors of the U. S. Government work will be working in assigned work areas during the life of this contract. The Contractor shall coordinate his work with others to avoid undue interference and shall conduct his operations, other than approved required access, within the limits of the assigned construction area or construction right-of-way limits.

1.9.2 Coordination With Others

Other contractors on U. S. Government work (including Government personnel) may be working in the area during the life of this contract. The Contractor shall coordinate his work with others to avoid undue

interference and shall conduct his operations, other than approved required access, within the limits of the assigned construction area or construction right-of-way limits. The Contractor shall cooperate with others as necessary in the interest of timely completion of all work and in the event of disagreement the decision of the Contracting Officer shall be final.

1.10 WORK BY OTHERS

Public and private authorities may be working in the area during the life of this contract. The Contractor shall coordinate his work with others to avoid undue interference, and shall conduct his operations, other than required access, within the limits of the assigned construction area or construction right-of-way limits. Specifications and drawings showing work under other contracts are available for examination at the Corps of Engineers District Office, 106 South 15th Street, Omaha, Nebraska 68102-1618, or at the Office of the Area Engineer , . See drawing sheet CS-1 for project sequencing. Also see paragraph 1.2 Utility Relocations by the City of Sioux City, in Section 00800.

1.11 ORDER OF WORK

The sequence of operations shall be maintained so that the maximum amount of work may be done under favorable working conditions in accordance with the completion time set forth in SECTION: SPECIAL CONTRACT REQUIREMENTS, paragraph: Commencement, Prosecution, and Completion of Work. The Contractor shall submit for approval, within 15 days after receipt of notice to proceed a narrative description of his proposed method of operation. See Drawing CS-1 for project sequencing.

1.12 SUBMITTALS

Government approval is required for submittals with a "G" designation; submittals not having a "G" designation are for information only. When used, a designation following the "G" designation identifies the office that will review the submittal for the Government. The following shall be submitted in accordance with Section 01330 SUBMITTAL PROCEDURES:

SD-01 Preconstruction Submittals

Proposed Methods of Operation; G-A

Progress Charts; G-A

Construction Right-of-Way

Right-of-Way Agreements

State and Federal Highways

Agreements for hauling on highways

State and Local Public Roads

Agreements for hauling on roads

SD-02 Shop Drawings

Care of Water; G-A

Traffic Control; G-A

SD-11 Closeout Submitttals

Warranty of Construction

List of warranties with copy of each

1.13 SPECIAL INSTRUCTIONS FOR PROGRESS CHARTS

To be submitted in accordance with the CONTRACT CLAUSES clause entitled "Schedule for Construction Contracts" shall indicate the required data for each of the principal features of the work. Contract changes or modifications will not include extensions of time unless the updated progress chart shows that the contract completion date is delayed due to the affect of the change on one or more principal features of the work.

1.14 PROJECT SIGN

The Contractor shall provide a new project sign constructed in accordance with Standard Drawings Nos. OD15-9A12 and OD15-9A24 bound herein. The sign shall be erected at the project site by the Contractor at the location determined by the Contracting Officer. The project sign shall remain the property of the Contractor and upon completion of the contract, work shall be removed from the premises by the Contractor. . No separate payment will be made for the sign.

1.15 AGGREGATE OR GRANULAR MATERIALS

Material may be produced from locations within the Government project boundaries as approved by the Contracting Officer. The Government will make no guarantee of the physical conditions or the quantity of the available materials or the extent of processing required. Approved areas within the Government boundaries will be restored by the Contractor by replacing the overburden and reshaping the areas to the satisfaction of the Contracting Officer. All areas disturbed by the above operation will be reseeded by the Contractor with native grass seed. The Contractor shall reimburse the Government for such materials at a royalty price of $0.07 per ton. Aggregate or granular materials approved for construction operations will be measured for payment in the presence of a Government inspector, by weighing on approved scales provided by and at the expense of the Contractor. Weight certificates furnished by a public weighmaster will be acceptable in lieu of such procedure when authorized by the Contracting Officer. Unprocessed gravel surfacing material obtained within the Government project boundaries will be "free-issue."

1.16 WARRANTY OF CONSTRUCTION (MAR 1994)

(a) In addition to any other warranties in this contract, the Contractor warrants, except as provided in paragraph (i) of this clause, that work performed under this contract conforms to the contract requirements and is free of any defect in equipment, material, or design furnished, or workmanship performed by the Contractor or any subcontractor or supplier at any tier.

(b) This warranty shall continue for a period of 1 year from the date of final acceptance of the work. If the Government takes possession of any part of the work before final acceptance, this warranty shall continue for a period of 1 year from the date the Government takes possession.

(c) The Contractor shall remedy at the Contractor's expense any failure to conform, or any defect. In addition, the Contractor shall remedy at the Contractor's expense any damage to Government-owned or controlled real or personal property, when that damage is the result of--

(1) The Contractor's failure to conform to contract requirements; or

(2) Any defect of equipment, material, workmanship, or design furnished.

(d) The Contractor shall restore any work damaged in fulfilling the terms and conditions of this clause. The Contractor's warranty with respect to work repaired or replaced will run for 1 year from the date of repair or replacement.

(e) The Contracting Officer shall notify the Contractor, in writing, within a reasonable time after the discovery of any failure, defect, or damage.

(f) If the Contractor fails to remedy any failure, defect, or damage within a reasonable time after receipt of notice, the Government shall have the right to replace, repair, or otherwise remedy the failure, defect, or damage at the Contractor's expense.

(g) With respect to all warranties, express or implied, from subcontractors, manufacturers, or suppliers for work performed and materials furnished under this contract, the Contractor shall--

(1) Obtain all warranties that would be given in normal commercial practice;

(2) Require all warranties to be executed, in writing, for the benefit of the Government, if directed by the Contracting Officer; and

(3) Enforce all warranties for the benefit of the Government, if directed by the Contracting Officer.

(h) In the event the Contractor's warranty under paragraph (b) of this clause has expired, the Government may bring suit at its expense to enforce a subcontractor's, manufacturer's, or supplier's warranty.

(i) Unless a defect is caused by the negligence of the Contractor or subcontractor or supplier at any tier, the Contractor shall not be liable for the repair of any defects of material or design furnished by the Government nor for the repair of any damage that results from any defect in Government-furnished material or design.

(j) This warranty shall not limit the Government's rights under the Inspection and Acceptance clause of this contract with respect to latent defects, gross mistakes, or fraud. (FAR 52.246-21)

1.17 ACCOMMODATIONS FOR GOVERNMENT PERSONNEL

The Contractor shall furnish and maintain an office type trailer for the use of Government inspectors. The trailer shall have a minimum floor space of 300 sq. ft. The trailer shall meet the following requirements: Sufficient blocks to steady the trailer when spotted for use. An entrance near each end with each entrance equipped with a door with fixed window and screen door. Approximately 40 sq. ft. ventilating type of window space with all windows having louvered screens or screens and awnings or venetian blinds. Floors, ceiling and walls to be insulated. Ceiling vents with at least one having an exhaust fan. Varnished plywood interior. Inlaid linoleum covered floors. Ceiling light operated from switch at door. Fluorescent 2-40 watt tube fixtures at each end of trailer. Double electric outlets located near ends of trailer with one exterior weatherproof outlet. Electric 5-gal. water cooler with two plastic bottles. Forced-air central oil or gas heating unit with minimum capacity of 15,000 B.t.u. per hour, thermostatic controlled. Thermostatically controlled 12,000 B.t.u. air conditioning unit. Wardrobe of approximately 48 inch length. Kneehole desk 30" x 32" x 5'0", with 3 drawers on each side of the kneehole; drafting stool, swivel chair with arms, 4 straight-back or folding chairs. Drafting table on shelf with built-in cabinets below. Plan rack capable of holding approximately 75 standard drawings. Five lb. CO2 fire extinguishers. Exterior toilet facilities. The trailer shall be located at the direction of the contracting Officer. The Contractor shall provide accommodations, janitor service, fuel for light plant and heating facilities, electricity, telephone, answering machine, and water, all at no cost to the Government, except that the Contractor will not be liable for Government long-distance calls. Upon completion of the contract, the trailer shall remain the property of the Contractor and shall be removed from the site of the work.

1.18 PORTABLE TOILETS

Toilet facilities will not be available for Contractor's use. The Contractor shall provide and maintain portable toilets for use by the Contractor's staff. Toilet(s) shall be placed at the location directed by the Contracting Officer. To prevent overturning by high winds, all portable toilets shall be anchored down.

PART 2 NOT USED

PART 3 NOT USED

-- End of Section --

A B C D E F G H I
J K L M N O P Q R
S T U V W X Y Z
a b c d e f g h i j k l m
n o p q r s t u v w x y z
1 2 3 4 5 6 7 8 9 10

A B C D E F G H I J K L M
N O P Q R S T U V W X Y Z
a b c d e f g h i j k l m
n o p q r s t u v w x y z
1 2 3 4 5 6 7 8 9 10

Note: Above lettering styles are Helios Extra Bold Condensed and Helios Bold II. Helvetica Black Roman and Helvetica Bold Roman are acceptable substitutes.

STANDARD
ALPHABET & NUMERALS

OFFICE OF THE DISTRICT ENGINEER
OMAHA, NEBRASKA
REV. NOVEMBER, 1982

00800AT1

OD15-9A12

NOTES:

1. Posts to be S4S.
2. Plywood shall be exterior type, A-C grade.
3. Before painting, surface to be clean, dry, free from grease and sanded.
4. Paint with one prime coat zinc oxide and two finish coats grey, Pantone "402" or #26357 in Fed. Std. 595, semi-gloss, enamel, conforming to Fed. Specs. TT-P-102.
5. All lettering to be white enamel on grey background.
6. Decalcomania for Corps of Engineers insignia will be furnished by the Contracting Officer for installation by the Contractor.

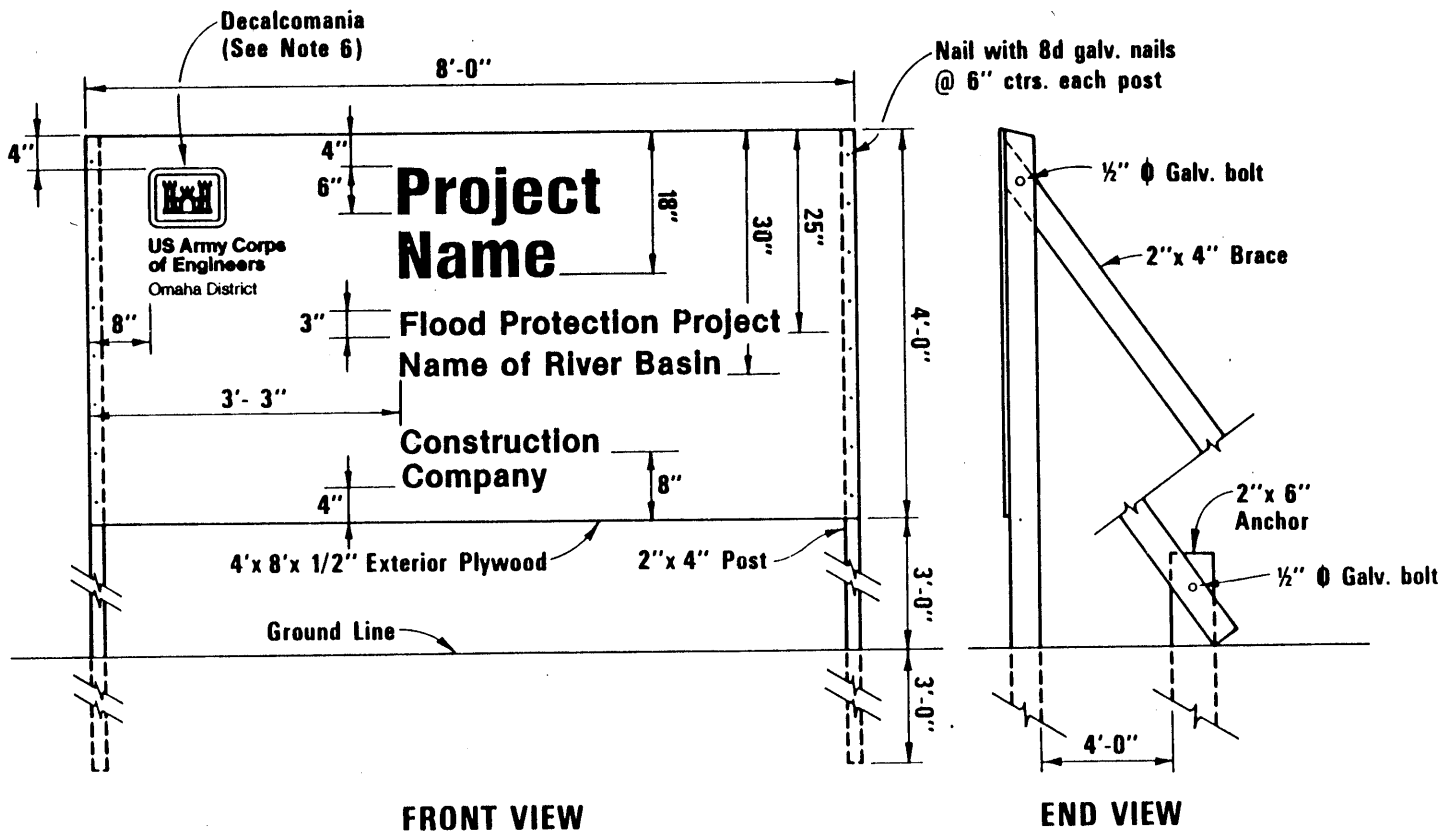

STANDARD
PROJECT SIGN
FLOOD PROTECTION

OFFICE OF THE DISTRICT ENGINEER
OMAHA, NEBRASKA
REV. NOVEMBER, 1982

OD15-9A24

SECTION TABLE OF CONTENTS

DIVISION 01 - GENERAL REQUIREMENTS

SECTION 01330

SUBMITTAL PROCEDURES

09/97 Omaha Update 02/01

PART 1 GENERAL

1.1 CONTRACTOR RESPONSIBILITIES
1.2 SUBMITTAL IDENTIFICATION
1.3 SUBMITTAL CLASSIFICATION
1.3.1 Government Approved
1.3.2 Information Only (FIO)
1.4 APPROVED SUBMITTALS
1.5 DISAPPROVED SUBMITTALS
1.6 WITHHOLDING OF PAYMENT

PART 2 PRODUCTS (Not Applicable)

PART 3 EXECUTION

3.1 GENERAL
3.2 SUBMITTAL REGISTER AND ENG FORM 4288 (RMS) SUBMITTAL REGISTER
3.3 SCHEDULING
3.4 TRANSMITTAL FORM (ENG FORM 4025)
3.5 SUBMITTAL PROCEDURE
3.5.1 Procedures
3.5.1.1 "G-A1" Submittals
3.5.1.2 "G-A" and FIO Submittals
3.5.1.3 Certificates of Compliance
3.5.1.4 Purchase Orders
3.5.1.5 Operation and Maintenance Instructions and/or Manuals
3.5.2 Deviations
3.6 CONTROL OF SUBMITTALS
3.7 GOVERNMENT APPROVED SUBMITTALS
3.7.1 "G-A1" Submittals
3.7.2 "G-A" Submittals
3.8 INFORMATION ONLY SUBMITTALS
3.9 STAMPS

-- End of Section Table of Contents --

SECTION 01330

SUBMITTAL PROCEDURES
09/97
Omaha Update 02/01

PART 1 GENERAL

Attachments: Submittal Register
ENG Form 4025, Transmittal Form

1.1 CONTRACTOR RESPONSIBILITIES

The Contractor is responsible for total management of his work including scheduling, control, and certification of all submittals. The submittal management system provided in these specifications is intended to be a complete system for the Contractor to use to control the quality of materials, equipment and workmanship provided by manufacturers, fabricators, suppliers and subcontractors. The Contractor shall review each submittal for contract compliance. Submittals that comply will be forwarded to the Government. Submittals that do not conform will be returned to the originator to be corrected. The Submittal Register (ENG Form 4288) will be utilized to log and monitor all submittal activities. No construction or installation activities shall be performed prior to required approvals of applicable submittals. The Contractor shall perform a check to assure that all materials and/or equipment have been tested, submitted and approved during the preparatory phase of quality control inspections.

1.2 SUBMITTAL IDENTIFICATION

Submittals required are identified by SD numbers as follows:

SD-01 Preconstruction Submittals

Tabular lists showing location, features, or other pertinent information regarding products, materials, equipment, or components to be used in the work.

In addition, the following items are included:

Construction Progress Schedule
Health and safety plan
Work plan
Quality control plan
Environmental protection plan
Permits

SD-02 Shop Drawings

Submittals which graphically show relationship of various components of the work, schematic diagrams of systems, details of fabrication, layouts of particular elements, connections, and other relational aspects of the work.

SD-03 Product Data

Catalog cuts, illustrations, schedules, diagrams, performance charts, instructions and brochures illustrating size, physical appearance and other characteristics of materials or equipment for some portion of the work.

Samples of warranty language when the contract requires extended product warranties.

SD-04 Samples

Samples, including both fabricated and unfabricated physical examples of materials, products, and units of work as complete units or as portions of units of work.

Physical examples of materials, equipment or workmanship that illustrate functional and aesthetic characteristics of a material or product and establish standards by which the work can be judged. Color samples from the manufacturer's standard line (or custom color samples if specified) to be used in selecting or approving colors for the project.

Field samples and mock-ups constructed on the project site establish standards by which the ensuring work can be judged. Includes assemblies or portions of assemblies which are to be incorporated into the project and those which will be removed at conclusion of the work.

SD-05 Design Data

Calculations, mix designs, analyses or other data pertaining to a part of work.

SD-06 Test Reports

Report signed by authorized official of testing laboratory that a material, product or system identical to the material, product or system to be provided has been tested in accord with specified requirements. (Testing must have been within three years of date of contract award for the project.)

Report which includes findings of a test required to be performed by the contractor on an actual portion of the work or prototype prepared for the project before shipment to job site.

Report which includes finding of a test made at the job site or on sample taken from the job site, on portion of work during or after installation.

Investigation reports

Daily checklists

Final acceptance test and operational test procedure

SD-07 Certificates

A document, required of the Contractor, or through the Contractor, from a supplier, installer, manufacturer, or other lower tier Contractor, the purpose of which is to confirm the quality or orderly progression of a portion of the work by documenting procedures, acceptability of methods or personnel, qualifications, or other verifications of quality.

Statement signed by an official authorized to certify on behalf of the manufacturer of a product, system or material, attesting that the product, system or material meets specified requirements. The statement must be dated after the award of the contract, must state the Contractor's name and address, must name the project and location, and must list the specific requirements which are being certified.

Confined space entry permits.

SD-08 Manufacturer's Instructions

Preprinted material describing installation of a product, system or material, including special notices and material safety data sheets, if any, concerning impedances, hazards, and safety precautions.

SD-09 Manufacturer's Field Reports

Documentation of the testing and verification actions taken by manufacturer's representative to confirm compliance with manufacturer's standards or instructions.

Factory test reports.

SD-10 Operation and Maintenance Data

Data intended to be incorporated in operations and maintenance manuals.

SD-11 Closeout Submittals

Documentation to record compliance with technical or administrative requirements or to establish an administrative mechanism.

In addition, the following items are included:

As-built drawings

Special warranties

Posted operating instructions

Training plan

1.3 SUBMITTAL CLASSIFICATION

Submittals are classified as follows:

1.3.1 Government Approved

Governmental approval is required for extensions of design, critical materials, deviations, equipment whose compatibility with the entire system must be checked, and other items as designated by the Contracting Officer. Within the terms of the Contract Clause entitled "Specifications and Drawings for Construction," they are considered to be "shop drawings." All submittals noted in the technical specifications and Submittal Register as "G-A" ("G,A") or "G-A1" ("G,A1") are subject to Government Approval.

1.3.2 Information Only (FIO)

All submittals not requiring Government approval will be for information only. They are not considered to be "shop drawings" within the terms of the Contract Clause referred to above. The Contracting Officer has the option to review any submittal.

1.4 APPROVED SUBMITTALS

The Contracting Officer's approval of submittals shall not be construed as a complete check, but will indicate only that the general method of construction, materials, detailing and other information are satisfactory. Approval will not relieve the Contractor of the responsibility for any error which may exist, as the Contractor under the Contractor Quality Control (CQC) requirements of this contract is responsible for dimensions, the design of adequate connections and details, and the satisfactory construction of all work. After submittals have been approved by the Contracting Officer, no resubmittal for the purpose of substituting materials or equipment will be considered unless accompanied by an explanation of why a substitution is necessary.

1.5 DISAPPROVED SUBMITTALS

The Contractor shall make all corrections required by the Contracting Officer and promptly furnish a corrected submittal in the form and number of copies specified for the initial submittal. If the Contractor considers any correction indicated on the submittals to constitute a change to the contract, a notice in accordance with the Contract Clause "Changes" shall be given promptly to the Contracting Officer.

1.6 WITHHOLDING OF PAYMENT

Payment for materials incorporated in the work will not be made if required approvals have not been obtained.

PART 2 PRODUCTS (Not Applicable)

PART 3 EXECUTION

3.1 GENERAL

The Contractor shall make submittals as required by the specifications. The Contracting Officer may request submittals in addition to those specified when deemed necessary to adequately describe the work covered in the respective sections. Units of weights and measures used on all submittals shall be the same as those used in the contract drawings. Each submittal shall be complete and in sufficient detail to allow ready determination of compliance with contract requirements. Prior to submittal, all items shall be checked and approved by the Contractor's Quality Control (CQC) System Manager and each item shall be stamped, signed, and dated by the CQC System Manager indicating action taken. Proposed deviations from the contract requirements shall be clearly identified. Submittals shall include items such as: Contractor's, manufacturer's, or fabricator's drawings; descriptive literature including (but not limited to) catalog cuts, diagrams, operating charts or curves; test reports; test cylinders; samples; O&M manuals (including parts list); certifications; warranties; and other such required submittals. Submittals requiring Government approval shall be scheduled and made prior to the acquisition of the material or equipment covered thereby. Samples remaining upon completion of the work shall be picked up and disposed of in accordance with manufacturer's Material Safety Data Sheets (MSDS) and in

compliance with existing laws and regulations.

3.2 SUBMITTAL REGISTER AND ENG FORM 4288 (RMS) SUBMITTAL REGISTER

At the end of this section is a submittal register (submittal form) showing items of equipment and materials for which submittals are required by the specifications; this list may not be all inclusive and additional submittals may be required. The attached submittal register identifies only the submittal section, type of submittal, description of item submitted, paragraph number related to submittal item (section submittal paragraph if none listed), submittal classification (G or FIO), and submittal reviewer identifier (A or A1). The submittal register generated by the Government Resident Management System (RMS) Software is used for tracking construction submittals and is referred to as ENG Form 4288 (RMS). The Contractor shall maintain an ENG Form 4288 (RMS) for the project in accordance with the attached ENG Form 4288 (RMS) Instructions. The Contractor will be furnished one (1) set of ENG Forms 4288 (RMS) at the preconstruction conference. Much of the same information contained on the atttached submittal register will be included on the ENG Forms 4288 (RMS) furnished to the Contractor. The Contractor shall complete the appropriate columns as indicated on the attached ENG Form 4288 (RMS) Instructions and return six (6) completed copies to the Contracting Officer for approval within 20 calendar days after the preconstruction conference. The ENG Form 4288 (RMS)will become a part of the contract after approval. Six (6) additional copies of a revised ENG Form 4288(RMS) with ACTIVITY NO. filled in shall be submitted with the completed network analysis system when a network analysis system is a contract requirement. The TRANSMITTAL NUMBER AND ITEM NUMBER shall be left blank for use later to record the respective transmittal and item number corresponding to those listed on the transmittal form entitled: "TRANSMITTAL OF SHOP DRAWINGS, EQUIPMENT DATA, MATERIAL SAMPLES, OR MANUFACTURER'S CERTIFICATES OF COMPLIANCE" (ENG Form 4025). The approved ENG Form 4288 (RMS) will become the scheduling document and will be used to control submittals throughout the life of the contract. The ENG Form 4288 (RMS) and the progress schedules shall be coordinated.

3.3 SCHEDULING

Submittals covering component items forming a system or items that are interrelated shall be scheduled to be coordinated and submitted concurrently. Certifications to be submitted with the pertinent drawings shall be so scheduled. Adequate time (a minimum of 20 calendar days exclusive of mailing time) shall be allowed and shown on the register for review and approval. No delay damages or time extensions will be allowed for time lost in late submittals. .

3.4 TRANSMITTAL FORM (ENG FORM 4025)

The sample transmittal form (ENG Form 4025) attached to this section shall be used for submitting both Goverment approved and information only submittals in accordance with the instructions on the reverse side of the form. These forms will be furnished to the Contractor. This form shall be properly completed by filling out all the heading blank spaces and identifying each item submitted. Special care shall be exercised to ensure proper listing of the specification paragraph and/or sheet number of the contract drawings pertinent to the data submitted for each item.

3.5 SUBMITTAL PROCEDURE

Submittals shall be made as follows:

3.5.1 Procedures

3.5.1.1 "G-A1" Submittals

All items listed as "G-A1" submittals in the various sections or on the Submittal Register shall be mailed directly to the addressee shown below as directed. For each submittal, a completed information copy of the attached transmittal form shall also be mailed to the Area Engineer .

Technical Reviewer

Engineering Division
Attn: CENWO-ED-DI
U.S. Army Engineer District, Omaha
106 South 15th Street
Omaha, NE 68102-1618

Each required submittal which is in the form of a drawing shall be submitted as seven (7) prints of the drawing. Drawing prints shall be either blue or black line permanent-type prints on a white background or blueprint and shall be sufficiently clear and suitable for making legible copies.

All catalog and descriptive data shall be submitted in seven (7) copies. Catalog cuts and other descriptive data which have more than one model, size, or type or which shows optional equipment shall be clearly marked to show the model, size, or type and all optional equipment which is proposed for approval. Submittals on component items forming a system or that are interrelated shall be submitted at one time as a single submittal in order to demonstrate that the items have been properly coordinated and will function as a unit.

3.5.1.2 "G-A" and FIO Submittals

Except as noted below, data for all items listed as "G-A" or FIO Submittals in the various sections shall be submitted in five (5) copies to the Area Engineer using the transmittal form. Items not to be submitted in multiples, such as samples and test cylinders, shall be submitted to the Area or Resident Engineer (as directed) accompanied by five (5) copies of the transmittal form.

3.5.1.3 Certificates of Compliance

Each certificate shall be signed by an official authorized to certify in behalf of the manufacturing company and shall contain the name and address of the Contractor, the project name and location, and the quantity and date or dates of shipment or delivery to which the certificates apply. Copies of laboratory test reports submitted with certificates shall contain the name and address of the testing laboratory and the date or dates of the tests to which the report applies. Certification shall not be construed as relieving the Contractor from furnishing satisfactory material, if, after tests are performed on selected samples, the material is found not to meet the specific requirements.

3.5.1.4 Purchase Orders

Copies of purchase orders shall be furnished to the Contracting Officer when the Contractor requests assistance for expediting deliveries of equipment or materials, or when requested by the Contracting Officer for the purpose of quality assurance review. Each purchase order issued by the Contractor or his subcontractors for materials and equipment to be incorporated into the project shall (1) be clearly identified with the applicable DA contract number, (2) carry an identifying number, (3) be in sufficient detail to identify the material being purchased, (4) indicate a definite delivery date, and (5) display the DMS priority rating, if applicable.

3.5.1.5 Operation and Maintenance Instructions and/or Manuals

Where required by various technical sections, operations and maintenance instructions and/or manuals with parts lists included shall be provided by the Contractor in quintuplicate, unless otherwise specified, and shall be assembled in three-ring binders with index and tabbed section divider and having a cover indicating the contents by equipment or system name and project title and shall be submitted for approval to the Contracting Officer 90 days prior to final tests of mechanical and electrical systems, unless otherwise specified. Each operation and maintenance manual shall contain a copy of all warranties and a list of local service representatives required by Section 01200 Warranty of Construction. If field testing requires these copies to be revised, they shall be updated and resubmitted for approval within 10 calendar days after completion of tests. The Operations and Maintenance Instructions and/or Manuals shall be shown as a separate activity on the Contractor prepared construction schedule bar chart or network analysis system.

3.5.2 Deviations

For submittals which include proposed deviations requested by the Contractor, the column "variation" of ENG Form 4025 shall be checked. The Contractor shall set forth in writing the reason for any deviations and annotate such deviations on the submittal. The Government reserves the right to rescind inadvertent approval of submittals containing unnoted deviations.

3.6 CONTROL OF SUBMITTALS

The Contractor shall carefully control his procurement operations to ensure that each individual submittal is made on or before the Contractor scheduled submittal date shown on the approved "Submittal Register."

3.7 GOVERNMENT APPROVED SUBMITTALS

Upon completion of review of submittals requiring Government approval, the submittals will be identified as having received approval by being so stamped and dated.

3.7.1 "G-A1" Submittals

The drawing print and five (5) sets of all catalog data and descriptive literature and drawing prints will be retained by the Contracting Officer and two (2) sets of catalog data and descriptive literature and drawing prints will be returned to the Contractor.

3.7.2 "G-A" Submittals

Two (2) copies of "G-A" submittals for approval will be returned to the Contractor except for samples, test cylinders, and O&M manuals for which two (2) copies of the transmittal form only will be returned to the Contractor.

3.8 INFORMATION ONLY SUBMITTALS

Normally submittals for information only will not be returned. Approval of the Contracting Officer is not required on information only submittals. The Government reserves the right to require the Contractor to resubmit any item found not to comply with the contract. This does not relieve the Contractor from the obligation to furnish material conforming to the plans and specifications; will not prevent the Contracting Officer from requiring removal and replacement of nonconforming material incorporated in the work; and does not relieve the Contractor of the requirement to furnish samples for testing by the Government laboratory or for check testing by the Government in those instances where the technical specifications so prescribe.

3.9 STAMPS

Stamps used by the Contractor on the submittal data to certify that the submittal meets contract requirements shall be similar to the following:

CONTRACTOR

(Firm Name)

_____ Approved

_____ Approved with corrections as noted on submittal data and/or attached sheets(s).

SIGNATURE: _____

TITLE: _____

DATE: _____

INSTRUCTIONS
ENG FORM 4288 (RMS)

1. The Contractor shall utilize the ENG Form 4288 (RMS) generated by the Government Residential Management System (RMS)software for tracking construction submittals. The Submittal Register information, [columns (c) thru (f) from the Submittal Forms furnished with this solicitation,] [will be utilized by the Government] to generate the ENG Form 4288 (RMS). [The Government will furnish the Contractor a hard copy of the ENG Form 4288 (RMS) at the preconstruction conference.] The ENG Form 4288 (RMS) includes the following items and parties responsible for completing the information required on the ENG Form 4288 (RMS):

a. Activity Number: will be provided by the Contractor from his Network Analysis, if required, and when a network analysis is accepted.

b. Transmittal Number and Item Number: will be provided by the Contractor from ENG Form 4025 for each item.

c. Specification Paragraph Number: will be provided by the Government from the Submittal Register from column entitled "Specification Paragraph Number".

d. Description of Submittal: will be provided by the Government from the Submittal Register from column entitled "Description of Item Submitted".

e. Type of Submittal: will be provided by the Government from the Submittal Register from column entitled "Type of Submittal" or "Description of Item Submitted".

f. Classification: will be provided by the Government from the Submittal Register from column entitled "Classification".

g. Reviewing Office - Reviewer: will be provided by the Government from the Submittal Register from column entitled "Classification" or "Reviewer".

h. Contractor Schedule Dates: the Contractor will provide schedule dates for

"Submit Needed By" (Date the Contractor expects to submit an item. It is the Contractors responsibility to calculate the lead time needed for the government approval. Note if resubmittal is required it is the Contractors responsibility to make all adjustments necessary to meet the contract completion date.)

"Approval Needed By" (date the Contractor can receive approval and still obtain the material by need date.), and

"Material Needed By" (date that the material is needed at the site. If there is a network analysis it should reflect that date on the analysis.)

i. Contractor Action: Includes the following items: "Code" and "Submit to the Corps". These items will be completed by the Contractor. The action codes will be one of the following:

A - Approved as submitted.
B - Approved, except as noted.

C - Approved, except as noted. Refer to attached sheet resubmission required.
G - Other (specify)

j. Government Action: This item includes a Government Action "Code" and "Date" and is reserved for Government use. The Government reserves the right to review any submittal for contract compliance. Receipt of an Action Code "F - Receipt Acknowledged" or failure of the Contractor to receive an Action Code by the Government, does not mean that the submittal is in compliance with the contract requirements. When used by the Government, the action code will be one of the following:

A - Approved as submitted.
B - Approved except as noted on drawings.
C - Approved, except as noted on drawings. Refer to attached ____ sheet resubmission required.
D - Will be returned by separate correspondence.
E - Disapproved (See Attached).
F - Receipt Acknowledged.
Fx - Receipt acknowledged, does not comply as noted with contract requirements.
G - Other (specify).

2. Reviewer Abbreviation code will be as follows;

G-A or G-A1 - Government Approved
FIO - For Information Only

INSTRUCTIONS
ENG FORM 4025

1. DATE at the top of form will be the date submitted to the Government which is to be completed by the Contractor.

2. TRANSMITTAL NO. Each new transmittal (i.e. G-A1, G-A or FIO) shall be numbered consecutively in the space provided in "Transmittal No.". This number will be the identifying symbol for each submittal. Example: "G-A1 -001", "G-A-002", "FIO-003", etc. For each new submittal or for a resubmittal, the appropriate box must be marked. Resubmittals must be designated by their original sequential number followed by an ".1", ".2", etc. for each sequential resubmittal. Example: "G-A1-001.1" (previous submittal No. G-A1-001).

3. TO: Box will contain the name and address of the office which will review the submittal. The name and address should be given in paragraph 3.5. Contractor is to complete this box after reviewing the classification provided by the government on Eng Form 4288 column f and determining the proper address.

4. FROM: Box will be the name and address of the Contractor. Contractor is to complete this box.

5. CONTRACT NO. box will contain the Contractors construction contract number (e.g., DACXXX-XX-C-XXXX).

6. CHECK ONE box will be completed by the Contractor with one box marked. If a resubmittal is provided last transmittal number will be added.

7. SPECIFICATION SECTION NO. box will be completed by the Contractor. The number will be the five digit number found in the specifications. No more than one section will be covered with each transmittal.

8. PROJECT TITLE AND LOCATION box will be completed by the Contractor.

9. Column a, will be completed by the Contractor and will contain a different number for each item submitted in that transmittal. Once a number is assigned to an item it will remain the same even if there is a resubmittal.

10. Column b, will be completed by the Contractor. The description of each item on this form will include the descriptions provided on the submittal register plus any other data necessary to describe the item. The Contractor shall submit each submittal register item all at once on one transmittal if possible. If a submittal register item can not be submitted all at once Contractor should note that in the remarks box. If a submittal register item requires several items, description shall contain submittal register description plus any additional specific descriptions. Additional items not on the submittal register will be noted in the remarks box.

11. Column c, will be completed by the Contractor. The information will be the appropriate submittal description number as described this Section or shown on the submittal register (e.g. SD-XX).

12. Column d, will be completed by the Contractor. The number of copies will be determined by the Contractor after review of submittal register for the classification of the item and after review of paragraph 3.5 of this

Section.

13. Column e, will be completed by the Contractor. The Contractor shall state all applicable paragraph numbers.

14. Column f, will be completed by the Contractor. The Contractor shall state all applicable drawing sheet numbers.

15. Column g, will be completed by the Contractor. The action codes will be one of the following:

A - Approved as submitted.
B - Approved, except as noted.
C - Approved, except as noted. Refer to attached sheet resubmission required.
G - Other (specify)

16. Column h, will be completely by the Contractor. A check shall be placed in this column when a submittal is not in accordance with the plans and specifications also, a written statement to that effect shall be included in the space provided for "Remarks".

17. Column i, is reserved for Government use and may or may not be provided. When used by the Government, the action code will be one of the following:

A - Approved as submitted.
B - Approved except as noted on drawings.
C - Approved, except as noted on drawings. Refer to attached ____ sheet resubmission required.
D - Will be returned by separate correspondence.
E - Disapproved (See Attached).
F - Receipt Acknowledged.
Fx - Receipt acknowledged, does not comply as noted with contract requirements.
G - Other (specify).

18. REMARKS box self explained.

19. Contractor must sign all Eng Form 4025 certifying conformance.

20. Section II will be completed by the Government. Contractor is not to write in this space.

See reverse side of ENG Form 4025 for additional instructions.

-- End of Section --

SUBMITTAL REGISTER

CONTRACT NO.

TITLE AND LOCATION
Perry Creek, Phase 4, Sioux City, IA

CONTRACTOR

ACTIVITY NO	TRANSMITTAL NO	SPEC SECT	DESCRIPTION ITEM SUBMITTED	PARAGRAPH #	CLASSIFICATION	GOVT OR A/E REVWR	CONTRACTOR: SCHEDULE DATES			CONTRACTOR ACTION			APPROVING AUTHORITY					
							SUBMIT	APPROVAL NEEDED BY	MATERIAL NEEDED BY	ACTION CODE	DATE OF ACTION	DATE FWD TO APPR AUTH/ DATE RCD FROM CONTR	DATE FWD TO OTHER REVIEWER	DATE RCD FROM OTH REVIEWER	ACTION CODE	DATE OF ACTION	MAILED TO CONTR/ DATE RCD FRM APPR AUTH	REMARKS
(a)	(b)	(c)	(d)	(e)	(f)		(g)	(h)	(i)	(j)	(k)	(l)	(m)	(n)	(o)	(p)	(q)	(r)
		01200	SD-01 Preconstruction Submittals															
			Proposed Methods of Operation		G	A												
			Progress Charts	1.13	G	A												
			Construction Right-of-Way															
			State and Federal Highways	1.8.4														
			State and Local Public Roads	1.8.5														
			SD-02 Shop Drawings															
			Care of Water	1.4	G	A												
			Traffic Control	1.8.1	G	A												
			SD-11 Closeout Submittals															
			Warranty of Construction															
		01351	SD-03 Product Data															
			Exposure Monitoring/Air Sampling	1.13	G													
			Program															
			Site Control Log	1.29.2	G													
			HAZWOPER Qualifications		G													
			Certificates															
		01355	SD-01 Preconstruction Submittals															
			Environmental Protection Plan	1.7	G	RE												
		01356	SD-01 Preconstruction Submittals															
			Contractor's Storm Water		G	RE												
			Pollution Preventation Plan															
			(SWPPP)															
			SD-07 Certificates															
			Mill Certificate or Affidavit	2.1.3														
		01400	SD-01 Preconstruction Submittals															

SUBMITTAL REGISTER

CONTRACT NO.

TITLE AND LOCATION
Perry Creek, Phase 4, Sioux City, IA

CONTRACTOR

ACTIVITY NO (a)	TRANSMITTAL NO (b)	SPEC SECT (c)	DESCRIPTION ITEM SUBMITTED (d)	PARAGRAPH # (e)	CLASSIFICATION (f)	GOVT OR A/E REVWR	CONTRACTOR: SCHEDULE DATES SUBMIT (g)	APPROVAL NEEDED BY (h)	MATERIAL NEEDED BY (i)	CONTRACTOR ACTION CODE (j)	DATE OF ACTION (k)	DATE FWD TO APPR AUTH/ DATE RCD FROM CONTR (l)	APPROVING AUTHORITY DATE FWD TO OTHER REVIEWER (m)	DATE RCD FROM OTH REVIEWER (n)	ACTION CODE (o)	DATE OF ACTION (p)	MAILED TO CONTR/ DATE RCD FRM APPR AUTH (q)	REMARKS (r)
		01400	Accident Prevention Plan		G	A												
			Respiratory Protection Program		G	A												
			SD-06 Test Reports															
			Exposure Assessment and Air		G	A												
			Monitoring															
			SD-07 Certificates															
			Qualifications		G	A												
			Training Program															
			FIO															
			Medical Requirements															
		01450	SD-03 Product Data															
			Sampling and Analysis Plan	3.3														
			GA															
			SD-06 Test Reports															
			Chemical Data Final Report	3.7														
			GA															
		02011	SD-01 Preconstruction Submittals															
			Location, Type, and Installation		G	RE												
			Methods of Object Points															
			Reference Point and/or		G	RE												
			Benchmark Locations															
			Photographic and Video Tape		G	RE												
			Documentation															
			SD-05 Design Data															
			Survey Readings		G	RE												
		02115A	SD-03 Product Data															

SUBMITTAL REGISTER

CONTRACT NO.

TITLE AND LOCATION
Perry Creek, Phase 4, Sioux City, IA

CONTRACTOR

ACTIVITY NO	TRANSMITTAL NO	SPEC SECT	DESCRIPTION ITEM SUBMITTED	PARAGRAPH #	CLASSIFICATION	GOVT OR A/E REVWR	CONTRACTOR: SCHEDULE DATES			CONTRACTOR ACTION			APPROVING AUTHORITY					
							SUBMIT	APPROVAL NEEDED BY	MATERIAL NEEDED BY	ACTION CODE	DATE OF ACTION	DATE FWD TO APPR AUTH/ DATE RCD FROM CONTR	DATE FWD TO OTHER REVIEWER	DATE RCD FROM OTH REVIEWER	ACTION CODE	DATE OF ACTION	MAILED TO CONTR/ DATE RCD FRM APPR AUTH	REMARKS
(a)	(b)	(c)	(d)	(e)	(f)		(g)	(h)	(i)	(j)	(k)	(l)	(m)	(n)	(o)	(p)	(q)	(r)
		02115A	Work Plan	1.7.2	G RE													
			Qualifications	1.5	G RE													
			Salvage Rights	3.12.4														
			FIO															
			Disposal Records															
			SD-06 Test Reports															
			Backfill Material	2.1	G RE													
			Tank Contents Verification	3.2	G RE													
			Contaminated Water Disposal		G RE													
			Soil Examination, Testing, and	3.10	G RE													
			Analysis															
			Groundwater Temporary		G RE													
			Monitoring Well or DPT Point															
			installation and abandonment															
			Groundwater Sampling, Testing		G RE													
			and Analysis															
			Tank Closure Report	3.14														
			FIO															
		02210	SD-01 Preconstruction Submittals															
			Disposal Facility	3.4	G RE													
			SD-06 Test Reports															
			Field Testing Control	3.12														
			In-Place Densities		G RE													
			SD-07 Certificates															
			Optimum Moisture and		G RE													
			Laboratory Maximum Density															

SUBMITTAL REGISTER

CONTRACT NO.

TITLE AND LOCATION
Perry Creek, Phase 4, Sioux City, IA

CONTRACTOR

ACTIVITY NO	TRANSMITTAL NO	SPEC SECT	DESCRIPTION ITEM SUBMITTED	PARAGRAPH #	CLASSIFICATION	GOVT OR A/E REVWR	CONTRACTOR: SCHEDULE DATES			CONTRACTOR ACTION			APPROVING AUTHORITY					
							SUBMIT	APPROVAL NEEDED BY	MATERIAL NEEDED BY	ACTION CODE	DATE OF ACTION	DATE FWD TO APPR AUTH/ DATE RCD FROM CONTR	DATE FWD TO OTHER REVIEWER	DATE RCD FROM OTH REVIEWER	ACTION CODE	DATE OF ACTION	MAILED TO CONTR/ DATE RCD FRM APPR AUTH	REMARKS
(a)	(b)	(c)	(d)	(e)	(f)		(g)	(h)	(i)	(j)	(k)	(l)	(m)	(n)	(o)	(p)	(q)	(r)
		02210	Field Testing Control;	3.12														
		02220	SD-01 Preconstruction Submittals															
			Work Plan		G	RE												
		02230	SD-07 Certificates															
			Materials\Products of Clearing	3.3.1	G	RE												
			and Grubbing															
		02245	SD-06 Test Reports															
			Initial Sampling and Testing		G	RE												
			Field Gradation	3.2.4	G	RE												
			Certified Test Results for Grout		G	RE												
			Materials and Mixture															
			SD-07 Certificates															
			Waybills and Delivery Tickets	1.4	G	RE												
		02310	SD-02 Shop Drawings															
			Precast Concrete Pipe	2.1.9	G	RE												
			Precast Concrete Pipe	3.3.2	G	RE												
			Sluice Gates	3.4	G	RE												
			Flap Gates	3.5	G	RE												
			SD-06 Test Reports															
			Precast Concrete Pipe	2.1.9														
			Precast Concrete Pipe	3.3.2														
			Testing	3.9														
			SD-07 Certificates															
			Materials	2.1														
		02315	SD-06 Test Reports															

SUBMITTAL REGISTER

CONTRACT NO.

TITLE AND LOCATION
Perry Creek, Phase 4, Sioux City, IA

CONTRACTOR

ACTIVITY NO	TRANSMITTAL NO	SPEC SECT	DESCRIPTION ITEM SUBMITTED	PARAGRAPH #	CLASSIFICATION	GOVT OR A/E REVWR	CONTRACTOR: SCHEDULE DATES			CONTRACTOR ACTION			APPROVING AUTHORITY					MAILED TO CONTR/ DATE RCD FRM APPR AUTH	REMARKS
							SUBMIT	APPROVAL NEEDED BY	MATERIAL NEEDED BY	ACTION CODE	DATE OF ACTION	DATE FWD TO APPR AUTH/ DATE RCD FROM CONTR	DATE FWD TO OTHER REVIEWER	DATE RCD FROM OTH REVIEWER	ACTION CODE	DATE OF ACTION			
(a)	(b)	(c)	(d)	(e)	(f)		(g)	(h)	(i)	(j)	(k)	(l)	(m)	(n)	(o)	(p)	(q)	(r)
		02315	Optimum Moisture and	3.13.3	G	RE												
			Laboratory Maximum Density															
			In-Place Densities of Fills and		G	RE												
			Backfills															
			Field Testing Control	3.13	G	RE												
			SD-07 Certificates															
			Disposal Facility	3.9	G	RE												
		02316a	SD-06 Test Reports															
			Field Density Tests	3.4.3	G	RE												
			Testing of Backfill Materials	3.4.2	G	RE												
		02370	SD-03 Product Data															
			Erosion Control Blankets	2.1	G	ED												
			Equipment		G	RE												
			SD-04 Samples															
			Materials		G	ED												
			SD-07 Certificates															
			Turf Reinforcement Mat		G	ED												
			Installer's Qualification	1.5	G	RE												
			SD-10 Operation and Maintenance															
			Data															
			Maintenance Instructions	3.5.1.1	G	RE												
		02430	SD-03 Product Data															
			Tie backs		G	ED												
			Bar Couplers		G	ED												
			Anchorage Plates and Nuts		G	ED												
			Sleeves and Sheathing		G	ED												

SUBMITTAL REGISTER

CONTRACT NO.

TITLE AND LOCATION
Perry Creek, Phase 4, Sioux City, IA

CONTRACTOR

ACTIVITY NO	TRANSMITTAL NO	SPEC SECT	DESCRIPTION ITEM SUBMITTED	PARAGRAPH #	CLASSIFICATION	GOVT OR A/E REVWR	CONTRACTOR: SCHEDULE DATES			CONTRACTOR ACTION			APPROVING AUTHORITY					
							SUBMIT	APPROVAL NEEDED BY	MATERIAL NEEDED BY	ACTION CODE	DATE OF ACTION	DATE FWD TO APPR AUTH/ DATE RCD FROM CONTR	DATE FWD TO OTHER REVIEWER	DATE RCD FROM OTH REVIEWER	ACTION CODE	DATE OF ACTION	MAILED TO CONTR/ DATE RCD FRM APPR AUTH	REMARKS
(a)	(b)	(c)	(d)	(e)	(f)		(g)	(h)	(i)	(j)	(k)	(l)	(m)	(n)	(o)	(p)	(q)	(r)
		02430	Centralizers		G	ED												
			Corrosion Inhibiting Grease															
			Grout Materials and Equipment		G	ED												
			Tensioning Equipment		G	ED												
			SD-05 Design Data															
			Design Calculations	2.1.1	G	ED												
			SD-06 Test Reports															
			Performance Test and Proof Test		G	ED												
			SD-07 Certificates															
			Anchor Bars															
			Bar Couplers															
			Hex Nuts and Bearing Plates															
			Grout Materials	2.2														
		02464a	SD-02 Shop Drawings															
			Metal Sheet Piling	2.1	G	ED												
			SD-03 Product Data															
			Pile Driving Equipment	3.1.1	G	ED												
			Pulling and Redriving	3.1.5	G	ED												
			SD-06 Test Reports															
			Materials Tests	2.2.1														
		02466	SD-02 Shop Drawings															
			Caissons	3.1	G	ED												
			SD-07 Certificates															
			Caissons	3.1														
			Qualifications	1.3														
		02510a	SD-03 Product Data															

SUBMITTAL REGISTER

CONTRACT NO.

TITLE AND LOCATION
Perry Creek, Phase 4, Sioux City, IA

CONTRACTOR

ACTIVITY NO	TRANSMITTAL NO	SPEC SECT	DESCRIPTION ITEM SUBMITTED	PARAGRAPH #	CLASSIFICATION	GOVT OR A/E REVWR	CONTRACTOR: SCHEDULE DATES			CONTRACTOR ACTION			APPROVING AUTHORITY					MAILED TO CONTR/ DATE RCD FRM APPR AUTH	REMARKS
							SUBMIT	APPROVAL NEEDED BY	MATERIAL NEEDED BY	ACTION CODE	DATE OF ACTION	DATE FWD TO APPR AUTH/ DATE RCD FROM CONTR	DATE FWD TO OTHER REVIEWER	DATE RCD FROM OTH REVIEWER	ACTION CODE	DATE OF ACTION		
(a)	(b)	(c)	(d)	(e)	(f)		(g)	(h)	(i)	(j)	(k)	(l)	(m)	(n)	(o)	(p)	(q)	(r)
		02510a	Installation	3.1														
			Waste Water Disposal Method															
			Satisfactory Installation															
			SD-06 Test Reports															
			Bacteriological Disinfection	3.3.1	G RE													
			SD-07 Certificates															
			Manufacturer's Representative	1.3														
			Installation	3.1														
		02530N	SD-02 Shop Drawings															
			Precast concrete manhole	2.3.1.1														
			Metal items	2.3.2														
			Frames, covers, and gratings	2.3.2.1														
			SD-03 Product Data															
			Pipeline materials	2.1														
		02532a	SD-06 Test Reports															
			Hydrostatic Tests	3.2	G AE													
		02563	SD-03 Product Data															
			Plant, Equipment, and Tools	1.9														
			Job Mix Formula		G RE													
			Concrete Mixture Proportioning	2.1.1	G RE													
			Studies															
			SD-06 Test Reports															
			Initial Tests	2.6	G RE													
			Contractor Quality Control	3.2.4	G RE													
			Acceptability of Work	3.2.5	G RE													
			Acceptability of Work	3.4.5	G RE													

SUBMITTAL REGISTER

CONTRACT NO.

TITLE AND LOCATION
Perry Creek, Phase 4, Sioux City, IA

CONTRACTOR

ACTIVITY NO	TRANSMITTAL NO	SPEC SECT	DESCRIPTION ITEM SUBMITTED	PARAGRAPH #	CLASSIFICATION	GOVT OR A/E REVWR	CONTRACTOR: SCHEDULE DATES			CONTRACTOR ACTION			APPROVING AUTHORITY					
							SUBMIT	APPROVAL NEEDED BY	MATERIAL NEEDED BY	ACTION CODE	DATE OF ACTION	DATE FWD TO APPR AUTH/ DATE RCD FROM CONTR	DATE FWD TO OTHER REVIEWER	DATE RCD FROM OTH REVIEWER	ACTION CODE	DATE OF ACTION	MAILED TO CONTR/ DATE RCD FRM APPR AUTH	REMARKS
(a)	(b)	(c)	(d)	(e)	(f)		(g)	(h)	(i)	(j)	(k)	(l)	(m)	(n)	(o)	(p)	(q)	(r)
		02563	SD-08 Manufacturer’s Instructions															
			Manufacturer's Recommendations	3.2.3	G RE													
		02630	SD-03 Product Data															
			Placing Pipe	3.3														
					03													
			SD-07 Certificates															
			Pipeline Testing	3.8														
					07													
			Hydrostatic Test on Watertight	2.5														
			Joints															
			Determination of Density	3.7.5														
			Frame and Cover for Gratings	2.2.5														
		02710	SD-04 Samples															
			Materials		G RE													
			SD-06 Test Reports															
			Sampling and Testing;		G RE													
			SD-07 Certificates															
			Materials		G RE													
		02763a	SD-03 Product Data															
			Equipment	1.4	G RE													
			Composition Requirements															
					03													
			Qualifications															
			SD-06 Test Reports															
			Sampling and Testing	2.2														
					06													

SUBMITTAL REGISTER

CONTRACT NO.

TITLE AND LOCATION
Perry Creek, Phase 4, Sioux City, IA

CONTRACTOR

ACTIVITY NO	TRANSMITTAL NO	SPEC SECT	DESCRIPTION ITEM SUBMITTED	PARAGRAPH #	CLASSIFICATION	GOVT OR A/E REVWR	CONTRACTOR: SCHEDULE DATES			CONTRACTOR ACTION			APPROVING AUTHORITY					MAILED TO CONTR/ DATE RCD FRM APPR AUTH	REMARKS
							SUBMIT	APPROVAL NEEDED BY	MATERIAL NEEDED BY	ACTION CODE	DATE OF ACTION	DATE FWD TO APPR AUTH/ DATE RCD FROM CONTR	DATE FWD TO OTHER REVIEWER	DATE RCD FROM OTH REVIEWER	ACTION CODE	DATE OF ACTION		
(a)	(b)	(c)	(d)	(e)	(f)		(g)	(h)	(i)	(j)	(k)	(l)	(m)	(n)	(o)	(p)	(q)	(r)
		02763a	SD-07 Certificates															
			Volatile Organic Compound															
			(VOC)															
					07													
		02821	SD-07 Certificates															
			Chain Link Fence	2.1.1														
		02832	SD-02 Shop Drawings															
			Shop Drawings	2.1.2	G RE													
			SD-03 Product Data															
			Manufacturer's Data		G RE													
			Qualifications	1.4	G RE													
		02921	SD-01 Preconstruction Submittals															
			Equipment															
			Delivery	1.4.1														
			Finished Grade and Topsoil	3.2.1														
			Topsoil	2.2														
			SD-03 Product Data															
			Equipment															
			Surface Erosion Control Material	2.7														
			Chemical Treatment Material		G RE													
			SD-04 Samples															
			Delivered Topsoil	1.4.1.1														
			Soil Amendments	2.3														
			Mulch	2.4														
			SD-06 Test Reports															
			Equipment Calibration	3.1.3														

SUBMITTAL REGISTER

CONTRACT NO.

TITLE AND LOCATION
Perry Creek, Phase 4, Sioux City, IA

CONTRACTOR

ACTIVITY NO	TRANSMITTAL NO	SPEC SECT	DESCRIPTION ITEM SUBMITTED	PARAGRAPH #	CLASSIFICATION	GOVT OR A/E REVWR	CONTRACTOR: SCHEDULE DATES			CONTRACTOR ACTION			APPROVING AUTHORITY					
							SUBMIT	APPROVAL NEEDED BY	MATERIAL NEEDED BY	ACTION CODE	DATE OF ACTION	DATE FWD TO APPR AUTH/ DATE RCD FROM CONTR	DATE FWD TO OTHER REVIEWER	DATE RCD FROM OTH REVIEWER	ACTION CODE	DATE OF ACTION	MAILED TO CONTR/ DATE RCD FRM APPR AUTH	REMARKS
(a)	(b)	(c)	(d)	(e)	(f)		(g)	(h)	(i)	(j)	(k)	(l)	(m)	(n)	(o)	(p)	(q)	(r)
		02921	SD-07 Certificates															
			Seed	2.1	G RE													
			Topsoil	2.2														
			Fertilizer	2.3.1														
			Mulch	2.4														
			Pesticide	2.6	G RE													
			SD-11 Closeout Submittals															
			Quantity Check	3.5														
			Seed Establishment Period	3.9														
			Maintenance Record	3.9.3.4														
			Application of Pesticide	3.6	G RE													
		02930a	SD-02 Shop Drawings															
			Finished Grade, Topsoil and	3.2.1														
			Underground Utilities															
			SD-03 Product Data															
			Geotextile	2.5														
			Chemical Treatment Material	1.4.3.2														
			Equipment	3.7.2														
			Delivery	1.4.1														
			Plant Establishment Period	3.9														
			Maintenance Record	3.9.2.6														
			Application of Pesticide	3.7														
			SD-04 Samples															
			Delivered Topsoil	1.4.1.3														
			Soil Amendments	3.1.4.2														
			Mulch	2.4														

SUBMITTAL REGISTER

CONTRACT NO.

TITLE AND LOCATION
Perry Creek, Phase 4, Sioux City, IA

CONTRACTOR

ACTIVITY NO	TRANSMITTAL NO	SPEC SECT	DESCRIPTION ITEM SUBMITTED	PARAGRAPH #	CLASSIFICATION	GOVT OR A/E REVWR	CONTRACTOR: SCHEDULE DATES			CONTRACTOR ACTION			APPROVING AUTHORITY					MAILED TO CONTR/ DATE RCD FRM APPR AUTH	REMARKS
							SUBMIT	APPROVAL NEEDED BY	MATERIAL NEEDED BY	ACTION CODE	DATE OF ACTION	DATE FWD TO APPR AUTH/ DATE RCD FROM CONTR	DATE FWD TO OTHER REVIEWER	DATE RCD FROM OTH REVIEWER	ACTION CODE	DATE OF ACTION			
(a)	(b)	(c)	(d)	(e)	(f)		(g)	(h)	(i)	(j)	(k)	(l)	(m)	(n)	(o)	(p)	(q)	(r)
		02930a	Geotextile	2.5															
			SD-06 Test Reports																
			Soil Test	3.1.4.2															
			Percolation Test	3.1.4.1															
			SD-07 Certificates																
			Plant Material	2.1															
			Topsoil	2.2															
			Fertilizer	2.3.1															
			Organic Material	2.3.2															
			Soil Conditioner	2.3.3															
			Organic Mulch	2.4.1															
			Mycorrhizal Fungi Inoculum	2.9															
			Pesticide	2.11															
			SD-10 Operation and Maintenance																
			Data																
			Maintenance Instructions	3.9.5															
		03101	SD-03 Product Data																
			Materials	2.1															
		03150	SD-03 Product Data																
			Preformed Expansion Joint Filler	2.1															
			Sealant	2.2															
			Waterstops	2.3															
			SD-04 Samples																
			Non-metallic Materials	2.3.1															
			SD-07 Certificates																
			Preformed Expansion Joint Filler	2.1															

SUBMITTAL REGISTER

CONTRACT NO.

TITLE AND LOCATION
Perry Creek, Phase 4, Sioux City, IA

CONTRACTOR

ACTIVITY NO	TRANSMITTAL NO	SPEC SECT	DESCRIPTION ITEM SUBMITTED	PARAGRAPH #	CLASSIFICATION	GOVT OR A/E REVWR	CONTRACTOR: SCHEDULE DATES			CONTRACTOR ACTION			APPROVING AUTHORITY					
							SUBMIT	APPROVAL NEEDED BY	MATERIAL NEEDED BY	ACTION CODE	DATE OF ACTION	DATE FWD TO APPR AUTH/ DATE RCD FROM CONTR	DATE FWD TO OTHER REVIEWER	DATE RCD FROM OTH REVIEWER	ACTION CODE	DATE OF ACTION	MAILED TO CONTR/ DATE RCD FRM APPR AUTH	REMARKS
(a)	(b)	(c)	(d)	(e)	(f)		(g)	(h)	(i)	(j)	(k)	(l)	(m)	(n)	(o)	(p)	(q)	(r)
		03150	Sealant	2.2														
			Waterstops	2.3														
		03201	SD-02 Shop Drawings															
			Fabrication and Placement	3.1	G	ED												
			SD-03 Product Data															
			Materials	2.1	G	RE												
			SD-06 Test Reports															
			Material	2.2	G	RE												
			Tests, Inspections, and	2.2	G	RE												
			Verifications															
		03301	SD-03 Product Data															
			Concrete Mixture Proportioning	2.2	G	ED												
			Batch Plant	3.1.2														
			Concrete Mixers	3.1.3														
			Conveying Equipment	3.1.4														
			Placing Equipment	3.1.1														
			Testing Technicians	3.6.1														
			Concrete Construction Inspector	3.6.1														
			Construction Joint Treatment	3.2.3	G	RE												
			Curing and Protection	3.5	G	RE												
			Cold-Weather Placing	3.3.4	G	RE												
			Hot-Weather Placing	3.3.5	G	RE												
			SD-06 Test Reports															
			Quality of Aggregates	2.1.2.1	G	RE												
			Mixer Uniformity	3.6.2.12														
			Tests and Inspections	3.6														

SUBMITTAL REGISTER

CONTRACT NO.

TITLE AND LOCATION
Perry Creek, Phase 4, Sioux City, IA

CONTRACTOR

ACTIVITY NO	TRANSMITTAL NO	SPEC SECT	DESCRIPTION ITEM SUBMITTED	PARAGRAPH #	CLASSIFICATION	GOVT OR A/E REVWR	CONTRACTOR: SCHEDULE DATES			CONTRACTOR ACTION			APPROVING AUTHORITY					MAILED TO CONTR/ DATE RCD FRM APPR AUTH	REMARKS
							SUBMIT	APPROVAL NEEDED BY	MATERIAL NEEDED BY	ACTION CODE	DATE OF ACTION	DATE FWD TO APPR AUTH/ DATE RCD FROM CONTR	DATE FWD TO OTHER REVIEWER	DATE RCD FROM OTH REVIEWER	ACTION CODE	DATE OF ACTION		
(a)	(b)	(c)	(d)	(e)	(f)		(g)	(h)	(i)	(j)	(k)	(l)	(m)	(n)	(o)	(p)	(q)	(r)
		03301	SD-07 Certificates															
			Cementitious Materials	2.1.1	G RE													
			Air-Entraining Admixture	2.1.3.1														
			Other Chemical Admixtures	2.1.3.4														
			Membrane-Forming Curing	2.1.4.1														
			Compound															
			Epoxy Resin	2.1.7														
			Latex Bonding Compound	2.1.6														
		13280	SD-03 Product Data															
			Respiratory Protection Program	1.12	G ED-G													
			Cleanup and Disposal	3.10	GED-GI													
			Detailed Drawings	3.6.5.1	GED-GI													
			Materials and Equipment															
			Accident Prevention															
			Plan;G-ED-GI															
			Qualifications	1.5	GED-GI													
			Training Program	1.11														
			FIO,															
			Medical Requirements	1.10														
			Encapsulants	2.1														
			SD-06 Test Reports															
			Exposure Assessment and Air	3.8	GED-GI													
			Monitoring															
			Licenses, Permits and	1.14	GED-GI													
			Notifications															
			SD-07 Certificates															

SUBMITTAL REGISTER

CONTRACT NO.

TITLE AND LOCATION
Perry Creek, Phase 4, Sioux City, IA

CONTRACTOR

ACTIVITY NO	TRANSMITTAL NO	SPEC SECT	DESCRIPTION ITEM SUBMITTED	PARAGRAPH #	CLASSIFICATION	GOVT OR A/E REVWR	CONTRACTOR: SCHEDULE DATES			CONTRACTOR ACTION			APPROVING AUTHORITY					MAILED TO CONTR/ DATE RCD FRM APPR AUTH	REMARKS
							SUBMIT	APPROVAL NEEDED BY	MATERIAL NEEDED BY	ACTION CODE	DATE OF ACTION	DATE FWD TO APPR AUTH/ DATE RCD FROM CONTR	DATE FWD TO OTHER REVIEWER	DATE RCD FROM OTH REVIEWER	ACTION CODE	DATE OF ACTION			
(a)	(b)	(c)	(d)	(e)	(f)		(g)	(h)	(i)	(j)	(k)	(l)	(m)	(n)	(o)	(p)	(q)	(r)	
		13280	Vacuum, Filtrationand Ventilation																
			Equipment																

TRANSMITTAL OF SHOP DRAWINGS, EQUIPMENT DATA, MATERIAL SAMPLES, OR MANUFACTURER'S CERTIFICATES OF COMPLIANCE *(Read instructions on the reverse side prior to initiating this form)*	DATE	TRANSMITTAL NO.

SECTION I - REQUEST FOR APPROVAL OF THE FOLLOWING ITEMS *(This section will be initiated by the contractor)*

TO:	FROM:	CONTRACT NO.	CHECK ONE: ☐ THIS IS A NEW TRANSMITTAL ☐ THIS IS A RESUBMITTAL OF TRANSMITTAL _____
SPECIFICATION SEC. NO. *(Cover only one section with each transmittal)*	PROJECT TITLE AND LOCATION		CHECK ONE: THIS TRANSMITTAL IS FOR ☐ FIO ☐ GOV'T. APPROVAL

ITEM NO. *a.*	DESCRIPTION OF ITEM SUBMITTED *(Type size, model number/etc.)* *b.*	MFG OR CONTR. CAT., CURVE DRAWING OR BROCHURE NO. *(See instruction no. 8)* *c.*	NO. OF COPIES *d.*	CONTRACT REFERENCE DOCUMENT		FOR CONTRACTOR USE CODE *g.*	VARIATION *(See instruction No. 6)* *h.*	FOR CE USE CODE *i.*
				SPEC. PARA. NO. *e.*	DRAWING SHEET NO. *f.*			

REMARKS

I certify that the above submitted items have been reviewed in detail and are correct and in strict conformance with the contract drawings and specifications except as other wise stated.

_____

NAME AND SIGNATURE OF CONTRACTOR

SECTION II - APPROVAL ACTION

ENCLOSURES RETURNED *(List by Item No.)*	NAME, TITLE AND SIGNATURE OF APPROVING AUTHORITY	DATE

INSTRUCTIONS

1. Section I will be initiated by the Contractor in the required number of copies.

2. Each transmittal shall be numbered consecutively in the space provided for "Transmittal No.". This number, in addition to the contract number, will form a serial number for identifying each submittal. For new submittals or resubmittals mark the appropriate box; on resubmittals, insert transmittal number of last submission as well as the new submittal number.

3. The "Item No." will be the same "Item No." as indicated on ENG FORM 4288-R for each entry on this form.

4. Submittals requiring expeditious handling will be submitted on a separate form.

5. Separate transmittal form will be used for submittals under separate sections of the specifications.

6. A check shall be placed in the "Variation" column when a submittal is not in accordance with the plans and specifications--also, a written statement to that effect shall be included in the space provided for "Remarks".

7. Form is self-transmittal, letter of transmittal is not required.

8. When a sample of material or Manufacturer's Certificate of Compliance is transmitted, indicate "Sample" or "Certificate" in column c, Section I.

9. U.S. Army Corps of Engineers approving authority will assign action codes as indicated below in space provided in Section I, column i to each item submitted. In addition they will ensure enclosures are indicated and attached to the form prior to return to the contractor. The Contractor will assign action codes as indicated below in Section I, column g, to each item submitted.

THE FOLLOWING ACTION CODES ARE GIVEN TO ITEMS SUBMITTED

A	--	Approved as submitted.	E	--	Disapproved (See attached).
B	--	Approved, except as noted on drawings.	F	--	Receipt acknowledged.
C	--	Approved, except as noted on drawings. Refer to attached sheet resubmission required.	FX	--	Receipt acknowledged, does not comply as noted with contract requirements.
D	--	Will be returned by separate correspondence.	G	--	Other (*Specify)*

10. Approval of items does not relieve the contractor from complying with all the requirements of the contact plans and specifications.

(Reverse of ENG Form 4025-R)

SECTION TABLE OF CONTENTS

DIVISION 01 - GENERAL REQUIREMENTS

SECTION 01351

SAFETY, HEALTH, AND EMERGENCY RESPONSE (HTRW/UST)

01/01

PART 1 GENERAL

1.1 REFERENCES
1.2 DESCRIPTION OF WORK
1.3 SUBMITTALS
1.4 REGULATORY REQUIREMENTS
1.5 PRECONSTRUCTION SAFETY CONFERENCE
1.6 SAFETY AND HEALTH PROGRAM
1.7 SITE SAFETY AND HEALTH PLAN
1.7.1 Acceptance and Modifications
1.7.2 Availability
1.8 SITE DESCRIPTION AND CONTAMINATION CHARACTERIZATION
1.8.1 Project/Site Conditions
1.9 STAFF ORGANZATION, QUALIFICATION AND RESPONSIBILITIES
1.9.1 Safety and Health Manager
1.9.2 Site Safety and Health Officer
1.9.3 Persons Certified in First Aid and CPR
1.9.4 [Enter Appropriate Subpart Title Here]
1.10 TRAINING
1.10.1 General Hazardous Waste Operations Training
1.10.2 Initial Session (Pre-entry Briefing)
1.10.3 Periodic Sessions
1.11 PERSONAL PROTECTIVE EQUIPMENT
1.11.1 Site Specific PPE Program
1.11.2 Levels of Protection
1.11.2.1 Initial PPE Components
1.11.3 PPE for Government Personnel
1.12 MEDICAL SURVEILLANCE PROGRAM
1.13 EXPOSURE MONITORING/AIR SAMPLING PROGRAM
1.14 HEAT STRESS MANAGEMENT
1.14.1 Physiological Monitoring
1.14.2 ACGIH General Controls for Heat Stress
1.14.3 ACGIH Job Specific Controls for Heat Stress
1.15 SPILL AND DISCHARGE CONTROL
1.16 CONFINED SPACE ENTRY PROCEDURES
1.17 FIRE PROTECTION AND PREVENTION
1.18 ELECTRICAL SAFETY
1.19 EXCAVATION AND TRENCH SAFETY
1.20 GUARDING OF MACHINERY AND EQUIPMENT
1.21 LOCKOUT/TAGOUT
1.22 FALL PROTECTION
1.23 HAZARD COMMUNICATION
1.24 ILLUMINATION
1.25 SANITATION
1.26 ENGINEERING CONTROLS
1.27 SIGNS AND LABELS

1.28 WASTE DISPOSAL
1.29 SITE CONTROL MEASURES
1.29.1 Work Zones
1.29.2 Site Control Log
1.29.3 Communication
1.29.4 Site Security
1.30 PERSONAL HYGIENE AND DECONTAMINATION
1.30.1 Decontamination Facilities
1.30.2 Equipment Decontamination
1.30.2.1 Decontamination Facilities
1.30.2.2 Procedures
1.31 EMERGENCY EQUIPMENT AND FIRST AID REQUIREMENTS
1.32 EMERGENCY RESPONSE AND CONTINGENCY PROCEDURES
1.33 CERTIFICATE OF WORKER/VISITOR ACKNOWLEDGEMENT
1.34 INSPECTIONS
1.35 SAFETY AND HEALTH PHASE-OUT REPORT

PART 2 PRODUCTS (Not Applicable)

PART 3 EXECUTION (Not Applicable)

-- End of Section Table of Contents --

SECTION 01351

SAFETY, HEALTH, AND EMERGENCY RESPONSE (HTRW/UST)
01/01

PART 1 GENERAL

Soil in the project area may be contaminated with petroleum products (also see Section 02315 EXCAVATION, TRENCHING AND BACKFILLING FOR STRUCTURES and Section 01450 CHEMICAL DATA QUALITY CONTROL). Health and safety requirements in this specification section apply only to workers performing tasks involving excavation and any other tasks where contact with contaminated soil is likely.

1.1 REFERENCES

The publications listed below form a part of this specification to the extent referenced. The publications are referred to in the text by basic designation only.

AMERICAN CONFERENCE OF GOVERNMENTAL INDUSTRIAL HYGIENISTS (ACGIH)

ACGIH Limit Values	most recent issue) Threshold Limit Values for Chemical Substances and Physical Agents Biological Exposure Indices

AMERICAN NATIONAL STANDARDS INSTITUTE (ANSI)

ANSI Z358.1	(1998) Emergency Eyewash and Shower Equipment

CODE OF FEDERAL REGULATIONS (CFR)

29 CFR 1904	Recording and Reporting Occupational Injuries and Illnesses
29 CFR 1910	Occupational Safety and Health Standards
29 CFR 1926	Safety and Health Regulations for Construction

ENGINEERING MANUALS/REGULATIONS (EM)

EM 385-1-1	(1996) U.S. Army Corps of Engineers Safety and Health Requirements Manual

ENGINEERING REGULATIONS (ER)

ER 385-1-92	(2000) Safety and Occupational Requirements for Hazardous, Toxic, and Radioactive Waste (HTRW) Activities

NATIONAL INSTITUTE FOR OCCUPATIONAL SAFETY AND HEALTH (NIOSH)

NIOSH Pub No. 85-115	(1985) Occupational Safety and Health

Guidance Manual for Hazardous Waste Site Activities

1.2 DESCRIPTION OF WORK

This section requires contractors to implement practices and procedures for working safely and in compliance with OSHA and USACE regulation while performing cleanup activities on uncontrolled hazardous waste sites.

1.3 SUBMITTALS

Government approval is required for submittals with a "G" designation; submittals not having a "G" designation are for information only. When used, a designation following the "G" designation identifies the office that will review the submittal for the Government. The following shall be submitted in accordance with Section 01330 SUBMITTAL PROCEDURES:

SD-03 Product Data

Exposure Monitoring/Air Sampling Program; G,

Personnel exposure monitoring/sampling results.

Site Control Log; G,

Record of each entry and exit into the site, as specified.

HAZWOPER Qualifications Certificates; G,

A certificate for each worker performing cleanup operations with potential for unacceptable occupational exposure signed by the safety and health manager and the occupational physician indicating the workers meet the training and medical surveillance requirements of this contract.

1.4 REGULATORY REQUIREMENTS

Work performed under this contract shall comply with EM 385-1-1, OSHA requirements in 29 CFR 1910 and 29 CFR 1926, especially OSHA's Hazardous Waste Operations and Emergency Response Standard 29 CFR 1926.65/29 CFR 1910.120 and state specific OSHA requirements where applicable. Matters of interpretation of standards shall be submitted to the appropriate administrative agency for resolution before starting work. Where the requirements of this specification, applicable laws, criteria, ordinances, regulations, and referenced documents vary, the most stringent requirements shall apply.

1.5 PRECONSTRUCTION SAFETY CONFERENCE

A preconstruction conference shall be scheduled prior to the beginning of site work at which time representatives of the Contracting Officer will review and discuss requirements relative to planning and administration of the overall safety program..

1.6 SAFETY AND HEALTH PROGRAM

The Contractor shall develop and implement a Safety and Health Program (SHP) which incorporates requirements in OSHA standards 29 CFR 1910, Section .120 (b) and 29 CFR 1926, Section .65 (b) and section 01.A.07 of EM

385-1-1. The Safety and Health Program shall address the items in paragraph (b) of 29 CFR 1910.120/29 CFR 1926.65 and Appendix A of EM 385-1-1 in corporate specific detail. These items are: Signature Sheet; Background Information; Statement of Safety and Health Policy; Responsibilities and Lines of Authority; Subcontractors and Suppliers; Training; Safety and Health Inspections; Safety and Health Expectations, Incentives programs and Compliance; Accident Reporting; Medical Surveillance/Medical Support; Personal Protective Equipment; Standard Operating Procedures and Corporate Plans supporting occupational safety and health.

1.7 SITE SAFETY AND HEALTH PLAN

The Contractor shall develop and implement a Site Safety and Health Plan (SSHP) meeting the requirements of section 01.A.10 of EM 385-1-1 and 29 CFR 1910.120/29 CFR 1926.65 (b)(4). At a minimum, the SSHP shall address each element in Appendix C of ER 385-1-92 and shall incorporate an Activity Hazard Analysis meeting the requirements of 01.A.10 and Figure 1-1 of EM 385-1-1.

a. The SSHP shall be considered a living document and shall be updated as occupational safety and health conditions change during project execution and improved as occupational safety and health lessons are learned during the course of the project.

b. SSHP elements in Appendix C of ER 385-1-92 are: 1. Site Description and Contamination Characterization; 2. Activity Hazard Analysis; 3. Health and Safety Staff Organization, Qualifications and Responsibilities for the project; 4. Health and Safety Training requirements for the project; 5. Personal Protective Equipment; 6. Medical Surveillance requirements for the project; 7. Radiation Dosimetry, if applicable; 8. Exposure Monitoring/Air Sampling; 9. Heat Stress/Cold Stress Prevention; 10. Applicable elements of the Safety and Health Program edited to meet site specific conditions and site specific standard operating safety procedures, engineering controls and work practices used to reduce exposure to contaminants and prevent accidents; 11. Site Control Measures; 12. Personal Hygiene and Decontamination; 13. Equipment Decontamination; 14. Emergency Equipment and First Aid Requirements; 15. Emergency Response and Contingency Procedures. 16. Accident Prevention; 17. Logs, Reports and Recordkeeping.

1.7.1 Acceptance and Modifications

Prior to submittal, the SSHP shall be signed and dated by the Safety and Health Manager and the Site Superintendent. The SSHP shall be submitted for review 30 days prior to the Preconstruction Safety Conference. Deficiencies in the SSHP will be discussed at the preconstruction safety conference, and the SSHP shall be revised to correct the deficiencies and resubmitted for acceptance. Onsite work shall not begin until the plan has been accepted. A copy of the written SSHP shall be maintained onsite. Changes and modifications to the accepted SSHP shall be made with the knowledge and concurrence of the Safety and Health Manager, the Site Superintendent, and the Contracting Officer. Should any unforeseen hazard become evident during the performance of the work, the Site Safety and Health Officer (SSHO) shall bring such hazard to the attention of the Safety and Health Manager, the Site Superintendent, and the Contracting Officer, both verbally and in writing, for resolution as soon as possible. In the interim, necessary action shall be taken to re-establish and maintain safe working conditions in order to safeguard onsite personnel,

visitors, the public, and the environment. Disregard for the provisions of this specification or the accepted SSHP shall be cause for stopping of work until the matter has been rectified.

1.7.2 Availability

The SSHP shall be made available in accordance with 29 CFR 1910, Section .120 (b)(1)(v) and 29 CFR 1926, Section .65 (b)(1)(v).

1.8 SITE DESCRIPTION AND CONTAMINATION CHARACTERIZATION

1.8.1 Project/Site Conditions

Soil in the area of excavation are likely to be contaminated with petroleum products. Removed contaminated soil shall be handled as described in Section 01450 CHEMICAL DATA QUALITY CONTROL.

Anticipated tasks and operations at the site include:

a. mobilization
b. excavation/trenching
c. sampling
d. backfilling
e. decontamination
f. demobilization

The Contractor shall develop a safety and health hazard/risk analysis for each site task to be performed. Address the potential hazards associated with each task, including safety hazards, chemical hazards, physical agents, and biological hazards. For chemical hazards, develop appropriate action levels and discuss the required actions associated with the action levels. It is the Contractor's responsibility to reevaluate occupational safety and health hazards as the work progresses and to adjust the PPE and onsite operations, if necessary, so that the work is performed safely.

1.9 STAFF ORGANZATION, QUALIFICATION AND RESPONSIBILITIES

1.9.1 Safety and Health Manager

Safety and Health Manager shall be an Industrial Hygienist certified by the American Board of Industrial Hygiene.

1). The Safety and Health Manager shall have the following additional qualifications:

a. A minimum of 2years experience in developing and implementing safety and health programs at hazardous waste sites, petroleum contaminated sites, orat underground storage tank removal projects.

b. Documented experience in supervising professional and technician level personnel.

c. Documented experience in developing worker exposure assessment programs and air monitoring programs and techniques.

d. Documented experience in the development of personal protective equipment programs, including programs for working in and around potentially toxic, flammable and combustible atmospheres and confined spaces.

e. Working knowledge of state and Federal occupational safety and health regulations.

2). The Safety and Health Manager shall:

a. Be responsible for the development, implementation, oversight, and enforcement of the SSHP.

b. Sign and date the SSHP prior to submittal.

c. Visit the site as needed for the duration of activities, to audit the effectiveness of the SSHP.

d. Be available for emergencies.

e. Provide onsite consultation as needed to ensure the SSHP is fully implemented.

f. Coordinate any modifications to the SSHP with the Site Superintendent, the SSHO, and the Contracting Officer.

g. Provide continued support for upgrading/downgrading of the level of personal protection.

h. Be responsible for evaluating air monitoring data and recommending changes to engineering controls, work practices, and PPE.

i. Review accident reports and results of daily inspections.

j. Serve as a member of the Contractor's quality control staff.

1.9.2 Site Safety and Health Officer

An individual and one alternate shall be designated the Site Safety and Health Officer (SSHO). The name, qualifications (education and training summary and documentation), and work experience of the Site Safety and Health Officer and the alternateshall be included in the SSHP.

1). The SSHO shall have the following qualifications:

a. A minimum of 2 years experience in implementing safety and health programs at hazardous waste sites, petroleum contaminated sites, or]at underground storage tank removal projects where personal protective equipment was required.

b. Documented experience in construction techniques and construction safety procedures.

c. Working knowledge of Federal and state occupational safety and health regulations.

d. Specific training in personal and respiratory protective equipment program implementation, confined space program oversight, and in the proper use of air monitoring instruments, and air sampling methods

2). The Site Safety and Health Officer shall:

a. Assist and represent the Safety and Health Manager in onsite

training and the day to day onsite implementation and enforcement of the accepted SSHP.

b. Be assigned to the site on a full time basis for the duration of field activities involving potential exposure to contaminated soil. If operations are performed during more than 1 work shift per day, a site Safety and Health Officer shall be present for each shift

c. Have authority to ensure site compliance with specified safety and health requirements, Federal, state and OSHA regulations and all aspects of the SSHP including, but not limited to, activity hazard analyses, air monitoring, monitoring for ionizing radiation, use of PPE, decontamination, site control, standard operating procedures used to minimize hazards, safe use of engineering controls, the emergency response plan, confined space entry procedures, spill containment program, and preparation of records by performing a daily safety and health inspection and documenting results on the Daily Safety Inspection Log in accordance with 29 CFR 1904.

d. Have authority to stop work if unacceptable health or safety conditions exist, and take necessary action to re-establish and maintain safe working conditions.

e. Consult with and coordinate any modifications to the SSHP with the Safety and Health Manager, the Site Superintendent, and the Contracting Officer.

f. Serve as a member of the Contractor's quality control staff on matters relating to safety and health.

g. Conduct accident investigations and prepare accident reports.

h. Review results of daily quality control inspections and document safety and health findings into the Daily Safety Inspection Log.

i. In coordination with site management and the Safety and Health Manager, recommend corrective actions for identified deficiencies and oversee the corrective actions.

1.9.3 Persons Certified in First Aid and CPR

At least two persons who are currently certified in first aid and CPR by the American Red Cross or other approved agency shall be onsite at all times during site operations. They shall be trained in universal precautions and the use of PPE as described in the Bloodborne Pathogens Standard of 29 CFR 1910, Section .1030. These persons may perform other duties but shall be immediately available to render first aid when needed.

1.9.4 [Enter Appropriate Subpart Title Here]

1.10 TRAINING

The Contractor's training program for workers performing cleanup operations and who will be exposed to contaminants shall meet the following requirements. The Contractor shall be certified in the State of Iowa to perform work for underground storage tank removals.

1.10.1 General Hazardous Waste Operations Training

All Personnel performing duties with potential for exposure to on-site contaminants shall meet and maintain the following 29 CFR 1910.120/29 CFR 1926.65 (e) training requirements:

a. 40 hours of off site hazardous waste instruction.

b. 3 days actual field experience under the direct supervision of a trained, experienced supervisor.

c. 8 hours refresher training annually.

Onsite supervisors shall have an additional 8 hours management and supervisor training specified in 29 CFR 1910.120/29 CFR 1926.65 (e) (4).

1.10.2 Initial Session (Pre-entry Briefing)

Prior to commencement of onsite field activities, all site employees, including those assigned only to the Support Zone, shall attend a site-specific safety and health training session This session shall be conducted to ensure that all personnel are familiar with requirements and responsibilities for maintaining a safe and healthful work environment. Procedures and contents of the accepted SSHP and Sections 01.B.02 and 28.D.03 of EM 385-1-1 shall be thoroughly discussed. The Contracting Officer shall be notified at least 5 days prior to the initial site-specific training session so government personnel involved in the project may attend.

1.10.3 Periodic Sessions

Periodic onsite training shall be conducted by the SSHO at least weekly for personnel assigned to work at the site during the following week and whenever site conditions. work procedures, or site personnel change. The training shall address safety and health procedures, work practices, any changes in the SSHP, activity hazard analyses, work tasks, or schedule; results of previous week's air monitoring, review of safety discrepancies and accidents. Should an operational change affecting onsite field work be made, a meeting prior to implementation of the change shall be convened to explain safety and health procedures. Site-specific training sessions for new personnel, visitors, and suppliers shall be conducted by the SSHO using the training curriculum outlines developed by the Safety and Health Manager.

1.11 PERSONAL PROTECTIVE EQUIPMENT

1.11.1 Site Specific PPE Program

Onsite personnel exposed to contaminants shall be provided with appropriate personal protective equipment. Components of levels of protection (B, C, D and modifications) must be relevant to site-specific conditions, including heat and cold stress potential and safety hazards. Only respirators approved by NIOSH shall be used. Protective equipment and clothing shall be kept clean and well maintained. The PPE section of the SSHP shall include site-specific procedures to determine PPE program effectiveness and for onsite fit-testing of respirators, cleaning, maintenance, inspection, and storage of PPE.

1.11.2 Levels of Protection

The Safety and Health Manager shall establish and evaluate as the work progresses the levels of protection for each work activity. The Safety and Health Manager shall also establish action levels for upgrade or downgrade in levels of PPE. Protocols and the communication network for changing the level of protection shall be described in the SSHP. The PPE evaluation protocol shall address air monitoring results, potential for exposure,

changes in site conditions, work phases, job tasks, weather, temperature extremes, individual medical considerations, etc.

1.11.2.1 Initial PPE Components

The following items constitute minimum protective clothing and equipment ensembles to be utilized during this project:consider use of cotton or cotton/polyester blend coveralls for level D and level C PPE ensembles

Level D. Appropriate Level D protective equipment may include
a. gloves (appropriate to protect against task-specific hazards),
b. hard hat,
c. coveralls,
d. chemical-resistant, steel-toe boots or shoes,
e. and hearing protection is needed.

Modified Level D. .Regular or coated Tyvek coveralls with hoods and elastic wrist and ankles are added to Level D protective equipment.

Level C.

a. air purifying respirator with organic vapor or OV/combination cartridges
b. hard hat
c. regular or coated disposable coveralls with hoods and elastic wrists and ankles
d. gloves appropriate to protect against task-specific chemical and physical hazards
e. steel toe work boots with disposable boot covers
f. hearing protection (if necessary)

Level B. N/A.

1.11.3 PPE for Government Personnel

Threeclean sets of personal protective equipment and clothing (excluding air-purifying negative-pressure respirators and safety shoes, which will be provided by individual visitors), as required for entry into the Exclusion Zone and/or Contamination Reduction Zone, shall be available for use by the Contracting Officer or official visitors. The items shall be cleaned and maintained by the Contractor and stored in a clean area and clearly marked: "FOR USE BY GOVERNMENT ONLY." The Contractor shall provide basic training in the use and limitations of the PPE provided.

1.12 MEDICAL SURVEILLANCE PROGRAM

The Contractor's medical surveillance program for workers performing cleanup operations and who will be exposed to contaminants shall meet 29 CFR 1910.120/1926.65 (f) and the following requirements. The Contractor shall assure the Occupational Physician or the physician's designee performs the physical examinations and reviews examination results. Participation in the medical surveillance program shall be without cost to the employee, without loss of pay and at a reasonable time and place.

1.13 EXPOSURE MONITORING/AIR SAMPLING PROGRAM

The Safety and Health Manager shall prepare and implement an exposure monitoring/air sampling program to identify and quantify safety and health hazards and airborne levels of hazardous substances in order to assure

proper selection of engineering controls, work practices and personal protective equipment for affected site personnel.

1.14 HEAT STRESS MANAGEMENT

The Contractor shall establish a heat stress management program and implement it when the ambient temperature exceeds 70 Degrees F. The heat stress management program shall consist of the following procedures and practices.

1.14.1 Physiological Monitoring

The contractor shall establish a heat stress management program and implement it when the ambient temperature exceeds 70 degrees F. The Contractor shall train or otherwise assure workers heart rates and body core temperatures are monitored and assure that threshold levels in Table 4 of ACGIH Limit Values are not exceeded.

1.14.2 ACGIH General Controls for Heat Stress

The Contractor shall implement general heat stress control procedures in Table 5 of ACGIH Limit Values as part of his heat stress management program.

1.14.3 ACGIH Job Specific Controls for Heat Stress

The Contractor shall implement job specific heat stress controls in Table 5 of ACGIH Limit Values when site specific conditions warrant.

1.15 SPILL AND DISCHARGE CONTROL

Written spill and discharge containment/control procedures shall be developed and implemented. These procedures shall describe prevention measures, such as building berms or dikes; spill control measures and material to be used (e.g. booms, vermiculite); location of the spill control material; personal protective equipment required to cleanup spills; disposal of contaminated material; and who is responsible to report the spill. Storage of contaminated material or hazardous materials shall be appropriately bermed, diked and/or contained to prevent any spillage of material on uncontaminated soil. If the spill or discharge is reportable, and/or human health or the environment are threatened, the National Response Center, the state, and the Contracting Officer shall be notified as soon as possible.

1.16 CONFINED SPACE ENTRY PROCEDURES

If appropriate, the Contractor will follow provisions of 29 CFR 1910.146 and the guidance in EM 385-1-1,Section 6I if UST must be entered.

1.17 FIRE PROTECTION AND PREVENTION

Comply with all applicable provisions of 29 CFR 1926 Subpart F.

1.18 ELECTRICAL SAFETY

If temporary electrical power is used for this project, it shall conform to the National Electric Code, the National Electricity Safety Code and EM 385-1-1. Motorized vehicles to be used on this project shall conform to EM 385-1-1. Air monitoring and sampling equipment shall be rated as intrinsically safe. All portable electrical equipment shall be protected by

Ground Fault Circuit Interrupters (GFCI) Clearance to adjacent overhead transmission and distribution electrical lines shall be sufficient tor the movement of vehicles and operation of construction equipment.

1.19 EXCAVATION AND TRENCH SAFETY

The Contractor shall comply with the requirements of 29 CFR 1926.650-652 when workers are exposed to the potential of excavation cave-ins. The designated competent person shall determine the excavation to be safe prior to worker entrance, regardless of the depth of the excavation.

1.20 GUARDING OF MACHINERY AND EQUIPMENT

Where applicable, comply with the requirements of EM 385-1-1, Section 16.

1.21 LOCKOUT/TAGOUT

The Contractor shall comply with all applicable requirements of 29 CFR 1910.147, 29 CFR 1910.301-305, and EM 385-1-1, Section 12, at a minimum.

1.22 FALL PROTECTION

The Contractor shall comply with all applicable requirements of 29 CFR 1926.500-503.

1.23 HAZARD COMMUNICATION

A hazard communication program shall be established and implemented in accordance with 29 CFR 1926.59. This shall include the development of a written Hazard Communication Plan that shall be included as part of the SSHP and kept on-site, as required by 29 CFR 1926.59(e)(1).

1.24 ILLUMINATION

The Contractor shall comply with the requirements of 29 CFR 1926.26.

1.25 SANITATION

a. Washing facilities. The Contractor shall provide washing facilities in the support zone consisting of water, towels, and soap for men and women as necessary.

b. The contractor shall provide potable water in the support zone work areas and shall

(1) clearly marked containers of potable water
(2) ensure potable water containers are not used for any other purpose
(3) mark nonpotable water outlets as unsafe for drinking
(4) keep drinking cups in sanitary receptacle
(5) provide receptacles if disposable cups are provided, and
(6) ensure that there are no cross-connections between potable and nonpotable sources

1.26 ENGINEERING CONTROLS

The Contractor shall implement feasible engineering and work practice controls to reduce and maintain employee exposure at or below OSHA PELs and ACGIH TLVs (the most restrictive shall apply) for hazardous substances that

may be encountered.

1.27 SIGNS AND LABELS

Before site operations, mark the perimeter with warning tape or other visual means. Post signs around the perimeter and at the entrance road or path that reads:

HAZARDOUS AREA - KEEP OUT

and that directs visitors to the authorized entrance. Signs shall be printed in bold large letters on contrasting backgrounds. Signs shall be visible form all points where entry might occur and at such distance from the restricted area that employees may read the signs and take necessary protective steps before entering.

1.28 WASTE DISPOSAL

Waste shall be handled, transported and disposed of in accordance with all Federal, state and local regulation. Provide detailed information regarding waste disposal procedures in the SSHP.

1.29 SITE CONTROL MEASURES

1.29.1 Work Zones

Work zone boundaries (exclusion zone, including restricted and regulated areas; contamination reduction zone; and support zone) and access points shall be established and the boundary delineations shall be included on the drawings and in the SSHP. Delineation of work zone boundaries shall be based on the contamination characterization data and the hazard/risk analysis to be performed as described in paragraph: HAZARD/RISK ANALYSIS. As work progresses and field conditions are monitored, work zone boundaries may be modified with approval of the Contracting Officer. Work zones shall be clearly identified and marked in the field (using fences, tape, signs, etc.). A site map, showing work zone boundaries and locations of decontamination facilities, shall be posted in the onsite office. Work zones shall consist of the following:

a. Exclusion Zone (EZ): The exclusion zone is the area where hazardous contamination is either known or expected to occur and the greatest potential for exposure exists. Entry into this area shall be controlled and exit may only be made through the CRZ.

b. Contamination Reduction Zone (CRZ): The CRZ is the transition area between the Exclusion Zone and the Support Zone. The personnel and equipment decontamination areas shall be separate and unique areas located in the CRZ.

c. Support Zone (SZ): The Support Zone is defined as areas of the site, other than exclusion zones and contamination reduction zones, where workers do not have the potential to be exposed to hazardous substances or dangerous conditions resulting from hazardous waste operations. The Support Zone shall be secured against active or passive contamination. Site offices, parking areas, and other support facilities shall be located in the Support Zone.

1.29.2 Site Control Log

A log of personnel visiting, entering, or working on the site shall be

maintained. The log shall include the following: date, name, agency or company, time entering and exiting site, time entering and exiting the exclusion zone (if applicable), and personal protective equipment utilized. Before visitors are allowed to enter the Contamination Reduction Zone or Exclusion Zone, they shall show proof of current training, medical surveillance and respirator fit testing (if respirators are required for the tasks to be performed) and shall fill out the Certificate of Worker or Visitor Acknowledgment. This visitor information, including date, shall be recorded in the log.

1.29.3 Communication

An employee alarm system that has adequate means of on and off site communication shall be provided and installed in accordance with 29 CFR 1910 Section .165. The means of communication shall be able to be perceived above ambient noise or light levels by employees in the affected portions of the workplace. The signals shall be distinctive and recognizable as messages to evacuate or to perform critical operations.

1.29.4 Site Security

Signs shall be printed in bold large letters on contrasting backgrounds in English and/or where appropriate, in the predominant language of workers unable to read English. Signs shall be visible from all points where entry might occur and at such distances from the restricted area that employees may read the signs and take necessary protective steps before entering. Ensure employees use designated access points for movement of personnel and equipment between zones and on and off site. Restrict site access to Government authorized or Contractor certified personnel.

1.30 PERSONAL HYGIENE AND DECONTAMINATION

Personnel entering the Exclusion or Contamination Reduction Zones or otherwise exposed or subject to exposure to hazardous chemical vapors, liquids, or contaminated solids shall adhere to the following personal hygiene and decontamination provisions. Decontamination shall be performed in the CRZ prior to entering the Support Zone from the Exclusion Zone. Chapter 10.0 of NIOSH Pub No. 85-115 shall be consulted when preparing decontamination procedures. A detailed discussion of personal hygiene and decontamination facilities and procedures to be followed by site workers shall be submitted as part of the SSHP. Employees shall be trained in the procedures and the procedures shall be enforced throughout site operations. Persons disregarding these provisions of the SSHP shall be barred from the site.

1.30.1 Decontamination Facilities

The Contractor shall initially set up a decontamination line in the CRZ. Employees shall exit the exclusion zone through the CRZ and shall implement the decontamination procedures and techniques as outlined in the SSHP.: It is the site safety and health officer's responsibility to recommend techniques to improve personnel decontamination techniques and procedures, if necessary.

1.30.2 Equipment Decontamination

Vehicles and equipment used in the EZ shall be decontaminated in the CRZ prior to leaving the site.

1.30.2.1 Decontamination Facilities

A vehicle/equipment decontamination station shall be provided within the CRZ for decontaminating vehicles and equipment leaving the EZ. The decontamination components shall be proposed in the Contractor's SSHP. Include information concerning the surface to be used to protect the ground from contamination, any collection system for decontamination water, and methods to be used to decontaminate the equipment.A designated "clean area" in the CRZ for performing equipment maintenance. This area shall be used when personnel are required by normal practices to come in contact with the ground, i.e., crawling under a vehicle to change engine oil. Equipment within the EZ or CRZ shall be decontaminated before maintenance is performed.

1.30.2.2 Procedures

Procedures for equipment decontamination shall be developed and utilized to prevent the spread of contamination into the SZ and offsite areas. These procedures shall address disposal of contaminated products and spent materials used on the site, including containers, fluids, oils, etc. Any item taken into the EZ shall be assumed to be contaminated and shall be inspected and/or decontaminated before the item leaves the area. Vehicles, equipment, and materials shall be cleaned and decontaminated prior to leaving the site. Construction material shall be handled in such a way as to minimize the potential for contaminants being spread and/or carried offsite. Prior to exiting the site, vehicles and equipment shall be monitored to ensure the adequacy of decontamination.

1.31 EMERGENCY EQUIPMENT AND FIRST AID REQUIREMENTS

The following items, as a minimum, shall be maintained onsite and available for immediate use:

a. First aid equipment and supplies approved by the consulting physician.

b. Emergency eyewashes and showers which comply with ANSI Z358.1.

d. Fire extinguishers with a minimum rating of 20-A:120-B:Cshall be provided at site facilities and in all vehicles and at any other site locations where flammable or combustible materials present a fire risk.

1.32 EMERGENCY RESPONSE AND CONTINGENCY PROCEDURES

An Emergency Response Plan, that meets the requirements of 29 CFR 1910 Section .120 (l) and 29 CFR 1926 Section .65 (l), shall be developed and implemented as a section of the SSHP. In the event of any emergency associated with remedial action, the Contractor shall, without delay, alert all onsite employees that there is an emergency situation; take action to remove or otherwise minimize the cause of the emergency; alert the Contracting Officer; and institute measures necessary to prevent repetition of the conditions or actions leading to, or resulting in, the emergency. Employees that are required to respond to hazardous emergency situations shall be trained in how to respond to such expected emergencies. The plan shall be reviewed periodically and revised as necessary to reflect new or changing site conditions or information. Copies of the accepted SSHP and revisions shall be provided to the affected local emergency response agencies. The following elements, as a minimum, shall be addressed in the plan:

a. Pre-emergency planning. Contact the local emergency response planner during preparation of the Emergency Response Plan. The contractor shall arrange to have fire, rescue, medical and police security services provided by local emergency responders. The Contractor shall ensure the Emergency Response Plan for the site is compatible and integrated with the local fire, rescue, medical and police security services available from local emergency response planning agencies.

b. Personnel roles, lines of authority, communications for emergencies.

c. Emergency recognition and prevention.

d. Site topography, layout, and prevailing weather conditions.

e. Criteria and procedures for site evacuation (emergency alerting procedures, employee alarm system, emergency PPE and equipment, safe distances, places of refuge, evacuation routes, site security and control).

f. Specific procedures for decontamination and medical treatment of injured personnel.

g. Route maps to nearest prenotified medical facility. Site-support vehicles shall be equipped with maps. At the beginning of project operations, drivers of the support vehicles shall become familiar with the emergency route and the travel time required.

h. Emergency alerting and response procedures including posted instructions and a list of names and telephone numbers of emergency contacts (physician, nearby medical facility, fire and police departments, ambulance service, Federal, state, and local environmental agencies; as well as Safety and Health Manager, the Site Superintendent, the Contracting Officer and/or their alternates).

i. Criteria for initiating community alert program, contacts, and responsibilities.

j. Procedures for reporting incidents to appropriate government agencies. In the event that an incident such as an explosion or fire, or a spill or release of toxic materials occurs during the course of the project, the appropriate government agencies shall be immediately notified. In addition, the Contracting Officer shall be verbally notified immediately and receive a written notification within 24 hours. The report shall include the following items:

(1) Name, organization, telephone number, and location of the Contractor.

(2) Name and title of the person(s) reporting.

(3) Date and time of the incident.

(4) Location of the incident, i.e., site location, facility name.

(5) Brief summary of the incident giving pertinent details including type of operation ongoing at the time of the incident.

(6) Cause of the incident, if known.

(7) Casualties (fatalities, disabling injuries).

(8) Details of any existing chemical hazard or contamination.

(9) Estimated property damage, if applicable.

(10) Nature of damage, effect on contract schedule.

(11) Action taken to ensure safety and security.

(12) Other damage or injuries sustained, public or private.

k. Procedures for critique of emergency responses and follow-up.

1.33 CERTIFICATE OF WORKER/VISITOR ACKNOWLEDGEMENT

A copy of a Contractor-generated certificate of worker/visitor acknowledgement shall be completed and submitted for each visitor allowed to enter contamination reduction or exclusion zones, and for each employee.

1.34 INSPECTIONS

The SSHO's Daily Inspection Logs shall be attached to and submitted with the Daily Quality Control reports. Each entry shall include the following: date, work area checked, employees present in work area, PPE and work equipment being used in each area, special safety and health issues and notes, and signature of preparer. In the event of an accident, the Contracting Officer shall be notified according to EM 385-1-1. Within 1 working day of any reportable accident, a Notification of Accident - First Report (NWO Form 1880) shall be completed according to DM 385-1-1. An Accident Report shall be completed on ENG Form 3394 and submitted at a later time if required.

1.35 SAFETY AND HEALTH PHASE-OUT REPORT

A Safety and Health Phase-Out Report shall be submitted within 10 working days following completion of the work, prior to final acceptance of the work. The following minimum information shall be included:

a. Summary of the overall performance of safety and health (accidents or incidents including near misses, unusual events, lessons learned, etc.).

b. Final decontamination documentation including procedures and techniques used to decontaminate equipment, vehicles, and on site facilities.

c. Summary of exposure monitoring and air sampling accomplished during the project.

d. Signatures of Safety and Health Manager and SSHO.

Task Hazard and Control Requirements Sheet.

Task _____

Initial Anticipated Hazards_____

Initial PPE_____

Initial Controls_____

Initial Exposure Monitoring _____

HAZWOPER Medical Surveillance Required yes no

HAZWOPER Training Required yes no

PART 2 PRODUCTS (Not Applicable)

PART 3 EXECUTION (Not Applicable)

-- End of Section --

SECTION TABLE OF CONTENTS

DIVISION 01 - GENERAL REQUIREMENTS

SECTION 01355

ENVIRONMENTAL PROTECTION

10/00

PART 1 GENERAL

1.1 REFERENCES
1.2 DEFINITIONS
1.2.1 Environmental Pollution and Damage
1.2.2 Environmental Protection
1.2.3 Contractor Generated Hazardous Waste
1.2.4 Land Application for Discharge Water
1.2.5 Pesticide
1.2.6 Pests
1.2.7 Surface Discharge
1.2.8 Waters of the United States
1.2.9 Wetlands
1.3 GENERAL REQUIREMENTS
1.4 SUBCONTRACTORS
1.5 PAYMENT
1.6 SUBMITTALS
1.7 ENVIRONMENTAL PROTECTION PLAN
1.7.1 Compliance
1.7.2 Contents
1.7.3 Appendix
1.8 PROTECTION FEATURES
1.9 ENVIRONMENTAL ASSESSMENT OF CONTRACT DEVIATIONS
1.10 NOTIFICATION

PART 2 PRODUCTS (NOT USED)

PART 3 EXECUTION

3.1 ENVIRONMENTAL PERMITS AND COMMITMENTS
3.2 LAND RESOURCES
3.2.1 Work Area Limits
3.2.2 Landscape
3.2.3 Erosion and Sediment Controls
3.2.4 Contractor Facilities and Work Areas
3.3 WATER RESOURCES
3.3.1 Cofferdams, Diversions, and Dewatering Operations
3.3.2 Stream/Channel Crossings
3.3.3 Wetlands
3.4 AIR RESOURCES
3.4.1 Particulates
3.4.2 Odors
3.4.3 Sound Intrusions
3.4.4 Burning
3.5 MANAGEMENT AND DISPOSAL OF WASTE AND CHEMICAL MATERIALS

3.5.1 Solid Wastes
3.5.2 Chemicals and Chemical Wastes
3.5.3 Contractor Generated Hazardous Wastes/Excess Hazardous Materials
3.5.4 Fuel and Lubricants
3.5.5 Waste Water
3.6 RECYCLING AND WASTE MINIMIZATION
3.7 HISTORICAL, ARCHAEOLOGICAL, AND CULTURAL RESOURCES
3.8 BIOLOGICAL RESOURCES
3.9 INTEGRATED PEST MANAGEMENT
3.9.1 Pesticide Delivery and Storage
3.9.2 Qualifications
3.9.3 Pesticide Handling Requirements
3.9.4 Application
3.10 PREVIOUSLY USED EQUIPMENT
3.11 MAINTENANCE OF POLLUTION FACILITIES
3.12 TRAINING OF CONTRACTOR PERSONNEL
3.13 POST CONSTRUCTION CLEANUP

-- End of Section Table of Contents --

SECTION 01355

ENVIRONMENTAL PROTECTION
10/00

PART 1 GENERAL

1.1 REFERENCES

The publications listed below form a part of this specification to the extent referenced. The publications are referred to in the text by basic designation only.

CODE OF FEDERAL REGULATIONS (CFR)

33 CFR 328	Definitions
40 CFR 68	Chemical Accident Prevention Provisions
40 CFR 152 - 186	Pesticide Programs
40 CFR 261	Identification and Listing of Hazardous Waste
40 CFR 262	Standards Applicable to Generators of Hazardous Waste
40 CFR 279	Standards for the Management of Used Oil
40 CFR 302	Designation, Reportable Quantities, and Notification
40 CFR 355	Emergency Planning and Notification
49 CFR 171 - 178	Hazardous Materials Regulations

ENGINEERING MANUALS (EM)

EM 385-1-1	(1996) U.S. Army Corps on Engineers Safety and Health Requirements Manual

US ARMY CORPS OF ENGINEERS TECHNICAL REPORT

WETLAND MANUAL	Corps of Engineers Wetlands Delineation Manual Technical Report Y-87-1

1.2 DEFINITIONS

1.2.1 Environmental Pollution and Damage

Environmental pollution and damage is the presence of chemical, physical, or biological elements or agents which adversely affect human health or

welfare; unfavorably alter ecological balances of importance to human life; affect other species of importance to humankind; or degrade the environment aesthetically, culturally and/or historically.

1.2.2 Environmental Protection

Environmental protection is the prevention/control of pollution and habitat disruption that may occur to the environment during construction. The control of environmental pollution and damage requires consideration of land, water, and air; biological and cultural resources; and includes management of visual aesthetics; noise; solid, chemical, gaseous, and liquid waste; radiant energy and radioactive material as well as other pollutants.

1.2.3 Contractor Generated Hazardous Waste

Contractor generated hazardous waste means materials that, if abandoned or disposed of, may meet the definition of a hazardous waste. These waste streams would typically consist of material brought on site by the Contractor to execute work, but are not fully consumed during the course of construction. Examples include, but are not limited to, excess paint thinners (i.e. methyl ethyl ketone, toluene etc.), waste thinners,excess paints, excess solvents, waste solvents, and excess pesticides, and contaminated pesticide equipment rinse water.

1.2.4 Land Application for Discharge Water

The term "Land Application" for discharge water implies that the Contractor shall discharge water at a rate which allows the water to percolate into the soil. No sheeting action, soil erosion, discharge into storm sewers, discharge into defined drainage areas, or discharge into the "waters of the United States" shall occur. Land Application shall be in compliance with all applicable Federal, State, and local laws and regulations.

1.2.5 Pesticide

Pesticide is defined as any substance or mixture of substances intended for preventing, destroying, repelling, or mitigating any pest, or intended for use as a plant regulator, defoliant or desiccant.

1.2.6 Pests

The term "pests" means arthropods, birds, rodents, nematodes, fungi, bacteria, viruses, algae, snails, marine borers, snakes, weeds and other organisms (except for human or animal disease-causing organisms) that adversely affect readiness, military operations, or the well-being of personnel and animals; attack or damage real property, supplies, equipment, or vegetation; or are otherwise undesirable.

1.2.7 Surface Discharge

The term "Surface Discharge" implies that the water is discharged with possible sheeting action and subsequent soil erosion may occur. Waters that are surface discharged may terminate in drainage ditches, storm sewers,creeks, and/or "waters of the United States" and would require a permit to discharge water from the governing agency.

1.2.8 Waters of the United States

All waters which are under the jurisdiction of the Clean Water Act, as defined in 33 CFR 328.

1.2.9 Wetlands

Wetlands means those areas that are inundated or saturated by surface or ground water at a frequency and duration sufficient to support, and that under normal circumstances do support, a prevalence of vegetation typically adapted for life in saturated soil conditions. Wetlands generally include swamps, marshes, and bogs. Official determination of whether or not an area is classified as a wetland must be done in accordance with WETLAND MANUAL.

1.3 GENERAL REQUIREMENTS

The Contractor shall minimize environmental pollution and damage that may occur as the result of construction operations. The environmental resources within the project boundaries and those affected outside the limits of permanent work shall be protected during the entire duration of this contract. The Contractor shall comply with all applicable environmental Federal, State, and local laws and regulations. The Contractor shall be responsible for any delays resulting from failure to comply with environmental laws and regulations.

1.4 SUBCONTRACTORS

The Contractor shall ensure compliance with this section by subcontractors.

1.5 PAYMENT

No separate payment will be made for work covered under this section. The Contractor shall be responsible for payment of fees associated with environmental permits, application, and/or notices obtained by the Contractor. All costs associated with this section shall be included in the contract price. The Contractor shall be responsible for payment of all fines/fees for violation or non-compliance with Federal, State, Regional and local laws and regulations.

1.6 SUBMITTALS

Government approval is required for submittals with a "G" designation; submittals not having a "G" designation are for information only. When used, a designation following the "G" designation identifies the office that will review the submittal for the Government. The following shall be submitted in accordance with Section 01330 SUBMITTAL PROCEDURES:

SD-01 Preconstruction Submittals

Environmental Protection Plan; G-RE

The environmental protection plan.

1.7 ENVIRONMENTAL PROTECTION PLAN

Prior to commencing construction activities or delivery of materials to the site, the Contractor shall submit an Environmental Protection Plan for review and approval by the Contracting Officer. The purpose of the Environmental Protection Plan is to present a comprehensive overview of known or potential environmental issues which the Contractor must address

during construction. Issues of concern shall be defined within the Environmental Protection Plan as outlined in this section. The Contractor shall address each topic at a level of detail commensurate with the environmental issue and required construction task(s). Topics or issues which are not identified in this section, but which the Contractor considers necessary, shall be identified and discussed after those items formally identified in this section. Prior to submittal of the Environmental Protection Plan, the Contractor shall meet with the Contracting Officer for the purpose of discussing the implementation of the initial Environmental Protection Plan; possible subsequent additions and revisions to the plan including any reporting requirements; and methods for administration of the Contractor's Environmental Plans. The Contractor shall maintain a current version of the Environmental Protection Plan on site for review by interested parties.

1.7.1 Compliance

No requirement in this Section shall be construed as relieving the Contractor of any applicable Federal, State, and local environmental protection laws and regulations. During Construction, the Contractor shall be responsible for identifying, submitting for approval, and implementing any additional requirements to be included in the Environmental Protection Plan.

1.7.2 Contents

The environmental protection plan shall include, but shall not be limited to, the following:

a. Name(s) of person(s) within the Contractor's organization who is(are) responsible for ensuring adherence to the Environmental Protection Plan.

b. Name(s) and qualifications of person(s) responsible for manifesting hazardous waste to be removed from the site, if applicable.

c. Name(s) and qualifications of person(s) responsible for training the Contractor's environmental protection personnel.

d. Description of the Contractor's environmental protection personnel training program.

e. An erosion and sediment control plan which identifies the type and location of the erosion and sediment controls to be provided. The plan shall include monitoring and reporting requirements to assure that the control measures are in compliance with the erosion and sediment control plan, Federal, State, and local laws and regulations.

f. Drawings showing locations of proposed temporary excavations or embankments for haul roads, stream crossings, material storage areas, structures, sanitary facilities, and stockpiles of excess or spoil materials including methods to control runoff and to contain materials on the site.

g. Traffic control plans including measures to reduce erosion of temporary roadbeds by construction traffic, especially during wet weather. Plan shall include measures to minimize the amount of mud transported onto paved public roads by vehicles or runoff.

h. Work area plan showing the proposed activity in each portion of the area and identifying the areas of limited use or nonuse. Plan should include measures for marking the limits of use areas including methods for protection of features to be preserved within authorized work areas.

i. Drawing showing the location of borrow areas.

j. The Spill Control plan shall include the procedures, instructions, and reports to be used in the event of an unforeseen spill of a substance regulated by 40 CFR 68, 40 CFR 302, 40 CFR 355, and/or regulated under State or Local laws and regulations. The Spill Control Plan supplements the requirements of EM 385-1-1. This plan shall include as a minimum:

1. The name of the individual who will report any spills or hazardous substance releases and who will follow up with complete documentation. This individual shall immediately notify the Contracting Officer and the local Fire Department in addition to the legally required Federal, State, and local reporting channels (including the National Response Center 1-800-424-8802) if a reportable quantity is released to the environment. The plan shall contain a list of the required reporting channels and telephone numbers.

2. The name and qualifications of the individual who will be responsible for implementing and supervising the containment and cleanup.

3. Training requirements for Contractor's personnel and methods of accomplishing the training.

4. A list of materials and equipment to be immediately available at the job site, tailored to cleanup work of the potential hazard(s) identified.

5. The names and locations of suppliers of containment materials and locations of additional fuel oil recovery, cleanup, restoration, and material-placement equipment available in case of an unforeseen spill emergency.

6. The methods and procedures to be used for expeditious contaminant cleanup.

k. A non-hazardous solid waste disposal plan identifying methods and locations for solid waste disposal including clearing debris. The plan shall include schedules for disposal. The Contractor shall identify any subcontractors responsible for the transportation and disposal of solid waste. Licenses or permits shall be submitted for solid waste disposal sites that are not a commercial operating facility. Evidence of the disposal facility's acceptance of the solid waste shall be attached to this plan during the construction.

l. A recycling and solid waste minimization plan with a list of measures to reduce consumption of energy and natural resources. The plan shall detail the Contractor's actions to comply with and to participate in Federal, State, Regional, and local government sponsored recycling programs to reduce the volume of solid waste at the source.

m. An air pollution control plan detailing provisions to assure that

dust, debris, materials, trash, etc., do not become air borne and travel off the project site.

n. A contaminant prevention plan that: identifies potentially hazardous substances to be used on the job site; identifies the intended actions to prevent introduction of such materials into the air, water, or ground; and details provisions for compliance with Federal, State, and local laws and regulations for storage and handling of these materials. In accordance with EM 385-1-1, a copy of the Material Safety Data Sheets (MSDS) and the maximum quantity of each hazardous material to be on site at any given time shall be included in the contaminant prevention plan. As new hazardous materials are brought on site or removed from the site, the plan shall be updated.

o. A waste water management plan that identifies the methods and procedures for management and/or discharge of waste waters which are directly derived from construction activities, such as concrete curing water, clean-up water, dewatering of ground water, disinfection water, hydrostatic test water, and water used in flushing of lines.

p. A historical, archaeological, cultural, biological, and wetland resources plan that defines procedures for identifying and protecting the resources known to be on the project site and any resources discovered during construction. The plan shall identify lines of communication between Contractor personnel and the Contracting Officer.

q. A pesticide treatment plan shall be included and updated, as information becomes available. The plan shall include: sequence of treatment, dates, times, locations, pesticide trade name, EPA registration numbers, authorized uses, chemical composition, formulation, original and applied concentration, application rates of active ingredient (i.e. pounds of active ingredient applied), equipment used for application and calibration of equipment. The Contractor is responsible for Federal, State, Regional and Local pest management record keeping and reporting requirements.

1.7.3 Appendix

Copies of all Contractor's environmental permits, permit application packages, approvals to construct, notifications, certifications, reports, and termination documents shall be attached, as an appendix, to the Environmental Protection Plan.

1.8 PROTECTION FEATURES

This paragraph supplements the Contract Clause PROTECTION OF EXISTING VEGETATION, STRUCTURES, EQUIPMENT, UTILITIES, AND IMPROVEMENTS. Prior to start of any onsite construction activities, the Contractor and the Contracting Officer shall make a joint condition survey. Immediately following the survey, the Contractor shall prepare a brief report including a plan describing the features requiring protection under the provisions of the Contract Clauses, which are not specifically identified on the drawings as environmental features requiring protection along with the condition of trees, shrubs and grassed areas immediately adjacent to the site of work and adjacent to the Contractor's assigned storage area and access route(s), as applicable. This survey report shall be signed by both the the Contractor and the Contracting Officer upon mutual agreement as to its accuracy and completeness. The Contractor shall protect those environmental features included in the survey report and any indicated on

the drawings, regardless of interference which their preservation may cause to the Contractor's work under the contract.

1.9 ENVIRONMENTAL ASSESSMENT OF CONTRACT DEVIATIONS

Any deviations, requested by the Contractor, from the drawings,plans and specifications which may have an environmental impact will be subject to approval by the Contracting Officer and may require an extended review, processing, and approval time. The Contracting Officer reserves the right to disapprove alternate methods, even if they are more cost effective, if the Contracting Officer determines that the proposed alternate method will have an adverse environmental impact.

1.10 NOTIFICATION

The Contracting Officer will notify the Contractor in writing of any observed noncompliance with Federal, State or local environmental laws or regulations, permits, and other elements of the Contractor's Environmental Protection plan. The Contractor shall, after receipt of such notice, inform the Contracting Officer of the proposed corrective action and take such action when approved by the Contracting Officer. The Contracting Officer may issue an order stopping all or part of the work until satisfactory corrective action has been taken. No time extensions shall be granted or equitable adjustments allowed to the Contractor for any such suspensions. This is in addition to any other actions the Contracting Officer may take under the contract, or in accordance with the Federal Acquisition Regulation or Federal Law.

PART 2 PRODUCTS (NOT USED)

PART 3 EXECUTION

3.1 ENVIRONMENTAL PERMITS AND COMMITMENTS

This paragraph supplements the Contractor's responsibility under the contract clause "PERMITS AND RESPONSIBILITIES" to the extent that the Government will be responsible for the following environmental permits:

a. Clean Water Act Section 404 Permits for Dredged or Fill Material (Exempt)

b. Iowa Department of Natural Resources National Pollutant Discharge Elimination System (NPDES) General Permit No. 2 for Storm Water Discharge Associated with Industrial Activity for Construction Activities (Exempt/Waiver)

c. Floodplain Construction Permit

d. Sovereign Lands Construction Permits

The Contractor shall be responsible for obtaining and complying with all other environmental permits and commitments required by Federal, State, Regional, and local environmental laws and regulations.

3.2 LAND RESOURCES

The Contractor shall confine all activities to areas defined by the drawings and specifications. Prior to the beginning of any construction, the Contractor shall identify any land resources to be preserved within the

work area. Except in areas indicated on the drawings or specified to be cleared, the Contractor shall not remove, cut, deface, injure, or destroy land resources including trees, shrubs, vines, grasses, topsoil, and land forms without approval. No ropes, cables, or guys shall be fastened to or attached to any trees for anchorage unless specifically authorized. The Contractor shall provide effective protection for land and vegetation resources at all times as defined in the following subparagraphs. Stone, soil, or other materials displaced into uncleared areas shall be removed by the Contractor.

3.2.1 Work Area Limits

Prior to commencing construction activities, the Contractor shall mark the areas that need not be disturbed under this contract. Isolated areas within the general work area which are not to be disturbed shall be marked or fenced. Monuments and markers shall be protected before construction operations commence. Where construction operations are to be conducted during darkness, any markers shall be visible in the dark. The Contractor's personnel shall be knowledgeable of the purpose for marking and/or protecting particular objects.

3.2.2 Landscape

Trees, shrubs, vines, grasses, land forms and other landscape features indicated and defined on the drawings to be preserved shall be clearly identified by marking, fencing, or wrapping with boards, or any other approved techniques. The Contractor shall restore landscape features damaged or destroyed during construction operations outside the limits of the approved work area.

3.2.3 Erosion and Sediment Controls

The Contractor shall be responsible for providing erosion and sediment control measures in accordance with Federal, State, and local laws and regulations. The erosion and sediment controls selected and maintained by the Contractor shall be such that water quality standards are not violated as a result of the Contractor's construction activities. The area of bare soil exposed at any one time by construction operations should be kept to a minimum. The Contractor shall construct or install temporary and permanent erosion and sediment control best management practices (BMPs) as indicated on the drawings and specified in Section 01356 STORM WATER POLLUTION PREVENTION MEASURES. BMPs may include, but not be limited to, vegetation cover, stream bank stabilization, slope stabilization, silt fences, construction of terraces, interceptor channels, sediment traps, inlet and outfall protection, diversion channels, and sedimentation basins. Any temporary measures shall be removed after the area has been stabilized.

3.2.4 Contractor Facilities and Work Areas

The Contractor's field offices, staging areas, stockpile storage, and temporary buildings shall be placed in areas designated on the drawings or as directed by the Contracting Officer. Temporary movement or relocation of Contractor facilities shall be made only when approved. Erosion and sediment controls shall be provided for on-site borrow and spoil areas to prevent sediment from entering nearby waters. Temporary excavation and embankments for plant and/or work areas shall be controlled to protect adjacent areas.

3.3 WATER RESOURCES

The Contractor shall monitor construction activities to prevent pollution of surface and ground waters. Toxic or hazardous chemicals shall not be applied to soil or vegetation unless otherwise indicated. All water areas affected by construction activities shall be monitored by the Contractor. For construction activities immediately adjacent to impaired surface waters, the Contractor shall be capable of quantifying sediment or pollutant loading to that surface water when required by State or Federally issued Clean Water Act permits.

3.3.1 Cofferdams, Diversions, and Dewatering Operations

Construction operations for dewatering, removal of cofferdams, tailrace excavation, and tunnel closure shall be controlled at all times to maintain compliance with existing State water quality standards and designated uses of the surface water body. The Contractor shall comply with the State of Iowa water quality standards and anti-degradation provisions.

3.3.2 Stream/Channel Crossings

Stream/Channel crossings shall allow movement of materials or equipment without violating water pollution control standards of the Federal, State, and local governments.

3.3.3 Wetlands

The Contractor shall not enter, disturb, destroy, or allow discharge of contaminants into any wetlands except as authorized herein.

3.4 AIR RESOURCES

Equipment operation, activities, or processes performed by the Contractor shall be in accordance with all Federal and State air emission and performance laws and standards.

3.4.1 Particulates

Dust particles; aerosols and gaseous by-products from construction activities; and processing and preparation of materials, such as from asphaltic batch plants; shall be controlled at all times, including weekends, holidays and hours when work is not in progress. The Contractor shall maintain excavations, stockpiles, haul roads, permanent and temporary access roads, plant sites, spoil areas, borrow areas, and other work areas within or outside the project boundaries free from particulates which would cause the Federal, State, and local air pollution standards to be exceeded or which would cause a hazard or a nuisance. Sprinkling, chemical treatment of an approved type, baghouse, scrubbers, electrostatic precipitators or other methods will be permitted to control particulates in the work area. Sprinkling, to be efficient, must be repeated to keep the disturbed area damp at all times. The Contractor must have sufficient, competent equipment available to accomplish these tasks. Particulate control shall be performed as the work proceeds and whenever a particulate nuisance or hazard occurs. The Contractor shall comply with all State and local visibility regulations.

3.4.2 Odors

Odors from construction activities shall be controlled at all times. The odors shall not cause a health hazard and shall be in compliance with State

regulations and/or local ordinances.

3.4.3 Sound Intrusions

The Contractor shall keep construction activities under surveillance and control to minimize environment damage by noise. The Contractor shall comply with the provisions of the State rules.

3.4.4 Burning

Burning will not be allowed on the project site unless specified in other sections of the specifications or authorized in writing by the Contracting Officer. The specific time, location, and manner of burning shall be subject to approval.

3.5 MANAGEMENT AND DISPOSAL OF WASTE AND CHEMICAL MATERIALS

Management and disposal of wastes and chemical materials shall be as directed below, unless otherwise specified in other sections and/or shown on the drawings.

3.5.1 Solid Wastes

Solid wastes (excluding clearing debris) shall be placed in containers which are emptied on a regular schedule. Handling, storage, and disposal shall be conducted to prevent contamination. Segregation measures shall be employed so that no hazardous or toxic waste will become co-mingled with solid waste. The Contractor shall transport solid waste off Government property and dispose of it in compliance with Federal, State, and local requirements for solid waste disposal. A Subtitle D RCRA permitted landfill shall be the minimum acceptable off-site solid waste disposal option. The Contractor shall verify that the selected transporters and disposal facilities have the necessary permits and licenses to operate.

3.5.2 Chemicals and Chemical Wastes

Chemicals shall be dispensed ensuring no spillage to the ground or water. Periodic inspections of dispensing areas to identify leakage and initiate corrective action shall be performed and documented. This documentation will be periodically reviewed by the Government. Chemical waste shall be collected in corrosion resistant, compatible containers. Collection drums shall be monitored and removed to a staging or storage area when contents are within 6 inches of the top. Wastes shall be classified, managed, stored, and disposed of in accordance with Federal, State, and local laws and regulations.

3.5.3 Contractor Generated Hazardous Wastes/Excess Hazardous Materials

Hazardous wastes are defined in 40 CFR 261, or are as defined by applicable State and local regulations. Hazardous materials are defined in 49 CFR 171 - 178. The Contractor shall, at a minimum, manage and store hazardous waste in compliance with 40 CFR 262 . The Contractor shall take sufficient measures to prevent spillage of hazardous and toxic materials during dispensing. The Contractor shall segregate hazardous waste from other materials and wastes, shall protect it from the weather by placing it in a safe covered location, and shall take precautionary measures such as berming or other appropriate measures against accidental spillage. The Contractor shall be responsible for storage, describing, packaging, labeling, marking, and placarding of hazardous waste and hazardous material

in accordance with 49 CFR 171 - 178, State, and local laws and regulations. The Contractor shall transport Contractor generated hazardous waste off Government property within 60 days in accordance with the Environmental Protection Agency and the Department of Transportation laws and regulations. The Contractor shall dispose of hazardous waste in compliance with Federal, State and local laws and regulations. Spills of hazardous or toxic materials shall be immediately reported to the Contracting Officer. Cleanup and cleanup costs due to spills shall be the Contractor's responsibility. The disposition of Contractor generated hazardous waste and excess hazardous materials are the Contractor's responsibility.

3.5.4 Fuel and Lubricants

Storage, fueling and lubrication of equipment and motor vehicles shall be conducted in a manner that affords the maximum protection against spill and evaporation. Fuel, lubricants and oil shall be managed and stored in accordance with all Federal, State, Regional, and local laws and regulations. Used lubricants and used oil to be discarded shall be stored in marked corrosion-resistant containers and recycled or disposed in accordance with 40 CFR 279, State, and local laws and regulations. Storage of fuel on the project site shall be accordance with all Federal, State, and local laws and regulations.

3.5.5 Waste Water

Disposal of waste water shall be as specified below.

a. Waste water from construction activities, such as onsite material processing, concrete curing, foundation and concrete clean-up, water used in concrete trucks, forms, etc. shall not be allowed to enter water ways or to be discharged prior to being treated to remove pollutants. The Contractor shall dispose of the construction related waste water off-Government property in accordance with all Federal, State, Regional and Local laws and regulations.

b. For discharge of ground water, the Contractor shall land apply the water on the project site in accordance with all Federal, State, Regional, and/or Local laws and regulations; or shall surface discharge the water

3.6 RECYCLING AND WASTE MINIMIZATION

The Contractor shall participate in State and local government sponsored recycling programs. The Contractor is further encouraged to minimize solid waste generation throughout the duration of the project. .

3.7 HISTORICAL, ARCHAEOLOGICAL, AND CULTURAL RESOURCES

If during excavation or other construction activities any previously unidentified or unanticipated historical, archaeological, and cultural resources are discovered or found, all activities that may damage or alter such resources shall be temporarily suspended. Resources covered by this paragraph include but are not limited to: any human skeletal remains or burials; artifacts; shell, midden, bone, charcoal, or other deposits; rock or coral alignments, pavings, wall, or other constructed features; and any indication of agricultural or other human activities. Upon such discovery

or find, the Contractor shall immediately notify the Contracting Officer so that the appropriate authorities may be notified and a determination made as to their significance and what, if any, special disposition of the finds should be made. The Contractor shall cease all activities that may result in impact to or the destruction of these resources. The Contractor shall secure the area and prevent Contractor personnel or other persons from trespassing on, removing, or otherwise disturbing such resources.

3.8 BIOLOGICAL RESOURCES

The Contractor shall minimize interference with, disturbance to, and damage to fish, wildlife, and plants including their habitat. The Contractor shall be responsible for the protection of threatened and endangered animal and plant species including their habitat in accordance with Federal, State, Regional, and local laws and regulations.

3.9 INTEGRATED PEST MANAGEMENT

In order to minimize impacts to existing fauna and flora, the Contractor, shall coordinate with the Contracting Officer) at the earliest possible time prior to pesticide application. The Contractor shall discuss integrated pest management strategies with the and receive concurrence prior to the application of any pesticide associated with these specifications. The use and management of pesticides are regulated under 40 CFR 152 - 186.

3.9.1 Pesticide Delivery and Storage

Pesticides shall be delivered to the site in the original, unopened containers bearing legible labels indicating the EPA registration number and the manufacturer's registered uses. Pesticides shall be stored according to manufacturer's instructions and under lock and key when unattended.

3.9.2 Qualifications

For the application of pesticides, the Contractor shall use the services of a subcontractor whose principal business is pest control. The subcontractor shall be licensed and certified in the state where the work is to be performed.

3.9.3 Pesticide Handling Requirements

The Contractor shall formulate, treat with, and dispose of pesticides and associated containers in accordance with label directions and shall use the clothing and personal protective equipment specified on the labeling for use during all phases of the application. Material Safety Data Sheets (MSDS)shall be available for all pesticide products.

3.9.4 Application

Pesticides shall be applied by a State Certified Pesticide Applicator in accordance with EPA label restrictions and recommendation. The Certified Applicator shall wear clothing and personal protective equipment as specified on the pesticide label. Water used for formulating shall only come from locations designated by the Contracting Officer. The Contractor shall not allow the equipment to overflow. Prior to application of pesticide, all equipment shall be inspected for leaks, clogging, wear, or damage and shall be repaired prior to being used.

3.10 PREVIOUSLY USED EQUIPMENT

The Contractor shall clean all previously used construction equipment prior to bringing it onto the project site. The Contractor shall ensure that the equipment is free from soil residuals, egg deposits from plant pests, noxious weeds, and plant seeds. The Contractor shall consult with the USDA jurisdictional office for additional cleaning requirements.

3.11 MAINTENANCE OF POLLUTION FACILITIES

The Contractor shall maintain permanent and temporary pollution control facilities and devices for the duration of the contract or for that length of time construction activities create the particular pollutant.

3.12 TRAINING OF CONTRACTOR PERSONNEL

The Contractor's personnel shall be trained in all phases of environmental protection and pollution control. The Contractor shall conduct environmental protection/pollution control meetings for all Contractor personnel prior to commencing construction activities. Additional meetings shall be conducted for new personnel and when site conditions change. The training and meeting agenda shall include: methods of detecting and avoiding pollution; familiarization with statutory and contractual pollution standards; installation and care of devices, vegetative covers, and instruments required for monitoring purposes to ensure adequate and continuous environmental protection/pollution control; anticipated hazardous or toxic chemicals or wastes, and other regulated contaminants; recognition and protection of archaeological sites, artifacts, wetlands, and endangered species and their habitat that are known to be in the area.

3.13 POST CONSTRUCTION CLEANUP

The Contractor shall clean up all areas used for construction in accordance with Contract Clause: "Cleaning Up". The Contractor shall, unless otherwise instructed in writing by the Contracting Officer, obliterate all signs of temporary construction facilities such as haul roads, work area, structures, foundations of temporary structures, stockpiles of excess or waste materials, and other vestiges of construction prior to final acceptance of the work. The disturbed area shall be graded, filled and the entire area seeded unless otherwise indicated.

-- End of Section --

SECTION TABLE OF CONTENTS

DIVISION 01 - GENERAL REQUIREMENTS

SECTION 01356

STORM WATER POLLUTION PREVENTION MEASURES

05/00

PART 1 GENERAL

1.1 REFERENCES
1.2 GENERAL
1.3 SUBMITTALS
1.4 EROSION AND SEDIMENT CONTROLS
1.4.1 Stabilization Practices
1.4.1.1 Unsuitable Conditions
1.4.1.2 No Activity for Less Than 21 Days
1.4.2 Structural Practices
1.4.2.1 Silt Fences
1.4.2.2 Straw Bales
1.4.2.3 Diversion Dikes

PART 2 PRODUCTS

2.1 COMPONENTS FOR SILT FENCES
2.1.1 Filter Fabric
2.1.2 Silt Fence Stakes and Posts
2.1.3 Mill Certificate or Affidavit
2.1.4 Identification Storage and Handling
2.1.5 Support Mesh
2.2 COMPONENTS FOR STRAW BALES
2.3 Erosion Control Blankets
2.4 COMPONENTS FOR SEDIMENT TRAP
2.5 COMPONENTS FOR INLET PROTECTION
2.6 STONE CONSTRUCTION ENTRANCE
2.7 GEOTEXTILES

PART 3 EXECUTION

3.1 INSTALLATION OF SILT FENCES
3.2 INSTALLATION OF STRAW BALES
3.3 Sediment Trap
3.4 Stone Construction Entrance
3.5 MAINTENANCE
3.5.1 Silt Fence Maintenance
3.5.2 Straw Bale Maintenance
3.5.3 Diversion Dike Maintenance
3.6 INSPECTIONS
3.6.1 General
3.6.2 Inspections Details
3.6.3 Inspection Reports

-- End of Section Table of Contents --

SECTION 01356

STORM WATER POLLUTION PREVENTION MEASURES
05/00

PART 1 GENERAL

1.1 REFERENCES

The publications listed below form a part of this specification to the extent referenced. The publications are referred to in the text by basic designation only.

AMERICAN SOCIETY FOR TESTING AND MATERIALS (ASTM)

ASTM D 448	(1998) Sizes of Aggregate for Road and Bridge Construction
ASTM D 4355	(1992) Deterioration of Geotextiles from Exposure to Ultraviolet Light and Water (Xenon-Arc Type Apparatus)
ASTM D 4439	(1997) Standard Terminology for Geosynthetics
ASTM D 4491	(1996) Water Permeability of Geotextiles by Permittivity
ASTM D 4533	(1991; R 1996) Trapezoid Tearing Strength of Geotextiles
ASTM D 4632	(1991; R 1996)) Grab Breaking Load and Elongation of Geotextiles
ASTM D 4751	(1995) Determining Apparent Opening Size of a Geotextile
ASTM D 4833	(1988; R 1996) Index Puncture Resistance of Geotextiles, Geomembranes, and Related Products
ASTM D 4873	(1995) Identification, Storage, and Handling of Geosynthetic Rolls

1.2 GENERAL

The Contractor shall implement the storm water pollution prevention measures specified in this section in a manner which will meet the requirements of Section 01355 ENVIRONMENTAL PROTECTION.

1.3 SUBMITTALS

Government approval is required for all submittals with a "G" designation; submittals not having an "G" designation are for information only. When used, a designation following the "G" designation identifies the office that will review the submittal for the Government. The following shall be submitted in accordance with Section 01330 SUBMITTAL PROCEDURES:

SD-01 Preconstruction Submittals

Contractor's Storm Water Pollution Preventation Plan (SWPPP); G-RE.

SWPPP shall describe interim stablization practices, including site-specific scheduling of the implementation of the practices. The plan should ensure that existing vegetation is preserved where attainable and disturbed areas are stabilized. The plan shall describe structural practices to divert flows from exposed soils, store flow, or otherwise limit runoff and discharge of pollutants from exposed areas of the site to the degree attainable.

SD-07 Certificates

Mill Certificate or Affidavit.

1.4 EROSION AND SEDIMENT CONTROLS

The controls and measures required by the Contractor are described below.

1.4.1 Stabilization Practices

The stabilization practices to be implemented shall include temporary seeding mulching, geotextiles, sod stabilization, vegetative buffer strips, erosion control matts, protection of trees, preservation of mature vegetation, etc. On his daily CQC Report, the Contractor shall record the dates when the major grading activities occur, (e.g., clearing and grubbing, excavation, embankment, and grading); when construction activities temporarily or permanently cease on a portion of the site; and when stabilization practices are initiated. Except as provided in paragraphs UNSUITABLE CONDITIONS and NO ACTIVITY FOR LESS THAN 21 DAYS, stabilization practices shall be initiated as soon as practicable, but no more than 14 days, in any portion of the site where construction activities have temporarily or permanently ceased.

1.4.1.1 Unsuitable Conditions

Where the initiation of stabilization measures by the fourteenth day after construction activity temporarily or permanently ceases is precluded by unsuitable conditions caused by the weather, stabilization practices shall be initiated as soon as practicable after conditions become suitable.

1.4.1.2 No Activity for Less Than 21 Days

Where construction activity will resume on a portion of the site within 21 days from when activities ceased (e.g., the total time period that construction activity is temporarily ceased is less than 21 days), then stabilization practices do not have to be initiated on that portion of the site by the fourteenth day after construction activity temporarily ceased.

1.4.2 Structural Practices

Structural practices shall be implemented to divert flows from exposed soils, temporarily store flows, or otherwise limit runoff and the discharge of pollutants from exposed areas of the site. Structural practices shall be implemented in a timely manner during the construction process to minimize erosion and sediment runoff. Structural practices shall include the following devices. Details of installation and construction are shown

on drawing C8.11 EROSION CONTROL DETAILS.

1.4.2.1 Silt Fences

The Contractor shall provide silt fences as a temporary structural practice to minimize erosion and sediment runoff. Silt fences shall be properly installed to effectively retain sediment immediately after completing each phase of work where erosion would occur in the form of sheet and rill erosion (e.g. clearing and grubbing, excavation, embankment, and grading). Silt fences shall be installed in the locations indicated on the drawings. Final removal of silt fence barriers shall be upon approval by the Contracting Officer.

1.4.2.2 Straw Bales

The Contractor shall provide bales of straw as a temporary structural practice to minimize erosion and sediment runoff. Bales shall be properly placed to effectively retain sediment immediately after completing each phase of work (e.g., clearing and grubbing, excavation, embankment, and grading) in each independent runoff area (e.g., after clearing and grubbing in a area between a ridge and drain, bales shall be placed as work progresses, bales shall be removed/replaced/relocated as needed for work to progress in the drainage area). Areas where straw bales are to be used are shown on the drawings. Final removal of straw bale barriers shall be upon approval by the Contracting Officer. Rows of bales of straw shall be provided as follows:

a. Along the downhill perimeter edge of all areas disturbed.

b. Along the top of the slope or top bank of drainage ditches, channels, swales, etc. that traverse disturbed areas.

c. Along the toe of all cut slopes and fill slopes of the construction areas.

d. Perpendicular to the flow in the bottom of existing drainage ditches, channels, swales, etc. that traverse disturbed areas or carry runoff from disturbed areas. Rows shall be spaced as approved by the Contracting Officer.

e. Perpendicular to the flow in the bottom of new drainage ditches, channels, and swales. Rows shall be spaced as approved by the Contracting Officer.

f. At the entrance to culverts that receive runoff from disturbed areas.

1.4.2.3 Diversion Dikes

Diversion dikes shall have a maximum channel slope of 2 percent and shall be adequately compacted to prevent failure. The minimum height measured from the top of the dike to the bottom of the channel shall be 18 inches. The minimum base width shall be 6 feet and the minimum top width shall be 2 feet. The Contractor shall ensure that the diversion dikes are not damaged by construction operations or traffic.

PART 2 PRODUCTS

2.1 COMPONENTS FOR SILT FENCES

2.1.1 Filter Fabric

The geotextile shall comply with the requirements of ASTM D 4439, and shall consist of polymeric filaments which are formed into a stable network such that filaments retain their relative positions. The filament shall consist of a long-chain synthetic polymer composed of at least 85 percent by weight of ester, propylene, or amide, and shall contain stabilizers and/or inhibitors added to the base plastic to make the filaments resistance to deterioration due to ultraviolet and heat exposure. Synthetic filter fabric shall contain ultraviolet ray inhibitors and stabilizers to provide a minimum of six months of expected usable construction life at a temperature range of 0 to 120 degrees F. The filter fabric shall meet the following requirements:

FILTER FABRIC FOR SILT SCREEN FENCE

PHYSICAL PROPERTY	TEST PROCEDURE	STRENGTH REQUIREMENT
Grab Tensile	ASTM D 4632	100 lbs. min.
Elongation (%)		30 % max.
Trapezoid Tear	ASTM D 4533	55 lbs. min.
Permittivity	ASTM D 4491	0.2 sec-1
AOS (U.S. Std Sieve)	ASTM D 4751	20-100

2.1.2 Silt Fence Stakes and Posts

The Contractor may use either wooden stakes or steel posts for fence construction. Wooden stakes utilized for silt fence construction, shall have a minimum cross section of 2 inches by 2 inches when oak is used and 4 inches by 4 inches when pine is used, and shall have a minimum length of 3 feet. Steel posts (standard "U" or "T" section) utilized for silt fence construction, shall have a minimum weight of 1.33 pounds per linear foot and a minimum length of 5 feet.

2.1.3 Mill Certificate or Affidavit

A mill certificate or affidavit shall be provided attesting that the fabric and factory seams meet chemical, physical, and manufacturing requirements specified above. The mill certificate or affidavit shall specify the actual Minimum Average Roll Values and shall identify the fabric supplied by roll identification numbers. The Contractor shall submit a mill certificate or affidavit signed by a legally authorized official from the company manufacturing the filter fabric.

2.1.4 Identification Storage and Handling

Filter fabric shall be identified, stored and handled in accordance with ASTM D 4873.

2.1.5 Support Mesh

Support mesh shall be 14-1/2 gage or heavier steel wire with a mesh spacing of 6 by 6 inch or a prefabricated polymeric mesh of equivalent strength.

2.2 COMPONENTS FOR STRAW BALES

The straw in the bales shall be stalks from oats, wheat, rye, barley, rice, or from grasses such as byhalia, bermuda, etc., furnished in air dry condition. The bales shall have a standard cross section of 14 inches by 18 inches. All bales shall be either wire-bound or string-tied. The Contractor may use either wooden stakes or steel posts to secure the straw bales to the ground. Wooden stakes utilized for this purpose, shall have a minimum dimensions of 2 inches by 2 inches in cross section and shall have a minimum length of 3 feet. Steel posts (standard "U" or "T" section) utilized for securing straw bales, shall have a minimum weight of 1.33 pounds per linear foot and a minimum length of 3 feet.

2.3 Erosion Control Blankets

Erosion control blankets shall be a machine-produced mat with a biodegradable agricultural straw matrix (approximately 0.50 lb/sq yd) and photodegradable netting on each side. The blanket shall be sewn together with degradable thread. Installation staple patterns shall be clearly marked on the erosion control blanket with environmentally safe paint.

2.4 COMPONENTS FOR SEDIMENT TRAP

Coarse aggregate shall conform to ASTM D 448, Size 3, 357, or 5. Minor variations from the gradations specified will be permitted. Stone for riprap shall consist of field stone or rough unhewn quarry stone of approximately rectangular shape. The stone shall be hard and angular and of such quality that it will not disintegrate on exposure to water or weathering. The specific gravity of individual stones shall be at least 2.5. Riprap stones shall weigh between 50 and 150 pounds each, except that approximately 10 percent may weigh 50 pounds or less. At least 60 percent shall weight more than 100 pounds. Geotextile shall conform to paragraph GEOTEXTILES.

2.5 COMPONENTS FOR INLET PROTECTION

Aggregates for gravel filter should be sized to get the greatest amount of filtering action possible (by using smaller-sized stone), while not creating significant ponding problems.

2.6 STONE CONSTRUCTION ENTRANCE

Aggregate for construction entrance shall conform to ASTM D 448, Size 1. Minor variations from the gradation specified will be permitted. Geotextile shall conform to paragraph GEOTEXTILES.

2.7 GEOTEXTILES

Geotextile for other than silt fence shall conform to the following requirements. Geotextile shall be a nonwoven pervious sheet of polymeric material and shall consist of long-chain synthetic polymers composed of at least 95 percent by weight polyolefins, polyesters, or polyamides. The use of woven slit film geotextiles (i.e. geotextiles made from yarns of a flat, tape-like character) will not be allowed. Stabilizers and/or inhibitors shall be added to the base polymer, as needed, to make the filaments resistant to deterioration by ultraviolet light, oxidation, and heat exposure. Regrind material, which consists of edge trimmings and other scraps that have never reached the consumer, may be used to produce the geotextile. Post-consumer recycled material may also be used. Geotextile

shall be formed into a network such that the filaments or yarns retain dimensional stability relative to each other, including the selvages. Geotextiles shall meet the requirements specified below. Where applicable, property values represent minimum average roll values (MARV) in the weakest principal direction. Values for AOS represent maximum average roll values.

GEOTEXTILE PHYSICAL PROPERTIES

PROPERTY	TEST VALUE	TEST METHOD
Elongation at Break, percent	Greater Than 50	ASTM D 4632
Apparent Opening Size (U.S. Sieve)	70	ASTM D 4751
Puncture, lbs.	55	ASTM D 4833
Grab Tensile, lbs.	160	ASTM D 4632
Trapezoidal Tear, lbs.	55	ASTM D 4533
Ultraviolet Stability (percent strength retained at 500 hours)	50	ASTM D 4355

PART 3 EXECUTION

3.1 INSTALLATION OF SILT FENCES

Silt fences shall extend a minimum of 16 inches above the ground surface and shall not exceed 34 inches above the ground surface. Filter fabric shall be from a continuous roll cut to the length of the barrier to avoid the use of joints. When joints are unavoidable, filter fabric shall be spliced together at a support post, with a minimum 6 inch overlap, and securely sealed. A trench shall be excavated approximately 6 inches wide and 8 inches deep on the upslope side of the location of the silt fence. The 6-inch by 8-inch trench shall be backfilled and the soil compacted over the filter fabric. Silt fences shall be removed upon approval by the Contracting Officer.

3.2 INSTALLATION OF STRAW BALES

Straw bales shall be placed in a single row, lengthwise on the contour, with ends of adjacent bales tightly abutting one another. Straw bales shall be installed so that bindings are oriented around the sides rather than along the tops and bottoms of the bales in order to prevent deterioration of the bindings. The barrier shall be entrenched and backfilled. A trench shall be excavated the width of a bale and the length of the proposed barrier to a minimum depth of 4 inches. After the bales are staked and chinked (gaps filled by wedging with straw), the excavated soil shall be backfilled against the barrier. Backfill soil shall conform to the ground level on the downhill side and shall be built up to 4 inches against the uphill side of the barrier. Loose straw shall be scattered over the area immediately uphill from a straw bale barrier to increase

barrier efficiency. Each bale shall be securely anchored by at least two stakes driven through the bale. The first stake or steel post in each bale shall be driven toward the previously laid bale to force the bales together. Stakes or steel pickets shall be driven a minimum 18 inches deep into the ground to securely anchor the bales.

3.3 Sediment Trap

The area under the embankment shall be cleared, grubbed, and stripped of any vegetation and root mat. Fill material for the embankment shall be placed in accordance with Section 02212 COMPACTED EMBANKMENT. A geotextile shall be placed between the riprap and subgrade.

3.4 Stone Construction Entrance

The area of the entrance shall be cleared of all vegatation, roots, and other objectionable material. A minimum of 3 inches of aggregate shall be placed in a cut section to provide stability and secure the geotextile. The geotextile shall be placed beneath coarse aggregate for the full width and length of the entrance.

3.5 MAINTENANCE

The Contractor shall maintain the temporary and permanent vegetation, erosion and sediment control measures, and other protective measures in good and effective operating condition by performing routine inspections to determine condition and effectiveness, by restoration of destroyed vegetative cover, and by repair of erosion and sediment control measures and other protective measures. The following procedures shall be followed to maintain the protective measures.

3.5.1 Silt Fence Maintenance

Silt fences shall be inspected in accordance with paragraph INSPECTIONS. Any required repairs shall be made promptly. Close attention shall be paid to the repair of damaged silt fence resulting from end runs and undercutting. Should the fabric on a silt fence decompose or become ineffective, and the barrier is still necessary, the fabric shall be replaced promptly. Sediment deposits shall be removed when deposits reach one-third of the height of the barrier. When a silt fence is no longer required, it shall be removed. The immediate area occupied by the fence and any sediment deposits shall be shaped to an acceptable grade. The areas disturbed by this shaping shall be seeded in accordance with Section 02921 SEEDING.

3.5.2 Straw Bale Maintenance

Straw bale barriers shall be inspected in accordance with paragraph INSPECTIONS. Close attention shall be paid to the repair of damaged bales, end runs and undercutting beneath bales. Necessary repairs to barriers or replacement of bales shall be accomplished promptly. Sediment deposits shall be removed when deposits reach one-half of the height of the barrier. Bale rows used to retain sediment shall be turned uphill at each end of each row. When a straw bale barrier is no longer required, it shall be removed. The immediate area occupied by the bales and any sediment deposits shall be shaped to an acceptable grade. The areas disturbed by this shaping shall be seeded in accordance with Section 02921 SEEDING.

3.5.3 Diversion Dike Maintenance

Diversion dikes shall be inspected in accordance with paragraph INSPECTIONS. Close attention shall be paid to the repair of damaged diversion dikes and necessary repairs shall be accomplished promptly. When diversion dikes are no longer required, they shall be shaped to an acceptable grade. The areas disturbed by this shaping shall be seeded in accordance with Section 02921 SEEDING.

3.6 INSPECTIONS

3.6.1 General

The Contractor shall inspect disturbed areas of the construction site, areas used for storage of materials that are exposed to precipitation that have not been finally stabilized, stabilization practices, structural practices, other controls, and area where vehicles exit the site at least once every seven (7) calendar days and within 24 hours of the end of any storm that produces 0.5 inches or more rainfall at the site. Where sites have been finally stabilized, such inspection shall be conducted at least once every month.

3.6.2 Inspections Details

Disturbed areas and areas used for material storage that are exposed to precipitation shall be inspected for evidence of, or the potential for, pollutants entering the drainage system. Erosion and sediment control measures identified in the Storm Water Pollution Prevention Plan shall be observed to ensure that they are operating correctly. Discharge locations or points shall be inspected to ascertain whether erosion control measures are effective in preventing significant impacts to receiving waters. Locations where vehicles exit the site shall be inspected for evidence of offsite sediment tracking.

3.6.3 Inspection Reports

For each inspection conducted, the Contractor shall prepare a report summarizing the scope of the inspection, name(s) and qualifications of personnel making the inspection, the date(s) of the inspection, major observations relating to the implementation of the Storm Water Pollution Prevention Plan, maintenance performed, and actions taken. The report shall be furnished to the Contracting Officer within 24 hours of the inspection as a part of the Contractor's daily CQC REPORT. A copy of the inspection report shall be maintained on the job site.

-- End of Section --

SECTION TABLE OF CONTENTS

DIVISION 01 - GENERAL REQUIREMENTS

SECTION 01400

SPECIAL SAFETY REQUIREMENTS FOR DEMOLITION AND RENOVATION

05/00 Rev 10/00

PART 1 GENERAL

1.1 REFERENCES
1.2 SUMMARY
1.2.1 General
1.2.2 Description of Work
1.3 PRECONSTRUCTION CONFERENCE
1.4 SUBMITTALS
1.5 ACCIDENT PREVENTION PLAN
1.5.1 Requirements
1.5.1.1 Responsible Individual(s)
1.5.1.2 Subcontractor Supervision
1.5.1.3 Indoctrination of New Employees
1.5.1.4 Tool Box Safety Meetings
1.5.1.5 Fire Prevention and Protection
1.5.1.6 Housekeeping
1.5.1.7 Mechanical Equipment Inspection
1.5.1.8 First Aid and Medical Facilities
1.5.1.9 Sanitation
1.5.1.10 Safety Promotions
1.5.1.11 Accident Reporting
1.5.1.12 Job Hazard Analysis
1.6 ASBESTOS AND LEAD PAINT
1.6.1 Safety Plans
1.6.2 Safety and Health Oversight
1.6.3 Qualifications
1.6.3.1 Competent Person
1.6.3.2 Testing Laboratory
1.6.4 Exposure Assessment
1.6.4.1 Asbestos
1.6.4.2 Lead Paint
1.6.5 Employee Protection
1.6.5.1 Respiratory Protection Program
1.6.5.2 Protective Equipment
1.6.5.3 Decontamination Areas
1.6.5.4 Lead Paint
1.6.6 Employee Protection
1.6.6.1 Respiratory Protection Program
1.6.6.2 Protective Equipment
1.6.6.3 Decontamination Areas
1.6.6.4 Handwashing Facilities
1.6.6.5 Medical Surveillance
1.6.6.6 Training
1.6.7 Engineering Controls

PART 2 PRODUCTS (NOT APPLICABLE)

PART 3 EXECUTION (NOT APPLICABLE)

-- End of Section Table of Contents --

SECTION 01400

SPECIAL SAFETY REQUIREMENTS FOR DEMOLITION AND RENOVATION
05/00 Rev 10/00

PART 1 GENERAL

1.1 REFERENCES

The publications listed below form a part of this specification to the extent referenced. The publications are referred to in the text by basic designation only.

CODE OF FEDERAL REGULATIONS (CFR)

29 CFR 1910	Occupational Safety and Health Standards
29 CFR 1926	Safety and Health Regulations for Construction
40 CFR 763	Asbestos

1.2 SUMMARY

1.2.1 General

This section provides guidelines for preparation of accident prevention plans, and to implement the accident prevention clause (this specification) and EM 385-1-1, Safety and Health Requirements Manual. This section also includes guidelines for demolition of structures that contain nonfriable (i.e. NESHAP Category I) asbestos or lead-based paint, and that are to be demolished with these materials in place. The U.S. Army Corps of Engineers Safety and Health Requirements Manual, EM 385-1-1 is available from U.S. Government bookstores operated by the Government Printing Office. U.S. Government bookstores are located in most major cities including Milwaukee, Chicago, Kansas City, Denver, and Pueblo, Colorado.

1.2.2 Description of Work

Demolish structures as indicated on drawings. Asbestos has been identified in numerous locations as described in SECTIONS 02220 - DEMOLITION and 13280 - ASBESTOS ABATEMENT.

1.3 PRECONSTRUCTION CONFERENCE

A preconstruction conference will be scheduled prior to beginning of site work at which time representatives of the Contracting Officer will review and discuss requirements relative to planning and administration of the overall safety program.

1.4 SUBMITTALS

Government approval is required for submittals with a "G" designation;

submittals not having a "G" designation are for information only. When used, a designation following the "G" designation identifies the office that will review the submittal for the Government. The following shall be submitted in accordance with Section 01330SUBMITTAL PROCEDURES:

SD-01 Preconstruction Submittals

Accident Prevention Plan; G-A

The written site-specific Accident Prevention Plan including sections for lead and asbestos.

Respiratory Protection Program; G-A.

Records of the respirator program.

SD-06 Test Reports

Exposure Assessment and Air Monitoring; G-A.

Initial exposure assessments, negative exposure assessments, air-monitoring results and documentation.

SD-07 Certificates

Qualifications; G-A.

A written report providing evidence of qualifications for personnel, facilities and equipment assigned to the work. .

a. Current AHERA Accreditation certificates, per AHERA Regulation 40 CFR 763, Appendix C to Subpart E, for each worker or supervisor; Current State and Local supervisor and worker accreditation certificates.

b. Laboratory Qualifications and Certificates

Training Program; FIO.

A copy of the written project site-specific training material as indicated in 29 CFR 1926, Section .1101 that will be used to train onsite employees. The training document shall be signed by the Contractor's Competent Person.

Medical Requirements.

Physician's written opinion.

1.5 ACCIDENT PREVENTION PLAN

The Contractor shall submit, prior to the start of on site construction activity, a proposed accident prevention plan which shall be the accident prevention policy to be followed by all of the Contractor's and subcontractor's personnel and supervisory staff during performance of the work.

1.5.1 Requirements

The proposed plan shall be developed after a careful analysis of the work involved and shall be tailored specifically to the conditions of this

project and shall include, as separate sections, a lead safety plan and an asbestos safety plan as described in Paragraph: Safety Plans. The Contractor's accident prevention plan shall also contain, as a minimum, the following general information or procedures for the activity indicated. The Contractor shall submit his plan for review and acceptance prior to commencing work.

1.5.1.1 Responsible Individual(s)

The Contractor shall designate an onsite employee as the individual responsible for insuring the accident prevention plan is implemented and enforced.

1.5.1.2 Subcontractor Supervision

Explain procedures to assure that subcontractor(s) fully comply with the accident prevention plan.

1.5.1.3 Indoctrination of New Employees

The plan shall include provisions for advising workers of the purpose of the accident prevention plan, specific hazards on the job and precautions to be taken, emergency procedures, information concerning tool box safety meetings, required protective equipment, cleanup rules and location of company safety rules (posting or handout).

1.5.1.4 Tool Box Safety Meetings

Hold weekly "Tool Box" safety meetings. Timely safety subjects shall be determined by a responsible individual. Employees will be informed of time, location, who will conduct, and subject. Identify procedures for including subcontractors. The Contractor shall provide a copy of the Weekly Tool Box Meeting and Monthly Supervisor's Safety Meeting to the Contracting Officer.

1.5.1.5 Fire Prevention and Protection

Identify source of fire protection. Insure adequate fire extinguishers, water barrels, or other fire-fighting equipment is located on site. Explain prevention activities to include storage areas and special hazards such as welding and use of flammable liquids, and other special hazards.

1.5.1.6 Housekeeping

Daily cleanup of all debris and waste materials is required. Adequate disposal containers should be placed strategically around the site. Debris shall be removed on a regular basis. Explain procedures that include use of barrels, dumpsters, trash chutes, etc.

1.5.1.7 Mechanical Equipment Inspection

All mechanical equipment (trucks, cranes, forklifts, backhoes, graders, etc.) shall be inspected prior to use and at fixed intervals throughout the life of the contract. Explain how inspections will be accomplished (frequency, by whom, and records to be kept).

1.5.1.8 First Aid and Medical Facilities

First aid facilities shall be made available on the job site. Arrangements

for emergency medical attention shall be made prior to start of work. All emergency numbers (doctor, hospital, ambulance, fire department) shall be posted at the project superintendent's office.

1.5.1.9 Sanitation

Include provisions for toilet facilities, drinking water and washing facilities. A sufficient number of toilet facilities as specified in EM 385-1-1 shall be provided unless permission is granted to use existing facilities (portable chemical are authorized). Insure safe drinking water and individual cups are available. For the projects where corrosive or toxic materials are used, separate washing facilities are required.

1.5.1.10 Safety Promotions

The Contractor shall promote accident prevention. Identify method (posters, awards etc.).

1.5.1.11 Accident Reporting

All accidents (employee injuries, vehicle, building, or equipment damage etc.) regardless of their severity, shall be reported to the onsite government representative or to the area engineer, who in turn will advise the Contractor of forms to be submitted and timeframes.

1.5.1.12 Job Hazard Analysis

When job situations change and it is necessary to alter safety requirements, a Job Hazard Analysis will be accomplished, documented, and added as an addendum to the Accident Prevention Plan. Each Job Hazard Analysis shall include, but not be limited to, a description of the work, probable hazards related to that work and positive precautionary measures to be taken to reduce or eliminate each hazard. An example of changing situations may be new subcontractors performing work such as earth moving, trenching, concrete work, roofing, electrical, masonry etc. The onsite government representative will determine the format and amount of detail required of the written plan.

1.6 ASBESTOS AND LEAD PAINT

1.6.1 Safety Plans

The accident prevention plan shall contain distinct sections entitled Lead Safety Plan and Asbestos Safety Plan. Each section will address the following topics: qualifications of the competent person, laboratory qualifications, personal air monitoring, exposure assessment, work practices for specific Class II asbestos activities, engineering controls to reduce exposure, personal protection equipment, respiratory protection program, hygiene facilities and practices, medical surveillance, employee training, housekeeping, and waste containerization, labeling and disposal,

1.6.2 Safety and Health Oversight

Work which may expose personnel to asbestos and lead paint shall be supervised by a Competent Person as defined in 29 CFR 1926.1101 and 29 CFR 1926.62 and as required in paragraph: Qualifications of this section. The Competent Person shall be able to identify existing and predictable asbestos and lead paint hazards and shall have the authority to take corrective measures to eliminate them. Personal air monitoring shall be

overseen by the Competent Person.

1.6.3 Qualifications

1.6.3.1 Competent Person

a. Asbestos

The Contractor's full-time onsite Competent Person shall meet the competent person requirements of 29 CFR 1926 Section .1101 and shall have completed the EPA Model Accreditation Plan (MAP) "Contractor/Supervisor" training accreditation required by 40 CFR 763, Subpart E, Appendix C. The Competent Person shall be experienced in the administration and supervision of asbestos abatement projects, including exposure assessment and monitoring, work practices, protective measures for personnel, setting up and inspecting asbestos abatement work areas, ACM generated waste containment and disposal procedures, decontamination units installation and maintenance requirements, site safety and health requirements, etc. and have had a minimum of 2 years on-the-job experience.

b. Lead Paint

The Contractor's full-time onsite Competent Person shall meet the competent person requirements of 29 CFR 1926 Section .62 and be experienced in administration and supervision of projects involving lead-based paint, including work practices, protective measures for personnel, etc. This person shall have completed a Contractor Supervisor LBP abatement course by an EPA Training Center or an equivalent certification course, and have had a minimum of 2 years on-the-job experience.

1.6.3.2 Testing Laboratory

a. Asbestos

The Contractor shall provide the name, address and telephone number of the independent testing laboratory selected to perform the sample analyses and report the results. The testing laboratory shall be completely independent from the Contractor as recognized by federal, state or local regulations. Written verification, signed by the testing laboratory principal and the Contractor, that the laboratory is fully equipped and proficient in conducting PCM of airborne samples using the methods specified by 29 CFR 1926, Section .1101, OSHA method ID-160, and the most current version of NIOSH Pub No. 84-100 Method 7400. Evidence that the laboratory is currently judged proficient (classified as acceptable) in counting airborne asbestos samples by PCM by successful participation in each of the last 4 rounds in the American Industrial Hygiene Association (AIHA) shall be submitted.

b. Lead Paint

The laboratory performing the analysis shall be an EPA National Lead Laboratory Accreditation Program (NLLAP) accredited laboratory and be rated proficient in the NIOSH/EPA Environmental Lead Proficiency Analytical Testing Program (ELPAT). Currently, the American Association for Laboratory Accreditation (ASLA) and the American Industrial Hygiene Association (AIHA) are the EPA recognized laboratory accreditors.

1.6.4 Exposure Assessment

1.6.4.1 Asbestos

a. Initial Exposure Assessment

The Contractor's Competent Person shall conduct an exposure assessment immediately before or at the initiation of an asbestos abatement operation to ascertain expected exposures during that operation. The assessment shall be completed in time to comply with the requirements which are triggered by exposure data or the lack of a negative exposure assessment, and to provide information necessary to assure that all control systems planned are appropriate for that operation. The assessment shall take into consideration both the monitoring results and all observations, information or calculations which indicate employee exposure to asbestos, including any previous monitoring conducted in the workplace, or of the operations of the Contractor which indicate the levels of airborne asbestos likely to be encountered on the job.

b. Negative Exposure Assessment

The Contractor may provide a negative exposure assessment for the specific asbestos job covered by this Specification Section. When provided, the Negative Exposure Assessment shall be based on one or more of the following criteria:

(1) Objective Data: Objective data demonstrating that the product or material containing asbestos minerals or the activity involving such product or material cannot release airborne fibers in concentrations exceeding the PEL-TWA and PEL-Excursion Limit under those work conditions having the greatest potential for releasing asbestos.

(2) Prior Asbestos Jobs: Where the Contractor has monitored prior asbestos jobs for the PEL and the PEL-Excursion Limit within 12 months of the current job, the monitoring and analysis were performed in compliance with asbestos standard in effect; the data were obtained during work operations conducted under workplace conditions closely resembling the processes, type of material, control methods, work practices, and environmental conditions used and prevailing in the Contractor's current operations; the operations were conducted by employees whose training and experience are no more extensive than that of employees performing the current job; and these data show that under the conditions prevailing and which will prevail in the current workplace, there is a high degree of certainty that the monitoring covered exposure from employee exposures will not exceed the PEL-TWA and PEL-Excursion Limit.

(3) Initial Exposure Monitoring: The results of initial exposure monitoring of the current job, made from breathing zone air samples that are representative of the 8-hour PEL-TWA and 30-minute short-term exposures of each employee. The monitoring covered exposure from operations which are most likely during the performance of the entire asbestos job to result in exposures over the PELs.

1.6.4.2 Lead Paint

For personnel who may be exposed to dust resulting from demolition or removal of painted surfaces, the Contractor is required to perform an exposure assessment to determine personnel exposure levels to lead. This assessment shall consist of personal air monitoring representative of a

full shift. Airborne concentrations of lead shall be collected and analyzed in accordance with 29 CFR 1926 Section .62. Results shall be reported in micrograms per cubic meter of air. The Competent Person shall use personal air monitoring results to determine the effectiveness of engineering controls, the adequacy of PPE and to determine if proper work practices are being employed. The Contracting Officer shall be notified if any personal air monitoring result equals or exceeds 30 micrograms per cubic meter of air. The Contractor shall take steps to reduce the concentration of lead in the air. If results are obtained indicating employee exposure below the action level for lead (30 ug/m3) the Competent Person may recommend to the Contracting Officer, in writing, appropriate reductions in employee protection. Alternatively, as determined by the Competent Person, where the Contractor has previously monitored for lead exposures within the past 12 months during work operations conducted under workplace conditions closely resembling the processes, type of materials, control methods, work practices, and environmental conditions used and prevailing in the Contractor's current operations, the Contractor may, upon approval of the Contracting Officer, use this data in making the initial determination of employee exposure.

1.6.5 Employee Protection

Until monitoring results are received which document that the employee is not exposed above the action level for asbestos or lead, the Contractor shall implement employee protective measures as listed below:

1.6.5.1 Respiratory Protection Program

A respiratory protection program shall be established as required by 29 CFR 1926 Section .103, .1101 and .62 and in accordance with 29 CFR 1910 Section .134. A NIOSH-approved respirator and cartridges appropriate to the job, as determined by the Competent Person, shall be furnished to each employee and visitor potentially exposed to airborne asbestos or lead. A fit test shall be conducted in accordance with applicable sections of 29 CFR 1926.

1.6.5.2 Protective Equipment

The Contractor shall furnish, at no cost to personnel, equipment/clothing for protection from airborne and waterborne asbestos and LBP debris. An adequate supply of disposable full-body coveralls, steel toe/shank boots with nonskid soles or impermeable work boot covers, gloves, hard hats and eye protection shall be worn by workers in regulated work areas. Employees shall be instructed in appropriate practices for donning and removing protective equipment. Protective clothing and equipment shall not be removed from the work site at any time.

1.6.5.3 Decontamination Areas

The employer shall establish a decontamination area that is adjacent to the regulated area for the decontamination of employees and their equipment which is contaminated with asbestos. The decontamination area shall be a designated area shall be covered by an impermeable drop cloth and shall be of sufficient size to accommodate cleaning of equipment and for removing personal protective equipment without spreading contamination beyond the area. The decontamination area shall be estae assessment shall be completed in time to comply with the requirements which are triggered by exposure data or the lack of a negative exposure assessment, and to provide information necessary to assure that all control systems planned are appropriate for that operation. The assessment shall take into

consideration both the monitoring results and all observations, information or calculations which indicate employee exposure to asbestos, including any previous monitoring conducted in the workplace, or of the operations of the Contractor which indicate the levels of airborne asbestos likely to be encountered on the job.

b. Negative Exposure Assessment

The Contractor may provide a negative exposure assessment for the specific asbestos job covered by this Specification Section. When provided, the Negative Exposure Assessment shall be based on one or more of the following criteria:

(1) Objective Data: Objective data demonstrating that the product or material containing asbestos minerals or the activity involving such product or material cannot release airborne fibers in concentrations exceeding the PEL-TWA and PEL-Excursion Limit under those work conditions having the greatest potential for releasing asbestos.

(2) Prior Asbestos Jobs: Where the Contractor has monitored prior asbestos jobs for the PEL and the PEL-Excursion Limit within 12 months of the current job, the monitoring and analysis were performed in compliance with asbestos standard in effect; the data were obtained during work operations conducted under workplace conditions closely resembling the processes, type of material, control methods, work practices, and environmental conditions used and prevailing in the Contractor's current operations; the operations were conducted by employees whose training and experience are no more extensive than that of employees performing the current job; and these data show that under the conditions prevailing and which will prevail in the current workplace, there is a high degree of certainty that the monitoring covered exposure from employee exposures will not exceed the PEL-TWA and PEL-Excursion Limit.

(3) Initial Exposure Monitoring: The results of initial exposure monitoring of the current job, made from breathing zone air samples that are representative of the 8-hour PEL-TWA and 30-minute short-term exposures of each employee. The monitoring covered exposure from operations which are most likely during the performance of the entire asbestos job to result in exposures over the PELs.

1.6.5.4 Lead Paint

For personnel who may be exposed to dust resulting from demolition or removal of painted surfaces, the Contractor is required to perform an exposure assessment to determine personnel exposure levels to lead. This assessment shall consist of personal air monitoring representative of a full shift. Airborne concentrations of lead shall be collected and analyzed in accordance with 29 CFR 1926 Section .62. Results shall be reported in micrograms per cubic meter of air. The Competent Person shall use personal air monitoring results to determine the effectiveness of engineering controls, the adequacy of PPE and to determine if proper work practices are being employed. The Contracting Officer shall be notified if any personal air monitoring result equals or exceeds 30 micrograms per cubic meter of air. The Contractor shall take steps to reduce the concentration of lead in the air. If results are obtained indicating employee exposure below the action level for lead (30 ug/m3) the Competent Person may recommend to the Contracting Officer, in writing, appropriate reductions in employee protection. Alternatively, as determined by the

Competent Person, where the Contractor has previously monitored for lead exposures within the past 12 months during work operations conducted under workplace conditions closely resembling the processes, type of materials, control methods, work practices, and environmental conditions used and prevailing in the Contractor's current operations, the Contractor may, upon approval of the Contracting Officer, use this data in making the initial determination of employee exposure.

1.6.6 Employee Protection

Until monitoring results are received which document that the employee is not exposed above the action level for asbestos or lead, the Contractor shall implement employee protective measures as listed below:

1.6.6.1 Respiratory Protection Program

A respiratory protection program shall be established as required by 29 CFR 1926 Section .103, .1101 and .62 and in accordance with 29 CFR 1910 Section .134. A NIOSH-approved respirator and cartridges appropriate to the job, as determined by the Competent Person, shall be furnished to each employee and visitor potentially exposed to airborne asbestos or lead. A fit test shall be conducted in accordance with applicable sections of 29 CFR 1926.

1.6.6.2 Protective Equipment

The Contractor shall furnish, at no cost to personnel, equipment/clothing for protection from airborne and waterborne asbestos and LBP debris. An adequate supply of disposable full-body coveralls, steel toe/shank boots with nonskid soles or impermeable work boot covers, gloves, hard hats and eye protection shall be worn by workers in regulated work areas. Employees shall be instructed in appropriate practices for donning and removing protective equipment. Protective clothing and equipment shall not be removed from the work site at any time.

1.6.6.3 Decontamination Areas

The employer shall establish a decontamination area that is adjacent to the regulated area for the decontamination of employees and their equipment which is contaminated with asbestos. The decontamination area shall be a designated area shall be covered by an impermeable drop cloth and shall be of sufficient size to accommodate cleaning of equipment and for removing personal protective equipment without spreading contamination beyond the area. The decontamination area shall be established in a manner such that employees must enter and exit the decontamination area through the equipment drop area. Work clothing, must be HEPA vacuumed before it is removed. Equipment and other surfaces shall be cleaned prior to removing the items from the decontamination area. To prevent cross-contamination, the employer shall provide storage facilities for protective work clothing and equipment that are segregated from storage areas for street clothes and non-contaminated equipment. The employer shall also assure that employees do not leave the workplace wearing any protective clothing or equipment that is required to be worn during the work shift.

1.6.6.4 Handwashing Facilities

The employer shall provide adequate handwashing facilities for use by employees in accordance with 29 CFR 1926.51(f) and shall assure that employees wash their hands and face at the end of the work-shift.

1.6.6.5 Medical Surveillance

a. Asbestos

Before being exposed to airborne asbestos fibers, workers shall be provided with a medical examination as required by 29 CFR 1926, Section .1101(m) and other pertinent state or local requirements. This requirement shall have been satisfied within the last 12 months. The same medical examination shall be given on an annual basis to employees engaged in an occupation involving asbestos and within 30 calendar days before or after the termination of employment in such occupation. X-ray films of asbestos workers shall be identified to the consulting radiologist and medical record jackets shall be marked with the word "asbestos."

b. Lead Paint

Medical surveillance for lead shall comply with the requirements of 29 CFR 1926 Section 62(j) and other pertinent state or local requirements. Analysis for blood lead and zinc protoporphyrin levels shall be included in the examination portion of the medical surveillance program.

1.6.6.6 Training

a. Asbestos

Workers conducting Class II asbestos work shall be provided training prior to the time of job assignment and, at least, annually. Training shall include, at a minimum the elements specified in 29 CFR 1926 Section .1101(k)(9)"Employee Information and Training".

b. Lead Paint

Workers potentially exposed to lead-contaminated dust shall be provided training regarding lead hazards prior to the time of job assignment and, at least, annually. Training shall include, at a minimum the elements specified in 29 CFR 1926 Section .62(l) "Employee Information and Training".

1.6.7 Engineering Controls

Engineering controls shall be employed to maintain the integrity of the asbestos material and lead paint and to minimize the potential for release of asbestos fibers or generation of lead-containing dust. Asbestos-containing materials shall not be cut, ground, abraded or handled in any other manner that may render the material friable as described in 40 CFR 61, Subpart M and OSHA 29 CFR 1926.1101. The contractor shall describe proposed engineering control methods and practices in the lead safety and asbestos safety portions of the accident prevention plan.

PART 2 PRODUCTS (NOT APPLICABLE)

PART 3 EXECUTION (NOT APPLICABLE)

-- End of Section --

SECTION TABLE OF CONTENTS

DIVISION 01 - GENERAL REQUIREMENTS

SECTION 01450

CHEMICAL DATA QUALITY CONTROL

10/97

PART 1 GENERAL

1.1 REFERENCES
1.2 ACRONYMS
1.3 MEASUREMENT AND PAYMENT
1.4 CHEMISTRY REQUIREMENTS
1.4.1 Site History
1.4.2 Data Quality Objectives (DQO)
1.4.3 Underground Storage Tank Testing Requirements The following sections outline the analytical approach and requirements for tank closure activities. Tank closure activities shall be conducted in accordance with the State of Iowa regulations.
1.4.3.1 Confirmation Sampling
1.4.3.2 Tank Coating Testing
1.4.3.3 Asbestos Testing
1.4.3.4 Pumpable Liquids

1.4.3.5 Manifesting Samples
1.4.3.6 Tank Sludge Sampling
1.4.3.7 Real-Time Instrumental Measurement Samples
1.4.3.8 Transportation, Storage and Disposal (TSD) Facility Testing requirements
1.4.3.9 Borrow Soil analysis
1.4.3.10 Fuel Disposal Testing
1.4.3.11 Stockpiled Soil
1.5 QUALITY ASSURANCE ELEMENTS
1.5.1 Laboratory Validation Requirements
1.5.2 Quality Assurance Sample Collection and Analysis
1.5.3 Single or Double Blind Performance Evaluation Samples
1.5.4 Review of Primary Laboratory Data
1.5.5 Validation of Data
1.6 SUBMITTALS
1.7 QUALIFICATIONS
1.7.1 Chemical Quality Control Officer
1.7.2 Project Chemist
1.7.3 Environmental Sampler
1.8 COORDINATION MEETING

PART 2 PRODUCTS (NOT APPLICABLE)

PART 3 EXECUTION

3.1 GENERAL REQUIREMENTS
3.2 QUALITY CONTROL PLAN
3.2.1 Additional Requirements

3.2.2 Chemistry Elements of the CQC Plan
3.2.2.1 Qualifications
3.2.2.2 Authority and Responsibility
3.3 SAMPLING AND ANALYSIS PLAN
3.3.1 Field Sampling Plan
3.3.2 Quality Assurance Project Plan
3.4 Not Used
3.5 CONTROL OF CHEMICAL DATA QUALITY
3.6 ANALYTICAL TESTING LABORATORIES
3.6.1 Laboratory Analytical Requirements
3.6.2 Laboratory Performance
3.7 CHEMICAL DATA FINAL REPORT
3.8 DOCUMENTATION
3.9 NOTIFICATION OF NON-COMPLIANCE

-- End of Section Table of Contents --

SECTION 01450

CHEMICAL DATA QUALITY CONTROL
10/97

PART 1 GENERAL

1.1 REFERENCES

The publications listed below form a part of this specification to the extent referenced. The publications are referred to in the text by basic designation only.

CODE OF FEDERAL REGULATIONS (CFR)

40 CFR 261	Identification and Listing of Hazardous Waste
40 CFR 262	Standards Applicable to Generators of Hazardous Waste
40 CFR 268	Land Disposal Restrictions
49 CFR 172	Hazardous Materials Table, Special Provisions, Hazardous Materials Communications, Emergency Response Information, and Training Requirements
49 CFR 178	Specifications for Packagings

ENGINEERING MANUALS (EM)

EM 200-1-3	(1994) Requirements for the Preparation of Sampling and Analysis Plans Ch 1
EM 200-1-6	(1997) Chemical Quality Assurance

ENGINEERING REGULATIONS (ER)

ER 1110-1-263	(1998) Data Quality Management for Hazardous, Toxic, Radioactive Waste Remedial Activities

ENVIRONMENTAL PROTECTION AGENCY (EPA)

EPA SW-846	(Rev O; updates I, II, IIA, IIB, and III) Test Methods for Evaluating Solid Waste (Vol IA, IB, IC, and II)

1.2 ACRONYMS

The definition of acronyms used by the Contractor that pertain to chemical data quality control shall be clearly defined for all contract related

products and communications.

1.3 MEASUREMENT AND PAYMENT

Separate payment will not be made for providing and maintaining the chemical data quality requirements including the chemical data quality management, chemical data validation, minimum chemical data reporting requirements, and chemical data quality submittal requirements; these costs shall be included in the applicable unit prices or lump sum prices contained in the bidding schedule.

1.4 CHEMISTRY REQUIREMENTS

Chemical Data Quality Control (CDQC) shall be as defined in ER 1110-1-263; this ER, which integrates USACE guidance on the subject, shall be supplemented by EM 200-1-6 for detail technical guidance on CDQC. Tables and charts defining Design Analysis (DA), ROD, and remedial technology specific chemistry shall be according to or consistent with EM 200-1-3.

1.4.1 Site History

See Paragraph 1.1 of SECTION 02115A Underground Storage Tank Removal.

1.4.2 Data Quality Objectives (DQO)

Sample acquisition, chemical analysis and chemical parameter measurements shall be performed so that the resulting data meet and support data use requirements. The chemical data shall be acquired, documented, verified and reported to ensure that the specified precision, accuracy, representativeness, comparability, completeness and sensitivity requirements are achieved.

1.4.3 Underground Storage Tank Testing Requirements

The following sections outline the analytical approach and requirements for tank closure activities. Tank closure activities shall be conducted in accordance with the State of Iowa regulations.

1.4.3.1 Confirmation Sampling

Soil and Groundwater Sampling Requirements
The Contractor shall excavate and remove the existing tank. A minimum of two soil samples shall be collected from beneath each end of the tank. The Contractor shall document the use of headspace screening, visual,olfactory, or other means when collecting a soil sample. Soil samples shall be analyzed by Iowa Method OA-1 and OA-2. In the case of high water conditions, it may not be possible to collect soil samples. In lieu of collecting soil samples, the Contractor shall document visual observations, such as a sheen, and shall collect one groundwater sample directly from the excavation. Groundwater samples shall be analyzed for benzene, toluene, ethylbenzene and xylene (BTEX) by EPA Method 8021B or 8260B, and for Total Extractable Hydrocarbons (TEH) by EPA Method 8015B Diesel Range Organics (DRO). The Contractor shall install a temporary piezometer/monitoring well to sample the groundwater in the vicinity of the tanks. Monitoring wells shall be no further than 20 feet from the tank excavation. Groundwater samples shall be anlyzed for benzene, toluene, ethylbenzene and xylene (BTEX) by EPA Method 8021B or 8260B, and for TEH (DRO) by EPA Method 8015B. The actual number of analyses shall be determined in the field by the COR, and as required by IAC Chapter 567-135 requirements.

1.4.3.2 Tank Coating Testing

For purpose of this contract, assume the USTs contain a Polychlorinated biphenyl (PCB) coating and samples will be required for disposal at an approved landfill. Samples shall be analyzed for PCBs by EPA Method 8082 and asbestos. Tank coating samples will require additional sample cleanup, due to creosote and oil, prior to analysis. The Contractor shall make the laboratory aware of the samples prior to analysis.

1.4.3.3 Asbestos Testing

Samples shall be analyzed by Polarized Light Microscopy (PLM) in accordance with 40 CFR Part 763, Appendix E to Subpart E. Laboratories selected shall be currently accredited by the National Institute for Standards and Technology (NIST) under the National Voluntary Laboratory Accreditation Program (NVLAP) for bulk asbestos analysis and must use analysts with demonstrated proficiency to conduct PLM to include its application to the identification and quantification of asbestos content. A material is considered to be asbestos-containing material if it contains more than 1 percent asbestos. If the laboratory determines that the sample must be ashed for asbestos analysis, the PCB analysis shall be performed first. Samples which contain PCBs cannot be ashed.

1.4.3.4 Pumpable Liquids

Pumpable liquids such as tank rinsate shall be assumed to be special waste until proven to be hazardous by analysis. The specific analyses required will be dictated by the disposal facility. Rinsate from tanks may be combined. For estimating purposes, assume one (1) sample shall be analyzed for disposal parameters including VOCs (8260B), SVOCs (8270C) metals (6010B/7000A) corrosivity (1110 or 9040B) and ignitability (1010 or 1020A). The actual number of analyses shall be determined in the field by the COR.

1.4.3.5 Manifesting Samples

Material shipping manifesting shall be in accordance with 40 CFR 261, 40 CFR 262, 40 CFR 268, 49 CFR 172, and 49 CFR 178 for any material determined to be hazardous through testing.

1.4.3.6 Tank Sludge Sampling

Sludge material shall be assumed to be a special waste until proven to be hazardous by analysis. The specific analyses required will be dictated by the disposal facility. For estimating purposes, assume one (1) sample is to be analyzed for disposal parameters including the Paint Filter Liquids test (9095A), ignitibility corrosivity, TPH, and VOCs. The actual number of analyses shall be determined in the field by the COR.

1.4.3.7 Real-Time Instrumental Measurement Samples

Real-time instrumental measurements shall be analyzed onsite for volatile organics using a calibrated photo-ionization detector (PID).All soil indicating less than 10 ppm on the PID shall be considered clean.

1.4.3.8 Transportation, Storage and Disposal (TSD) Facility Testing requirements

Hazardous materials shall be siposed at an appropriate RCRA permitted treatment, storage and disposal facility (TSD). If the material is not a

listed hazardous wste and passes other characteristic tests, the material shall be disposed at the appropriate non-hazardous waste facility. A typical TSD required analysis for this type of waste is listed:

Conventional analyses

-Percent Solids
-Ash Content
-BTU Content
-Total Halogen Content
-Total Sulfur
-pH
-Flash Point
-(Boiling point on materials with Flash 23 degrees C

Metals
-Sb, As, Ba, Be, Cd, Cr, Cu, Fe, Mn, Hg, Pb, Mo, Ni, K, Se, Ag, Na, Tl, V, Zn

Organics
-Volatile Organics (GC/MS +TICs)
-Semivolatile Organics (GC/MS + TICs)
-PCBs
-Total Petroleum Hydrocarbons

1.4.3.9 Borrow Soil analysis

Representative composite soil samples shall be analyzed for TPH, PCBs and the eight RCRA metals constitutents. Grab samples shall be analyzed for VOCs. The chemical analysis results shall be provided to the USACE Contracting Officer. The Contracting Officer will determine the suitability of the borrow soil before it is brought on site. For estimating purposes, assume a total of two (2) soil samples shall be collected and analyzed. The actual number of analyses shall be determined in the field by the COR.

1.4.3.10 Fuel Disposal Testing

Samples of the fuel shall be analyzed for recycling or disposal as appropriate. Fuels may be bulked and containerized as advantageous to the Government.

1.4.3.11 Stockpiled Soil

A composite soil sample shall be collected from each stockpile (See Paragraph 3.8.3 of Section 02115A)and analyzed by Iowa methods OA-1 and OA-2 for disposal purposes.

1.5 QUALITY ASSURANCE ELEMENTS

The Contractor shall be responsible for the following QA elements necessary to monitor and ensure the quality of chemical data produced.

1.5.1 Laboratory Validation Requirements

Laboratories used on this project shall be certified by the State of Iowa for the methods listed in this specification.

1.5.2 Quality Assurance Sample Collection and Analysis

No Quality Assurance samples shall be collected and analyzed for this project.

1.5.3 Single or Double Blind Performance Evaluation Samples

To be certifed by the State of Iowa, these samples may be required to be analyzed.

1.5.4 Review of Primary Laboratory Data

The Contractor shall be responsible for the independent data review of the entire primary data set.

1.5.5 Validation of Data

The Contractor shall be responsible for validating all TEH (8015B) data. The data validation strategy shall be established at the beginning of the project to be consistent with project DQOs.

1.6 SUBMITTALS

Government approval is required for submittals with a "G" designation; submittals not having a "G" designation are for information only. When used, a designation following the "G" designation identifies the office that will review the submittal for the Government. The following shall be submitted in accordance with Section 01330 SUBMITTAL PROCEDURES:

SD-03 Product Data

Sampling and Analysis Plan; GA.

The SAP including the Field Sampling Plan (FSP) and the Quality Assurance Project Plan (QAPP), no later than 15 working days after receipt of notice to proceed.

SD-06 Test Reports

Chemical Data Final Report; GA.

The CDFR shall be provided within 14 days of completing work at the site, before final payment. Each report shall be labeled with the contract number, project name and location.

1.7 QUALIFICATIONS

1.7.1 Chemical Quality Control Officer

As a minimum, the Contractor's Chemical Quality Control Officer shall have: a Bachelors degree in Chemistry; 3 years of experience related to investigations, studies, design and remedial actions at HTRW sites; and 2 field seasons (or one continuous calendar year experience) in calibration and operation of various field monitoring devices as well as standard analytical chemistry methods common for analyzing soil, water, air and other materials for chemical contamination assessment, including hazardous waste manifesting. The Chemical Quality Control Officer shall ensure that all chemistry related objectives including responsibilities for DQO definitions, sampling and analysis, project requirements for data documentation and validation, and final project reports are attained. The

Chemical Quality Control officer need not be present onsite during routine sampling, but shall be available for consultation with Government and Contractor personnel.

1.7.2 Project Chemist

As a minimum, the Contractor's Senior Chemist shall have: a Bachelors degree in Chemistry; 2 years of experience related to investigations, studies, design and remedial actions at HTRW sites; 2 field seasons experience in calibrating and operating various field monitoring devices; and 2 years of experience in the operation of an HTRW commercial laboratory with standard analytical chemistry methods common for analyzing soil, water, air and other materials for chemical contamination assessment, including data for hazardous waste manifesting. The project chemist shall ensure that all chemistry related goals of the program are attained. The project chemist shall be onsite during all sampling events and shall also be available for consultation with Government personnel.

1.7.3 Environmental Sampler

As a minimum, the Contractor's Environmental Sampler shall have: an Associate degree in Chemistry, Environmental Science, Engineering, Geology, Hydrology, or a related field; 2 years of experience in and knowledge of EPA methods for collecting environmental and hazardous waste samples; 1 years of experience in operation of field screening equipment (e.g. PID, FID, infrared spectrometer, immunoassay, etc.); and 1 field season of experience with the particular field screening techniques for use on this project. The Environmental Sampler shall collect all onsite samples and perform all field screening tests. The Environmental Sampler shall review the sampling results, and provide recommendations for the Contractor's sampling program. The Environmental Sampler shall be onsite during excavation and stockpiling operations involving contaminated soil or soil to be checked for contamination.

1.8 COORDINATION MEETING

After the preconstruction conference, before any sampling or testing, the Contractor and the Contracting Officer will meet to discuss the CQC Plan and the SAP. The coordination meeting will be simultaneous to any CQC coordination meeting required in Section 01451 CONTRACTOR QUALITY CONTROL unless otherwise indicated or directed. A list of definable features that involve chemical measurements shall be agreed upon. At a minimum, each matrix (soil, water, air, containerized wastes, radioactive wastes, instrumental chemical parameter measurement, etc.) shall be a definable work feature. Management of the chemical data quality system including project DQO, project submittals, chemical data documentation, chemical data assessment, required sampling and analysis protocols, and minimum data reporting requirements shall be agreed upon. The meeting will serve to establish an interrelationship between the Contractor's chemical data quality management and Government chemical quality assurance requirements. Minutes of the meeting will be documented by the Government and shall be signed by both the Contractor and the Contracting Officer. The minutes will include any or all unresolved chemical issues along with the conditions for resolution and will become a part of the contract file.

PART 2 PRODUCTS (NOT APPLICABLE)

PART 3 EXECUTION

3.1 GENERAL REQUIREMENTS

The Contractor shall be responsible for chemical sample acquisition, sample analysis, instrumental measurements of chemical parameters and for chemical data quality control. An effective chemical data quality control system shall be established that meets the requirements for the chemical measurement DQO applicable to the project. The system shall cover chemical measurements pertaining to and required for Contractor and subcontractor produced chemical data. The Contractor shall control field screening, sampling, and testing in conjunction with remedial activities to meet all DQO; minimize the amount of excavated material requiring temporary storage; prevent dilution of contaminated soils with clean soils; and ensure completion of work within the required time.

3.2 QUALITY CONTROL PLAN

3.2.1 Additional Requirements

In addition to the quality control requirements specified in Section 01451 CONTRACTOR QUALITY CONTROL, the CQC Plan shall incorporate the qualifications, authority and responsibilities of all chemical quality management and support personnel. Chemical measurements including sampling and/or chemical parameter measurement will not be permitted to begin until after production and acceptance of the CQC Plan, and Government approval of the SAP.

3.2.2 Chemistry Elements of the CQC Plan

To cover contract related chemical measurements by the Contractor and all subcontractors, the CQC Plan shall include the following as a minimum.

3.2.2.1 Qualifications

Names, education, experience qualifications, authorities, and decision-making responsibilities of all chemical quality management and support personnel. The CQC Plan shall contain a copy of a letter from the project QC manager designating and authorizing a Chemical Quality Control Officer and chemical quality control organization staff.

3.2.2.2 Authority and Responsibility

A diagram, flow chart, or figure clearly depicting the chemical data quality management and support staff and the authority and responsibility of each for chemical sampling and analysis, procedures for corrective actions, deliverables and submittals, deviations and changes, chemical quality documentation, data validation, minimum data reporting requirements, and DQO for chemical parameter measurement by the Contractor and subcontractors. The contents of this section of the CQC Plan shall be included in the applicable "Project Organization" elements of the FSP and the QAPP.

3.3 SAMPLING AND ANALYSIS PLAN

The SAP shall be prepared in accordance with CDQC requirements and EM 200-1-3. The SAP shall be a single document that contains two distinct elements: FSP and QAPP. Sections of the FSP and QAPP [shall not] be cross referenced. The SAP shall confirm the Contractor's understanding of the contract requirements for chemical data quality control, and shall describe procedures for field sampling and sample submittal for analysis,

field chemical parameter measurement, data documentation, data assessment and data reporting requirements. The SAP shall delineate the methods the Contractor intends to use to accomplish the chemical quality control items to assure accurate, precise, representative, complete, legally defensible and comparable data. The SAP shall describe all chemical parameter measurements for all matrices for all phases of the remediation contract. As a single interrelated document, the SAP shall be provided to field and laboratory personnel. The Contractor may propose original/innovative approaches to chemical parameter measurements for cost reduction and remediation efficiency by abbreviated sampling, contingency sampling and/or contingency analysis, indicator or tracer analysis, onsite analytical services, equivalency or screening methods. The SAP shall clearly identify the Contractor obtained laboratories. The Contractor shall furnish copies of the Government approved SAP to all laboratories and the Contractor's field sampling crew. The SAP shall address all levels of the investigation with enough detail to become a document which may be used as an audit guide for field and laboratory work.

3.3.1 Field Sampling Plan

The FSP shall contain necessary technical detail and direction for the field personnel to understand sampling and field measurement requirements. The FSP shall provide a comprehensive description and full detail for personnel to perform all onsite activities required to attain project DQO, including: locations of samples, sampling procedures for onsite and offsite chemical analysis, summaries of analyses to be performed on samples, shipment of samples for offsite analyses, performance of onsite and offsite instrumental parameter measurements, data documentation and reporting requirements.

3.3.2 Quality Assurance Project Plan

The QAPP shall contain necessary technical detail and direction for field and laboratory personnel to understand project sample analysis, quality control and data reporting requirements, analytical methods, required detection limits, QC requirements, and data validation and reporting requirements.

3.4 Not Used

3.5 CONTROL OF CHEMICAL DATA QUALITY

Contractor chemical data quality control shall ensure that a quality control program is in place that assures sampling and analytical activities and the resulting chemical parameter measurement data comply with the DQO and the requirements of the SAP. The Contractor shall utilize the three-phase control system that includes a preparatory, initial and follow-up phase for each definable feature of work. The Contractor's three-phase chemical data control process shall ensure that data reporting requirements are achieved and shall be implemented according to Section 01451 CONTRACTOR QUALITY CONTROL. The three-phase chemical data control process shall be combined with that under Section 01451 CONTRACTOR QUALITY CONTROL.

3.6 ANALYTICAL TESTING LABORATORIES

The Contractor shall propose the analytical laboratories to be used for the primary samples analyses. Laboratory validation requirements shall be in accordance with paragraph Laboratory Validation Requirements. The

Contractor may utilize its own laboratory or utilize subcontract laboratories to achieve the primary required sample analyses.

3.6.1 Laboratory Analytical Requirements

The Contractor shall provide the specified chemical analyses by the Contractor's laboratory. The Contractor shall provide chemical analyses to achieve the project DQO for all parameters specified by the methods. To give the USACE programs the greatest flexibility in the execution of its projects, the EPA SW-846 methods are generally the methods employed for the analytical testing of environmental samples. These methods are flexible and shall be adapted to individual project-specific requirements.

3.6.2 Laboratory Performance

The Contractor shall provide continued acceptable analytical performance and shall establish a procedure to address data deficiencies noted by review and/or quality assurance sample results. The Contractor shall provide and implement a mechanism for providing analytical labs with the SAP or QAPP portion of the SAP, for monitoring the lab's performance and for performing corrective action procedures. The Contractor shall acquire analytical services with additional State of Iowa validated laboratories in the event a project lab loses its validation status during the project.

3.7 CHEMICAL DATA FINAL REPORT

The CDFR shall be produced including a summary of quality control practices employed and all chemical parameter measurement activities after project completion. As a minimum, the CDFR shall contain the following:

a. Summary of project scope and description.

b. Summary of any deviations from the design chemical parameter measurement specifications.

c. Summary of chemical parameter measurements performed as contingent measurements.

d. Summary discussion of resulting data including achieving data reporting requirements.

e. Summary of achieving project specific DQO.

f. Presentation and evaluation of the data to include an overall assessment on the quality of the data for each method and matrix.

g. Internal QC data generated during the project, including tabular summaries correlating sample identifiers with all blank, matrix spikes, surrogates, duplicates, laboratory control samples, and batch identifiers.

h. A list of the affected sample results for each analyte (indexed by method and matrix) including the appropriate data qualifier flag (J, B, R, etc.), where sample results are negatively impacted by adverse quality control criteria.

i. Summary of field and laboratory oversight activities, providing a discussion of the reliability of the data, QC problems encountered, and a summary of the evaluation of data quality for

each analysis and matrix as indicated by the laboratory QC data and any other relevant findings.

j. Conclusions and recommendations.

k. Appendices containing: Chemistry data package.

3.8 DOCUMENTATION

Documentation records shall be provided as factual evidence that required chemical data has been produced and chemical data quality has been achieved. The documentation shall comply with the requirements specified in paragraphs SAMPLING AND ANALYSIS PLAN, and CHEMICAL DATA FINAL REPORT. Documentation requirements shall be in accordance with Section 01240 COST AND PERFORMANCE REPORT.

3.9 NOTIFICATION OF NON-COMPLIANCE

The Contracting Officer will notify the Contractor of any detected noncompliance with the foregoing requirements. The Contractor shall take immediate corrective action after receipt of such notice.

-- End of Section --

SECTION TABLE OF CONTENTS

DIVISION 01 - GENERAL REQUIREMENTS

SECTION 01451

CONTRACTOR QUALITY CONTROL

4/97 Omaha Rev 3/01

PART 1 GENERAL

1.1 REFERENCES
1.2 PAYMENT

PART 2 PRODUCTS (Not Applicable)

PART 3 EXECUTION

3.1 GENERAL
3.2 QUALITY CONTROL PLAN
3.2.1 General
3.2.2 Content of the CQC Plan
3.2.3 Acceptance of Plan
3.2.4 Notification of Changes
3.3 COORDINATION MEETING
3.4 QUALITY CONTROL ORGANIZATION
3.4.1 General
3.4.2 CQC System Manager
3.4.3 CQC Personnel
3.4.4 Additional Requirement
3.4.5 Organizational Changes
3.5 SUBMITTALS
3.6 CONTROL
3.6.1 Preparatory Phase
3.6.2 Initial Phase
3.6.3 Follow-up Phase
3.6.4 Additional Preparatory and Initial Phases
3.7 TESTS
3.7.1 Testing Procedure
3.7.2 Testing Laboratories
3.7.2.1 Validation Check
3.7.2.2 Validation Recheck
3.7.3 Onsite Laboratory
3.7.4 Furnishing or Transportation of Samples for Testing
3.8 COMPLETION INSPECTION
3.8.1 Punch-Out Inspection
3.8.2 Pre-Final Inspection
3.8.3 Final Acceptance Inspection
3.9 DOCUMENTATION
3.10 SAMPLE FORMS
3.11 NOTIFICATION OF NONCOMPLIANCE

-- End of Section Table of Contents --

SECTION 01451

CONTRACTOR QUALITY CONTROL
4/97
Omaha Rev 3/01

PART 1 GENERAL

1.1 REFERENCES

The publications listed below form a part of this specification to the extent referenced. The publications are referred to in the text by basic designation only.

AMERICAN SOCIETY FOR TESTING AND MATERIALS (ASTM)

ASTM D 3740	(1999b) Minimum Requirements for Agencies Engaged in the Testing and/or Inspection of Soil and Rock as Used in Engineering Design and Construction
ASTM E 329	(1998a) Agencies Engaged in the Testing and/or Inspection of Materials Used in Construction

1.2 PAYMENT

Separate payment will not be made for providing and maintaining an effective Quality Control program, and all costs associated therewith shall be included in the applicable unit prices or lump-sum prices contained in the Bidding Schedule.

PART 2 PRODUCTS (Not Applicable)

PART 3 EXECUTION

3.1 GENERAL

The Contractor is responsible for quality control and shall establish and maintain an effective quality control system in compliance with the Contract Clause titled "Inspection of Construction." The quality control system shall consist of plans, procedures, and organization necessary to produce an end product which complies with the contract requirements. The system shall cover all construction operations, both onsite and offsite, and shall be keyed to the proposed construction sequence. The site project superintendent will be held responsible for the quality of work on the job and is subject to removal by the Contracting Officer for non-compliance with the quality requirements specified in the contract. The site project superintendent in this context shall be the highest level manager responsible for the overall construction activities at the site, including quality and production. The site project superintendent shall maintain a physical presence at the site at all times, except as otherwise acceptable to the Contracting Officer, and shall be responsible for all construction and construction related activities at the site.

3.2 QUALITY CONTROL PLAN

3.2.1 General

The Contractor shall furnish for review by the Government, not later than 10 days after receipt of notice to proceed, the Contractor Quality Control (CQC) Plan proposed to implement the requirements of the Contract Clause titled "Inspection of Construction." The plan shall identify personnel, procedures, control, instructions, test, records, and forms to be used. The Government will consider an interim plan for the first 30 days of operation. Construction will be permitted to begin only after acceptance of the CQC Plan or acceptance of an interim plan applicable to the particular feature of work to be started. Work outside of the features of work included in an accepted interim plan will not be permitted to begin until acceptance of a CQC Plan or another interim plan containing the additional features of work to be started.

3.2.2 Content of the CQC Plan

The CQC Plan shall include, as a minimum, the following to cover all construction operations, both onsite and offsite, including work by subcontractors, fabricators, suppliers, and purchasing agents:

a. A description of the quality control organization, including a chart showing lines of authority and acknowledgment that the CQC staff shall implement the three phase control system for all aspects of the work specified. The staff shall include a CQC System Manager who shall report to the project superintendent.

b. The name, qualifications (in resume format), duties, responsibilities, and authorities of each person assigned a CQC function.

c. A copy of the letter to the CQC System Manager signed by an authorized official of the firm which describes the responsibilities and delegates sufficient authorities to adequately perform the functions of the CQC System Manager, including authority to stop work which is not in compliance with the contract. The CQC System Manager shall issue letters of direction to all other various quality control representatives outlining duties, authorities, and responsibilities. Copies of these letters shall also be furnished to the Government.

d. Procedures for scheduling, reviewing, certifying, and managing submittals, including those of subcontractors, offsite fabricators, suppliers, and purchasing agents. These procedures shall be in accordance with Section 01330 SUBMITTAL PROCEDURES.

e. Control, verification, and acceptance testing procedures for each specific test to include the test name, specification paragraph requiring test, feature of work to be tested, test frequency, and person responsible for each test. (Laboratory facilities will be approved by the Contracting Officer.)

f. Procedures for tracking preparatory, initial, and follow-up control phases and control, verification, and acceptance tests including documentation.

g. Procedures for tracking construction deficiencies from identification through acceptable corrective action. These procedures shall establish verification that identified deficiencies have been corrected.

h. Reporting procedures, including proposed reporting formats.

i. A list of the definable features of work. A definable feature of work is a task which is separate and distinct from other tasks, has separate control requirements, and may be identified by different trades or disciplines, or it may be work by the same trade in a different environment. Although each section of the specifications may generally be considered as a definable feature of work, there is frequently more than one definable features under a particular section. This list will be agreed upon during the coordination meeting.

3.2.3 Acceptance of Plan

Acceptance of the Contractor's plan is required prior to the start of construction. Acceptance is conditional and will be predicated on satisfactory performance during the construction. The Government reserves the right to require the Contractor to make changes in his CQC Plan and operations including removal of personnel, as necessary, to obtain the quality specified.

3.2.4 Notification of Changes

After acceptance of the CQC Plan, the Contractor shall notify the Contracting Officer in writing of any proposed change. Proposed changes are subject to acceptance by the Contracting Officer.

3.3 COORDINATION MEETING

After the Preconstruction Conference, before start of construction, and prior to acceptance by the Government of the CQC Plan, the Contractor shall meet with the Contracting Officer or Authorized Representative and discuss the Contractor's quality control system. The CQC Plan shall be submitted for review a minimum of 10 calendar days prior to the Coordination Meeting. During the meeting, a mutual understanding of the system details shall be developed, including the forms for recording the CQC operations, control activities, testing, administration of the system for both onsite and offsite work, and the interrelationship of Contractor's Management and control with the Government's Quality Assurance. Minutes of the meeting shall be prepared and signed by both the Contractor and the Contracting Officer. The minutes shall become a part of the contract file. There may be occasions when subsequent conferences will be called by either party to reconfirm mutual understandings and/or address deficiencies in the CQC system or procedures which may require corrective action by the Contractor.

3.4 QUALITY CONTROL ORGANIZATION

3.4.1 General

The requirements for the CQC organization are a CQC System Manager and sufficient number of additional qualified personnel to ensure safety and contract compliance. The Safety and Health Manager shall receive direction and authority from the CQC System Manager and shall serve as a member of the CQC staff. Personnel identified in the technical provisions as requiring specialized skills to assure the required work is being performed properly will also be included as part of the CQC organization. The Contractor's CQC staff shall maintain a presence at the site at all times during progress of the work and have complete authority and responsibility to take any action necessary to ensure contract compliance. The CQC staff

shall be subject to acceptance by the Contracting Officer. The Contractor shall provide adequate office space, filing systems and other resources as necessary to maintain an effective and fully functional CQC organization. Complete records of all letters, material submittals, show drawing submittals, schedules and all other project documentation shall be promptly furnished to the CQC organization by the Contractor. The CQC organization shall be responsible to maintain these documents and records at the site at all times, except as otherwise acceptable to the Contracting Officer.

3.4.2 CQC System Manager

The Contractor shall identify as CQC System Manager an individual within the onsite work organization who shall be responsible for overall management of CQC and have the authority to act in all CQC matters for the Contractor. The CQC System Manager shall be a graduate engineer, graduate architect, or a graduate of construction management, with a minimum of 2 years construction experience on construction similar to this contract. This CQC System Manager shall be on the site at all times during construction and shall be employed by the prime Contractor. The CQC System Manager shall be assigned no other duties An alternate for the CQC System Manager shall be identified in the plan to serve in the event of the System Manager's absence. The requirements for the alternate shall be the same as for the designated CQC System Manager.

3.4.3 CQC Personnel

A staff shall be maintained under the direction of the CQC system manager to perform all QC activities. The staff must be of sufficient size to ensure adequate QC coverage of all work phases, work shifts, and work crews involved in the construction. These personnel may perform other duties, but must be fully qualified by experience and technical training to perform their assigned QC responsibilities and must be allowed sufficient time to carry out these responsibilities. The QC plan will clearly state the duties and responsibilities of each staff member.

3.4.4 Additional Requirement

In addition to the above experience and education requirements the CQC System Manager shall have completed the course entitled "Construction Quality Management For Contractors" within the past five years and be in possession of the resulting certificate of instruction. If the individual designated as CQC System Manager does not currently meet this training requirement, the training must be accomplished within 60 days of the appointment to CQC System Manager. This course is periodically offered at each of the four area offices in the Omaha District according to the following revolving training schedule:

Badger Area	First Session	Between 15 & 25 April
	Second Session	Between 15 & 25 October
Point of Contact	Roy Brewer	(608) 388-4780
Black Hills Area	First Session	Between 1 & 10 March
	Second Session	Between 1 & 10 September
Point of Contact	Dwight Pochant	(605) 923-2983
Fort Crook Area	First Session	Between 15 & 25 January
	Second Session	Between 15 & 25 July
Point of Contact	Al Kreisler	(402) 293-2540

Rocky Mountain	First Session	Between 1 & 10 June
	Second Session	Between 1 & 10 December
Point of Contact	Paul Jendzejec	(719) 556-4184

The exact date and location for the sessions will be determined approximately 30 days in advance of the training. The cost of training is presently established at $25 to be paid by each student in advance of the training. For information about a particular session, the best source is the point of contact listed above..

3.4.5 Organizational Changes

The Contractor shall maintain the CQC staff at full strength at all times. When it is necessary to make changes to the CQC staff, the Contractor shall revise the CQC Plan to reflect the changes and submit the changes to the Contracting Officer for acceptance.

3.5 SUBMITTALS

Submittals shall be made as specified in Section 01330 SUBMITTAL PROCEDURES. The CQC organization shall be responsible for certifying that all submittals are in compliance with the contract requirements.

3.6 CONTROL

Contractor Quality Control is the means by which the Contractor ensures that the construction, to include that of subcontractors and suppliers, complies with the requirements of the contract. At least three phases of control shall be conducted by the CQC System Manager for each definable feature of work as follows:

3.6.1 Preparatory Phase

This phase shall be performed prior to beginning work on each definable feature of work, after all required plans/documents/materials are approved/accepted, and after copies are at the work site. This phase shall include:

a. A review of each paragraph of applicable specifications.

b. A review of the contract drawings.

c. A check to assure that all materials and/or equipment have been tested, submitted, and approved.

d. Review of provisions that have been made to provide required control inspection and testing.

e. Examination of the work area to assure that all required preliminary work has been completed and is in compliance with the contract.

f. A physical examination of required materials, equipment, and sample work to assure that they are on hand, conform to approved shop drawings or submitted data, and are properly stored.

g. A review of the appropriate activity hazard analysis to assure safety requirements are met.

h. Discussion of procedures for controlling quality of the work

including repetitive deficiencies. Document construction tolerances and workmanship standards for that feature of work.

i. A check to ensure that the portion of the plan for the work to be performed has been accepted by the Contracting Officer.

j. Discussion of the initial control phase.

k. The Government shall be notified at least 48 hours in advance of beginning the preparatory control phase. This phase shall include a meeting conducted by the CQC System Manager and attended by the superintendent, other CQC personnel (as applicable), and the foreman responsible for the definable feature. The results of the preparatory phase actions shall be documented by separate minutes prepared by the CQC System Manager and attached to the daily CQC report. The Contractor shall instruct applicable workers as to the acceptable level of workmanship required in order to meet contract specifications.

3.6.2 Initial Phase

This phase shall be accomplished at the beginning of a definable feature of work. The following shall be accomplished:

a. A check of work to ensure that it is in full compliance with contract requirements. Review minutes of the preparatory meeting.

b. Verify adequacy of controls to ensure full contract compliance. Verify required control inspection and testing.

c. Establish level of workmanship and verify that it meets minimum acceptable workmanship standards. Compare with required sample panels as appropriate.

d. Resolve all differences.

e. Check safety to include compliance with and upgrading of the safety plan and activity hazard analysis. Review the activity analysis with each worker.

f. The Government shall be notified at least 48 hours in advance of beginning the initial phase. Separate minutes of this phase shall be prepared by the CQC System Manager and attached to the daily CQC report. Exact location of initial phase shall be indicated for future reference and comparison with follow-up phases.

g. The initial phase should be repeated for each new crew to work onsite, or any time acceptable specified quality standards are not being met.

3.6.3 Follow-up Phase

Daily checks shall be performed to assure control activities, including control testing, are providing continued compliance with contract requirements, until completion of the particular feature of work. The checks shall be made a matter of record in the CQC documentation. Final follow-up checks shall be conducted and all deficiencies corrected prior to the start of additional features of work which may be affected by the deficient work. The Contractor shall not build upon nor conceal non-conforming work.

3.6.4 Additional Preparatory and Initial Phases

Additional preparatory and initial phases shall be conducted on the same definable features of work if the quality of on-going work is unacceptable, if there are changes in the applicable CQC staff, onsite production supervision or work crew, if work on a definable feature is resumed after a substantial period of inactivity, or if other problems develop.

3.7 TESTS

3.7.1 Testing Procedure

The Contractor shall perform specified or required tests to verify that control measures are adequate to provide a product which conforms to contract requirements. Upon request, the Contractor shall furnish to the Government duplicate samples of test specimens for possible testing by the Government. Testing includes operation and/or acceptance tests when specified. The Contractor shall procure the services of a Corps of Engineers approved testing laboratory or establish an approved testing laboratory at the project site. The Contractor shall perform the following activities and record and provide the following data:

a. Verify that testing procedures comply with contract requirements.

b. Verify that facilities and testing equipment are available and comply with testing standards.

c. Check test instrument calibration data against certified standards.

d. Verify that recording forms and test identification control number system, including all of the test documentation requirements, have been prepared.

e. Results of all tests taken, both passing and failing tests, shall be recorded on the CQC report for the date taken. Specification paragraph reference, location where tests were taken, and the sequential control number identifying the test shall be given. If approved by the Contracting Officer, actual test reports may be submitted later with a reference to the test number and date taken. An information copy of tests performed by an offsite or commercial test facility shall be provided directly to the Contracting Officer. Failure to submit timely test reports as stated may result in nonpayment for related work performed and disapproval of the test facility for this contract.

3.7.2 Testing Laboratories

3.7.2.1 Validation Check

The Contractor's laboratory shall have the ability to meet ASTM D 3740 and ASTM E 329, and specific tests required in the contract specifications. The Corps of Engineers (COE) will perform a validation check to assure compliance with the standards. If the Contractor's selected laboratory does not have a current COE validation, the validation check will occur after contract Notice to Proceed (NTP) and will take approximately 6 weeks to schedule and complete. Provisional acceptance of the laboratory will be given prior to the validation check if the Contractor provides information concerning laboratory qualifications and the ability to meet the required

standards listed above and in the contract.

3.7.2.2 Validation Recheck

If the selected laboratory fails the validation check, the Contractor will be assessed the actual cost for the recheck to reimburse the Government for each succeeding recheck of the laboratory or the checking of a subsequently selected laboratory. Such costs will be deducted from the contract amount due the Contractor.

3.7.3 Onsite Laboratory

The Government reserves the right to utilize the Contractor's control testing laboratory and equipment to make assurance tests and to check the Contractor's testing procedures, techniques, and test results at no additional cost to the Government.

3.7.4 Furnishing or Transportation of Samples for Testing

Costs incidental to the transportation of samples or materials shall be borne by the Contractor. Samples of materials for test verification and acceptance testing by the Government shall be delivered to the Materials Testing Center (MTC), US Army Engineer Research and Development Center (ERDC), f.o.b., at the following address:

For delivery by mail: Commander and Director
Engineering and Research Development Center
Attn: CEERD-GS-E
3909 Halls Ferry Road
Vicksburg, MS 39180-6199

For other deliveries: Commander and Director
Engineering and Research Development Center
Attn: CEERD-GS-E
3909 Halls Ferry Road
Vicksburg, MS 39180-6199

Coordination for each specific test, exact delivery location, and dates will be made through the Area Office.

3.8 COMPLETION INSPECTION

3.8.1 Punch-Out Inspection

Near the completion of all work or any increment thereof established by a completion time stated in the Special Clause entitled "Commencement, Prosecution, and Completion of Work," or stated elsewhere in the specifications, the CQC System Manager shall conduct an inspection of the work and develop a punch list of items which do not conform to the approved drawings and specifications. Such a list of deficiencies shall be included in the CQC documentation, as required by paragraph DOCUMENTATION below, and shall include the estimated date by which the deficiencies will be corrected. The CQC System Manager or staff shall make a second inspection to ascertain that all deficiencies have been corrected. Once this is accomplished, the Contractor shall notify the Government that the facility is ready for the Government Pre-Final inspection.

3.8.2 Pre-Final Inspection

The Government will perform this inspection to verify that the facility is complete and ready to be occupied. A Government Pre-Final Punch List may be developed as a result of this inspection. The Contractor's CQC System Manager shall ensure that all items on this list have been corrected before notifying the Government so that a Final inspection with the customer can be scheduled. Any items noted on the Pre-Final inspection shall be corrected in a timely manner. These inspections and any deficiency corrections required by this paragraph shall be accomplished within the time slated for completion of the entire work or any particular increment thereof if the project is divided into increments by separate completion dates.

3.8.3 Final Acceptance Inspection

The Contractor's Quality Control Inspection personnel, plus the superintendent or other primary management person, and the Contracting Officer's Representative shall be in attendance at this inspection. Additional Government personnel including, but not limited to, those from Base/Post Civil Facility Engineer user groups, and major commands may also be in attendance. The final acceptance inspection will be formally scheduled by the Contracting Officer based upon results of the Pre-Final inspection. Notice shall be given to the Contracting Officer at least 14 days prior to the final acceptance inspection and shall include the Contractor's assurance that all specific items previously identified to the Contractor as being unacceptable, along with all remaining work performed under the contract, will be complete and acceptable by the date scheduled for the final acceptance inspection. Failure of the Contractor to have all contract work acceptably complete for this inspection will be cause for the Contracting Officer to bill the Contractor for the Government's additional inspection cost in accordance with the contract clause titled "Inspection of Construction".

3.9 DOCUMENTATION

The Contractor shall maintain current records providing factual evidence that required quality control activities and/or tests have been performed. These records shall include the work of subcontractors and suppliers and shall be on an acceptable form that includes, as a minimum, the following information:

a. Contractor/subcontractor and their area of responsibility.

b. Operating plant/equipment with hours worked, idle, or down for repair.

c. Work performed each day, giving location, description, and by whom. When Network Analysis (NAS) is used, identify each phase of work performed each day by NAS activity number.

d. Test and/or control activities performed with results and references to specifications/drawings requirements. The control phase should be identified (Preparatory, Initial, Follow-up). List deficiencies noted along with corrective action.

e. Quantity of materials received at the site with statement as to acceptability, storage, and reference to specifications/drawings requirements.

f. Submittals reviewed, with contract reference, by whom, and action taken.

g. Off-site surveillance activities, including actions taken.

h. Job safety evaluations stating what was checked, results, and instructions or corrective actions.

i. Instructions given/received and conflicts in plans and/or specifications.

j. Contractor's verification statement.

These records shall indicate a description of trades working on the project; the number of personnel working; weather conditions encountered; and any delays encountered. These records shall cover both conforming and deficient features and shall include a statement that equipment and materials incorporated in the work and workmanship comply with the contract. The original and one copy of these records in report form shall be furnished to the Contracting Officer's Representative on the first day following the date(s) covered by the report, except that reports need not be submitted for days on which no work is performed. As a minimum, one report shall be prepared and submitted for every 7 days of no work and on the last day of a no work period. All calendar days shall be accounted for throughout the life of the contract. The first report following a day of no work shall be for that day only. Reports shall be signed and dated by the CQC System Manager. The report from the CQC System Manager shall include copies of test reports and copies of reports prepared by all subordinate quality control personnel.

3.10 SAMPLE FORMS

Sample forms enclosed at the end of this section.

3.11 NOTIFICATION OF NONCOMPLIANCE

The Contracting Officer will notify the Contractor of any detected noncompliance with the foregoing requirements. The Contractor shall take immediate corrective action after receipt of such notice. Such notice, when delivered to the Contractor at the work site, shall be deemed sufficient for the purpose of notification. If the Contractor fails or refuses to comply promptly, the Contracting Officer may issue an order stopping all or part of the work until satisfactory corrective action has been taken. No part of the time lost due to such stop orders shall be made the subject of claim for extension of time or for excess costs or damages by the Contractor.

_____
(FIRM NAME)

DAILY QUALITY CONTROL REPORT

Daily Report No.: _____ DATE: _____
Contract No. _____
Project Title & Location:
_____
Weather: ____ Precipitation: _____ in. _____ Temp:____ Min. ____ Max. ____

1. Contract/Subcontractors and Area of Responsibility:

NUMBER:	TRADE	HOURS	EMPLOYER	LOCATION/DESCRIPTION WORK

2. Operating Plant or Equipment. (Not hand tools)

Plant/Equipment	Date of Arrival/Departure	Date of Safety Check	Hours Used	Hours Idle	Hours Repair

3. Work Performed Today: (Indicate location and description of work performed by prime and/or subcontractors. When network analysis is used, identify work by NAS activity number).

4. Control Activities Performed:
   Preparatory Inspections: (Identify feature of work and attach minutes).
   Initial Inspections: (Identify feature of work and attach minutes).
   Follow-Up Inspections: (List inspections performed, results of inspection compared to specification requirements, and corrective actions taken when deficiencies are noted).

5. Tests Performed and Test Results: (Identify test requirement by paragraph number in specifications and/or sheet number in plans).

6. Material Received: (Note inspection results and storage provided).

7. Submittals Reviewed:

(a) Submittal No.	(b) Spec/Plan Reference	(c) By Whom	(d) Action

8. Offsite Surveillance Activities, Including Action Taken:

9. Job Safety: (List items checked, results, instructions and corrective actions taken).

10. Remarks: (Instructions received or given. Conflict(s) in Plans and/or specifications. Delays encountered.).

Contractor's Verification: On behalf of the Contractor, I certify this report is complete and correct, and all materials and equipment used and work performed during this reporting period are in compliance with the contract plans and specifications, to the best of my knowledge, except as may be noted above.

CQC System Manager Date

-- End of Section --

SECTION TABLE OF CONTENTS

DIVISION 01 - GENERAL REQUIREMENTS

SECTION 01550

MEASUREMENT AND PAYMENT

6/2000

PART 1 SCOPE

PART 2 GENERAL

PART 3 LUMP SUM ITEMS

3.1 Quantities
3.2 Interim Payments

PART 4 STONE FOR RIPRAP (RIPRAP TYPE A)

4.1 Work Included
4.2 Measurement
4.3 Payment

PART 5 STONE FOR RIPRAP (RIPRAP TYPE B)

5.1 Work Included
5.2 Measurement
5.3 Payment

PART 6 STONE FOR RIPRAP (RIPRAP TYPE C)

6.1 Work Included
6.2 Measurement
6.3 Payment

PART 7 STONE FOR RIPRAP (RIPRAP TYPE D)

7.1 Work Included
7.2 Measurement
7.3 Payment

PART 8 SPALLS

8.1 Work Included
8.2 Measurement
8.3 Payment

PART 9 BEDDING FOR RIPRAP TYPE A

9.1 Work Included
9.2 Measurement
9.3 Payment

PART 10 BEDDING FOR RIPRAP TYPE B, C & D

10.1 Work Included
10.2 Measurement
10.3 Payment

PART 11 6" GRANULAR SURFACING

11.1 Work Included
11.2 Measurement
11.3 Payment

PART 12 EXCAVATION

12.1 Work Included
12.2 Measurement
12.3 Payment

PART 13 COMPACTED RANDOM BACKFILL

13.1 Work Included
13.2 Measurement
13.3 Payment

PART 14 ENTIRE WORK COMPLETE, FOR DEFORMATION SURVEYS/MONITORING (SPECIFICATION SECTION 02011)

14.1 Work Included
14.2 Measurement
14.3 Payment

PART 15 ENTIRE WORK COMPLETE, FOR GATEWELL & STILLING BASIN

15.1 Work Included
15.2 Measurement
15.3 Payment

PART 16 ENTIRE WORK COMPLETE, FOR HAMILTON BLVD. LEFT BANK RETAINING WALL

16.1 Work Included
16.2 Measurement
16.3 Payment

PART 17 ENTIRE WORK COMPLETE, FOR HAMILTON BLVD. RIGHT BANK RETAINING WALL

17.1 Work Included
17.2 Measurement
17.3 Payment

PART 18 ENTIRE WORK COMPLETE, FOR RETAINING WALL AT MARKET PLACE MALL

18.1 Work Included
18.2 Measurement
18.3 Payment

PART 19 ENTIRE WORK COMPLETE, FOR CLIFTON AVE. BOX CULVERT

19.1 Work Included
19.2 Measurement
19.3 Payment

PART 20 ENTIRE WORK COMPLETE, FOR STORM DRAINS (SHTS. C7.01-C7.08 PROFILE LINES 1-49 & SHTS. C7.09-C7.11 PROFILES P-001 THRU P-006, P-011, P-012, & P-027 THRU P-029)

20.1 Work Included
20.2 Measurement
20.3 Payment

PART 21 ENTIRE WORK COMPLETE, FOR WATER MAINS AND SANITARY SEWERS

21.1 Work Included
21.2 Measurement
21.3 Payment

PART 22 ENTIRE WORK COMPLETE, FOR STORM SEWERS (SHTS. C7.09-C7.11 PROFILES P-007 THRU P-010, P-013, P-016 THRU P-020, P-16A, P-17A, P-022, & P-024 THRU P-026)

22.1 Work Included
22.2 Measurement
22.3 Payment

PART 23 ENTIRE WORK COMPLETE, FOR PORTLAND CEMENT CONCRETE PAVEMENT

23.1 Work Included
23.2 Measurement
23.3 Payment

PART 24 ENTIRE WORK COMPLETE, FOR TRAFFIC SIGNS AND PAVEMENT MARKINGS

24.1 Work Included
24.2 Measurement
24.3 Payment

PART 25 ENTIRE WORK COMPLETE, FOR SIDEWALKS AND APRONS

25.1 Work Included
25.2 Measurement
25.3 Payment

PART 26 ALL REMAINING WORK

26.1 Work Included
26.2 Measurement
26.3 Payment

PART 27 ENTIRE WORK COMPLETE, FOR RETAINING WALL AT BOWLING ALLEY

27.1 Work Included
27.2 Measurement
27.3 Payment

PART 28 ALL REMAINING WORK (FOR CONTRACT OPTION CONSTRUCTION BASED ON LIMITS INDICATED)

28.1 Work Included
28.2 Measurement
28.3 Payment

-- End of Section Table of Contents --

SECTION 01550

MEASUREMENT AND PAYMENT
6/2000

PART 1 SCOPE

This section covers the methods and procedures which will be used to measure the Contractor's work and to effect payment.

PART 2 GENERAL

The general outline of the principal features of each item as listed does not in any way limit the responsibility of the Contractor for making a thorough investigation of the drawings and specifications to determine the scope of work under the entire contract. Payment to the Contractor of the amounts based on the quantities of work as measured in accordance with the specified methods of measurement and the prices stipulated in the accepted proposal will constitute complete compensation for all work shown on the drawings, provided in the specifications or other contract documents and all costs of accepting the general risks, liabilities and obligations expressed or implied. Payment under all items shall include, but not necessarily be limited to, compensation for furnishing all supervision, labor, equipment, and materials and services (including overhead and profit), as well as performing all work required to accomplish and complete the work specified under each item and all other work required.

PART 3 LUMP SUM ITEMS

3.1 Quantities

The quantities under lump sum items will not be measured except for the purpose of determining reasonable interim payments.

3.2 Interim Payments

Interim payments will be made in accordance with the estimated value of work done as determined by the Contracting Officer or as specified in this section, and in accordance with contract clause for payments.

PART 4 STONE FOR RIPRAP (RIPRAP TYPE A)

4.1 Work Included

The work of this item shall include but not be limited to labor, equipment, materials, gradation testing, and performing all operations in connection with furnishing, transporting, and placing riprap as required by the drawings and specifications. Placement of compacted random backfill to construct the channel bottom above each riprap toe is considered to be incidental to the placement of the riprap.

4.2 Measurement

Per Ton. Riprap material will be measured for payment by the number of

tons satisfactorily placed as specified. The riprap material shall be weighed: (1) on public or private scales which have been certified by the State. The Contractor shall furnish the Government Inspector a copy of each printed weigh bill when self printing scales are used, or a copy signed by a public or bonded weighmaster as each load is delivered; or (2) riprap material may be weighed on the Contractor-furnished scales under the supervision of the Government Inspector. Each printed weigh bill shall contain the following: date, unit number, time of gross, tare and net weight, name of project, contractor, contract number and signature of bonded weighmaster. All riprap material shall be weighed to the nearest 20 pounds and the net weight reduced to the nearest hundredth of a ton.

4.3 Payment

Payment for "Stone for Riprap (Riprap Type A)" shall be based on the unit price per ton as indicated on the Bidding Schedule multiplied by the number of tons needed to complete the required work according to the drawings and specifications.

PART 5 STONE FOR RIPRAP (RIPRAP TYPE B)

5.1 Work Included

The work of this item shall include but not be limited to labor, equipment, materials, gradation testing, and performing all operations in connection with furnishing, transporting, and placing riprap as required by the drawings and specifications. Placement of compacted random backfill to construct the channel bottom above each riprap toe is considered to be incidental to the placement of the riprap.

5.2 Measurement

Per Ton. Riprap material will be measured for payment by the number of tons satisfactorily placed as specified. The riprap material shall be weighed: (1) on public or private scales which have been certified by the State. The Contractor shall furnish the Government Inspector a copy of each printed weigh bill when self printing scales are used, or a copy signed by a public or bonded weighmaster as each load is delivered; or (2) riprap material may be weighed on the Contractor-furnished scales under the supervision of the Government Inspector. Each printed weigh bill shall contain the following: date, unit number, time of gross, tare and net weight, name of project, contractor, contract number and signature of bonded weighmaster. All riprap material shall be weighed to the nearest 20 pounds and the net weight reduced to the nearest hundredth of a ton.

5.3 Payment

Payment for "Stone for Riprap (Riprap Type B)" shall be based on the unit price per ton as indicated on the Bidding Schedule multiplied by the number of tons needed to complete the required work according to the drawings and specifications.

PART 6 STONE FOR RIPRAP (RIPRAP TYPE C)

6.1 Work Included

The work of this item shall include but not be limited to labor, equipment, materials, gradation testing, and performing all operations in connection with furnishing, transporting, and placing riprap as required by the

drawings and specifications. Placement of compacted random backfill to construct the channel bottom above each riprap toe is considered to be incidental to the placement of the riprap.

6.2 Measurement

Per Ton. Riprap material will be measured for payment by the number of tons satisfactorily placed as specified. The riprap material shall be weighed: (1) on public or private scales which have been certified by the State. The Contractor shall furnish the Government Inspector a copy of each printed weigh bill when self printing scales are used, or a copy signed by a public or bonded weighmaster as each load is delivered; or (2) riprap material may be weighed on the Contractor-furnished scales under the supervision of the Government Inspector. Each printed weigh bill shall contain the following: date, unit number, time of gross, tare and net weight, name of project, contractor, contract number and signature of bonded weighmaster. All riprap material shall be weighed to the nearest 20 pounds and the net weight reduced to the nearest hundredth of a ton.

6.3 Payment

Payment for "Stone for Riprap (Riprap Type C)" shall be based on the unit price per ton as indicated on the Bidding Schedule multiplied by the number of tons needed to complete the required work according to the drawings and specifications.

PART 7 STONE FOR RIPRAP (RIPRAP TYPE D)

7.1 Work Included

The work of this item shall include but not be limited to labor, equipment, materials, gradation testing, and performing all operations in connection with furnishing, transporting, and placing riprap as required by the drawings and specifications.

7.2 Measurement

Per Ton. Riprap material will be measured for payment by the number of tons satisfactorily placed as specified. The riprap material shall be weighed: (1) on public or private scales which have been certified by the State. The Contractor shall furnish the Government Inspector a copy of each printed weigh bill when self printing scales are used, or a copy signed by a public or bonded weighmaster as each load is delivered; or (2) riprap material may be weighed on the Contractor-furnished scales under the supervision of the Government Inspector. Each printed weigh bill shall contain the following: date, unit number, time of gross, tare and net weight, name of project, contractor, contract number and signature of bonded weighmaster. All riprap material shall be weighed to the nearest 20 pounds and the net weight reduced to the nearest hundredth of a ton.

7.3 Payment

Payment for "Stone for Riprap (Riprap Type D)" shall be based on the unit price per ton as indicated on the Bidding Schedule multiplied by the number of tons needed to complete the required work according to the drawings and specifications.

PART 8 SPALLS

8.1 Work Included

The work of this item shall include but not be limited to labor, equipment, materials, gradation testing, and performing all operations in connection with furnishing, transporting, and placing spalls as required by the drawings and specifications.

8.2 Measurement

Per Ton. Spalls material will be measured for payment by the number of tons satisfactorily placed as specified. The spalls material shall be weighed: (1) on public or private scales which have been certified by the State. The Contractor shall furnish the Government Inspector a copy of each printed weigh bill when self printing scales are used, or a copy signed by a public or bonded weighmaster as each load is delivered; or (2) spalls material may be weighed on the Contractor-furnished scales under the supervision of the Government Inspector. Each printed weigh bill shall contain the following: date, unit number, time of gross, tare and net weight, name of project, contractor, contract number and signature of bonded weighmaster. All spalls material shall be weighed to the nearest 20 pounds and the net weight reduced to the nearest hundredth of a ton.

8.3 Payment

Payment for "Spalls" shall be based on the unit price per ton as indicated on the Bidding Schedule multiplied by the number of tons needed to complete the required work according to the drawings and specifications.

PART 9 BEDDING FOR RIPRAP TYPE A

9.1 Work Included

The work of this item shall include but not be limited to labor and equipment necessary for furnishing, gradation testing, transporting, and placing bedding material as required by the drawings and specifications.

9.2 Measurement

Per Ton. Bedding material will be measured for payment by the number of tons satisfactorily placed as specified. The bedding material shall be weighed: (1) on public or private scales which have been certified by the State. The Contractor shall furnish the Government Inspector a copy of each printed weigh bill when self printing scales are used, or a copy signed by a public or bonded weighmaster as each load is delivered; or (2) bedding material may be weighed on the Contractor-furnished scales under the supervision of the Government Inspector. Each printed weigh bill shall contain the following: date, unit number, time of gross, tare and net weight, name of project, contractor, contract number and signature of bonded weighmaster. All bedding material shall be weighed to the nearest 20 pounds and the net weight reduced to the nearest hundredth of a ton.

9.3 Payment

Payment for "Bedding for Riprap Type A" shall be based on the unit price per ton as indicated on the Bidding Schedule multiplied by the number of tons needed to complete the required work according to the drawings and specifications.

PART 10 BEDDING FOR RIPRAP TYPE B, C & D

10.1 Work Included

The work of this item shall include but not be limited to labor and equipment necessary for furnishing, gradation testing, transporting, and placing bedding material as required by the drawings and specifications.

10.2 Measurement

Per Ton. Bedding material will be measured for payment by the number of tons satisfactorily placed as specified. The bedding material shall be weighed: (1) on public or private scales which have been certified by the State. The Contractor shall furnish the Government Inspector a copy of each printed weigh bill when self printing scales are used, or a copy signed by a public or bonded weighmaster as each load is delivered; or (2) bedding material may be weighed on the Contractor-furnished scales under the supervision of the Government Inspector. Each printed weigh bill shall contain the following: date, unit number, time of gross, tare and net weight, name of project, contractor, contract number and signature of bonded weighmaster. All bedding material shall be weighed to the nearest 20 pounds and the net weight reduced to the nearest hundredth of a ton.

10.3 Payment

Payment for "Bedding for Riprap Type B, C & D" shall be based on the unit price per ton as indicated on the Bidding Schedule multiplied by the number of tons needed to complete the required work according to the drawings and specifications.

PART 11 6" GRANULAR SURFACING

11.1 Work Included

The work of this item shall include but not be limited to labor and equipment necessary for furnishing, gradation testing, transporting, and placing 6" granular surfacing material as required by the drawings and specifications.

11.2 Measurement

Per Ton. Granular surfacing material will be measured for payment by the number of tons satisfactorily placed as specified. The granular surfacing material shall be weighed: (1) on public or private scales which have been certified by the State. The Contractor shall furnish the Government Inspector a copy of each printed weigh bill when self printing scales are used, or a copy signed by a public or bonded weighmaster as each load is delivered; or (2) granular surfacing material may be weighed on the Contractor-furnished scales under the supervision of the Government Inspector. Each printed weigh bill shall contain the following: date, unit number, time of gross, tare and net weight, name of project, contractor, contract number and signature of bonded weighmaster. All granular surfacing material shall be weighed to the nearest 20 pounds and the net weight reduced to the nearest hundredth of a ton.

11.3 Payment

Payment for "6-in. Granular Surfacing" shall be based on the unit price per ton as indicated on the Bidding Schedule multiplied by the number of tons

needed to complete the required work according to the drawings and specifications.

PART 12 EXCAVATION

12.1 Work Included

The work of this item shall include but not be limited to furnishing all materials, equipment, and labor necessary to complete excavation, including stripping, for the new Perry Creek channel as indicated in the specifications and shown on the drawings. Excavation includes the loading and hauling of the stripped and excavated materials to construction, stockpile, and disposal areas. Other stripping and excavation areas are not included in this bid item. Stripping and excavation for construction of the Hamilton Blvd. right and left bank retaining walls and retaining wall at the Market Place Mall beyond the channel limits shown on the drawings shall be incidental to those structures and paid for under item "Entire Work Complete" for those structures. Stripping and excavation for construction of the gatewell & stilling basin, Clifton Ave. box culvert, and storm drain & sewer structures beyond the channel limits shown on the drawings shall be incidental to those structures and paid for under item "Entire Work Complete" for those structures. Stripping and excavation for water mains and sanitary sewers, roadway, and sidewalk & apron construction shall be paid for under the applicable "Entire Work Complete" item. Stripping and excavation for demolition work shall be paid for under item "All Remaining Work."

12.2 Measurement

Per Cubic Yard. Measured for payment using the average end area method from surveys taken. Initial surveys will be made of stripping and excavation areas. Measurement of excavation will include the total volume of material computed by the average end area method between the sufaces established by initial survey of the ground surface prior to authorized stripping and excavation operations, and the surfaces of completed stripping and excavation as approved. The measurement will not include the yardage of material excavated without authorization beyond the normal slopes and lines or the yardage of material used for purposes other than those shown or directed. The measurement of excavation will not include excavation of water or other liquid, but will include excavation of mud, muck, or similar semisolid material that had not been disturbed by the Contractor and cannot be drained away. The measurement of excavation will also include overbreakage due to slides which were not caused by yhe carelessness of the Contractor, and authorized excavation of unsuitable foundation soils.

12.3 Payment

Payment for excavation shall be based on the unit price per cubic yard indicated on the bidding schedule, times the number of cubic yards of excavated material.

PART 13 COMPACTED RANDOM BACKFILL

13.1 Work Included

The work of this item shall include but not be limited to furnishing all materials, equipment, and labor necessary to complete compacted random backfill areas for the new Perry Creek channel as indicated in the

specifications and shown on the drawings. Compacted random backfill includes hauling from stockpile or borrow locations, spreading, compaction, water for compaction, and all other necessary operations to shape and build the compacted random backfill areas as shown on the drawings and specified. Other compacted random backfill areas are not included in this bid item. Compacted random backfill for construction of the Hamilton Blvd. right and left bank retaining walls and retaining wall at the Market Place Mall beyond the channel limits shown on the drawings shall be incidental to those structures and paid for under item "Entire Work Complete" for those structures. Compacted random backfill for construction of the gatewell & stilling basin, Clifton Ave. box culvert, and storm drain & sewer structures beyond the channel limits shown on the drawings shall be incidental to those structures and paid for under item "Entire Work Complete" for those structures. Compacted random backfill for water mains and sanitary sewers, roadway, and sidewalk & apron construction shall be paid for under the applicable "Entire Work Complete" item. Compacted random backfill for demolition work shall be paid for under item "All Remaining Work."

13.2 Measurement

Per Cubic Yard. Measured for payment using the average end area method from surveys taken. Initial surveys will be made of all compacted random backfill areas. Measurement of compacted random backfill will include the total volume of material computed by the average end area method between the sufaces established by initial survey of the ground surface prior to compacted random backfill placement and again after compacted random backfill operations are completed to the finished lines and grades as shown on the drawings. The measurement will not include the yardage of material placed without authorization beyond the normal slopes and lines or the yardage of material used for purposes other than those shown or directed.

13.3 Payment

Payment for compacted random backfill shall be based on the unit price per cubic yard, times the number of cubic yards placed.

PART 14 ENTIRE WORK COMPLETE, FOR DEFORMATION SURVEYS/MONITORING (SPECIFICATION SECTION 02011)

14.1 Work Included

The work of this item shall include but not be limited to furnishing all materials, equipment and labor necessary to complete the required deformation surveys and monitoring as indicated in Section 02011 of the specifications.

14.2 Measurement

Lump sum.

14.3 Payment

Payment for "Entire Work Complete, for Deformation Surveys/Monitoring" shall be lump sum bid, on a progressive basis, based on the percentage of work completed.

PART 15 ENTIRE WORK COMPLETE, FOR GATEWELL & STILLING BASIN

15.1 Work Included

The work of this item shall include but not be limited to furnishing all materials, equipment and labor necessary to construct the gatewell and stilling basin, including all incidental and customarily performed work necessary for formwork, placing, and curing concrete, and placing rebar. This work item also includes flap gate installation, fabricated metals and appurtenant parts, control of water, subgrade preparation, placement and compaction of granular backfill, and construction for connection to existing storm drain pipe, as indicated in the specifications and shown on the drawings. Excavation and backfill for construction of the gatewell & stilling basin beyond the channel excavation limits shown on the drawings shall be incidental to construction of the gatewell & stilling basin and paid for under this bid item. The work does not include furnishing and installing riprap, spalls, and bedding. Costs for these items shall be included in the applicable price per ton of bid items Nos. 3, 4, and 6.

15.2 Measurement

Lump sum.

15.3 Payment

Payment for this item shall be lump sum bid, on a progressive basis, based on the percentage of work completed.

PART 16 ENTIRE WORK COMPLETE, FOR HAMILTON BLVD. LEFT BANK RETAINING WALL

16.1 Work Included

The work of this item shall include but not be limited to furnishing all materials, equipment and labor necessary to construct the Hamilton Blvd. Left Bank Retaining Wall as indicated in the specifications and shown on the drawings.

16.2 Measurement

Lump sum.

16.3 Payment

Payment for "Entire Work Complete, for Hamilton Blvd. Left Bank Retaining Wall" shall be lump sum bid, on a progressive basis, based on the percentage of work completed.

PART 17 ENTIRE WORK COMPLETE, FOR HAMILTON BLVD. RIGHT BANK RETAINING WALL

17.1 Work Included

The work of this item shall include but not be limited to furnishing all materials, equipment and labor necessary to construct the Hamilton Blvd. Right Bank Retaining Wall as indicated in the specifications and shown on the drawings.

17.2 Measurement

Lump sum.

17.3 Payment

Payment for "Entire Work Complete, for Hamilton Blvd. Right Bank Retaining Wall" shall be lump sum bid, on a progressive basis, based on the percentage of work completed.

PART 18 ENTIRE WORK COMPLETE, FOR RETAINING WALL AT MARKET PLACE MALL

18.1 Work Included

The work of this item shall include but not be limited to furnishing all materials, equipment and labor necessary to construct the Retaining Wall at the Market Place Mall as indicated in the specifications and shown on the drawings.

18.2 Measurement

Lump sum.

18.3 Payment

Payment for "Entire Work Complete, for Retaining Wall at Market Place Wall" shall be lump sum bid, on a progressive basis, based on the percentage of work completed.

PART 19 ENTIRE WORK COMPLETE, FOR CLIFTON AVE. BOX CULVERT

19.1 Work Included

The work of this item shall include but not be limited to furnishing all materials, equipment and labor necessary to construct the Clifton Ave. box culvert, including all incidental and customarily performed work necessary for formwork, placing, and curing concrete, and placing rebar. The work for this item also includes subgrade preparation, placement and compaction of granular backfill, and subdrain construction, as indicated in the specifications and shown on the drawings. Excavation and backfill for construction of the box culvert beyond that required for the new Perry Creek channel excavation and backfill shown on the drawings shall be incidental to construction of the box culvert and paid for under this bid item. The work for this item does not include curb inlet or pavement construction at the box culvert. Costs for these items shall be included in bid items Nos. 16 and 17, respectively. The work for this item also does not include furnishing and installing riprap and bedding. Costs for these items shall be included in the applicable price per ton of bid items Nos. 1 and 6.

19.2 Measurement

Lump sum.

19.3 Payment

Payment for "Entire Work Complete, for Clifton Ave. Box Culvert" shall be lump sum bid, on a progressive basis, based on the percentage of work completed.

PART 20 ENTIRE WORK COMPLETE, FOR STORM DRAINS
(SHTS. C7.01-C7.08 PROFILE LINES 1-49 & SHTS. C7.09-C7.11

PROFILES P-001 THRU P-006, P-011, P-012, & P-027 THRU P-029)

20.1 Work Included

The work of this item shall include but not be limited to furnishing all materials, equipment and labor necessary to construct the storm drainage pipes and outlet structures, flap gates, timber piling, fabricated metals and appurtenant parts, control of water, removals, hydrostatic testing, joint testing, and incidental operation necessary to construct the complete drainage structure units according to the specifications and drawings (Shts. C7.01-C7.08 Profile Lines 1-49 & Shts. C7.09-C7.11 Profiles P-001 thru P-006, P-011, P-012, & P-027 thru P-029). The work for this item does not include furnishing and installing riprap, spalls, and bedding. Costs for these items shall be included in the applicable price per ton of bid items Nos. 1 thru 7. The work for this item also does not include storm drainage pipe that are, in general, located outside the new Perry Creek channel limits. Costs for furnishing and installing pipe, area inlets or curb inlets, etc. located outside of the new Perry Creek channel limits, shall be included in the lump sum price of bid item No. 19, "Entire Work Complete, for Storm Sewers." Excavation and backfill for construction of the storm drains beyond that required for the new Perry Creek channel excavation and backfill shown on the drawings shall be incidental to construction of the storm drains and paid for under this bid item.

20.2 Measurement

Lump sum.

20.3 Payment

Payment for "Entire Work Complete, for Storm Drains" shall be lump sum bid, on a progressive basis, based on the percentage of work completed.

PART 21 ENTIRE WORK COMPLETE, FOR WATER MAINS AND SANITARY SEWERS

21.1 Work Included

The work of this item shall include but not be limited to furnishing all materials, equipment and labor necessary to install new water mains and sanitary sewers, including all incidental and customarily performed work necessary for removing, disposing and replacing of water mains and sanitary sewers, as indicated in the specifications and shown on the drawings. The work for this item includes connections to and capping of existing water mains and plugging of existing sanitary sewers.

21.2 Measurement

Lump sum.

21.3 Payment

Payment for "Entire Work Complete, for Water Mains and Sanitary Sewers" shall be lump sum bid, on a progressive basis, based on the percentage of work completed.

PART 22 ENTIRE WORK COMPLETE, FOR STORM SEWERS
(SHTS. C7.09-C7.11 PROFILES P-007 THRU P-010, P-013, P-016 THRU P-020, P-16A, P-17A, P-022, & P-024 THRU P-026)

22.1 Work Included

The work of this item shall include but not be limited to furnishing all materials, equipment and labor necessary to construct the storm sewers as indicated in the specifications and shown on the drawings (Shts. C7.09-C7.11 Profiles P-007 thru P-010, P-013, P-016 thru P-020, P-16A, P-17A, P-022, & P-024 thru P-026). Costs for furnishing and installation of storm drainage pipes, flap gates, timber piling, etc., which are generally located inside the new Perry Creek channel limits, shall be included in the lump sum price of bid item No. 17, "Entire Work Complete, for Storm Drains."

22.2 Measurement

Lump sum.

22.3 Payment

Payment for "Entire Work Complete, for Storm Sewers" shall be lump sum bid, on a progressive basis, based on the percentage of work completed.

PART 23 ENTIRE WORK COMPLETE, FOR PORTLAND CEMENT CONCRETE PAVEMENT

23.1 Work Included

The work of this item shall include but not be limited to furnishing all materials, equipment and labor necessary to construct portland cement concrete pavement, including all incidental and customarily performed work necessary for formwork, placing, and curing concrete pavement, as indicated in the specifications and shown on the drawings. The work for this item includes subgrade preparation for the portland cement concrete pavement. The work for this item does not include furnishing and installing area inlets and curb inlets. Costs for these items shall be included in the lump sum price of bid items Nos. 17 and 19.

23.2 Measurement

Lump sum.

23.3 Payment

Payment for "Entire Work Complete, for Portland Cement Concrete Pavement" shall be lump sum bid, on a progressive basis, based on the percentage of work completed.

PART 24 ENTIRE WORK COMPLETE, FOR TRAFFIC SIGNS AND PAVEMENT MARKINGS

24.1 Work Included

The work of this item shall include but not be limited to furnishing all materials, equipment and labor necessary to install permanent traffic signs and pavement markings, as indicated in the specifications and shown on the drawings.

24.2 Measurement

Lump sum.

24.3 Payment

Payment for "Entire Work Complete, for Traffic Signs and Pavement Markings" shall be lump sum bid, on a progressive basis, based on the percentage of work completed.

PART 25 ENTIRE WORK COMPLETE, FOR SIDEWALKS AND APRONS

25.1 Work Included

The work of this item shall include but not be limited to furnishing all materials, equipment and labor necessary for construction of sidewalks and aprons, including all incidental and customarily performed work necessary for providing proper surface water drainage at sidewalks and aprons and all incidental and customarily performed work necessary for formwork, placing, and curing concrete, as indicated in the specifications and shown on the drawings.

25.2 Measurement

Lump sum.

25.3 Payment

Payment for "Entire Work Complete, for Sidewalks and Aprons" shall be lump sum bid, on a progressive basis, based on the percentage of work completed.

PART 26 ALL REMAINING WORK

26.1 Work Included

The work of this item shall include but not be limited to furnishing all materials, equipment and labor needed to complete all remaining work not covered under bid items No. 1 thru No. 22. All remaining work shall include specified work related to clearing & grubbing, removal of pavement and sidewalks, demolition of buildings (including removal of asbestos containing materials), removal of abandoned utilities, care of water, dewatering of subsurface soils to allow for and to maintain the integrity of the excavation, topsoiling, seeding & mulching, installation of turf reinforcement mat, planting trees and shrubs, disposal of materials, traffic control, construction of segmental concrete block gravity retaining walls, fencing, and any other work indicated in the specifications or shown on the drawings not included on the Bidding Schedule in bid items No. 1 thru No. 22.

26.2 Measurement

Lump sum.

26.3 Payment

Payment for "All Remaining Work" shall be the lump sum of the amount indicated for bid item No. 23 on the bidding schedule. Payment shall be made on a progressive basis that is based on the percentage of work completed.

OPTION 1

Work described in the Option 1 Bid Item involves constructing the New Perry Creek channel from the limits shown on Sheets G-15 and GP-3. This includes

construction of the Bowling Alley Retaining Wall in the option. Option 1 consists of bid items 1a through 1j, if the option is awarded it will be awarded as a whole, consisting of bid items 1a through 1j. Option 1 items 1a through 1h shall follow the measurement and payment listings above for that type of item. Option 1 items 1i and 1J are as follows:

PART 27 ENTIRE WORK COMPLETE, FOR RETAINING WALL AT BOWLING ALLEY

27.1 Work Included

The work of this item shall include but not be limited to furnishing all materials, equipment and labor necessary to construct the Retaining Wall at Bowling Alley as indicated in the specifications and shown on the drawings.

27.2 Measurement

Lump sum.

27.3 Payment

Payment for "Entire Work Complete, for Retaining Wall at Bowling Alley" shall be lump sum bid, on a progressive basis, based on the percentage of work completed.

PART 28 ALL REMAINING WORK
(FOR CONTRACT OPTION CONSTRUCTION
BASED ON LIMITS INDICATED)

28.1 Work Included

The work of this item shall include but not be limited to furnishing all materials, equipment and labor needed to complete all remaining work not covered under the option bid items No. 1 thru No. 9. All remaining work shall include specified work related to clearing & grubbing, removal of pavement and sidewalks, removal of abandoned utilities, care of water, dewatering of subsurface soils to allow for and to maintain the integrity of the excavation, topsoiling, seeding & mulching, installation of turf reinforcement mat, construction of Stone Park Blvd. road raise, planting trees and shrubs, channel cleanout, disposal of materials, traffic control, construction of concrete revetment, fencing, and any other work indicated in the specifications or shown on the drawings not included on the Bidding Schedule in bid items No. 1 thru No. 9.

28.2 Measurement

Lump sum.

28.3 Payment

Payment for "All Remaining Work" shall be the lump sum of the amount indicated for bid item No. 10 on the bidding schedule. Payment shall be made on a progressive basis that is based on the percentage of work completed.

-- End of Section --

SECTION TABLE OF CONTENTS

DIVISION 02 - SITE WORK

SECTION 02011

DEFORMATION SURVEYS/MONITORING

PART 1 GENERAL

1.1 SUMMARY
1.2 DEFINITIONS
1.3.1 Reference Points
1.3.2 Object Points
1.3 SUBMITTALS

PART 2 PRODUCTS

2.1 REFERENCE POINTS

PART 3 EXECUTION

3.1 STRUCTURES TO BE SURVEYED
3.1.1 Initial Readings
3.1.2 Weekly or Bi-Weekly Readings
3.2 STRUCTURES REQUIRING PHOTOGRAPHIC AND VIDEO TAPE DOCUMENTATION
3.3 REPORTING STRUCTURAL DISTRESS FOUND IN ADJOINING BUILDINGS AND SURROUNDING AREAS

-- End of Section Table of Contents --

SECTION 02011

DEFORMATION SURVEYS/MONITORING

PART 1 GENERAL

1.1 SUMMARY

The work covered by this section consists of furnishing all plant, labor, equipment, and materials, and performing all operations in connection with providing initial (baseline) and historical (during and post-construction) documentation of the structural condition of surrounding buildings and other areas in the vicinity of the new channel construction.

1.2 DEFINITIONS

1.3.1 Reference Points

Reference points shall consist of permanent survey monuments from which both horizontal and vertical movement can be detected for monitoring all structural object points. Reference points shall be "occupied" during the deformation survey. Reference points shall have long-term stability with respect to the areas surrounding them both horizontally and vertically.

1.3.2 Object Points

Object points (i.e., target points) shall consist of nails, bolts, or other permanent objects rigidly embedded or attached to concrete walls or other permanent structural features. The Contractor shall submit for approval the materials used, installation methods, and location of all object points. Object points are to be "monitored" during the deformation survey.

1.3 SUBMITTALS

Government approval is required for submittals with a "G" designation; submittals not having a "G" designation are for information only. When used, a designation following the "G" designation identifies the office that will review the submittal for the Government. The following shall be submitted in accordance with Section 01330 SUBMITTAL PROCEDURES:

SD-01 Preconstruction Submittals

Location, Type, and Installation Methods of Object Points; G-RE

Location of object points on all structures indicated for monitoring, the materials used for each object point, and the method of embedment or attachment to each structure. Object points shall be located on a 1"=50' or less scaled drawing.

Reference Point and/or Benchmark Locations; G-RE

Reference point and/or benchmark locations shall be selected by

the Contractor and submitted for approval. The Contractor shall provide a map or scale drawing showing the location of each reference point to be used. The Contractor shall provide a designation number and a description for each reference point or existing benchmark.

Photographic and Video Tape Documentation; G-RE

Photography and video taping for documenting the existing (pre-construction) structural condition of adjoining buildings and surrounding areas within the vicinity of the new channel work areas for all structures identified in Table 2 in paragraph 3.2 STRUCTURES REQUIRING PHOTOGRAPHIC AND VIDEO TAPE DOCUMENTATION. The photographs shall be encased in plastic holders and placed in 3-ring binders for easy viewing. Video tape shall be in VHS format.

SD-05 Design Data

Survey Readings; G-RE

Each set of initial, weekly, or bi-weekly reduced survey readings shall be submitted in a legible format to the Contracting Officer within 48 hours after completion of the survey.

PART 2 PRODUCTS

2.1 REFERENCE POINTS

Reference points shall be assigned State Plane Coordinates (Iowa State Plane Coordinate System/North Zone) or may be assigned arbitrary horizontal and vertical coordinates allowing relative horizontal and vertical movement to be detected. As a minimum, reference points shall consist of 1-inch diameter reinforcing bars, 10 feet in length within a 4-inch wide locked casing. The number of reference points and their locations shall be determined by the Contractor such that the required accuracy is obtained. The Contractor shall obtain all utility clearances and digging permits prior to reference point installation. Existing benchmarks may be used as reference points provided the Contractor submits data proving installation requirements equal or exceed those for new reference points. Reference point locations shall be submitted for approval.

PART 3 EXECUTION

3.1 STRUCTURES TO BE SURVEYED

The Contractor shall obtain horizontal and vertical displacement readings of all object points on structures identified for monitoring in Table 1 below. A minimum of two object points shall be established per structure. Points shall be placed at building corners, if possible, and shall be placed along walls nearest to the excavation. Accuracy for all surveys shall be +/- 0.001 foot. Survey readings shall consist of initial, weekly, or bi-weekly readings.

TABLE 1
REQUIRED ADJOINING STRUCTURES

TO BE MONITORED FOR DEFORMATION

STRUCTURE:
1. Left bank building at channel Sta. 44+75
2. Right bank building at channel Sta. 48+40
3. Right bank building at channel Sta. 52+30
4. Right bank residence at channel Sta. 62+40
5. KFC (Kentucky Fried Chicken) Restaurant at channel Sta. 74+60 right bank
6. Electronics Storage building at channel Sta. 95+80 right bank (on W. 20th St. south side of street)
7. Left bank building at channel Sta. 105+40
8. Bowling Alley at channel Sta. 145+90 left bank
9. Nursing Home at channel Sta. 156+70 left bank (at start of project at Hamilton Blvd. & Stone Park Blvd.
10. Residence's detached garage at Plum Creek channel Sta. P150+75 right bank (south side of Clifton Avenue)
11. Residence's attached garage at Plum Creek channel Sta. P152+90 left bank (north side of Clifton Avenue)
12. Residence's attached garage at Plum Creek channel Sta. P153+30 right bank (north side of Clifton Avenue)

3.1.1 Initial Readings

Initial readings of all object points shall be obtained prior to any excavation activity in the vicinity of the structure.

3.1.2 Weekly or Bi-Weekly Readings

Object points shall be surveyed at regular weekly intervals until the excavation in the vicinity of the adjoining building is complete to required depths, and then bi-weekly following this period until structural backfill or wall construction is complete.

3.2 STRUCTURES REQUIRING PHOTOGRAPHIC AND VIDEO TAPE DOCUMENTATION

The Contractor is responsible for documenting the existing (pre-construction) structural condition of adjoining buildings and surrounding areas within the vicinity of the new channel work areas for all structures identified in Table 2 below. All existing cracking, settlement, and lateral displacements of adjoining buildings and surrounding areas shall be photographed and video taped for comparison with post-construction conditions. Good quality photography and video taping is required to assure legible documentation. Dated captions shall be provided for all photographs. The photographs shall be encased in plastic holders and placed in 3-ring binders for easy viewing. Video tape shall be in VHS format.

TABLE 2
ADJOINING STRUCTURES REQUIRING
PHOTOGRAPHIC AND VIDEO TAPE DOCUMENTATION

STRUCTURE:
1. Left bank building at channel Sta. 44+75
2. Right bank building at channel Sta. 48+40
3. Right bank building at channel Sta. 52+30
4. Right bank residence at channel Sta. 62+40
5. KFC (Kentucky Fried Chicken) Restaurant at channel Sta. 74+60 right bank
6. Phillips Kiln Company at channel Sta. 82+00 right bank (documentation

of parking/business lot only)
7. Electronics Storage building at channel Sta. 95+80 right bank (on W. 20th St. south side of street)
8. Left bank building at channel Sta. 105+40
9. Market Place Mall at channel Sta. 122+80 - 144+80 left bank (documentation of drive & parking areas behind mall buildings from W. 28th St. to bowling alley, no building documentation)
10. Bowling Alley at channel Sta. 145+90 left bank
11. Nursing Home at channel Sta. 156+70 left bank (at start of project at Hamilton Blvd. & Stone Park Blvd.
12. Residence's detached garage at Plum Creek channel Sta. P150+75 right bank (south side of Clifton Avenue)
13. Residence's attached garage at Plum Creek channel Sta. P152+90 left bank (north side of Clifton Avenue)
14. Residence's attached garage at Plum Creek channel Sta. P153+30 right bank (north side of Clifton Avenue)

3.3 REPORTING STRUCTURAL DISTRESS FOUND IN ADJOINING BUILDINGS AND SURROUNDING AREAS

All structural distress found or reported to have occurred in or on adjoining buildings or surrounding areas, regardless of severity, shall be immediately reported to the on site Government representative or to the Area Engineer.

-- End of Section --

SECTION TABLE OF CONTENTS

DIVISION 02 - SITE WORK

SECTION 02115A

UNDERGROUND STORAGE TANK REMOVAL

12/97

PART 1 GENERAL

1.1 SUMMARY
1.2 REFERENCES
1.3 DEFINITIONS
1.3.1 Purging
1.3.2 Ancillary Equipment
1.3.3 Phase
1.3.4 Residue/Sludge
1.3.5 Disposal
1.3.6 Work Plan
1.3.7 Inerting
1.3.8 Hazardous Waste
1.3.9 Special Waste
1.3.10 Tank Liquids
1.3.10.1 Product
1.3.10.2 Contaminated Water
1.3.10.3 Pumpable Liquids
1.4 SUBMITTALS
1.5 QUALIFICATIONS
1.5.1 Laboratory Services
1.5.2 Support Staff
1.6 REGULATORY REQUIREMENTS
1.6.1 Permits and Licenses
1.6.2 Statutes and Regulations
1.7 PROJECT/SITE CONDITIONS
1.7.1 Sequencing and Scheduling
1.7.2 Work Plan

PART 2 PRODUCTS

2.1 BACKFILL MATERIAL

PART 3 EXECUTION

3.1 GENERAL REQUIREMENTS
3.1.1 Safety Guidelines
3.1.2 Burning and Explosives
3.1.3 Protection of Existing Structures and Utilities
3.1.4 Shoring
3.2 TANK CONTENTS VERIFICATION
3.2.1 Sampling
3.2.2 Analysis
3.2.3 Characterization
3.3 CLEARING, GRUBBING AND REMOVALS
3.4 TOPSOIL

3.5 PREPARATIONS FOR EXCAVATION
3.5.1 Removal of Product, Pumpable Liquids, and Sludge
3.5.2 Pumpable Liquid and Contaminated Water Disposal
3.5.2.1 Pumpable Liquids Disposal
3.5.2.2 Contaminated Water
3.5.2.3 Treatment
3.6 PURGING AND INERTING
3.7 EXCAVATION
3.7.1 Exploratory Trenches
3.7.2 Tank Excavation
3.7.3 Piping Excavation
3.7.4 Open Excavations
3.7.5 Stockpiles
3.8 REMOVAL OF PIPING, ANCILLARY EQUIPMENT, AND TANK
3.8.1 Piping and Ancillary Equipment
3.8.2 Tank
3.8.3 Contaminated Soil, Tank and Piping Excavation Examination
3.9 TANK CLEANING
3.9.1 Exterior
3.9.2 Temporary Storage
3.9.3 Interior
3.10 SOIL EXAMINATION, TESTING, AND ANALYSIS
3.10.1 Tank Excavation Sampling Procedures
3.10.2 Stockpiled Material Sampling
3.10.3 Analysis
3.10.4 Groundwater Sampling, Testing, and Analysis
3.11 BACKFILLING
3.12 DISPOSAL REQUIREMENTS
3.12.1 Treatment, Disposal, and Recycling
3.12.2 Tank and Ancillary Equipment Disposal
3.12.3 Transportation of Wastes
3.12.4 Salvage Rights
3.12.5 Records
3.12.6 Hazardous/Special Waste Manifests
3.12.7 Documentation of Treatment or Disposal
3.13 SPILLS
3.14 TANK CLOSURE REPORT

-- End of Section Table of Contents --

SECTION 02115A

UNDERGROUND STORAGE TANK REMOVAL
12/97

PART 1 GENERAL

1.1 SUMMARY

This section contains specifications for removal of existing 5,000 gal tank and associated piping and ancillary equipment located at the Perry Creek Project Site (PH 4). The tank is located south of the former Exhibition Auto Body along McDonald Street as shown on the drawings. Where a release has occurred, overexcavation of petroleum contaminated soil to 10 ppm field headspace screening levels is required. Petroleum contaminated soil shall be transpoted to a designated landfarm in accordance to Iowa UST regulations. All work shall be performed within the requirements of Iowa Department of Natural Resources UST regulations. Sampling and testing requirements for the tank product, tank coatings, sludge, pumpable liquids, soil, and groundwater, shall be in accordance with Section 1450 CHEMICAL ANALYSIS AND CHEMICAL DATA QUALITY CONTROL.

1.2 REFERENCES

The publications listed below form a part of this section to the extent referenced. The publications are referenced in the text by basic designation only.

AMERICAN PETROLEUM INSTITUTE (API)

API Pub 2217A	(1997) Guidelines for Work in Inert Confined Spaces in the Petroleum Industry
API Pub 2219	(1999) Safe Operation of Vacuum Trucks in Petroleum Service, 2nd Edition
API RP 1604	(1996) Closure of Underground Petroleum Storage Tanks
API RP 2003	(1998) Protection Against Ignitions Arising out of Static, Lightning, and Stray Currents
API Std 2015	(1994) Safe Entry and Cleaning of Petroleum Storage Tanks

AMERICAN SOCIETY FOR TESTING AND MATERIALS (ASTM)

ASTM D 1556	(1990; R 1996el) Density and Unit Weight of Soil in Place by the Sand-Cone Method
ASTM D 1557	(1998) Laboratory Compaction Characteristics of Soil Using Modified

	Effort (56,000 ft-lbf/cu. ft. (2,700 kN-m/cu. m.))
ASTM D 2167	(1994) Density and Unit Weight of Soil in Place by the Rubber Balloon Method
ASTM D 2487	(1998) Classification of Soils for Engineering Purposes (Unified Soil Classification System)
ASTM D 2922	(1996el) Density of Soil and Soil-Aggregate in Place by Nuclear Methods (Shallow Depth)
ASTM D 3017	(1988; R 1996el) Water Content of Soil and Rock in Place by Nuclear Methods (Shallow Depth)

U.S. NATIONAL ARCHIVES AND RECORDS ADMINISTRATION (NARA)

40 CFR 261	Identification and Listing of Hazardous Waste
40 CFR 262	Standards Applicable to Generators of Hazardous Waste
40 CFR 264	Standards for Owners and Operators of Hazardous Waste Treatment, Storage, and Disposal Facilities
40 CFR 265	Interim Status Standards for Owners and Operators of Hazardous Waste Treatment, Storage, and Disposal Facilities
40 CFR 266	Standards for the Management of Specific Hazardous Wastes and Specific Types of Hazardous Waste Management Facilities
40 CFR 268	Land Disposal Restrictions
40 CFR 279	Standards for the Management of Used Oil
40 CFR 280	Technical Standards and Corrective Action Requirements for Owners and Operators of Underground Storage Tanks (UST)

1.3 DEFINITIONS

1.3.1 Purging

Continuous removal of flammable or toxic vapors from the interior of a tank to a safe level appropriate with the level of personal protective equipment (PPE) prescribed.

1.3.2 Ancillary Equipment

Ancillary equipment includes, but is not limited to dispensing equipment, pumps, piping, valves, vent tubes, and service piping associated with storage tanks.

1.3.3 Phase

A distinctly separate startified liquid or solid layer (s) of material contained within the tank.

1.3.4 Residue/Sludge

Solid or semisolid material, sludge, liquid or vapor remaining in the tank following removal of petroleum product the tank was designed to store.

1.3.5 Disposal

Means the discharge, deposit, injection, dumping, spilling, leaking, or placing of any solid waste or hazardous waste into or on any land or water so that such solid waste or hazardous waste or any constituent thereof may enter the environment or be emitted into the air or discharged into any waters, including ground waters.

1.3.6 Work Plan

The Contractor Comprehensive Plan for the complete process of tank removal. As a minimum the plan would include but not be limited to removal, cleaning, and ultimate disposal or salvage of the tanks, associated piping/hoses, their contents, and any contaminated materials.

1.3.7 Inerting

Continuous removal of flammable or toxic vapors from the interior of a tank by introducing an inert gas.

1.3.8 Hazardous Waste

Waste containing concentrations of chemical constituents above those listed in 40 CFR 261 of the EPA Resource Conservation and Recovery Act (RCRA).

1.3.9 Special Waste

Any industrial process waste, pollution control waste, or toxic waste which presents a threat to the human health, or the environment, or a waste with inherent properties which make the disposal of the waste in a landfill difficult to manage as defined in Iowa Land Quality and Waste Management Assistance Division, Solid Waste Permitting.

1.3.10 Tank Liquids

1.3.10.1 Product

A substance the tank was designed to store which remains a useful, non-waste, product.

1.3.10.2 Contaminated Water

Water encountered during excavation operation or dewatering or cleaning operations, containing concentrations of chemical constituents above regulatory levels which require special precautions and/or disposal methods. The Contractor shall properly dispose of or treat contaminated water. State action levels shall be satisfied when treating contaminated water.

1.3.10.3 Pumpable Liquids

Liquids remaining in the UST following removal of the product that the tanks were designed to store. This shall include the water generated from cleaning operations (rinsate). This also include the rinsate from ancillary equipment (piping).

1.4 SUBMITTALS

Government approval is required for submittals with a "G" designation; submittals not having a "G" designation are for information only. When used, a designation following the "G" designation identifies the office that will review the submittal for the Government. The following shall be submitted in accordance with Section 01330 SUBMITTAL PROCEDURES:

SD-03 Product Data

Work Plan; G-RE, .

The Work Plan within 10 days after notice to proceed. The Contractor shall allow 10 days in the schedule for the Government's review and approval. No adjustment for time or money will be made for resubmittals required as a result of noncompliance.

Qualifications; G-RE, .

A document indicating that the Contractor, State of Iowa Groundwater Professional, and State of Iowa Certified Well Contractor meet the specified requirements here in and in the State of Iowa Regulations.

Salvage Rights; FIO .

A record of the disposition of salvaged materials at the end of the contract.
Disposal Records; FIO.

Final copies of all disposal manifests, shipping papers, waste profiles and all associated paperwork

SD-06 Test Reports

Backfill Material; G-RE; .
Tank Contents Verification; G-RE, .
Contaminated Water Disposal; G-RE, .
Soil Examination, Testing, and Analysis; G-RE, .
Groundwater Temporary Monitoring Well or DPT Point installation and abandonment; G-RE.
Groundwater Sampling, Testing and Analysis; G-RE

Copies of all laboratory and field test reports.

Tank Closure Report; FIO .

10 copies of the report for each UST site opened, prepared in a standard 3-ring binder, within 14 days of completing work at each site. Each binder shall be labeled with contract number, project

name, location and tank number; each binder shall be indexed. . The report shall include all information required under the State of Iowa UST Regulations (tank closure) as detailed in Section IV of the Iowa Department of Natural Resources Guidance Document, "UST Closure Procedures for Tank and Piping Removal". The tank closure report shall also contain all information regarding overexcavation of contaminated soils, as conducted under the Expedite Corrective Action provision of Chapter 567-135.12 (11), Iowa UST Regulations. The report shall be prepared by or prepared under the direction of a State of Iowa 'Certified Groundwater Professional'.

1.5 QUALIFICATIONS

The Contractor shall have a minimum of 2 years of tank removal experience and shall be certified by the State of Iowa for tank removal work.The Contractor shall retain the services of the following State Certified persons: In accordance with Chapter 567-135.8 (2), Iowa Administrative Code, all assessment, corrective action, data analysis and report development must be conducted by or under the direct supervision of a State of Iowa 'Certified Groundwater Professional'. For groundwater monitoring well installation or direct push technology (DPT) groundwater sampling must be performed by a State of Iowa 'Certified Well Contractor' as required under 567-82 (455B),Iowa Administrative Code. A list of State of Iowa Certified groundwater professionals and certifed well contractors can be obtained from the Iowa Department of Natural Resources.

1.5.1 Laboratory Services

For laboratory services the Contractor shall be validated in accordance with state certification requirements and Section 01450 CHEMICAL DATA QUALITY CONTROL. A list of State of Iowa certified labs can be obtained from the Iowa Department of Natural Resources.

1.5.2 Support Staff

The Contractor shall identify all staff involved for the various components, including personnel collecting and shipping samples. The qualifications of these staff members shall be detailed by the Contractor.

1.6 REGULATORY REQUIREMENTS

1.6.1 Permits and Licenses

The Contractor, as required or as directed by the Contracting Officer, shall obtain local, state, or federal permits and licenses that directly impact the Contractor's ability to perform the work prior to commencing removal operations.

1.6.2 Statutes and Regulations

Tank closures shall be carried out in accordance with 40 CFR 280, 40 CFR 262, 40 CFR 264, and 40 CFR 265 as well as the applicable local and State of Iowa regulations and guidance document.

1.7 PROJECT/SITE CONDITIONS

The work shall consist of removal, decontamination and disposal of one , 5000 gallon underground storage tank and associated piping and ancillary

equipment. The tank is constructed of steel and is at the location shown on the drawings . The 5000 gallon tank was used for storing diesel fuel and was taken out of service in 1970. The work also includes soil and groundwater sampling, as required by Iowa Department of Natural Resources UST Regulations. Where a release has occurred, overexcavation of petroleum contaminated soil is required.
Residue remaining in the tank is considered a special waste unless proven to be hazardous by analysis and shall be properly handled and disposed of in accordance with all applicable and current federal, state, and local environmental regulations. The site is not a hazardous waste site but shall be given special consideration due to the nature of the materials and hazards present until closure activities are complete.

1.7.1 Sequencing and Scheduling

The Contractor shall coordinate scheduling with the Contracting Officer seven (7) days prior to tank removal and shall make appropriate and timely notifications to the Iowa Department of Natural Resources. The Contractor shall be responsible for contacting the Iowa Department of Natural Resources in accordance with the applicable reporting requirements. Notification of intended tank closure activity shall be received by Iowa Department of Natural Resources at least 30 days before closure of the tank is scheduled to take place.

1.7.2 Work Plan

The Contractor shall develop, implement, maintain, and supervise as part of the work, a comprehensive plan for tank removal and related operations. As a minimum the plan shall include, but not be limited to, excavation, removal, and ultimate disposal of the tank, its contents, and any contaminated materials. The Work Plan shall be based on work experience, on the requirements of this specification, and on the following references:

a. API RP 1604.

b. API Std 2015.

c. API RP 2003.

d. API Pub 2217A.

e. API Pub 2219.

f. 567-135 IAC. (Iowa UST Regulations).

g. Iowa Department of Natural Resources , Underground Storage Tank Section, Guidance Document, :"Underground Storage Tanks Closure Procedures for Tank and piping removal"..

No work at the site, with the exception of site inspections and mobilization, shall be performed until the Work Plan is approved. At a minimum, the Work Plan shall include:

a. Discussion of the removal approach, tank cleaning, and tank cutting procedures.

b. A Sampling and Analysis Plan prepared in accordance with Section: 01450 CHEMICAL DATA QUALITY CONTROL.

c. Methods to be employed for product, sludge, vapor, and pumpable liquid removal; purging and inerting; and storage methods proposed for control of surface water.

d. Treatment options.

e. Identification of waste sludge, tank and contaminated soil transporters and means of transportation.

f. Treatment, disposal, and alternate facilities, and means of treatment, disposal or remediation.

g. Borrow source.

h. Spill prevention plan.

i. Spill contingency plan.

j. Decontamination procedures, shoring plan, and safety measures in accordance with Section 01351 SAFETY, HEALTH, AND EMERGENCY RESPONSE (HTRW/UST). A site Safety and Health Plan in accordance with 29 CFR 1926.65 and as described in Section 01351 SAFETY, HEALTH, AND EMERGENCY RESPONSE (HTRW/UST)

k. Overexcavation protocol and sampling procedures as required under the Expedited Corrective Action provisions of Iowa UST regulations.

l. Temporary monitoring well or DPT installation and groundwater sampling procedures.

PART 2 PRODUCTS

2.1 BACKFILL MATERIAL

Backfill material shall be obtained from excess excavated material from channel excavation. Backfill shall be classified in accordance with ASTM D 2487 as GW, GP, GM, GC, SW, SP, SM, SC, MH, CL, or CH and shall be free from roots and other organic matter, trash, debris, snow, ice or frozen materials. The testing frequency for backfill material shall be 1 per 1000 cubic yards or a minimum of 1 test. Non-contaminated material removed from the excavation shall be used for backfill in accordance with Paragraph BACKFILLING.

PART 3 EXECUTION

3.1 GENERAL REQUIREMENTS

3.1.1 Safety Guidelines

Personnel shall abide by the safety guidelines specified in Section 01351 SAFETY, HEALTH, AND EMERGENCY RESPONSE (HTRW/UST).

3.1.2 Burning and Explosives

Use of explosives or burning debris will not be allowed.

3.1.3 Protection of Existing Structures and Utilities

The Contractor shall take all necessary precautions to avoid damage to existing structures, their appurtenances, monitoring wells, or utilities that may be affected by work activities. Any damage to utilities resulting from the Contractor's operations shall be repaired at no expense to the Government. The Contractor shall coordinate with the installation to locate underground utilities prior to beginning construction. Utilities encountered which were not previously shown or otherwise located shall not be disturbed without approval from the Contracting Officer.

3.1.4 Shoring

Shoring requirements shall be provided in accordance with Section 01351 SAFETY, HEALTH, AND EMERGENCY RESPONSE (HTRW/UST).

3.2 TANK CONTENTS VERIFICATION

Sampling and analysis shall be conducted in accordance with the approved Sampling and Analysis Plan, State of Iowa UST Regulations and Section 01450 CHEMICAL DATA QUALITY CONTROL.

3.2.1 Sampling

Tank product, pumpable liquids, tank coatings, sludge, soil, and groundwater shall be sampled by the Contractor in accordance with Section 01450 CHEMICAL DATA QUALITY CONTROL. If the data is not adequate, additional sampling and analysis to the extent required by the approved permitted treatment, storage or disposal (TSD) facility receiving the material shall be the responsibility of the Contractor. Meeting all regulatory requirements, including the preparation of hazardous materials and waste for transportation shall be the responsibility of the Contractor.

3.2.2 Analysis

Tank contents shall be tested by the Contractor for the parameters listed in Section 01450 CHEMICAL DATA QUALITY CONTROL.

3.2.3 Characterization

Prior to removing any of the tank contents, the contents shall be characterized the regulated status of the contents and the type of facility at which the tank must be disposed based on local, state, and Federal disposal regulations. Tank product, pumpable liquids, and sludge shall be characterized in accordance with 40 CFR 261 and 40 CFR 279. The waste contents determination and accompanying test results for each phase present in the tank shall be submitted to the Contracting Officer for review and approval.. The Contractor shall be responsible for any additional requirements identified by the disposal facility. The tank contents shall not be removed off-site until approval is given by the Contracting Officer. If the Contractor determines that the tank contents is a RCRA hazardous waste per EPA regulations, 40 CFR 262, the Contractor shall immediately contact the Contracting Officer who will obtain an EPA ID Number.

3.3 CLEARING, GRUBBING AND REMOVALS

Clearing and grubbing shall be in accordance with Section 02230 CLEARING AND GRUBBING.

3.4 TOPSOIL

Topsoil shall meet the requirements in Section 02210 GRADING

3.5 PREPARATIONS FOR EXCAVATION

Before excavating, the Contractor shall drain product piping back to the tank,remove any residual liquids trapped in the product lines and remove all product from the tank; and the tank shall be purged and vented in accordance with API RP 1604, and as specified herein.

3.5.1 Removal of Product, Pumpable Liquids, and Sludge

Tank product, pumpable liquids, and sludge shall be removed and disposed of by the Contractor. Temporary storage on Government facilities will be allowed only until testing is complete, manifests (if necessary) and associated shipping and disposal paperwork are complete, and transportation is arranged. The Contractor shall be responsible for obtaining all required permits. Usable product shall be the property of the Contractor. The Contractor shall provide approved containers, vehicles, equipment, labor, signs, labels, placards and manifests and associated land disposal restriction notices and notifications, necessary for accomplishment of the work, including materials necessary for cleaning up spills that could occur from tank removal operations.

3.5.2 Pumpable Liquid and Contaminated Water Disposal

3.5.2.1 Pumpable Liquids Disposal

Pumpable liquids include the rinsate from the tank cleaning operations. Pumpable liquids shall be sampled for verification of pre-treatment requirements and analyzed for the parameters indicated in Section 01450 CHEMICAL DATA QUALITY CONTROL. Sample and analysis of the pumpable liquids shall be performed prior to disposal to an approved wastewater treatment facility in accordance with the most current aplicable federal and state disposal regulations. Pumpable liquids may be discharged directly to a local sanitary sewer system if permitted by the approved wastewater treatment facility receiving the waste, and if determined not to be contaminated or hazardous. Sampling and analysis requirements as dictated by the approved wastewater treatment facility shall be met prior to discharge directly to the sanitary sewer. Rinsate or pumpable liquids not meeting testing levels shall be treated as a contaminated water and shall be disposed of in a manner specied in the next paragraph 3.5.2.2.

3.5.2.2 Contaminated Water

Contaminated water produced from excavation operations and tank pumping treated onsite and from rinsate operations, shall be analyzed for the parameters indicated in Section 01450 CHEMICAL DATA QUALITY CONTROL.. Sampling and analysis shall be performed prior to treatment and disposal of contaminated water treated.Analysis for contaminated water to be taken to an off-site treatment facility shall conform to the requirements of the treatment facility with documentation of all analyses performed furnished to the Contracting Officer in accordance with paragraph RECORDS. Contaminated water shall be contained, stored onsite, and analyzed prior to being transported to the approved treatment, storage and disposal facility and disposed of by the Contractor in accordance with applicable Federal and state disposal regulations The Contractor shall provide approved containers, vehicles, equipment, labor, signs, labels, placards and manifests and associated land disposal notices and notifications, necessary

for accomplishment of the work. Sampling and analyses of contaminated water and treated water and the Contractor and laboratory quality assurance program shall be in accordance with Section 01450 CHEMICAL DATAQUALITY CONTROL.

3.5.2.3 Treatment

Contaminated water shall be treated off-site by an approved treatment storage facility at the Contractor's option as approved by the Contracting Officer and in accordance with applicable federal, state and local disposal regulations.

3.6 PURGING AND INERTING

After the tank and piping contents have been removed, but prior to excavation beyond the top of the tank, the Contractor shall disconnect all the piping (except the piping needed to purge or inert the tank). Flammable and toxic vapors shall be purged from the tank or the tank made inert in accordance with API RP 1604, with the exceptions that filling with water shall not be used and, if dry ice is employed, the Contractor shall use a minimum of 3 pounds per 100 gallons of tank volume. The tank atmosphere shall be continuously monitored for combustible vapors if the tank is purged, or continuously monitored for oxygen if the tank is inerted.

3.7 EXCAVATION

Excavation areas, as well as work near roadways, shall be marked in accordance with Section 01351 SAFETY, HEALTH, AND EMERGENCY RESPONSE (HTRW/UST).

3.7.1 Exploratory Trenches

Exploratory trenches shall be excavated as necessary to determine the tank location, limits and the location of ancillary equipment.

3.7.2 Tank Excavation

Excavation around the perimeter of the tank shall be performed limiting the amount of potentially petroleum contaminated soil that could be mixed with previously uncontaminated soil. Petroleum contaminated soil shall be segregated in separate stockpiles. The Contractor shall maintain around the tank an excavation of sufficient size to allow workers ample room to complete the work, but also protect the workers from sliding or cave-ins. Sheeting, bracing, or shoring shall be installed in the absence of adequate side slopes if there is a need for workers to enter the excavated area. Surface water shall be diverted to prevent direct entry into the excavation. Dewatering of the excavation may require a discharge permit by the State and shall be limited to allow adequate access to the tank and piping, to assure a safe excavation, and to ensure that compaction and moisture requirements are met during backfilling. Dewatering may result in the production of petroleum contaminated water and/or free product. Free product shall be recovered from the groundwater only as part of necessary dewatering.

3.7.3 Piping Excavation

Excavation shall be performed as necessary to remove tank piping and ancillary equipment in accordance with paragraphs: Shoring, Tank Excavation, and Open Excavations.

3.7.4 Open Excavations

Open excavations and stockpile areas shall be secured while awaiting confirmation test results from the soil beneath the tank. The excavation shall be backfilled as soon as possible after tank and contaminated soil removals have been completed and confirmation samples have been taken. The Contractor shall divert surface water around excavations to prevent water from directly entering into the excavation.

3.7.5 Stockpiles

Uncontaminated excavated soil shall be stockpiled and used for backfill in the tank excavation prior to using borrow material. Excavated material which is visibly stained for which real time vapor monitoring instrument readings exceed 50 ppm for volatile and possibly semi-volatile hydrocarbons depending on the performance criteria for the field screening method and which has an obvious petroleum odor as required by the State of Iowa or implementing agency shall be considered contaminated and shall be stockpiled or placed in an appropriate containers such as roll-offs for transport to the landfarm after sampling in accordance with paragraph Stockpiled Material Sampling. Uncontaminated soil shall be stockpiled separately from the contaminated soil, a safe distance away from, but adjacent to, the excavation. Allowable stockpiles of contaminated soil shall be placed on an impermeable geomembrane a minimum of 630 mils thick, and covered with a 10 mils sheet of geomembrane as specified. The geomembrane shall be placed to prevent the stockpiled soil from coming into contact with surface water run-off. The geomembrane cover shall prevent rain or surface water from coming into contact with the contaminated soil, as well as limit the escape of the volatile constituents in the stockpile.

3.8 REMOVAL OF PIPING, ANCILLARY EQUIPMENT, AND TANK

3.8.1 Piping and Ancillary Equipment

All piping and ancillary equipment shall be disconnected from the tank. The piping shall be removed completely from the interior and exterior of the tank or as directed by the Contracting Officer. All tank ancillary equipment and piping connections shall be capped, except those connections necessary to inert the tank within the excavation zone. The piping exterior and ancillary equipment shall be cleaned to remove all soil and inspected for signs of corrosion and leakage. The Contractor shall ensure no spillage of the piping contents occurs, as specified in the Work Plan, and as required in paragraph SPILLS. If the soil under and around the tank pad is contaminated, the tank pad shall be removed and disposed of off-site at an approved waste facility. If soil under and around the tank pad is not contaminated, removal of the tank pad shall be as directed by the Contracting Officer.

3.8.2 Tank

The tank shall be removed from the excavation and the exterior cleaned to remove all soil and inspected for signs of corrosion, structural damage, or leakage. All materials coming into contact with the tank, or in the vicinity of the excavation such as shovels, slings and tools shall be of the non-sparking type. After removal from the excavation, the tank shall be placed on a level surface area on top of an 8 mils thick poly sheet, that extend beyond the outer edges of the tank by a minimum of 4 feet in all directions adjacent to the tank excavation and secured with wood

blocks to prevent movement. If present, the tank coating shall be sampled and analyzed for PCBs and asbestos in accordance with Section 01450 CHEMICAL DATA QUALITY CONTROL.

3.8.3 Contaminated Soil, Tank and Piping Excavation Examination

After the tank has been removed from the ground, the adjacent and underlying soil shall be examined for any evidence of leakage. The soil shall be visually inspected for staining after removal of all obviously contaminated soil, then screened for the presence of volatile and/or semi-volatile contamination using a real time vapor monitoring instrument. Petroleum contaminated soil shall be stockpiled, as specified in Paragraph 3.7.5 Stockpiles until transport to the landfarm. Overexcavation of contaminated soil shall be performed under the Expedited Corrective Action Provision of Iowa UST regulation 567-135.12. Overexcavation shall continue until remaining soil headspace levels are at 10 ppm as determined by the State of Iowa Groundwater Professional. Total excavated contaminated soil shall not exceed 100 cubic yards per site unless otherwise directed by the Contracting Officer. The Contractor shall report any evidence indicating that the amount of contaminated soil may exceed the individual site limit specified, to the Contracting Officer the same day it is discovered. If minimal additional excavation is required, the Contracting Officer may allow the Contractor to proceed. After the known contaminated soil is removed, the excavation shall be sampled and analyzed in accordance with Section 01450 CHEMICAL DATA QUALITY CONTROL and with the applicable provisions of Iowa UST regulations. The Iowa Certified Groundwater Professional shall keep detailed record of excavation and overexcavation dimensions, quantities, analytical sampling locations, field screen sampling locations and results and field observations.

3.9 TANK CLEANING

3.9.1 Exterior

Soil shall be removed from the exterior of the tank, piping, and associated equipment to eliminate soil deposition on roadways during transportation to a temporary storage area, ensure markings will adhere to the surfaces, and simplify tank cutting. Soil shall be removed using non-sparking tools. Clean soil shall be recovered and used as backfill in the former tank excavation ordisposed of onsite. Soil believed to be contaminated shall be removed and stockpiled with other contaminated soil removed from the excavation.

3.9.2 Temporary Storage

If the tank is stored after the tank exterior is cleaned and ancillary equipment is removed, and prior to being cut into sections, the tank shall be labeled as directed in API RP 1604, placed on blocks, and temporarily stored on the ground in an open level surface area on top of 8 mils thick poly sheet adjacent to the excavation of the existing tank site. Prior to cleaning the tank interior the tank atmosphere shall be monitored for combustible vapors and purged or inerted if combustible vapors are detected.

3.9.3 Interior

The tank interior shall be cleaned using a high pressure (greater than 500 psi), low volume (less than 2 gpm) water sprayor steam cleaned until all loose scale and sludge is removed, and contamination, in the form of a sheen, is no longer visible in the effluent stream. The interior surfaces

of piping shall also be cleaned, to the extent possible, using the same method used for cleaning the tank. Pumpable liquids generated from interior cleaning operations (of both piping and tank) shall not exceed the following quantities for each UST cleaned:

UST VOLUME (GALLONS)	PERCENT OF UST VOLUME
1,000 or less	5
10,000 or less	5 or 100 gal., whichever is less
20,000 or less	1 or 150 gal., whichever is less
greater than 20,000	1 or 250 gal., whichever is less

All pumpable liquid resulting from cleaning operations shall be handled in accordance with paragraph Pumpable Liquid And Contaminated Water Disposal. Cleaning shall be accomplished eliminating, to the greatest extent possible, the need for personnel to enter the tank. Cleaning shall be done using specially designed tank cleaning equipment which allows the tank to be cleaned prior to cutting into sections without requiring personnel to enter the tank or, if less specialized equipment is used, the tank shall be partially dissected to overcome confined space entry hazards. This work shall be accomplished in accordance with Section 01351 SAFETY, HEALTH, AND EMERGENCY RESPONSE (HTRW/UST).

3.10 SOIL EXAMINATION, TESTING, AND ANALYSIS

3.10.1 Tank Excavation Sampling Procedures

After soil known to be contaminated has been removed or after soil excavation is complete, the excavation shall be sampled with procedures, number, location, and methodology in accordance with state of Iowa regulations 567-135.15(3) if overexcavation less than 1 feet, beyond the tank pit or the Expedited Corrective Action provision of Iowa UST shall be implemented and Section 01450 CHEMICAL DATA QUALITY CONTROL shall be complied with.. Samples shall be obtained via boreholes using soil sampling kit containing a rigid acetate liner (at least 0.9 inches in diameter and 18 inches long) complete with plastic end-caps, or sample collection via glass containers provided by the approved lab.

3.10.2 Stockpiled Material Sampling

One sample of the Stockpiled contaminated soil shall be sampled and analyzed in accordance with the approved Sampling and Analysis Plan, and Section 01450 CHEMICAL DATA QUALITY CONTROL.

3.10.3 Analysis

Soil samples from the excavation and stockpiled material shall be tested in accordance with the State of Iowa Regulations, approved Sampling and Analysis Plan, and Section 01450 CHEMICAL DATA QUALITY CONTROL. Copies of all test results shall be provided to the Contracting Officer within 5 days of receipt.

3.10.4 Groundwater Sampling, Testing, and Analysis

A temporary monitoring well shall be installed by an Iowa Certified Well Contractor. Alternatively, a Direct Push Technology (DPT) point may be driven. Well placement, soil assessment and performance of sampling operations shall be conducted by an Iowa Certified Groundwater professional. All tasks associated with selection of locations, well

installation, soil assessment and groundwater sampling shall be in accordance with Iowa UST regulations 567-135 IAC. Specific sampling requirements are detailed in Section 01450 CHEMICAL DATA QUALITY CONTROL.

3.11 BACKFILLING

The tank area and any other excavations shall be backfilled as soon as possible after tank and contaminated soil removals have been completed and confirmation samples have been taken. Contaminated soil removal shall be complete after the bottom and the sides of the tank excavation exhibit field headspace screening values of less than or equal to 10 ppm as determined by the Iowa Certified Groundwater Professional. Backfill consisting of clean fill shall be placed in layers with a maximum loose thickness of 8 inches, and compacted to 90 percent maximum density for cohesive soils and 95 percent maximum density for cohesionless soils. Density tests shall be performed by an approved commercial testing laboratory or by facilities furnished by the Contractor. Test results shall be attached to contractor's Quality Control Report. A minimum of 1 density test shall be performed on each lift. Laboratory tests for moisture density relations shall be determined in accordance with ASTM D 1557, Method B, C, or D, or ASTM D 3017. A mechanical tamper may be used provided that the results are correlated with those obtained by the hand tamper. Field in-place density shall be determined in accordance with ASTM D 1556, ASTM D 2922, or ASTM D 2167.

3.12 DISPOSAL REQUIREMENTS

3.12.1 Treatment, Disposal, and Recycling

Disposal of special wastes shall be in accordance with all local, State, and Federal solid and hazardous waste laws and regulations; the RCRA; and conditions specified herein. This work shall include all necessary personnel, labor, transportation, packaging, detailed analyses (if required for disposal, manifesting or completing waste profile sheets), equipment, and reports. The tank removed shall be disposed of in a State approved off-sitefacility. The tank disposed of in this manner shall be manifested as required by the State of Iowa to document delivery and acceptance at the disposal facility. A copy of all disposal paperwork and associated analytical results (if applicable) for all tank-derived materials and water to be disposed off-site shall be submitted to the Contracting Officer a minimum of 5 working days prior to removal from the site. No waste materials shall be removed from the site without approval of the Contracting Officer.

3.12.2 Tank and Ancillary Equipment Disposal

After the tank, piping, and ancillary equipment have been removed from the excavation, placed on top of the 8 mil ply sheet and the tank cleaned, the tank shall be cut into sections with no dimension greater than 5 feet. Tank and piping sections shall be disposed of in a State and Contracting Officer approved off-site disposal or scrap metalfacility . The tank shall be cut into sections prior to being taken from the tank removal site. The Contractor shall not sell the tank intact. Ancillary equipment shall be disposed of at an approved off-site disposal or recycling facility Piping shall be disconnected from the tank and removed unless otherwise indicated.

3.12.3 Transportation of Wastes

Transportation shall be provided in accordance with Department of

Transportation (DOT) Hazardous Material Regulations and State and local requirements, including obtaining all necessary permits, licenses, and approvals. Evidence that a State licensed waste transporter is being used shall be included in the waste disposal package submitted to and approved by the Contracting Officer prior to removal from the site..

3.12.4 Salvage Rights

The Contractor shall retain the rights to salvage value of recycled or reclaimed product and metal not turned in to the City of Sioux City or otherwise identified, so long as the requirements of 40 CFR 266 and 40 CFR 279, or the applicable State requirements are met. At the end of the contract, the Contractor shall provide documentation on the disposition of salvaged materials.

3.12.5 Records

Records shall be maintained of all waste determinations, including appropriate results of analyses performed, substances and sample location, the time of collection, and other pertinent data as required by 40 CFR 280, Section 74 and 40 CFR 262 Subpart D, and Section 01450 CHEMICAL DATA QUALITY CONTROL. Transportation, treatment, disposal methods and dates, the quantities of waste, the names and addresses of each transporter and the disposal or reclamation facility, shall also be recorded and available for inspection, as well as copies of the following documents:

a. Manifests.

b. Waste analyses or waste profile sheets.

c. Certifications of final treatment/disposal signed by the responsible disposal facility official.

d. Land disposal notification records required under 40 CFR 268 for hazardous wastes.

Records shall be provided to and shall become the property of the Contracting Officer following contract close out.

3.12.6 Hazardous/Special Waste Manifests

Manifesting shall conform to the requirements of 40 CFR 262, 40 CFR 761 and applicable Department of Transportation and State regulations.

3.12.7 Documentation of Treatment or Disposal

The wastes, other than recyclable or reclaimable product or metal, shall be taken to a treatment, storage, or disposal facility which has EPA or appropriate state permits and special waste identification numbers and complies with the provisions of the disposal regulations. Documentation of acceptance of special waste by a facility legally permitted to treat or dispose of those materials and the original return copy of the nonhazardous waste shipping papers or hazardous waste manifest, signed by the owner or operator of a facility legally permitted to treat or dispose of those materials shall be furnished to the Contracting Officer not later than 5 working days following the delivery of those materials to the facility; and a copy shall be included in the Tank Closure Report. A statement of agreement from the proposed treatment, storage or disposal facility and certified transporters to accept the wastes shall be furnished in the Work

Plan to the Contracting Officer for approval not less than 5 working days before transporting any wastes.

3.13 SPILLS

Immediate containment actions shall be taken as necessary to minimize effect of any spill or leak. Cleanup shall be in accordance with applicable Federal, State, local laws and regulations, and district policy at no additional cost to the Government.

3.14 TANK CLOSURE REPORT

Tank Closure Reports shall include the following information as a minimum:

a. A cover letter signed by a Certified Groundwater Professional registered in the State of Iowa certifying that all services involved have been performed in accordance with applicable State of Iowa regulations and the terms and conditions of this specification.

b. A narrative report describing what was encountered at each site. The report format and contents shall follow those specified in the Iowa Department of Natural Resources, Underground Storage Tank Section Guidance Document-'Underground Storage Tank Closure Procedures for Tank and Piping Removal'. The report shall include the following:

c. Copies of all waste analyses or waste profile sheets.

d. Copies of all certifications of final disposal signed by the responsible disposal installation official.

e. Information on who sampled, analyzed, transported, and accepted all wastes encountered, including copies of manifests, waste profile sheets, land disposal restriction, notification and certification forms, certificates of disposal, and other pertinent documentation.

f. Copies of all analyses performed for confirmation that underlying soil is not contaminated, with copies of chain-of-custody for each sample. Analyses shall give the identification number of the sample used. Sample identification numbers shall correspond to those provided on the one-line drawings.

g. Progress Photographs. The Contractor shall take a minimum of 4 views of the site showing such things as the location of each tank, entrance/exit road, and any other notable site conditions before work begins. After work has been started at the site, the Contractor shall photographically record activities at each work location daily. Photographs shall be 3 x 5 inches and shall include:

(1) Soil removal, handling, and sampling.

(2) Unanticipated events such as discovery of additional contaminated areas.

(3) Soil stockpile area.

(4) Tank.

(5) Site or task-specific employee respiratory and personal protection.

(6) Fill placement and grading.

(7) Post-construction photographs. After completion of work at each site, the Contractor shall take a minimum of four (4) views of the site. Prints shall illustrate the condition and location of work and the state of progress. The photographs shall be mounted and enclosed back-to-back in a double face plastic sleeve punched to fit standard three ring binders. Each color print shall show an information box, 1-1/2 x 3-1/2 inches. The information box for the 3 x 5 inch photographs shall be scaled down accordingly, or taped to the bottom of the photo. The box shall be typewritten and arranged as follows:

Project No. Contract No.

Location
Contractor/Photographer

Photograph No. Date/Time:

Description

Direction of View

-- End of Section --

SECTION TABLE OF CONTENTS

DIVISION 02 - SITE WORK

SECTION 02210

GRADING

12/88

PART 1 GENERAL

1.1 REFERENCES
1.2 DEFINITIONS
1.2.1 Degree of Compaction
1.2.2 Compacted Random Backfill
1.3 SUBMITTALS

PART 2 PRODUCTS

2.1 MATERIALS
2.1.1 Satisfactory Materials
2.1.2 Unsatisfactory Materials
2.1.3 Cohesionless and Cohesive Materials
2.1.4 Acceptable Topsoil

PART 3 EXECUTION

3.1 CLEARING AND GRUBBING
3.2 STRIPPING TOPSOIL
3.3 DRAINAGE AND EXCAVATION DEWATERING
3.4 EXCAVATION AND DISPOSAL OF UNSATISFACTORY AND EXCESS EXCAVATED MATERIAL
3.4.1 HAUL ROUTES
3.5 EXCAVATION OF OPEN CHANNEL
3.6 UTILIZATION OF EXCAVATED MATERIALS
3.7 BACKFILL ADJACENT TO CULVERTS, STORM DRAINS, AND SUBDRAINS
3.8 PREPARATION OF GROUND SURFACE FOR COMPACTED RANDOM BACKFILL AREAS
3.9 COMPACTED RANDOM BACKFILL
3.10 COMPACTION
3.10.1 Compacted Random Backfill, Over-all, or Overlot Areas
3.10.2 Areas to Receive Pavements
3.10.2.1 Subgrade Preparation for Areas to Receive Pavements
3.10.2.2 Spot Subgrade Reinforcement for Areas to Receive Pavements
3.11 PLACING TOPSOIL
3.12 FIELD TESTING CONTROL
3.12.1 Sampling and Testing
3.12.2 Moisture-Density Determinations
3.12.3 Density Control
3.13 FINISHED EXCAVATION AND BACKFILLS
3.14 PROTECTION
3.14.1 Protection of Existing Service Lines and Utilities Structures
3.15 ADJUSTMENT OF EXISTING STRUCTURES

-- End of Section Table of Contents --

SECTION 02210

GRADING
12/88

PART 1 GENERAL

The work covered by this section includes all excavation, filling, grading, and associated operations to be completed as part of the work that is not considered to be structural fill/backfill or compacted embankment. Excavation, filling, and backfilling for retaining wall and stilling basin structures shall be in accordance with Section 02315. The grading necessary to construct the gatewell structure, sluice gate, and install reinforced precast concrete pipe and timber piling at the storm drain structures in the channel shall be in accordance with Section 02310. All areas shall be graded in accordance with this specification, Section 02315, or Section 02310. Excavation, filling, and backfilling for utility structures shall be in accordance with Section 02630. Placement of compacted embankment shall be in accordance with Section 02212.

1.1 REFERENCES

The publications listed below form a part of this specification to the extent referenced. The publications are referred to in the text by basic designation only.

AMERICAN SOCIETY FOR TESTING AND MATERIALS (ASTM)

ASTM D 698	(1991) Laboratory Compaction Characteristics of Soil Using Standard Effort (12,400 ft-lbf/cu. ft. (600 kN-m/cu.m.))
ASTM D 1556	(1990; R 1996) Density and Unit Weight of Soil in Place by the Sand-Cone Method
ASTM D 2167	(1994) Density and Unit Weight of Soil in Place by the Rubber Balloon Method
ASTM D 2487	(1993) Classification of Soils for Engineering Purposes (Unified Soil Classification System)
ASTM D 2922	(1996) Density of Soil and Soil-Aggregate in Place by Nuclear Methods (Shallow Depth)
ASTM D 3017	(1996) Water Content of Soil and Rock in Place by Nuclear Methods (Shallow Depth)

1.2 DEFINITIONS

1.2.1 Degree of Compaction

Degree of compaction shall be expressed as a percentage of the maximum density obtained by the test procedure presented in ASTM D 698.

1.2.2 Compacted Random Backfill

Material for compacted random backfill shall consist of any or all types of satisfactory compacted cohesive or cohesionless material as specified below. The random backfill shall be suitable from the standpoint of compacted stability for its use as backfill. This material shall be selectively excavated from within the excavation and grading limits and stockpiled, if necessary, in areas approved by the Contracing Officer for later use.

1.3 SUBMITTALS

Government approval is required for submittals with a "G" designation; submittals not having a "G" designation are for information only. When used, a designation following the "G" designation identifies the office that will review the submittal for the Government. The following shall be submitted in accordance with Section 01330 SUBMITTAL PROCEDURES:

SD-01 Preconstruction Submittal

Disposal Facility; G-RE.

Location of disposal facility and appropriate documentation.

SD-06 Test Reports

Field Testing Control:
In-Place Densities; G-RE

Copies of all laboratory and field test reports shall be furnished within 24 hours of the completion of the test.

SD-07 Certificates

Optimum Moisture and Laboratory Maximum Density; G-RE

Certified test reports and analysis certifying that the satisfactory materials proposed for use at the project site conform to the specified requirements, and that tests are conducted in accordance with paragraph Optimum Moisture and Laboratory Maximum Density.

Field Testing Control;

Qualifications of the commercial testing laboratory who will be performing all testing in accordance with paragraph FIELD TESTING CONTROL.

PART 2 PRODUCTS

2.1 MATERIALS

2.1.1 Satisfactory Materials

Satisfactory materials are materials that classify according to ASTM D 2487 as GW, GP, GC, GM, SW, SP, SC, SM, CL, CH, and ML. Lime and flyash shall also be considered as satisfactory material when used as stabilizing agents.

2.1.2 Unsatisfactory Materials

Unsatisfactory materials include all materials that are not defined above as satisfactory materials. In addition, unsatisfactory materials are materials that classify according to ASTM D 2487 as MH, OH, Pt, and OL. Unsatisfactory materials also include all material that contains debris, refuse, roots, organic matter, frozen material, fine grained sedimentary rocks (i.e., shale, claystone, siltstone, mudstone, and marl) even though they may be intensely weathered, contamination from hazardous, toxic, biological or radiological substances, stone having a maximum dimension larger than 3 inches in any dimension, or other materials that are determined by the Contracting Officer as unsatisfactory for providing a stable subgrade. Otherwise satisfactory material which has excess moisture content shall not be classified as unsatisfactory material unless it cannot be dried by manipulation, aeration, or blending with other materials as determined by the Contracting Officer.

2.1.3 Cohesionless and Cohesive Materials

Cohesionless materials include materials classified according to ASTM D 2487 as GW, GP, SW, and SP. Cohesive materials include materials classified as GC, SC, ML, CL, MH, and CH. Materials classified as GM and SM will be identified as cohesionless only when the fines are nonplastic.

2.1.4 Acceptable Topsoil

Acceptable topsoil shall be placed as specified in Sections 02215 TOPSOIL and 02921 SEEDING.

PART 3 EXECUTION

3.1 CLEARING AND GRUBBING

The areas within the limits shown on the drawings for tree removal, and all other areas as necessary within and 5 feet outside of the grading limits shown on the drawings shall be cleared and grubbed as specified in Section 02230 CLEARING AND GRUBBING.

3.2 STRIPPING TOPSOIL

Topsoil shall be stripped and deposited in storage piles for later use as specified in Section 02215 TOPSOIL and Section 02921 SEEDING.

3.3 DRAINAGE AND EXCAVATION DEWATERING

The Contractor shall construct and maintain all necessary diversions channels, flumes and/or temporary diversion and protective works necessary to protect excavation areas, shall furnish all material required therefore, and shall furnish, install, maintain and operate all sumps, pumping, and other equipment for dewatering and for maintaining the required excavation areas. All excavation dewatering operations shall not impose adverse impacts (e.g., induce settlements or displacements) on adjacent buildings and surrounding areas.

3.4 EXCAVATION AND DISPOSAL OF UNSATISFACTORY AND EXCESS EXCAVATED MATERIAL

Excavation of every description, regardless of material encountered, within the grading limits of the project shall be performed to the lines and grades indicated including removal of existing bituminous surface course,

concrete pavement and integral curb, pavement subcourses to the full depth, concrete walk, culverts, storm drains, subdrains, and storm drain and subdrain structures. Satisfactory excavated material shall be transported to and placed in fill areas within the limits of the work. Unsatisfactory material encountered within the limits of the work shall be excavated below the grade shown and replaced with satisfactory material as directed. Such material excavated and the selected material ordered as replacement will be paid for by an equitable adjustment of the contract price under the clause of the CONTRACT CLAUSES of the contract entitled "Changes." Unsatisfactory material and surplus excavated material not required for fill shall be disposed of by the Contractor at his own expense and responsibility outside the limits of Government-controlled land. Disposal of materials outside Government-controlled lands shall be in accordance with federal, state, and local regulations. The location of any disposal facility located outside of the limit of Government-controlled lands shall be submitted to the Contracting Officer prior to removal from the project site. The Contractor shall submit documentation from the disposal facility to verify that it is licensed to accept the material. No material shall be removed from the project site without prior approval from the Contracting Officer. The Contractor shall notify the Contracting Officer if any material to be disposed of is found to contain hazardous, toxic, biological or radiological substances. During construction, excavation and filling shall be performed in a manner and sequence that will utilize all satisfactory material from required excavation prior to obtaining material from borrow and will provide drainage at all times.

3.4.1 HAUL ROUTES

All loads shall be covered. The Contractor shall clean haul routes of any spilled materials by sweeping or flushing.

3.5 EXCAVATION OF OPEN CHANNEL

The open channel shall be cut accurately to the cross sections and grades indicated. All roots, stumps, rock and foreign matter in the sides and bottom of the existing channel area shall be cut to conform to the slope, grade, and shape of the section shown. Care shall be taken not to excavate the open channel bottom and slopes below the grades indicated. Where e xcessive excavations are made, the excavation shall be backfilled to grade with satisfactory, thoroughly compacted material at the Contractor's expense andas directed by the Contracting Officer. All excavated areas under this section shall be maintained until final acceptance of the work. Unsatisfactory and excess excavated material shall be disposed of as specified above.

3.6 UTILIZATION OF EXCAVATED MATERIALS

Satisfactory material removed from required excavation under this section shall be utilized in the formation of compacted embankments, fills and backfills, subgrades, shoulders, slopes, backfill for culverts and other structures, and for such other purposes as directed. No excavated material shall be wasted without the authorization of the Contracting Officer. Material authorized to be wasted shall be disposed of as directed and in such manner as not to obstruct the flow characteristics of any stream or to impair the efficiency or appearance of any structure. No excavated material shall be deposited at any time in a manner that may endanger a partly finished structure by direct pressure, by overloading banks contiguous to the operations, or that may in any other way be detrimental

to the completed work.

3.7 BACKFILL ADJACENT TO CULVERTS, STORM DRAINS, AND SUBDRAINS

Backfill adjacent to culverts, storm drains, and subdrain structures shall be placed and compacted uniformly in such manner as to prevent wedging action or eccentric loading upon or against the structures. Slopes bounding or within areas to be backfilled shall be stepped or serrated to prevent sliding of the fill. During backfilling operations and in the formation of embankments, equipment that will overload the structure in passing over and compacting these fills shall not be used. Backfill for culverts, storm drains and subdrains, including the bedding, shall conform to the additional requirements as specified in Section 02630 STORM-DRAINAGE SYSTEM and Section 02310 DRAINAGE STRUCTURES IN CHANNEL.

3.8 PREPARATION OF GROUND SURFACE FOR COMPACTED RANDOM BACKFILL AREAS

All vegetation, such as roots, brush, heavy sods, heavy growth of grass, and all decayed vegetable matter, rubbish, and other unsatisfactory material within the area upon which fill is to be placed, shall be stripped or otherwise removed before the fill is started. In no case will unsatisfactory material remain in or under the fill area. Stumps, logs and roots more than 1-1/2 inch in diameter shall be excavated and removed to a depth not less than 18 inches below the original ground surface. After stripping and removal of unsatisfactory foundation material, cavities or other depressions shall be broken down, where so directed, to flatten out slopes. Immediately prior to the placement of fill material the entire earth surface on or against which fill is to be placed, shall be thoroughly broken to a depth of (6) inches and the area to be occupied by fill materials shall be compacted in accordance with the provisions specified below in paragraph 3.10 COMPACTION. Sloped ground surfaces steeper than one vertical to four horizontal on which fill is to be placed shall be plowed, stepped, or broken up, as directed, in such manner that the fill material will bond with the existing surface. Prepared surfaces on which compacted fill is to be placed shall be wetted or dried as may be required to obtain the moisture content and density specified in paragraph 3.10.1. Foundations receiving fill and all partially completed fill shall be kept thoroughly drained in accordance with paragraph 3.14 PROTECTION.

3.9 COMPACTED RANDOM BACKFILL

Random compacted backfill shall be constructed at the locations and to the lines and grades indicated on the drawings. The completed backfill shall correspond to the shape of the typical sections shown on the drawings and shall meet the requirements of the particular case. Satisfactory material removed from the excavation shall be used in forming the necessary backfill. Where otherwise satisfactory material is too wet, it shall be aerated or dried to provide the moisture content specified for compaction. The material shall be placed in successive horizontal layers of 8 inches in loose depth for cohesive materials and 12 inches in loose depth for noncohesive materials for the full width of the cross section prior to compaction. Each layer shall be spread uniformly on the previosly compacted surface: plowed, disked or otherwise broken up; moistened or aerated as necessary; thoroughly mixed and compacted to produce fills meeting the specified moisture and density requirements. The gradation and distribution of materials throughout the compacted random backfill section shall be such that the fill will be free from lenses, pockets, streaks, and layers of materials differing substantially in texture or gradation from surrounding material of the same class. No fill shall be placed upon a frozen surface,

nor shall snow, ice or frozen earth be incorperated in the backfill.

3.10 COMPACTION

Compaction shall be accomplished by the means specified below. Deficiencies in construction shall be corrected by the Contractor at no additonal cost to the Government.

3.10.1 Compacted Random Backfill, Over-all, or Overlot Areas

Each layer of fills constructed under this section except for topsoil shall be compacted to at least 90 percent of the maximum density as determined in paragraph 1.2.1 Degree of Compaction. Cohesive soils shall be at a moisture content between 2 percent below and 3 percent above optimum moisture when compacted. Cohesionless soils shall be compacted at a moisture content as required to facilitate compaction without bulking.

3.10.2 Areas to Receive Pavements

All fills for paved areas shall be compacted as specified for OVER-ALL OR OVERLOT AREAS, with the following exception. The upper layer forming the subgrade for pavements in both cut and fill areas, shall be compacted to at least 95 percent of maximum density as determined in paragraph 1.2.1 Degree of Compaction.

3.10.2.1 Subgrade Preparation for Areas to Receive Pavements

The subgrade shall be shaped to line, grade and cross section with approved compaction equipment so as to provide a minimum compacted subgrade thickness of 6 inches. This operation shall include any reshaping, aeration, wetting, or drying required. The subgrade in cut sections shall be scarified and excavated for the full depth of compacted subgrade indicated on the drawings, and the excavated material shall be windrowed and bladed successively until thoroughly blended, then relaid and compacted. The subgrade in fill sections shall be windrowed and bladed successively until thoroughly blended, then compacted. The moisture content of cohesive soils shall be adjusted within the range 1 percent below to 3 percent above optimum moisture when compacted. Cohesionless soils shall be compacted as required to facilitate compaction without bulking. All unsatisfactory material shall be removed and replaced with satisfactory material from excavation or, if so directed, with spot subgrade reinforcement material, as approved by the Contracting Officer. Spot subgrade reinforcement, if required, will be paid for by an equitable adjustment of the contract price under the clause Entitled "Changes" of the CONTRACT CLAUSES. All boulders or ledge stone encountered in the excavation shall be removed or broken off to a depth of not less than 6 inches below the subgrade. The resulting area and all other low sections, holes, or depressions shall be brought to the required grade with satisfactory material and the entire subgrade shaped to line, grade and cross section and thoroughly compacted as herein provided. Subgrade compaction shall be extended to include the shoulders.

3.10.2.2 Spot Subgrade Reinforcement for Areas to Receive Pavements

The use of spot subgrade reinforcement material shall be at the direction of and subject to the approval of the Contracting Officer. Unsatisfactory subgrade materials shall be removed, the bottom of the resulting excavation shaped uniformly and compacted firmly to the density specified for subgrade, and the required provisions for adequate drainage shall be made.

The subgrade reinforcement material shall then be placed in the prepared excavation, in layers of not more than 8 inches, which shall be spread and rammed until level with the surrounding subgrade surface. The voids shall then be filled with necessary finer selected material and the area rolled, or tamped if inaccessible to the roller. The filling and rolling or tamping shall be continued until the entire mass is thoroughly compacted to not less than the density of the surrounding or adjacent areas. The surface shall be finished to conform accurately to the grade and cross section shown on the drawings.

3.11 PLACING TOPSOIL

All areas within the grading limits shown on the drawings and not built over, paved or otherwise surfaced shall be topsoiled as specified in Section 02215 TOPSOIL and Section 02921 SEEDING. The resulting topsoiled surface shall meet the finish surface requirements specified in paragraph 3.13 FINISHED EXCAVATION AND BACKFILLS.

3.12 FIELD TESTING CONTROL

3.12.1 Sampling and Testing

All quality control sampling and testing shall be performed by the Contractor in accordance with Section 01451 CONTRACTOR QUALITY CONTROL and as specified herein. All testing laboratories used by the Contractor shall be validated in accordance with paragraph 3.7.2.1 Validation Check of Section 01451. The Government may perform Quality Assurance (QA) Testing at any time at the discretion of the Contracting Officer.

3.12.2 Moisture-Density Determinations

Tests for determination of maximum density and optimum moisture shall be performed by the Contractor in accordance with ASTM D 698, except that a mechanical tamper may be used provided the results are correlated with those obtained with the referenced hand tamper. Samples shall be representative of the materials to be placed. An optimum moisture-density curve shall be obtained for each principal type of material or combination of materials encountered or utilized. Results of these tests shall be the basis of control for compaction. The above testing shall include Atterberg limits, grain size determinations and specific gravity. A copy of these tests shall be furnished to the Contracting Officer with the construction quality control daily report.

3.12.3 Density Control

The Contractor shall adequately control his compaction operations by tests made in accordance with any of the following methods: ASTM D 1556, ASTM D 2167, or ASTM D 2922 and ASTM D 3017 to insure placement of materials within the limits of densities specified. When ASTM D 2922 is used, the calibration curves shall be checked, and adjusted if necessary, using the sand cone method as described in paragraph "Calibration" of ASTM D 2922. ASTM D 2922 results in a wet unit weight of soil and when using this method, ASTM D 3017 shall be used to determine the moisture content of the soil. The calibration curves furnished with the moisture gauges shall be checked along with the density calibration checks as described in ASTM D 3017. The calibration checks of both the density and moisture gauges shall be made at the beginning of a job, on each different type of material encountered, at intervals as directed by the Contracting Officer. If ASTM D 2922 is used for field density control, there should be at least one test

performed according to ASTM D 1556 per every 10 tests performed according to ASTM D 2922-\ for correlation of test results. One test shall be made for each 3,000 sq yds or less for each layer of specified depth, except areas to receive pavements, for which one test shall be made for each 1,000 sq yds or less for each layer. A minimum of one test taken per day during compaction operations. Additional tests shall be made as necessary to ensure adequate compaction. All test results shall be made available to the Contracting Officer. Acceptance tests may be made by the Government for verification of compliance; however, the Contractor shall not depend on such tests for his control of operations. Deficiencies in construction shall be corrected by the Contractor at no additional cost to the Government.

3.13 FINISHED EXCAVATION AND BACKFILLS

All areas covered by the project, including excavated and filled sections and adjacent transition areas, shall be uniformly smooth graded. The finished surface shall be reasonably smooth, compacted, and free from irregular surface changes. The degree of finish shall be that ordinarily obtainable from either blade-grader or scraper operations, except as otherwise specified. The finished surface shall be not more than 0.15 foot above or below the established grade or approved cross section and shall be free of depressed areas where water would pond. All ditches shall be finished so as to drain readily. The surface of embankments or excavated areas for road construction or other areas to be paved on which a base course or pavement is to be placed shall not vary more than 0.05 foot from the established grade and approved cross section.

3.14 PROTECTION

During construction, fill areas and excavations shall be kept shaped and drained. Ditches and drains shall be maintained in such manner as to drain effectively at all times. Where ruts occur in the subgrade, the subgrade shall be brought to grade, reshaped if required, and recompacted prior to the placing of surfacing. The storage or stockpiling of materials on the subgrade will not be permitted. No surfacing shall be laid until the subgrade has been checked and approved, and in no case shall any surfacing be placed on a muddy subgrade or on one containing frost. Newly graded areas shall be protected from traffic and from erosion, and any settlement or washing away that may occur from any cause, prior to acceptance, shall be repaired and grades reestablished to the required elevations and slopes. All work shall be conducted in accordance with the environmental protection requirements of the contract.

3.14.1 Protection of Existing Service Lines and Utilities Structures

Existing utility lines that are shown on the drawings, or the locations of which are made known to the Contractor prior to excavation that are to be retained, shall be protected from damage during excavation and backfilling, and if damaged, shall be repaired by the Contractor at his expense. In the event that the Contractor damages any existing utility lines that are not shown, or the locations of which are not made known to the Contractor, report thereof shall be made immediately to the Contracting Officer. If determined that repairs are to be made by the Contractor, such repairs will be made in accordance with the clause Entitled "Changes" of the CONTRACT CLAUSES.

3.15 ADJUSTMENT OF EXISTING STRUCTURES

All manholes, valve boxes, or inlets of any nature within the project that do not conform to the new finish grade in either surfaced or unsurfaced areas shall be adjusted to the new finish grade. Where inlets, manholes, or valve boxes fall within a surfaced or unpaved roadway or parking, the existing frames and cover shall be removed and replaced with a heavy-duty frame and cover. The structure shall be adjusted as needed to fit the new conditions. All structures shall be of a type satisfactory for the intended use and shall conform to the requirements of the applicable section of these specifications.

-- End of Section --

SECTION TABLE OF CONTENTS

DIVISION 02 - SITE WORK

SECTION 02212

COMPACTED EMBANKMENT

08/94

PART 1 GENERAL

1.1 CHANGES IN LEVEE ALIGNMENT
1.2 REFERENCES
1.3 DEFINITIONS
1.3.1 Degree of Compaction

PART 2 SUBMITTALS

PART 3 EMBANKMENT FOUNDATION PREPARATION

3.1 Drainage
3.2 Existing Embankments

PART 4 EMBANKMENT MATERIALS

4.1 Impervious Fill Material
4.2 Unsuitable Material
4.3 Suitable Material

PART 5 EMBANKMENT CONSTRUCTION

5.1 Density and Moisture Control
5.1.1 Basis for Compaction Control Tests
5.1.2 Sampling and Testing

PART 6 CROSS SECTIONS AND ZONING OF MATERIALS

6.1 Zoning of Materials
6.2 Tolerances

PART 7 CONDUCT OF WORK AND ACCESS

7.1 Access During Construction
7.2 Conduct of the Work

PART 8 STRUCTURAL BACKFILL

-- End of Section Table of Contents --

SECTION 02212

COMPACTED EMBANKMENT
08/94

PART 1 GENERAL

The work covered by this section consists of furnishing all plant, labor, materials and equipment and performing all operations in connection with the construction of levees (compacted embankments), including foundation preparation and other incidental earthwork as may be necessary to complete the levees as specified herein, shown on the drawings or otherwise directed by the Contracting Officer. Work shall also include operations in connection with backfilling holes, open basements, and other hazardous openings as indicated in Section 02220 DEMOLITION.

1.1 CHANGES IN LEVEE ALIGNMENT

The right is reserved to make such changes in the levee alignment as may be necessary before completion of the work, but if it becomes necessary through no fault of the Contractor, to abandon any alignment or location on which work has been done, payment for materials placed will be made as specified in paragraph 11 of SECTION 01000 SPECIAL CLAUSES.

1.2 REFERENCES

The publications listed below form a part of this specification to the extent referenced. The publications are referred to in the text by basic designation only.

AMERICAN SOCIETY FOR TESTING AND MATERIALS (ASTM)

ASTM D 698	(1991;R 1998) Laboratory Compaction Characteristics of Soil Using Standard Effort (12,400 ft-lbf/cu ft (600 kN-m/cu m))
ASTM D 1556	(1990;R 1996) Density and Unit Weight of Soil in Place by the Sand-Cone Method
ASTM D 2167	(1994) Density and Unit Weight of Soil in Place by the Rubber Balloon Method
ASTM D 2487	(1998) Classification of Soils for Engineering Purposes (Unified Soil Classification System)

1.3 DEFINITIONS

1.3.1 Degree of Compaction

Degree of compaction shall be expressed as a percentage of the maximum density obtained by the test procedure presented in ASTM D 698, abbreviated as percent laboratory maximum density.

PART 2 SUBMITTALS

Government approval is required for submittals with a "G" designation; submittals not having a "G" designation are for information only. When used, a designation following the "G" designation identifies the office that will review the submittal for the Government. The following shall be submitted in accordance with Section 01330 SUBMITTAL PROCEDURES:

SD-01 Preconstruction Submittals

Contractor's Embankment Construction Plan; G-RE

SD-06 Test Reports

Basis for Compaction Control Tests; G-RE

Field Testing Control:
In-Place Densities; G-RE

Copies of all laboratory and field test reports shall be furnished within 24 hours of the completion of the test.

PART 3 EMBANKMENT FOUNDATION PREPARATION

Topsoil shall be stripped below existing grade within the designated embankment grading lines and deposited in storage piles for later use. After stripping and removal of any unsatisfactory foundation material, all remaining cavities or other depressions shall be broken down to flatten out slopes. Immediately prior to the placement of fill material for "compacted embankment," the entire earth surface that fill is to be placed on or against shall be thoroughly broken to a depth of (6) inches and the area to be occupied by the embankment shall be compacted in accordance with the provisions specified in Part 5 below entitled EMBANKMENT CONSTRUCTION. If for any cause this foundation surface, or other fill surface to receive fill, becomes compacted in such a manner that in the opinion of the Contracting Officer a plane of seepage or weakness might be induced, the surface shall be scarified to a depth of 2-inches before placement of additional material on the surface. All slopes upon which fill is to be placed shall be notched and broken up so that the fill material will bond with the existing material. All notching, scarifying and breaking of ground surface shall be done parallel to the centerline of the embankment being constructed. All of the foregoing work shall be completed at least 200 feet in advance of the embankment construction and shall be approved by the Contracting Officer prior to placement of compacted embankment. No fill shall be placed upon frozen ground.

3.1 Drainage

The foundation receiving fill and all partially completed fill shall be kept thoroughly drained.

3.2 Existing Embankments

At locations where the levee ties to an existing earth embankment (to complete the line of protection) such embankment surface slopes shall be notched, scarified and compacted as specified above prior to construction of the levee. When directed by the Contracting Officer, such operations

shall be accomplished parallel to the axis of the existing embankment.

PART 4 EMBANKMENT MATERIALS

The compacted embankment shall be constructed of earth material consisting of impervious fill material. Impervious fill shall be obtained from required excavations as prescribed in Section 02210 GRADING and Section 02221 EXCAVATION, FILLING AND BACKFILLING FOR STRUCTURES and as shown on the drawings, or from alternate approved borrow areas arranged by the Contractor. Earth used in construction of compacted embankments shall be free from unsuitable materials.

4.1 Impervious Fill Material

Impervious fill materials shall consist of cohesive materials having at least 35% passing the U.S. Standard 200 mesh sieve size. Cohesive materials include materials classifying as CL or CH, having a plastic index of 10 or greater, and falling between the "U" line and the "A" line on figure 3 in ASTM D 2487 Standard Tests for Classification of Soils for Engineering Purposes.

4.2 Unsuitable Material

Unsuitable materials are materials containing debris, brush, roots, sod, organic matter or stones with dimensions greater than 3-inches in diameter. Under no circumstances shall frozen earth, snow or ice be placed in the embankments. No placement shall be permitted on frozen material.

4.3 Suitable Material

Suitable material for construction of compacted embankment shall include materials described in paragraph 4.1 of this section. A material will not be classified as unsuitable based on its moisture content.

PART 5 EMBANKMENT CONSTRUCTION

"Compacted embankment" as specified herein shall be placed in successive horizontal layers not more than 8-inches in depth prior to compaction. Each layer shall be spread uniformly on the previously compacted surface; plowed, dished, or otherwise broken up; moistened or aerated as necessary; and thoroughly mixed and compacted to produce embankments having the the following moisture and density requirements. If in the opinion of the Contracting Officer, the surface of any compacted layer is too smooth to bond properly with the succeeding layer, it shall be scarified to the satisfaction of the Contracting Officer before the succeeding layer is placed thereon. The Contractor shall use equipment which achieves the compaction specified below and which will not create seams between embankment lifts. The Contractor shall submit to the Contracting Officer for approval an Embankment Construction Plan including the type of equipment he will use for placement and compaction of embankment material.

5.1 Density and Moisture Control

Density and moisture control of the embankment shall be based on ASTM D 698 Standard Compaction Test for Cohesive Materials. Cohesive materials placed in embankments shall be compacted to a density of at least 95 percent of the maximum dry density and be within -2 to +3 percent of the optimum

moisture content at the time the compaction effort is applied which may require the addition of water or aeration of material.

5.1.1 Basis for Compaction Control Tests

Tests for determination of maximum density and optimum moisture shall be performed by the Contractor in accordance with ASTM D 698, except that a mechanical tamper may be used provided the results are correlated with those obtained with the referenced hand tamper. Samples shall be representative of the materials to be placed. An optimum moisture-density curve shall be obtained for each principal type of material or combination of materials encountered or utilized. Results of these tests shall be the basis of control for compaction. The above testing shall include Atterberg limits, grain size determinations and specific gravity. A copy of these tests shall be furnished to the Contracting Officer with the construction quality control daily report.

5.1.2 Sampling and Testing

The contractor shall adequately control his compaction operations based on tests conducted by the Contractor in accordance with ASTM D 1556 or ASTM D 2167. One test shall be made for each 3,000 sq yds or fraction thereof for each layer of specified depth. Additional tests may also be conducted by and at the expense of the Government for verification of compliance. Nuclear methods for determining in-place density ASTM D 2922 and moisture ASTM D 3017 may be used for up to 50 percent of tests on cohesive fills when approved by the Contracting Officer. The degree of satisfactory correlation between direct methods and nuclear methods will be considered when approving the use of nuclear methods.

PART 6 CROSS SECTIONS AND ZONING OF MATERIALS

6.1 Zoning of Materials

The levee section (compacted embankment) shall be homogeneous and constructed of impervious fill material.

6.2 Tolerances

All fill shall be constructed to the lines, grades and cross sections shown on the drawings. At all points a tolerance of not more than 3 inches above the prescribed grade will be permitted in the final dressing, provided that any excess material is so distributed that there are no abrupt humps or depressions.

PART 7 CONDUCT OF WORK AND ACCESS

7.1 Access During Construction

At locations where access roads are destroyed because of the work required under this contract, the Contractor shall provide temporary roads, if directed by the Contracting Officer, to give access during the construction period. Such facilities shall be removed after completion to the extent required by the Contracting Officer. The Contractor shall coordinate with appropriate Federal, State and County Departments of Roads to ensure that existing load limits for bridges and roads are not exceeded.

7.2 Conduct of the Work

The Contractor shall maintain and protect all embankments in a satisfactory condition at all times until final completion and acceptance of all work under this contract. Any approved embankment material which is rendered unsuitable after being placed in the embankment and before final acceptance of the work shall be replaced by the Contractor in a satisfactory manner and no additional payment will be made therefore. Haul roads shall be located and constructed as approved by the Contracting Officer. Haul roads shall be designed to maintain the intended traffic, shall be free-draining, and maintained in good condition throughout the contract period unless otherwise directed by the Contracting Officer.

PART 8 STRUCTURAL BACKFILL

Structural backfill shall be as specified in Section 02315 EXCAVATION, FILLING AND BACKFILLING FOR STRUCTURES.

SECTION TABLE OF CONTENTS

DIVISION 02 - SITE WORK

SECTION 02215

TOPSOIL

12/88

PART 1 GENERAL

1.1 DEFINITIONS
1.1.1 Acceptable Topsoil

PART 2 PRODUCTS (Not Applicable)

PART 3 EXECUTION

3.1 TOPSOILING OPERATIONS
3.1.1 Stripping Topsoil
3.1.2 Clearing
3.1.3 Grading
3.1.4 Tillage
3.1.5 Placing Topsoil
3.1.6 Maintenance and Repair

-- End of Section Table of Contents --

SECTION 02215

TOPSOIL
12/88

PART 1 GENERAL

1.1 DEFINITIONS

1.1.1 Acceptable Topsoil

Acceptable topsoil includes selectively excavated topsoil material that is representative of local soils that produce heavy growths of crops, grass, or other vegetation, and is reasonably free from underlying subsoil, clay lumps, weeds, litter, brush, matted roots, toxic substances, or any material harmful to plant growth or which would hinder grading, planting or maintanance operations. Topsoil shall not contain more than 5 percent by volume of stones or other such objects larger than 1-1/2 inches in any dimension. Topsoil shall be approved by the Contracting Officer. See Section 02921 SEEDING for additional requirements.

PART 2 PRODUCTS (Not Applicable)

PART 3 EXECUTION

3.1 TOPSOILING OPERATIONS

3.1.1 Stripping Topsoil

Topsoil shall be selectively excavated (stripped) below existing grade within the designated excavations and grading limits and placed in stockpiles as necessary for future placement as specified.

3.1.2 Clearing

Prior to placing topsoil, all vegetation on an area to be topsoiled that is sufficient to interfere with the grading or tillage operations specified below shall be removed from the area. The ground surface shall also be cleared of all other materials that would hinder proper grading, tillage or subsequent maintanance operations.

3.1.3 Grading

All previously constructed grades shall be repaired if necessary to reestablish the sections indicated on the contract drawings.

3.1.4 Tillage

Subsequent to grading indicated above, the areas shall be thoroughly scarified to a depth of at least four (4) inches by disking or plowing for the bonding of topsoil with the subsoil. The work shall be performed only during periods when beneficial results are likely to be obtained. When conditions are such, by reasons of drought, excessive moisture, or other factors, that satisfactory results are not likely to be obtained, the work shall be stopped by the Contracting Officer and shall be resumed only when directed. Undulations or irregularities in the surface that would interfere

with further construction operations or maintanance shall be leveled before the next specified operation.

3.1.5 Placing Topsoil

The topsoil shall be uniformly spread, graded and compacted to the thickness, elevations, and slopes shown. Areas to be topsoiled are indicated on the drawings. Topsoil shall be compacted by one pass of a cultipacker, roller or other approved equipment weighing 100 to 160 pounds per linear foot of roller. The spreading and finishing shall be performed in such a manner that planting can proceed with little additional soil preparation or tillage. Irregularities in the surface resulting from topsoiling or other operations shall be corrected to prevent the formation of depressions where water will stand. Topsoil shall not be placed when the subgrade is frozen, excessively wet, extremely dry, or in a condition otherwise detrimental to the proposed planting or proper grading.

3.1.6 Maintenance and Repair

The topsoiled areas shall be maintained until seeding operations have been completed and accepted. If at any time before completion and acceptance of the entire work covered by this contract, any portion of the surface becomes gullied or otherwise damaged after any part of the area has been seeded, the affected portion shall be repaired to re-establish the condition and grade of the soil prior to seeding, and shall then be reseeded as specified in SECTION 02921 SEEDING.

-- End of Section --

SECTION TABLE OF CONTENTS

DIVISION 02 - SITE WORK

SECTION 02220

DEMOLITION

12/97 (Omaha Update 12/98)

PART 1 GENERAL

1.1 REFERENCES
1.2 GENERAL REQUIREMENTS
1.3 SUBMITTALS
1.4 DUST CONTROL
1.5 PROTECTION
1.5.1 Protection of Personnel
1.5.2 Protection of Structures
1.5.3 Protection of Existing Property
1.5.4 Environmental Protection
1.6 BURNING
1.7 USE OF EXPLOSIVES

PART 2 PRODUCTS (Not Applicable)

PART 3 EXECUTION

3.1 EXISTING STRUCTURES
3.1.1 219 W 8th Street
3.1.2 1112 McDonald Street
3.1.3 415 W 19th Street
3.1.4 418 W 20th Street
3.1.5 414 W 20th Street
3.1.6 419 W 20th Street
3.1.7 421 W 23rd Street
3.1.8 3020 Center Street
3.1.9 Steel Bridge Superstructures
3.2 UTILITIES
3.3 FILLING
3.4 DISPOSITION OF MATERIAL
3.4.1 Salvageable Items and Material
3.4.1.1 Material Salvaged for the Contractor
3.4.1.2 Items Salvaged for the City of Sioux City
3.4.1.3 Historical Items
3.4.2 Unsalvageable Material
3.5 CLEAN UP
3.6 PAVEMENTS
3.7 City 28th Street Landfill

-- End of Section Table of Contents --

SECTION 02220

DEMOLITION
12/97 (Omaha Update 12/98)

PART 1 GENERAL

1.1 REFERENCES

The publications listed below form a part of this specification to the extent referenced. The publications are referred to in the text by basic designation only.

ENGINEERING MANUALS (EM)

EM 385-1-1	(1996) U.S. Army Corps of Engineers Safety and Health Requirements Manual

1.2 GENERAL REQUIREMENTS

The work includes demolition, salvage of identified items and materials, and removal of resulting rubbish and debris. Rubbish and debris shall be removed from Government property daily, unless otherwise directed, to avoid accumulation at the demolition site. Materials that cannot be removed daily shall be stored in areas specified by the Contracting Officer. In the interest of occupational safety and health, the work shall be performed in accordance with EM 385-1-1, Section 23, Demolition, and other applicable Sections. In the interest of conservation, salvage shall be pursued to the maximum extent possible; salvaged items and materials shall be disposed of as specified.

1.3 SUBMITTALS

Government approval is required for submittals with a "G" designation; submittals not having an "G" designation are for information only. The following shall be submitted in accordance with Section 01330 SUBMITTAL PROCEDURES:

SD-01 Preconstruction Submittals

Work Plan; G-RE.

The procedures proposed for the accomplishment of the work shall provide for safe conduct of the work, including procedures and methods to provide necessary supports, lateral bracing and shoring when required, careful removal and disposition of materials specified to be salvaged, protection of property which is to remain undisturbed, coordination with other work in progress, and timely disconnection of utility services. The procedures shall include a detailed description of the methods and equipment to be used for each operation, and the sequence of operations in accordance with EM 385-1-1.

1.4 DUST CONTROL

The amount of dust resulting from demolition shall be controlled to prevent

the spread of dust to occupied portions of the construction site and to avoid creation of a nuisance in the surrounding area. Use of water will not be permitted when it will result in, or create, hazardous or objectionable conditions such as ice, flooding and pollution.

1.5 PROTECTION

1.5.1 Protection of Personnel

During the demolition work the Contractor shall continuously evaluate the condition of the structure being demolished and take immediate action to protect all personnel working in and around the demolition site. No area, section, or component of floors, roofs, walls, columns, pilasters, or other structural element will be allowed to be left standing without sufficient bracing, shoring, or lateral support to prevent collapse or failure while workmen remove debris or perform other work in the immediate area.

1.5.2 Protection of Structures

Floors, roofs, walls, columns, pilasters, and other structural components that are designed and constructed to stand without lateral support or shoring, and are determined to be in stable condition, shall remain standing without additional bracing, shoring, of lateral support until demolished, unless directed otherwise by the Contracting Officer. The Contractor shall ensure that no elements determined to be unstable are left unsupported and shall be responsible for placing and securing bracing, shoring, or lateral supports as may be required as a result of any cutting, removal, or demolition work performed under this contract.

1.5.3 Protection of Existing Property

Before beginning any demolition work, the Contractor shall survey the site and examine the drawings and specifications to determine the extent of the work. The Contractor shall take necessary precautions to avoid damage to existing items to remain in place, to be reused, or to remain the property of the City of Sioux City; any damaged items shall be repaired or replaced as approved by the Contracting Officer. The Contractor shall coordinate the work of this section with all other work and shall construct and maintain shoring, bracing, and supports as required. The Contractor shall ensure that structural elements are not overloaded and shall be responsible for increasing structural supports or adding new supports as may be required as a result of any cutting, removal, or demolition work performed under this contract.

1.5.4 Environmental Protection

The work shall comply with the requirements of Section 01355 ENVIRONMENT PROTECTION.

1.6 BURNING

The use of burning at the project site for the disposal of refuse and debris will not be permitted.

1.7 USE OF EXPLOSIVES

Use of explosives will not be permitted.

PART 2 PRODUCTS (Not Applicable)

PART 3 EXECUTION

3.1 EXISTING STRUCTURES

Existing buildings and other structures indicated for removal on the drawings shall be removed in their entirety. Contractor should be aware that possible environmental concerns exist at the following structures:

3.1.1 219 W 8th Street

This former gas station could have lead-based paint on surfaces, mercury and/or PCBs in fluorescent tubes, petroleum and/or metal wastes in sludge in open floor drains, petroleum products in grease/oil hoses as well as soil surrounding the building possibly contaminated with petroleum.

3.1.2 1112 McDonald Street

This house has approximate 50 sq ft of asbestos vinyl floor tile as a sublayer in the first floor bathroom.

3.1.3 415 W 19th Street

This maintenance building has approximately 300 sq ft of asbestos containing transite wall tiles as well as mercury and/or PCBs in fluorescent tubes, drums containing unknown substances, and oil heaters.

3.1.4 418 W 20th Street

This maintenance building could have mercury and/or PCBs in fluorescent tubes and petroleum and/or metal wastes in sludge in floor drains.

3.1.5 414 W 20th Street

This maintenance building could have mercury and/or PCBs in fluorescent tubes.

3.1.6 419 W 20th Street

This house has approximately 5 sq ft of joint wrap and 10 sq ft of duct wrap on the heat system in the basement.

3.1.7 421 W 23rd Street

This house has approximately 180 sq ft of asbestos containing vinyl floor tile, and the same amount of fiber backing, in the kitchen.

3.1.8 3020 Center Street

This house has approximately 120 sq ft of asbestos containing vinyl floor tile, and the same amount of fiber backing, in the kitchen as well as approximaetly 2,220 sq ft of asbestos containing transite wall tiles.

3.1.9 Steel Bridge Superstructures

Before demolishing painted steel, the contractor shall test the surface of steel where cutting will be done to determine if lead-based paint is present. If lead-based paint is present, the contractor shall not use any process that involves hot-cutting.

3.2 UTILITIES

Existing utilities shall be removed as indicated. When utility lines are encountered that are not indicated on the drawings, the Contracting Officer shall be notified prior to further work in that area. Existing utility lines to be partially removed shall have the open ends of the conduit or pipe plugged and capped with concrete. Drainage structures shall be removed to the extent indicated.

3.3 FILLING

Holes, open basements and other hazardous openings shall be filled in accordance with Section 02212 COMPACTED EMBANKMENT .

3.4 DISPOSITION OF MATERIAL

Title to identified items/structures, material, and equipment to be demolished, except salvage belonging to the City of Sioux City and historical items, is vested in the Contractor upon receipt of notice to proceed. The City of Sioux City will not be responsible for the condition, loss or damage to such property after notice to proceed.

3.4.1 Salvageable Items and Material

Contractor shall salvage items and material to the maximum extent possible, including any riprap located in the Perry Creek channel that meets the gradation limits specified in Section 02245 STONE (RIPRAP) PROTECTION.

3.4.1.1 Material Salvaged for the Contractor

Material salvaged for the Contractor shall be stored as approved by the Contracting Officer and shall be removed from City property before completion of the contract. Material salvaged for the Contractor shall not be sold on the site.

3.4.1.2 Items Salvaged for the City of Sioux City

Salvaged items to remain the property of the City of Sioux City shall be removed in a manner to prevent damage, and packed or crated to protect the items from damage while in storage or during shipment. Items damaged during removal or storage shall be repaired or replaced to match existing items. Containers shall be properly identified as to contents.

3.4.1.3 Historical Items

Historical items shall be removed in a manner to prevent damage. The following historical items shall be delivered to the City of Sioux City for disposition: Corner stones, contents of corner stones, and document boxes wherever located on the site.

3.4.2 Unsalvageable Material

Concrete, masonry, and other noncombustible material, except concrete permitted to remain in place, shall be disposed of off site. Combustible material shall be disposed of off the site. Disposal of materials shall be in accordance with federal, state, and local regulations. All organic material in excess of that accepted by by the City landfill and all debris and rubbish not excepted by the City landfill shall become the property of

the Contractor and shall be disposed of off Government-controlled lands by and at the Contractor's expense. The location of any disposal facility located off the Government premises shall be submitted to the Contracting Officer prior to the removal from the project site in accordance with Section 02230 CLEARING AND GRUBBING. The Contractor shall submit documentation from the disposal facility to verify that it is licensed to accept the material. No material shall be removed from the project site without prior approval from the Contracting Officer. The Contractor shall not burn refuse under any circumstances.

3.5 CLEAN UP

Debris and rubbish shall be removed from basement and similar excavations. Debris shall be removed and transported in a manner that prevents spillage on streets or adjacent areas. Local regulations regarding hauling and disposal shall apply.

3.6 PAVEMENTS

Existing pavements designated for removal shall be saw cut and removed in accordance with the limits and depths indicated on the drawings.

3.7 City 28th Street Landfill

Use of the 28th Street landfill is at the Contractor's option. Excerpts of the City Code pertaining to disposal of material at the landfill are attached at the end of this specification section. The fee schedule is current as of July 2001, and is subject to change. Changes in landfill fees will be paid for by an equitable adjustment to the contract price under the CONTRACT CLAUSE titled "changes".

-- End of Section --

SECTION TABLE OF CONTENTS

DIVISION 02 - SITE WORK

SECTION 02230

CLEARING AND GRUBBING

06/97

PART 1 GENERAL

1.1 DEFINITIONS
1.1.1 Clearing
1.1.2 Grubbing
1.2 SUBMITTALS

PART 2 PRODUCTS (Not Applicable)

PART 3 EXECUTION

3.1 CLEARING
3.2 GRUBBING
3.3 DISPOSAL OF MATERIALS
3.3.1 Materials\Products of Clearing and Grubbing

-- End of Section Table of Contents --

SECTION 02230

CLEARING AND GRUBBING
06/97

PART 1 GENERAL

1.1 DEFINITIONS

1.1.1 Clearing

Clearing shall consist of the felling, trimming, and cutting of trees into sections and the satisfactory disposal of the trees and other vegetation designated for removal, including down timber, snags, brush, and rubbish occurring in the areas to be cleared.

1.1.2 Grubbing

Grubbing shall consist of the removal and disposal of stumps, roots larger than 1 inches in diameter, and matted roots from the designated grubbing areas.

1.2 SUBMITTALS

Government approval is required for submittals with a "G" designation; submittals not having a "G" designation are for information only. When used, a designation following the "G" designation identifies the office that will review the submittal for the Government. The following shall be submitted in accordance with Section 01330 SUBMITTAL PROCEDURES:

SD-07 Certificates

Materials\Products of Clearing and Grubbing; G-RE

Written permission to dispose of products of clearing and grubbing on private property shall be filed with the Contracting Officer.

PART 2 PRODUCTS (Not Applicable)

PART 3 EXECUTION

3.1 CLEARING

Trees, stumps, roots, brush, and other vegetation in areas to be cleared shall be cut off flush with or below the original ground surface, except such trees and vegetation as may be indicated or directed to be left standing. Areas to be cleared consist of all areas within grading limits including temporary road construction, and areas as otherwise indicated. Clearing shall also occur within the temporary construction easement area as necessary to accommodate storage of equipment, etc. Trees designated to be left standing within the cleared areas shall be trimmed of dead branches 1-1/2 inches or more in diameter and shall be trimmed of all branches the heights indicated or directed. Limbs and branches to be trimmed shall be neatly cut close to the bole of the tree or main branches. Cuts more than 1-1/2 inches in diameter shall be painted with an approved tree-wound

paint. Trees and vegetation to be left standing shall be protected from damage incident to clearing, grubbing, and construction operations by the erection of barriers or by such other means as the circumstances require. Clearing shall also include the removal and disposal of loose rock, boulders, and structures that obtrude, encroach upon, or otherwise obstruct the work.

3.2 GRUBBING

Areas to be grubbed consist of all areas to be cleared as indicated above and areas as otherwise indicated. Material to be grubbed, together with logs and other organic materials, loose rock and boulders, or metallic debris and other debris not suitable for foundation purposes, shall be removed to a depth of not less than 18 inches below the original surface level of the ground in areas indicated to be grubbed and in areas indicated as construction areas under this contract, such as areas for buildings, and areas to be paved. Depressions made by grubbing shall be filled with suitable material and compacted to make the surface conform with the original adjacent surface of the ground.

3.3 DISPOSAL OF MATERIALS

3.3.1 Materials\Products of Clearing and Grubbing

Logs, stumps, roots, brush, rotten wood, loose rock, boulders, and other debris or refuse from the clearing and grubbing operations shall be disposed of at the City landfill location shown on the contract drawings. All disposal of material shall be in accordance with paragraph 3.4 DISPOSITION OF MATERIAL of Section 02220, DEMOLITION. Disposal of materials shall be in accordance with federal, state, and local regulations. All organic material in excess of that accepted by by the City landfill and all debris and rubbish not excepted by the City landfill shall become the property of the Contractor and shall be disposed of off Government-controlled lands by and at the Contractor's expense. The location of any disposal facility located off the Government premises shall be submitted to the Contracting Officer prior to the removal from the project site. The Contractor shall submit documentation from the disposal facility to verify that it is licensed to accept the material. No material shall be removed from the project site without prior approval from the Contracting Officer. The Contractor shall not burn refuse under any circumstances.

-- End of Section --

SECTION TABLE OF CONTENTS

DIVISION 02 - SITE WORK

SECTION 02245

STONE (RIPRAP) PROTECTION

04/00

PART 1 GENERAL

1.1 REFERENCES
1.2 SUBMITTALS
1.3 GENERAL
1.4 WAYBILLS AND DELIVERY TICKETS
1.5 SAMPLING AND TESTING
1.5.1 General Requirements
1.5.2 Material Verification
1.5.3 Initial Sampling and Testing Requirements
1.5.3.1 Bulk Specific Gravity
1.5.3.2 Soundness in Magnesium Sulfate
1.5.3.3 Soundness in Freezing and Thawing
1.5.3.4 Immersion
1.5.3.5 Freeze-Thaw Testing for Riprap

PART 2 PRODUCTS

2.1 STONE PROTECTION MATERIALS
2.1.1 General Requirements
2.1.2 Riprap
2.1.2.1 Riprap Weight Limitations
2.1.3 Spalls
2.1.3.1 Spalls Gradation
2.1.4 Bedding Material
2.1.4.1 Bedding Gradation for Type A Riprap
2.1.4.2 Bedding Gradation for Type B, Type C, and Type D Riprap

PART 3 EXECUTION

3.1 GENERAL
3.2 PLACEMENT
3.2.1 Bedding
3.2.2 Spalls
3.2.3 Riprap
3.2.4 Field Gradation
3.2.4.1 General
3.2.4.2 Bedding
3.2.4.3 Spalls
3.2.4.4 Riprap
3.3 GROUT EMBEDMENT OF RIPRAP
3.3.1 Grout Mixture
3.3.2 Batching, Mixing, and Transporting
3.3.3 Grouting Riprap
3.3.3.1 Preparation for Grouting
3.3.3.2 Cold Weather Requirements

3.3.3.3 Grouting
3.3.4 Curing and Protection
3.3.5 Testing and Certification
3.4 PROTECTION

-- End of Section Table of Contents --

SECTION 02245

STONE (RIPRAP) PROTECTION
04/00

PART 1 GENERAL

1.1 REFERENCES

The publications listed below form a part of this specification to the extent referenced. The publications are referred to in the text by basic designation only.

AMERICAN SOCIETY FOR TESTING AND MATERIALS (ASTM)

ASTM C 33	(1999) Specification for Concrete Aggregates
ASTM C 88	(1990) Soundness of Aggregates by Use of Sodium Sulfate or Magnesium Sulfate
ASTM C 94	(1998c) Specification for Ready-Mixed Concrete
ASTM C 127	(1993) Specific Gravity and Absorption of Coarse Aggregate
ASTM C 143	(1998) Test Method for Slump of Hydraulic Cement Concrete
ASTM C 231	(1997) Test Method for Air Content of Freshly Mixed Concrete by the Pressure Method
ASTM C 494	(1998a) Specification for Chemical Admixtures for Concrete
ASTM D 75	(1992) Standard Practice for Sampling Aggregate

AMERICAN ASSOCIATION OF STATE HIGHWAY AND TRANSPORTATION OFFICIALS (AASHTO)

AASHTO T 103	(1991) Soundness of Aggregates by Freezing and Thawing

1.2 SUBMITTALS

Government approval is required for submittals with a "G" designation; submittals having a "G" designation are for information only. When used, a designation following the "G" designation identifies the office that will review the submittal for the Government. The following shall be submitted

in accordance with Section 01330 SUBMITTAL PROCEDURES:

SD-06 Test Reports

Initial Sampling and Testing; G-RE.

Field Gradation; G-RE.

Field gradation test results for riprap, spalls, and bedding mailed within ten (10) days after completion of the tests.

Certified Test Results for Grout Materials and Mixture; G-RE

SD-07 Certificates

Waybills and Delivery Tickets; G-RE.

1.3 GENERAL

The work specified herein consists of construction of stone protection as shown on the drawings and as directed by the Contracting Officer. Stone protection material shall consist of all stone to be furnished for riprap, spalls, and bedding material. The Contractor shall control operations during production of stone protection material so as to insure that the material delivered and placed will meet all specification requirements. The Contractor shall perform all sampling and testing required for quality control in accordance with Section 01451 CONTRACTOR QUALITY CONTROL and as specified herein. The quarry operators shall be responsible for operating all quarries and for conditioning the area after operations are complete, in accordance with all applicable Federal, State, and local laws and regulations. In addition to placement of stone protection, all scour holes of 48-inch diameter or larger storm drain pipes (i.e., the riprap surface of the Type A, B, or C storm drain outlets) shall be totally embedded with grout as specified below.

1.4 WAYBILLS AND DELIVERY TICKETS

Copies of waybills or delivery tickets shall be submitted during the progress of the work. Before the final payment is allowed, waybills and certified delivery tickets shall be furnished for all stone protection materials actually used in the construction.

1.5 SAMPLING AND TESTING

1.5.1 General Requirements

The Contractor shall be responsible for all sampling and testing specified herein. The Government may perform verification tests as determined necessary for final approval of the stone protection material. All samples including samples taken during production shall be representative of the stone protection material furnished or proposed to be furnished. Samples shall be taken in accordance with ASTM D 75 or other approved method. All sampling operations shall take place in the presence of the Contracting Officer or a representative of the Contracting Officer. At the same time samples for initial tests are obtained, the ledge or ledges in quarries sampled shall be marked with an approved semi-permanent marking which will be readily visible during the period of riprap production. No rock shall be furnished from any ledge that has not been sampled, tested, and approved for use on this project. The Contracting Officer has the option to select

samples from stockpiles at the production facility (quarry) or at the construction site.

1.5.2 Material Verification

Results shall verify that materials comply with this specification. When a material source is changed, the new material will be tested for compliance. When deficiencies are found, the initial analysis shall be repeated and the material already placed shall be retested to determine the extent of unacceptable material. All in-place unacceptable material shall be replaced or modified as directed by the Contracting Officer.

1.5.3 Initial Sampling and Testing Requirements

Tests for bulk specific gravity, soundness in magnesium sulfate, and soundness in freezing and thawing shall be performed on samples of material obtained from each ledge proposed for use as stone protection prior to start of construction. Test results shall describe type of failure of the discrete particles. Certified test results performed not longer than 12 months prior to delivery to the project together with the name of the owner of the quarry and the legal description shall be submitted to the Contracting Officer. The Contractor shall submit the name and location of each quarry proposed for use along with a geologic section of each quarry indicating the various rock units identified by geologic name of formation and member and indicate from what ledge the samples were obtained.

1.5.3.1 Bulk Specific Gravity

Bulk specific gravity shall be computed in accordance with ASTM C 127 except that the total sample shall weigh 5000 grams +2 percent and individual particles shall weigh approximately 300 grams each. Stone protection material shall be tested in a saturated surface-dry (SSD) condition. The computed bulk specific gravity so determined shall not be less than 2.55.

1.5.3.2 Soundness in Magnesium Sulfate

Soundness in magnesium sulfate shall be determined according to ASTM C 88 with test modifications as listed below. The combined loss at 5 cycles shall be not more than 8 percent. The test report shall show the percentages of loss calculated as described herein and the number of pieces affected, classified as to number disintegrating, splitting, crumbling, cracking, flaking, etc.

a. Sample Preparation

The sample shall be prepared by breaking it into fragments reasonably uniform in size and shape and weighing approximately 100 grams each. The test sample shall weigh 5000 grams +/- 2 percent. The sample shall be thoroughly washed and dried previous to test as described for coarse aggregate.

b. Sample Immersion and Temperature

The sample immersed in the solution shall be maintained at a temperature of 80 degrees F +/- 2 degrees F for the immersion period.

c. Quantitative Examination

At the end of the fifth cycle, the percentage loss shall be determined by the three following methods. The test report shall show the loss computed by each method; however, only the combined loss shall be used for acceptance or rejection of the material.

1) Loss By Breaking

An individual piece which has broken or split into three or more fragments shall be considered to have failed the test, provided each of the three such fragments is at least 10 percent of the original piece by weight. The total original weight of all pieces failing the test, expressed as percentage of the total original weight of the sample, shall be considered as percentage loss by breaking.

2) Loss By Crumbling and Flaking

After the loss by breaking has been determined, the pieces that have not failed in that determination shall be screened on the 1/2-inch sieve and the material retained on the sieve shall be weighed for purposes required to determine combined losses. The pieces which have failed by breaking shall then be added to the material remaining on the 1/2-inch sieve and screened. The difference between the total original weight of the sample and the total weight of the material retained on the 12.5 mm sieve expressed as percentage of the total original weight, shall be considered as percentage loss by crumbling and flaking.

3) Combined Loss

The difference between the total original weight of the sample and the weight of the material retained on the 1/2-inch sieve, after screening the pieces which did not fail by breaking, expressed as percentage of the total original weight, shall be considered as percentage combined loss.

1.5.3.3 Soundness in Freezing and Thawing

The test for freezing and thawing shall consist of AASHTO T 103, Ledge Rock Method, Procedure C, modified as follows. Average loss at 50 cycles for five test specimens shall not exceed 10.0 percent and maximum loss of any one specimen of the five shall not exceed 35.0 percent. The average number of "pieces" remaining in each each of five test specimens at the end of the test shall not exceed three and maximum number of pieces remaining in any one specimen shall not exceed four. The test report shall shall describe the type of failure of the discrete particles. AASHTO T 103 test shall be performed on bedding and spalls material only. See paragraph 1.5.3.5 for freeze-thaw testing of riprap.

a. Temperature

The temperature of the surrounding medium during freezing shall be maintained in the range of -20 to -10 degrees F.

b. Freeze/Thaw Cycle

The length of a freezing and thawing cycle shall be sufficient to totally freeze and totally thaw each piece of the sample during each cycle. The laboratory shall specifically determine for each sample that the cycle used is sufficient to accomplish total freezing and total thawing and shall report this in the test report. However, in no case shall the cycle consist of less than 2-1/2 hours of freezing followed by 1 hour of thawing.

The sample shall be held in the frozen condition whenever necessary to break the cycle (overnight, weekends, etc.).

1.5.3.4 Immersion

Procedure C, Partial Immersion shall be used, except that soaking prior to testing shall be in accordance with Procedure A.

1.5.3.5 Freeze-Thaw Testing for Riprap

Testing of riprap shall be in accordance with Corps of Engineers CRD-C 144, Standard Test Method for Resistance of Rock to Freezing and Thawing. The maximum loss at 20 cycles shall not exceed 20 percent by weight.

PART 2 PRODUCTS

2.1 STONE PROTECTION MATERIALS

2.1.1 General Requirements

All stone for stone protection shall be durable quarried Sioux Quartzite rock as approved by the Contracting Officer. Individual pieces of stone protection in-place shall be free from cracks, seams, and other defects that will cause rapid or excessive deterioration or degradation during service. The bulk stone protection material delivered to the project shall be of such quality that tests performed on representative samples have results within the limits specified. The stone protection shall contain not more than 5 percent of undesirable material by weight. Undesirable material is defined as individual pieces of stone which do not meet the quality requirements when tested as specified herein and which can be visually differentiated from the satisfactory pieces, plus dirt, sand, clay, and rock fines. Stone protection material shall not contain disintegrated granite or shale. The Contractor shall select the source or sources he proposes to use and perform the initial sampling and testing of the materials well in advance of the time when the material will be required in the work.

2.1.2 Riprap

The riprap shall consist of stone meeting the requirements specified herein and shall be in pieces approximately rectangular in cross section, free from thin slabby pieces having a maximum dimension more than four times the least dimension. Stone for riprap shall be reasonably well graded from coarse to fine. Dirt and fines of less than 1/2-inch maximum cross section, accumulated from interledge layers or from blasting or handling operations shall not exceed 5 percent by weight.

2.1.2.1 Riprap Weight Limitations

The riprap shall be reasonably well-graded. Selected points from the limiting gradation curves are shown on the tables below. Riprap type consists of four gradations and are defined as Type A, Type B, Type C, and Type D.

Riprap Type A (15-inch Layer Thickness)

Percent Lighter by Weight	Limit of Stone Weight in Lbs.

100	169-67
50	50-34
15	25-11

Riprap Type B (24-inch Layer Thickness)

Percent Lighter by Weight	Limit of Stone Weight in Lbs.
100	691-276
50	205-138
15	102-43

Riprap Type C (27-inch Layer Thickness)

Percent Lighter by Weight	Limit of Stone Weight in Lbs.
100	984-394
50	292-197
15	146-62

Riprap Type D (33-inch, 48-inch, & 54-inch Layer Thickness)

Percent Lighter by Weight	Limit of Stone Weight in Lbs.
100	1797-719
50	532-359
15	266-112

2.1.3 Spalls

Spalls shall be at least equal in quality to that of the stone used for riprap and shall be well graded between the sizes specified. Spalls material shall be quarried stone, crushed cobbles, and crushed gravel consisting of particles having at least one fractured face. The material shall be composed of tough, durable particles, shall be reasonably free from thin, flat and elongated pieces, and shall contain no organic matter nor soft, friable particles in quantities considered objectionable by the Contracting Officer.

2.1.3.1 Spalls Gradation

Specified spalls gradation requirements shall apply to the completed spalls material. The spalls material shall be continuously graded within the following limits:

Spalls (9" Layer & 12" Layer Thickness)

Sieve Designation	Percentage by Weight Passing Square-mesh Sieve
4"	90-100
2"	45-75
1"	15-40
#4	0-10

2.1.4 Bedding Material

Bedding material shall be at least equal in quality to that of the stone used for riprap and shall be well graded between the sizes specified. Bedding material shall be quarried stone, crushed cobbles, and crushed gravel consisting of particles having at least one fractured face. The material shall be composed of tough, durable particles, shall be reasonably free from thin, flat and elongated pieces, and shall contain no organic matter nor soft, friable particles in quantities considered objectionable by the Contracting Officer.

2.1.4.1 Bedding Gradation for Type A Riprap

Specified bedding gradation requirements shall apply to the completed bedding material. The bedding material shall be continuously graded within the following limits:

Bedding for Type A Riprap (9" Layer Thickness)

Sieve Designation	Percentage by Weight Passing Square-mesh Sieve
2"	100
1"	80-100
1/2"	60-80
#4	40-60
#40	15-25
#200	0-5

Optional Bedding Gradation for Type A Riprap:

Bedding material shall meet the requirements of the Iowa Department of Transportation (IDOT), "Standard Specifications for Highway and bridge construction," Series 1992, section 4126 Aggregate for Type B Asphalt Cement concrete, gradation No. 24.

2.1.4.2 Bedding Gradation for Type B, Type C, and Type D Riprap

Specified bedding gradation requirements shall apply to the completed bedding material. The bedding material shall be continuously graded within the following limits:

Bedding for Type B, Type C, and Type D Riprap (9" Layer & 12" Layer Thickness)

Sieve Designation	Percentage by Weight Passing Square-mesh Sieve
3/4"	90-100
#4	65-85
#16	20-60
#200	0-10

PART 3 EXECUTION

3.1 GENERAL

Quarry operations shall be controlled to produce a reasonably well-graded stone of required size, and the Contracting Officer may require changes as necessary to produce the required product. The Contractor's operations shall be conducted in a manner that will produce stone meeting the requirements specified and shall include selective quarrying, handling, and loading as required. Spalls and bedding composed of the specified material shall be placed on the prepared bedding or subgrade where indicated on the drawings to form a backing for the riprap protection.

3.2 PLACEMENT

3.2.1 Bedding

Bedding material shall be spread uniformly on the prepared subgrade in a satisfactory manner to the slope lines, thickness, and grades indicated on the drawings or as directed. Placing of material by methods which will tend to segregate particle sizes within the bedding will not be permitted. Any damage to the surface of the bedding foundation during placing of the bedding shall be repaired before proceeding with the work. Compaction of the bedding material will not be required but it shall be finished to present a reasonably even surface free from depressions, mounds, or windrows.

3.2.2 Spalls

Spalls material shall be spread uniformly on the prepared bedding layer in a satisfactory manner to the slope lines, thickness, and grades indicated on the drawings or as directed. Placing of material by methods which will tend to segregate particle sizes within the spalls will not be permitted. Any damage to the surface of the bedding layer during placing of the spalls shall be repaired before proceeding with the work. Compaction of the spalls material will not be required but it shall be finished to present a reasonably even surface free from depressions, mounds, or windrows.

3.2.3 Riprap

Riprap shall be placed on the spalls or bedding material within the limits shown on the drawings or as directed by the Contracting Officer. Riprap protection stone shall be placed in such manner as to produce a reasonably well-graded mass of rock with the minimum practicable percentage of voids. Riprap shall be placed to its full course thickness in one operation and in such manner as to avoid damage to the spalls or bedding and to minimize segregation of the riprap material. The larger stones shall be well distributed in each layer and the entire mass of stones in their final positions shall be roughly graded to conform to the gradation specified. The finished riprap rock shall be free from objectionable pockets of small stones and clusters of larger stones. Placing riprap in layers will not be permitted. The desired distribution of the various sizes of stones throughout the mass shall be obtained by selective loading of the material at the quarry or other source and by controlled dumping of successive loads during final placing and placement. All stone shall be placed by means of clam, orange peel, or skip box. However, zero drop height placement procedures are to be utilized for riprap stone to avoid displacing or damaging the underlying spalls or bedding. Dumping of stone at the top of slopes and rolling or pushing into place will not be permitted. Manipulating or moving stone at any time prior to placement by means of dozers or other blade equipment will not be permitted. Rearranging of

individual stones by mechanical equipment or by hand will be required to the extent necessary to obtain a reasonably well graded distribution of stone sizes as specified above. Underwater placment of rock may be required. The rock shall be placed underwater to these placement specifications as much as practicable. The method of underwater placement shall be approved by the Contracting Officer.

3.2.4 Field Gradation

3.2.4.1 General

If the material fails to meet the gradation limits specified, the Contractor shall discontinue placement of the material and adjust his operations or he shall propose another source. The Contractor shall verify with the necessary additional tests that acceptable materials are being produced. Tests which do not pass the gradation requirements will not be counted in the additional required tests above. All field tests will be performed by the Contractor at his expense.

3.2.4.2 Bedding

Field gradation tests of bedding material shall be performed by the Contractor after it has been placed. Samples shall be taken for each 2,500 square yards of each layer of material placed in each area from locations directed by the Contracting Officer. Samples shall be tested for gradation according to ASTM C 136.

3.2.4.3 Spalls

Field gradation tests of spalls material shall be performed by the Contractor after it has been placed. Samples shall be taken for each 2,500 square yards of each layer of material placed in each area from locations directed by the Contracting Officer. Samples shall be tested for gradation according to ASTM C 136.

3.2.4.4 Riprap

Field gradation tests of riprap material shall be performed by the Contractor on riprap to determine if the material as delivered to the job meets the gradation requirements of this specification. A sample consisting of 4 to 8 tons shall be taken of each material delivered to the job and checked for gradation and elongation. The material from the initial test that meets specifications shall be placed in a well marked area as designated by the Contracting Officer to serve as a visual model for acceptable material. Material that does not meet specifications shall not be counted as a required test. The Contractor shall state in writing the method used in blasting, processing, loading, and handling this sample, and shall notify the Contracting Officer any time any production methods are changed. Riprap material shall not be placed until the material delivered to the job has passed a field gradation testing. Gradation tests shall be performed according to ASTM D 5519. At the discretion of the Contracting Officer, random loads will be dumped or the in-place material will be sampled and a gradation control check shall be performed by the Contractor at the discretion and under the supervision of the Contracting Officer.

3.3 GROUT EMBEDMENT OF RIPRAP

All riprap material placed in areas indicated on the drawings or as

directed by the Contracting Officer to be grouted shall be grouted in-place as specified herein. All materials, mix proportions, and placement procedures shall be subject to approval of the Contracting Officer.

3.3.1 Grout Mixture

The "grout" mixture shall be air-entrained concrete composed of portland cement, an air-entraining agent, fine aggregate conforming to ASTM C 33, and water. A water-reducing admixture conforming to ASTM C 494 that will not promote bleeding may also be used in the grout mixture. Cement content shall be 611 pounds (6.5 sacks) per cubic yard. Total air content shall be between 6 and 9 percent as designated by ASTM C 231. Water content of the mixture shall be as necessary to produce a slump between 4 and 7 inches as the grout is discharged from the mixer, measured in accordance with ASTM C 143. However, the maximum water-cement ratio shall not exceed 0.50.

3.3.2 Batching, Mixing, and Transporting

Equipment and procedures for batching, mixing, and transporting grout shall conform to the requirements specified in ASTM C 94 regardless of whether ready-mixed or job-mixed grout is used.

3.3.3 Grouting Riprap

The grout shall be used in the work within one hour after materials are batched. Retempering grout will not be permitted.

3.3.3.1 Preparation for Grouting

Before grouting operations commence at any location, all riprap, biodegradable barrier, and bedding shall be in place with the material and placement approved. Prior to grouting, the surfaces of the riprap shall be washed with a high pressure water jet, using care to clean surfaces throughout the riprap layer indicated to be grouted, insofar as possible. Care shall also be taken to prevent removal, erosion, or other damage to bedding material or foundation soils during the washing operation. Riprap surfaces shall be moist at the time of grout placement but shall not contain free water.

3.3.3.2 Cold Weather Requirements

Riprap shall not be grouted when the ambient temperature is below 35 degrees F., nor when the grout is likely to be subjected to freezing temperatures during the first 24 hours after placement. In no case shall grout be placed when there is any indication that snow or ice is present in the riprap layer or that any of the riprap material is frozen.

3.3.3.3 Grouting

The riprap shall be grouted in successive horizontal strips, not to exceed 10 feet in width. Each batch of grout shall be dumped on the surface of the riprap at its final placing location. Immediately after the batch of grout is dumped, it shall be distributed over the surface by appropriate means and shall be worked into place in the interstices of the riprap with spades, rods, and vibrating equipment. All grout in riprap voids shall be consolidated with standard internal-type mechanical concrete vibrators with heads either sufficiently small to be inserted into the voids of the riprap or sufficiently large to vibrate the individual pieces of riprap from the surface and conslidate the grout by transmitted vibrations. Adequate

precautions shall be taken to prevent grout from penetrating the bedding layer. A thin biodegradable barrier or similar material shall be used between the bedding and riprap layers in the grouted riprap sections. The type of barrier used shall be approved by the Contracting Officer. In general, the upper surface of the riprap shall be kept free of grout, insofar as possible to provide a natural appearance to the rock. However, any pieces of riprap lying at the surface, which are not completely immobilized, shall be surrounded with sufficient grout to completely immobilize and anchor the rock.

3.3.4 Curing and Protection

After completion of each days work, no workmen or other load shall be permitted on the grouted area for 24 hours. The grouted area shall be protected from rain, flowing water, and mechanical injury. The exposed surface of the grout shall be cured by keeping the surface continually wet for a period of not less than 7 days. When the air temperature is expected to drop below 35 degrees F., newly placed grout and any other grout less than 7 days old shall be protected by covering with a layer of polyethylene sheeting and not less than 12 inches of loose, dry hay or straw, which shall be retained in place for the duration of the curing period, or by other approved means of equal effectivness.

3.3.5 Testing and Certification

The Contractor shall submit certification that all materials and the grout mixture used meet all requirements specified hereinbefore. The Contractor shall conduct at least one test for air content and slump of the mixture for each day riprap is grouted. Copies of the test results shall be furnished to the Contracting Officer as soon as tests are performed. The Government may perform verification tests for final approval of the material in the grout mixture.

3.4 PROTECTION

The Contractor shall maintain the riprap until accepted and any material displaced by any cause shall be replaced at his expense to the lines and grades shown on the drawings.

-- End of Section --

SECTION TABLE OF CONTENTS

DIVISION 02 - SITE WORK

SECTION 02310

DRAINAGE STRUCTURES IN CHANNEL

01/99

PART 1 GENERAL

1.1 SUMMARY OF WORK
1.2 GENERAL
1.3 REFERENCES
1.4 GUARANTEE
1.5 SUBMITTALS

PART 2 PRODUCTS

2.1 MATERIALS
2.1.1 Structural Steel
2.1.2 Steel Handrails, Including Carbon Steel Inserts
2.1.3 Cast Iron Gate Leaves, Frames, Guides and Thimbles
2.1.4 Bolts
2.1.4.1 Expansion Anchors
2.1.5 Nuts
2.1.6 Washers
2.1.7 Ladders
2.1.8 Paints
2.1.8.1 Coal-tar Paints for Cast-iron Flap Gates
2.1.8.2 Paint Certification
2.1.9 Precast Concrete Pipe
2.1.10 Timber for Piling and Stringers
2.1.10.1 Preservative Treatment
2.1.11 Metal Couplers for RCP

PART 3 EXECUTION

3.1 STEEL AND METAL ASSEMBLIES
3.1.1 Ladders
3.1.2 Welding
3.1.3 Galvanizing
3.1.3.1 Regalvanizing
3.1.3.2 Field Repair
3.1.3.3 Field or Shop Repair Option
3.2 EXCAVATION AND BACKFILL OF STORM DRAIN STRUCTURES
3.3 INSTALLATION OF PIPE
3.3.1 Shaped Bedding
3.3.2 Placing of Precast Concrete Pipe
3.3.3 Cradle Foundation
3.3.3.1 Constructing Concrete Cradle
3.3.4 Gaskets and Jointing Materials
3.4 SLUICE GATES
3.4.1 General
3.4.2 Frames

3.4.3 Wall Thimble
3.4.4 Gate Guides
3.4.5 Gate Leaf
3.4.6 Stems, Couplings and Stem Guides
3.4.7 Materials
3.4.8 Floor Stand and Gear Box
3.4.9 Installation
3.4.10 Sluice Gates Anodes
3.5 AUTOMATIC, EXTERNAL TYPE FLAP GATES AND FRAMES
3.5.1 General
3.5.2 Cast-Iron Flap Gates
3.5.3 Structural Stainless Steel Flap-Gates
3.5.4 Connecting Bolts, Anchor Bolts and Hinge Pins
3.5.5 Side-hinged Gates
3.5.6 Angle-hinged and Top-hinged Round Flap Gates
3.5.7 Tolerances
3.6 INSTALLATION OF STEEL HANDRAILS
3.7 TIMBER PILING
3.7.1 Piles
3.7.1.1 Pile Preparation and Acceptance
3.7.1.2 Stringers
3.7.2 Placing
3.7.3 Driving
3.8 PAINTING
3.8.1 Floor Stands, Gear Boxes and Stem Covers
3.8.2 Flap Gates
3.8.3 Preparation of Surfaces
3.8.4 Touch-up Painting
3.9 TESTING
3.9.1 Hydrostatic Tests for Concrete Pipe Under Levees or Floodwalls or Extending Into the Channel
3.9.1.1 Shop Testing Concrete Pipe
3.9.1.2 Field Joint Tests
3.9.1.3 Defects or Visible Leakage from Joints or Pipe
3.9.2 Tests for Acceptance of Materials
3.9.3 Tests for Sluice Gate

-- End of Section Table of Contents --

SECTION 02310

DRAINAGE STRUCTURES IN CHANNEL
01/99

PART 1 GENERAL

1.1 SUMMARY OF WORK

The work covered by this section consists of furnishing all plant, labor, equipment, supplies and materials and performing all operations necessary to construct the gatewell structure, sluice gate, install the reinforced, precast concrete pipe, flap gates, timber piling at the storm drain structures in the channel, and related work as shown on the drawings and specified herein.

1.2 GENERAL

The kind, size, and the location, grade, length and alignment of structures are indicated on the drawings; except that the Contracting Officer may direct some change in grade, length and alignment to accommodate field conditions.

1.3 REFERENCES

The publications listed below form a part of this specification to the extent referenced. The publications are referred to in the text by basic designation only.

AMERICAN SOCIETY FOR TESTING AND MATERIALS PUBLICATIONS (ASTM)

ASTM A 36	(1984) Structural Steel
ASTM A 123	(1984) Zinc (Hot Galvanized) Coating on Products Fabricated from Rolled Pressed and Forged Steel Shapes, Plates, Bars and Strip
ASTM A 126	(1984) Gray Iron Castings for Valves, Flanges, and Pipe Fittings
ASTM A 153	(1982) Zinc Coating (Hot-Dip) on Iron & Steel Hardware
ASTM A 276	Stainless Steel Bars and Shapes
ASTM A 307	Carbon Steel Bolts and Sturdy, 60,000 PSI Tensile Strength
ASTM A 563	(1994) Carbon & Alloy Steel Nuts
ASTM C 76	(1985) Reinforced Concrete Culvert, Storm Drain and Sewer Pipe
ASTM C 361	(1990) Reinforced Concrete Low-Head

	Pressure Pipe
ASTM C 443	(1985a) Joints for Circular Concrete Sewer and Culvert Pipe, Using Rubber Gaskets

AMERICAN ASSOCIATION OF STATE HIGHWAY AND TRANSPORTATION OFFICIALS (AASHTO)

AASHTO M 168	(1984) Standard Specification for Wood Products
AASHTO M 170	(1985) Reinforced Concrete Culvert, Storm Drain, and Sewer Pipe

AMERICAN NATIONAL STANDARDS INSTITUTES (ANSI)

ANSI B 18.2.2	(R1993) Square and Hex Nuts (Insch Series)

AMERICAN WOOD-PRESERVERS' ASSOCIATION (AWPA)

AWPA C2	(1995) Lumber, Timber, Bridge Ties & Mine Ties - Preservative Treatment by Pressure Processes
AWPA C3	(1993) Piles - Preservative Treatment by Pressure Processes
AWPA M4	(1991) Standard for Care of Preservative-Treated Wood Products
AWPA P5	(1995) Standards for Waterborne Preservatives

AMERICAN WELDING SOCIETY, INC. (AWS)

AWS D1.1	(1996) Code for Structural Steel Welding
AWS D1.2	(1990) Structural Welding Code-Aluminum

STEEL STRUCTURES PAINTING COUNCIL SPECIFICATIONS (SSPC)

SSPC Paint 16	(1991) Coal Tar Epoxy-Polyamide Black (or Dark Red) Paint
SSPC Paint 20	(1991) Zinc-Rich Primers (Type I - Inorganic & Type II - Organic)
SSPC Paint 27	(1991) Basic Zinc Chromate-Vinyl Butyryl Wash Primer
SSPC SP 1	(1982) Solvent Cleaning

1.4 GUARANTEE

The Contractor shall guarantee that work executed under this section of the specification will be free from defects in material and workmanship for a period of one year from the date of beneficial use or final acceptance, whichever is earlier. Upon receipt of notice from the Government or failure of the guaranteed work or materials during the guaranteed period,

the affected work or material shall be replaced promptly at the expense of the Contractor.

1.5 SUBMITTALS

Government approval is required for submittals with a "GA" designation; submittals having an "FIO" designation are for information only. The following shall be submitted in accordance with Section 01330 SUBMITTAL PROCEDURES:

SD-02 Shop Drawings

Precast Concrete Pipe; G-RE.

Reinforced concrete pipe including joint details.

Sluice Gates; G-RE.

Including thimbles and appurtenances.

Flap Gates; G-RE.

Including appurtenances.

SD-06 Test Reports

Precast Concrete Pipe;

Testing;

Certified copies of laboratory test reports, including all test data. Copies of field tests shall also be submitted.

SD-07 Certificates

Materials;

Manufacturer's Certification of Compliance, that all materials used on this project meet the requirements of the specification under which it is furnished.

Certified copies of welders qualification test records showing qualification in accordance with AWS D1.1 and/or AWS D1.2.

PART 2 PRODUCTS

2.1 MATERIALS

Materials shall conform to the requirements of the following.

2.1.1 Structural Steel

ASTM A 36.

2.1.2 Steel Handrails, Including Carbon Steel Inserts

Steel handrails, including inserts in concrete, shall be steel pipe conforming to ASTM A 53 or structural tubing conforming to ASTM A 500, Grade A or B of equivalent strength. Exterior railings shall be hot-dip

galvanized. Pipe collars shall be steel and hot-dip galvanized. Joint posts, rail, and corners shall be fabricated by one of the following methods:

(1) Flush-type rail fittings of commercial standard, welded and ground smooth with railing splice locks secured with 3/8-inch hexagonal-recessed-head setscrews.

(2) Mitered and welded joints made by fitting post to top rail and intermediate rail to post, mitering corners, groove welding joints, and grinding smooth. Butt railing splices and reinforce them by a tight fitting interior sleeve not less than 6 inches long.

(3) Railings may be bent at corners in lieu of jointing, provided bends are made in suitable jigs and the pipe is not crushed.

2.1.3 Cast Iron Gate Leaves, Frames, Guides and Thimbles

Shall conform to ASTM A 126. Class B.

2.1.4 Bolts

Shall conform to ASTM A 307 galvanized in accordance with ASTM A 153.

2.1.4.1 Expansion Anchors

Shall be wedge type that have tested and listed in the International Conference of Building Officials (ICBO) and in the Underwriters Laboratories (UL). Anchor bolts shall be stainless steel or galvanized of the sizes indicated on the drawings. The anchors shall provide a minimum allowable tensile load of 1380 pounds for 1/2-inch diameter, 2540 pounds for 3/4-inch diameter, and a minimum allowable shear load of 2080 pounds for 1/2-inch diameter, 4280 pounds for 3/4-inch diameter anchors. The allowable loads shall not be greater than the anchors ultimate load capacity divided by a factor of safety of 4.

2.1.5 Nuts

Shall conform to ASTM A 563 Grade A and shall be a square hex Type meeting ANSI B 18.2.2; all nuts shall be galvanized in accordance with ASTM A 153.

2.1.6 Washers

Shall be plain, round, hardened, and galvanized.

2.1.7 Ladders

Ladders for all structures shall be constructed of galvanized structural metal as detailed on the drawings. A pre-manufactured ladder of greater or equal quality may be used with prior approval of Contracting Officer.

2.1.8 Paints

Shall conform to the following specifications:

2.1.8.1 Coal-tar Paints for Cast-iron Flap Gates

The paint shall conform to Specification SSPC Paint 16.

2.1.8.2 Paint Certification

The Contractor shall furnish certification from the manufacturer of the paint that each type used conforms completely to the requirements of the applicable specifications.

2.1.9 Precast Concrete Pipe

Shall conform to ASTM C 76 and AASHTO M 170, class as shown on the drawings, Wall B minimum, with concrete joints and rubber gaskets. The pipe joints and rubber gaskets shall conform to ASTM C 361. The rubber gasket shall be the Confined "O" Ring Type. Performance requirements for pipe joints shall be in accordance with ASTM C 443. Holes through the pipe, such as those used for handling, will not be permitted.

2.1.10 Timber for Piling and Stringers

Timber piling and stringers shall be Douglas fir (Inland Region), yellow pine, eastern spruce, west coast hemlock, larch, or cypress, standard or common structural grade, rough sawn treated with preservatives. Timber piling shall conform to AASHTO M 168.

2.1.10.1 Preservative Treatment

Preservative treatment of timber piling shall be in accordance with the applicable requirements of AWPA C3. All stringers shall be treated in accordance with AWPA C2 with waterborne preservatives listed in AWPA P5 to a retention level of 0.25 pcf intended for above ground use and 0.40 pcf intended for ground contact and fresh water use. Exposed areas of treated woods that are cut or drilled after treatment shall receive a field treatment in accordance with AWPA M4.

2.1.11 Metal Couplers for RCP

The couplers used to join reinforced concrete pipe sections as shown on the drawings, shall be as recommended and supplied by the pipe manufacturer.

PART 3 EXECUTION

3.1 STEEL AND METAL ASSEMBLIES

All structural metal and allied metal assemblies shall be provided in accordance with the dimensions, lines and grades shown on the drawings. All connecting elements as welds, bolted connections and other joints shall be secure and permanent. All steel assemblies shall be galvanized after fabrication unless noted otherwise.

3.1.1 Ladders

Ladders shall be installed as detailed on the drawings.

3.1.2 Welding

Welding, unless otherwise specified, structural steel shall conform to the provisions of the current AWS Standard Code D1.1. For aluminum, the welding shall conform to the provisions of the current AWS Standard Code AWS D1.2 Welders who have been certified within two years of date the contract is signed will be required to pass successfully the qualification test as prescribed by the American Welding Society (Tentative Standard

Qualification Procedure). The Contractor shall certify by name to the Contracting Officer the welding operators so qualified. The Contractor shall require any welder to repeat the qualifying tests when, in the opinion of the Contracting Officer, the work of the welder indicates a reasonable doubt of his ability. In such cases the weld shall be recertified as above if he successfully passes the re-test; otherwise he shall be disqualified until he has successfully passed a re-test. All expenses in connection with the qualification and requalification shall be borne by the Contractor.

3.1.3 Galvanizing

Galvanizing shall be in accordance with ASTM A 123. Galvanizing shall be applied after fabrication.

3.1.3.1 Regalvanizing

Major damage to galvanizing on items furnished by the Contractor under this contract as a result of moving, handling and installation shall be repaired by and at the expense of the Contractor. Major damage shall be considered to be crushed or chipped-off zinc coating, and worn spots caused by abrasion which exceeds 1 square inch in area shall be regalvanized in the shop or factory by removing the zinc coating of the damaged area, acid stripped and the base metal prepared prior to regalvanizing.

3.1.3.2 Field Repair

Slight damage to galvanizing on items furnished by the Contractor under this contract as a result of construction operations shall be repaired by and at the expense of the Contractor. Slight damage shall be considered to be crushed or chipped-off zinc coating and worn spots caused by abrasion on small localized areas not exceeding 1 square inch in area. Damaged areas shall be carefully cleaned and touched up with two coats of SSPC Paint 20, Type II, or other approved zinc-rich paint.

3.1.3.3 Field or Shop Repair Option

Galvanizing damaged during shop or field fabrication by welding or cutting and unable to be regalvanized shall be shop or field painted (at the Contractor's option and expense) with two coats of galvanizing repair paint or two coats of zinc dust primer as specified herein.

3.2 EXCAVATION AND BACKFILL OF STORM DRAIN STRUCTURES

Excavation and backfill for reinforced concrete pipe shall conform to the requirements of Section 02630 STORM-DRAINAGE SYSTEM. Excavation and backfill for other structures shall conform to the requirements of Section 02315 EXCAVATION, FILLING AND BACKFILLING FOR STRUCTURES.

3.3 INSTALLATION OF PIPE

3.3.1 Shaped Bedding

Except where concrete cradle is shown on the drawings, the pipes shall be installed on firm existing ground prior to placing embankment unless otherwise permitted. After the pipe trench has been excavated to permit placement of pipe to the lines and grades shown on the drawings, the bottom shall be shaped to provide a bedding surface, firm but slightly yielding and of uniform density throughout the entire length of the trench. The

bedding surface shall be shaped to fit the bottom of the pipe so that the bottom arc is subtended by a chord equal to 60% of the diameter of the pipe. If necessary, adjustment in grade will be made during installation as directed by the Contracting Officer.

3.3.2 Placing of Precast Concrete Pipe

Pipe and accessories shall be handled in such manner as to insure delivery to the trench in sound, undamaged condition. Rubber gaskets that are not to be installed immediately shall be stored in a cool dark place and out of the direct rays of the sun. Pipe and accessories shall be carefully lowered into the trench by means of a derrick, ropes, belt slings, or other suitable equipment. Under no circumstances shall any of the piping materials be dropped or dumped into the trench. Pipe shall be laid to the lines and grades indicated on the drawings. Maximum allowable deflection from a straight line or grade will be 5 degrees unless otherwise recommended by the manufacturer. Except as authorized by the Contracting Officer, pipe shall be laid with the spigot pointing in the direction of flow. The full length of each pipe shall rest solidly upon the pipe bed, with recesses excavated to accommodate bells and joints. Pipe that has the grade or joint disturbed after laying shall be taken up and relaid. Pipe shall not be laid in water or when trench conditions are unsuitable for the work. Before laying pipe, the outside surface of the spigot and the inside surface of the bell shall be cleaned and an acceptable vegetable-compound lubricant applied to the inside surface of the bell and to the rubber gasket. After the pipe has been forced together, the position of the gasket shall be checked with a feeler gage.

3.3.3 Cradle Foundation

The foundation surface shall provide a firm foundation of uniform density throughout the entire length of the cradle. The cradle shall be carefully formed in a soil foundation that has been accurately shaped to conform to the dimensions shown on the drawings. Any overexcavation shall be filled with concrete at no additional cost to the Government.

3.3.3.1 Constructing Concrete Cradle

The concrete cradle shall be placed after conduit has been accurately set to line and grade. The concrete shall be thoroughly vibrated to ensure that there are no voids between cradle and conduit.

3.3.4 Gaskets and Jointing Materials

Gaskets and Jointing Materials shall be installed in accordance with the recommendation of the particular manufacturer in regard to the use of lubricants, cements, adhesives, and other special installation requirements. Surfaces to receive lubricants, cements, or adhesives shall be clean and dry. Gaskets and jointing materials shall be affixed to the pipe not more than 24 hours prior to the installation of the pipe, and shall be protected from the sun, blowing dust, and other deleterious agents at all times. Gaskets and jointing materials shall be inspected before installation of the pipe, and any loose or improperly affixed gaskets and jointing materials shall be removed and replaced. The pipe shall be aligned with the previously installed pipe and the joint pulled together. If, while making the joint, the gasket or jointing material becomes loose and can be seen through the exterior joint recess when the joint is pulled up to within 1 inch of closure, the pipe shall be removed and the joint remade. After the pipe has been installed and before the concrete cradle

or any backfill had been placed, the exposed outside pipe joint shall be filled with grout. The interior joint shall be filled with cement-mortar after pipe installations if required. The interior joint shall ideally show a 1/4-inch gap, and in no case shall the gap be over 1/2-inch.

3.4 SLUICE GATES

3.4.1 General

The Contractor shall furnish and install 96 inch high and 96 inch wide rectangular flush bottom disc sluice gate with resilient seal mounted along the bottom of the gate and the floor stand as indicated on the drawing complete with all necessary appurtenances. The Contractor shall furnish and install a wall thimble for the sluice gate. The gate shall be capable of withstanding a minimum unseating head of 25 feet and a seating head of 50 feet. The size of opening shall be the dimensions required. Floor stands shall be of the heavy duty type, capable of opening and closing the gate under the operating head of 20 feet. All component parts shall be so proportioned that they will withstand, without distortion or damage, the full stress to which they may be subjected during erection or service. The gate, lift, and accessories shall be the product of one manufacturer regularly engaged in the manufacturing of similar units. The gate and all appurtenances shall meet the requirements of AWWA C 501 or as modified per these specifications.

3.4.2 Frames

Frames except as noted, shall be cast iron and shall be cast in one piece. All contact surfaces of the frame shall be machined. Bronze seat facing shall be furnished for the gate and shall be firmly secured in finished grooves in the frame in such a way as to ensure that they will remain in place, free from distortion and loosening during the life of the sluice gate. Bronze seat facing shall be machined and ground or scraped to a watertight joint with the gate leaf facing.

3.4.3 Wall Thimble

A Wall Thimble shall be furnished for the gate and shall be cast iron with front flange machined smooth for mounting the gate frame. Stud holes shall be drilled and tapped to match the mounting holes of the gate frame. Thimble shall have an "F" type cross section.

3.4.4 Gate Guides

Gate guides shall be cast iron and of sufficient length that not less than one-half of the gate leaf is within the guides when the gate is fully opened. The guides shall be machined to fit the frames and shall be bolted to it or secured by anchor bolts or cast integrally with it. Fully adjustable bronze wedge facings, machined on all bearing surfaces, shall be attached to the frame assembly at the points of contact and shall make accurate contact with the wedges of the gate leaf.

3.4.5 Gate Leaf

The gate leaf, except as noted, shall be of cast iron, consisting of a flat plate reinforced with horizontal and vertical ribs to transmit the load uniformly onto the bearing surfaces. The gate leaf shall have a heavily reinforced cast bracket or pocket for receiving the stem nut. Bronze seat facings where required shall be accurately machined to ensure a close fit

for the full length of the leaf.

3.4.6 Stems, Couplings and Stem Guides

The gates shall be provided with stainless steel rising stem of sufficient diameter to withstand without buckling the thrust due to closing the gate. The stem shall be attached to the gate leaf by a bronze or stainless steel thrust nut, threaded and secured by key to the stem, and fixed in the leaf to prevent turning. The shop drawings shall show in detail the exact arrangement of the thrust nut and key. Stem sections shall be joined together by high tensile strength bronze couplings with machine cut threads. Stem guides shall be fabricated from steel conforming to ASTM A 36 and shall be furnished as required. Stem guides shall be fully adjustable in two directions and shall be provided with bronze bushings.

3.4.7 Materials

Sluice gate anodes, components, and parts shall be as specified herein. Anchor bolts, adjusting bolts, studs, nuts, and cap screws on the gate and frame shall conform to the requirements specified for stainless steel.

3.4.8 Floor Stand and Gear Box

Floor stand for the sluice gate shall be of the rising stem, double speed, geared, hand-crank type. It shall be equipped with ball or roller type thrust bearings above and below the operating nut to take both upward and downward thrust. The operating nut shall be of bronze, with acme threads, driven by steel bevel gears or a combination of spur and bevel gears with machine-cut teeth. The gear ratio shall be a minimum of 4:1. The maximum pull on the crank or handwheel shall not exceed 40 lbs. for operation of the gate. With 16 turns per minute of the crank or handwheel, the rate of closing or opening the gate shall be not less than 1 inch per minute. The floor stand and gear box shall be capable of operating with only minor maintenance (lubrication, external cleaning, etc.) after being immersed in water. The top of the rising stem shall be fitted with a threaded stop nut, capable of being fixed in the adjusted position, to prevent downward overtravel of the stem. The stem shall also be provided with an adjustable collar which, by contact with the body of the hoist or concrete slab, will prevent upward overtravel of the stem. All working parts shall be fully enclosed and arranged for complete lubrication. The floor stand shall be equipped with a substantial vandalproof, dirtproof stem cover and a position indicator which will accurately indicate the position of the gate leaf. Where counter type position indicators are furnished, "open" and "closed" readings shall be stamped on a brass plate that shall be permanently fastened to the floor stand. Markers shall be provided to indicate the direction of rotation of the crank or handwheel for opening or closing the gate. Hand crank or handwheel shall be readily removable when the gate is not in operation. A locking cap or device to be in place when the hand crank or handwheel is removed shall be provided by the Contractor. A padlock shall provide positive locking of the device such that the hoist stub shaft cannot be operated by unauthorized persons.

3.4.9 Installation

The thimble cast in the concrete shall be accurately and securely set true to alignment and plumb prior to placing the concrete. Wall thimbles shall be internally braced during concrete placement. Any tightening of stud bolts shall be carried out with the leaf lightly wedged in the frame, in order to prevent springing of the frame. Floor stand and stem guides shall

be set so that the stem slides smoothly in true alignment. The stand shall be firmly anchored and grouted as necessary with a nonshrink mixture. All wedges on the gate shall be adjusted to approximately the same tension. Adequate supply of bolts and nuts shall be provided to assure secure anchorage of the frame and stand to the basic structure and required connections. A mastic type gasket shall be provided between the frame and wall thimble.

3.4.10 Sluice Gates Anodes

The Contractor shall install four 7.5 pound magnesium marine anodes to the sluice gate. The anodes shall be a marine type anode made of cast magnesium and plastisol coated. The anodes shall be square or rectangular, weigh 7.5 pounds, and have a 3/4-inch diameter schedule 40 galvanized pipe core cast into the anode. Prior to mounting the anodes on the gate, the plastisol coating on the surface of the anodes shall be cut away, to expose the magnesium. Also, plastisol on the embedded pipe in the anode shall be removed as necessary to provide good metal-to-metal contact between the gate, the bolt and the anode. The anodes shall conform to the following composition limits:

Aluminum	- 5.3 to 6.7%
Manganese	- 0.15% Min.
Silicon	- 0.10% Max.
Nickel	- 0.002% Max.
Zinc	- 2.5 to 3.5%
Copper	- 0.02% Max.
Iron	- 0.003% Max.
Other Impurities	- 0.30% Max.
Magnesium	- Remainder

The anodes shall be manufactured by a company regularly engaged in the manufacturer of this type of product.

3.5 AUTOMATIC, EXTERNAL TYPE FLAP GATES AND FRAMES

3.5.1 General

An automatic flap size of the shown on the drawings shall be placed accurately to the lines and grades required. The Contractor design and installation of the gate shall be such that the flap cannot be opened to the extent that it will not close by its own weight and such that the flap cannot become lodged in the opening of the frame. All contact surfaces between the flap and frame shall be such as to seat tightly and insure close fit with a minimum of leakage. The gate shall be designed to adequately withstand a seating head of 25 feet. Flap gages mounted on concrete may have spigot-back or flat-back type frames. Frames shall be connected to the anchor bolts as shown on the drawings. Anchor bolts shall be accurately and securely set true to alignment and plumb prior to placing the concrete. Contractor has option to use expansion anchors in lieu of the anchor bolts. Gates shall be round type. Regardless of camber, flap gates shall hang to close at times, either through an adjustment of the hanger fastening at the top connection with the gate frame, or the stub end shall be set at zero or flat grade. Round flap gates may be cast iron or structural stainless steel at the Contractor's option.

3.5.2 Cast-Iron Flap Gates

The flap gate leaf and frame shall be cast iron with ribbed reinforcing as

necessary. Hinge link bars shall be structural steel. Cast-iron flap gates shall be painted after fabrication and before assembly as specified herein.

3.5.3 Structural Stainless Steel Flap-Gates

The flap gate leaf shall be stainless steel conforming to ASTM A 276, reinforced as necessary with stainless steel shapes of either angle or channel. Stainless steel flap gates shall be set to tolerance by a factory representative. Bending of the hinge assembly will not be permitted.

3.5.4 Connecting Bolts, Anchor Bolts and Hinge Pins

All Connecting Bolts, Anchor Bolts and Hinge Pins shall be stainless steel.

3.5.5 Side-hinged Gates

Side-hinged Gates will not be permitted.

3.5.6 Angle-hinged and Top-hinged Round Flap Gates

Angle-hinged and Top-hinged Round Flap Gates are permissible.

3.5.7 Tolerances

The gate shall be so constructed that when in a seated position without pressure the seating tolerance between the frame and the gate leaf shall not exceed 0.05 inch.

3.6 INSTALLATION OF STEEL HANDRAILS

Installation shall be in pipe sleeves embedded in concrete and filled with non-shrink grout with anchorage covered with standard pipe collar pinned to post.

3.7 TIMBER PILING

Timber piling at outlet structure shall be constructed as shown on the drawings and specified herein.

3.7.1 Piles

Piles shall be treated and shall be cut from sound, live trees, except that fire killed, blight killed, or wind felled timber may be used if not attacked by decay or insects. They shall be free from decay, loose knots, black or decayed knots, wind shakes, splits, worm holes, peckiness, or other defects, of such a character and to such a degree as would impair their strength or durability or otherwise render them unfit for the purposes for which they are to be used.

3.7.1.1 Pile Preparation and Acceptance

The diameter of the pile in cases where it is not exactly round shall be determined by measuring the circumference and dividing the number of inches by 3.14. The diameter shall be not less than 12 inches at the butt. Each pile shall have even and gradual taper from end to end and shall be generally straight. Piles crooked in more than one plane will not be accepted. All piles shall be stripped free from bark; the limb growth

shall be cut off close and smooth; and the butt shall be sawed smooth and square with the centerline of the pile. The tip of each pile to be driven shall be sharpened to a point 3 inches in diameter of 3 inches square, and the length of scarf shall be about one and one-half times the diameter of the pile before pointing. When the butt of the pile is trimmed by the Contractor in order to place it under the hammer, a scarf with an even gradual taper shall be made to firmly seat the hammer on the pile.

3.7.1.2 Stringers

Stringers shall be square cut full dimension, rough lumber.

3.7.2 Placing

Piles shall be driven as accurately as practicable in the correct locations, true to line both laterally and longitudinally and to the vertical lines, all as indicated on the drawings. A lateral deviation from the correct location at the cutoff elevation of not more than 1 inch will be permitted. A variation in slope of not more than 1/4-inch per foot of longitudinal axis will be permitted. The correct relative position of piles shall be maintained by the use templates or by other approved means. Any pile driven out of correct location or damaged shall be pulled and redriven or replaced by the Contractor at no additional cost to the Government. Jetting of pile will be permitted as approved.

3.7.3 Driving

Piles shall be driven by an approved steam hammer or air hammer or other means as approved of a size and type suitable for the work. The weight of the moving parts of the hammer shall be at least 1/3 the weight of the pile to be driven. The hammer shall be operated at all times at the steam or air pressure ad at the speed recommended by the manufacturer. Piles shall be protected during driving by a cushion and cap of approved design. Pile drivers shall have firmly supported leads extending to the lowest point the hammer must reach to drive the piles to cutoff elevation without use of a follower. A pile shall not be driven until it is approved for driving. Each pile shall be driven continuously and without voluntary interruption until the required depth of penetration has been attained. Deviation from this procedure will be permitted only in case the driving is stopped by causes which could not reasonably have been anticipated. The jetting equipment shall be of a type and capacity approved by the Contracting Officer.

3.8 PAINTING

3.8.1 Floor Stands, Gear Boxes and Stem Covers

Floor Stands, Gear Boxes and Stem Covers shall be painted with one coat of aluminum paint as specified herein. All surfaces shall be cleaned and painted with one prime coat of red iron oxide primer and two finish coats of phenolic aluminum paint, or at the Contractor's option, shall be painted with one prime coat and one finish coat of zinc primer.

3.8.2 Flap Gates

All cast-iron gates and frames shall be painted three coats of coal-tar (black) paint in accordance with SSPC Paint 16 as specified herein. A special primer shall be applied as an additional coat under the coat-tar base paint if/as recommended by the paint manufacturer. The paint shall be

heavily applied by brush or spray at a cover rate of approximately 80 square feet per gallon to give a total dry film thickness of at least 20 mils for the completed system. The paint shall not be thinned unless recommended by the paint manufacturer. If brushed, the strokes shall be at right angles to those of the preceding coat. Application and drying time between coats shall be as recommended by the paint manufacturer. Paint shall be shop applied by the manufacturer of the gates. Following installation, all surfaces specified to have received coal-tar paint coverage, which have been damaged shall be given three coats of paint as specified for original painting.

3.8.3 Preparation of Surfaces

Regardless of the paint system used, surfaces to be painted shall be clean and in accordance with SSPC SP 1 and dry before applying paint. Grease, dirt and other soiling substances shall be removed from surfaces to be painted by means of emulsions, steam solvents or others approved means. Rust and loose mill scale shall be removed by high speed power brushing, scraping, chipping, disc-sanding or other approved means. Welds and adjacent surfaces to the extent affected by welding shall be given special treatment by scraping, chipping and wire brushing to insure that flux, slag, and weld spatter are removed. Following mechanical cleaning, the weld and adjacent surfaces shall be treated in accordance with SSPC Paint 27. The diluted material shall be applied by brush or sponge and allowed to remain one-half minute or longer, followed by thorough wiping with clean wet rags.

3.8.4 Touch-up Painting

Following installation, all surfaces which have been damaged shall be prepared and repainted to provide a finished coating equivalent to the original coating.

3.9 TESTING

3.9.1 Hydrostatic Tests for Concrete Pipe Under Levees or Floodwalls or Extending Into the Channel

3.9.1.1 Shop Testing Concrete Pipe

The full length of concrete pipe and joints under levees or floodwalls or extending into the channel shall be tested for leakage as follows: A hydrostatic test shall be made on the watertight joint types proposed. Only one sample joint of each type needs shop testing; however, if the sample joint fails because of faulty workmanship, an additional sample joint may be tested. During the test period the joint shall be protected from high temperatures that might soften or adversely affect the jointing materials. The possibility that some water may be absorbed by concrete pipes during this test will be considered before rejecting any rubber seals proposed. Performance requirements for joints in reinforced concrete pipe shall conform to ASTM C 443, except that tests shall be performed at an internal hydrostatic pressure of 10 psi minimum for a 20-minute period.

3.9.1.2 Field Joint Tests

Hydrostatic pressure tests on all concrete pipe joints under levees or floodwalls or extending into the channel shall be made by the Contractor after the pipe has been installed but prior to placing any backfill except that required for bedding the pipe. Testing of joints shall be made by use

of a water filled pipe test or a Contractor-furnished Joint Tester approved by the Contracting Officer. Water filled pipe test method shall not be used for pipe diameters greater than 24 inches. Joints shall be required to withstand an internal hydrostatic pressure of 10 psi minimum without visible leakage for 20 minutes. After backfilling the pipe, the Contracting Officer may require additional hydrostatic tests of any joints which by inspection do not appear to be watertight.

a. Water Filled Pipe Test

Filling shall be accomplished so that all air is expelled from the pipe during the test. The Pipe shall be maintained at this pressure for a period of not less than 20 minutes, or such additional time as may be required for a complete inspection . The possibility that some water may be absorbed by the concrete pipes during this test will be taken into consideration before rejection of any rubber seals proposed. Water shall be added as necessary to maintain the pipe completely full under the specified head. The Contractor shall develop a procedure and be responsible for holding the pipe securely together during the test. The procedure shall be submitted to the Contracting Officer for approval.

b. Joint Tester

Furnish joint testing unit capable of testing pipe joints of all size pipes required to be testedto 10 psi. The unit shall be a large Diameter Joint Tester acceptable to the Contracting Officer. The unit shall consist of a control panel and necessary pump, gages, valves, and hoses. Use water as a testing fluid. The Contractor shall have the gages calibrated, at no cost to the Government, by an independent testing laboratory approved by Contracting Officer. The results shall be submitted to Contracting Officer for approval prior to commencing tests. Test at the 10 psi for 20 minute duration. The allowable pressure drop shall be determined by averaging the results of three 20-minute tests conducted at the required 10 psi on a straight, nonjointed section of pipe. The Contractor shall obtain approval from the Contracting Officer for the allowable pressure drop calculation. Records of joint testing shall be furnished to the Contracting Officer. Mark any joint which does not maintain the required pressure for the 20 minute duration. Required joint pressure equals Test pressure minus allowable Pressure Drop. Joints that fail to maintain pressure shall be disassembled and all inferior elements replaced. Joint shall be retested and corrections made as necessary to meet the above pressure test. All work shall be approved by the Contracting Officer.

3.9.1.3 Defects or Visible Leakage from Joints or Pipe

The subgrade shall be inspected at the end of joint testing to determine if the portion of the joints in contact with the ground has leaked. Defects or visible leakage from joints or pipe shall be corrected. Defective pipe or joints disclosed in the hydrostatic test shall be replaced and the test repeated until the results are satisfactory to the Contracting Officer.

3.9.2 Tests for Acceptance of Materials

Tests for acceptance of materials shall be made by the Contractor in accordance with the Contract Clause titled: Inspection of Construction. In lieu of actual acceptance tests on materials, the Contractor may be required to furnish (3) certified copies of certificates of compliance with the specifications.

3.9.3 Tests for Sluice Gate

Shop tests of gate and equipment will be required. The gate shall be completely assembled in the shop and checked to ensure that all parts fit accurately together. Closure of gate leaf against the gate frame fit and interchangeability of parts shall be specifically and accurately checked. After installation, the gate assembly shall be tested in the presence of the Contracting Officer.

-- End of Section --

SECTION TABLE OF CONTENTS

DIVISION 02 - SITE WORK

SECTION 02315

EXCAVATION, FILLING AND BACKFILLING FOR STRUCTURES

08/98

PART 1 GENERAL

1.1 REFERENCES
1.2 DEGREE OF COMPACTION
1.3 SUBMITTALS

PART 2 PRODUCTS

2.1 MATERIALS
2.1.1 Satisfactory Materials
2.1.2 Unsatisfactory Materials
2.1.3 Cohesionless and Cohesive Materials
2.1.4 Expansive Soils
2.1.5 Compacted Random Backfill

PART 3 EXECUTION

3.1 CLEARING AND GRUBBING
3.2 TOPSOIL
3.3 EXCAVATION
3.4 DRAINAGE AND DEWATERING
3.4.1 Drainage
3.4.2 Excavation Dewatering
3.5 EXCAVATION SUPPORT
3.6 CLASSIFICATION OF EXCAVATION
3.7 BLASTING
3.8 BORROW
3.9 MOVEMENT AND PLACEMENT OF EXCAVATED MATERIALS
3.9.1 Haul routes
3.10 FINAL GRADE OF SURFACES TO SUPPORT CONCRETE
3.11 SUBGRADE PREPARATION
3.12 FILLING AND BACKFILLING
3.13 FIELD TESTING CONTROL
3.13.1 In-Place Density of Fills and Backfills
3.13.2 Moisture Content
3.13.3 Optimum Moisture and Laboratory Maximum Density
3.14 GRADING
3.15 SPREADING TOPSOIL
3.16 PROTECTION
3.17 SLIDES

-- End of Section Table of Contents --

SECTION 02315

EXCAVATION, FILLING AND BACKFILLING FOR STRUCTURES
08/98

PART 1 GENERAL

1.1 REFERENCES

The publications listed below form a part of this specification to the extent referenced. The publications are referred to in the text by basic designation only.

AMERICAN SOCIETY FOR TESTING AND MATERIALS (ASTM)

ASTM D 422	(1963; R 1990) Particle-Size Analysis of Soils
ASTM D 698	(2000) Standard Test Methods for Laboratory Compaction Characteristics of Soil Using Standard Effort (12,400 ft-lbf/ft3)
ASTM D 1556	(1990; R 1996el) Density and Unit Weight of Soil in Place by the Sand-Cone Method
ASTM D 2167	(1994) Density and Unit Weight of Soil in Place by the Rubber Balloon Method
ASTM D 2216	(1998) Laboratory Determination of Water (Moisture) Content of Soil and Rock
ASTM D 2487	(1998) Classification of Soils for Engineering Purposes (Unified Soil Classification System)
ASTM D 2922	(1996el) Density of Soil and Soil-Aggregate in Place by Nuclear Methods (Shallow Depth)
ASTM D 2937	(1994) Density of Soil in Place by the Drive-Cylinder Method
ASTM D 3017	(1988; R 1996el) Water Content of Soil and Rock in Place by Nuclear Methods (Shallow Depth)
ASTM D 4318	(1998) Liquid Limit, Plastic Limit, and Plasticity Index of Soils

1.2 DEGREE OF COMPACTION

Degree of compaction is expressed as a percentage of the maximum density

obtained by the test procedure presented in ASTM D 698, abbreviated as percent laboratory maximum density.

1.3 SUBMITTALS

Government approval is required for submittals with a "G" designation; submittals not having a "G" designation are for information only. When used, a designation following the "G" designation identifies the office that will review the submittal for the Government. The following shall be submitted in accordance with Section 01330 SUBMITTAL PROCEDURES:

SD-06 Test Reports

Optimum Moisture and Laboratory Maximum Density G-RE

In-Place Densities of Fills and Backfills G-RE

Field Testing Control; G-RE

Copies of all laboratory and field test reports within 24 hours of the completion of the test.

SD-07 Certificates

Disposal Facility; G-RE

Location of disposal facility and appropriate documentation.

Qualifications of the commercial testing laboratory that will perform all testing in accordance with paragraph FIELD TESTING CONTROL.

PART 2 PRODUCTS

2.1 MATERIALS

2.1.1 Satisfactory Materials

Satisfactory materials include materials classified by ASTM D 2487 as GW, GP, GM, GP-GM, GW-GM, GC, GP-GC, GM-GC, SW, SP, SM, SW-SM, SC, SW-SC, SP-SM, SP-SC, CL, ML, CL-ML, . Satisfactory materials shall be free of trash, debris, concrete rubble, roots or other organic matter, frozen material, or stones larger than 3 inches in any dimension, fine grained sedimentary rocks (i.e., shale, claystone, siltstone, mudstone, and marl) even though they may be intensely weathered, contamination from hazardous, toxic, biological or radiological substances, or other materials that are determined by the Contracting Officer as unsatisfactory for providing a stable subgrade or stable foundation for structures. Otherwise satisfactory material which has excess moisture content shall not be classified as unsatisfactory material unless it cannot be dried by manipulation, aeration, or blending with other materials as determined by the Contracting Officer.

2.1.2 Unsatisfactory Materials

Unsatisfactory materials include materials classified in ASTM D 2487 as MH, Pt, OH, OL, and any other materials which do not comply with the requirements for satisfactory materials. Unsatisfactory materials also

include man-made fills, trash, refuse, or backfills from previous construction. Unsatisfactory material also includes material classified as satisfactory which contains root and other organic matter, frozen material, and stones larger than 3 inches. The Contracting Officer shall be notified of any contaminated materials.

2.1.3 Cohesionless and Cohesive Materials

Cohesionless materials include materials classified in ASTM D 2487 as GW, GP, SW, and SP. Cohesive materials include materials classified as GC, SC, ML, CL, MH, and CH. Materials classified as GM, GP-GM, GW-GM, SW-SM, SP-SM, and SM shall be identified as cohesionless only when the fines are nonplastic.

2.1.4 Expansive Soils

Expansive soils are defined as soils that have a plasticity index equal to or greater than 24 and a liquid limit greater than 49 when tested in accordance with ASTM D 4318.

2.1.5 Compacted Random Backfill

Material for compacted random backfill shall consist of any or all types of satisfactory compacted cohesive or cohesionless material as specified above. The random backfill shall be suitable from the standpoint of compacted stability for its use as backfill. This material shall be selectively excavated from within the excavations and grading limits and stockpiled, if necessary, in areas approved by the Contracting Officer.

PART 3 EXECUTION

3.1 CLEARING AND GRUBBING

The areas within lines 5 feet outside of each structure line shall be cleared and grubbed of trees, stumps, roots, brush and other vegetation, debris, existing foundations, pavements, utility lines, structures, fences, and other items that would interfere with construction operations. Stumps, logs, roots, and other organic matter shall be completely removed and the resulting depressions shall be filled with satisfactory material, placed and compacted in accordance with paragraph FILLING AND BACKFILLING. Materials removed shall be disposed of outside the limits of Government-controlled property at the Contractor's responsibility.

3.2 TOPSOIL

Topsoil shall be stripped below existing grade within the designated excavations and grading lines and deposited in storage piles for later use. Excess topsoil shall be disposed as specified for excess excavated material.

3.3 EXCAVATION

Excavation shall conform to the dimensions and elevations indicated for each structure and footing except as specified, and shall include trenching for utility systems to a point 5 feet beyond the line of each structure, and all work incidental thereof. All excavations shall be conducted in the dry. Excavation shall extend a sufficient distance from walls and footings to allow for placing and removal of forms. Excavations below indicated depths will not be permitted except to remove unsatisfactory material. Unsatisfactory material encountered below the grades shown shall be removed

as directed and replaced with satisfactory material; and payment will be made in conformance with the CHANGES clause of the CONTRACT CLAUSES. Satisfactory material removed below the depths indicated, without specific direction of the Contracting Officer, shall be replaced, at no additional cost to the Government, with satisfactory materials to the indicated excavation grade; except that concrete footings shall be increased in thickness to the bottom of the overdepth excavations. Satisfactory material shall be placed and compacted as specified in paragraph FILLING AND BACKFILLING. Determination of elevations and measurements of approved overdepth excavation of unsatisfactory material below grades indicated shall be done under the direction of the Contracting Officer.

3.4 DRAINAGE AND DEWATERING

3.4.1 Drainage

Surface water shall be directed away from excavation and construction sites to prevent erosion and undermining of foundations. Diversion ditches, dikes and grading shall be provided and maintained as necessary during construction. Excavated slopes and backfill surfaces shall be protected to prevent erosion and sloughing. Excavation shall be performed so that the site, the area immediately surrounding the site, and the area affecting operations at the site shall be continually and effectively drained.

3.4.2 Excavation Dewatering

Groundwater flowing toward or into excavations shall be controlled to prevent sloughing of excavation slopes and walls, boils, uplift and heave in the excavation and to eliminate interference with orderly progress of construction. The Contractor shall construct and maintain all necessary diversion channels, flumes, and/or temporary diversion and protective works necessary to protect excavation areas, shall furnish all material required therefore, and shall furnish install, maintain, and operate all sumps, pumping, and other equipment for dewatering and for maintaining the required excavation areas. French drains, sumps, ditches or trenches will not be permitted within 3 feet of the foundation of any structure, except with specific written approval, and after specific contractual provisions for restoration of the foundation area have been made. Control measures shall be taken by the time the excavation reaches the water level in order to maintain the integrity of the in situ material. While the excavation is open, the water level shall be maintained continuously, at least 2 feet below the working level. All excavation dewatering operations shall not impose adverse impacts (e.g., induced settlements or displacements) on adjacent buildings and surrounding areas.

3.5 EXCAVATION SUPPORT

Excavation support, including sheet piling, shall be furnished and installed as necessary to protect workmen, banks, adjacent paving, structures, and utilities. All excavation support, shoring, bracing, and sheeting shall be removed as excavations are backfilled, in a manner to prevent caving. Excavation support installations shall comply with EM 385-1-1 U.S. Army Corps of Enginneers Safety and Health Requirements Manual.

3.6 CLASSIFICATION OF EXCAVATION

Excavation will be unclassified regardless of the nature of material encountered.

3.7 BLASTING

Blasting will not be permitted.

3.8 BORROW

Where satisfactory materials are not available in sufficient quantity from required excavations, approved materials shall be obtained from sources outside the limits of Government-controlled land, at the Contractor's expense.

3.9 MOVEMENT AND PLACEMENT OF EXCAVATED MATERIALS

Satisfactory excavated material required for fill or backfill shall be placed in the proper section of the permanent work required under this section or shall be separately stockpiled if it cannot be readily placed. Satisfactory material in excess of that required for the permanent work and all unsatisfactory material shall be disposed of in an approved disposal facility as specified in Section 02210 GRADING. Excavated material used for the permanent work requirements shall be placed as specified in paragraph FILLING AND BACKFILLING.

3.9.1 Haul routes

All loads shall be covered. The Contractor shall clean haul routes of any spilled materials by sweeping of flushing.

3.10 FINAL GRADE OF SURFACES TO SUPPORT CONCRETE

Excavation to final grade shall not be made until just before concrete is to be placed.

3.11 SUBGRADE PREPARATION

Unsatisfactory material found in surfaces to receive fill or backfills, or unsatisfactory material found in final grade surfaces in excavated areas shall be removed and replaced with satisfactory materials as directed by the Contracting Officer. The surface shall be scarified to a depth of 6 inches before the fill is started. Sloped surfaces steeper than 1 vertical to 4 horizontal shall be plowed, stepped, benched, or broken up so that the fill material will bond with the existing material. When subgrades are less than the specified density, the ground surface shall be broken up to a minimum depth of 6 inches, pulverized, and compacted to the specified density. When the subgrade is part fill and part excavation or natural ground, the excavated or natural ground portion shall be scarified to a depth of 12 inches and compacted as specified for the adjacent fill. Material shall not be placed on surfaces that are muddy, frozen, or contain frost. Compaction shall be accomplished by sheepsfoot rollers, pneumatic-tired rollers, steel-wheeled rollers, or other approved equipment well suited to the soil being compacted. Material shall be moistened or aerated as necessary to provide the moisture content that will readily facilitate obtaining the specified compaction with the equipment used. Minimum subgrade density shall be as specified in paragraph FILLING AND BACKFILLING.

3.12 FILLING AND BACKFILLING

Filling and backfilling shall be accomplished by equipment approved by the Contracting Officer that is well suited to the soil being compacted.

Satisfactory materials shall be used in bringing fills and backfills to the lines and grades indicated and for replacing unsatisfactory materials. Satisfactory materials shall be placed in horizontal layers not exceeding 8 inches in loose thickness, or 4 inches when hand-operated compactors are used. After placing, each layer shall be plowed, disked, or otherwise broken up, moistened or aerated as necessary, thoroughly mixed and compacted as specified. Backfilling shall not begin until construction below finish grade has been approved, underground utilities systems have been inspected, tested and approved, forms removed, and the excavation cleaned of trash and debris. Backfill shall be brought to indicated finish grade. Backfill shall not be placed in wet or frozen areas. Where pipe is coated or wrapped for protection against corrosion, the backfill material up to an elevation 2 feet above sewer lines and 1 foot above other utility lines shall be free from stones larger than 1 inch in any dimension. Heavy equipment for spreading and compacting backfill shall not be operated closer to foundation or retaining walls than a distance equal to the height of backfill above the top of footing; the area remaining shall be compacted in layers not more than 4 inches in compacted thickness with power-driven hand tampers suitable for the material being compacted. Backfill shall be placed carefully around pipes to avoid damage. Backfill shall not be placed against foundation or retaining walls prior to completion of the curing period specified in SECTION 03301 CAST-IN-PLACE STRUCTURAL CONCRETE. As far as practicable, backfill shall be brought up evenly on each side of the wall and sloped to drain away from the wall. Each layer of fill and backfill shall be compacted to not less than the percentage of maximum density specified below:

	Percent Laboratory maximum density (ASTM D 698)	
	Cohesive material	Cohesionless material
Fill, embankment, and backfill		
Under structures, steps, paved areas, and in trenches	95	95
Adjacent to structures, walls, and footings	90	90
Under sidewalks and grassed areas	90	90
Expansive Soils	Compacted to not less than 85 percent nor more than 90 percent	

Approved compacted subgrades, fills, or backfills that are disturbed by the Contractor's operations or adverse weather shall be scarified and compacted as specified herein before to the required density prior to further construction thereon. Recompaction over underground utilities and heating lines shall be by hand tamping.

3.13 FIELD TESTING CONTROL

Field testing control shall be the responsibility of the Contractor and

shall be performed at no additional cost to the Government. In-place density and moisture content test results shall be included with the Contractor's daily construction quality control reports. Testing shall be performed by an approved commercial testing laboratory or may be performed by the Contractor subject to approval. All testing laboratories used by the Contractor shall be validated in accordance with paragraph 3.7.2.1 Validation Check of Section 01451 CONTRACTOR QUALITY CONTROL. The Government may perform Quality Assurance (QA) Testing at any time at the discretion of the Contracting Officer.

Optimum moisture and laboratory maximum density testing is required to substantiate the suitability of earth materials proposed for use in construction. Field in-place density testing is used for quality control of earth materials placed in the permanent work areas and results of the in-place density testing shall be included in the Contractor's Daily Quality Control Reports. Field in-place density shall be determined in accordance with ASTM D 1556, ASTM D 2167, or ASTM D 2922. When ASTM D 2922 is used, the calibration curves shall be checked and adjusted if necessary by the procedure described in ASTM D 2922, paragraph ADJUSTING CALIBRATION CURVE. ASTM D 2922 results in a wet unit weight of soil and when using this method ASTM D 3017 shall be used to determine the moisture content of the soil. The calibration curves furnished with the moisture gauges shall also be checked along with density calibration checks as described in ASTM D 3017. The calibration checks of both the density and moisture gauges shall be made at the beginning of a job on each different type of material encountered and at intervals as directed by the Contracting Officer. ASTM D 2937 shall be used only for soft, fine-grained, cohesive soils. The following number of tests, if performed at the appropriate time, shall be the minimum acceptable for each type operation.

3.13.1 In-Place Density of Fills and Backfills

One density test shall be taken per 2,000 sq yds or fraction thereof of each lift for fill or backfill areas compacted by other than hand or hand-operated machines. For areas compacted with hand or hand-operated machines, one test shall be taken per 300 sq yds or fraction thereof of each lift, or one test for each 250 linear foot of long narrow fills. If ASTM D 2922 is used, in-place densities shall be checked by ASTM D 1556 as follows: One check per lift for each 750 linear feet of long narrow fills, and a minimum of 2 checks per lift for other fill and backfill areas less than 2,000 sq yds.

In-place density, ASTM D 1556, ASTM D 2167, ASTM D 2922 or ASTM D 2937
Moisture content, ASTM D 2216, ASTM D 3017
Particle gradation, ASTM D 422
Atterberg limits, ASTM D 4318

Test results shall be furnished to the Contracting Officer within 24 hours of making the test. When test results indicate that compaction is not as specified, the material shall be removed and replaced or recompacted to meet the specification requirements. Subsequent tests on recompacted areas shall be performed to determine conformance with specification requirements. Test results shall be certified by a registered professional engineer. The certification shall state that the tests were performed under the direct supervision of the engineer and that the results are representative of the materials or conditions being certified by the tests. Acceptance tests may be made by the Government for verification of compliance; however, the Contractor shall not depend on such tests for his control of operations. Deficiences in construction shall be corrected by

the Contractor at no additional cost to the Government.

3.13.2 Moisture Content

In the stockpile, excavation or borrow areas, a minimum of one test per one-half days placement per type of material or source of materials being placed is required during stable weather conditions. During unstable weather, tests shall be made as dictated by local conditions. Moisture content, tested in accordance with ASTM D 2216, shall be compared with allowable limits relative to the laboratory optimum moisture.

3.13.3 Optimum Moisture and Laboratory Maximum Density

Tests indicated below shall be made for each type of excavated material or source of material (including borrow material) to determine the optimum moisture and laboratory maximum density values. All samples taken shall be representative of the materials to be placed. Soils shall be grouped together into "types" such that all members of the same "type" have a PI that does not vary more than 2 percent plus or minus from the mean PI of the "type". A moisture/density curve shall be made for each "type" of material or source of material including borrow materials. Additional moisture/density curves shall be made at the direction of the Contracting Officer, or when any change in material "type" occurs. Included with each moisture/density curve will be a determination of the in situ moisture content determined in accordance with ASTM D 2216 and Atterberg limits determined in accordance with ASTM D 4318 for materials with 15 percent or more of the total sample passing the #200 sieve. The gradation of materials having 30 percent or more of the total sample retained on the #200 sieve shall be determined in accordance with ASTM D 422. A copy of these test results shall be submitted to the Contracting Officer for approval prior to placement of any fill or backfill.

Compaction curve, ASTM D 698
Liquid limit, ASTM D 4318
Plastic limit, ASTM D 4318
In situ moisture content, ASTM D 2216
Particle-size analysis, ASTM D 422
Soil classification, ASTM D 2487

3.14 GRADING

Areas within the grading limits shown on the drawings shall be constructed true-to-grade, shaped to drain, and shall be maintained free of trash and debris until final inspection has been completed and the work has been accepted.

3.15 SPREADING TOPSOIL

Areas from which topsoil has been removed shall be topsoiled. The surface shall be free of materials that would hinder planting or maintenance operations. The subgrade shall be pulverized to a depth of 2 inches by disking or plowing for the bonding of topsoil with the subsoil. Topsoil shall then be uniformly spread, graded, and compacted to the thickness, elevations, slopes shown, and left free of surface irregularities. Topsoil shall be compacted by one pass of a cultipacker, roller, or other approved equipment weighing 100 to 160 pounds per linear foot of roller. Topsoil shall not be placed when the subgrade is frozen, excessively wet, extremely dry, or in a condition otherwise detrimental to seeding, planting, or

proper grading.

3.16 PROTECTION

Settlement or washing that occurs in graded, topsoiled, or backfilled areas prior to acceptance of the work, shall be repaired and grades reestablished to the required elevations and slopes.

3.17 SLIDES

In the event of slides in any part of excavated slopes prior to final acceptance of the work, the Contractor shall remove material from the slide areas, as directed, and shall rebuild that portion of the slope. In case it is determined that the slide was caused by foundation failure not induced by improper construction, the repair ordered (material removed and the material placed in the slope) will be made in accordance with the clause Entitled "Changes" of the CONTRACT CLAUSE. The Contractor shall not surcharge the excavation slopes nor the area within 15 feet of the excavated slopes with material.

-- End of Section --

SECTION TABLE OF CONTENTS

DIVISION 02 - SITE WORK

SECTION 02316A

EXCAVATION, TRENCHING, AND BACKFILLING FOR UTILITIES SYSTEMS

11/97

PART 1 GENERAL

1.1 REFERENCES
1.2 DEGREE OF COMPACTION
1.3 SUBMITTALS

PART 2 PRODUCTS

2.1 MATERIALS
2.1.1 Satisfactory Materials
2.1.2 Unsatisfactory Materials
2.1.3 Cohesionless and Cohesive Materials
2.1.4 Rock
2.1.5 Unyielding Material
2.1.6 Unstable Material
2.1.7 Select Granular Material
2.1.8 Initial Backfill Material
2.2 PLASTIC MARKING TAPE

PART 3 EXECUTION

3.1 EXCAVATION
3.1.1 Trench Excavation Requirements
3.1.1.1 Bottom Preparation
3.1.1.2 Removal of Unyielding Material
3.1.1.3 Removal of Unstable Material
3.1.1.4 Excavation for Appurtenances
3.1.1.5 Jacking, Boring, and Tunneling
3.1.2 Stockpiles
3.2 BACKFILLING AND COMPACTION
3.2.1 Trench Backfill
3.2.1.1 Replacement of Unyielding Material
3.2.1.2 Replacement of Unstable Material
3.2.1.3 Bedding and Initial Backfill
3.2.1.4 Final Backfill
3.2.2 Backfill for Appurtenances
3.3 SPECIAL REQUIREMENTS
3.3.1 Water Lines
3.3.2 Plastic Marking Tape
3.4 TESTING
3.4.1 Testing Facilities
3.4.2 Testing of Backfill Materials
3.4.3 Field Density Tests
3.4.4 Displacement of Sewers

-- End of Section Table of Contents --

SECTION 02316A

EXCAVATION, TRENCHING, AND BACKFILLING FOR UTILITIES SYSTEMS
11/97

ATTACHMENT: FIG. 3-1 INCLUDED

PART 1 GENERAL

1.1 REFERENCES

The publications listed below form a part of this specification to the extent referenced. The publications are referred to in the text by basic designation only.

AMERICAN SOCIETY FOR TESTING AND MATERIALS (ASTM)

ASTM D 1556	(1990; R 1996) Density and Unit Weight of Soil in Place by the Sand-Cone Method
ASTM D 698 REV A	(2001) Standard Test Methods for Laboratory Compaction Characteristics of Soil Using Standard Effort (12,400 ft-lbf/ft3 (600 kN-m/m3))
ASTM D 2487	(1998) Classification of Soils for Engineering Purposes (Unified Soil Classification System)
ASTM D 2922	(1996) Density of Soil and Soil-Aggregate in Place by Nuclear Methods (Shallow Depth)
ASTM D 3017	(1988; R1996el) Water Content of Soil and Rock in Place by Nuclear Methods (Shallow Depth)

1.2 DEGREE OF COMPACTION

Degree of compaction shall be expressed as a percentage of the maximum density obtained by the test procedure presented in ASTM D 698 REV A.

1.3 SUBMITTALS

Government approval is required for submittals with a "G" designation; submittals not having a "G" designation are for information only. When used, a designation following the "G" designation identifies the office that will review the submittal for the Government. The following shall be submitted in accordance with Section 01330 SUBMITTAL PROCEDURES:

SD-06 Test Reports

Field Density Tests; G-RE,
Testing of Backfill Materials; G-RE,

Copies of all laboratory and field test reports within 24 hours of the completion of the test.

PART 2 PRODUCTS

2.1 MATERIALS

2.1.1 Satisfactory Materials

Satisfactory materials shall comprise any materials classified by ASTM D 2487 as GW, GP, GM, GP-GM, GW-GM, GC, GP-GC, GM-GC, SW, SP, SM, SW-SM, SP-SM, .

2.1.2 Unsatisfactory Materials

Materials which do not comply with the requirements for satisfactory materials are unsatisfactory. Unsatisfactory materials also include man-made fills, trash, refuse, or backfills from previous construction. Unsatisfactory material also includes material classified as satisfactory which contains root and other organic matter, frozen material, and stones larger than 6 inches. The Contracting Officer shall be notified of any contaminated materials.

2.1.3 Cohesionless and Cohesive Materials

Cohesionless materials shall include materials classified in ASTM D 2487 as GW, GP, SW, and SP. Cohesive materials shall include materials classified as GC, SC, ML, CL, MH, and CH. Materials classified as GM and SM shall be identified as cohesionless only when the fines are nonplastic.

2.1.4 Rock

Rock shall consist of boulders measuring 1/2 cubic yard or more and materials that cannot be removed without systematic drilling and blasting such as rock material in ledges, bedded deposits, unstratified masses and conglomerate deposits, and below ground concrete or masonry structures, exceeding 1/2 cubic yard in volume, except that pavements shall not be considered as rock.

2.1.5 Unyielding Material

Unyielding material shall consist of rock and gravelly soils with stones greater than 6 inches in any dimension or as defined by the pipe manufacturer, whichever is smaller.

2.1.6 Unstable Material

Unstable material shall consist of materials too wet to properly support the utility pipe, conduit, or appurtenant structure.

2.1.7 Select Granular Material

Select granular material shall consist of well-graded sand, gravel, crushed gravel, crushed stone or crushed slag composed of hard, tough and durable particles, and shall contain not more than 10 percent by weight of material passing a No. 200 mesh sieve and no less than 100 percent by weight passing the l inch sieve. The maximum allowable aggregate size shall be 2 inches, or the maximum size recommended by the pipe manufacturer, whichever is smaller.

2.1.8 Initial Backfill Material

Initial backfill shall consist of select granular material or satisfactory materials free from rocks 2 inches or larger in any dimension or free from rocks of such size as recommended by the pipe manufacturer, whichever is smaller. When the pipe is coated or wrapped for corrosion protection, the initial backfill material shall be free of stones larger than 2 inches in any dimension or as recommended by the pipe manufacturer, whichever is smaller.

2.2 PLASTIC MARKING TAPE

Plastic marking tape shall be acid and alkali-resistant polyethylene film, 6 inches wide with minimum thickness of 0.004 inch. Tape shall have a minimum strength of 1750 psi lengthwise and 1500 psi crosswise. The tape shall be manufactured with integral wires, foil backing or other means to enable detection by a metal detector when the tape is buried up to 3 feet deep. The tape shall be of a type specifically manufactured for marking and locating underground utilities. The metallic core of the tape shall be encased in a protective jacket or provided with other means to protect it from corrosion. Tape color shall be as specified in TABLE 1 and shall bear a continuous printed inscription describing the specific utility.

TABLE 1. Tape Color

Red:	Electric
Yellow:	Gas, Oil, Dangerous Materials
Orange:	Telephone, Telegraph, Television, Police, and Fire Communications
Blue:	Water Systems
Green:	Sewer Systems

PART 3 EXECUTION

3.1 EXCAVATION

Excavation shall be performed to the lines and grades indicated. Rock excavation shall include removal and disposition of material defined as rock in paragraph MATERIALS. Earth excavation shall include removal and disposal of material not classified as rock excavation. During excavation, material satisfactory for backfilling shall be stockpiled in an orderly manner at a distance from the banks of the trench equal to 1/2 the depth of the excavation, but in no instance closer than 2 feet. Excavated material not required or not satisfactory for backfill shall be removed from the site . Grading shall be done as may be necessary to prevent surface water from flowing into the excavation, and any water accumulating shall be removed to maintain the stability of the bottom and sides of the excavation. Unauthorized overexcavation shall be backfilled in accordance with paragraph BACKFILLING AND COMPACTION at no additional cost to the Government.

3.1.1 Trench Excavation Requirements

The trench shall be excavated as recommended by the manufacturer of the pipe to be installed. Trench walls below the top of the pipe shall be sloped, or made vertical, and of such width as recommended in the manufacturer's installation manual. Where no manufacturer's installation manual is available, trench walls shall be made vertical. Trench walls more than 4 feet high shall be shored, cut back to a stable slope, or provided with equivalent means of protection for employees who may be

exposed to moving ground or cave in. Vertical trench walls more than 4 feet high shall be shored. Trench walls which are cut back shall be excavated to at least the angle of repose of the soil. Special attention shall be given to slopes which may be adversely affected by weather or moisture content. The trench width below the top of pipe shall not exceed 24 inches plus pipe outside diameter (O.D.) for pipes of less than 24 inches inside diameter (See Figure 3-1). Where recommended trench widths are exceeded, redesign, stronger pipe, or special installation procedures shall be utilized by the Contractor. The cost of redesign, stronger pipe, or special installation procedures shall be borne by the Contractor without any additional cost to the Government.

3.1.1.1 Bottom Preparation

The bottoms of trenches shall be accurately graded to provide uniform bearing and support for the bottom quadrant of each section of the pipe. Bell holes shall be excavated to the necessary size at each joint or coupling to eliminate point bearing. Stones of 2 inches or greater in any dimension, or as recommended by the pipe manufacturer, whichever is smaller, shall be removed to avoid point bearing.

3.1.1.2 Removal of Unyielding Material

Where unyielding material is encountered in the bottom of the trench, such material shall be removed 12 inches below the required grade and replaced with suitable materials as provided in paragraph BACKFILLING AND COMPACTION.

3.1.1.3 Removal of Unstable Material

Where unstable material is encountered in the bottom of the trench, such material shall be removed to the depth directed and replaced to the proper grade with select granular material as provided in paragraph BACKFILLING AND COMPACTION. When removal of unstable material is required due to the Contractor's fault or neglect in performing the work, the resulting material shall be excavated and replaced by the Contractor without additional cost to the Government.

3.1.1.4 Excavation for Appurtenances

Excavation for manholes, catch-basins, inlets, or similar structures shall be sufficient to leave at least 12 inches clear between the outer structure surfaces and the face of the excavation or support members Rock shall be cleaned of loose debris and cut to a firm surface either level, stepped, or serrated, as shown or as directed. Loose disintegrated rock and thin strata shall be removed. Removal of unstable material shall be as specified above. When concrete or masonry is to be placed in an excavated area, special care shall be taken not to disturb the bottom of the excavation. Excavation to the final grade level shall not be made until just before the concrete or masonry is to be placed.

3.1.1.5 Jacking, Boring, and Tunneling

Unless otherwise indicated, excavation shall be by open cut except that sections of a trench may be jacked, bored, or tunneled if, in the opinion of the Contracting Officer, the pipe, cable, or duct can be safely and properly installed and backfill can be properly compacted in such sections.

3.1.2 Stockpiles

Stockpiles of satisfactory shall be placed and graded as specified. Stockpiles shall be kept in a neat and well drained condition, giving due consideration to drainage at all times. The ground surface at stockpile locations shall be cleared, grubbed, and sealed by rubber-tired equipment, excavated satisfactory and unsatisfactory materials shall be separately stockpiled. Stockpiles of satisfactory materials shall be protected from contamination which may destroy the quality and fitness of the stockpiled material. If the Contractor fails to protect the stockpiles, and any material becomes unsatisfactory, such material shall be removed and replaced with satisfactory material from approved sources at no additional cost to the Government. Locations of stockpiles of satisfactory materials shall be subject to prior approval of the Contracting Officer.

3.2 BACKFILLING AND COMPACTION

Backfill material shall consist of satisfactory material, select granular material, or initial backfill material as required. Backfill shall be placed in layers not exceeding 6 inches loose thickness for compaction by hand operated machine compactors, and 8 inches loose thickness for other than hand operated machines, unless otherwise specified. Each layer shall be compacted to at least 95 percent maximum density for cohesionless soils and 95 percent maximum density for cohesive soils, unless otherwise specified.

3.2.1 Trench Backfill

Trenches shall be backfilled to the grade shown. The trench shall not be backfilled until all specified tests are performed.

3.2.1.1 Replacement of Unyielding Material

Unyielding material removed from the bottom of the trench shall be replaced with select granular material or initial backfill material.

3.2.1.2 Replacement of Unstable Material

Unstable material removed from the bottom of the trench or excavation shall be replaced with select granular material placed in layers not exceeding 6 inches loose thickness.

3.2.1.3 Bedding and Initial Backfill

Bedding shall be a granular material as accepted by the pipe manufacturer Initial backfill material shall be placed and compacted with approved tampers to a height of at least one foot above the utility pipe or conduit. The backfill shall be brought up evenly on both sides of the pipe for the full length of the pipe. Care shall be taken to ensure thorough compaction of the fill under the haunches of the pipe.

3.2.1.4 Final Backfill

The remainder of the trench, except for special materials for roadways, railroads and airfields, shall be filled with satisfactory material. Backfill material shall be placed and compacted as follows:

a. Roadways, Railroads, and Airfields: Backfill shall be placed up to the elevation at which the requirements in Section 02210 Grading control. Water flooding or jetting methods of compaction will not be permitted.

b. Sidewalks, Turfed or Seeded Areas and Miscellaneous Areas: Backfill shall be deposited in layers of a maximum of 12 inch loose thickness, and compacted to 90 percent maximum density for cohesive soils and 90 percent maximum density for cohesionless soils. Compaction by water flooding or jetting will not be permitted. This requirement shall also apply to all other areas not specifically designated above.

3.2.2 Backfill for Appurtenances

After the manhole, catchbasin, inlet, or similar structure has been constructed and the concrete has been allowed to cure for 7 days, backfill shall be placed in such a manner that the structure will not be damaged by the shock of falling earth. The backfill material shall be deposited and compacted as specified for final backfill, and shall be brought up evenly on all sides of the structure to prevent eccentric loading and excessive stress.

3.3 SPECIAL REQUIREMENTS

Special requirements for both excavation and backfill relating to the specific utilities are as follows:

3.3.1 Water Lines

Trenches shall be of a depth to provide a minimum cover of 6 feet from the existing ground surface, or from the indicated finished grade, whichever is lower, to the top of the pipe.

3.3.2 Plastic Marking Tape

Warning tapes shall be installed directly above the pipe, at a depth of 18 inches below finished grade unless otherwise shown.

3.4 TESTING

Testing shall be the responsibility of the Contractor and shall be performed at no additional cost to the Government.

3.4.1 Testing Facilities

Tests shall be performed by an approved commercial testing laboratory or may be tested by facilities furnished by the Contractor. No work requiring testing will be permitted until the facilities have been inspected and approved by the Contracting Officer.

3.4.2 Testing of Backfill Materials

Classification of backfill materials shall be determined in accordance with ASTM D 2487 and the moisture-density relations of soils shall be determined in accordance with ASTM D 698 REV A. A minimum of one soil classification and one moisture-density relation test shall be performed on each different type of material used for bedding and backfill.

3.4.3 Field Density Tests

Tests shall be performed in sufficient numbers to ensure that the specified density is being obtained. A minimum of one field density test per lift of

backfill for every 150 feet of installation shall be performed. One moisture density relationship shall be determined for every 1,500 cubic yards of material used. Field in-place density shall be determined in accordance with ASTM D 1556 ASTM D 2922. When ASTM D 2922 is used, the calibration curves shall be checked and adjusted using the sand cone method as described in paragraph Calibration of the ASTM publication. ASTM D 2922 results in a wet unit weight of soil and when using this method, ASTM D 3017 shall be used to determine the moisture content of the soil. The calibration curves furnished with the moisture gauges shall be checked along with density calibration checks as described in ASTM D 3017. The calibration checks of both the density and moisture gauges shall be made at the beginning of a job, on each different type of material encountered, at intervals as directed by the Contracting Officer. Copies of calibration curves, results of calibration tests, and field and laboratory density tests shall be furnished to the Contracting Officer. Trenches improperly compacted shall be reopened to the depth directed, then refilled and compacted to the density specified at no additional cost to the Government.

3.4.4 Displacement of Sewers

After other required tests have been performed and the trench backfill compacted to the finished grade surface, the pipe shall be inspected to determine whether significant displacement has occurred. This inspection shall be conducted in the presence of the Contracting Officer. Pipe sizes larger than 36 inches shall be entered and examined, while smaller diameter pipe shall be inspected by shining a light or laser between manholes or manhole locations, or by the use of television cameras passed through the pipe. If, in the judgement of the Contracting Officer, the interior of the pipe shows poor alignment or any other defects that would cause improper functioning of the system, the defects shall be remedied as directed at no additional cost to the Government.

-- End of Section --

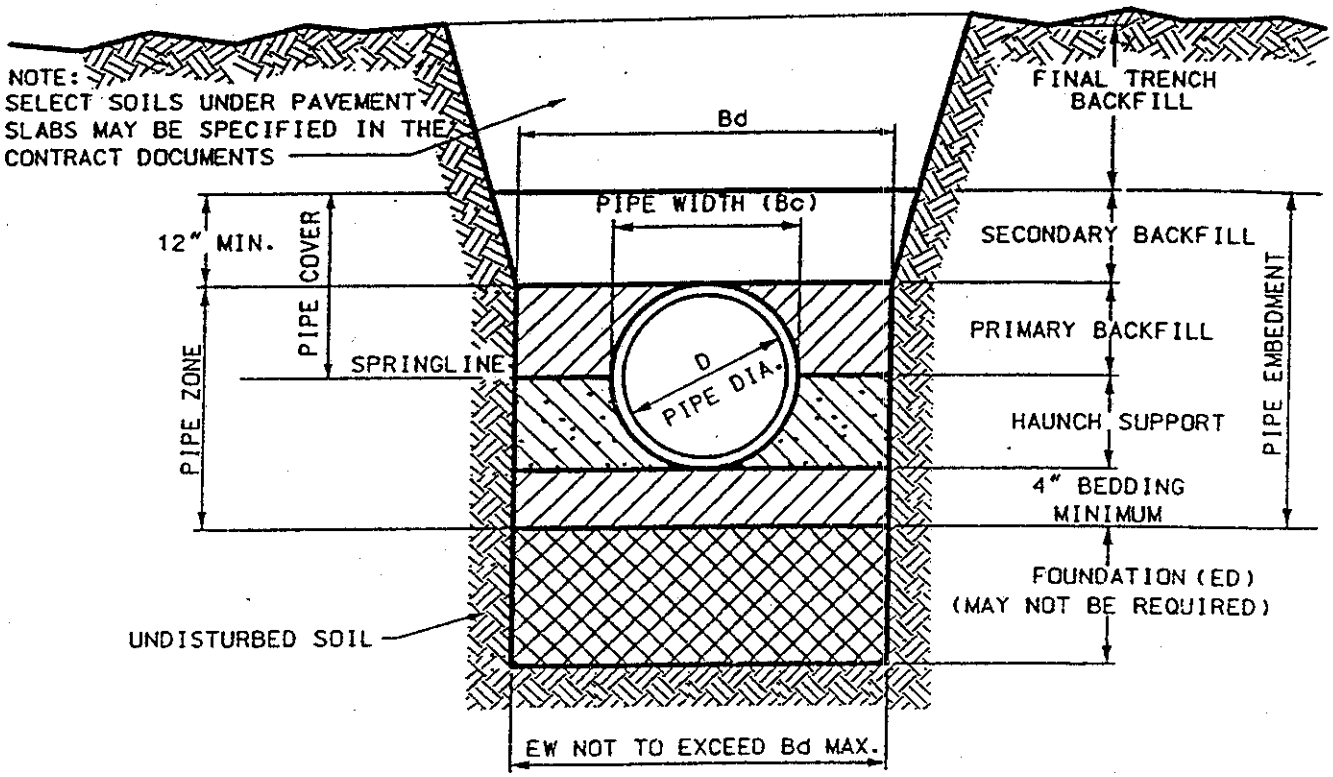

NOTES:

1. HAND PLACED BACKFILL SHALL BE SELECTED, FINELY DIVIDED EXCAVATED MATERIAL FREE FROM DEBRIS, STONES, ORGANIC MATTER OR FROZEN LUMPS AND CAREFULLY COMPACTED.

2. CLEAN CRUSHED STONE FOR BEDDING:
   - 1" MATERIAL FOR PIPE SIZES (D) 18" OR LESS
   - 1 1/2 " MATERIAL FOR PIPE SIZES (D) GREATER THAN 18"
   (SEE 2.03)

3. A. MAXIMUM TRENCH WIDTH
   Bd = D + 24"
   B. MINIMUM TRENCH WIDTH
   Bd = D + 18"
   Bd = TRENCH WIDTH AT TOP OF PIPE

   DEPTH OF BEDDING MATERIAL BELOW PIPE = BC/8, 4" MINIMUM

4. EXTRA FOUNDATION ROCK (CLEAN CRUSHED STONE - 2 1/2 " MATERIAL) WHEN REQUIRED SHALL BE PLACED BELOW NORMAL BEDDING. MEASUREMENT SHALL BE MADE IN CUBIC FEET (LENGTH X EW X ED) AND PAID AT THE UNIT PRICE BID.

5. FOR ROCK EXCAVATION, THE TRENCH SHALL BE OVER EXCAVATED A MINIMUM OF 6" AND REFILLED WITH NORMAL BEDDING.

SEE SHEET 2 FOR PIPE EMBEDMENT MATERIALS.

PIPE EMBEDMENT DETAILS (3010.1)

SECTION TABLE OF CONTENTS

DIVISION 02 - SITE WORK

SECTION 02370

TURF REINFORCEMENT MAT

03/00

PART 1 GENERAL

1.1 DESCRIPTION OF WORK
1.2 SUBMITTALS
1.3 DELIVERY, INSPECTION, STORAGE, AND HANDLING
1.4 SUBSTITUTIONS
1.5 INSTALLER'S QUALIFICATION
1.6 WARRANTY

PART 2 PRODUCTS

2.1 EROSION CONTROL BLANKETS
2.1.1 Erosion Control Blankets Type X (Turf Reinforcement Mat)
2.1.2 Seed
2.1.2.1 Seed Classification
2.1.3 Staking
2.1.4 Staples

PART 3 EXECUTION

3.1 EROSION CONTROL PLAN
3.2 SITE PREPARATION
3.2.1 Finished Grade
3.3 INSTALLATION
3.3.1 Erosion Control Blankets
3.3.2 Grading, Seeding, and Fertilizing
3.4 CLEAN-UP
3.5 MAINTENANCE RECORD
3.5.1 Maintenance
3.5.1.1 Maintenance Instructions
3.5.2 Patching and Replacement
3.6 SATISFACTORY STAND OF GRASS PLANTS

-- End of Section Table of Contents --

SECTION 02370

TURF REINFORCEMENT MAT

03/00

PART 1 GENERAL

1.1 DESCRIPTION OF WORK

The work shall consist of furnishing and installing the erosion control blanket/turf reinforcement matting, including stapling, anchoring and miscellaneous related work, within the areas identified on the contract drawings. This work shall include all necessary materials, labor, supervision and equipment for installation of the turf reinforcement mat. This section shall be coordinated with the requirements of Section 02921 SEEDING, Section 02210 GRADING, and Section 02215 TOPSOIL.

1.2 SUBMITTALS

Government approval is required for submittals with a "G" designation; submittals not having a "G" designation are for information only. When used, a designation following the "G" designation identifies the office that will review the submittal for the Government. The following shall be submitted in accordance with Section 01330 SUBMITTAL PROCEDURES:

SD-03 Product Data

Erosion Control Blankets; G-ED

Manufacturer's literature including physical characteristics, application and installation instructions.

Equipment; G-RE

A listing of equipment to be used for the application of erosion control materials.

SD-04 Samples

Materials; G-ED

Erosion control blankets; 6 inch square.

SD-07 Certificates

Turf Reinforcement Mat; G-ED

Prior to delivery of materials, certificates of compliance attesting that materials meet the specified requirements. Certified copies of the material certificates shall include the following.

Certification of origin including the name, address and

telephone number of manufacturer.

Installer's Qualification; G-RE

The installer's company name and address; training and experience and or certification.

SD-10 Operation and Maintenance Data

Maintenance Instructions; G-RE

Instruction for year-round care of installed material. The Contractor shall include manufacturer supplied spare parts.

1.3 DELIVERY, INSPECTION, STORAGE, AND HANDLING

Materials shall be stored in designated areas and as recommended by the manufacturer protected from the elements, direct exposure, and damage. Material shall be free of defects that would void required performance or warranty. Erosion control blankets shall be furnished in rolls with suitable wrapping to protect against moisture and extended ultraviolet exposure prior to placement. Erosion control blanket shall be labeled to provide identification sufficient for inventory and quality control purposes.

1.4 SUBSTITUTIONS

Substitutions will not be allowed without written request and approval from the Contracting Officer.

1.5 INSTALLER'S QUALIFICATION

The installer shall be certified by the manufacturer for training and experience installing the material.

1.6 WARRANTY

Erosion control material shall have a warranty for use and durable condition for project specific installations. Permanent erosion control materials shall carry a minimum three year warranty.

PART 2 PRODUCTS

2.1 EROSION CONTROL BLANKETS

2.1.1 Erosion Control Blankets Type X (Turf Reinforcement Mat)

The permanent erosion control blanket/turf reinforcement mat shall be the same as or equal to PEC-MAT as produced by Greenstreak, Inc. The physical properties of the turf reinforcement mat shall provide a permissible shear stress level equal to or greater than 4 lbs./sq. ft. with grass roots as the vegetative component.

2.1.2 Seed

2.1.2.1 Seed Classification

Seed shall be in accordance with Section 02921 SEEEDING.

2.1.3 Staking

Staking shall be as recommended by the manufacturer.

2.1.4 Staples

Staples shall be as recommended by the manufacturer.

PART 3 EXECUTION

3.1 EROSION CONTROL PLAN

The Contractor shall submit an erosion control plan as part of the Storm Water Pollution Preventation Plan (SWPPP) in accordance with Section 01356 STORM WATER POLLUTION PREVENTION MEASURES. The work schedule shall coordinate the timing of land disturbing activities with the provision of erosion control measures. Erosion control operations shall be performed under favorable weather conditions; when excessive moisture, frozen ground or other unsatisfactory conditions prevail, the work shall be stopped as directed. When special conditions warrant a variance to earthwork operations, a revised construction schedule shall be submitted for approval. Erosion control materials shall not be applied in adverse weather conditions which could affect their performance.

3.2 SITE PREPARATION

3.2.1 Finished Grade

Before placing the erosion control blanket/turf reinforcement mat the Contractor shall ensure that the subgrade has been graded smooth, has no depressed or void areas, and is free from obstructions such as tree roots, projecting stones or other foreign matter. The Contractor shall verify that finished grades are as indicated on the drawings. Finish grading and compaction shall be completed in accordance with Section 02210 GRADING, and shall be approved prior to commencement of seeding and fertilizing operations and placement of the turf reinforcement mat.

3.3 INSTALLATION

3.3.1 Erosion Control Blankets

a. Erosion control blankets shall be installed as indicated and in accordance with manufacturer's recommendations. The extent of erosion control blankets shall be as shown on drawings.

b. Where exposed to overland sheet flow, a trench shall be located at the uphill termination. The erosion control blanket shall be stapled to the bottom of the trench. Backfill and compact the trench as required.

3.3.2 Grading, Seeding, and Fertilizing

In each area to be protected, all required finished grading, seeding, and fertilizing shall be completed and approved prior to the commencement of the turf reinforcement mat installation.

3.4 CLEAN-UP

Excess material, debris, and waste materials shall be disposed offsite at

an approved landfill or recycling center. Immediately upon completion of the installation in an area, the area shall be protected against traffic or other use as directed by the Contracting Officer.

3.5 MAINTENANCE RECORD

A record shall be furnished describing the maintenance work performed, record of measurements and findings for product failure, recommendations for repair, and products replaced.

3.5.1 Maintenance

Maintenance shall include eradicating weeds; protecting slopes from surface erosion; maintaining the performance of the erosion control materials; protecting installed areas from traffic. Vehicles shall not be permitted directly on the blankets until grass plants have been established.

3.5.1.1 Maintenance Instructions

Written instructions containing sketchesand other necessary information shall be furnished describing the care of the installed material, including when and where maintenance should occur and the procedures for material replacement.

3.5.2 Patching and Replacement

Unless otherwise directed, material shall be placed, seamed or patched as recommended by the manufacturer. Material not meeting the required performance as a result of placement, seaming, or patching shall be removed from the site. The Contractor shall replace the unacceptable material at no additional cost to the Government.

3.6 SATISFACTORY STAND OF GRASS PLANTS

When erosion control blanket type X (turf reinforcement mat) is installed, the grass plants shall be evaluated in accordance with SECTION 02921 SEEDING.

-- End of Document --

SECTION TABLE OF CONTENTS

DIVISION 02 - SITE WORK

SECTION 02430

RETAINING WALL TIE BACKS

PART 1 GENERAL

1.1 REFERENCES
1.2 SUBMITTALS
1.3 DELIVERY, STORAGE, AND HANDLING

PART 2 PRODUCTS

2.1 TIE BACKS
2.1.1 Design Calculations
2.1.2 Anchor Bars
2.1.3 Anchor Plates
2.1.4 Hex Nuts
2.1.5 Bar Couplers
2.1.6 Centralizers
2.1.7 Anchor Sleeves
2.1.8 Bondbreaking Sheath
2.1.9 Corrosion Inhibiting grease
2.1.10 Sealant
2.2 GROUT MATERIALS
2.2.1 Strength
2.2.2 Cement
2.2.3 Water
2.2.4 Fly Ash
2.2.5 Sand
2.2.6 Grout and Vent Tubes

PART 3 EXECUTION

3.1 DRILLING HOLES
3.2 INSTALLATION OF ANCHOR BARS
3.3 GROUTING
3.3.1 Equipment
3.3.2 Preparation for Bonded Length Grouting
3.3.3 Bonded Length Grouting
3.3.4 Preparation for Unbonded Length Grouting
3.3.5 Unbonded Length Grouting (Anchor Sleeve Grout Fill)
3.4 TESTING
3.4.1 EARLY LOADING
3.4.2 Testing Equipment
3.4.3 Performance Test
3.4.4 Proof Test
3.4.5 Test Acceptance Criteria
3.5 MEASUREMENT AND PAYMENT

-- End of Section Table of Contents --

SECTION 02430

RETAINING WALL TIE BACKS

PART 1 GENERAL

1.1 REFERENCES

The publications listed below form a part of this specification to the extent referenced. The publications are referred to in the text by basic designation only.

AMERICAN SOCIETY FOR TESTING AND MATERIALS (ASTM)

ASTM A 36	1996 Carbon Structural Steel
ASTM A 722	(1990) Uncoated High-Strength Steel Bar for Prestressing Concrete
ASTM C 144	1993) Aggregate for Masonry Mortar
ASTM C 150	(1996) Portland Cement
ASTM C 618	(1997) Coal Fly Ash and Raw or Calcined Natural Pozzolan for Use as a Mineral Admixture in Concrete
ASTM C 1107	(1997) Packaged Dry, Hydraulic-Cement Grout (Nonshrink)

CORPS OF ENGINEERS (COE)

COE CRD-C 400	(1963) Requirements for Water for Use in Mixing or Curing Concrete

AMERICAN ASSOCIATION OF STATE HIGHWAY AND TRANSPORTATION OFFICIALS (AASHTO)

AASHTO	(1996) Standard Specifications for Highway Bridges

1.2 SUBMITTALS

Government approval is required for submittals with a "G" designation; submittals not having a "G" designation are for information only. When used, a designation following the "G" designation identifies the office that will review the submittal for the Government. The following shall be submitted in accordance with Section 01330 SUBMITTAL PROCEDURES:

SD-02 Shop Drawings

Tie back layout and details; G-ED;

Diagram of tie backs showing locations, identifying numbers, design loads, minimum bonded and unbonded lengths, splice locations, locations of

centralizers, bonded and unbonded length corrosion protection, and details of anchorage assemblies and couplers.

SD-03 Product Data

Tie backs; G-ED;

Bar Couplers; G-ED;

Anchorage Plates and Nuts; G-ED;

Sleeves and Sheathing; G-ED;

Centralizers; G-ED;

Corrosion Inhibiting Grease;

Grout Materials and Equipment; G-ED;

Tensioning Equipment; G-ED;

Description of tie back materials and accessories, including material properties, capacities, and complete installation method and sequence. Description of drilling methods, anchor rod placement procedures, grouting sequence and procedures, testing procedures, and backfilling precautions.

SD-05 Design Data

Design Calculations; G-ED;

Design calculations for grouted tieback diameter and length, and anchor bar diameter.

SD-06 Test Reports

Performance Test and Proof Test; G-ED;

Certified copies of field test reports

SD-07 Certificates

Anchor Bars;

Bar Couplers;

Hex Nuts and Bearing Plates;

Grout Materials;

The contractor shall submit certificates of compliance attesting proof of compliance with the specifications prior to delivery of the certified material to the project site.

1.3 DELIVERY, STORAGE, AND HANDLING

Anchors bars and other materials shall be delivered to the site in a clean and undamaged condition and stored in accordance with manufacturer's recommendations. Anchor bars shall be kept free of dirt, detrimental rust,

or any other deleterious substance. Bars shall be handled and protected prior to installation in such a manner as to avoid corrosion and physical damage thereto.

PART 2 PRODUCTS

2.1 TIE BACKS

The Contractor shall design the tie backs for the design loads indicated on the drawings, subject to approval. The length of the bars shall be such that they will extend, with a minimum of splicing, the full length of the drilled hole into the existing soil, and shall protrude a sufficient distance for the construction of the required anchorage. The ends of bars shall be threaded for an adequate length where bars are to be anchored or spliced.

2.1.1 Design Calculations

The contractor shall submit calculations, signed by a registered Professional Engineer, for design of the tie backs. Each tie back shall be designed for the loads indicated on the drawings. Allowable load shall be the lesser of (a) friction between grout and soil, (b) bond of anchor bar to grout, and (c) allowable tension of steel anchor bar, as given by the following formulas:

(a) Friction between grout and soil = (3.1415)(Dg)(L)(Fv)(K)tan(phi)/FS
where
Dg = average diameter of grout at bonded length
L = bonded length of anchor bar
Fv = avg. depth of bonded length times 110 pounds per cubic foot
K = at-rest earth pressure coefficient = 0.51
tan(phi) = coefficient of friction = 0.56
FS = factor of safety = 2.0

(b) Bond of anchor bar to grout = (3.14159)(Db)(L)(Fb)/FS
where
Db = diameter of bar
L = bonded length of bar
Fb = assumed ultimate bond stress = 800 psi
FS = factor of safety = 2.0

(c) Allowable tension of steel
anchor bar = the lessor of (0.33)(Fu)(Ab) or (0.6)(Fy)(Ab)
Where
Ab = cross sectional area of bar
Fu = specified minimum ultimate tensile stress of bar
Fy = specified minimum yield stress of bar

2.1.2 Anchor Bars

Anchor bars shall conform to ASTM A 722, or other approved structural steel.

2.1.3 Anchor Plates

Plates for anchorage of bars into concrete walls shall be of steel conforming to ASTM A 36, sized as indicated, with holes for installation over anchor bars.

2.1.4 Hex Nuts

Hex nuts for transfer of anchorage forces to anchor plates shall be as recommended by the bar manufacturer, and shall be capable of developing 100 percent of the minimum ultimate tensile capacity of the anchor bar. Threading shall correspond to the threading requirements of the tensioning system for the anchor bars.

2.1.5 Bar Couplers

Couplers for bar splices shall be as recommended by the bar manufacturer, and shall be capable of developing 100 percent of the minimum ultimate tensile capacity of the anchor bar in each bar end joined.

2.1.6 Centralizers

Centralizers capable of positioning anchor bars in drill holes such that a minimum grout cover of 3 inches is achieved all around bars shall be provided. Centralizers for use in anchor sleeves shall position bars such that a minimum grout cover of 2 inches is achieved all around bars. Centralizers shall be constructed of steel or plastic, and shall have a configuration which does not impede or restrict the placement of grout.

2.1.7 Anchor Sleeves

Sleeves for covering unstressed lengths of anchor bars between retaining wall and existing soil surface shall be constructed of rigid polyvinyl chloride. Sleeves shall be of the size indicated, or as required to cover bar couplers

2.1.8 Bondbreaking Sheath

Sheathing for the unbonded length of anchor bars shall be constructed of rigid plastic or polyvinyl chloride with smooth inner and outer surfaces. Thickness of material shall be adequate to prevent crushing or deformation under the required grouting pressures. Size of sheathing shall be adequate to allow free movement of the anchor bar inside the sheathing.

2.1.9 Corrosion Inhibiting grease

Grease for sheathed unbonded length of anchor bars shall provide long-term protection for bars from corrosion, and shall provide adequate lubrication to promote free movement between bars and sheathing.

2.1.10 Sealant

Sealant for ends and splices of anchor sleeves shall be as specified in Section 03150 EXPANSION JOINTS, CONTRACTION JOINTS, AND WATERSTOPS.

2.2 GROUT MATERIALS

Grout shall be as specified herein or as required in the AASHTO Standard Specifications for Highway Bridges, DIVISION II - CONSTRUCTION, paragraph 6.3.2 using Type III cement.

2.2.1 Strength

Strength of grout shall be a minimum of 4,000 psi at 28-days. Materials used in proportioning the grout shall be those used in the actual grouting operation on the project site. At the option of the Contractor, a

pre-package grout may be used provided the strength requirements are met as described above. Prepackaged grout shall conform to ASTM C 1107.

2.2.2 Cement

Cement for mixing grout shall conform to ASTM C 150, Type III. The cement shall meet the requirements for low alkali and for control of false set contained therein.

2.2.3 Water

Water for mixing grout shall be fresh and free from injurious amount of oil, salt, acid, alkali, organic matter, or other deleterious substance as determined by Corps of Engineers Specification COE CRD-C 400.

2.2.4 Fly Ash

Fly ash, if used, shall conform to ASTM C 618, Class F or C.

2.2.5 Sand

Sand for grout shall conform to ASTM C 144, except that the gradation shall be as specified herein. Aggregate shall be a natural sand and particle shape shall be generally rounded or cubical. The sand shall be well graded from fine to coarse within the following limits:

Sieve Designation (U.S. Standard Square Mesh)	Cumulative Percentage by Weight Passing
No. 8	100
No. 16	95 - 100
No. 30	60 - 85
No. 50	20 - 50
No. 100	10 - 30
No. 200	0 - 5

2.2.6 Grout and Vent Tubes

Tubes for grouting and venting of sleeves and drill holes shall be semirigid polyvinyl chloride or polyethylene plastic, 3/8-inch OD and 1/4-inch ID, or larger, at the contractor's option.

PART 3 EXECUTION

3.1 DRILLING HOLES

Holes for the installation of tie backs shall be drilled into the existing soil to the diameters and lengths as shown on the approved shop drawings, and at the inclination shown on the drawings. Inclination and alignment of drilled holes shall be within plus or minus 3 degrees of the planned angle, and within plus or minus 6 inches of the planned location from the ground surface (point of entry). All drilled holes shall be blown clear with compressed air, minimum of 50 psi introduced at the back of the hole, upon completion of drilling. In addition, all holes shall again be blown clean immediately before installation of the anchor bar. Size of drilled holes for tie backs shall be as required for the indicated loads, and as shown on the approved shop drawings. The cuttings from the holes shall be inspected as the drilling progresses to detect the presence of material unsuitable for anchorage. A log shall be maintained for each tie back boring

describing the cuttings produced and shall be provided to the Contracting Officer.

3.2 INSTALLATION OF ANCHOR BARS

The anchor bars shall be installed in accordance with the approved shop drawings and approved installation procedure. Centralizers shall be placed on the anchor bars at a maximum spacing of 10 feet, starting at a distance of 1 foot from the end of the bar to be bonded in the drill hole.

3.3 GROUTING

Grout for anchor bars consists of two separate elements; bonded length grout, and unbondeded length grout (anchor sleeve fill). The grout elements shall conform to the lengths indicated on the approved shop drawings. Grouting of the two elements shall be accomplished in two separate stages.

3.3.1 Equipment

A positive displacement type pump shall be used for grouting. Pump shall be equipped with a pressure gage, capable of measuring pressures of at least 150 psi or twice the actual grout pressure used, to monitor grout pressures. Equipment shall be sized to allow stages of grouting to be pumped in one continuous operation. Grouting equipment shall include a mechanical mixer capable of continuously agitating the grout during placement.

3.3.2 Preparation for Bonded Length Grouting

The indicated unbonded length of each anchor bar shall be covered with a bondbreaking sheath. The annular space between the bar and the sheath shall be completely filled with a corrosion inhibiting grease. The sheath shall be sealed at the ends to prevent the grease from escaping and to prevent grout from entering and contacting the unbonded length of the bar during grouting operations. Grout and vent tubes shall be placed through the bearing plate and positioned in the drill hole.

3.3.3 Bonded Length Grouting

Grout for the bonded length of bars shall be placed in one continuous operation. Grout shall be injected, using grout tubes, from the the lowest (most remote) point of the drill holes. Vent tubes shall be kept clear to allow air and moisture to escape from the drill hole. Grouting shall continue until grout flows from the vent tube, indicating that the drill hole is completely filled. Upon completion of grouting, the grout tube shall remain in the drill hole and shall be completely filled with grout.

3.3.4 Preparation for Unbonded Length Grouting

After anchor bars are placed and grouted in drill holes, and tested, and after the bar extension lengths are coupled to the anchors, anchor sleeves shall be placed around the bar extensions. Anchor sleeves shall be of adequate length to extend, with a minimum of splicing, from the face of the bearing plate embedded in the retaining wall. Centralizers shall be placed on the bars at a maximum spacing of 10 feet. As the bar anchor plates are positioned in the retaining wall and the formwork for the retaining wall is assembled, anchor sleeves shall be cut to fit through the formwork, flush with or slightly embedded into the back face of the retaining wall. Grout

and vent tubes shall penetrate the sleeve at opposite ends (Grout tube at the low end).

3.3.5 Unbonded Length Grouting (Anchor Sleeve Grout Fill)

After the retaining wall concrete is placed and cured, the unbonded length of anchor bars in anchor sleeves shall be grouted. Prior to grouting, all sleeve splices and the interfaces with concrete and anchor plate surfaces at ends of sleeve shall be sealed around the circumference of the sleeve, to prevent leakage of grout. Grouting shall continue until grout flows from the vent tube. The grout and vent tubes shall be completely filled with grout and left in place.

3.4 TESTING

A performance test, as defined below, shall be performed on a selected number of tie backs. A proof test, as defined below, shall be performed on all other tie backs.

3.4.1 EARLY LOADING

No loads shall be applied to anchor bars for a minimum 3 days after completion of first stage grouting. Full tension testing of tie backs shall not be performed until after a minimum of 7 days after completion of first stage grouting. Testing may be performed at an earlier time if compressive strength test specimens for the grout are prepared and tested, and submitted test results demonstrate that the grout has achieved the full specified compressive strength. Early testing of tie backs shall not be performed without approval.

3.4.2 Testing Equipment

A dial gauge or vernier scale capable of measuring displacements to 0.001 inches shall be used to measure tie back movement. It shall have adequate travel so that total ground movement can be measured without resetting the device. A hydraulic jack and pump shall be used to apply the test load. The jack and a calibrated pressure gauge shall be used to measure the applied load. The pressure gauge shall be graduated in 100 psi increments or less. When the theoretical elastic elongation of the total anchor length at the maximum test load exceeds the ram travel of the jack, the procedure for recycling the jack ram shall be included in the shop drawings. The stressing equipment shall be placed over the anchor rod in such manner that the jack, bearing plate, and load cell are axially aligned with the anchor rod and the anchor rod is centered within the equipment.

3.4.3 Performance Test

A random 5 percent of tiebacks shall be performance tested. The performance test shall be made by incrementally loading and unloading the tieback in accordance with the following schedule. The load shall be raised from one increment to the another immediately after recording the tie back movement. The tie back movement shall be measured and recorded to the nearest 0.001 inch with respect to an independent fixed reference point at each increment of load. The load shall be monitored with a pressure gauge. The reference pressure gauge shall be placed in series with the pressure gauge during each performance test. If the load determined by the reference pressure gauge and the load determined by the pressure gauge differ by more than 10 percent, the jack, pressure gauge, and reference pressure gauge shall be recalibrated.

Performance Test Schedule (percent of tie back design load)
10%
25%*
10%**
25%
50%*
10%**
25%
50%
75%*
10%**
25%
50%
75%
100%*
10%**
25%
50%
75%
100%
120%
133%* (hold at maximum test load for specified time)
gradually reduce to zero load

At load increments other than the maximum test load, the load shall be held just long enough to obtain the movement reading. The maximum test load shall be held for 10 minutes. The jack shall be repumped as necessary in order to maintain a constant load. The load-hold period shall start as soon as the maximum test load is applied and the tie back movement shall be measured and recorded at 1, 2, 3, 4, 5, 6, and 10 minutes. If the tie back movements between 1 minute and 10 minutes exceeds 0.04 inches, the maximum test load shall be held for an additional 50 minutes and movement shall be recorded at 15. 20. 25, 30, 45 and 60 minutes. A graph shall be constructed showing a plot of tie back movement versus load for each load increment marked with an asterisk (*) in the performance test schedule, and a plot of each residual movement marked with a double asterisk (**) versus the highest previously applied load.

3.4.4 Proof Test

The proof test shall be performed by incrementally loading the tie back in accordance with the following schedule. The load shall be raised from one increment to another immediately after recording the tieback movement. The tie back movement shall be measured and recorded to the nearest 0.001 inches with respect to an independent fixed reference point at each increment of load. The load shall be monitored with a pressure gauge.

Proof Test Schedule (percent of tie back design load)
10%
25%
50%
75%
100%
120%
133% (hold at maximum test load for specified time)
gradually reduce to zero

At load increments other than the maximum test load, the load shall be held

just long enough to obtain the movement reading. The maximum test load shall be held for 10 minutes. The jack shall be repumped as necessary in order to maintain a constant load. The load-hold period shall start as soon as the maximum test load is applied and the tie back movement shall be measured and recorded at 1, 2, 3, 4, 5, 6, and 10 minutes. If the tie back movements between 1 minute and 10 minutes exceeds 0.04 inches, the maximum test load shall be held for an additional 50 minutes and movement shall be recorded at 15. 20. 25, 30, 45 and 60 minutes. A graph shall be constructed showing a plot of tie back movement versus load for each load increment

3.4.5 Test Acceptance Criteria

A performance-tested or proof tested tie back is acceptable if:

(a) The tie back resists the maximum test load with less than 0.04 inches of movement between 1 minute and 10 minutes, or less than 0.08 inches between 1 minute and 60 minutes.

(b) Total movement at the maximum test load exceeds 80 percent of the theoretical elastic elongation of the unbonded length.

If any tie backs fail the acceptance criteria, the contractor shall redesign the tiebacks by increasing bonded length and/or diameter, modifying installation techniques, or increasing the number of tiebacks to reduce the load per tie back.

3.5 MEASUREMENT AND PAYMENT

The contract prices for the various items under this section shall constitute full compensation for furnishing all materials, labor, tools, equipment, and incidentals necessary to accomplish the work herein, including testing, cleanup of the area and disposal of waste water and grout. -- End of Section --

SECTION TABLE OF CONTENTS

DIVISION 02 - SITE WORK

SECTION 02440

TRAFFIC SIGNS

01/01

PART 1 GENERAL

1.1 REFERENCES
1.2 GENERAL

PART 2 PRODUCTS

2.1 SIGN POSTS
2.1.1 Steel Flanged Channel Section (U-Shape)
2.2 ALUMINUM SIGN PANELS
2.3 RETROREFLECTIVE SHEETING
2.4 HARDWARE

PART 3 EXECUTION

3.1 GENERAL
3.2 SIGN POSTS
3.3 SIGN PANELS
3.4 LETTERS, NUMERALS, ARROWS, SYMBOLS, AND BORDERS
3.5 LOCATION AND POSITION OF SIGNS

-- End of Section Table of Contents --

SECTION 02440

TRAFFIC SIGNS
01/01

PART 1 GENERAL

1.1 REFERENCES

The publications listed below form a part of this specification to the extent referenced. The publications are referred to in the text by basic designation only.

AMERICAN SOCIETY FOR TESTING AND MATERIALS (ASTM)

ASTM A 36	(1997a) Carbon Structural Steel
ASTM A 123	(1997a) Zinc (Hot-Dip Galvanized) Coatings on Iron and Steel Products
ASTM B 209	(1996) Aluminum and Aluminum-Alloy Sheet and Plate
ASTM D 4956	(2000) Retroreflective Sheeting for Traffic Control

AMERICAN NATIONAL STANDARDS INSTITUTE (ANSI) STANDARD

ANSI D6.1e	(1988, Rev 3) Manual on Uniform Traffic Control Devices for Streets and Highways

1.2 GENERAL

All sign faces shall conform to ANSI D6.1e.

PART 2 PRODUCTS

2.1 SIGN POSTS

2.1.1 Steel Flanged Channel Section (U-Shape)

Steel posts shall be fabricated from steel conforming to ASTM A 36 and shall have a minimum yield strength of 30 ksi and a minimum tensile strength of 50 ksi. Steel posts shall have 5/16 to 3/8 inch diameter holes spaced at 1 or 2 inch centers punched or drilled along the centerline of the web prior to galvanizing for the entire length of the post. Posts shall be galvanized in accordance with ASTM A 123.

2.2 ALUMINUM SIGN PANELS

Aluminum sign panels shall conform to ASTM B 209, alloy no.-temper 6061-T6 or 5052-H38. The blanks shall be free from laminations, blisters, open seams, pits, holes, other defects that may affect their appearance or use. The thickness shall be uniform and the blank commercially flat.

2.3 RETROREFLECTIVE SHEETING

Retroreflective sheeting shall conform to ASTM D 4956, Type I, II, III, IV, V, or VI. Type I retroreflective sheeting shall conform to ASTM D 4956, except the minimum coefficients of retroreflection for brown type I sheeting shown in Table I of ASTM D 4956 are amended as follows: 2.0 cd/fc/ft^2 at 0.2 degrees observation angle and -4 degrees entrance angle, 1.0 cd/fc/ft^2 at 0.2 degrees observation angle and +30 degrees entrance angle and at 0.5 degrees observation angle and -4 degrees entrance angle, and 0.5 cd/fc/ft^2 at 0.5 degrees observation angle and +30 degrees entrance angle. All retroreflective sheeting shall have a precoated adhesive which will permanently adhere to the sign panel surface.

2.4 HARDWARE

Bolts, nuts and metal washers shall be either aluminum alloy or commercial quality steel, hot-dip galvanized or cadmium plated after fabrication. Fiber washers shall be of commercial quality.

PART 3 EXECUTION

3.1 GENERAL

Insulating material shall be placed to prevent contact between aluminum and steel material.

3.2 SIGN POSTS

Steel sign posts shall either be driven with a suitable driving head or set in drilled or punched holes. Any posts damaged during driving or otherwise shall be replaced at no additional cost to the Government.

3.3 SIGN PANELS

Clean, degrease and etch the face of metal panels using methods recommended by the retroreflective sheeting manufacturer. After cleaning and degreasing, retroreflective sheeting material shall be applied to the sign panels as recommended by the manufacturer. Shearing, cutting and punching shall be performed prior to preparing the blanks for application of reflective material. Holes shall not be field drilled in any part of the panel. The back side of all sign panels shall be stamped with the month and year that the sign was manufactured. The date shall be located on the lower right side of the back of the sign panel and shall be approximately 1/4 inch high. The date shall be stamped into the sign panel material for a permanent record. Any damaged sign panels shall be replaced at no additional cost to the Government.

3.4 LETTERS, NUMERALS, ARROWS, SYMBOLS, AND BORDERS

Letters, numerals, arrows, symbols, and borders shall be applied on the retroreflective sheeting or opaque background of the sign using the direct or reverse screen process. Messages and borders of a color darker than the background shall be applied to the paint or the retroreflective sheeting using the direct process. Messages and borders shall be of a color lighter than the sign background and shall be applied using the reverse screen process. Opaque or transparent colors, inks, and paints of the type and quality recommended by the retroreflective sheeting manufacturer shall be used in the screen process. The screening shall be performed in a manner

that results in a uniform color and tone, with sharply defined edges of legends and borders and without blemishes on the sign background that will affect intended use. The signs shall be air dried or baked after screening according to the manufacturer's recommendations to provide a smooth hard finish. Any signs with blister's or other blemishes shall be rejected.

3.5 LOCATION AND POSITION OF SIGNS

All signs shall be located and erected in accordance with the drawings and ANSI D6.1e. Unless otherwise shown, signs shall be erected with the sign faces and posts vertical. To reduce specular glare (mirror reflection), sign panels shall be turned 3 degrees away from the road in the direction of travel. The Contracting Officer's Representative shall inspect all signs for specular reflection at night after installation has been completed. If specular reflection is apparent on any sign, it shall be adjusted by the Contractor at his expense to eliminate or minimize specular reflection to the satisfaction of the Contracting Officer's Representative.

-- End of Section --

SECTION TABLE OF CONTENTS

DIVISION 02 - SITE WORK

SECTION 02464A

METAL SHEET PILING

05/92

PART 1 GENERAL

1.1 REFERENCES
1.2 SUBMITTALS
1.3 DELIVERY, STORAGE AND HANDLING

PART 2 PRODUCTS

2.1 METAL SHEET PILING
2.2 TESTS, INSPECTIONS, AND VERIFICATIONS
2.2.1 Materials Tests

PART 3 EXECUTION

3.1 INSTALLATION
3.1.1 Pile Driving Equipment
3.1.1.1 Driving Hammers
3.1.2 Placing and Driving
3.1.2.1 Placing
3.1.2.2 Driving
3.1.3 Cutting-Off and Splicing
3.1.4 Inspection of Driven Piling
3.1.5 Pulling and Redriving

-- End of Section Table of Contents --

SECTION 02464A

METAL SHEET PILING
05/92

PART 1 GENERAL

1.1 REFERENCES

The publications listed below form a part of this specification to the extent referenced. The publications are referred to in the text by basic designation only.

AMERICAN SOCIETY FOR TESTING AND MATERIALS (ASTM)

ASTM A 6/A 6M	(2000) General Requirements for Rolled Structural Steel Bars, Plates, Shapes, and Sheet Piling
ASTM A 328/A 328M	(200) Steel Sheet Piling

1.2 SUBMITTALS

Government approval is required for submittals with a "G" designation; submittals not having a "G" designation are for information only. When used, a designation following the "G" designation identifies the office that will review the submittal for the Government. The following shall be submitted in accordance with Section 01330 SUBMITTAL PROCEDURES:

SD-02 Shop Drawings

Metal Sheet Piling; G-ED

Detail drawings for sheet piling including fabricated sections shall show complete piling dimensions and details, driving sequence and location of installed piling. Detail drawings shall include details and dimensions of templates and other temporary guide structures for installing piling. Detail drawings shall provide details of the method of handling piling to prevent permanent deflection, distortion or damage to piling interlocks.

SD-03 Product Data

Pile Driving Equipment; G-ED

Complete descriptions of sheet piling driving equipment including hammers, [jetting equipment,] extractors, protection caps and other installation appurtenances shall be submitted for approval prior to commencement of work.

Pulling and Redriving; G-ED

The proposed method of pulling sheet piling shall be submitted and approved prior to pulling any piling.

SD-06 Test Reports

Materials Tests;

Certified materials tests reports showing that sheet piling and appurtenant metal materials meet the specified requirements shall be submitted for each shipment and identified with specific lots prior to installing materials. Material test reports shall meet the requirements of ASTM A 6/A 6M.

1.3 DELIVERY, STORAGE AND HANDLING

Materials delivered to the site shall be new and undamaged and shall be accompanied by certified test reports. The manufacturer's logo and mill identification mark shall be provided on the sheet piling as required by the referenced specifications. Sheet piling shall be stored and handled in the manner recommended by the manufacturer to prevent permanent deflection, distortion or damage to the interlocks. Storage of sheet piling should also facilitate required inspection activities.

PART 2 PRODUCTS

2.1 METAL SHEET PILING

Metal sheet piling shall be hot-rolled steel sections conforming to ASTM A 328/A 328M, or cold-formed steel sections formed from hot-rolled steel meeting the chemical and mechanical requirements of ASTM A 328/A 328M. The interlocks of sheet piling shall be free-sliding, provide a swing angle suitable for the intended installation but not less than 5 degrees when interlocked, and maintain continuous interlocking when installed. Fabricated tees, wyes and cross pieces shall be fabricated of piling sections with a minimum web thickness of 1/2 inch. Sheet piling shall be provided with standard pulling holes. Metalwork fabrication for sheet piling shall be as specified herein.

2.2 TESTS, INSPECTIONS, AND VERIFICATIONS

Requirements for material tests, workmanship and other measures for quality assurance shall be as specified and in Section 05055 METALWORK FABRICATION, MACHINE WORK, AND MISCELLANEOUS PROVISIONS.

2.2.1 Materials Tests

Sheet piling and appurtenant materials shall be tested and certified by the manufacturer to meet the specified chemical, mechanical and section property requirements prior to delivery to the site. Testing of sheet piling for mechanical properties shall be performed after the completion of all rolling and forming operations. Testing of sheet piling shall meet the requirements of ASTM A 6/A 6M.

PART 3 EXECUTION

3.1 INSTALLATION

3.1.1 Pile Driving Equipment

Pile driving equipment shall conform to the following requirements.

3.1.1.1 Driving Hammers

Hammers shall be steam, air, or diesel drop, single-acting, double-acting, differential-acting, or vibratory] type.

3.1.2 Placing and Driving

3.1.2.1 Placing

Any excavation required within the area where sheet pilings are to be installed shall be completed prior to placing sheet pilings. \ Pilings shall be carefully located as shown on the drawings or directed by the Contracting Officer. Pilings shall be placed plumb with out-of-plumbness not exceeding 1/8 inch per foot of length and true to line. Temporary wales, templates, or guide structures shall be provided to insure that the pilings are placed and driven to the correct alignment. At least two templates shall be used in placing each piling and the maximum spacing of templates shall not exceed 20 feet. Pilings properly placed and driven shall be interlocked throughout their length with adjacent pilings to form a continuous diaphragm throughout the length or run of piling wall.

3.1.2.2 Driving

Pilings shall be driven with the proper size hammer and by approved methods so as not to subject the pilings to damage and to ensure proper interlocking throughout their lengths. Driving hammers shall be maintained in proper alignment during driving operations by use of leads or guides attached to the hammer. Caution shall be taken in the sustained use of vibratory hammers when a hard driving condition is encountered to avoid interlock-melt or damages. The use of vibratory hammers should be discontinued and impact hammers employed when the penetration rate due to vibratory loading is one foot or less per minute. A protecting cap shall be employed in driving when using impact hammers to prevent damage to the tops of pilings. Pilings damaged during driving or driven out of interlock shall be removed and replaced at the Contractor's expense. Pilings shall be driven without the aid of a water jet. Adequate precautions shall be taken to insure that pilings are driven plumb. Pilings in each run or continuous length of piling wall shall be driven alternately in increments of depth to the required depth or elevation. No piling shall be driven to a lower elevation than those behind it in the same run except when the pilings behind it cannot be driven deeper. If the piling next to the one being driven tends to follow below final elevation it may be pinned to the next adjacent piling. If obstructions restrict driving a piling to the specified penetration the obstructions shall be removed or penetrated with a chisel beam. If the Contractor demonstrates that removal or penetration is impractical the Contractor shall make changes in the design alignment of the piling structure as directed to insure the adequacy and stability of the structure. Pilings shall be driven to depths shown and shall extend up to the elevation indicated for the top of pilings. Pilings shall not be driven within 100 feet of concrete less than 7 days old.

3.1.3 Cutting-Off and Splicing

Pilings driven to refusal or to the point where additional penetration cannot be attained and are extending above the required top elevation in excess of the specified tolerance shall be cut off to the required elevation. Pilings driven below the required top elevation and pilings damaged by driving and cut off to permit further driving shall be extended as required to reach the top elevation by splicing when directed at no additional cost to the Government. Pilings adjoining spliced pilings shall be full length unless otherwise approved. Ends of pilings to be spliced shall be squared before splicing to eliminate dips or camber. Pilings shall be spliced together with concentric alignment of the interlocks so

that there are no discontinuities, dips or camber at the abutting interlocks. Spliced pilings shall be free sliding and able to obtain the maximum swing with contiguous pilings. The tops of pilings excessively battered during driving shall be trimmed when directed at no cost to the Government. Piling cut-offs shall become the property of the Contractor and shall be removed from the site. All cutting shall be done in a neat and workmanlike manner. A straight edge shall be used in cuts made by burning to avoid abrupt nicks.

3.1.4 Inspection of Driven Piling

The Contractor shall inspect the interlocked joints of driven pilings extending above ground. Pilings found to be out of interlock shall be removed and replaced at the Contractor's expense.

3.1.5 Pulling and Redriving

Whne, in the opinion of the Contracting Officer, there is doubt as to the condition of underground portion of pilings, the Contractor may be directed to pull selected pilings. Any piling so pulled and found to be damaged to the extent that its usefulness in the structure is impaired shall be removed and replaced at the Contractor's expense. Pilings pulled and found to be in satisfactory condition shall be redriven when directed.

-- End of Section --

SECTION TABLE OF CONTENTS

DIVISION 02 - SITE WORK

SECTION 02466

DRILLED FOUNDATION CAISSONS (PIERS)

12/97

PART 1 GENERAL

1.1 REFERENCES
1.2 SUBMITTALS
1.3 QUALIFICATIONS
1.3.1 Specialty Subcontractor
1.4 PROJECT/SITE CONDITIONS
1.4.1 Subsurface Data
1.4.2 Caisson Drilling Equipment
1.5 SEQUENCE OF WORK
1.5.1 Caisson Excavation
1.5.2 Acceptance
1.6 SUPERVISION, INSPECTION, AND SAFETY
1.6.1 Contractor Supervision
1.6.2 Government Inspection
1.6.3 Safety Precautions for Workmen and Inspectors
1.6.3.1 Life Line
1.6.3.2 Ventilation

PART 2 PRODUCTS

2.1 CONCRETE WORK
2.1.1 Coarse Aggregate
2.1.2 Reinforcing Steel
2.1.3 Strength

PART 3 EXECUTION

3.1 PREPARATION
3.2 INSTALLATION
3.3 TOLERANCES
3.4 PROTECTION

-- End of Section Table of Contents --

SECTION 02466

DRILLED FOUNDATION CAISSONS (PIERS)
12/97

PART 1 GENERAL

1.1 REFERENCES

The publications listed below form a part of this specification to the extent referenced. The publications are referred to in the text by basic designation only.

AMERICAN SOCIETY FOR TESTING AND MATERIALS (ASTM)

ASTM A 615/A 615M	(1996a) Deformed and Plain Billet-Steel Bars for Concrete Reinforcement

1.2 SUBMITTALS

Government approval is required for submittals with a "G" designation; submittals not having a "G" designation are for information only. When used, a designation following the "G" designation identifies the office that will review the submittal for the Government. The following shall be submitted in accordance with Section 01330 SUBMITTAL PROCEDURES:

SD-02 Shop Drawings

Caissons; G-ED

Detailed records in an approved form, for each caisson, showing shaft diameters, top and bottom elevations, soil description, casing description, water conditions, concrete strength, concrete volume, rock elevations, dates of excavation and concrete placement, and other pertinent information. Upon completion of caisson work, the Contractor shall provide a record of centerline locations based on the survey of the registered surveyor or engineer provided by the Contractor. In addition, corrective measures shall be similarly recorded. A complete tabulation of all records pertaining to approved caissons shall be delivered to the Contracting Officer.

SD-07 Certificates

Caissons; G-ED

A certified copy of the survey. Lines and levels shall be established and caisson centerline locations staked and maintained by a registered surveyor or engineer provided by the Contractor.

Qualifications; G-ED

Qualifications of the foundation system Contractor shall show that he has been engaged in the successful installation of drilled foundation caissons for at least 5 years.

1.3 QUALIFICATIONS

1.3.1 Specialty Subcontractor

The work shall be performed by a specialty subcontractor, specializing in the specified foundation system and having 5 years experience installing the specified foundation system under similar subsurface conditions.

1.4 PROJECT/SITE CONDITIONS

1.4.1 Subsurface Data

Subsurface soil data logs are shown on the drawings. The subsurface investigation report and samples of materials, as taken from subsurface investigations, are available for examination from the Contracting Officer.

1.4.2 Caisson Drilling Equipment

Caisson drilling equipment shall have adequate torque capacity and downward force capacity for the contract site conditions.

1.5 SEQUENCE OF WORK

1.5.1 Caisson Excavation

Excavation of caissons or groups of caissons shall be performed so that reinforcing steel and concrete placement is a continuous operation performed the same day that the excavation is completed. Excavations shall not be left open overnight.

1.5.2 Acceptance

Concrete shall be placed within 3 hours after approval of the completed excavation.

1.6 SUPERVISION, INSPECTION, AND SAFETY

1.6.1 Contractor Supervision

The Contractor shall provide for the supervision of all phases of drilled pier construction. Supervision shall be the Contractor's responsibility as outlined in Quality Control provisions of the SPECIAL CONTRACT REQUIREMENTS. Each drilled pier excavation shall be checked by the Contractor for its depth, water removal, cleanup, workmanship, and for all tolerance requirements before any concrete is placed.

1.6.2 Government Inspection

The Contracting Officer will inspect each drilled pier excavation. Concrete shall not be placed until the excavation has been approved by the Contracting Officer. The Contractor shall furnish the Contracting Officer all necessary equipment required for proper inspection of drilled pier excavations.

1.6.3 Safety Precautions for Workmen and Inspectors

1.6.3.1 Life Line

If it is necessary for someone to enter into a drilled pier excavation, e ach person entering a drilled pier excavation shall be provided with a life line rigged so that the person can be immediately hoisted out of the excavation in an emergency. The life line shall be suitable for instant rescue, securely fastened to a shoulder harness, and separated from any line used to remove excavated materials. No person shall be lowered into a drilled pier excavation prior to casing the shaft through the overburden.

1.6.3.2 Ventilation

If it is necessary for someone to enter into a drilled pier excavation, e ach drilled pier excavation shall be provided with a ventilating device of sufficient capacity to assure a safe and healthy atmosphere before workmen and inspectors are permitted to enter the drilled pier excavation and during all work periods.

PART 2 PRODUCTS

2.1 CONCRETE WORK

Concrete work shall be in accordance with requirements of Section 03301 CAST-IN-PLACE STRUCTURAL CONCRETE, as modified herein:

2.1.1 Coarse Aggregate

Maximum size of coarse aggregate shall be 3/4 inch.

2.1.2 Reinforcing Steel

Reinforcing steel shall conform to ASTM A 615/A 615M Grade 60. Steel shall be securely tied into cages and inserted securely in the caissons, in position and alignment, as shown, prior to concrete placement. Welding of reinforcing shall not be permitted.

2.1.3 Strength

Concrete strength shall be 4,000 psi at 28 days. Slump shall be from 5 to 6 inches.

PART 3 EXECUTION

3.1 PREPARATION

a. Caissons shall be excavated to established depths and dimensions shown. Bottoms of caissons shall be cleaned of loose or soft material and leveled. Excavated material shall be disposed of in accordance with Section 02300 EARTHWORK.

b. In drilling caissons, the surrounding soil and the earth walls shall be adequately and securely protected against cave-ins, displacement of the surrounding earth, and retention of ground water, by means of temporary steel casings. Casings shall have outside diameters not less than indicated shaft sizes, shall be a minimum of 1/4 inch thick, and shall not be removed if the structural integrity of the caisson will be impaired, as determined by the Contracting Officer. Temporary steel casings shall be withdrawn, as the concrete is being placed, maintaining sufficient head of concrete within the casing to prevent extraneous material from falling in from the sides and mixing with

the concrete. Casings may be jerked upward a maximum of 4 inches to break the bottom seal, but thereafter shall be removed with a smooth, continuous motion.

c. The inside of steel casings shall be thoroughly cleaned and oiled before reuse.

d. The temporary casing shall be in place from the caisson top to the ground surface until the concrete has set if the elevation of the top of the caisson is below the adjacent ground surface.

e. Not used.

f. Water that flows into the excavations shall be continuously removed and all water shall be removed from the excavation bottom, to the extent possible, prior to concrete placement. The maximum permissible depth of water will be 2 inches. In the event of a severe water condition that makes it impossible or impractical to dewater the excavation, concrete shall be placed using underwater tremie after water movement has stabilized.

g. Not used.

h. Not used.

i. Each caisson excavation will be inspected and approved by the Contracting Officer prior to placing concrete. A record of all inspections, with related construction changes, shall be kept by the Contractor. The Contractor shall provide support personnel for inspection and testing procedures.

3.2 INSTALLATION

a. Concrete shall be continuously placed by methods that ensure against segregation and dislodging of excavation sidewalls, and shall completely fill the shaft. Concrete shall be placed by pumping or drop chutes in dry holes and by tremie or pumping in wet holes. The discharge shall be kept a minimum of 3 feet below the fresh concrete surface during placement. Drilling of caissons or driving of casings shall not be within 20 feet of concrete placed within the last 3 days.

b. Concrete shall be brought to a true level surface inside the shaft, should it become necessary to interrupt placing concrete in any caisson. Prior to placing additional concrete, surfaces shall be cleaned of laitance and slush with one-to-one portland cement grout. The grout shall have a water-cement ratio not exceeding that of the concrete.

c. Not used.

d. Concrete shall be vibrated for full height of caisson.

3.3 TOLERANCES

a. Any caisson out of center or plumb beyond the tolerance specified shall be corrected as necessary to comply with the tolerances and the Contractor shall bear any cost of correction.

b. Cross sections of shafts shall not be less than design dimensions.

c. Caissons shall be installed with top location deviating a maximum of 3 inches from centerline locations.

d. Vertical caissons shall be installed plumb within a maximum of 1-1/2 inches for the first 10 feet and within l/2 inch for each 10 feet of additional depth.

e. Not used.

3.4 PROTECTION

Protection shall be provided around top of the excavation to prevent debris from being dislodged into the excavation and concrete.

-- End of Section --

SECTION TABLE OF CONTENTS

DIVISION 02 - SITE WORK

SECTION 02510A

WATER DISTRIBUTION SYSTEM

04/98

PART 1 GENERAL

1.1 REFERENCES
1.2 PIPING
1.2.1 Service Lines
1.2.2 Distribution Lines 80 mm (3 Inches) or Larger
1.2.3 Potable Water Lines
1.2.4 Plastic Piping System
1.2.5 Excavation, Trenching, and Backfilling
1.3 MANUFACTURER'S REPRESENTATIVE
1.4 SUBMITTALS
1.5 HANDLING
1.5.1 Polyethylene (PE) Pipe Fittings and Accessories
1.5.2 Miscellaneous Plastic Pipe and Fittings

PART 2 PRODUCTS

2.1 PIPE
2.1.1 Plastic Pipe
2.1.1.1 PE Plastic Pipe
2.1.1.2 PVC Plastic Pipe
2.1.2 Ductile-Iron Pipe
2.1.3 Copper Tubing
2.2 FITTINGS AND SPECIALS
2.2.1 PVC Pipe System
2.2.2 Ductile-Iron Pipe System
2.2.3 Copper Tubing System
2.3 JOINTS
2.3.1 Plastic Pipe Jointing
2.3.1.1 PE Pipe
2.3.1.2 PVC Pipe
2.3.2 Ductile-Iron Pipe Jointing
2.3.3 Bonded Joints
2.3.4 Isolation Joints
2.3.5 Copper Tubing Jointing
2.4 VALVES
2.4.1 Gate Valves
2.5 VALVE BOXES
2.6 VALVE PITS
2.7 MISCELLANEOUS ITEMS
2.7.1 Service Clamps
2.7.2 Corporation Stops
2.7.3 Goosenecks
2.7.4 Service Stops
2.7.5 Tapping Sleeves
2.7.6 Service Boxes

2.7.7 Disinfection

PART 3 EXECUTION

3.1 INSTALLATION
3.1.1 Cutting of Pipe
3.1.2 Adjacent Facilities
3.1.2.1 Sewer Lines
3.1.2.2 Water Lines
3.1.2.3 Copper Tubing Lines
3.1.2.4 Nonferrous Metallic Pipe
3.1.3 Joint Deflection
3.1.3.1 Offset for Flexible Plastic Pipe
3.1.3.2 Allowable for Ductile-Iron Pipe
3.1.4 Placing and Laying
3.1.4.1 Plastic Pipe Installation
3.1.4.2 Piping Connections
3.1.4.3 Penetrations
3.1.4.4 Flanged Pipe
3.1.5 Jointing
3.1.5.1 PE Pipe Requirements
3.1.5.2 PVC Plastic Pipe Requirements
3.1.5.3 Ductile-Iron Pipe Requirements
3.1.5.4 Copper Tubing Requirements
3.1.5.5 Bonded Joints Requirements
3.1.5.6 Isolation Joints and Dielectric Fittings
3.1.5.7 Transition Fittings
3.1.6 Installation of Service Lines
3.1.6.1 Service Lines 50 mm (2 Inches) and Smaller
3.1.6.2 Service Lines Larger than 50 mm (2 Inches)
3.1.7 [Enter Appropriate Subpart Title Here]
3.1.7.1 Location of Valves
3.1.7.2 Location of Service Boxes
3.1.8 Tapped Tees and Crosses
3.1.9 Thrust Restraint
3.1.9.1 Thrust Blocks
3.1.9.2 Restrained Joints
3.2 HYDROSTATIC TESTS
3.2.1 Pressure Test
3.2.2 Leakage Test
3.2.3 Time for Making Test
3.2.4 Concurrent Hydrostatic Tests
3.3 BACTERIAL DISINFECTION
3.3.1 Bacteriological Disinfection
3.4 CLEANUP

-- End of Section Table of Contents --

SECTION 02510A

WATER DISTRIBUTION SYSTEM
04/98

ATTACHMENTS: FIG. 5-1, 5-2, 5-3, 5-4, 5-5, 5-6, 5-7 & THRUST BLOCK SIZES INCLUDED

PART 1 GENERAL

1.1 REFERENCES

The publications listed below form a part of this specification to the extent referenced. The publications are referred to in the text by basic designation only.

AMERICAN SOCIETY FOR TESTING AND MATERIALS (ASTM)

ASTM B 88	(1996) Seamless Copper Water Tube
ASTM D 1784	(1999a) Rigid Poly(Vinyl Chloride) (PVC) Compounds and Chlorinated Poly(Vinyl Chloride) (CPVC) Compounds
ASTM D 1785	(1999) Poly(Vinyl Chloride) (PVC) Plastic Pipe, Schedules 40, 80, and 120
ASTM D 2241	(1996b) Poly(Vinyl Chloride) (PVC) Pressure-Rated Pipe (SDR Series)
ASTM D 2464	(1999) Threaded Poly(Vinyl Chloride) (PVC) Plastic Pipe Fittings, Schedule 80
ASTM D 2466	(1999) Poly(Vinyl Chloride) (PVC) Plastic Pipe Fittings, Schedule 40
ASTM D 2467	(1999) Poly(Vinyl Chloride) (PVC) Plastic Pipe Fittings, Schedule 80
ASTM D 2564	(1996a) Solvent Cements for Poly(Vinyl Chloride) (PVC) Plastic Piping Systems
ASTM D 2657	(1997) Heat Fusion Joining Polyolefin Pipe and Fittings
ASTM D 2774	(1994) Underground Installation of Thermoplastic Pressure Piping
ASTM D 2855	(1996) Making Solvent-Cemented Joints with Poly(Vinyl Chloride) (PVC) Pipe and Fittings
ASTM F 477	(1999) Elastomeric Seals (Gaskets) for Joining Plastic Pipe

ASME INTERNATIONAL (ASME)

ASME B1.20.1	(1983; R 1992) Pipe Threads, General Purpose (Inch)
ASME B16.26	(1988) Cast Copper Alloy Fittings for Flared Copper Tubes

AMERICAN WATER WORKS ASSOCIATION (AWWA)

AWWA B300	(1992) Hypochlorites
AWWA B301	(1992) Liquid Chlorine
AWWA C104	(1995) Cement-Mortar Lining for Ductile-Iron Pipe and Fittings for Water
AWWA C105	(1993) Polyethylene Encasement for Ductile-Iron Pipe Systems
AWWA C110	(1993) Ductile-Iron and Gray-Iron Fittings, 3 In. Through 48 In. (75 mm through 1200 mm), for Water and Other Liquids
AWWA C111	(1995) Rubber-Gasket Joints for Ductile-Iron Pressure Pipe and Fittings
AWWA C115	(1996) Flanged Ductile-Iron Pipe With Ductile-Iron or Gray-Iron Threaded Flanges
AWWA C153	(1994; Errata Nov 1996) Ductile-Iron Compact Fittings, 3 In. Through 24 In. (76 mm through 610 mm) and 54 In. through 64 In. (1,400 mm through 1,600 mm) for Water Service
AWWA C500	(1993; C500a) Metal-Sealed Gate Valves for Water Supply Service
AWWA C509	(1994; Addendum 1995) Resilient-Seated Gate Valves for Water Supply Service
AWWA C600	(1993) Installation of Ductile-Iron Water Mains and Their Appurtenances
AWWA C606	(1997) Grooved and Shouldered Joints
AWWA C800	(1989) Underground Service Line Valves and Fittings
AWWA C900	(1997; C900a) Polyvinyl Chloride (PVC) Pressure Pipe, 4 In. Through 12 In., for Water Distribution
AWWA C901	(1996) Polyethylene (PE) Pressure Pipe and Tubing, 1/2 In. Through 3 In., for Water Service
AWWA M23	(1980) Manual: PVC Pipe - Design and Installation

ASBESTOS CEMENT PIPE PRODUCERS ASSOCIATION (ACPPA)

ACPPA Work Practices	(1988) Recommended Work Practices for A/C Pipe

DUCTILE IRON PIPE RESEARCH ASSOCIATION (DIPRA)

DIPRA-Restraint Design	(1997) Thrust Restraint Design for Ductile Iron Pipe

MANUFACTURERS STANDARDIZATION SOCIETY OF THE VALVE AND FITTINGS INDUSTRY (MSS)

MSS SP-80	(1997) Bronze Gate, Globe, Angle and Check Valves

NATIONAL FIRE PROTECTION ASSOCIATION (NFPA)

NFPA 49	(1994) Hazardous Chemicals Data
NFPA 325-1	(1994) Fire Hazard Properties of Flammable Liquids, Gases, and Volatile Solids
NFPA 704	(1996) Identification of the Fire Hazards of Materials for Emergency Response

NSF INTERNATIONAL (NSF)

NSF 14	(1998) Plastics Piping Components and Related Materials
NSF 61	(1999) Drinking Water System Components - Health Effects (Sections 1-9)

1.2 PIPING

This section covers water distribution, service lines, and connections to building service at a point approximately 5 feet outside buildings and structures to which service is required. The Contractor shall have a copy of the manufacturer's recommendations for each material or procedure to be utilized available at the construction site at all times.

1.2.1 Service Lines

Piping for water service lines less than 3 inches in diameter shall be polyvinyl chloride (PVC) plastic, polyethylene, or copper tubing, unless otherwise shown or specified. Piping for water service lines 3 inches and larger shall be ductile iron, polyvinyl chloride (PVC) plastic, unless otherwise shown or specified.

1.2.2 Distribution Lines 80 mm (3 Inches) or Larger

Piping for water distribution lines 3 inches or larger shall be ductile iron, polyvinyl chloride (PVC) through 36 inch nominal diameter plastic, unless otherwise shown or specified.

1.2.3 Potable Water Lines

Piping and components of potable water systems which come in contact with the potable water shall conform to NSF 61.

1.2.4 Plastic Piping System

Plastic piping system components (PVC, polyethylene intended for transportation of potable water shall comply with NSF 14 and be legibly marked with their symbol.

1.2.5 Excavation, Trenching, and Backfilling

Excavation, trenching, and backfilling shall be in accordance with the applicable provisions of Section 02316A EXCAVATION, TRENCHING, AND BACKFILLING FOR UTILITIES SYSTEMS, except as modified herein.

1.3 MANUFACTURER'S REPRESENTATIVE

The Contractor shall have a manufacturer's field representative present at the jobsite during the installation and testing of PE pipe to provide technical assistance and to verify that the materials are being installed in accordance with the manufacturer's prescribed procedures. When the representative feels that the Contractor is installing and testing the PE pipe in a satisfactory manner, certification shall be written to note which individuals employed by the Contractor are capable of properly installing the pipe. The field representative shall advise the Contractor of unsatisfactory conditions immediately when they occur. Such conditions include improper diameter of pipe ends, damaged interior liner, poorly prepared joints, improper curing of joints, moving pipe before joints are cured, bending pipe to follow abrupt changes in trench contours, leaving pipe ends open in trench overnight, not properly drying joints after rain storms, exceeding effective adhesive life, sharp objects in trench bed, backfill that could damage pipe, improper procedure for concrete encasement of pipe, omission of thrust blocks at changes in direction or any other condition which could have an adverse effect on the satisfactory completion and operation of the piping system.

1.4 SUBMITTALS

Government approval is required for submittals with a "G" designation; submittals not having a "G" designation are for information only. When used, a designation following the "G" designation identifies the office that will review the submittal for the Government. The following shall be submitted in accordance with Section 01330 SUBMITTAL PROCEDURES:

SD-03 Product Data

Installation;

The manufacturer's recommendations for each material or procedure to be utilized.

Waste Water Disposal Method;

The method proposed for disposal of waste water from hydrostatic tests and disinfection, prior to performing hydrostatic tests.

Satisfactory Installation;

A statement signed by the principal officer of the contracting

firm stating that the installation is satisfactory and in accordance with the contract drawings and specifications, and the manufacturer's prescribed procedures and techniques, upon completion of the project and before final acceptance.

SD-06 Test Reports

Bacteriological Disinfection; G-RE

Test results from commercial laboratory verifying disinfection.

SD-07 Certificates

Manufacturer's Representative;

The name and qualifications of the manufacturer's representative and written certification from the manufacturer that the representative is technically qualified in all phases of PE, RTRP, and/or RPMP pipe laying and jointing and experienced to supervise the work and train the Contractor's field installers, prior to commencing installation.

Installation;

A statement signed by the manufacturer's field representative certifying that the Contractor's personnel are capable of properly installing the pipe on the project.

1.5 HANDLING

Pipe and accessories shall be handled to ensure delivery to the trench in sound, undamaged condition, including no injury to the pipe coating or lining. If the coating or lining of any pipe or fitting is damaged, the repair shall be made by the Contractor in a satisfactory manner, at no additional cost to the Government. No other pipe or material shall be placed inside a pipe or fitting after the coating has been applied. Pipe shall be carried into position and not dragged. Use of pinch bars and tongs for aligning or turning pipe will be permitted only on the bare ends of the pipe. The interior of pipe and accessories shall be thoroughly cleaned of foreign matter before being lowered into the trench and shall be kept clean during laying operations by plugging or other approved method. Before installation, the pipe shall be inspected for defects. Material found to be defective before or after laying shall be replaced with sound material without additional expense to the Government. Rubber gaskets that are not to be installed immediately shall be stored in a cool and dark place.

1.5.1 Polyethylene (PE) Pipe Fittings and Accessories

PE pipe, fittings, and accessories shall be handled in conformance with AWWA C901.

1.5.2 Miscellaneous Plastic Pipe and Fittings

Polyvinyl Chloride (PVC) pipe and fittings shall be handled and stored in accordance with the manufacturer's recommendations. Storage facilities shall be classified and marked in accordance with NFPA 704, with classification as indicated in NFPA 49 and NFPA 325-1.

PART 2 PRODUCTS

2.1 PIPE

Pipe shall conform to the respective specifications and other requirements specified below.

2.1.1 Plastic Pipe

2.1.1.1 PE Plastic Pipe

Pipe, tubing, and heat-fusion fittings shall conform to AWWA C901.

2.1.1.2 PVC Plastic Pipe

Pipe, couplings and fittings shall be manufactured of material conforming to ASTM D 1784, Class 12454B.

a. Pipe Less Than 4 inch Diameter:

(1) Screw-Joint: Pipe shall conform to dimensional requirements of ASTM D 1785 Schedule 80, with joints meeting requirements of 150 psi working pressure, 200 psi hydrostatic test pressure, unless otherwise shown or specified. Pipe couplings when used, shall be tested as required by ASTM D 2464.

(2) Elastomeric-Gasket Joint: Pipe shall conform to dimensional requirements of ASTM D 1785 Schedule 40, with joints meeting the requirements of 150 psi working pressure, 200 psi hydrostatic test pressure, unless otherwise shown or specified, or it may be pipe conforming to requirements of ASTM D 2241, elastomeric joint, with the following applications:

SDR	Maximum Working Pressure psi	Minimum Hydrostatic Pressure psi
26	100	133
21	120	160
17	150	200
13.5	200	266

(3) Solvent Cement Joint: Pipe shall conform to dimensional requirements of ASTM D 1785 or ASTM D 2241 with joints meeting the requirements of 150 psi working pressure and 200 psi hydrostatic test pressure.

b. Pipe 4 through 12 inch Diameter: Pipe, couplings and fittings shall conform to ANSI/AWWA C900, C905, or C909, Class 150, CIOD pipe dimensions, elastomeric-gasket joint, unless otherwise shown or specified.

2.1.2 Ductile-Iron Pipe

Ductile-iron pipe shall conform to pressure class 350 per ANSI/AWWA C151 /A21.51, working pressure not less than 150 psi, unless otherwise shown or specified. Pipe shall be cement-mortar lined in accordance with ANSI/AWWA C104/A21.4 with asphaltic seal coat. Linings shall be standard. When

installed underground, pipe shall be encased with 9 mil thick polyethylene in accordance with AWWA C105. Flanged ductile iron pipe with threaded flanges shall be in accordance with AWWA C115.

2.1.3 Copper Tubing

Copper tubing shall conform to ASTM B 88, Type K, annealed.

2.2 FITTINGS AND SPECIALS

2.2.1 PVC Pipe System

a. For pipe less than 4 inch diameter, fittings for threaded pipe shall conform to requirements of ASTM D 2464, threaded to conform to the requirements of ASME B1.20.1 for use with Schedule 80 pipe and fittings; fittings for solvent cement jointing shall conform to ASTM D 2466 or ASTM D 2467; and fittings for elastomeric-gasket joint pipe shall be iron conforming to AWWA C110 or AWWA C111. Iron fittings and specials shall be cement-mortar lined (standard thickness) in accordance with AWWA C104.

b. For pipe 4 inch diameter and larger, fittings and specials shall be iron, bell end in accordance with AWWA C110, 150 psi pressure rating unless otherwise shown or specified, except that profile of bell may have special dimensions as required by the pipe manufacturer; or fittings and specials may be of the same material as the pipe with elastomeric gaskets, all in conformance with AWWA C900. Iron fittings and specials shall be cement-mortar lined (standard thickness) in accordance with AWWA C104. Fittings shall be bell and spigot or plain end pipe, or as applicable. Ductile iron compact fittings shall be in accordance with ANSI/AWWA C153 /A21.53.

2.2.2 Ductile-Iron Pipe System

Fittings and specials shall be suitable for 150 psi pressure rating, unless otherwise specified. Fittings and specials for mechanical joint pipe shall conform to ANSI/AWWA C110/A21.10. Fittings and specials for use with push-on joint pipe shall conform to ANSI/AWWA C110/A21.10 and ANSI/AWWA C111 /A21.11. Fittings and specials for grooved and shouldered end pipe shall conform to ANSI/AWWA C606. Fittings and specials shall be cement-mortar lined (standard thickness) in accordance with ANSI/AWWA C104/A21.4. Ductile iron compact fittings shall conform to AWWA C153.

2.2.3 Copper Tubing System

Fittings and specials shall be flared and conform to ASME B16.26.

2.3 JOINTS

2.3.1 Plastic Pipe Jointing

2.3.1.1 PE Pipe

Joints for pipe fittings and couplings shall be strong tight joints as specified for PE in Paragraph INSTALLATION. Joints connecting pipe of differing materials shall be made in accordance with the manufacturer's recommendation, and as approved by the Contracting Officer.

2.3.1.2 PVC Pipe

Joints, fittings, and couplings shall be as specified for PVC pipe. Joints connecting pipe of differing materials shall be made in accordance with the manufacturer's recommendations, and as approved by the Contracting Officer.

2.3.2 Ductile-Iron Pipe Jointing

a. Mechanical joints shall be of the stuffing box type and shall conform to AWWA C111.

b. Push-on joints shall conform to AWWA C111.

c. Rubber gaskets and lubricants shall conform to the applicable requirements of AWWA C111.

2.3.3 Bonded Joints

For all ferrous pipe, a metallic bond shall be provided at each joint, including joints made with flexible couplings, caulking, or rubber gaskets, of ferrous metallic piping to effect continuous conductivity. The bond wire shall be Size 1/0 copper conductor suitable for direct burial shaped to stand clear of the joint. The bond shall be of the thermal weld type.

2.3.4 Isolation Joints

Isolation joints shall be installed between nonthreaded ferrous and nonferrous metallic pipe, fittings and valves. Isolation joints shall consist of a sandwich-type flange isolation gasket of the dielectric type, isolation washers, and isolation sleeves for flange bolts. Isolation gaskets shall be full faced with outside diameter equal to the flange outside diameter. Bolt isolation sleeves shall be full length. Units shall be of a shape to prevent metal-to-metal contact of dissimilar metallic piping elements.

a. Sleeve-type couplings shall be used for joining plain end pipe sections. The two couplings shall consist of one steel middle ring, two steel followers, two gaskets, and the necessary steel bolts and nuts to compress the gaskets.

b. Split-sleeve type couplings may be used in aboveground installations when approved in special situations and shall consist of gaskets and a housing in two or more sections with the necessary bolts and nuts.

2.3.5 Copper Tubing Jointing

Joints shall be compression-pattern flared and shall be made with the specified fittings.

2.4 VALVES

2.4.1 Gate Valves

Gate valves shall be designed for a working pressure of not less than 150 psi. Valve connections shall be as required for the piping in which they are installed. Valves shall have a clear waterway equal to the full nominal diameter of the valve, and shall be opened by turning counterclockwise. The operating nut or wheel shall have an arrow, cast in

the metal, indicating the direction of opening.

a. Valves smaller than 3 inches shall be all bronze and shall conform to MSS SP-80, Type 1, Class 150.

b. Valves 3 inches and larger shall be iron body, bronze mounted, and shall conform to AWWA C500. Flanges shall not be buried. An approved pit shall be provided for all flanged connections.

c. Resilient-Seated Gate Valves: For valves 3 to 12 inches in size, resilient-seated gate valves shall conform to AWWA C509.

2.5 VALVE BOXES

Valve boxes shall be cast iron or concrete, except that concrete boxes may be installed only in locations not subjected to vehicular traffic. Cast-iron boxes shall be extension type with slide-type adjustment and with flared base. The minimum thickness of metal shall be 3/16 inch. Concrete boxes shall be the standard product of a manufacturer of precast concrete equipment. The word "WATER" shall be cast in the cover. The box length shall adapt, without full extension, to the depth of cover required over the pipe at the valve location.

2.6 VALVE PITS

Valve pits shall be constructed at locations indicated or as required above and in accordance with the details shown. Concrete shall have compressive strength of 3000 psi in accordance with Section 03301CAST-IN-PLACE STRUCTURAL CONCRETE.

2.7 MISCELLANEOUS ITEMS

2.7.1 Service Clamps

Service clamps shall have a pressure rating not less than that of the pipe to be connected and shall be either the single or double flattened strap type. Clamps shall have a galvanized malleable-iron body with cadmium plated straps and nuts. Clamps shall have a rubber gasket cemented to the body.

2.7.2 Corporation Stops

Corporation stops shall have standard corporation stop thread conforming to AWWA C800 on the inlet end, with flanged joints, compression pattern flared tube couplings, or wiped joints for connections to goosenecks.

2.7.3 Goosenecks

Copper tubing for gooseneck connections shall conform to the applicable requirements of ASTM B 88, Type K, annealed. Length of cable requirement connections shall be in accordance with standard practice.

2.7.4 Service Stops

Service stops shall be water-works inverted-ground-key type, oval or round flow way, tee handle, without drain. Pipe connections shall be suitable for the type of service pipe used. All parts shall be of bronze with female iron-pipe-size connections or compression-pattern flared tube couplings, and shall be designed for a hydrostatic test pressure not less

than 200 psi.

2.7.5 Tapping Sleeves

Tapping sleeves of the sizes indicated for connection to existing main shall be the cast gray, ductile, or malleable iron, split-sleeve type with flanged or grooved outlet, and with bolts, follower rings and gaskets on each end of the sleeve. Construction shall be suitable for a maximum working pressure of 150 psi. Bolts shall have square heads and hexagonal nuts. Longitudinal gaskets and mechanical joints with gaskets shall be as recommended by the manufacturer of the sleeve. When using grooved mechanical tee, it shall consist of an upper housing with full locating collar for rigid positioning which engages a machine-cut hole in pipe, encasing an elastomeric gasket which conforms to the pipe outside diameter around the hole and a lower housing with positioning lugs, secured together during assembly by nuts and bolts as specified, pretorqued to 50 foot-pound.

2.7.6 Service Boxes

Service boxes shall be cast iron or concrete and shall be extension service boxes of the length required for the depth of the line, with either screw or slide-type adjustment. The boxes shall have housings of sufficient size to completely cover the service stop or valve and shall be complete with identifying covers.

2.7.7 Disinfection

Chlorinating materials shall conform to the following:

Chlorine, Liquid: AWWA B301.

Hypochlorite, Calcium and Sodium: AWWA B300.

PART 3 EXECUTION

3.1 INSTALLATION

3.1.1 Cutting of Pipe

Cutting of pipe shall be done in a neat and workmanlike manner without damage to the pipe. Unless otherwise recommended by the manufacturer and authorized by the Contracting Officer, cutting shall be done with an approved type mechanical cutter. Wheel cutter shall be used when practicable. Copper tubing shall be cut square and all burrs shall be removed. Squeeze type mechanical cutters shall not be used for ductile iron.

3.1.2 Adjacent Facilities

3.1.2.1 Sewer Lines

Where the location of the water pipe is not clearly defined in dimensions on the drawings, the water pipe shall not be laid closer horizontally than 10 feet from a sewer except where the bottom of the water pipe will be at least 12 inches above the top of the sewer pipe, in which case the water pipe shall not be laid closer horizontally than 6 feet from the sewer. Where water lines cross under gravity-flow sewer lines, the sewer pipe, for a distance of at least 10 feet each side of the crossing, shall be fully encased in concrete or shall be made of pressure pipe with no joint located

within 3 feet horizontally of the crossing. Water lines shall in all cases cross above sewage force mains or inverted siphons and shall be not less than 2 feet above the sewer main. Joints in the sewer main, closer horizontally than 3 feet to the crossing, shall be encased in concrete.

3.1.2.2 Water Lines

Water lines shall not be laid in the same trench with sewer lines, gas lines, fuel lines, or electric wiring.

3.1.2.3 Copper Tubing Lines

Copper tubing shall not be installed in the same trench with ferrous piping materials.

3.1.2.4 Nonferrous Metallic Pipe

Where nonferrous metallic pipe, e.g. copper tubing, crosses any ferrous piping material, a minimum vertical separation of 12 inchesshall be maintained between pipes.

3.1.3 Joint Deflection

3.1.3.1 Offset for Flexible Plastic Pipe

Maximum offset in alignment between adjacent pipe joints shall be as recommended by the manufacturer and approved by the Contracting Officer, but shall not exceed 5 degrees.

3.1.3.2 Allowable for Ductile-Iron Pipe

The maximum allowable deflection shall be as given in AWWA C600. If the alignment requires deflection in excess of the above limitations, special bends or a sufficient number of shorter lengths of pipe shall be furnished to provide angular deflections within the limit set forth.

3.1.4 Placing and Laying

Pipe and accessories shall be carefully lowered into the trench by means of derrick, ropes, belt slings, or other authorized equipment. Water-line materials shall not be dropped or dumped into the trench. Abrasion of the pipe coating shall be avoided. Except where necessary in making connections with other lines or as authorized by the Contracting Officer, pipe shall be laid with the bells facing in the direction of laying. The full length of each section of pipe shall rest solidly upon the pipe bed, with recesses excavated to accommodate bells, couplings, and joints. Pipe that has the grade or joint disturbed after laying shall be taken up and relaid. Pipe shall not be laid in water or when trench conditions are unsuitable for the work. Water shall be kept out of the trench until joints are complete. When work is not in progress, open ends of pipe, fittings, and valves shall be securely closed so that no trench water, earth, or other substance will enter the pipes or fittings. Where any part of the coating or lining is damaged, the repair shall be made by and at the Contractor's expense in a satisfactory manner. Pipe ends left for future connections shall be valved, plugged, or capped, and anchored, as shown.

3.1.4.1 Plastic Pipe Installation

PE Pipe shall be installed in accordance with ASTM D 2774. PVC pipe shall

be installed in accordance with AWWA M23. See Figure 5-7 for special requirement.

3.1.4.2 Piping Connections

Where connections are made between new work and existing mains, the connections shall be made by using specials and fittings to suit the actual conditions. When made under pressure, these connections shall be installed using standard methods as approved by the Contracting Officer. Connections to existing asbestos-cement pipe shall be made in accordance with ACPPA Work Practices.

3.1.4.3 Penetrations

Pipe passing through walls of valve pits and structures shall be provided with ductile-iron or Schedule 40 steel wall sleeves. Annular space between walls and sleeves shall be filled with rich cement mortar. Annular space between pipe and sleeves shall be filled with mastic.

3.1.4.4 Flanged Pipe

Flanged pipe shall only be installed above ground or with the flanges in valve pits.

3.1.5 Jointing

3.1.5.1 PE Pipe Requirements

Jointing shall comply with ASTM D 2657, Technique I-Socket Fusion or Technique II-Butt Fusion.

3.1.5.2 PVC Plastic Pipe Requirements

a. Pipe less than 4 inch diameter: Threaded joints shall be made by wrapping the male threads with approved thread tape or applying an approved lubricant, then threading the joining members together. The joint shall be tightened using strap wrenches to prevent damage to the pipe and/or fitting. To avoid excessive torque, joints shall be tightened no more than one thread past hand-tight. Preformed rubber-ring gaskets for elastomeric-gasket joints shall be made in accordance with ASTM F 477 and as specified. Pipe ends for push-on joints shall be beveled to facilitate assembly and marked to indicate when the pipe is fully seated. The gasket shall be prelubricated to prevent displacement. The gasket and ring groove in the bell or coupling shall match. The manufacturer of the pipe or fitting shall supply the elastomeric gasket. Couplings shall be provided with stops or centering rings to assure that the coupling is centered on the joint. Solvent cement joints shall use sockets conforming to ASTM D 2467. The solvent cement used shall meet the requirements of ASTM D 2564; the joint assembly shall be made in accordance with ASTM D 2855 and the manufacturer's specific recommendations.

b. Pipe 4 through 12 inch diameter: Joints shall be elastomeric gasket as specified in AWWA C900. Jointing procedure shall be as specified for pipe less than 4 inch diameter with configuration using elastomeric ring gasket.

3.1.5.3 Ductile-Iron Pipe Requirements

Mechanical and push-on type joints shall be installed in accordance with AWWA C600 for buried lines or AWWA C606 for grooved and shouldered pipe above ground or in pits.

3.1.5.4 Copper Tubing Requirements

Joints shall be made with flared fittings. The flared end tube shall be pulled tightly against the tapered part of the fitting by a nut which is part of the fitting, so there is metal-to-metal contact.

3.1.5.5 Bonded Joints Requirements

Bonded joints shall be installed in accordance with details specified for joints in paragraph JOINTS.

3.1.5.6 Isolation Joints and Dielectric Fittings

Isolation joints and dielectric fittings shall be installed in accordance with details specified in paragraph JOINTS. Dielectric unions shall be encapsulated in a field-poured coal-tar covering, with at least 1/8 inch thickness of coal tar over all fitting surfaces.

3.1.5.7 Transition Fittings

Connections between different types of pipe and accessories shall be made with transition fittings approved by the Contracting Officer.

3.1.6 Installation of Service Lines

Service lines shall include the pipeline connecting building piping to water distribution lines to the connections with the building service at a point approximately 5 feet outside the building where such building service exists. Where building services are not installed, the Contractor shall terminate the service lines approximately 5 feet from the site of the proposed building at a point designated by the Contracting Officer. Such service lines shall be closed with plugs or caps. All service stops and valves shall be provided with service boxes. Service lines shall be constructed in accordance with the following requirements:

3.1.6.1 Service Lines 50 mm (2 Inches) and Smaller

Service lines 2 inches and smaller shall be connected to the main by a directly-tapped corporation stop or by a service clamp. A corporation stop and a copper gooseneck shall be provided with either type of connection. Maximum sizes for directly-tapped corporation stops and for outlets with service clamps shall be as in TABLE I. Where 2 or more gooseneck connections to the main are required for an individual service, such connections shall be made with standard branch connections. The total clear area of the branches shall be at least equal to the clear area of the service which they are to supply. See Figure 5-5, 5-6 for more details.

TABLE I. SIZE OF CORPORATION STOPS AND OUTLET

Pipe Size Inches	Corporation Stops, Inches For Ductile-Iron Pipe	Outlets w/Service Clamps, Inches Single & Double Strap
3	--	1
4	1	1
6	1-1/4	1-1/2
8	1-1/2	2
10	1-1/2	2
12 & larger	2	2

NOTE:

a. Service lines 1-1/2 inches and smaller shall have a service stop.

b. Service lines 2 inches in size shall have a gate valve.

3.1.6.2 Service Lines Larger than 50 mm (2 Inches)

Service lines larger than 2 inches shall be connected to the main by a tapped saddle, tapping sleeve and valve, service clamp or reducing tee, depending on the main diameter and the service line diameter, and shall have a gate valve. Lines 3 inches and larger may use rubber-seated butterfly valves as specified above, or gate valves.

3.1.7 [Enter Appropriate Subpart Title Here]3.1.7.1 Location of Valves

After delivery, valves, including those in hydrants, shall be drained to prevent freezing and shall have the interiors cleaned of all foreign matter before installation. Stuffing boxes shall be tightened and hydrants and valves shall be fully opened and fully closed to ensure that all parts are in working condition. Check, pressure reducing, vacuum, and air relief valves shall be installed in valve pits. Valves and valve boxes shall be installed where shown or specified, and shall be set plumb. Valve boxes shall be centered on the valves. Boxes shall be installed over each outside gate valve unless otherwise shown. Where feasible, valves shall be located outside the area of roads and streets. Earth fill shall be tamped around each valve box or pit to a distance of 4 feet on all sides of the box, or the undisturbed trench face if less than 4 feet.

3.1.7.2 Location of Service Boxes

Where water lines are located below paved streets having curbs, the boxes shall be installed directly back of the curbs. Where no curbing exists, service boxes shall be installed in accessible locations, beyond the limits of street surfacing, walks and driveways.

3.1.8 Tapped Tees and Crosses

Tapped tees and crosses for future connections shall be installed where

shown.

3.1.9 Thrust Restraint

Plugs, caps, tees and bends deflecting 11.25 degrees or more, either vertically or horizontally, on waterlines 4 inches in diameter or larger, and fire hydrants shall be provided with thrust restraints. Valves shall be securely anchored or shall be provided with thrust restraints to prevent movement. Thrust restraints shall be either thrust blocks or, for ductile-iron pipes, restrained joints.

3.1.9.1 Thrust Blocks

Thrust blocking shall be concrete of a mix not leaner than: 1 cement, 2-1/2 sand, 5 gravel; and having a compressive strength of not less than 2,000 psi after 28 days. Blocking shall be placed between solid ground and the hydrant or fitting to be anchored. Unless otherwise indicated or directed, the base and thrust bearing sides of thrust blocks shall be poured directly against undisturbed earth. The sides of thrust blocks not subject to thrust may be poured against forms. The area of bearing shall be as shown or as directed. Blocking shall be placed so that the fitting joints will be accessible for repair. Steel rods and clamps, protected by galvanizing or by coating with bituminous paint, shall be used to anchor vertical down bends into gravity thrust blocks. See Thrust Block Sizes Table, Fig 5-1, 5-2, 5-3, and 5-4 for more details.

3.1.9.2 Restrained Joints

For ductile-iron pipe, restrained joints shall be designed by the Contractor or the pipe manufacturer in accordance with DIPRA-Restraint Design.

3.2 HYDROSTATIC TESTS

Where any section of a water line is provided with concrete thrust blocking for fittings or hydrants, the hydrostatic tests shall not be made until at least 5 days after installation of the concrete thrust blocking, unless otherwise approved.

3.2.1 Pressure Test

After the pipe is laid, the joints completed, and the trench partially backfilled leaving the joints exposed for examination, the newly laid piping or any valved section of piping shall, unless otherwise specified, be subjected for 2 hour to a hydrostatic pressure test of 200 psi. Each valve shall be opened and closed several times during the test. Exposed pipe, joints, fittings, hydrants, and valves shall be carefully examined during the partially open trench test. Joints showing visible leakage shall be replaced or remade as necessary. Cracked or defective pipe, joints, fittings, hydrants and valves discovered in consequence of this pressure test shall be removed and replaced with sound material, and the test shall be repeated until the test results are satisfactory. The requirement for the joints to remain exposed for the hydrostatic tests may be waived by the Contracting Officer when one or more of the following conditions is encountered:

a. Wet or unstable soil conditions in the trench.

b. Compliance would require maintaining barricades and walkways

around and across an open trench in a heavily used area that would require continuous surveillance to assure safe conditions.

c. Maintaining the trench in an open condition would delay completion of the project.

The Contractor may request a waiver, setting forth in writing the reasons for the request and stating the alternative procedure proposed to comply with the required hydrostatic tests. Backfill placed prior to the tests shall be placed in accordance with the requirements of Section 02316A EXCAVATION, TRENCHING, AND BACKFILLING FOR UTILITIES SYSTEMS.

3.2.2 Leakage Test

Leakage test shall be conducted after the pressure tests have been satisfactorily completed. The duration of each leakage test shall be at least 2 hours, and during the test the water line shall be subjected to not less than 200 psi pressure. Leakage is defined as the quantity of water to be supplied into the newly laid pipe, or any valved or approved section, necessary to maintain pressure within 5 psi of the specified leakage test pressure after the pipe has been filled with water and the air expelled. Piping installation will not be accepted if leakage exceeds the allowable leakage which is determined by the following formula:

L = 0.0001351ND(P raised to 0.5 power)

L = Allowable leakage in gallons per hour
N = Number of joints in the length of pipeline tested
D = Nominal diameter of the pipe in inches
P = Average test pressure during the leakage test, in psi gauge

Should any test of pipe disclose leakage greater than that calculated by the above formula, the defective joints shall be located and repaired until the leakage is within the specified allowance, without additional cost to the Government.

3.2.3 Time for Making Test

Except for joint material setting or where concrete thrust blocks necessitate a 5-day delay, pipelines jointed with rubber gaskets, mechanical or push-on joints, or couplings may be subjected to hydrostatic pressure, inspected, and tested for leakage at any time after partial completion of backfill. Cement-mortar lined pipe may be filled with water as recommended by the manufacturer before being subjected to the pressure test and subsequent leakage test.

3.2.4 Concurrent Hydrostatic Tests

The Contractor may elect to conduct the hydrostatic tests using either or both of the following procedures. Regardless of the sequence of tests employed, the results of pressure tests, leakage tests, and disinfection shall be as specified. Replacement, repair or retesting required shall be accomplished by the Contractor at no additional cost to the Government.

a. Pressure test and leakage test may be conducted concurrently.

b. Hydrostatic tests and disinfection may be conducted concurrently, using the water treated for disinfection to accomplish the hydrostatic tests. If water is lost when treated for disinfection

and air is admitted to the unit being tested, or if any repair procedure results in contamination of the unit, disinfection shall be reaccomplished.

3.3 BACTERIAL DISINFECTION

3.3.1 Bacteriological Disinfection

Before acceptance of potable water operation, each unit of completed waterline shall be disinfected as prescribed by ANSI/AWWA C651. as specified. After pressure tests have been made, the unit to be disinfected shall be thoroughly flushed with water until all entrained dirt and mud have been removed before introducing the chlorinating material. The chlorinating material shall be either liquid chlorine, calcium hypochlorite, or sodium hypochlorite, conforming to paragraph MISCELLANEOUS ITEMS. The chlorinating material shall provide a dosage of not less than 50 ppm and shall be introduced into the water lines in an approved manner. Polyvinyl Chloride (PVC) pipe lines shall be chlorinated using only the above specified chlorinating material in solution. The agent shall not be introduced into the line in a dry solid state. The treated water shall be retained in the pipe long enough to destroy all non-spore forming bacteria. Except where a shorter period is approved, the retention time shall be at least 24 hours and not more than 48 hours and shall produce not less than 25 ppm of free chlorine residual throughout the line at the end of the retention period. Valves on the lines being disinfected shall be opened and closed several times during the contact period. The line shall then be flushed with clean water until the residual chlorine is reduced to less than 1.0 ppm. During the flushing period, each fire hydrant on the line shall be opened and closed several times. From several points in the unit, personnel from the Contractor's commercial laboratory shall take at least 3 water samples from different points, approved by the Contracting Officer, in proper sterilized containers and perform a bacterial examination in accordance with state approved methods. The commercial laboratory shall be certified by the state's approving authority for examination of potable water. The disinfection shall be repeated until tests indicate the absence of pollution for at least 2 full days. The unit will not be accepted until satisfactory bacteriological results have been obtained.

3.4 CLEANUP

Upon completion of the installation of water lines, and appurtenances, all debris and surplus materials resulting from the work shall be removed.

-- End of Section --

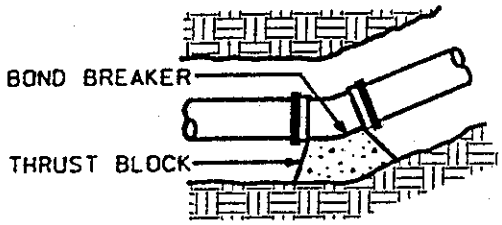

BEND (PLAN)

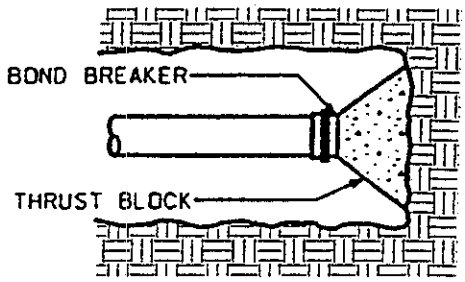

DEAD END (PLAN)

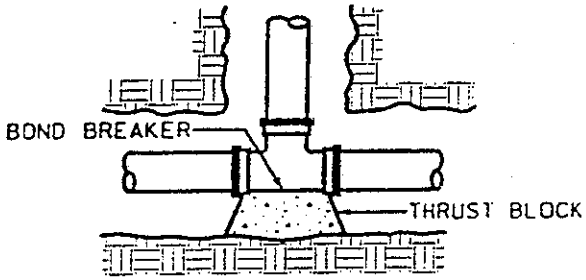

TEE (PLAN)

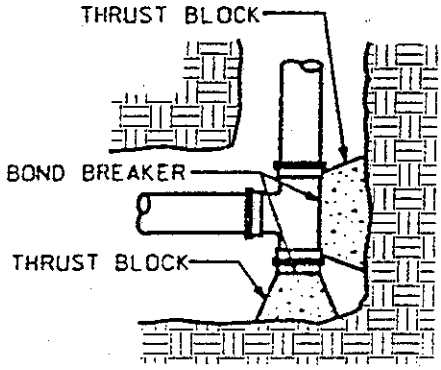

TEE (PLAN)

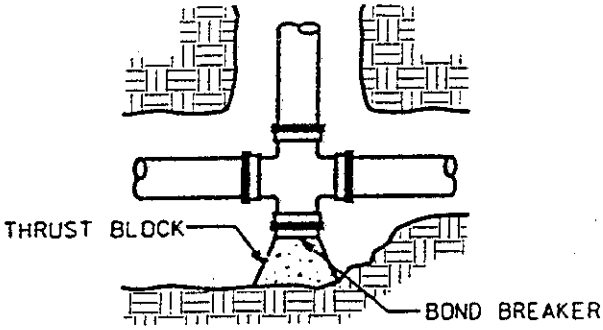

CROSS (PLAN)

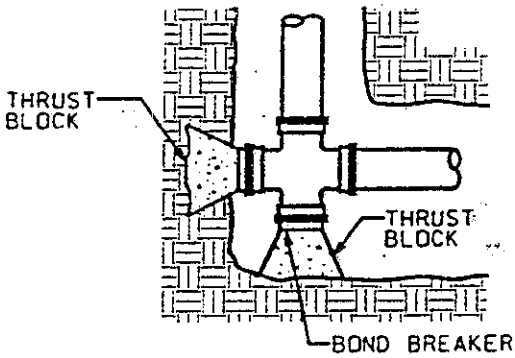

CROSS (PLAN)

CONCRETE THRUST BLOCK (5010.1A

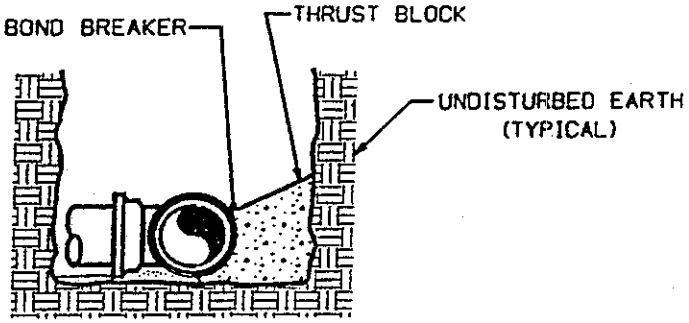

ELEVATION
(TYPICAL)

GENERAL NOTES FOR THRUST BLOCKS

1. RESTRAINED JOINTS MAY BE USED IN LIEU OF BLOCKING WITH PRIOR APPROVAL FROM JURISDICTION.
2. USE RESTRAINED JOINTS FOR DOWNWARD VERTICAL BENDS, WITH RETAINER GLANDS 40' EACH WAY.
3. MINIMUM THRUST BLOCK THICKNESS 1'-6".
4. EXTEND THRUST BLOCKS TO UNDISTURBED SOIL.
5. FORM VERTICAL SURFACES OF POURED CONCRETE THRUST BLOCKS EXCEPT ON THRUST FACE.
6. DO NOT ALLOW CONCRETE TO DIRECTLY CONTACT JOINTS OR FITTING BOLTS, PROTECT JOINTS AND BOLTS WITH POLYETHYLENE ENCASEMENT.

CONCRETE THRUST BLOCK

(5010.1B)
Modified
1) removed thrust block sizing table

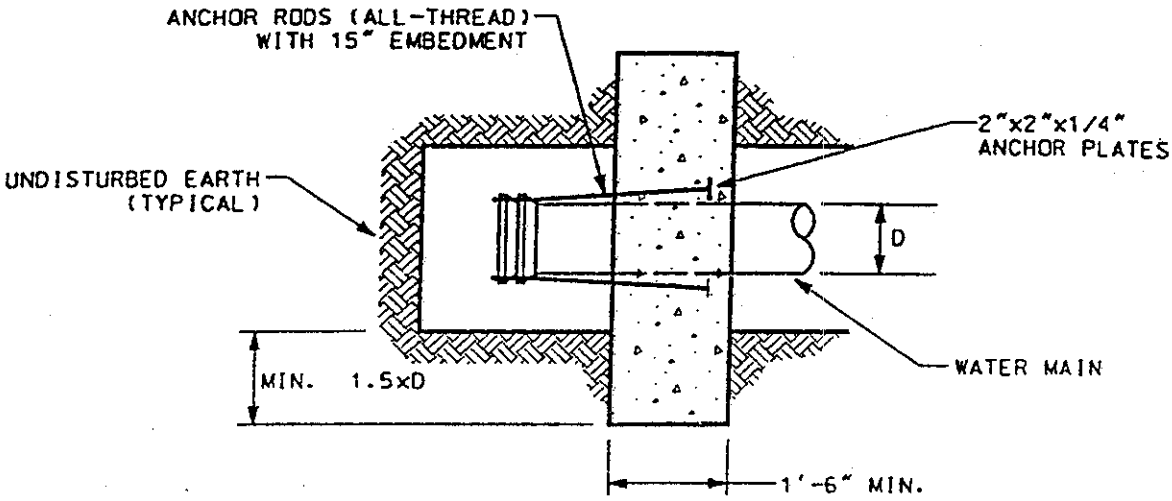

DEAD END (ALTERNATE)

ANCHOR BARS FOR DEAD END (ALTERNATE)	
PIPE DIA. (IN)	NUMBER OF NO. 6 BARS REQ'D
6	2
8	2
10	2
12	4
14	5
16	6
NOTE: FOR PIPE DIAMETERS GREATER THAN 16 INCHES CONSULT JURISDICTIONAL ENGINEER	

NOTES - DEAD END (ALTERNATE)

1. USE ALTERNATE THRUST BLOCK AT DEAD ENDS ONLY WHEN PERMITTED BY WATER WORKS.

2. COAT ANCHOR RODS WITH BITUMINOUS MASTIC AND APPLY POLYETHYLENE ENCASEMENT AFTER THRUST BLOCK INSTALLATION.

CONCRETE THRUST BLOCK (5010.1C)

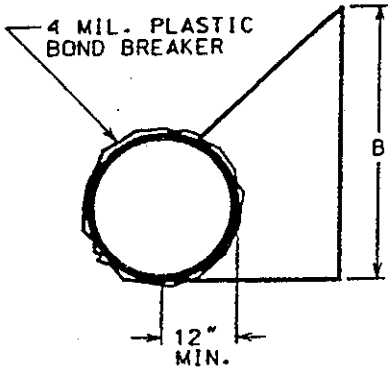

ELEVATION

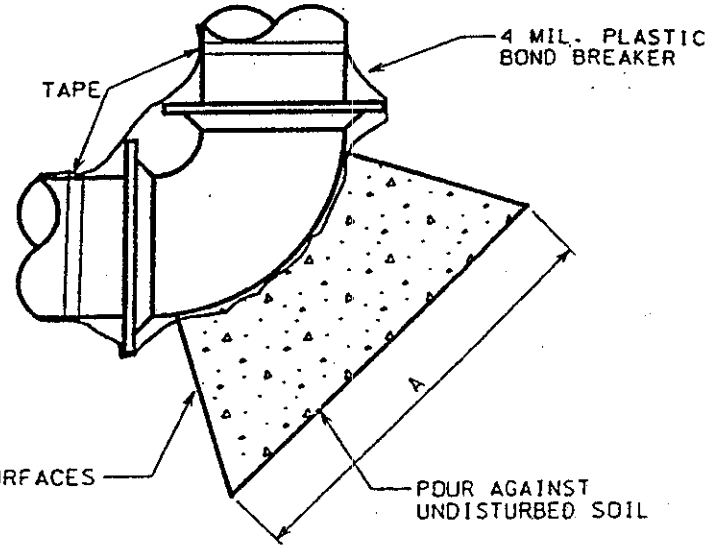

TYPICAL REACTION BLOCK

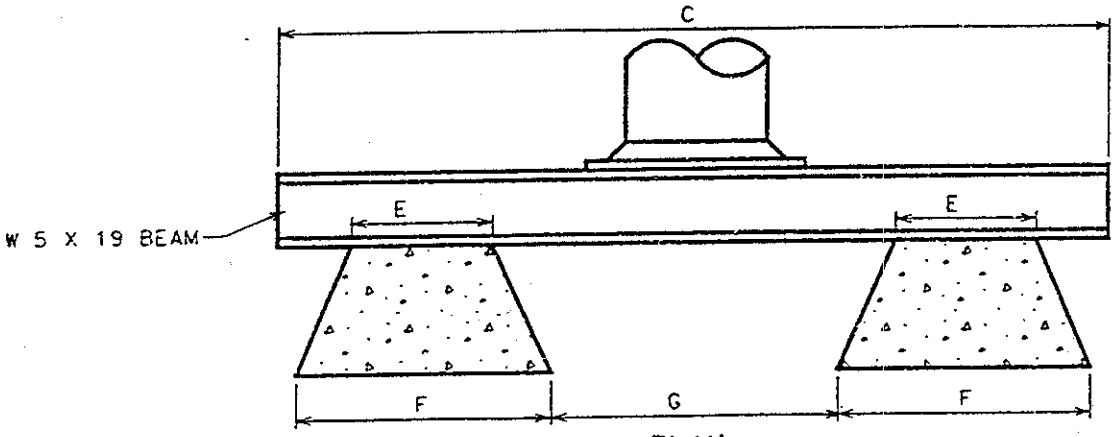

PLAN

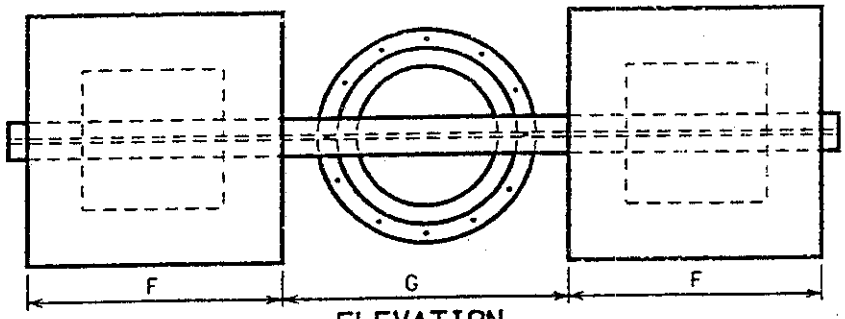

ELEVATION

TYPICAL END BLOCK ASSEMBLY

NOTE:

WRAP 4 MIL. PLASTIC AROUND PIPE & FITTINGS AT ALL LOCATIONS WHERE THEY WILL COME INTO CONTACT WITH CONCRETE.

SIZE	A	B	C	D	E	F	G	V-BAR
6"	1'-3"	1'-0"	3'-9"	4"	0'-9"	1'-0"	2'-0"	
8"	1'-9"	1'-3"	5'-0"	4"	0'-9"	1'-3"	2'-0"	
10"	2'-3"	1'-6"	5'-6"	6"	1'-0"	1'-6"	2'-0"	
12"	3'-3"	1'-9"	6'-6"	8"	1'-3"	1'-9"	2'-6"	
14"	4'-0"	2'-0"	7'-0"	8"	1'-6"	2'-0"	2'-6"	
16"	4'-6"	2'-3"	8'-0"	10"	1'-9"	2'-3"	3'-0"	
18"	5'-0"	2'-9"	10'-0"	10"	2'-3"	3'-0"	3'-3"	
24"	5'-6"	3'-6"	12'-0"	10"	2'-9"	4'-9"	3'-9"	6 @ 12"
30"	6'-0"	4'-0"	15'-0"	10"	3'-0"	6'-0"	4'-0"	6 @ 12"

MISCELLANEOUS THRUST BLOCK DETAILS
(Where Required)

(5010.1D)

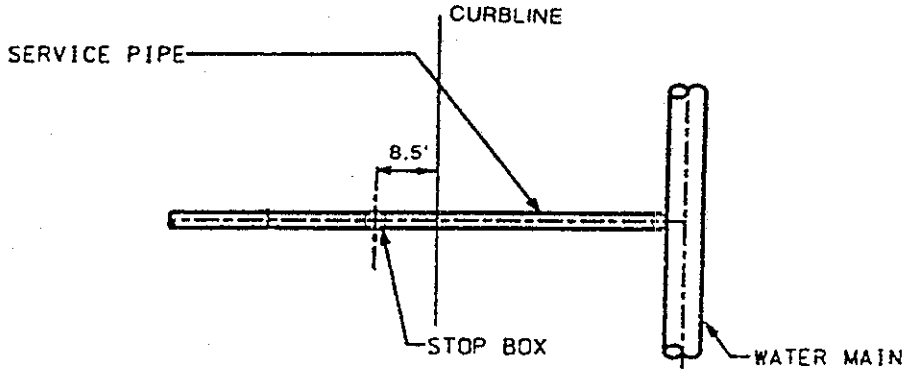

PLAN

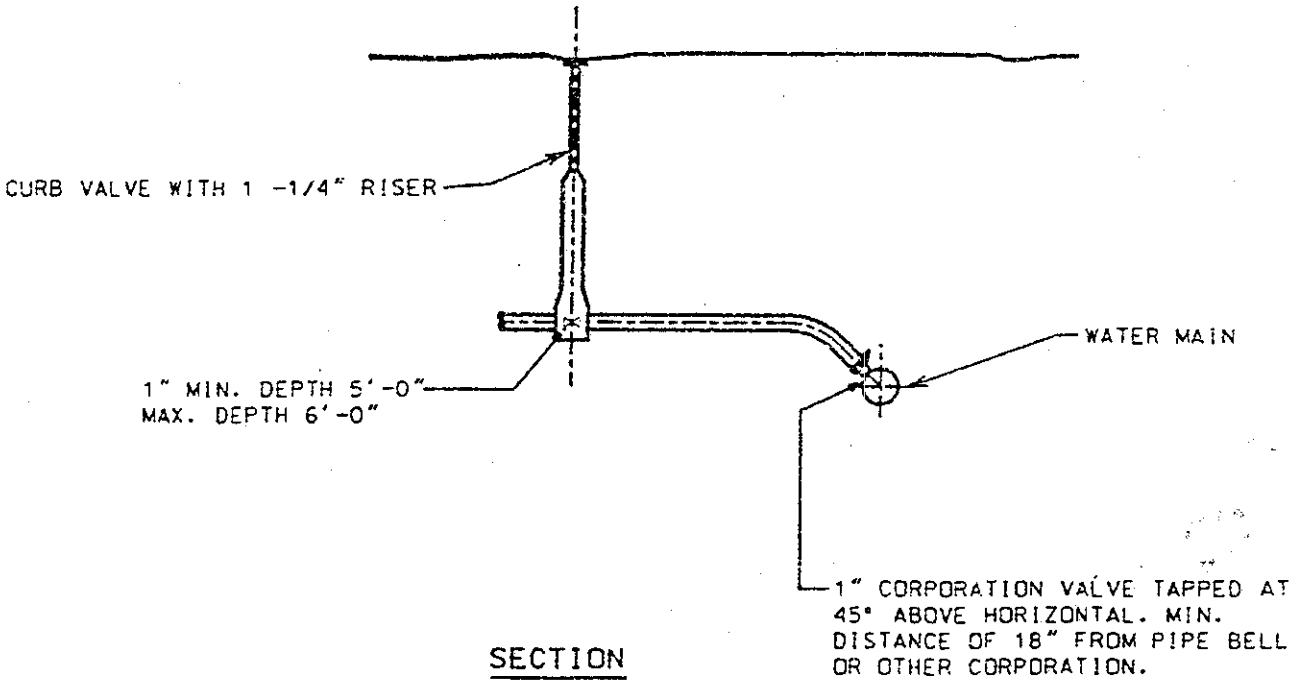

SECTION

NOTE: STOP BOX TO BE LOCATED 8.5 FEET BEHIND CURB LINE

1" SERVICE PIPE INSTALLATION

(3010.
Modified
1) removed insulator

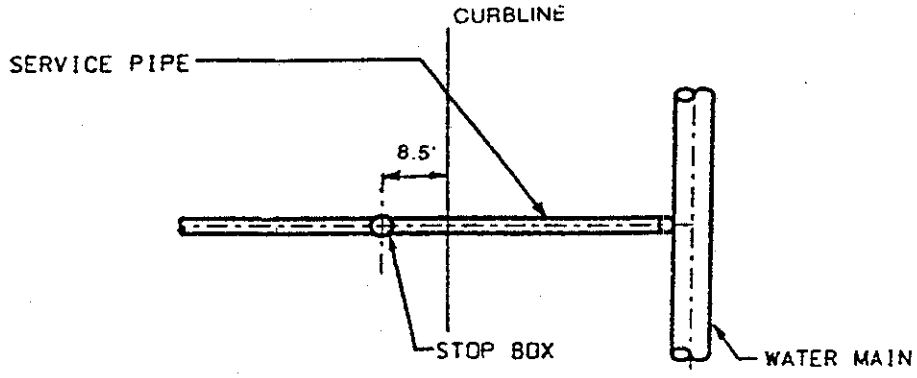

PLAN

NOTE: CONTACT JURISDICTION FOR INFORMATION ON SERVICES LARGER THAN 2-INCH.

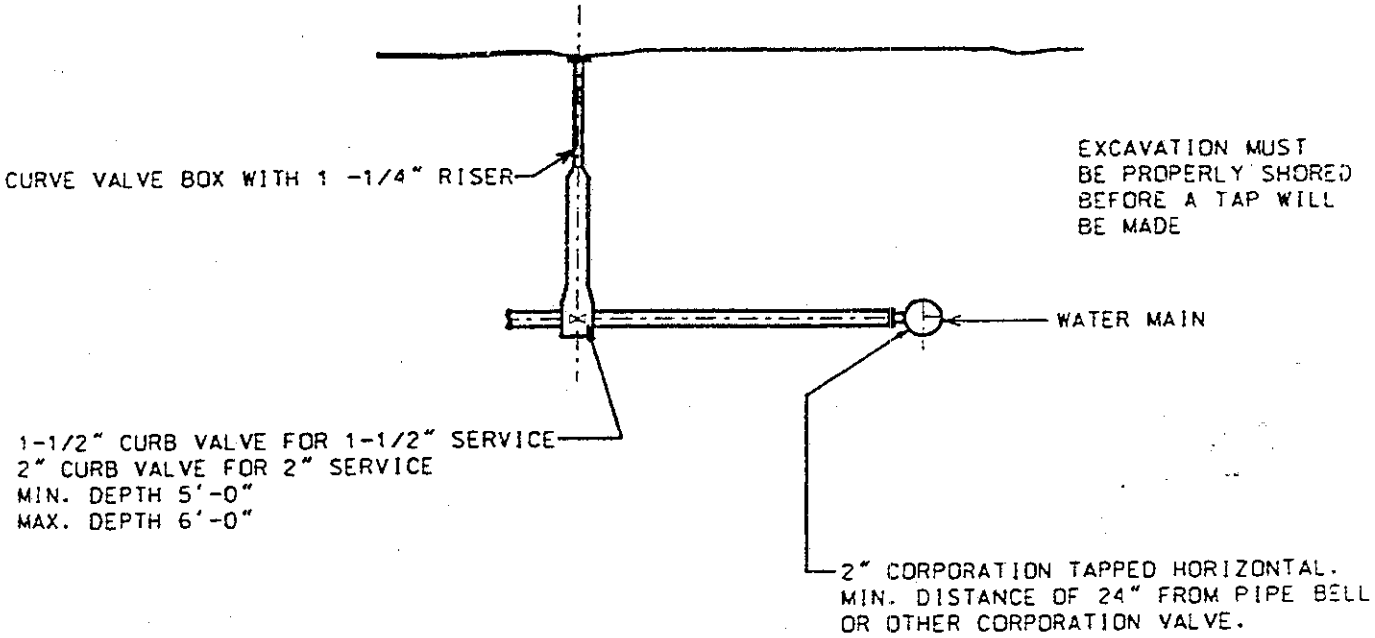

SECTION

NOTE: STOP BOX TO BE LOCATED 8.5 FEET BEHIND CURB LINE

(5010.3)
Modified
1) removed insulator

1-1/2" OR 2" SERVICE PIPE INSTALLATION

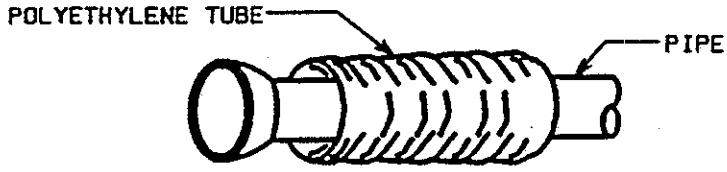

STEP 1

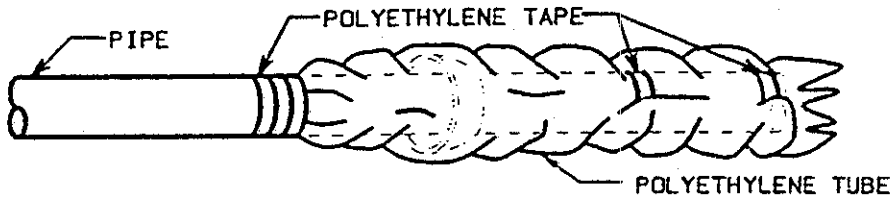

STEP 2

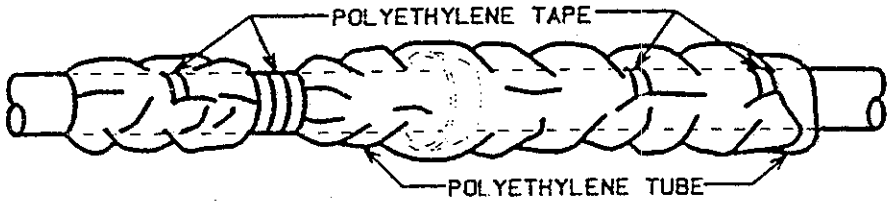

STEP 3

FIELD INSTALLATION - POLYETHYLENE WRAP

STEP 1 - PLACE TUBE OF POLYETHYLENE MATERIAL ON PIPE PRIOR TO LOWERING IT INTO THE TRENCH.

STEP 2 - PULL THE TUBE OVER THE LENGTH OF PIPE. TAPE TUBE TO PIPE AT JOINT. FOLD MATERIAL AROUND THE ADJACENT SPIGOT END AND WRAP WITH TAPE TO HOLD THE PLASTIC TUBE IN PLACE.

STEP 3 - OVERLAP FIRST TUBE WITH ADJACENT TUBE AND SECURE WITH PLASTIC ADHESIVE TAPE. THE POLYETHYLENE TUBE COVERING THE PIPE SHALL BE LOOSE. EXCESS MATERIAL SHALL BE NEATLY DRAWN UP AROUND THE PIPE BARREL, FOLDED ON TOP OF AND TAPED IN PLACE.

NOTES: IRON PIPE FITTINGS, INCLUDING VALVES, VALVE BOXES, AND HYDRANTS SHALL BE WRAPPED WITH POLYETHYLENE MATERIAL. THE WRAPPING SHALL EXTEND AT LEAST 1' BEYOND THE FITTING JOINTS ONTO THE ADJOINING PIPE AND SHALL BE FASTENED TO THE PIPE WITH PLASTIC TAPE. TAPE SHALL BE USED AS NEEDED TO HOLD WRAP IN PLACE. EITHER POLYETHYLENE SHEETS OR SLIT TUBING MAY BE USED.

POLYETHYLENE WRAP (5010.5)

Pipe Size (inches)	THRUST BLOCK SIZES (For 100 psi - Water Pressure) (Square Feet)			SOIL TYPE
	Tees (Dead End)	90° Elbow	45° Elbow	Shale - 6000 Clay - 2000 Sand - 3000
6	2.0	2.0	2.0	Shale
	3.0	4.0	3.0	Clay
	2.0	3.0	2.0	Sand
8	2.0	2.0	2.0	Shale
	4.0	6.0	3.0	Clay
	3.0	4.0	2.0	Sand
10	2.0	3.0	2.0	Shale
	6.0	9.0	5.0	Clay
	4.0	6.0	4.0	Sand
12	3.0	4.0	3.0	Shale
	9.0	12.0	7.0	Clay
	6.0	8.0	5.0	Sand
16	5.0	7.0	4.0	Shale
	15.0	21.0	12.0	Clay
	10.0	14.0	8.0	Sand
24	11.0	16.0	9.0	Shale
	33.0	48.0	27.0	Clay
	22.0	32.0	18.0	Sand
30	17.0	25.0	14.0	Shale
	51.0	75.1	42.0	Clay
	34.0	50.0	28.0	Sand
For 150 PSI: Use 1.5 x Area			For 200 PSI: Use 2 x Area	

2. Refer to detailed drawings for dimensions and installation of thrust blocks. See Figures 5-1, 5-2 and 5-3.

2.06 PIPELINE ACCESSORIES

A. **Polyethylene wrap:**
1. Utilize: on all ductile iron pipe and fittings in buried service.
2. Conform to ANSI/AWWA C105/A21.5.
3. Minimum thickness: 8 mil.

B. **Tracer system:**
1. Tracer wire: #12 solid single strand, type TW or THHN.
2. Ground rod: 3/8 inch dia., 60 inch long steel rod uniformly coated with metallically bonded electrolytic copper.
3. Ground-rod clamp: high strength, corrosion resistant copper alloy.
4. Splice kit: buried service wire splice.

SECTION TABLE OF CONTENTS

DIVISION 02 - SITE WORK

SECTION 02530N

SANITARY SEWERAGE

09/99

PART 1 GENERAL

1.1 REFERENCES
1.2 SYSTEM DESCRIPTION
1.2.1 Sanitary Sewer Gravity Pipeline
1.3 SUBMITTALS
1.4 DELIVERY, STORAGE, AND HANDLING
1.4.1 Delivery and Storage
1.4.1.1 Piping
1.4.1.2 Metal Items
1.4.1.3 Cement, Aggregate, and Reinforcement
1.4.2 Handling

PART 2 PRODUCTS

2.1 PIPELINE MATERIALS
2.1.1 Vitrified Clay Piping
2.1.1.1 Vitrified Clay Pipe and Fittings
2.1.1.2 Vitrified Clay Piping Jointing Materials
2.1.2 Ductile Iron Gravity Sewer Pipe and Associated Fittings
2.1.2.1 Ductile Iron Gravity Pipe and Fittings
2.1.2.2 Ductile Iron Gravity Joints and Jointing Materials
2.1.3 PVC Plastic Gravity Sewer Piping
2.1.3.1 PVC Plastic Gravity Pipe and Fittings
2.1.3.2 PVC Plastic Gravity Joints and Jointing Material
2.2 CONCRETE MATERIALS
2.3 MISCELLANEOUS MATERIALS
2.3.1 Precast Concrete and Associated Materials
2.3.1.1 Precast Concrete Manhole Sections
2.3.1.2 Gaskets and Connectors
2.3.1.3 External Preformed Rubber Joint Seals
2.3.2 Metal Items
2.3.2.1 Frames, Covers, and Gratings for Manholes
2.3.2.2 Manhole Steps

PART 3 EXECUTION

3.1 INSTALLATION OF PIPELINES AND APPURTENANT CONSTRUCTION
3.1.1 General Requirements for Installation of Pipelines
3.1.1.1 Location
3.1.1.2 Earthwork
3.1.1.3 Pipe Laying and Jointing
3.1.1.4 Connections to Existing Lines
3.1.2 Special Requirements
3.1.2.1 Installation of Vitrified Clay Piping
3.1.2.2 Installation of Ductile Iron Gravity Sewer Pipe

3.1.2.3 Installation of PVC Plastic Piping
3.1.2.4 Cleanouts
3.1.3 Concrete Work
3.1.4 Manhole Construction
3.1.5 Miscellaneous Construction and Installation
3.1.5.1 Metal Work
3.2 FIELD QUALITY CONTROL
3.2.1 Field Tests and Inspections
3.2.2 Tests for Nonpressure Lines
3.2.2.1 Leakage Tests
3.2.2.2 Deflection Testing
3.2.3 Field Tests for Concrete

-- End of Section Table of Contents --

SECTION 02530N

SANITARY SEWERAGE
09/99

ATTACHMENTS: FIG. 6-1, 6-2 & 6-4 INCLUDED

PART 1 GENERAL

1.1 REFERENCES

The publications listed below form a part of this specification to the extent referenced. The publications are referred to in the text by the basic designation only.

AMERICAN SOCIETY FOR TESTING AND MATERIALS (ASTM)

ASTM C 12	(1995) Installing Vitrified Clay Pipe Lines
ASTM C 425	(1997) Compression Joints for Vitrified Clay Pipe and Fittings
ASTM C 443	(1994) Joints for Circular Concrete Sewer and Culvert Pipe, Using Rubber Gaskets
ASTM C 478	(1997) Precast Reinforced Concrete Manhole Sections
ASTM C 700	(1997) Vitrified Clay Pipe, Extra Strength, Standard Strength, and Perforated
ASTM C 828	(1990) Low-Pressure Air Test of Vitrified Clay Pipe Lines
ASTM C 923	(1996) Resilient Connectors Between Reinforced Concrete Manhole Structures, Pipes and Laterals
ASTM C 924	(1989) Concrete Pipe Sewer Lines by Low-Pressure Air Test Method
ASTM C 969	(1994) Infiltration and Exfiltration Acceptance Testing of Installed Precast Concrete Pipe Sewer Lines
ASTM C 972	(1995) Compression-Recovery of Tape Sealant
ASTM C 990	(1996) Joints for Concrete Pipe, Manholes, and Precast Box Sections Using Preformed Flexible Joint Sealants
ASTM D 412	(1997) Vulcanized Rubber and Thermoplastic Rubbers and Thermoplastic Elastomers - Tension
ASTM D 624	(1991) Tear Strength of Conventional Vulcanized Rubber and Thermoplastic Elastomers

ASTM D 2321	(1989; R 1995) Underground Installation of Thermoplastic Pipe for Sewers and Other Gravity-Flow Applications
ASTM D 2412	(1996; Rev. A) Determination of External Loading Characteristics of Plastic Pipe by Parallel-Plate Loading
ASTM D 3034	(1997) Type PSM Poly(Vinyl Chloride) (PVC) Sewer Pipe and Fittings
ASTM D 3212	(1996; Rev. A) Joints for Drain and Sewer Plastic Pipe Using Flexible Elastomeric Seals
ASTM D 4101	(1996; Rev. A) Propylene Plastic Injection and Extrusion Materials
ASTM F 477	(1996; Rev. A) Elastomeric Seals (Gaskets) for Joining Plastic Pipe
ASTM F 949	(1996; Rev. A) Poly(Vinyl Chloride) (PVC) Corrugated Sewer Pipe with a Smooth Interior and Fittings

AMERICAN WATER WORKS ASSOCIATION (AWWA)

AWWA C104/A21.4	(1995) Cement-Mortar Lining for Ductile-Iron Pipe and Fittings for Water
AWWA C105/A21.5	(1993) Polyethylene Encasement for Ductile - Iron Pipe Systems
AWWA C111/A21.11	(1995) Rubber-Gasket Joints for Ductile-Iron Pressure Pipe and Fittings
AWWA C600	(1993) Installation of Ductile-Iron Water Mains and Their Appurtenances

U.S. NATIONAL ARCHIVES AND RECORDS ADMINISTRATION (NARA)

29 CFR 1910.27	Fixed Ladders

U.S. GENERAL SERVICES ADMINISTRATION (GSA)

CID A-A-60005	(1988) Frames.Covers, Gratings, Steps, Sump and Catch Basin, Manhole

UNI-BELL PVC PIPE ASSOCIATION (UBPPA)

UBPPA UNI-B-6	(1990) Low-Pressure Air Testing of Installed Sewer Pipe

1.2 SYSTEM DESCRIPTION

1.2.1 Sanitary Sewer Gravity Pipeline

Provide mains 6 inch - 8 inch lines of vitrified clay pipe, ductile-iron

pipe, or polyvinyl chloride (PVC) plastic pipe.

1.3 SUBMITTALS

Submit the following in accordance with Section 01330, "Submittal Procedures."

SD-02 Shop Drawings

Precast concrete manhole

Metal items

Frames, covers, and gratings

SD-03 Product Data

Pipeline materials including joints, fittings, and couplings

Submit manufacturer's standard drawings or catalog cuts.

1.4 DELIVERY, STORAGE, AND HANDLING

1.4.1 Delivery and Storage

1.4.1.1 Piping

Inspect materials delivered to site for damage; store with minimum of handling. Store materials on site in enclosures or under protective coverings. Store plastic piping and jointing materials and rubber gaskets under cover out of direct sunlight. Do not store materials directly on the ground. Keep inside of pipes and fittings free of dirt and debris.

1.4.1.2 Metal Items

Check upon arrival; identify and segregate as to types, functions, and sizes. Store off the ground in a manner affording easy accessibility and not causing excessive rusting or coating with grease or other objectionable materials.

1.4.1.3 Cement, Aggregate, and Reinforcement

As specified in Section 03301, "Cast-In-Place StructuralConcrete."

1.4.2 Handling

Handle pipe, fittings, and other accessories in such manner as to ensure delivery to the trench in sound undamaged condition. Carry, do not drag, pipe to trench.

PART 2 PRODUCTS

2.1 PIPELINE MATERIALS

2.1.1 Vitrified Clay Piping

2.1.1.1 Vitrified Clay Pipe and Fittings

ASTM C 700, standard strength, extra strength.

2.1.1.2 Vitrified Clay Piping Jointing Materials

ASTM C 425.

2.1.2 Ductile Iron Gravity Sewer Pipe and Associated Fittings

2.1.2.1 Ductile Iron Gravity Pipe and Fittings

Ductile iron pipe shall conform to AWWA C151/ANSI A21.4, ANSI 21.51. Fittings shall conform to AWWA C111/ANSI A21.10. Fittings with push-on joint ends shall conform to AWWA C111/ANSI A21.11. Fittings shall have strength at least equivalent to that of the pipe. Ends of pipe and fittings shall be suitable for the joints specified hereinafter. Pipe and fittings shall have cement-mortar lining conforming to AWWA C104/A21.4, standard thickness.

2.1.2.2 Ductile Iron Gravity Joints and Jointing Materials

Pipe and fittings shall have push-on joints or mechanical joints, except as otherwise specified in this paragraph. Mechanical joints only shall be used where indicated. Mechanical joint requirements for pipe ends, glands, bolts and nuts, and gaskets shall conform to AWWA C111/A21.11.

2.1.3 PVC Plastic Gravity Sewer Piping

2.1.3.1 PVC Plastic Gravity Pipe and Fittings

ASTM D 3034, pipe stiffness per ASTM D2412, minimum thickness solid wall pipe SDR 23.5, 26, 35, or ASTM F 949 with ends suitable for elastomeric gasket joints.

2.1.3.2 PVC Plastic Gravity Joints and Jointing Material

Joints shall conform to ASTM D 3212. Gaskets shall conform to ASTM F 477.

2.2 CONCRETE MATERIALS

Concrete materials shall be as specified in Section 03301, "Cast-In-Place Structural Concrete."

2.3 MISCELLANEOUS MATERIALS

2.3.1 Precast Concrete and Associated Materials

2.3.1.1 Precast Concrete Manhole Sections

Precast concrete manhole risers, base sections, and tops shall conform to ASTM C 478. Base and first riser shall be monolithic.

2.3.1.2 Gaskets and Connectors

Gaskets for joints between manhole sections shall conform to ASTM C 443. Resilient connectors for making joints between manhole and pipes entering manhole shall conform to ASTM C 923 or ASTM C 990.

2.3.1.3 External Preformed Rubber Joint Seals

An external preformed rubber joint seal shall be an accepted method of

sealing cast iron covers to precast concrete sections to prevent ground water infiltration into sewer systems. All finished and sealed manholes constructed in accordance with paragraph entitled "Manhole Construction" shall be tested for leakage in the same manner as pipelines as described in paragraph entitled "Leakage Tests." The seal shall be multi-section with a neoprene rubber top section and all lower sections made of Ethylene Proplene Di Monomer (EPDM) rubber with a minimum thickness of 60 mils. Each unit shall consist of a top and bottom section and shall have mastic on the bottom of the bottom section and mastic on the top and bottom of the top section. The mastic shall be a non-hardening butyl rubber sealant and shall seal to the cone/top slab of the manhole/catch basin and over the lip of the casting. Extension sections shall cover up to two more adjusting rings. Properties and valves are listed in the following tables:

Properties, Test Methods and Minimum Values for
Rubber used in Preformed Joint Seals

Physical Properties	Test Methods	EPDM	Neoprene	Butyl mastic
Tensile, psi	ASTM D 412	1840	2195	-
Elogation percent	ASTM D 412	553	295	350
Tear Resistance, ppi	ASTM D 624 (Die B)	280	160	-
Rebound, percent, 5 minutes	ASTM C 972 (mod.)	-	-	11
Rebound, percent, 2 hours	ASTM C 972	-	-	12

2.3.2 Metal Items

2.3.2.1 Frames, Covers, and Gratings for Manholes

CID A-A-60005, cast iron; figure numbers shall be as indicated:

a. Traffic manhole: Provide in paved areas.

Frame: Figure 1, Size 22A
Cover: Figure 8, Size 22A
Steps: Figure 19

b. Non-traffic manhole:

Frame: Figure 4, Size 22
Cover: Figure 12, Size 22
Steps: Figure 19
or See Fig 6-1, 6-2, and 6-4 provide.

2.3.2.2 Manhole Steps

as indicated conforming to 29 CFR 1910.27. As an option, plastic or rubber coating pressure-molded to the steel may be used. Plastic coating shall conform to ASTM D 4101, copolymer polypropylene. Rubber shall conform to ASTM C 443, except shore A durometer hardness shall be 70 plus or minus 5. Aluminum steps or rungs will not be permitted. Steps are not required in manholes less than 4 feet deep.

PART 3 EXECUTION

3.1 INSTALLATION OF PIPELINES AND APPURTENANT CONSTRUCTION

3.1.1 General Requirements for Installation of Pipelines

Apply except where specific exception is made in the following paragraphs entitled "Special Requirements."

3.1.1.1 Location

The work covered by this section shall terminate at a point approximately 5 feet from the building . Where the location of the sewer is not clearly defined by dimensions on the drawings, do not lay sewer line closer horizontally than 10 feet to a water main or service line. Install pressure sewer lines beneath water lines only, with the top of the sewer line being at least 2 feet below bottom of water line. Where sanitary sewer lines pass above water lines, encase sewer in concrete for a distance of 10 feet on each side of the crossing, or substitute rubber-gasketed pressure pipe for the pipe being used for the same distance. Where sanitary sewer lines pass below water lines, lay pipe so that no joint in the sewer line will be closer than 3 feet, horizontal distance, to the water line.

a. Sanitary piping installation parallel with water line:

(1) Normal conditions: Sanitary piping or manholes shall be laid at least 10 feet horizontally from a water line whenever possible. The distance shall be measured edge-to-edge.

(2) Unusual conditions: When local conditions prevent a horizontal separation of 10 feet, the sanitary piping or manhole may be laid closer to a water line provided that:

(a) The top (crown) of the sanitary piping shall be at least 18 inches below the bottom (invert) of the water main.

(b) Where this vertical separation cannot be obtained, the sanitary piping shall be constructed of AWWA-approved ductile iron water pipe pressure tested in place without leakage prior to backfilling.

(c) The sewer manhole shall be of watertight construction and tested in place.

b. Installation of sanitary piping crossing a water line:

(1) Normal conditions: Lay sanitary piping crossing water lines to provide a separation of at least 18 inches between the top of the sanitary piping and the bottom of the water line whenever possible.

(2) Unusual conditions: When local conditions prevent a vertical separation described above, use the following construction:

(a) Sanitary piping passing over or under water lines shall be constructed of AWWA-approved ductile iron water pipe, pressure tested in place without leakage prior to backfilling.

(b) Sanitary piping passing over water lines shall, in addition, be protected by providing:

1. A vertical separation of at least 18 inches between the bottom of the sanitary piping and the top of the water line.

2. Adequate structural support for the sanitary piping to prevent excessive deflection of the joints and the settling on and breaking of the water line.

3. That the length, minimum 20 feet, of the sanitary piping be centered at the point of the crossing so that joints shall be equidistant and as far as possible from the water line.

c. Sanitary sewer manholes: No water piping shall pass through or come in contact with any part of a sanitary sewer manhole.

3.1.1.2 Earthwork

Perform earthwork operations in accordance with Section 02316A, "Excavation, Trenching, and Backfilling for Utilities Systems."

3.1.1.3 Pipe Laying and Jointing

Inspect each pipe and fitting before and after installation; replace those found defective and remove from site. Provide proper facilities for lowering sections of pipe into trenches. Lay nonpressure pipe with the bell or groove ends in the upgrade direction. Adjust spigots in bells and tongues in grooves to give a uniform space all around. Blocking or wedging between bells and spigots or tongues and grooves will not be permitted. Replace by one of the proper dimensions, pipe or fittings that do not allow sufficient space for installation of joint material. At the end of each work day, close open ends of pipe temporarily with wood blocks or bulkheads. Provide batterboards not more than 25 feet apart in trenches for checking and ensuring that pipe invert elevations are as indicated. Laser beam method may be used in lieu of batterboards for the same purpose.

3.1.1.4 Connections to Existing Lines

Obtain approval from the Contracting Officer before making connection to existing line. Conduct work so that there is minimum interruption of service on existing line.

3.1.2 Special Requirements

3.1.2.1 Installation of Vitrified Clay Piping

Install pipe and fittings in accordance with paragraph entitled "General Requirements for Installation of Pipelines" of this section and with the requirements of ASTM C 12 for pipe laying. Make joints with a compression joint material specified for clay pipe joints and assemble in accordance with the recommendations of the manufacturer of the pipe.

3.1.2.2 Installation of Ductile Iron Gravity Sewer Pipe

Unless otherwise specified, install pipe and associated fittings in accordance with paragraph entitled "General Requirements for Installation of Pipelines" of this section and with the requirements of AWWA C600 for pipe installation and joint assembly.

a. Make push-on joints with the gaskets and lubricant specified for this type joint and assemble in accordance with the applicable requirements of AWWA C600 for joint assembly. Make mechanical-joints with the gaskets, glands, bolts, and nuts specified for this type joint and assemble in accordance with the applicable requirements of AWWA C600 for joint assembly and the recommendations of Appendix A to AWWA C111/A21.11.

b. Exterior protection: Completely encase buried ductile iron pipelines with polyethylene tube or sheet in accordance with AWWA C105/A21.5, using Class A polyethylene film.

3.1.2.3 Installation of PVC Plastic Piping

Install pipe and fittings in accordance with paragraph entitled "General Requirements for Installation of Pipelines" of this section and with the requirements of ASTM D 2321 for laying and joining pipe and fittings. Make joints with the gaskets specified for joints with this piping and assemble in accordance with the requirements of ASTM D 2321 for assembly of joints. Make joints to other pipe materials in accordance with the recommendations of the plastic pipe manufacturer.

3.1.2.4 Cleanouts

Construct cleanouts of cast iron soil pipe and fittings.

3.1.3 Concrete Work

Cast-in-place concrete is included in Section 03301, "Cast-In-Place Structural Concrete."

3.1.4 Manhole Construction

Construct base slab of cast-in-place concrete or use precast concrete base sections. Make inverts in cast-in-place concrete and precast concrete bases with a smooth-surfaced semi-circular bottom conforming to the inside contour of the adjacent sewer sections. For changes in direction of the sewer and entering branches into the manhole, make a circular curve in the manhole invert of as large a radius as manhole size will permit. For cast-in-place concrete construction, either pour bottom slabs and walls integrally or key and bond walls to bottom slab. No parging will be permitted on interior manhole walls. For precast concrete construction, make joints between manhole sections with the gaskets specified for this purpose; install in the manner specified for installing joints in concrete piping. Parging will not be required for precast concrete manholes. Cast-in-place concrete work shall be in accordance with the requirements specified under paragraph entitled "Concrete Work" of this section. Make joints between concrete manholes and pipes entering manholes with the resilient connectors specified for this purpose; install in accordance with the recommendations of the connector manufacturer. Where a new manhole is constructed on an existing line, remove existing pipe as necessary to construct the manhole. Cut existing pipe so that pipe ends are approximately flush with the interior face of manhole wall, but not protruding into the manhole. Use resilient connectors as previously specified for pipe connectors to concrete manholes.

3.1.5 Miscellaneous Construction and Installation

3.1.5.1 Metal Work

a. Workmanship and finish: Perform metal work so that workmanship and finish will be equal to the best practice in modern structural shops and foundries. Form iron to shape and size with sharp lines and angles. Do shearing and punching so that clean true lines and surfaces are produced. Make castings sound and free from warp, cold shuts, and blow holes that may impair their strength or appearance. Give exposed surfaces a smooth finish with sharp well-defined lines and arises. Provide necessary rabbets, lugs, and brackets wherever necessary for fitting and support.

b. Field painting: After installation, clean cast-iron frames, covers, gratings, and steps not buried in concrete to bare metal of mortar, rust, grease, dirt, and other deleterious materials and apply a coat of bituminous paint. Do not paint surfaces subject to abrasion.

3.2 FIELD QUALITY CONTROL

3.2.1 Field Tests and Inspections

The Contracting Officer will conduct field inspections and witness field tests specified in this section. The Contractor shall perform field tests and provide labor, equipment, and incidentals required for testing. Be able to produce evidence, when required, that each item of work has been constructed in accordance with the drawings and specifications.

3.2.2 Tests for Nonpressure Lines

Check each straight run of pipeline for gross deficiencies by holding a light in a manhole; it shall show a practically full circle of light through the pipeline when viewed from the adjoining end of line. When pressure piping is used in a nonpressure line for nonpressure use, test this piping as specified for nonpressure pipe.

3.2.2.1 Leakage Tests

Test lines for leakage by either infiltration tests or exfiltration tests, or by low-pressure air tests. Prior to testing for leakage, backfill trench up to at least lower half of pipe. When necessary to prevent pipeline movement during testing, place additional backfill around pipe sufficient to prevent movement, but leaving joints uncovered to permit inspection. When leakage or pressure drop exceeds the allowable amount specified, make satisfactory correction and retest pipeline section in the same manner. Correct visible leaks regardless of leakage test results.

a. Infiltration tests and exfiltration tests: Perform these tests for sewer lines made of the specified materials, not only concrete, in accordance with ASTM C 969. Make calculations in accordance with the Appendix to ASTM C 969.

b. Low-pressure air tests: Perform tests as follows:

(1) Vitrified Clay pipelines: Test in accordance with ASTM C 828. Allowable pressure drop shall be as given in ASTM C 828. Make calculations in accordance with the Appendix to ASTM C 828.

(3) Ductile-iron pipelines: Test in accordance with the

applicable requirements of ASTM C 924. Allowable pressure drop shall be as given in ASTM C 924. Make calculations in accordance with the Appendix to ASTM C 924.

(5) PVC plastic pipelines: Test in accordance with UBPPA UNI-B-6. Allowable pressure drop shall be as given in UBPPA UNI-B-6. Make calculations in accordance with the Appendix to UBPPA UNI-B-6.

3.2.2.2 Deflection Testing

Perform a deflection test on entire length of installed plastic pipeline on completion of work adjacent to and over the pipeline, including leakage tests, backfilling, placement of fill, grading, paving, concreting, and any other superimposed loads determined in accordance with ASTM D 2412. Deflection of pipe in the installed pipeline under external loads shall not exceed 4.5 percent of the average inside diameter of pipe. Determine whether the allowable deflection has been exceeded by use of a pull-through device or a deflection measuring device.

a. Pull-through device: This device shall be a spherical, spheroidal, or elliptical ball, a cylinder, or circular sections fused to a common shaft. Circular sections shall be so spaced on the shaft that distance from external faces of front and back sections will equal or exceed diameter of the circular section. Pull-through device may also be of a design promulgated by the Uni-Bell Plastic Pipe Association, provided the device meets the applicable requirements specified in this paragraph, including those for diameter of the device, and that the mandrel has a minimum of 9 arms. Ball, cylinder, or circular sections shall conform to the following:

(1) A diameter, or minor diameter as applicable, of 95 percent of the average inside diameter of the pipe; tolerance of plus 0.5 percent will be permitted.

(2) Homogeneous material throughout, shall have a density greater than 1.0 as related to water at 39.2 degrees F, and shall have a surface Brinell hardness of not less than 150.

(3) Center bored and through-bolted with a 1/4 inch minimum diameter steel shaft having a yield strength of not less than 70,000 pounds per square inch, with eyes or loops at each end for attaching pulling cables.

(4) Each eye or loop shall be suitably backed with a flange or heavy washer such that a pull exerted on opposite end of shaft will produce compression throughout remote end.

b. Deflection measuring device: Sensitive to 1.0 percent of the diameter of the pipe being tested and shall be accurate to 1.0 percent of the indicated dimension. Deflection measuring device shall be approved prior to use.

c. Pull-through device procedure: Pass the pull-through device through each run of pipe, either by pulling it through or flushing it through with water. If the device fails to pass freely through a pipe run, replace pipe which has the excessive deflection and completely retest in same manner and under same conditions.

d. Deflection measuring device procedure: Measure deflections through each run of installed pipe. If deflection readings in excess of 4.5 percent of average inside diameter of pipe are obtained, retest pipe by a run from the opposite direction. If retest continues to show a deflection in excess of 4.5 percent of average inside diameter of pipe, replace pipe which has excessive deflection and completely retest in same manner and under same conditions.

3.2.3 Field Tests for Concrete

Field testing requirements are covered in Section 03301, "Cast-In-Place Structural Concrete."

-- End of Section --

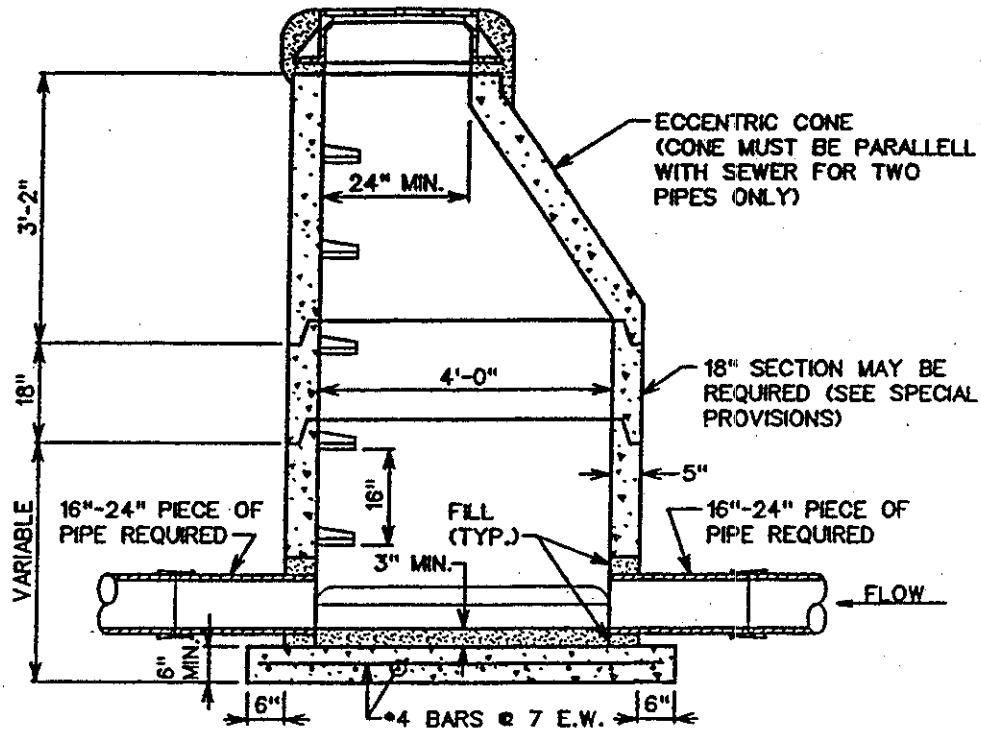

TYPICAL SECTION - STANDARD PRECAST
REINFORCED CONCRETE MANHOLE

NOTES
1. REINFORCED CONCRETE PIPE SECTIONS CONFORMING TO ASTM C476 72A, CLASS II
2. ECCENTRIC CONE IS REQUIRED FOR MANHOLES WITH 2 PIPES ENTERING
3. CONCENTRIC CONE IS REQUIRED FOR MANHOLES WITH 3 OR MORE PIPES ENTERING
4. ALL PRECAST MANHOLES MUST BE LINED WITH 2 COATS OF HI-BUILD EPOXOLINE LINER OR EQUAL (SEE STANDARD SPECIFICATIONS FOR DETAILS)

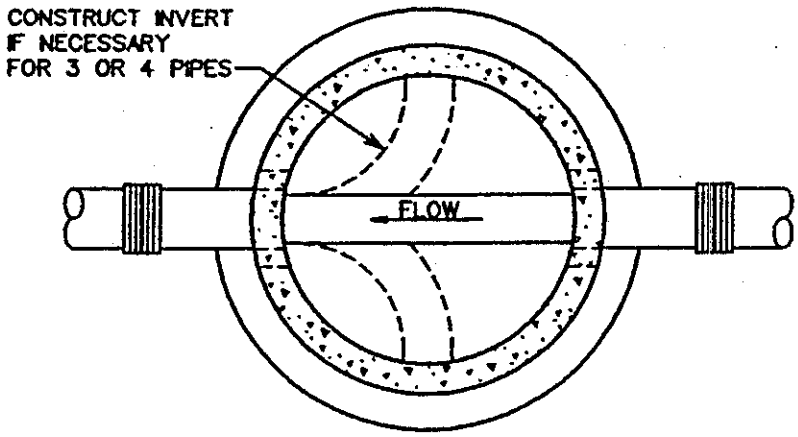

TYPICAL SECTION - SHOWING
BOTTOM OF MANHOLE

SANITARY MANHOLE

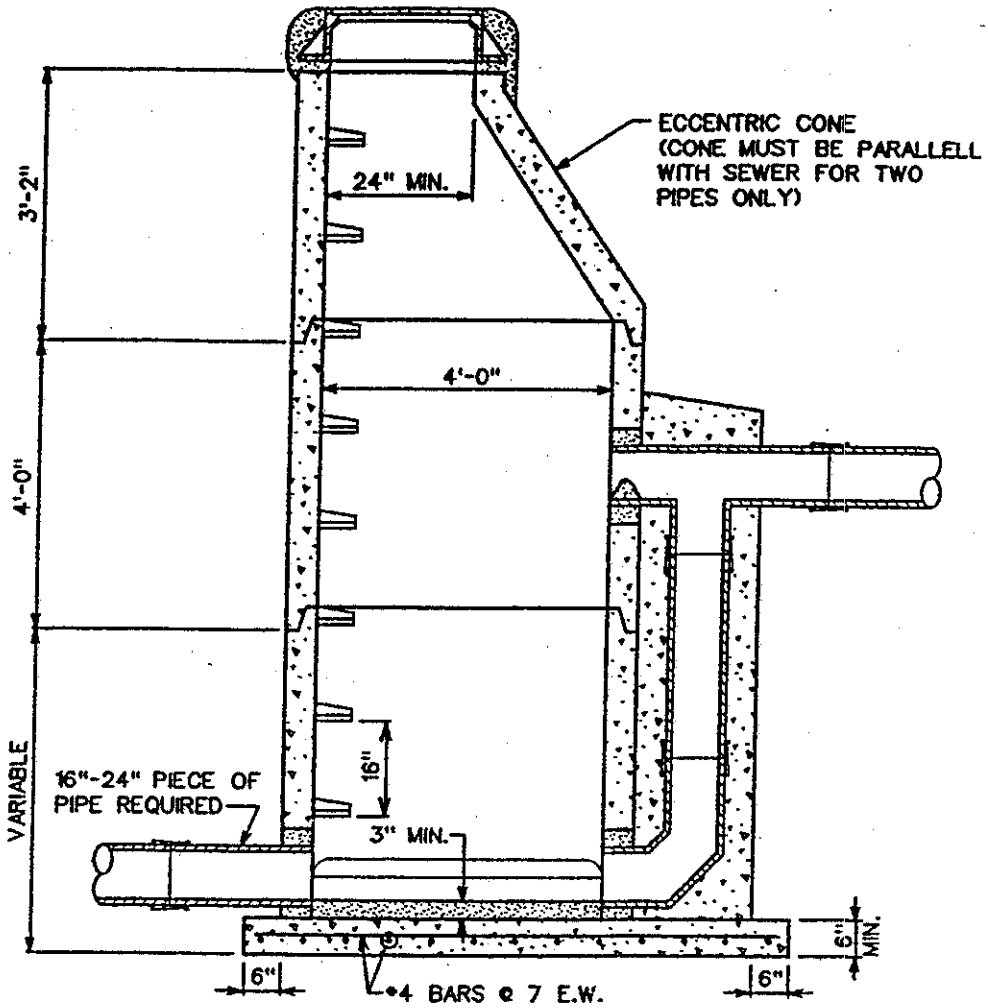

TYPICAL SECTION - STANDARD PRECAST
REINFORCED CONCRETE DROP MANHOLE

NOTES

1. REINFORCED CONCRETE PIPE SECTIONS CONFORMING TO ASTM C476 72A, CLASS II
2. ECCENTRIC CONE IS REQUIRED FOR MANHOLES WITH 2 PIPES ENTERING
3. CONCENTRIC CONE IS REQUIRED FOR MANHOLES WITH 3 OR MORE PIPES ENTERING
4. 6' SECTION MAY BE REQUIRED (SEE SPECIAL PROVISIONS)
5. ALL PRECAST MANHOLES MUST BE LINED WITH 2 COATS OF HI-BUILD EPOXOLINE LINER OR EQUAL (SEE STANDARD SPECIFICATIONS FOR DETAILS)

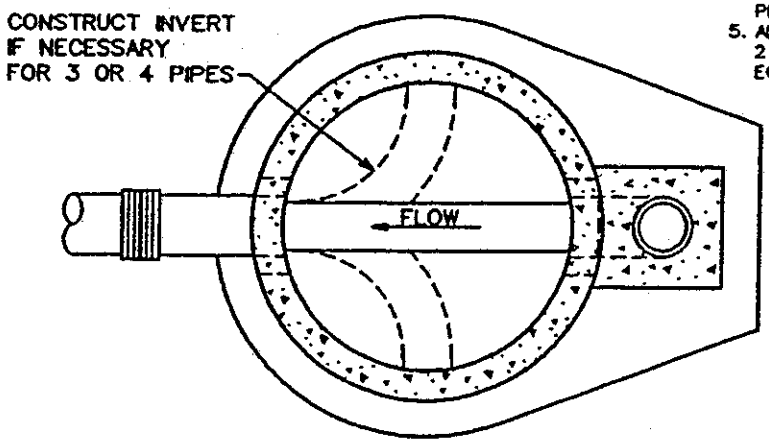

TYPICAL SECTION - SHOWING
BOTTOM OF DROP MANHOLE

SANITARY DROP MANHOLE

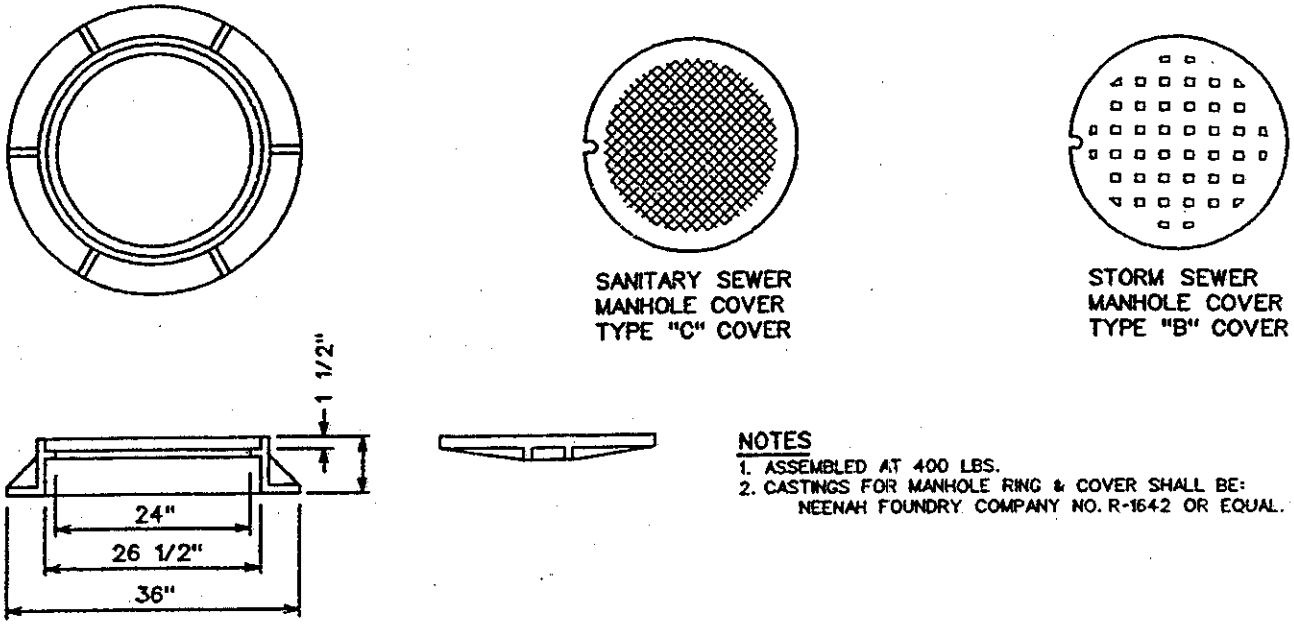

NOTES
1. ASSEMBLED AT 400 LBS.
2. CASTINGS FOR MANHOLE RING & COVER SHALL BE: NEENAH FOUNDRY COMPANY NO. R-1642 OR EQUAL.

MANHOLE RING & COVER DETAILS

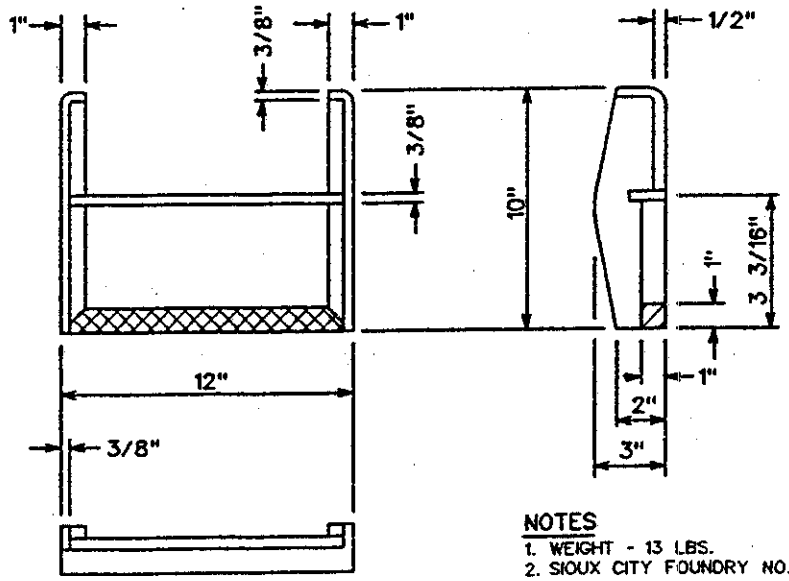

NOTES
1. WEIGHT - 13 LBS.
2. SIOUX CITY FOUNDRY NO. SCF 2011-12" OR EQUAL

PLASTIC OR PLASTIC COATED MANHOLE STEP

MANHOLE DETAILS

SECTION TABLE OF CONTENTS

DIVISION 02 - SITE WORK

SECTION 02532A

FORCE MAINS AND INVERTED SIPHONS; SEWER

07/98

PART 1 GENERAL

1.1 REFERENCES
1.2 SUBMITTALS
1.3 DELIVERY AND STORAGE

PART 2 PRODUCTS

2.1 PIPE AND FITTINGS
2.1.1 Ductile Iron Pipe
2.2 [Enter Appropriate Subpart Title Here]
2.2.1 Ductile Iron Piping
2.3 MISCELLANEOUS MATERIALS
2.3.1 Pipe Coatings and Linings
2.3.2 Bolts, Nuts and Glands
2.3.3 Joint Compound
2.3.4 Joint Tape
2.3.5 Bond Wire

PART 3 EXECUTION

3.1 INSTALLATION
3.1.1 Adjacent Facilities
3.1.2 Cutting
3.1.3 Laying
3.1.4 Jointing
3.1.4.1 Joints for Ductile Iron Pipe
3.1.5 Coating and Lining
3.1.6 PE Pipe Encasement
3.1.7 Thrust Restraint
3.1.7.1 Thrust Blocks
3.1.7.2 Restrained Joints
3.1.8 Bonded Joints
3.2 HYDROSTATIC TESTS
3.2.1 Pressure Test
3.2.2 Leakage Test
3.2.3 Retesting

-- End of Section Table of Contents --

SECTION 02532A

FORCE MAINS AND INVERTED SIPHONS; SEWER
07/98

PART 1 GENERAL

1.1 REFERENCES

The publications listed below form a part of this specification to the extent referenced. The publications are referred to in the text by basic designation only.

AMERICAN SOCIETY FOR TESTING AND MATERIALS (ASTM)

ASTM D 3308	(1997) PTFE Resin Skived Tape

AMERICAN WATER WORKS ASSOCIATION (AWWA)

AWWA C105	(1993) Polyethylene Encasement for Ductile-Iron Pipe Systems
AWWA C110	(1993) Ductile-Iron and Gray-Iron Fittings, 3 In. Through 48 In. (75 mm through 1200 mm), for Water and Other Liquids
AWWA C111	(1995) Rubber-Gasket Joints for Ductile-Iron Pressure Pipe and Fittings
AWWA C115	(1996) Flanged Ductile-Iron Pipe with Ductile-Iron or Gray-Iron Threaded Flanges
AWWA C151	(1996) Ductile-Iron Pipe, Centrifugally Cast, for Water or Other Liquids
AWWA C600	(1993) Installation of Ductile-Iron Water Mains and Their Appurtenances

DUCTILE IRON PIPE RESEARCH ASSOCIATION (DIPRA)

DIPRA-Restraint Design	(1997) Thrust Restraint Design for Ductile Iron Pipe

1.2 SUBMITTALS

Government approval is required for submittals with a "G" designation; submittals not having a "G" designation are for information only. When used, a designation following the "G" designation identifies the office that will review the submittal for the Government. The following shall be submitted in accordance with Section 01330 SUBMITTAL PROCEDURES:

SD-06 Test Reports

Hydrostatic Tests; G-AE, .

Copies of test results.

1.3 DELIVERY AND STORAGE

Pipe, fittings and accessories, and pipe coatings shall not be damaged during delivery, handling, and storage.

PART 2 PRODUCTS

2.1 PIPE AND FITTINGS

Piping for inverted siphons 4 inches in diameter and larger shall be ductile iron, . Pipe shall conform to the respective specifications and other requirements specified below.

2.1.1 Ductile Iron Pipe

a. Ductile Iron Pipe: AWWA C151, working pressure not less than 150 psi, unless otherwise shown or specified.

c. Fittings, Mechanical: AWWA C110, rated for 150 psi.

d. Fittings, Push-On: AWWA C110 and AWWA C111, rated for 150 psi.

2.2 [Enter Appropriate Subpart Title Here]2.2.1 Ductile Iron Piping

a. Push-on Joints: AWWA C111.

b. Mechanical Joints: AWWA C111 as modified by AWWA C151.

c. Flanged Joints: AWWA C115.

2.3 MISCELLANEOUS MATERIALS

Miscellaneous materials shall comply with the following requirements:

2.3.1 Pipe Coatings and Linings

a. interior lining: cement-motor lined with asphaltic seal coat conforming to AWWA C104/ANSI A21.4.

b. exterior coating: asphaltic.

2.3.2 Bolts, Nuts and Glands

AWWA C111.

2.3.3 Joint Compound

A stiff mixture of graphite and oil or inert filler and oil.

2.3.4 Joint Tape

ASTM D 3308.

2.3.5 Bond Wire

Bond wire type RHW or USE, Size 1/0 AWG, neoprene jacketed copper conductor

shaped to stand clear of the joint.

PART 3 EXECUTION

3.1 INSTALLATION

Pipe, pipe fittings, and appurtenances shall be installed at the locations indicated. Excavation, trenching, and backfilling shall be as specified in Section 02316 EXCAVATION, TRENCHING AND BACKFILLING FOR UTILITIES SYSTEMS.

3.1.1 Adjacent Facilities

Installation of force mains and inverted siphons near adjacent facilities shall be as specified in Section 02530N SANITARY SEWERS.

3.1.2 Cutting

Pipe shall be cut in a neat manner with mechanical cutters. Wheel cutters shall be used where practicable. Sharp and rough edges shall be ground smooth and loose material removed from the pipe before laying.

3.1.3 Laying

Except where otherwise authorized, pipe shall be laid with bells facing the direction of laying. Before lowering and while suspended, the pipe shall be inspected for defects. Defective material shall be rejected. Pipe shall be laid in compliance with the following:

a. Ductile Iron: AWWA C600.

3.1.4 Jointing

3.1.4.1 Joints for Ductile Iron Pipe

Installation of mechanical and push-on type joints shall comply with AWWA C600 and the manufacturer's instructions. Installation of flanged joints shall comply with manufacturer's instructions.

3.1.5 Coating and Lining

Flaws and holidays in the coating or lining of the pipe and the pipe joints shall be repaired; the repaired areas shall be at least equal in thickness to the minimum required for the pipe.

3.1.6 PE Pipe Encasement

When installed underground, pipe shall be encased with 8 mil thick polyethylene in accordance with AWWA C105. Encasement shall be in accordance with AWWA C105.

3.1.7 Thrust Restraint

Thrust Restraint shall be as specified in Section 02510 WATER DISTRIBUTION SYSTEM. Plugs, caps, tees and bends deflecting 11-1/4 degrees or more, either vertically or horizontally, shall be provided with thrust restraint. Valves shall be securely anchored or shall be provided with thrust restraints to prevent movement. Thrust restraints shall be either thrust blocks or, for ductile-iron pipes, restrained joints.

3.1.7.1 Thrust Blocks

Thrust blocking shall be concrete of a mix not leaner than: 1 cement, 2-1/2 sand, 5 gravel; and having a compressive strength of not less than 2000 psi after 28 days. Blocking shall be placed between solid ground and the fitting to be anchored. Unless otherwise indicated or directed, the base and thrust bearing sides of thrust blocks shall be poured directly against undisturbed earth. The sides of thrust blocks not subject to thrust may be poured against forms. The area of bearing shall be as shown or as directed. Blocking shall be placed so that the fitting joints will be accessible for repair. Steel rods and clamps, protected by galvanizing or by coating with bituminous paint, shall be used to anchor vertical down bends into gravity thrust blocks.

3.1.7.2 Restrained Joints

For ductile iron pipe, restrained joints shall be designed by the Contractor or the pipe manufacturer in accordance with DIPRA-Restraint Design.

3.1.8 Bonded Joints

Where indicated, a metallic bond shall be provided at each joint, including joints made with flexible couplings or rubber gaskets, of ferrous-metallic piping to effect continuous conductivity. The bond shall be of the thermal-weld type.

3.2 HYDROSTATIC TESTS

The pipeline shall be subjected to both a pressure test and a leakage test. The Contracting Officer shall be notified at least 7 days in advance of equipment tests. The final test report shall be delivered to the Contracting Officer within 30 days of the test.

3.2.1 Pressure Test

After the pipe has been installed, joints completed, thrust blocks have been in place for at least five days, and the trench has been partially backfilled, leaving the joints exposed for examination, the pipe shall be filled with water to expel all air. The pipeline shall be subjected to a test pressure of 100 psi or 150 percent of the working pressure, whichever is greater, for a period of at least one hour. Each valve shall be opened and closed several times during the test. The exposed pipe, joints, fitting, and valves shall be examined for leaks. Visible leaks shall be stopped or the defective pipe, fitting, joints, or valve shall be replaced.

3.2.2 Leakage Test

The leakage test may be conducted subsequent to or concurrently with the pressure test. The amount of water permitted as leakage for the line shall be placed in a sealed container attached to the supply side of the test pump. No other source of supply will be permitted to be applied to the pump or line under test. The water shall be pumped into the line by the test pump as required to maintain the specified test pressure as described for pressure test for a 2 hour period. Exhaustion of the supply or the inability to maintain the required pressure will be considered test failure. PE pipe can experience diametric expansion and pressure elongation during initial testing. The manufacturer shall be consulted prior to testing for special testing considerations. Allowable leakage

shall be determined by the following I-P formula:

L = NDP/K Where:

L = Allowable leakage in gallons per hour.

N = Number of joints in length of pipeline tested.

D = Nominal diameter of the pipe in inches.

P = Square root of the test pressure in psig.

K = 7400 for pipe materials.

At the conclusion of the test, the amount of water remaining in the container shall be measured and the results recorded in the test report.

3.2.3 Retesting

If any deficiencies are revealed during any test, such deficiencies shall be corrected and the tests shall be reconducted until the results of the tests are within specified allowances, without additional cost to the Government.

-- End of Section --

SECTION TABLE OF CONTENTS

DIVISION 02 - SITE WORK

SECTION 02563

(IOWA) PAVEMENTS FOR SMALL PROJECTS

08/00

PART 1 GENERAL

1.1 REFERENCES
1.2 MEASUREMENT AND PAYMENT
1.3 MODIFICATION TO THE IDOT
1.4 DEFINITIONS
1.4.1 Degree of Compaction
1.5 SUBMITTALS
1.6 SAMPLING AND TESTING
1.7 APPROVAL OF MATERIAL
1.8 WEATHER LIMITATIONS
1.8.1 Portland Cement Concrete Pavement
1.8.1.1 Hot Weather Paving
1.8.1.2 Cold Weather Paving
1.8.2 Aggregate Surface Course
1.9 PLANT, EQUIPMENT, AND TOOLS

PART 2 PRODUCTS

2.1 PORTLAND CEMENT CONCRETE PAVEMENT
2.1.1 Portland Cement Concrete
2.1.2 Welded Steel Wire Fabric
2.1.3 Dowels Bars and Tie Bars
2.1.4 Epoxy Resin
2.2 CONCRETE SIDEWALK AND CURB AND GUTTER
2.3 CURING MATERIALS
2.4 JOINT FILLER, BACKER ROD AND SEALANT
2.5 AGGREGATE SURFACE COURSE
2.6 INITIAL TESTS

PART 3 EXECUTION

3.1 PAVEMENT REMOVAL
3.2 PORTLAND CEMENT CONCRETE PAVEMENT
3.2.1 Spreading
3.2.2 Placing Reinforcing Steel
3.2.3 Joints
3.2.4 Contractor Quality Control
3.2.4.1 Air Content Testing
3.2.4.2 Slump Testing
3.2.4.3 Temperature
3.2.4.4 Concrete Strength Testing
3.2.5 Acceptability of Work
3.2.5.1 Strength Requirements
3.2.5.2 Surface Smoothness Requirements
3.2.5.3 Edge Slump Testing and Conformance

3.2.5.4 Thickness Determination
3.3 CONCRETE SIDEWALK AND CURB AND GUTTER
3.3.1 Sidewalks
3.3.2 Curb and Gutter
3.3.3 Curing and Protection
3.3.3.1 Mat Method
3.3.3.2 Impervious Sheeting Method
3.3.3.3 Membrane Curing Method
3.4 AGGREGATE COURSES
3.4.1 Mixing the Materials
3.4.2 Placing
3.4.3 Compaction
3.4.4 Finishing
3.4.5 Acceptability of Work
3.4.5.1 In-Place Tests
3.4.5.2 Thickness
3.4.5.3 Smoothness

-- End of Section Table of Contents --

SECTION 02563

(IOWA) PAVEMENTS FOR SMALL PROJECTS
08/00

PART 1 GENERAL

1.1 REFERENCES

The publications listed below form a part of this specification to the extent referenced. The publications are referred to in the text by basic designation only.

IOWA DEPARTMENT OF TRANSPORTATION (IDOT)

IDOT	Standard Specifications for Highway and Bridge Construction, 1997 Edition

AMERICAN ASSOCIATION OF STATE HIGHWAY AND TRANSPORTATION OFFICIALS (AASHTO)AASHTO T 180 (1993) Moisture-Density Relations of Soils Using a 4.54-kg (10-lb) Rammer and an 457 mm (18-in) Drop

AMERICAN SOCIETY FOR TESTING AND MATERIALS (ASTM)

ASTM C 31/C 31M	(1996) Making and Curing Concrete Test Specimens in the Field
ASTM C 39	(1996) Compressive Strength of Cylindrical Concrete SpecimensASTM C 117 (1995) Materials Finer Than 75 micrometer (No. 200) Sieve in Mineral Aggregates by Washing
ASTM C 136	(1996a) Sieve Analysis of Fine and Coarse Aggregates
ASTM C 143	(1990a) Slump of Hydraulic Cement Concrete
ASTM C 192/C 192M	(1995) Making and Curing Concrete Test Specimens in the Laboratory
ASTM C 231	(1997el) Air Content of Freshly Mixed Concrete by the Pressure Method
ASTM C 494	(1992) Chemical Admixtures for Concrete
ASTM C 881	(1990) Epoxy-Resin-Base Bonding Systems for Concrete
ASTM D 422	(1963; R 1990) Particle-Size Analysis of SoilsASTM D 1556 (1990; R 1996el) Density and Unit Weight of Soil in Place by the Sand-Cone Method
ASTM D 1557	(1998) Laboratory Compaction Characteristics of Soils Using Modified

Effort (56,000 ft-lbf/cu. ft. (2,700 kN-m/cu. m.))ASTM D 2167 (1994) Density and Unit Weight of Soil in Place by the Rubber Balloon MethodASTM D 2922 (1996el) Density of Soil and Soil-Aggregate in Place by Nuclear Methods (Shallow Depth)ASTM D 3017 (1988; R 1996el) Water Content of Soil and Rock in Place by Nuclear Methods (Shallow Depth)ASTM D 3405 (1996) Joint Sealants, Hot-Applied, for Concrete and Asphalt PavementsASTM D 4318 (1995a) Liquid Limit, Plastic Limit, and Plasticity Index of SoilsASTM D 5893 (1996) Cold Applied, Single Component Chemically Curing Silicon Joint Sealant for Portland Cement Concrete Pavement

CORPS OF ENGINEERS (COE) HAND BOOK FOR CONCRETE AND CEMENTCRD-C 525 (1989) Corps of Engineers Test Method for Evaluation of Hot-Applied Joint Sealants for Bubbling Due to Heating

1.2 MEASUREMENT AND PAYMENT

"Method of Measurement" and "Basis of Payment" paragraphs in the IDOT shall not apply.

1.3 MODIFICATION TO THE IDOT

Reference to "Engineer", "Department" and "Office of Materials" in the IDOT shall mean the Contracting Officer or the Contracting Officer's Representative.

1.4 DEFINITIONS

For the purposes of this specification, the following definitions apply.

1.4.1 Degree of Compaction

Degree of compaction of aggregate surface course shall be expressed as a percentage of the maximum density obtained by the test procedure presented in either ASTM D 1557 or AASHTO T 180, Method D. The maximum density shall be determined in accordance with ASTM D 1557 if the material gradation contains less than 30 percent retained on the 3/4 inch sieve or AASHTO T 180 if the material gradation contains more than 30 percent retained on the 3/4 inch sieve. In this specification, degree of compaction shall be a percentage of laboratory maximum density.

1.5 SUBMITTALS

Government approval is required for submittals with a "G" designation; submittals not having a "G" designation are for information only. When used, a designation following the "G" designation identifies the office that will review the submittal for the Government. The following shall be submitted in accordance with Section 01330 SUBMITTAL PROCEDURES:

SD-03 Product Data

Plant, Equipment, and Tools

Job Mix Formula; G-RE

Proposed JMF.

Concrete Mixture Proportioning Studies; G-RE

The report of the Contractor's mixture proportioning studies showing the proportions of all ingredients and supporting information on aggregate and other materials that will be used in the manufacture of concrete, at least 14 days prior to commencing concrete placing operations.

SD-06 Test Reports

Initial Tests; G-RE

Certified copies of test results for approval not less than 20 days before material is required for the work.

Contractor Quality Control; G-RE

The Contractor shall submit all QC test results to the Contracting Officer on a daily basis as the tests are performed.

Acceptability of Work; G-RE

The Contractor shall submit all test results to the Contracting Officer on a daily basis as the tests are performed.

Copies of certified test data.

SD-08 Manufacturer's Instructions

Manufacturer's Recommendations; G-RE

Where installation procedures, or any part thereof, are required to be in accordance with the manufacturer's recommendations, printed copies of these recommendations, 20 days prior to use on the project. Installation of the material will not be allowed until the recommendations are received. Failure to furnish these recommendations can be cause for rejection of the material.

1.6 SAMPLING AND TESTING

Sampling and testing shall be the responsibility of the Contractor. Sampling and testing shall be performed by a testing laboratory approved in accordance with Section 01451 CONTRACTOR QUALITY CONTROL. Work requiring testing will not be permitted until the testing laboratory has been inspected and approved. The materials shall be tested to establish compliance with the specified requirements; testing shall be performed at the specified frequency. The Contracting Officer may specify the time and location of the tests.

1.7 APPROVAL OF MATERIAL

The source of the material for aggregate surface course shall be selected 30 days prior to the time the material will be required in the work. Tentative approval of material will be based on initial test results.

1.8 WEATHER LIMITATIONS

1.8.1 Portland Cement Concrete Pavement

1.8.1.1 Hot Weather Paving

The temperature of concrete shall not exceed 90 degrees F. Steel forms, dowels and reinforcing shall be cooled prior to concrete placement when steel temperatures are greater than 120 degrees F.

1.8.1.2 Cold Weather Paving

The ambient temperature of the air at the placing site and the temperature of surfaces to receive concrete shall be not less 40 degrees F. The temperature of the concrete when placed shall be not less than 50 degrees F. Materials entering the mixer shall be free from ice, snow, or frozen lumps. Salt, chemicals or other materials shall not be incorporated in the concrete to prevent freezing. Upon written approval, chemical admixture conforming to ASTM C 494 Type C or E may be used provided it contains no calcium chloride. Calcium chloride shall not be used at any time. Covering and other means shall be provided for maintaining the concrete at a temperature of at least 50 degrees F for not less than 72 hours after placing, and at a temperature above freezing for the remainder of the curing period. Pavement damaged by freezing shall be completely removed and replaced at the Contractor's expense.

1.8.2 Aggregate Surface Course

Construction of aggregate surface course shall be done when the atmospheric temperature is above 35 degrees F. When the temperature falls below 35 degrees F, the Contractor shall protect all completed areas by approved methods against detrimental effects of freezing. Completed areas damaged by freezing, rainfall, or other weather conditions shall be corrected to meet specified requirements.

1.9 PLANT, EQUIPMENT, AND TOOLS

All plant, equipment, and tools used in the performance of the work shall be subject to approval before the work is started and shall be maintained in satisfactory working condition at all times. The equipment shall be adequate and shall have the capability of producing pavements meeting the requirements as set forth herein.

PART 2 PRODUCTS

2.1 PORTLAND CEMENT CONCRETE PAVEMENT

2.1.1 Portland Cement Concrete

Portland cement concrete shall conform to the requirements specified in Section 2301, "Portland Cement Concrete Pavement" of the IDOT. Proportioning of the mix shall conform to the requirements of Class C-3WR-C(or F)15. Use of a water reducer and fly ash (15% replacement by volume) is optional. Concrete shall have a minimum 28-day field compressive strength strength of 5000 psi. Portland cement shall be either Type I or Type II, low alkali. Coarse aggregate shall conform to the requirements specified in Section 2301, "Portland Cement Concrete Pavement" of the IDOT. Coarse aggregate shall conform to the requirements specified in Section 4115, "Coarse Aggregate for Concrete" and fine aggregate shall

conform to the requirements of Section 4110 "Fine Aggregate for Concrete" of the IDOT. Coarse aggregate shall be Gradation Number 3 or 5 and shall be Durability Class 3. The Contractor shall submit the concrete mixture proportioning studies which shall include: laboratory trial mix, aggregate data, and 28-day compressive strength test results. The test data shall show the mix design proportions of all ingredients including cement, fly ash, aggregate, and additives. Trial mix data shall include slump, air content, unit weight, yield, water/cement ratio, and 28 day compressive strength results as trialed under laboratory conditions.

2.1.2 Welded Steel Wire Fabric

Welded steel wire fabric shall conform to Section 4151.04 "Wire Mesh Reinforcement" of the IDOT.

2.1.3 Dowels Bars and Tie Bars

Dowel bars and tie bars shall conform to Section 4151.02 "Pavement Reinforcement" of the IDOT.

2.1.4 Epoxy Resin

Epoxy resin materials for embedding dowels shall be two-component materials conforming to the requirements of ASTM C 881, Type IV, Grade 3. Class shall be appropriate for each application temperature to be encountered.

2.2 CONCRETE SIDEWALK AND CURB AND GUTTER

Portland cement concrete shall conform to Section 2301, "Portland Cement Concrete Pavement" of the IDOT. Proportioning of the mix shall conform to the requirements of Class C-3WR-C(or F)15. Use of a water reducer and fly ash (15% replacement by volume) is optional. Concrete shall have a minimum compressive strength of 3500 psi at 28 days. Portland cement shall be either Type I or Type II, low alkali. Coarse aggregate shall be Durability Class 2 or better in accordance with Section 4115.04, "DURABILITY IN PORTLAND CEMENT CONCRETE" of the IDOT. The slump shall not be less than 1/2 inch or more than 2-1/2 inches for machine finshed, fixed form, or slip form sidewalk or more than 4 inches for hand finished sidewalk. The slump for curb and gutter shall not exceed 3 inches.

2.3 CURING MATERIALS

Burlap for curing concrete shall conform to Section 4104 "Burlap for Curing Concrete" of the IDOT. Liquid membrane-forming compound shall be white pigmented type 2 conforming to Section 4105 "Liquid Curing Compounds" of the IDOT. Impervious sheeting for curing concrete shall conform to Section 4106 "Plastic Film and Insulating Covers for Curing Concrete" of the IDOT.

2.4 JOINT FILLER, BACKER ROD AND SEALANT

Preformed expansion joint filler shall be a resilient type conforming to Section 4136.03 "PREFORMED EXPANSION JOINT FILLER AND SEALER" of the IDOT. Backer rod shall conform to Section 4136.02 "CONTRACTION JOINT SEALERS" of the IDOT. Cold-applied silicone joint sealant shall conform to ASTM D 5893. Cold-applied silicone sealant for sidewalks shall be gray or stone in color. Hot-applied joint sealant shall conform to ASTM D 3405 and CRD-C 525.

2.5 AGGREGATE SURFACE COURSE

Crushed aggregate surface course shall conform to the requirements specified in Section 4120.05 "CLASS B CRUSHED STONE" of the IDOT, except as modified herein. The amount of flat and elongated particles shall not exceed 20 percent. A flat particle is one having a ratio of width to thickness greater than 3; an elongated particle is one having a ratio of length to width greater than 3. The aggregate for the surface course shall contain a minimum 80 percent crushed material. The portion of the material passing the No. 40 sieve shall have a liquid limit not greater than 35 and a plasticity index of 4 to 9.

2.6 INITIAL TESTS

One of each of the following tests shall be performed on the proposed aggregate surface course material prior to commencing construction to demonstrate that the proposed material meets all specified requirements when furnished. If materials from more than one source are going to be utilized, this testing shall be completed for each source.

a. Sieve Analysis including No. 635 size material. Sieve analysis shall be made in conformance with ASTM C 117, ASTM C 136 and ASTM D 422.

b. Liquid limit and plasticity index. Liquid limit and plasticity index shall be determined in accordance with ASTM D 4318.

c. Moisture-density relationship. The maximum density and optimum moisture content shall be determined in accordance with ASTM D 1557 if the material gradation contains less than 30 percent retained on the 19 mm (3/4 inch) sieve or AASHTO T 180, Method D if the material gradation contains more than 30 percent retained on the 19 mm (3/4 inch) sieve.

d. Wear. Wear tests shall be made in conformance with Section 4121 "Granular Subbase Material" of the IDOT.

PART 3 EXECUTION

3.1 PAVEMENT REMOVAL

Where p.c. concrete and bituminous pavement is to be removed at the locations shown on the drawings, the pavement shall be sawed with a pre-approved concrete saw so as to leave a straight true edge. P.C. concrete pavement removal shall be accomplished by a full depth double sawcut. The initial sawcut shall be located in the pavement area to be removed and shall be 18 inches from the final sawcut. The pavement material and existing base course shall be removed in a manner that will not damage the adjacent in-place pavement to remain . The Contractor must demonstrate that his method of removal will not damage adjacent concrete pavement slabs. Any slab found by the Contracting Officer to be damaged by the Contractor's removal methods shall be fully removed and replaced at no cost to the Government. Pavement material from the removal area shall be disposed of outside the limits of the project site at the Contractor's expense .

3.2 PORTLAND CEMENT CONCRETE PAVEMENT

Except as otherwise specified herein, portland cement concrete shall be placed in accordance with the requirements specified in Section 2301, "Portland Cement Concrete Pavement" of the IDOT. Grooving of concrete pavement is not required.

3.2.1 Spreading

Spreading shall be by machine or hand method. Hand spreading will be permitted only when approved for odd widths or shapes of slabs, or for placement of separate, isolated slabs during removal and replacement type repair operations, or for lanes 50 feet or less in length. Hand spreading, where permitted, shall be done with shovels; rakes shall not be used. Where the concrete is delivered to the form in truck mixers, suitable chutes may be used, provided windrows cover essentially the entire area within the form. In no case shall dumping of concrete in piles be permitted.

3.2.2 Placing Reinforcing Steel

Reinforcement shall be positioned on suitable chairs securely fastened to the subgrade prior to concrete placement, or may be placed on an initial layer of consolidated concrete, with the subsequent layer placed within 30 minutes of the first layer placement.

3.2.3 Joints

Transverse and longitudinal contraction joints shall be of the weakened plane type and shall be formed by sawing. Joints shall be sealed with hot-applied or cold-applied sealant immediately following curing of the concrete or as soon thereafter as weather conditions permit. Before sealing operations commence, a copy of the Manufacturer's Recommendations pertaining to the storage, heating and application of the sealant shall be submitted to the Contracting Officer.

3.2.4 Contractor Quality Control

The Contractor shall perform the inspection and tests described below at the placement and, based upon the results of these inspections and tests, shall take the action required and submit reports as specified. When, in the opinion of the Contracting Officer, the paving operation is out of control, concrete placement shall cease. The Contractor shall furnish all materials, labor, and facilities required for molding, curing, testing, and protecting test specimens at the site and in the laboratory.

3.2.4.1 Air Content Testing

Air content tests shall be made when test specimens are fabricated. In addition, at least two other tests for air content shall be made on randomly selected batches of each separate concrete mixture produced during each 8-hour period of paving. All air content measurements shall be determined in accordance with ASTM C 231. Whenever air content reaches specified limits, an immediate confirmatory test shall be made. If the second test also shows air content at or exceeding specified limits, an adjustment shall immediately be made in the amount of air-entraining admixture batched to bring air content within specified limits. If the next adjusted batch of concrete is not within specified limits, concrete placement shall be halted until concrete air content is within specified limits.

3.2.4.2 Slump Testing

Slump tests shall be made when test specimens are fabricated. Additional tests shall be made when excessive variation in workability is reported by the placing foreman or Government inspector. All slump tests shall be made

in accordance with ASTM C 143. Whenever slump approaches the maximum limit, an adjustment shall immediately be made in the batch masses of water and fine aggregate. When a slump result exceeds the specification limit, no further concrete shall be delivered to the paving site until adjustments have been made and slump is again within the limit.

3.2.4.3 Temperature

The temperature of the concrete shall be measured when strength specimens are fabricated.

3.2.4.4 Concrete Strength Testing

Four (4) cylinders from the same batch shall be fabricated, cured and tested for compressive strength, testing two cylinders at 7-day and two cylinders at 28-day age. A strength test shall be the average of the strengths of two cylinders made from the same sample of concrete and tested at 28 days. A minimum of one set of four (4) cylinders shall be fabricated, cured and tested for each shift of concrete placement nor less than once for each 250 cubic yards of concrete or fraction thereof. All test cylinders shall be 6 by 12 inch cylinders and shall be fabricated in accordance with ASTM C 192/C 192M, using only steel molds, cured in accordance with ASTM C 31/C 31M, and tested in accordance with ASTM C 39. Control charts for strength, showing the 7-day and 28-day CQC compressive strengths, and the 28-day required compressive strength, shall be maintained and submitted with weekly CQC Reports.

3.2.5 Acceptability of Work

The pavement will be accepted on the basis of tests made by the Contractor or its suppliers, as specified herein. The Government may, at its discretion, make check tests to validate the results of the Contractor's testing.

3.2.5.1 Strength Requirements

A strength test shall be the average of the strengths of two cylinders made from the same sample of concrete and tested at 28 days. The strength of the concrete will be considered satisfactory so long as the running average of all sets of three consecutive test results equals or exceeds the specified 28-day field compressive strength and no individual test result falls below the specified strength by more than 500 psi. The Contractor shall furnish all materials, labor, and facilities required for molding, curing, testing, and protecting test specimens at the site and in the laboratory.

3.2.5.2 Surface Smoothness Requirements

The surface of the pavement shall be tested with a 10 foot straightedge to identify all surface irregularities exceeding the tolerances specified above. The entire area of the pavement shall be tested in both a longitudinal and a transverse direction on parallel lines approximately 15 feet apart. The straightedge shall be held in contact with the surface and moved ahead one-half the length of the straightedge for each successive measurement. The amount of surface irregularity shall be determined by placing the straightedge on the pavement surface and allowing it to rest upon the two highest spots covered by its length and measuring the maximum gap between the straightedge and the pavement surface, in the area between these two high points. The finished surfaces of the pavements shall have

no abrupt change of 1/8 inch or more. All pavements shall have a surface smoothness tolerance within 1/4 inch in the transverse and longitudinal direction, except that roads and streets shall have tolerance of 3/16 inch in the longitudinal direction. In areas not meeting the specified limits for surface smoothness, high areas shall be reduced to attain the required smoothness, except as depth is limited below. High areas shall be reduced by grinding the hardened concrete with a surface grinding machine after the concrete is 14 days or more old. The depth of grinding shall not exceed 1/4 inch. All pavement areas requiring surface smoothness corrections in excess of the specified limits, shall be removed and replaced. All areas in which grinding has been performed will be subject to the thickness tolerances specified in paragraph Thickness. Any grinding performed on individual slabs with excessive deficiencies shall be performed at the Contractor's own decision without entitlement to additional compensation if eventual removal of the slab is required.

3.2.5.3 Edge Slump Testing and Conformance

When slip-form paving is used, no slab shall have an edge slump exceeding 3/8 inch. Edge slump shall be determined as above for surface smoothness, at each free edge of each slipformed paving lane constructed. Measurements shall be made at 5 to 15 foot spacings, and as directed. When edge slump exceeding the limits specified above is encountered on either side of the paving lane, additional straightedge measurements shall be made, if required, to define the linear limits of the excessive slump. The concrete for the entire width of the paving lane within these limits of excessive edge slump shall be removed and replaced. Adding concrete or paste to the edge or otherwise manipulating the plastic concrete after the sliding form has passed, or patching the hardened concrete, shall not be used as a method for correcting excessive edge slump.

3.2.5.4 Thickness Determination

The thickness of the pavement shall be determined by the Government on the basis of measurements made on 4 inch diameter cores which shall be drilled by the Contractor, within 7 days after placement of the concrete. Cores shall be drilled at the points directed by the Contracting Officer and there shall be at least one core taken from each separate pavement areas of 4000 sq yd or less. The Contractor shall fill the core holes with an approved non-shrink high strength grout. For pavements less than 8 inches in thickness, when any core shows a deficiency in thickness greater than 1/4 inch, the pavement area represented by the core shall be removed and replaced by the Contractor at no cost to the Government.

3.3 CONCRETE SIDEWALK AND CURB AND GUTTER

The subgrade shall be in a moist condition when concrete is placed. The subgrade shall be prepared and protected to produce a subgrade free from frost when the concrete is deposited. Forms shall be cleaned and coated with form oil each time before concrete is placed. Wood forms may, instead, be thoroughly wetted with water before concrete is placed, except that with probable freezing temperatures, oiling is mandatory.

3.3.1 Sidewalks

Except as otherwise specified herein, portland cement concrete sidewalk shall be placed in accordance with Section 2511 "Removal and Construction of Portland Cement Concrete Sidewalks" of the IDOT. Subgrade shall be placed and compacted in conformance with Section 02210 GRADING. The

subgrade shall be tested for grade and cross section by means of a template extending the full width of the sidewalk and supported between side forms. Finished surfaces shall not vary more than 5/16 inch from the testing edge of a 10-foot straightedge. Permissible deficiency in section thickness will be up to 1/4 inch. All slab edges, including those at formed joints, shall be finished with an edger having a radius of 1/8 inch. Transverse joint shall be edged before brooming, and the brooming shall eliminate the flat surface left by the surface face of the edger. Sidewalk joints shall be constructed to divide the surface into square or rectangular areas. Spacing of transverse and longitudinal contraction and expansion joints shall be as indicated. At the end of the curing period, expansion joints shall be carefully cleaned and filled with cold-applied joint sealant (gray or stone color) as indicated on the drawings. The joint opening shall be thoroughly cleaned before the sealing material is placed. Sealing material shall not be spilled on exposed surfaces of the concrete. Concrete at the joint shall be surface dry and the atmospheric and concrete temperatures shall be above 50 degrees F at the time of application of joint sealing material.

3.3.2 Curb and Gutter

Except as otherwise specified herein, portland cement concrete curb and gutter shall be placed in accordance with Section 2512, "Portland Cement Concrete Curb and Gutter" of the IDOT. The subgrade shall be tested for grade and cross section by means of a template extending the full width of the curb and gutter. Concrete shall be placed to the section required in a single lift. Consolidation shall be achieved by using approved mechanical vibrators. Curve shaped gutters shall be finished with a standard curb "mule". Approved slipformed curb and gutter machines may be used in lieu of hand placement. Exposed surfaces shall be floated and finished with a smooth wood float until true to grade and section and uniform in texture. The edges of the gutter and top of the curb shall be rounded with an edging tool to a radius as shown on the drawings. Finished surfaces shall not vary more than 1/4 inch from the testing edge of a 10-foot straightedge. Permissible deficiency in section thickness will be up to 1/4 inch. Contraction joints shall be spaced so that monolithic sections between curb returns will not be less than 5 feet nor greater than 15 feet in length. Contraction joints shall be constructed by means of 1/8 inch thick separators and of a section conforming to the cross section of the curb and gutter. Separators shall be removed as soon as practicable after concrete has set sufficiently to preserve the width and shape of the joint and prior to finishing. Expansion joints shall be formed by means of preformed expansion joint filler material cut and shaped to the cross section of curb and gutter. Expansion joints at least 1/2 inch in width shall be provided at intervals not exceeding 40 feet. Expansion joints and the top 1 inch depth of contraction joints shall be sealed with cold or hot-applied sealant immediately following curing of the concrete or as soon thereafter as weather permits. The joint opening shall be thoroughly cleaned before the sealing material is placed. Sealing material shall not be spilled on exposed surfaces of the concrete. Concrete at the joint shall be surface dry and the atmospheric and concrete temperatures shall be above 50 degrees F at the time of application of joint sealing material. Excess material on exposed surfaces of the concrete shall be removed immediately and concrete surfaces cleaned.

3.3.3 Curing and Protection

Concrete shall be protected against loss of moisture and rapid temperature changes for at least 7 days from the beginning of the curing operation.

Concrete shall be cured using one of the following methods

3.3.3.1 Mat Method

The entire exposed surface shall be covered with 2 or more layers of burlap. Mats shall overlap each other at least 6 inches. The mat shall be thoroughly wetted with water prior to placing on concrete surface and shall be kept continuously in a saturated condition and in intimate contact with concrete for not less than 7 days.

3.3.3.2 Impervious Sheeting Method

The entire exposed surface shall be wetted with a fine spray of water and then covered with impervious sheeting material. Sheets shall be laid directly on the concrete surface with the light-colored side up and overlapped 12 inches when a continuous sheet is not used. The curing medium shall not be less than 18 inches wider than the concrete surface to be cured, and shall be securely weighted down by heavy wood planks, or a bank of moist earth placed along edges and laps in the sheets. Sheets shall be satisfactorily repaired or replaced if torn or otherwise damaged during curing. The curing medium shall remain on the concrete surface to be cured for not less than 7 days.

3.3.3.3 Membrane Curing Method

A uniform coating of white-pigmented membrane-curing compound shall be applied to the entire exposed surface of the concrete as specified in Section 2301.19A "Curing with White Pigmented Liquid Curing Compound" of the IDOT.

3.4 AGGREGATE COURSES

Aggregate surface course shall be placed as follows. Subgrade shall be placed and compacted in conformance with Section 02210 GRADING.

3.4.1 Mixing the Materials

The coarse and fine aggregates shall be mixed in a stationary plant, or in a traveling plant or bucket loader on an approved paved working area. The Contractor shall make adjustments in mixing procedures or in equipment as directed to obtain true grades, to minimize segregation or degradation, to obtain the required water content, and to insure a satisfactory aggregate course meeting all requirements of this specification.

3.4.2 Placing

The mixed material shall be placed on the prepared subgrade in layers of uniform thickness with an approved spreader. When a compacted layer 6 inches or less in thickness is required, the material shall be placed in a single layer. When a compacted layer in excess of 6 inches is required, the material shall be placed in layers of equal thickness. No layer shall exceed 6 inches or less than 3 inches when compacted. The layers shall be so placed that when compacted they will be true to the grades or levels required with the least possible surface disturbance. Where the aggregate course is placed in more than one layer, the previously constructed layers shall be cleaned of loose and foreign matter by sweeping with power sweepers, power brooms, or hand brooms, as directed. Such adjustments in placing procedures or equipment shall be made as may be directed to obtain true grades, to minimize segregation and degradation, to adjust the water

content, and to insure an acceptable aggregate course.

3.4.3 Compaction

Each layer of the aggregate course shall be compacted as specified with approved compaction equipment. Water content shall be maintained during the compaction procedure to within plus or minus 1 percent of the optimum water content determined from laboratory tests as specified in paragraph SAMPLING AND TESTING. Rolling shall begin at the outside edge of the surface and proceed to the center, overlapping on successive trips at least one-half the width of the roller. Alternate trips of the roller shall be slightly different lengths. Speed of the roller shall be such that displacement of the aggregate does not occur. In all places not accessible to the rollers, the mixture shall be compacted with hand-operated power tampers. Compaction shall continue until each layer has a degree of compaction that is at least 100 percent of laboratory maximum density through the full depth of the layer. The Contractor shall make such adjustments in compacting or finishing procedures as may be directed to obtain true grades, to minimize segregation and degradation, to reduce or increase water content, and to ensure a satisfactory aggregate course. Any materials that are found to be unsatisfactory shall be removed and replaced with satisfactory material or reworked, as directed, to meet the requirements of this specification.

3.4.4 Finishing

The surface of the top layer of aggregate course shall be finished after final compaction by cutting any overbuild to grade and rolling with a steel-wheeled roller. Thin layers of material shall not be added to the top layer of base course to meet grade. If the elevation of the top layer of aggregate course is 1/2 inch or more below grade, then the top layer should be scarified to a depth of at least 3 inches and new material shall be blended in and compacted to bring to grade. Adjustments to rolling and finishing procedures shall be made as directed to minimize segregation and degradation, obtain grades, maintain moisture content, and insure an acceptable base course. Should the surface become rough, corrugated, uneven in texture, or traffic marked prior to completion, the unsatisfactory portion shall be scarified, reworked and recompacted or it shall be replaced as directed.

3.4.5 Acceptability of Work

The aggregate surface course will be accepted on the basis of tests made by the Contractor as specified herein. The Government may, at its discretion, make check tests to validate the results of the Contractor's testing.

3.4.5.1 In-Place Tests

One of each of the following tests shall be performed on samples taken from the placed and compacted aggregate course. Samples shall be taken and tested at the rates indicated for each layer of material placed.

a. Density tests shall be performed on every lift of material placed and at a frequency of one set of tests for every 250 square yards, or portion thereof, of completed area. Density shall be field measured in accordance with either ASTM D 1556, ASTM D 2167 or ASTM D 2922. For the method presented in ASTM D 1556 the base plate as shown in the drawing shall be used. For the method presented in ASTM D 2922 the calibration

curves shall be checked and adjusted if necessary using only the sand cone method as described in paragraph Calibration, of the ASTM publication. Tests performed in accordance with ASTM D 2922 result in a wet unit weight of soil and when using this method, ASTM D 3017 shall be used to determine the moisture content of the soil. The calibration curves furnished with the moisture gauges shall also be checked along with density calibration checks as described in ASTM D 3017. The calibration checks of both the density and moisture gauges shall be made by the prepared containers of material method, as described in paragraph Calibration of ASTM D 2922, on each different type of material being tested at the beginning of a job and at intervals as directed.

b. Sieve Analysis including No. 635 size material shall be performed on every lift of material placed and at a frequency of one test for every 1000 square meters, or portion thereof, of completed area for every 500 tons, or portion thereof, of material placed.

c. Liquid limit and plasticity index tests shall be performed at the same frequency as the sieve analysis.

3.4.5.2 Thickness

The total compacted thickness of the aggregate course shall be within 1/2 inch of the thickness indicated. Where the measured thickness is more than 1/2 inch deficient, such areas shall be corrected by scarifying, adding new material of proper gradation, reblading, and recompacting as directed. Where the measured thickness is more than 1/2 inch thicker than indicated, the course shall be considered as conforming to the specified thickness requirements. Average job thickness shall be the average of all thickness measurements taken for the job, but shall be within 1/4 inch of the thickness indicated. The total thickness of the aggregate course shall be measured at intervals in such a manner as to ensure one measurement for each 500 square yards of aggregate course. Measurements shall be made in 3 inch diameter test holes penetrating the aggregate course.

3.4.5.3 Smoothness

The surface of the top layer shall show no deviations in excess of 3/8 inch when tested with a 10 foot straightedge applied parallel with and at right angles to the centerline of the area to be paved. Measurements shall be taken in successive positions parallel to the centerline of the area to be paved. Measurements shall also be taken perpendicular to the centerline at 50 foot intervals. Deviations exceeding this amount shall be corrected by removing material and replacing with new material, or by reworking existing material and compacting it to meet these specifications.

-- End of Section --

SECTION TABLE OF CONTENTS

DIVISION 02 - SITE WORK

SECTION 02630

STORM-DRAINAGE SYSTEM

03/00

PART 1 GENERAL

1.1 REFERENCES
1.2 SUBMITTALS
1.3 DELIVERY, STORAGE, AND HANDLING
1.3.1 Delivery and Storage
1.3.2 Handling

PART 2 PRODUCTS

2.1 PIPE FOR CULVERTS AND STORM DRAINS
2.1.1 Concrete Pipe
2.2 MISCELLANEOUS MATERIALS
2.2.1 Concrete
2.2.2 Mortar
2.2.3 Precast Concrete Segmental Blocks
2.2.4 Precast Reinforced Concrete Manholes
2.2.5 Frame and Cover for Gratings
2.2.6 Joints
2.2.6.1 Flexible Watertight Joints
2.2.6.2 External Sealing Bands
2.2.6.3 Flexible Watertight, Gasketed Joints
2.3 STEEL LADDER
2.4 RESILIENT CONNECTORS
2.5 HYDROSTATIC TEST ON WATERTIGHT JOINTS
2.5.1 Concrete, Pipe

PART 3 EXECUTION

3.1 EXCAVATION FOR PIPE CULVERTS, STORM DRAINS, AND DRAINAGE STRUCTURES
3.1.1 Trenching
3.1.2 Removal of Rock
3.1.3 Removal of Unstable Material
3.2 BEDDING
3.2.1 Concrete Pipe Requirements
3.3 PLACING PIPE
3.3.1 Concrete, Pipe
3.4 JOINTING
3.4.1 Concrete Pipe
3.4.1.1 Flexible Watertight Joints
3.5 DRAINAGE STRUCTURES
3.5.1 Manholes and Inlets
3.5.2 Walls and Headwalls
3.6 STEEL LADDER INSTALLATION
3.7 BACKFILLING
3.7.1 Backfilling Pipe in Trenches

3.7.2 Backfilling Pipe in Fill Sections
3.7.3 Movement of Construction Machinery
3.7.4 Compaction
3.7.4.1 General Requirements
3.7.4.2 Minimum Density
3.7.5 Determination of Density
3.8 PIPELINE TESTING

-- End of Section Table of Contents --

SECTION 02630

STORM-DRAINAGE SYSTEM
03/00

PART 1 GENERAL

1.1 REFERENCES

The publications listed below form a part of this specification to the extent referenced. The publications are referred to in the text by basic designation only.

AMERICAN ASSOCIATION OF STATE HIGHWAY AND TRANSPORTATION OFFICIALS

(AASHTO)AASHTO M 198 (1998) Joints for Circular Concrete Sewer and Culvert Pipe Using Flexible Watertight Gaskets

AMERICAN SOCIETY FOR TESTING AND MATERIALS (ASTM)

ASTM A 48 (1994a) Gray Iron CastingsASTM A 123/A 123M (1997ael) Zinc (Hot-Dip Galvanized) Coatings on Iron and Steel Products

ASTM A 536 (1999el) Ductile Iron CastingsASTM B 26/B 26M (1998) Aluminum-Alloy Sand CastingsASTM C 76 (1999) Reinforced Concrete Culvert, Storm Drain, and Sewer PipeASTM C 139 (1999) Concrete Masonry Units for Construction of Catch Basins and Manholes

ASTM C 231 (1997el) Air Content of Freshly Mixed Concrete by the Pressure Method

ASTM C 270 (1997) Mortar for Unit Masonry

ASTM C 425 (1998b) Compression Joints for Vitrified Clay Pipe and Fittings

ASTM C 443 (1998) Joints for Circular Concrete Sewer and Culvert Pipe, Using Rubber Gaskets

ASTM C 478 (1997) Precast Reinforced Concrete Manhole Sections

ASTM C 828 (1998) Low-Pressure Air Test of Vitrified Clay Pipe LinesASTM C 877 (1994) External Sealing Bands for Noncircular Concrete Sewer, Storm Drain, and Culvert PipeASTM C 923 (1998) Resilient Connectors Between Reinforced Concrete Manhole Structures, Pipes and Materials

ASTM C 924 (1998) Concrete Pipe Sewer Lines by Low-Pressure Air Test MethodASTM C 1103 (1994) Joint Acceptance Testing of Installed Precast Concrete Pipe Sewer Lines

ASTM D 1056	(1998) Flexible Cellular Materials - Sponge or Expanded Rubber
ASTM D 1171	(1994) Rubber Deterioration - Surface Ozone Cracking Outdoors or Chamber (Triangular Specimens)
ASTM D 1752	(1984; R 1996el) Preformed Sponge Rubber and Cork Expansion Joint Fillers for Concrete Paving and Structural Construction
ASTM D 2167	(1994) Density and Unit Weight of Soil in Place by the Rubber Balloon MethodASTM D
2922	(1996el) Density of Soil and Soil-Aggregate in Place by Nuclear Methods (Shallow Depth)
ASTM D 3017	(1988; R 1996el) Water Content of Soil and Rock in Place by Nuclear Methods (Shallow Depth)

1.2 SUBMITTALS

Government approval is required for submittals with a "G" designation; submittals not having a "G" designation are for information only. When used, a designation following the "G" designation identifies the office that will review the submittal for the Government. The following shall be submitted in accordance with Section 01330 SUBMITTAL PROCEDURES:

SD-03 Product Data

Placing Pipe; ,

Printed copies of the manufacturer's recommendations for installation procedures of the material being placed, prior to installation.

SD-07 Certificates

Pipeline Testing; ,
Hydrostatic Test on Watertight Joints; ,
Determination of Density; ,
Frame and Cover for Gratings; ,

Certified copies of test reports demonstrating conformance to applicable pipe specifications, before pipe is installed. Certification on the ability of frame and cover or gratings to carry the imposed live load.

1.3 DELIVERY, STORAGE, AND HANDLING

1.3.1 Delivery and Storage

Materials delivered to site shall be inspected for damage, unloaded, and stored with a minimum of handling. Materials shall not be stored directly on the ground. The inside of pipes and fittings shall be kept free of dirt and debris. The Contractor shall have a copy of the manufacturer's instructions available at the construction site at all times and shall follow these instructions unless directed otherwise by the Contracting Officer. Solvents, solvent compounds, lubricants, elastomeric gaskets, and any similar materials required to install plastic pipe shall be stored in accordance with the manufacturer's recommendations and shall be discarded

if the storage period exceeds the recommended shelf life. Solvents in use shall be discarded when the recommended pot life is exceeded.

1.3.2 Handling

Materials shall be handled in a manner that ensures delivery to the trench in sound, undamaged condition. Pipe shall be carried to the trench, not dragged.

PART 2 PRODUCTS

2.1 PIPE FOR CULVERTS AND STORM DRAINS

Pipe for culverts and storm drains shall be of the sizes indicated and shall conform to the requirements specified.

2.1.1 Concrete Pipe

ASTM C 76, Class III

2.2 MISCELLANEOUS MATERIALS

2.2.1 Concrete

Unless otherwise specified, concrete and reinforced concrete shall conform to the requirementsunder Section 03301 CAST-IN-PLACE STRUCTURAL CONCRETE. The concrete mixture shall have air content by volume of concrete, based on measurements made immediately after discharge from the mixer, of 5 to 7 percent when maximum size of coarse aggregate exceeds 1-1/2 inches. Air content shall be determined in accordance with ASTM C 231. The concrete covering over steel reinforcing shall not be less than 1 inch thick for covers and not less than 1-1/2 inches thick for walls and flooring. Concrete covering deposited directly against the ground shall have a thickness of at least 3 inches between steel and ground. Expansion-joint filler material shall conform to ASTM D 1751, or ASTM D 1752, or shall be resin-impregnated fiberboard conforming to the physical requirements of ASTM D 1752.

2.2.2 Mortar

Mortar for pipe joints, connections to other drainage structures, and brick or block construction shall conform to ASTM C 270, Type M, except that the maximum placement time shall be 1 hour. The quantity of water in the mixture shall be sufficient to produce a stiff workable mortar . Water shall be clean and free of harmful acids, alkalies, and organic impurities. The mortar shall be used within 30 minutes after the ingredients are mixed with water. The inside of the joint shall be wiped clean and finished smooth. The mortar head on the outside shall be protected from air and sun with a proper covering until satisfactorily cured.

2.2.3 Precast Concrete Segmental Blocks

Precast concrete segmental block shall conform to ASTM C 139, not more than 8 inches thick, not less than 8 inches long, and of such shape that joints can be sealed effectively and bonded with cement mortar.

2.2.4 Precast Reinforced Concrete Manholes

Precast reinforced concrete manholes shall conform to ASTM C 478. Joints

between precast concrete risers and tops shall be made with flexible watertight, rubber-type gaskets meeting the requirements of paragraph JOINTS.

2.2.5 Frame and Cover for Gratings

Frame and cover for gratings shall be cast gray iron, ASTM A 48, Class 35B; cast ductile iron, ASTM A 536, Grade 65-45-12; or cast aluminum, ASTM B 26/B 26M, Alloy 356.0T6. Weight, shape, size, and waterway openings for grates and curb inlets shall be as indicated on the plans.

2.2.6 Joints

2.2.6.1 Flexible Watertight Joints

a. Materials: Flexible watertight joints shall be made with plastic or rubber-type gaskets for concrete pipe . The design of joints and the physical requirements for plastic gaskets shall conform to AASHTO M 198, and rubber-type gaskets shall conform to ASTM C 443. Factory-fabricated resilient joint materials shall conform to ASTM C 425. Gaskets shall have not more than one factory-fabricated splice, except that two factory-fabricated splices of the rubber-type gasket are permitted if the nominal diameter of the pipe being gasketed exceeds 54 inches.

b. Test Requirements: Watertight joints shall be tested and shall meet test requirements of paragraph HYDROSTATIC TEST ON WATERTIGHT JOINTS. Rubber gaskets shall comply with the oil resistant gasket requirements of ASTM C 443. Certified copies of test results shall be delivered to the Contracting Officer before gaskets or jointing materials are installed. Alternate types of watertight joint may be furnished, if specifically approved.

2.2.6.2 External Sealing Bands

Requirements for external sealing bands shall conform to ASTM C 877.

2.2.6.3 Flexible Watertight, Gasketed Joints

a. Gaskets: When infiltration or exfiltration is a concern for pipe lines, the couplings may be required to have gaskets. The closed-cell expanded rubber gaskets shall be a continuous band approximately 7 inches wide and approximately 3/8 inch thick, meeting the requirements of ASTM D 1056, Type 2 A1 or B3, and shall have a quality retention rating of not less than 70 percent when tested for weather resistance by ozone chamber exposure, Method B of ASTM D 1171. Rubber O-ring gaskets shall be 13/16 inch in diameter for pipe diameters of 36 inches or smaller and 7/8 inch in diameter for larger pipe having 1/2 inch deep end corrugation. Rubber O-ring gaskets shall be 1-3/8 inches in diameter for pipe having 1 inch deep end corrugations. O-rings shall meet the requirements of AASHTO M 198 or ASTM C 443. Flexible plastic gaskets shall conform to requirements of AASHTO M 198, Type B.

b. Connecting Bands: Connecting bands shall be of the type, size and sheet thickness of band, and the size of angles, bolts, rods and lugs as indicated or where not indicated as specified in the applicable standards or specifications for the pipe. Exterior rivet heads in the longitudinal seam under the connecting band

shall be countersunk or the rivets shall be omitted and the seam welded. Watertight joints shall be tested and shall meet the test requirements of paragraph HYDROSTATIC TEST ON WATERTIGHT JOINTS.

2.3 STEEL LADDER

Steel ladder shall be provided where the depth of the manhole exceeds 12 feet. These ladders shall be not less than 16 inches in width, with 3/4 inch diameter rungs spaced 12 inches apart. The two stringers shall be a minimum 3/8 inch thick and 2-1/2 inches wide. Ladders and inserts shall be galvanized after fabrication in conformance with ASTM A 123/A 123M.

2.4 RESILIENT CONNECTORS

Flexible, watertight connectors used for connecting pipe to manholes and inlets shall conform to ASTM C 923.

2.5 HYDROSTATIC TEST ON WATERTIGHT JOINTS

2.5.1 Concrete, Pipe

A hydrostatic test shall be made on the watertight joint types as proposed. Only one sample joint of each type needs testing; however, if the sample joint fails because of faulty design or workmanship, an additional sample joint may be tested. During the test period, gaskets or other jointing material shall be protected from extreme temperatures which might adversely affect the performance of such materials. Performance requirements for joints in reinforced and nonreinforced concrete pipe shall conform to AASHTO M 198 or ASTM C 443.

PART 3 EXECUTION

3.1 EXCAVATION FOR PIPE CULVERTS, STORM DRAINS, AND DRAINAGE STRUCTURES

Excavation of trenches, and for appurtenances and backfilling for culverts and storm drains, shall be in accordance with the applicable portions of Section 02315 "Excavation, Filling, and Backfilling for Structures" and the requirements specified below.

3.1.1 Trenching

The width of trenches at any point below the top of the pipe shall be not greater than the outside diameter of the pipe plus 24 inches to permit satisfactory jointing and thorough tamping of the bedding material under and around the pipe. Sheeting and bracing, where required, shall be placed within the trench width as specified. Contractor shall not overexcavate. Where trench widths are exceeded, redesign with a resultant increase in cost of stronger pipe or special installation procedures will be necessary. Cost of this redesign and increased cost of pipe or installation shall be borne by the Contractor without additional cost to the Government.

3.1.2 Removal of Rock

Rock in either ledge or boulder formation shall be replaced with suitable materials to provide a compacted earth cushion having a thickness between unremoved rock and the pipe of at least 8 inches or 1/2 inch for each foot of fill over the top of the pipe, whichever is greater, but not more than three-fourths the nominal diameter of the pipe. Where bell-and-spigot pipe is used, the cushion shall be maintained under the bell as well as

under the straight portion of the pipe. Rock excavation shall be as specified and defined in Section 02315 "Excavation, Trenching, and Backfilling for Structures.

3.1.3 Removal of Unstable Material

Where wet or otherwise unstable soil incapable of properly supporting the pipe, as determined by the Contracting Officer, is unexpectedly encountered in the bottom of a trench, such material shall be removed to the depth required and replaced to the proper grade with select granular material, compacted as provided in paragraph BACKFILLING. When removal of unstable material is due to the fault or neglect of the Contractor in his performance of shoring and sheeting, water removal, or other specified requirements, such removal and replacement shall be performed at no additional cost to the government.

3.2 BEDDING

The bedding surface for the pipe shall provide a firm foundation of uniform density throughout the entire length of the pipe.

3.2.1 Concrete Pipe Requirements

When no bedding class is specified or detailed on the drawings, concrete pipe shall be bedded in a soil foundation accurately shaped and rounded to conform to the lowest one-fourth of the outside portion of circular pipe for the entire length of the pipe . When necessary, the bedding shall be tamped. Bell holes and depressions for joints shall be not more than the length, depth, and width required for properly making the particular type of joint.

3.3 PLACING PIPE

Each pipe shall be thoroughly examined before being laid; defective or damaged pipe shall not be used. Pipelines shall be laid to the grades and alignment indicated. Proper facilities shall be provided for lowering sections of pipe into trenches. Lifting lugs in vertically elongated metal pipe shall be placed in the same vertical plane as the major axis of the pipe. Pipe shall not be laid in water, and pipe shall not be laid when trench conditions or weather are unsuitable for such work. Diversion of drainage or dewatering of trenches during construction shall be provided as necessary.

3.3.1 Concrete, Pipe

Laying shall proceed upgrade with spigot ends of bell-and-spigot pipe and tongue ends of tongue-and-groove pipe pointing in the direction of the flow.

3.4 JOINTING

3.4.1 Concrete Pipe

3.4.1.1 Flexible Watertight Joints

Gaskets and jointing materials shall be as recommended by the particular manufacturer in regard to use of lubricants, cements, adhesives, and other special installation requirements. Surfaces to receive lubricants, cements, or adhesives shall be clean and dry. Gaskets and jointing materials shall be affixed to the pipe not more than 24 hours prior to the

installation of the pipe, and shall be protected from the sun, blowing dust, and other deleterious agents at all times. Gaskets and jointing materials shall be inspected before installing the pipe; any loose or improperly affixed gaskets and jointing materials shall be removed and replaced. The pipe shall be aligned with the previously installed pipe, and the joint pushed home. If, while the joint is being made the gasket becomes visibly dislocated the pipe shall be removed and the joint remade.

3.5 DRAINAGE STRUCTURES

3.5.1 Manholes and Inlets

Construction shall be of reinforced concrete, plain concrete, precast reinforced concrete, or precast concrete segmental blocks, complete with frames and covers or gratings; and with fixed galvanized steel ladders where indicated. Pipe connections to concrete manholes and inlets shall be made with flexible, watertight connectors.

3.5.2 Walls and Headwalls

Construction shall be as indicated.

3.6 STEEL LADDER INSTALLATION

Ladder shall be adequately anchored to the wall by means of steel inserts spaced not more than 6 feet vertically, and shall be installed to provide at least 6 inches of space between the wall and the rungs. The wall along the line of the ladder shall be vertical for its entire length.

3.7 BACKFILLING

3.7.1 Backfilling Pipe in Trenches

After the pipe has been properly bedded, selected material from excavation or borrow, at a moisture content that will facilitate compaction, shall be placed along both sides of pipe in layers not exceeding 6 inches in compacted depth. The backfill shall be brought up evenly on both sides of pipe for the full length of pipe. The fill shall be thoroughly compacted under the haunches of the pipe. Each layer shall be thoroughly compacted with mechanical tampers or rammers. This method of filling and compacting shall continue until the fill has reached an elevation of at least 12 inches above the top of the pipe. The remainder of the trench shall be backfilled and compacted by spreading and rolling or compacted by mechanical rammers or tampers in layers not exceeding 12 inches. Tests for density shall be made as necessary to ensure conformance to the compaction requirements specified below. Where it is necessary, in the opinion of the Contracting Officer, that sheeting or portions of bracing used be left in place, the contract will be adjusted accordingly. Untreated sheeting shall not be left in place beneath structures or pavements.

3.7.2 Backfilling Pipe in Fill Sections

For pipe placed in fill sections, backfill material and the placement and compaction procedures shall be as specified below. The fill material shall be uniformly spread in layers longitudinally on both sides of the pipe, not exceeding 6 inches in compacted depth, and shall be compacted by rolling parallel with pipe or by mechanical tamping or ramming. Prior to commencing normal filling operations, the crown width of the fill at a height of 12 inches above the top of the pipe shall extend a distance of

not less than twice the outside pipe diameter on each side of the pipe or 12 feet, whichever is less. After the backfill has reached at least 12 inches above the top of the pipe, the remainder of the fill shall be placed and thoroughly compacted in layers not exceeding 12 inches.

3.7.3 Movement of Construction Machinery

When compacting by rolling or operating heavy equipment parallel with the pipe, displacement of or injury to the pipe shall be avoided. Movement of construction machinery over a culvert or storm drain at any stage of construction shall be at the Contractor's risk. Any damaged pipe shall be repaired or replaced.

3.7.4 Compaction

3.7.4.1 General Requirements

Cohesionless materials include gravels, gravel-sand mixtures, sands, and gravelly sands. Cohesive materials include clayey and silty gravels, gravel-silt mixtures, clayey and silty sands, sand-clay mixtures, clays, silts, and very fine sands. When results of compaction tests for moisture-density relations are recorded on graphs, cohesionless soils will show straight lines or reverse-shaped moisture-density curves, and cohesive soils will show normal moisture-density curves.

3.7.4.2 Minimum Density

Backfill over and around the pipe and backfill around and adjacent to drainage structures shall be compacted at the approved moisture content to the following applicable minimum density, which will be determined as specified below.

a. Under paved roads, streets, parking areas, and similar-use pavements including adjacent shoulder areas, the density shall be not less than 95 percent of maximum density for cohesive material and 95 percent of maximum density for cohesionless material, up to the elevation where requirements for pavement subgrade materials and compaction shall control.

b. Under unpaved or turfed traffic areas, density shall not be less than 85 percent of maximum density for cohesive material and 90 percent of maximum density for cohesionless material.

c. Under nontraffic areas, density shall be not less than that of the surrounding material.

3.7.5 Determination of Density

Testing shall be the responsibility of the Contractor and performed at no additional cost to the Government. Testing shall be performed by an approved commercial testing laboratory or by the Contractor subject to approval. Tests shall be performed in sufficient number to ensure that specified density is being obtained. Laboratory tests for moisture-density relations shall be made in accordance with ASTM D 1557 except that mechanical tampers may be used provided the results are correlated with those obtained with the specified hand tamper. Field density tests shall be determined in accordance with ASTM D 2167 or ASTM D 2922. When ASTM D 2922 is used, the calibration curves shall be checked and adjusted, if necessary, using the sand cone method as described in paragraph Calibration

of the referenced publications. ASTM D 2922 results in a wet unit weight of soil and when using this method ASTM D 3017 shall be used to determine the moisture content of the soil. The calibration curves furnished with the moisture gauges shall be checked along with density calibration checks as described in ASTM D 3017 or ASTM D 2922. Test results shall be furnished the Contracting Officer. The calibration checks of both the density and moisture gauges shall be made at the beginning of a job on each different type of material encountered and at intervals as directed.

3.8 PIPELINE TESTING

Lines shall be tested for leakage by low pressure air or water testing or exfiltration tests, as appropriate. Low pressure air testing for concrete pipes shall conform to ASTM C 924. Low pressure air testing procedures for other pipe materials shall use the pressures and testing times prescribed in ASTM C 828 or ASTM C 924, after consultation with the pipe manufacturer. Testing of individual joints for leakage by low pressure air or water shall conform to ASTM C 1103. Prior to exfiltration tests, the trench shall be backfilled up to at least the lower half of the pipe. If required, sufficient additional backfill shall be placed to prevent pipe movement during testing, leaving the joints uncovered to permit inspection. Visible leaks encountered shall be corrected regardless of leakage test results. When the water table is 2 feet or more above the top of the pipe at the upper end of the pipeline section to be tested, infiltration shall be measured using a suitable weir or other device acceptable to the Contracting Officer. An exfiltration test shall be made by filling the line to be tested with water so that a head of at least 2 feet is provided above both the water table and the top of the pipe at the upper end of the pipeline to be tested. The filled line shall be allowed to stand until the pipe has reached its maximum absorption, but not less than 4 hours. After absorption, the head shall be reestablished. The amount of water required to maintain this water level during a 2-hour test period shall be measured. Leakage as measured by the exfiltration test shall not exceed 0.2 gallons per inch in diameter per 100 feet of pipeline per hour. When leakage exceeds the maximum amount specified, satisfactory correction shall be made and retesting accomplished. Testing, correcting, and retesting shall be made at no additional cost to the Government.

-- End of Section --

SECTION TABLE OF CONTENTS

DIVISION 02 - SITE WORK

SECTION 02710

BOX CULVERT WALL DRAINAGE SYSTEM

01/98

PART 1 GENERAL

1.1 REFERENCES
1.2 SUBMITTALS
1.3 DELIVERY, STORAGE AND HANDLING

PART 2 PRODUCTS

2.1 PIPE FOR WALL DRAINAGE SYSTEM
2.1.1 Plastic Pipe
2.1.1.1 Corrugated Polyethylene (PE) Drainage Pipe
2.1.1.2 Acrylonitrile-Butadiene-Styrene (ABS) Pipe
2.1.1.3 Polyvinyl Chloride (PVC) Pipe
2.1.1.4 Slotted Perforations in Plastic Pipe
2.1.2 Fittings
2.2 FREE DRAINING GRANULAR BACKFILL MATERIAL
2.2.1 Optional Gradation
2.2.2 Sampling and Testing
2.2.2.1 Test Methods
2.2.2.2 Testing Frequency
2.3 APPROVED MATERIALS
2.3.1 Pipe for Wall Drains
2.3.2 Free Draining Granular Backfill Material

PART 3 EXECUTION

3.1 GENERAL REQUIREMENTS
3.1.1 Extent
3.1.2 Outlet Connections
3.1.3 Drainage Lines
3.1.4 Outlet Lines
3.2 INSTALLATION
3.2.1 Trenching and Excavation
3.2.2 Pipe Laying
3.2.3 Jointing
3.2.3.1 Perforated Pipes
3.2.3.2 ABS Pipe
3.2.3.3 PVC Pipe
3.2.3.4 Corrugated Polyethylene
3.2.4 Installation of Free Draining Granular Backfill

-- End of Section Table of Contents --

SECTION 02710

BOX CULVERT WALL DRAINAGE SYSTEM
01/98

PART 1 GENERAL

1.1 REFERENCES

The publications listed below form a part of this specification to the extent referenced. The publications are referred to in the text by basic designation only.

AMERICAN ASSOCIATION OF STATE HIGHWAY AND TRANSPORTATION OFFICIALS (AASHTO)

AASHTO M 252M	(1996) Corrugated Polyethylene Drainage Tubing
AASHTO M 294M	(1998) Corrugated Polyethylene Pipe, 305- to 915-mm (12- to 36 in.) Diameter

AMERICAN SOCIETY FOR TESTING AND MATERIALS (ASTM)

ASTM C 142	(1978; R 1990) Clay Lumps and Friable Particles in Aggregates
ASTM D 2751	(1996a)Acrylonitrile-Butadiene-Styrene (ABS) Sewer Pipe and Fittings
ASTM D 2922	(1991) Density of Soil and Soil-Aggregate In Place by Nuclear Methods (Shallow Depth)
ASTM D 3017	(1988; R 1993) Water Content of Soil and Rock In Place by Nuclear Methods (Shallow Depth)
ASTM D 3034	(1998) Type PSM Poly(Vinyl Chloride) (PVC) Sewer Pipe and Fittings
ASTM D 3212	(1996a) Joints for Drain and Sewer Plastic Pipes Using Flexible Elastomeric Seals
ASTM F 405	(1997) Corrugated Polyethylene (PE) Tubing and Fittings
ASTM F 667	(1997) Large Diameter Corrugated Polyethylene Tubing and Fittings
ASTM F 758	(1995) Smooth-Wall Poly(Vinyl Chloride) (PVC) Plastic Underdrain Systems for Highway, Airport, and Similar Drainage

ASTM F 949 (1999) Poly(Vinyl Chloride) (PVC) Corrugated Sewer Pipe With a Smooth Interior and Fittings

1.2 SUBMITTALS

Government approval is required for submittals with a "G" designation; submittals not having a "G" designation are for information only. When used, a designation following the "G" designation identifies the office that will review the submittal for the Government. The following shall be submitted in accordance with Section 01330 SUBMITTAL PROCEDURES:

SD-04 Samples

Materials; G-RE

Two randomly selected samples of each type of pipe and fitting, prior to delivery of materials to the site.

SD-06 Test Reports

Sampling and Testing; G-RE

Copies of initial and in-place test results within 24 hours of completion of test.

SD-07 Certificates

Materials; G-RE

Certifications from the manufacturers attesting that materials meet specification requirements.

1.3 DELIVERY, STORAGE AND HANDLING

Materials placed in storage shall be stored with protection from the weather, humidity and temperature variations, dirt and dust, or other contaminants. Plastic pipe shall not be exposed to direct sunlight for more than 6 months from time of manufacture to installation.

PART 2 PRODUCTS

2.1 PIPE FOR WALL DRAINAGE SYSTEM

Pipe for wall drainage system shall be one of the types indicated below and size indicated on the drawings. Appropriate transitions, adapters, or joint details shall be used where pipes of different types or materials are connected.

2.1.1 Plastic Pipe

Plastic pipe shall contain ultraviolet inhibitor to provide protection from exposure to direct sunlight.

2.1.1.1 Corrugated Polyethylene (PE) Drainage Pipe

The Contractor shall furnish ASTM F 405 heavy duty for pipe 3 to 6 inches in diameter inclusive, ASTM F 667 for pipe 8 to 24 inches in diameter; or AASHTO M 252M for pipe 3 to 10 inches in diameter or AASHTO M 294M for

pipe 12 to 24 inches in diameter. Fittings shall be pipe manufacturer's standard type and shall conform to the indicated specification.

2.1.1.2 Acrylonitrile-Butadiene-Styrene (ABS) Pipe

ASTM D 2751, with a maximum SDR of 35.

2.1.1.3 Polyvinyl Chloride (PVC) Pipe

ASTM F 758, Type PS 46, ASTM D 3034, or ASTM F 949 with a minimum pipe stiffness of 46 psi.

2.1.1.4 Slotted Perforations in Plastic Pipe

Circumferential slots shall be cleanly cut so as not to restrict the inflow of water and uniformly spaced along the length and circumference of the tubing. Width of slots shall be 1/16 inch. The length of individual slots shall not exceed 1-1/4 inches on 3 inch diameter tubing; 10 percent of the tubing inside nominal circumference on 4 to 8 inch diameter tubing; and 2-1/2 inches on 10 inch diameter tubing. Rows of slots shall be symmetrically spaced so that they are fully contained in quadrants of the pipe. Slots shall be centered in the valleys of the corrugations of profile wall pipe. The water inlet area shall be a minimum of 0.5 square inch per linear foot of tubing. Manufacturer's standard perforated pipe which essentially meets these requirements may be used with prior approval of the Contracting Officer.

2.1.2 Fittings

Fittings shall be of compatible materials for pipe, of corresponding weight and quality, and as specified herein.

2.2 FREE DRAINING GRANULAR BACKFILL MATERIAL

Wall drainage granular backfill material shall be washed sand, sand and gravel, crushed stone, crushed stone sceenings, or slag composed of hard, tough, durable particles free from adherent coatings. Free draining granular backfill material shall not contain corrosive agents, organic matter, or soft, friable, thin, or elongated particles and shall be evenly graded between the limits specified in TABLE 1. Gradation curves will exhibit no abrupt changes in slope denoting skip or gap grading. Granular backfill material shall be clean and free from soil and foreign materials. Granular backfill material found to be dirty or otherwise contaminated shall be removed and replaced with material meeting the specific requirements, at no additional cost to the Government.

TABLE 1. FREE DRAINING GRANULAR BACKFILL MATERIAL

Sieve Designation	Percent by Weight Passing Square-Mesh Sieves
1 inch	100
3/4 inch	95-100
3/8 inch	60-85
No. 8	30-55
No. 30	15-30
No. 200	0-5

2.2.1 Optional Gradation

Free draining granular backfill material shall meet the requirements of the IDOT "Standard Specifications for Highway and Bridge Construction," Series 1992, Section 4126 Aggregate for Type B Asphalt Cement Concrete, Gradation No. 25.

2.2.2 Sampling and Testing

Sampling and testing shall be the responsibility of the Contractor. Granular backfill material shall be tested to establish compliance with the specified requirements. Sampling and testing shall be performed by an approved commerical testing laboratory. Tests shall be performed at the frequency specified hereinafter. Copies of the test reults shall be furnished to the Contracting Officer as soon as tests are performed and in every case prior to placing subsequent construction over the completed granular backfill material.

The Contractor shall select the source of materials and perform the initial sampling sufficiently in advance to not delay the work. The Contractor shall control his operations during production and placement of material, so that the materials in the completed granular backfill will meet the specified requirements. All quality control sampling and testing shall be performed by the Contractor in accordance with Section 01451 CONTRACTOR QUALITY CONTROL and as specified herein. The Government may perform verification tests for final approval of the materials in the completed granular backfill. All samples including samples taken during production shall be representative of the granular backfill material furnished or proposed to be furnished. Samples shall be taken in conformance with ASTM D 75, or other approved method. All sampling operations shall take place in the presence of a representtive of the Contracting Officer. The Contracting Officer has the option to select samples from stockpiles at the production facility or at the construction site.

2.2.2.1 Test Methods

a. Sieve Analyses

Sieve analyses shall be made in accordance with ASTM C 117, ASTM C 136, ASTM D 422. Sieves shall be in accordance with ASTM E 11.

b. Density Tests

Field density tests shall be made in accordance with ASTM D 1556 or ASTM D 2922. Calibration curves, tests results, and correlation tests shall be furnished within 24 hours of conclusion of the tests. When using ASTM D 2922, ASTM D 3017 shall be used to determine the moisture content of the granular backfill material. The calibration curves furnished with the moisture guages shall be checked along with density calibriation checks as described in ASTM D 3017. The calibration checks of both the density and moisture guages shall be made by the prepared containers of material method, as described in paragraph "Calibration" of ASTM D 2922, on each different type of material being tested at the beginning of a job and at intervals as directed by the Contracting Officer.

c. Deleterious Materials Test

Deleterious materials shall be determined in accordance with ASTM C 142.

2.2.2.2 Testing Frequency

The following tests shall be performed by the Contactor at the specified frequencies.

a. Granular Backfill Initial Tests

One of each of the following tests shall be performed on the proposed material before the work is started to demonstrate that the proposed material will meet all specified requirements when furnished and after placement and compaction.

Sieve Analysis (incl. 0.02 mm size material), ASTM C 117, ASTM C 136, ASTM D 422
Deleterious Materials, ASTM C 142

b. Granular Backfill In-Place Tests

Sieve analyses shall be performed at a rate of at least one test for each day's production. Gradation tests shall be performed on this material after it has been placed from locations directed by the Contracting Officer. Field density and moisture content tests shall be performed at a rate of at least one test for every 250 square yards of completed area and not less than one test for each day's production.

Sieve Analysis (incl. 0.02 mm size material), ASTM C 117, ASTM C 136, ASTM D 422
Moisture-Density, ASTM D 1556

2.3 APPROVED MATERIALS

Box culvert wall drainage system materials shall meet the following limits when tested as specified.

2.3.1 Pipe for Wall Drains

Strength tests of pipe shall conform to field service test requirements of the Federal Specification, ASTM specification, or AASHTO specification covering the product (paragraph 2.1 PIPE FOR WALL DRAINAGE SYSTEM).

2.3.2 Free Draining Granular Backfill Material

The aggregate source for the granular backfill material shall be selected at least 60 days prior to its use in the work. Tentative approval of the source will be based on certified initial test results to verify that materials proposed for use meet the contract requirements. Final approval of both the source and the material will be based on in-place test results for gradation, moisture-density, and deleterious materials. The in-place tests shall be performed on samples taken from the completed and compacted granular backfill.

a. Sieve Analysis: The aggregate composite shall meet the gradation limits given in Table 1 or paragraph 2.2.1.

b. Moisture-Density: The maximum density and optimum moisture shall be determined in accordance with ASTM D 698.

c. Deleterious Materials: The aggregate portion passing the No. 4 sieve of the combined materials shall not contain more than 5.0 percent shale retained on the No. 16 sieve. Granualr backfill material shall not contain disintegrated granite, smectites, or expanding lattice clay minerals.

PART 3 EXECUTION

3.1 GENERAL REQUIREMENTS

3.1.1 Extent

The wall drainage system shall be furnished and installed as a complete system as shown.

3.1.2 Outlet Connections

Wall drainage system pipe shall be terminated as shown.

3.1.3 Drainage Lines

Drainage lines shall be constructed of perforated pipe.

3.1.4 Outlet Lines

Outlet lines shall be constructed of closed-joint nonperforated, nonporous pipe.

3.2 INSTALLATION

3.2.1 Trenching and Excavation

Required trenching and excavation shall be in accordance with Section 02315 EXCAVATION, FILLING, AND BACKFILLING FOR STRUCTURES. Trenches shall be kept dry during installation of drainage system.

3.2.2 Pipe Laying

Drain lines shall be laid to true grades and alignment with a continuous fall in the direction of flow. Bells of pipe sections shall face upgrade. Interior of pipe shall be cleaned thoroughly before being laid. When drain lines are left open for connection to discharge lines, the open ends shall be temporarily closed and the location marked with wooden stakes. Perforated pipe shall be laid with perforations facing down. Any length that has had its grade or joints disturbed shall be removed and relaid at no additional cost to the Government. Perforated corrugated polyethylene drainage tubing and plastic piping shall be installed in accordance with manufacturer's specifications and as specified herein. Tubing and piping with physical imperfections shall not be installed. All pipes in place shall be approved before backfilling.

3.2.3 Jointing

3.2.3.1 Perforated Pipes

Perforated drain pipes shall be laid with closed joints.

3.2.3.2 ABS Pipe

ABS pipe shall be joined using solvent cement or elastomeric joints and shall be in accordance with ASTM D 2751, with dimensions and tolerances in accordance with TABLE II therein.

3.2.3.3 PVC Pipe

PVC pipe joints shall be in accordance with ASTM D 3034, ASTM D 3212, or ASTM F 949.

3.2.3.4 Corrugated Polyethylene

Corrugated polyethylene (PE) pipe joints shall be in accordance with ASTM F 405 or ASTM F 667.

3.2.4 Installation of Free Draining Granular Backfill

After joints and connections have been inspected and approved, the specified granular backfill material shall be placed around and over the pipe for the full width of the trench and full width between pipe and adjacent walls and 12 inches above the top of the pipe. The granular backfill shall be placed preventing displacement of or injury to the pipe. The granular backfill material shall be placed in layers not to exceed 8 inches thick, and each layer shall then be thoroughly compacted by mechanical hand tampers to obtain the required density. Rollers for compaction will not be permitted to operate within 2 feet of structure walls. Prior to compaction, the granular backfill material shall be saturated by flooding and each layer shall be kept in an essentially saturated condition during compaction. Water for compaction shall be applied immediately before compaction is performed and during the compaction process. The water shall be applied with hoses connected to header pipes, by water trucks with pressure spray bars, or by any other approved method. The distance between the spray bar and the compaction equipment shall be no more than 15 feet. Degree of compaction for the granular backfill material shall be in accordance with Section 02315 EXCAVATION, FILLING AND BACKFILLING FOR STRUCTURES. Granular backfill material shall be placed one lift above the adjoining backfill to prevent contamination. The adjoining backfill shall be sloped away from the granular backfill with grades not to exceed between 1 and 3 percent so that the surface of the adjoining backfill material will drain freely away from the granular backfill material. This grading shall be maintained throughtout backfill operations.

-- End of Section --

SECTION TABLE OF CONTENTS

DIVISION 02 - SITE WORK

SECTION 02763A

PAVEMENT MARKINGS

04/01

PART 1 GENERAL

1.1 REFERENCES
1.2 SUBMITTALS
1.3 DELIVERY AND STORAGE
1.4 EQUIPMENT
1.4.1 Paint Application Equipment
1.4.2 Surface Preparation Equipment
1.4.2.1 Sandblasting Equipment
1.4.2.2 Waterblast Equipment
1.4.3 Marking Removal Equipment
1.4.3.1 Shotblasting Equipment
1.4.3.2 Chemical Equipment
1.4.4 Traffic Controls
1.5 HAND-OPERATED, PUSH-TYPE MACHINES
1.6 MAINTENANCE OF TRAFFIC
1.6.1 Roads, Streets, and Parking Areas
1.7 WEATHER LIMITATIONS FOR REMOVAL

PART 2 PRODUCTS

2.1 PAINT
2.2 SAMPLING AND TESTING

PART 3 EXECUTION

3.1 SURFACE PREPARATION
3.1.1 Pretreatment for Early Painting
3.1.2 Cleaning Existing Pavement Markings
3.1.3 Cleaning Concrete Curing Compounds
3.2 APPLICATION
3.2.1 Paint
3.2.1.1 Rate of Application
3.2.1.2 Drying
3.3 MARKING REMOVAL
3.3.1 Equipment Operation
3.3.2 Cleanup and Waste Disposal

-- End of Section Table of Contents --

SECTION 02763A

PAVEMENT MARKINGS
04/01

PART 1 GENERAL

1.1 REFERENCES

The publications listed below form a part of this specification to the extent referenced. The publications are referred to in the text by basic designation only.

U.S. GENERAL SERVICES ADMINISTRATION (GSA)FS TT-P-1952 (Rev D; Canc. Notice 1) Paint, Traffic and Airfield Marking, Waterborne (Metric)

1.2 SUBMITTALS

Government approval is required for submittals with a "G" designation; submittals not having a "G" designation are for information only. When used, a designation following the "G" designation identifies the office that will review the submittal for the Government. The following shall be submitted in accordance with Section 01330 SUBMITTAL PROCEDURES:

SD-03 Product Data

Equipment; G-RE,

Lists of proposed equipment, including descriptive data, and notifications of proposed Contractor actions as specified in this section. List of removal equipment shall include descriptive data indicating area of coverage per pass, pressure adjustment range, tank and flow capacities, and safety precautions required for the equipment operation.

Composition Requirements; ,

Manufacturer's current printed product description and Material Safety Data Sheets (MSDS) for each type paint/color proposed for use.

Qualifications; ,

Document certifying that personnel are qualified for equipment operation and handling of chemicals.

SD-06 Test Reports

Sampling and Testing; ,

Certified copies of the test reports, prior to the use of the materials at the jobsite. Testing shall be performed in an approved independent laboratory.

SD-07 Certificates

Volatile Organic Compound (VOC); ,

Certificate stating that the proposed pavement marking paint meets the VOC regulations of the local Air Pollution Control District having jurisdiction over the geographical area in which the project is located.

1.3 DELIVERY AND STORAGE

All materials shall be delivered and stored in sealed containers that plainly show the designated name, formula or specification number, batch number, color, date of manufacture, manufacturer's name, and directions, all of which shall be plainly legible at time of use.

1.4 EQUIPMENT

All machines, tools and equipment used in the performance of the work shall be approved and maintained in satisfactory operating condition. Equipment operating on roads and runways shall display low speed traffic markings and traffic warning lights.

1.4.1 Paint Application Equipment

The equipment to apply paint to pavements shall be a self-propelled or mobile-drawn pneumatic spraying machine with suitable arrangements of atomizing nozzles and controls to obtain the specified results. The machine shall have a speed during application not less than 5 mph, and shall be capable of applying the stripe widths indicated, at the paint coverage rate specified in paragraph APPLICATION, and of even uniform thickness with clear-cut edges. Equipment used for marking streets and highways shall be capable of placing the prescribed number of lines at a single pass as solid lines, intermittent lines or a combination of solid and intermittent lines using a maximum of two different colors of paint as specified. The paint applicator shall have paint reservoirs or tanks of sufficient capacity and suitable gauges to apply paint in accordance with requirements specified. Tanks shall be equipped with suitable air-driven mechanical agitators. The spray mechanism shall be equipped with quick-action valves conveniently located, and shall include necessary pressure regulators and gauges in full view and reach of the operator. Paint strainers shall be installed in paint supply lines to ensure freedom from residue and foreign matter that may cause malfunction of the spray guns. The paint applicator shall be readily adaptable for attachment of an air-actuated dispenser for the reflective media approved for use. Pneumatic spray guns shall be provided for hand application of paint in areas where the mobile paint applicator cannot be used.

1.4.2 Surface Preparation Equipment

1.4.2.1 Sandblasting Equipment

Sandblasting equipment shall include an air compressor, hoses, and nozzles of proper size and capacity as required for cleaning surfaces to be painted. The compressor shall be capable of furnishing not less than 150 cfm of air at a pressure of not less than 90 psi at each nozzle used, and shall be equipped with traps that will maintain the compressed air free of oil and water.

1.4.2.2 Waterblast Equipment

The water pressure shall be specified at 2600 psi at 140 degrees F in order to adequately clean the surfaces to be marked.

1.4.3 Marking Removal Equipment

Equipment shall be mounted on rubber tires and shall be capable of removing markings from the pavement without damaging the pavement surface or joint sealant. Waterblasting equipment shall be capable of producing an adjustable, pressurized stream of water. Sandblasting equipment shall include an air compressor, hoses, and nozzles. The compressor shall be equipped with traps to maintain the air free of oil and water.

1.4.3.1 Shotblasting Equipment

Shotblasting equipment shall be capable of producing an adjustable depth of removal of marking and pavement. Each unit shall be self-cleaning and self-contained, shall be able to confine dust and debris from the operation, and shall be capable of recycling the abrasive for reuse.

1.4.3.2 Chemical Equipment

Chemical equipment shall be capable of application and removal of chemicals from the pavement surface, and shall leave only non-toxic biodegradeable residue.

1.4.4 Traffic Controls

Suitable warning signs shall be placed near the beginning of the worksite and well ahead of the worksite for alerting approaching traffic from both directions. Small markers shall be placed along newly painted lines or freshly placed raised markers to control traffic and prevent damage to newly painted surfaces or displacement of raised pavement markers. Painting equipment shall be marked with large warning signs indicating slow-moving painting equipment in operation.

1.5 HAND-OPERATED, PUSH-TYPE MACHINES

All machines, tools, and equipment used in performance of the work shall be approved and maintained in satisfactory operating condition. Hand-operated push-type machines of a type commonly used for application of paint to pavement surfaces will be acceptable for marking small streets and parking areas. Applicator machine shall be equipped with the necessary paint tanks and spraying nozzles, and shall be capable of applying paint uniformly at coverage specified. Sandblasting equipment shall be provided as required for cleaning surfaces to be painted. Hand-operated spray guns shall be provided for use in areas where push-type machines cannot be used.

1.6 MAINTENANCE OF TRAFFIC

1.6.1 Roads, Streets, and Parking Areas

When traffic must be rerouted or controlled to accomplish the work, the necessary warning signs, flagpersons, and related equipment for the safe passage of vehicles shall be provided.

1.7 WEATHER LIMITATIONS FOR REMOVAL

Pavement surface shall be free of snow, ice, or slush. Surface temperature

shall be at least 40 degrees F and rising at the beginning of operations, except those involving shot or sand blasting. Operation shall cease during thunderstorms. Operation shall cease during rainfall, except for waterblasting and removal of previously applied chemicals. Waterblasting shall cease where surface water accumulation alters the effectiveness of material removal.

PART 2 PRODUCTS

2.1 PAINT

The paint shall be homogeneous, easily stirred to smooth consistency, and shall show no hard settlement or other objectionable characteristics during a storage period of 6 months. Paints for roads and streets shall conform to FS TT-P-1952, color as indicated . Pavement marking paints shall comply with applicable state and local laws enacted to ensure compliance with Federal Clean Air Standards. Paint materials shall conform to the restrictions of the local Air Pollution Control District.

2.2 SAMPLING AND TESTING

Materials proposed for use shall be stored on the project site in sealed and labeled containers, or segregated at source of supply, sufficiently in advance of needs to allow 60 days for testing. Upon notification by the Contractor that the material is at the site or source of supply, a sample shall be taken by random selection from sealed containers by the Contractor in the presence of a representative of the Contracting Officer. Samples shall be clearly identified by designated name, specification number, batch number, manufacturer's formulation number, project contract number, intended use, and quantity involved. Testing shall be performed in an approved independent laboratory. If materials are approved based on reports furnished by the Contractor, samples will be retained by the Government for possible future testing should the material appear defective during or after application.

PART 3 EXECUTION

3.1 SURFACE PREPARATION

Surfaces to be marked shall be thoroughly cleaned before application of the pavement marking material. Dust, dirt, and other granular surface deposits shall be removed by sweeping, blowing with compressed air, rinsing with water or a combination of these methods as required. Rubber deposits, surface laitance, existing paint markings, and other coatings adhering to the pavement shall be completely removed with scrapers, wire brushes, sandblasting, approved chemicals, or mechanical abrasion as directed. Areas of old pavement affected with oil or grease shall be scrubbed with several applications of trisodium phosphate solution or other approved detergent or degreaser, and rinsed thoroughly after each application. After cleaning, oil-soaked areas shall be sealed with cut shellac to prevent bleeding through the new paint. Pavement surfaces shall be allowed to dry, when water is used for cleaning, prior to striping or marking. Surfaces shall be recleaned, when work has been stopped due to rain.

3.1.1 Pretreatment for Early Painting

Where early painting is required on rigid pavements, a pretreatment with an aqueous solution containing 3 percent phosphoric acid and 2 percent zinc chloride shall be applied to prepared pavement areas prior to painting.

3.1.2 Cleaning Existing Pavement Markings

In general, markings shall not be placed over existing pavement marking patterns. Existing pavement markings, which are in good condition but interfere or conflict with the newly applied marking patterns, shall be removed. Deteriorated or obscured markings that are not misleading or confusing or interfere with the adhesion of the new marking material do not require removal. Whenever grinding, scraping, sandblasting or other operations are performed the work must be conducted in such a manner that the finished pavement surface is not damaged or left in a pattern that is misleading or confusing. When these operations are completed the pavement surface shall be blown off with compressed air to remove residue and debris resulting from the cleaning work.

3.1.3 Cleaning Concrete Curing Compounds

On new Portland cement concrete pavements, cleaning operations shall not begin until a minimum of 30 days after the placement of concrete. All new concrete pavements shall be cleaned by either sandblasting or water blasting. The extent of the blasting work shall be to clean and prepare the concrete surface as follows:

a. There is no visible evidence of curing compound on the peaks of the textured concrete surface.

b. There are no heavy puddled deposits of curing compound in the valleys of the textured concrete surface.

c. All remaining curing compound is intact; all loose and flaking material is removed.

d. The peaks of the textured pavement surface are rounded in profile and free of sharp edges and irregularities.

e. The surface to be marked is dry.

3.2 APPLICATION

All pavement markings and patterns shall be placed as shown on the plans.

3.2.1 Paint

Paint shall be applied to clean, dry surfaces, and only when air and pavement temperatures are above 40 degrees F and less than 95 degrees F. Paint temperature shall be maintained within these same limits. New Portland concrete cement shall be allowed to cure for a period of not less than 30 days before applications of paint. Paint shall be applied pneumatically with approved equipment at rate of coverage specified . The Contractor shall provide guide lines and templates as necessary to control paint application. Special precautions shall be taken in marking numbers, letters, and symbols. Edges of markings shall be sharply outlined.

3.2.1.1 Rate of Application

b. Nonreflective Markings: Paint shall be applied evenly to the pavement surface to be coated at a rate of 105 plus or minus 5 square feet per gallon.

3.2.1.2 Drying

The maximum drying time requirements of the paint specifications will be strictly enforced to prevent undue softening of bitumen, and pickup, displacement, or discoloration by tires of traffic. If there is a delay in drying of the markings, painting operations shall be discontinued until cause of the slow drying is determined and corrected.

3.3 MARKING REMOVAL

Pavement marking shall be removed in the areas shown on the drawings. Removal of marking shall be as complete as possible without damage to the surface. Aggregate shall not be exposed by the removal process. After the markings are removed, the cleaned pavement surfaces shall exhibit adequate texture for remarking as specified in paragraph SURFACE PREPARATION. Contractor shall demonstrate removal of pavement marking in an area designated by the Contracting Officer. The demonstration area will become the standard for the remainder of the work.

3.3.1 Equipment Operation

Equipment shall be controlled and operated to remove markings from the pavement surface, prevent dilution or removal of binder from underlying pavement, and prevent emission of blue smoke from asphalt or tar surfaces.

3.3.2 Cleanup and Waste Disposal

The worksite shall be kept clean of debris and waste from the removal operations. Cleanup shall immediately follow removal operations in areas subject to air traffic. Debris shall be disposed of at approved sites.

-- End of Section --

SECTION TABLE OF CONTENTS

DIVISION 02 - SITE WORK

SECTION 02821

FENCING

04/99

PART 1 GENERAL

1.1 REFERENCES
1.2 SUBMITTALS

PART 2 PRODUCTS

2.1 FENCE FABRIC
2.1.1 Chain Link Fence Fabric
2.2 POSTS
2.2.1 Metal Posts for Chain Link Fence
2.3 BRACES AND RAILS
2.4 WIRE
2.4.1 Tension Wire
2.5 ACCESSORIES
2.6 CONCRETE

PART 3 EXECUTION

3.1 INSTALLATION
3.2 EXCAVATION
3.3 POST INSTALLATION
3.3.1 Posts for Chain Link Fence
3.4 RAILS
3.4.1 Top Rail
3.5 BRACES AND TRUSS RODS
3.6 TENSION WIRES
3.7 CHAIN LINK FABRIC
3.8 BARBED WIRE SUPPORTING ARMS AND BARBED WIRE
3.8.1 General Requirements
3.9 GROUNDING

-- End of Section Table of Contents --

SECTION 02821

FENCING
04/99

PART 1 GENERAL

1.1 REFERENCES

The publications listed below form a part of this specification to the extent referenced. The publications are referred to in the text by basic designation only.

AMERICAN SOCIETY FOR TESTING AND MATERIALS (ASTM)

ASTM A 153/A 153M	(1998) Zinc-Coated (Hot Dip) on Iron and Steel Hardware
ASTM A 392	(1996) Zinc-Coated Steel Chain-Link Fence FabricASTM A 491 (1996) Aluminum-Coated Steel Chain-Link Fence FabricASTM A 780 (1993a) Repair of Damaged and Uncoated Areas of Hot-Dipped Galvanized Coatings
ASTM A 824	(1995) Metallic-Coated Steel Marcelled Tension Wire for Use With Chain Link Fence
ASTM C 94/C 94M	(2000) Ready-Mixed Concrete
ASTM F 626	(1996a) Fence FittingsASTM F 1043 (1999) Strength and Protective Coatings on Metal Industrial Chain-Link Fence Framework
ASTM F 1083	(1997) Specification for Pipe, Steel, Hot-Dipped Zinc-Coated (Galvanized) Welded, for Fence Structures

1.2 SUBMITTALS

Government approval is required for submittals with a "G" designation; submittals not having a "G" designation are for information only. When used, a designation following the "G" designation identifies the office that will review the submittal for the Government. The following shall be submitted in accordance with Section 01330 SUBMITTAL PROCEDURES:

SD-07 Certificates

Chain Link Fence; ,

Statement, signed by an official authorized to certify on behalf of the manufacturer, attesting that the chain link fence and component materials meet the specified requirements.

PART 2 PRODUCTS

2.1 FENCE FABRIC

Fence fabric shall conform to the following:

2.1.1 Chain Link Fence Fabric

ASTM A 392, Class 2, zinc-coated steel wire with minimum coating weight of 1.2 ounces of zinc per square foot of coated surface, or ASTM A 491, Type I, aluminum-coated steel wire. Fabric shall be fabricated of 9 gauge wire woven in 2 inch mesh. Fabric height shall be 6 feet . Fabric shall be twisted and barbed on the top selvage and knuckled on the bottom selvage.

2.2 POSTS

2.2.1 Metal Posts for Chain Link Fence

ASTM F 1083, zinc-coated. Group IA, with external coating Type A steel pipe. Group IC steel pipe, zinc-coated with external coating Type A or Type B and Group II , formed steel sections, shall meet the strength and coating requirements of ASTM F 1043. Group III, ASTM F 1043 steel H-section may be used for line posts in lieu of line post shapes specified for the other classes. Sizes shall be as shown on the drawings. Line posts and terminal (corner, gate, and pull) posts selected shall be of the same designation throughout the fence. Gate post shall be for the gate type specified subject to the limitation specified in ASTM F 900 and/or ASTM F 1184.

2.3 BRACES AND RAILS

ASTM F 1083, zinc-coated, Group IA, steel pipe, size NPS 1-1/4. Group IC steel pipe, zinc-coated, shall meet the strength and coating requirements of ASTM F 1043. Group II, formed steel sections, size 1-21/32 inch, conforming to ASTM F 1043, may be used as braces and rails if Group II line posts are furnished.

2.4 WIRE

2.4.1 Tension Wire

Tension wire shall be Type I or Type II, Class 2 coating, in accordance with ASTM A 824.

2.5 ACCESSORIES

ASTM F 626. Ferrous accessories shall be zinc or aluminum coated. Truss rods shall be furnished for each terminal post. Truss rods shall be provided with turnbuckles or other equivalent provisions for adjustment. Barbed wire shall be 2 strand, 12-1/2 gauge wire, zinc-coated, Class 3 in accordance with ASTM A 121 or aluminum coated Type I in accordance with ASTM A 585. Barbed wire shall be four-point barbed type steel wire. Barbed wire support arms shall be the single arm type and of the design required for the post furnished. Tie wire for attaching fabric to rails, braces, and posts shall be 9 gauge steel wire and match the coating of the fence fabric. Tie wires for attaching fabric to tension wire on high security fences shall be 16 gage stainless steel. The tie wires shall be a double loop and 6.5 inches in length. Miscellaneous hardware coatings shall conform to ASTM A 153/A 153M unless modified.

2.6 CONCRETE

ASTM C 94/C 94M, using 3/4 inch maximum size aggregate, and having minimum compressive strength of 3000 psi at 28 days. Grout shall consist of one part portland cement to three parts clean, well-graded sand and the minimum amount of water to produce a workable mix.

PART 3 EXECUTION

3.1 INSTALLATION

Fence shall be installed to the lines and grades indicated. The area on either side of the fence line shall be cleared to the extent indicated. Line posts shall be spaced equidistant at intervals not exceeding 10 feet. Terminal (corner, gate, and pull) posts shall be set at abrupt changes in vertical and horizontal alignment. Fabric shall be continuous between terminal posts; however, runs between terminal posts shall not exceed 500 feet. Any damage to galvanized surfaces, including welding, shall be repaired with paint containing zinc dust in accordance with ASTM A 780.

3.2 EXCAVATION

Post holes shall be cleared of loose material. Waste material shall be spread where directed. The ground surface irregularities along the fence line shall be eliminated to the extent necessary to maintain a 2 inch clearance between the bottom of the fabric and finish grade.

3.3 POST INSTALLATION

3.3.1 Posts for Chain Link Fence

Posts shall be set plumb and in alignment. Except where solid rock is encountered, posts shall be set in concrete to the depth indicated on the drawings. Posts set in concrete shall be set in holes not less than the diameter shown on the drawings. Concrete shall be thoroughly consolidated around each post, shall be free of voids and finished to form a dome. Concrete shall be allowed to cure for 72 hours prior to attachment of any item to the posts.

3.4 RAILS

3.4.1 Top Rail

Top rail shall be supported at each post to form a continuous brace between terminal posts. Where required, sections of top rail shall be joined using sleeves or couplings that will allow expansion or contraction of the rail.

3.5 BRACES AND TRUSS RODS

Braces and truss rods shall be installed as indicated and in conformance with the standard practice for the fence furnished. Horizontal (compression) braces and diagonal truss (tension) rods shall be installed on fences over 6 feet in height. A center brace or 2 diagonal truss rods shall be installed on 12 foot fences. Braces and truss rods shall extend from terminal posts to line posts. Diagonal braces shall form an angle of approximately 40 to 50 degrees with the horizontal. No bracing is required on fences 6 feet high or less if a top rail is installed.

3.6 TENSION WIRES

Tension wires shall be installed along the bottom of the fence line and attached to the terminal posts of each stretch of the fence. Bottom tension wire shall be installed within the bottom 6 inches of the installed fabric. Tension wire shall be pulled taut and shall be free of sag.

3.7 CHAIN LINK FABRIC

Chain link fabric shall be installed on the side of the post indicated. Fabric shall be attached to terminal posts with stretcher bars and tension bands. Bands shall be spaced at approximately 15 inch intervals. The fabric shall be installed and pulled taut to provide a smooth and uniform appearance free from sag, without permanently distorting the fabric diamond or reducing the fabric height. Fabric shall be fastened to line posts at approximately 15 inch intervals and fastened to all rails and tension wires at approximately 24 inch intervals. Fabric shall be cut by untwisting and removing pickets. Splicing shall be accomplished by weaving a single picket into the ends of the rolls to be joined. The bottom of the installed fabric shall be 2 plus or minus 1/2 inch above the ground. For high security fence, after the fabric installation is complete, the fabric shall be exercised by applying a 50 pound push-pull force at the center of the fabric between posts; the use of a 30 pound pull at the center of the panel shall cause fabric deflection of not more than 2-1/2 inches when pulling fabric from the post side of the fence; every second fence panel shall meet this requirement; all failed panels shall be resecured and retested at the Contractor's expense.

3.8 BARBED WIRE SUPPORTING ARMS AND BARBED WIRE

3.8.1 General Requirements

Barbed wire supporting arms and barbed wire shall be installed as indicated and as recommended by the manufacturer. Supporting arms shall be anchored to the posts in a manner to prevent easy removal with hand tools Barbed wire shall be pulled taut and attached to the arms with clips or other means that will prevent easy removal.

3.9 GROUNDING

Fences shall be grounded at each corner, at the closest approach to each building located within 50 feet of the fence, and where the fence alignment changes more than 15 degrees. Grounding locations shall not exceed 650 feet. Each gate panel shall be bonded with a flexible bond strap to its gate post. Fences crossed by powerlines of 600 volts or more shall be grounded at or near the point of crossing and at distances not exceeding 150 feet on each side of crossing. Ground conductor shall consist of No. 8 AWG solid copper wire. Grounding electrodes shall be 3/4 inch by 10 foot long copper-clad steel rod. Electrodes shall be driven into the earth so that the top of the electrode is at least 6 inches below the grade. Where driving is impracticable, electrodes shall be buried a minimum of 12 inches deep and radially from the fence. The top of the electrode shall be not less than 2 feet or more than 8 feet from the fence. Ground conductor shall be clamped to the fence and electrodes with bronze grounding clamps to create electrical continuity between fence posts, fence fabric, and ground rods. After installation the total resistance of fence to ground shall not be greater than 25 ohms.

-- End of Section --

SECTION TABLE OF CONTENTS

DIVISION 02 - SITE WORK

SECTION 02832

SEGMENTAL CONCRETE BLOCK GRAVITY RETAINING WALL

08/99

PART 1 GENERAL

1.1 REFERENCES
1.2 DEFINITIONS
1.3 SUBMITTALS
1.4 CONTRACTOR QUALIFICATIONS
1.5 SUPPLIER QUALIFICATIONS
1.6 DELIVERY, STORAGE AND HANDLING
1.6.1 Segmental Concrete Units and Wall Caps

PART 2 PRODUCTS

2.1 SEGMENTAL CONCRETE UNITS
2.1.1 Architectural Requirements
2.1.2 Structural Requirements
2.1.3 Wall Caps
2.2 GEOTEXTILE FILTER
2.3 SOILS AND AGGREGATES
2.4 MASONRY ADHESIVE
2.6 DRAINAGE PIPE

PART 3 EXECUTION

3.1 EARTHWORK
3.1.1 Excavation
3.1.2 Stockpiles
3.2 LEVELING PAD
3.2.1 Aggregate Base Leveling Pad
3.3 BLOCK INSTALLATION
3.4 FILL PLACEMENT
3.5 COMPACTION
3.5.1 Degree of Compaction
3.5.2 Moisture Control
3.5.3 Compaction
3.6 DRAINAGE PIPE
3.7 CONSTRUCTION TOLERANCES
3.8 PROTECTION OF WORK

-- End of Section Table of Contents --

SECTION 02832

SEGMENTAL CONCRETE BLOCK GRAVITY RETAINING WALL
08/99

PART 1 GENERAL

1.1 REFERENCES

The publications listed below form a part of the specification to the extent referenced. The publications are referred to in the text by basic designation only.

AMERICAN ASSOCIATION OF STATE HIGHWAY AND TRANSPORTATION OFFICIALS (AASHTO)

AASHTO M 252	(1996) Corrugated Polyethylene Drainage Tubing
AASHTO M 288	(1996) Geotextiles Used for Subsurface Drainage Purposes

AMERICAN SOCIETY FOR TESTING AND MATERIALS (ASTM)

ASTM C 140	(1997) Sampling and Testing Concrete Masonry Units
ASTM C 920	(1998) Elastomeric Joint Sealants
ASTM C 1262	(1997) Evaluating the Freeze-Thaw Durability of Manufactured Concrete Masonry Units and Related Concrete Units
ASTM C 1372	(1997) Segmental Retaining Wall Units
ASTM D 448	(1986; R 1993) Sizes of Aggregate for Road and Bridge Construction
ASTM D 698	(1998) Laboratory Compaction Characteristics of Soil Using Standard Effort (12,400 ft-lbf/cu. ft. (600 kN-m/cu. m.))
ASTM D 1241	(1968; R 1994) Materials for Soil-Aggregate Subbase, Base, and Surface Courses
ASTM D 4491	(1996) Water Permeability of Geotextiles by Permittivity
ASTM D 4632	(1991; R 1996) Grab Breaking Load and Elongation of Geotextiles
ASTM D 4751	(1995) Determining Apparent Opening Size of a Geotextile

1.2 DEFINITIONS

a. Blocks. Segmental concrete retaining wall units will be referred to as blocks.

b. Drainage Aggregate. Granular soil or aggregate which is placed within, between, and/or immediately behind segmental concrete units.

c. Fill. Soil or aggregate placed in, behind, or below the wall will be referred to as fill.

1.3 SUBMITTALS

Government approval is required for submittals with a "G" designation; submittals not having a "G" designation are for information only. When used, a designation following the "G" designation identifies the office that will review the submittal for the Government. The following shall be submitted in accordance with Section 01330 SUBMITTAL PROCEDURES:

SD-02 Shop Drawings

Shop Drawings; G-RE

The fabrication and installation drawings shall be submitted. If approved by the Contracting Officer, shop drawings may consist of marked up contract drawings showing exact dimensions for the blocks supplied, required coping, and other minor revisions.

SD-03 Product Data

Manufacturer's Data; G-RE

The Contractor shall submit descriptive technical data on the blocks, wall caps, and masonry adhesive. The submittal shall include all material properties specified under paragraph PRODUCTS. The submittal shall also include a copy of any standard manufacturer's warranties for the products.

Qualifications; G-RE

The Contractor shall provide documentation showing that the installer and supplier meet the qualifications listed.

1.4 CONTRACTOR QUALIFICATIONS

The job foreman or the company directly responsible for the wall installation shall have at least 2 years experience.

1.5 SUPPLIER QUALIFICATIONS

Suppliers of segmental retaining wall system components shall have demonstrated experience in the supply of similar size and types of segmental retaining walls on previous projects.

1.6 DELIVERY, STORAGE AND HANDLING

The Contractor shall check products upon delivery to assure that the proper material has been received and is undamaged.

1.6.1 Segmental Concrete Units and Wall Caps

The Contractor shall protect blocks from damage and exposure to cement, paint, excessive mud, and like materials. The Contractor shall check materials upon delivery to assure that the block dimensions are within the tolerances specified.

PART 2 PRODUCTS

2.1 SEGMENTAL CONCRETE UNITS

2.1.1 Architectural Requirements

a. Face color - Grey or Natural Limestone.

b. Face Texture - split face typical of broken mortar/brick face.

c. Face Appearance - straight, single-surface face; or sculptured with 3-surface beveled face; or rounded, smooth-curved face.

d. Batter - Blocks shall be engaged to the block below by use of keys, lips, pins, clips, or other reliable mechanism to provide a consistent wall batter, as shown on the drawings, and to provide a shear connection between courses of block .

e. Block Size - a minimum of 2/3 square feet of face area, and minimum 6 inch height.

f. Bond configuration - Blocks shall be designed to stack with a half-bond (joints located at midpoint of vertically adjacent blocks). The block edges shall be finished so that vertical joints are flush.

2.1.2 Structural Requirements

The Contractor shall submit shop drawings of concrete blocks and interlocking mechanism for approval. The blocks shall be manufactured to the requirements of ASTM C 1372, except for the following modifications:

a. Minimum 28-day compressive strength of 3,000 psi, based on net area in accordance with ASTM C 140.

b. A maximum moisture absorption rate of 9 pcf, in accordance with ASTM C 140.

c. The minimum oven dry density of concrete shall be 125 pcf.

d. The blocks shall provide a minimum of 80 pounds per square foot of wall face area (determined without void filling).

e. For freeze-thaw durability tested in accordance with ASTM C 1262, specimens shall comply with either of the following: (1) the weight loss of each of 5 specimens after 100 cycles shall not exceed 1 percent; or (2) the weight loss of each of 5 specimens after 150 cycles shall not exceed 1.5 percent.

2.1.3 Wall Caps

Segmental concrete block units shall be placed as caps on top of all segmental concrete retaining walls. The cap blocks shall have a color and texture on exposed faces to match that of the other blocks and meet the

requirements for the other blocks except that the minimum height shall be 3 inches. Each cap block shall have abutting edges saw cut or formed to provide tight, flush abutting joints with no gaps in the joints when placed end to end.

2.2 GEOTEXTILE FILTER

Geotextiles used as filters shall meet the requirements specified in Table 2. The property values (except for AOS) represent minimum average roll values (MARV) in the weakest principal direction. For survivability during installation, the geotextile shall meet the minimum requirements in AASHTO M 288 Class 2, and shall have a minimum mass per unit area of 8 oz/sy.

TABLE 2. GEOTEXTILE PHYSICAL PROPERTIES

PROPERTY	TEST REQUIREMENT	TEST METHOD
Grab Tensile, lbs.	160 nonwoven 250 woven	ASTM D 4632
Apparent Opening Size (U.S. Sieve)	70 - 100	ASTM D 4751
Permittivity, sec-1	0.5	ASTM D 4491

2.3 SOILS AND AGGREGATES

All material placed as fill shall meet the requirements of "suitable fill" as defined in specification section 02315 EXCAVATION, FILLING AND BACKFILLING FOR STRUCTURES.

a. Drainage Aggregate shall meet the requirements of ASTM D 448, size No.7.

b. Aggregate Base material for the wall leveling pads shall meet the requirements of ASTM D 1241, gradation C.

2.4 MASONRY ADHESIVE

The masonry adhesive shall meet the following requirements:

a. ASTM C 920, Type S, Grade NS, Class 25
b. expected 30 year life
c. meet the recommendations of the block manufacturer

2.6 DRAINAGE PIPE

The drainage pipe shall be corrugated polyethylene pipe meeting requirements of AASHTO M 252.

PART 3 EXECUTION

3.1 EARTHWORK

The leveling pad and reinforced fill zone shall bear on undisturbed native soils, or acceptably placed and compacted fill. In the event that it is necessary to remove material to a depth greater than specified or to place fill below the leveling pad not otherwise provided for in the contract, the

Contracting Officer shall be notified prior to work and an adjustment in the contract price will be considered in accordance with the contract. Additional work not authorized by the Contracting Officer shall be at the Contractor's expense.

3.1.1 Excavation

Foundation soil shall be excavated as required for leveling pad dimensions and reinforcement placement shown on the construction drawings. Material for backfilling shall be stockpiled in a neat and orderly manner at a sufficient distance from the banks of the excavation to avoid overloading and to prevent slides or caving. Excavation and fill shall be performed in a manner and sequence that will provide proper drainage at all times. The Contractor is responsible for disposal of surplus material, waste material, and material that does not meet specifications, including any soil which is disturbed by the Contractor's operations or softened due to exposure to the elements and water.

3.1.2 Stockpiles

Stockpiles of all material to be incorporated into the work shall be kept in a neat and well drained condition, giving due consideration to drainage at all times. The ground surface at stockpile locations shall be cleared, grubbed, and sealed. Topsoil shall be stockpiled separately from suitable backfill material. Stockpiles of aggregates and granular soils shall be protected from contamination which may destroy the quality and fitness of the stockpiled material. If the Contractor fails to protect the stockpiles, and any material becomes frozen, saturated, intermixed with other materials, or otherwise out of specification or unsatisfactory for the use intended, such material shall be removed and replaced with new material from approved sources at no additional cost to the Government.

3.2 LEVELING PAD

3.2.1 Aggregate Base Leveling Pad

The subgrade below the leveling pad shall be compacted with at least 3 passes with a vibratory plate compactor with an operating weight not less than 450 pounds. The aggregate base material shall be placed in lifts not exceeding 6 inches and compacted with at least 3 passes with a vibratory plate compactor. If the subgrade or aggregate base pumps, bleeds water, or cracks during compaction, the Contracting Officer shall be notified.

3.3 BLOCK INSTALLATION

The wall system components shall be constructed in accordance with the wall supplier's recommendations and construction manual. Damaged blocks shall not be incorporated in the retaining wall.

a. Block placement shall begin at the lowest leveling pad elevation. The blocks shall be in full contact with the leveling pad. Each course of block shall be placed sequentially for the entire wall alignment to maintain a level working platform for layout and placement of fill.

b. The grade and alignment of the first course shall be prior to placing the second course. Survey control for alignment shall include a string line, offset from a base line, or suitable provisions that can be reproduced for quality assurance.

c. The blocks shall be placed with the edges in tight contact. No gap shall be allowed for wall batter and curvature. The vertical joints shall be maintained with a minimum 4 inch overlap on the underlying block. Coping required to keep block alignment shall be done with a full depth saw cut. No splitting shall be allowed.

d. Stacking of blocks prior to filling any lower course of block with drainage aggregate will not be allowed.

e. Cap units shall be joined using masonry adhesive. Care shall be taken to keep adhesive from coming into contact with the face of wall units.

3.4 FILL PLACEMENT

a. Fill placement, including drainage aggregate, shall be completed to the top of each course of facing blocks prior to stacking the subsequent course of blocks.

b. Drainage aggregate shall be placed and tamped directly behind, between, and within the cells of the facing units. Compaction of the drainage aggregate shall be achieved by at least two passes on each lift with a vibratory plate compactor. Care shall be taken not to contact or chip the blocks with the compactor. Aggregate placed within the block cores and recesses shall be compacted by hand tamping and rodding.

c. At the end of each day, the Contractor shall slope the last lift of fill away from the wall in a manner that will allow drainage and direct runoff away from the wall face.

3.5 COMPACTION

Fill shall not be placed on surfaces that contain mud, frost, organic soils, fill soils that have not met compaction requirements, or where the Contracting Officer determines that unsatisfactory material remains in or under the fill. Fill shall be spread and compacted in lifts not exceeding the height of one course of blocks.

3.5.1 Degree of Compaction

Degree of compaction required is expressed as a percentage of the maximum density obtained by the test procedure presented in ASTM D 698. The maximum density is hereafter abbreviated as the "Standard Proctor" value.

3.5.2 Moisture Control

Control of moisture in the fill shall be maintained to provide acceptable compaction. Disking and plowing will not be allowed in the reinforced fill zone. Moisture content of cohesive soils shall be adjusted at the borrow source before placement. Adding water directly to the reinforced fill zone shall only be conducted under conditions where the soil has sufficient porosity and capillarity to provide uniform moisture throughout the fill during compaction.

3.5.3 Compaction

Fill shall be compacted to 95 percent of the Standard Proctor Density. Care shall be exercised in the compaction process to avoid misalignment of

the facing blocks. Heavy compaction equipment (including vibratory drum rollers) shall not be used within 3 feetfrom the wall face.

3.6 DRAINAGE PIPE

Drain pipe shall be placed as indicated on the drawings. Drain lines shall be laid to true grades and alignment with a continuous fall in the direction of flow. The interior of the pipe shall be kept clean from soil and debris; and open ends shall be temporarily capped as necessary.

3.7 CONSTRUCTION TOLERANCES

a. Horizontal: The top of wall shall be within 3 inches of the plan location.

b. Vertical: The top of wall elevations shall be within 0.1 feet above to 0.1 feet below the prescribed top of wall elevations shown on the drawings.

c. Plumbness and Alignment: The wall batter and alignment offset measured as deviation from a straight edge shall be within plus or minus 1.25 inches per 10 feet section. The batter measured from vertical shall be within 2 degrees of the plan dimension.

d. Block Defects: The blocks will be accepted on the basis of tolerances specified in ASTM C 1372.

e. Block Gaps: Gaps between adjacent blocks shall not exceed 1/8 inches.

3.8 PROTECTION OF WORK

Work shall be protected against damage from subsequent operations. Disturbed or displaced blocks shall be removed and replaced to conform to all requirements of this section. Damaged material shall not be incorporated into the wall. Upon completion of wall erection, the Contractor shall clean the wall face to remove any loose soil deposits or stains.

-- End of Section --

SECTION TABLE OF CONTENTS

DIVISION 02 - SITE WORK

SECTION 02921

SEEDING

06/98

PART 1 GENERAL

1.1 REFERENCES
1.2 SUBMITTALS
1.3 SOURCE INSPECTION
1.4 DELIVERY, INSPECTION, STORAGE, AND HANDLING
1.4.1 Delivery
1.4.1.1 Delivered Topsoil
1.4.1.2 Soil Amendments
1.4.1.3 Pesticides
1.4.2 Inspection
1.4.3 Storage
1.4.4 Handling

PART 2 PRODUCTS

2.1 SEED
2.1.1 Seed Classification
2.1.2 Permanent Seed Species and Mixtures
2.1.3 Temporary Seed Species
2.1.4 Quality
2.1.5 Seed Mixing
2.1.6 Substitutions
2.2 TOPSOIL
2.3 SOIL AMENDMENTS
2.3.1 Fertilizer
2.4 MULCH
2.4.1 Prairie Hay
2.5 WATER
2.6 PESTICIDE
2.7 SURFACE EROSION CONTROL MATERIAL
2.7.1 Surface Erosion Control Blanket
2.7.2 Erosion Control Material Anchors

PART 3 EXECUTION

3.1 INSTALLING SEED TIME AND CONDITIONS
3.1.1 Seeding Time
3.1.2 Seeding Conditions
3.1.3 Equipment Calibration
3.2 SITE PREPARATION
3.2.1 Finished Grade and Topsoil
3.2.2 Application of Soil Amendments
3.2.2.1 Applying Fertilizer
3.2.3 Tillage
3.2.4 Prepared Surface

3.2.4.1 Preparation
3.2.4.2 Field Area Debris
3.2.4.3 Protection
3.3 INSTALLATION
3.3.1 Installing Seed
3.3.1.1 Broadcast Seeding
3.3.1.2 Drill Seeding
3.3.1.3 Rolling
3.3.2 Mulching
3.3.2.1 Mulching
3.3.3 Watering Seed
3.4 SURFACE EROSION CONTROL
3.4.1 Surface Erosion Control Material
3.4.2 Temporary Seeding
3.4.2.1 Soil Amendments
3.4.2.2 Remaining Soil Amendments
3.5 QUANTITY CHECK
3.6 APPLICATION OF PESTICIDE
3.6.1 Technical Representative
3.6.2 Application
3.7 RESTORATION AND CLEAN UP
3.7.1 Restoration
3.7.2 Clean Up
3.8 PROTECTION OF INSTALLED AREAS
3.9 SEED ESTABLISHMENT PERIOD
3.9.1 Commencement
3.9.2 Satisfactory Stand of Grass Plants
3.9.2.1 Field Seeded Areas
3.9.3 Maintenance During Establishment Period
3.9.3.1 Mowing and Weed Control
3.9.3.2 Pesticide Treatment
3.9.3.3 Repair or Reinstall
3.9.3.4 Maintenance Record
3.10 TURF ESTABLISHMENT FOR DISTURBED AREAS (AREAS OUTSIDE OF REQUIRED GRADING AREAS)

-- End of Section Table of Contents --

SECTION 02921

SEEDING
06/98

PART 1 GENERAL

1.1 REFERENCES

The publications listed below form a part of this specification to the extent referenced. The publications are referred to in the text by basic designation only.

AGRICULTURAL MARKETING SERVICE (AMS)

AMS-01	(Aug 95) Federal Seed Act Regulations Part 201

AMERICAN SOCIETY FOR TESTING AND MATERIALS (ASTM)

ASTM D 5268	(1992; R 1996) Topsoil Used for Landscaping Purposes

1.2 SUBMITTALS

Government approval is required for submittals with a "G" designation; submittals not having a "G" designation are for information only. When used, a designation following the "G" designation identifies the office that will review the submittal for the Government. The following shall be submitted in accordance with Section 01330 SUBMITTAL PROCEDURES:

SD-01 Preconstruction Submittals

Equipment;

A listing of equipment to be used for the seeding operation.

Delivery;

Delivery schedule.

Finished Grade and Topsoil;

Finished grade status.

Topsoil;

Availability of topsoil from the stripping and stockpiling operation.

SD-03 Product Data

Equipment;
Surface Erosion Control Material;
Chemical Treatment Material; G-RE.

Manufacturer's literature including physical characteristics, application and installation instructions for equipment, surface erosion control material, and chemical treatment material.

SD-04 Samples

Delivered Topsoil;

Samples taken from several locations at the source.

Soil Amendments;

A 10 pound sample.

Mulch;

A 10 pound sample.

SD-06 Test Reports

Equipment Calibration;

Certification of calibration tests conducted on the equipment used in the seeding operation.

SD-07 Certificates

Seed; G-RE.
Topsoil;
Fertilizer;
Mulch;
Pesticide; G-RE.

Prior to purchasing of seed a complete listing of seed varieties (common name and botanical name) available for use. Prior to the delivery of materials, certificates of compliance attesting that materials meet the specified requirements. Certified copies of the material certificates shall include the following:

a. Seed. Classification, botanical name, common name, percent pure live seed, minimum percent germination and hard seed, maximum percent weed seed content, and date tested. Signed statement certifying that seed mixtures have been tested within the last 6 months prior to the date of delivery for seed type, and weed content.

b. Topsoil. Particle size, pH, organic matter content, textural class, soluble salts, chemical and mechanical analyses.

c. Fertilizer. Chemical analysis and composition percent.

d. Mulch. Composition and source.

e. Pesticide. EPA registration number and registered uses.

SD-11 Closeout Submittals

Quantity Check; .

Bag count or bulk weight measurements of material used compared with area covered to determine the application rate and quantity installed.

Seed Establishment Period;

Calendar time period for the seed establishment period. When there is more than one seed establishment period, the boundaries of the seeded area covered for each period shall be described.

Maintenance Record;

Maintenance work performed, area repaired or reinstalled, diagnosis for unsatisfactory stand of grass plants.

Application of Pesticide; G-RE.

Pesticide treatment plan with sequence of treatment work with dates and times. The pesticide trade name, EPA registration number, chemical composition, formulation, concentration of original and diluted material, application rate of active ingredients, method of application, area treated, amount applied; and the name and state license number of the state certified applicator shall be included.

1.3 SOURCE INSPECTION

The source of delivered topsoil shall be subject to inspection.

1.4 DELIVERY, INSPECTION, STORAGE, AND HANDLING

1.4.1 Delivery

A delivery schedule shall be provided at least 10 calendar days prior to the first day of delivery.

1.4.1.1 Delivered Topsoil

Prior to the delivery of any topsoil, its availability shall be verified in paragraph TOPSOIL.

1.4.1.2 Soil Amendments

Soil amendments shall be delivered to the site in the original, unopened containers bearing the manufacturer's chemical analysis. In lieu of containers, soil amendments may be furnished in bulk. A chemical analysis shall be provided for bulk deliveries.

1.4.1.3 Pesticides

Pesticide material shall be delivered to the site in the original, unopened containers bearing legible labels indicating the EPA registration number and the manufacturer's registered uses.

1.4.2 Inspection

Seed shall be inspected upon arrival at the job site for conformity to species and quality. Seed that is wet, moldy, or bears a test date five months or older, shall be rejected. Other materials shall be inspected for compliance with specified requirements. The following shall be rejected: open soil amendment containers or wet soil amendments; topsoil that

contains slag, cinders, stones, lumps of soil, sticks, roots, trash or other material over a minimum 1-1/2 inch diameter; and topsoil that contains viable plants and plant parts. Unacceptable materials shall be removed from the job site.

1.4.3 Storage

Materials shall be stored in designated areas. Seed fertilizer shall be stored in cool, dry locations away from contaminants. Chemical treatment material shall be stored according to manufacturer's instructions and not with seeding operation materials.

1.4.4 Handling

Except for bulk deliveries, materials shall not be dropped or dumped from vehicles.

PART 2 PRODUCTS

2.1 SEED

2.1.1 Seed Classification

State-certified seed of the latest season's crop shall be provided in original sealed packages bearing the producer's guaranteed analysis for percentages of mixture, purity, germination, hard seed, weed seed content, and inert material. Labels shall be in conformance with AMS-01 and applicable state seed laws. Seed mixtures shall be free from any State listed noxious weeds including but not limited to Russian or Canadian Thistle, European Bindweed, Johnson Grass, and Leafy Spurge.

2.1.2 Permanent Seed Species and Mixtures

Permanent seed species and mixtures shall be proportioned by weight: Computation of quantity of seed required is based on the percent of purity and percent of germination. Pounds of pure live seed (PLS) = pounds of seed x germination x purity.

Seed Mixture "A" Drill seed the following grasses.

Seed Variety	% of Mixture	Pounds PLS/Acre
Grasses		
K-31 Fescue	40	20.0
Smooth Brome Grass	40	20.0
Common Oats	20	10.0

Total 50.0 lbs PLS/acre

Seed Mixture "B" Drill seed the following grasses.

Seed Variety	% of Mixture	Pounds PLS/Acre
Grasses		
Big Bluestem	14	3.6
Canada Wildrye	7	1.8
Virginia Wildrye	7	1.8
Indian Grass	11	2.7
Little Bluestem	11	2.7

Switchgrass	5	1.2
SideOats Grama	5	1.2
Common Oats	40	10.0

Total 25.0 lbs PLS/acre

Wildflowers "B" Drill seed flower seeds with Seed Mix "B" grasses

Illinois Bundleflower - Inoculated	0.6
Roundhead Lespedeza - Inoculated	0.25
Blue Flax	3.0
Blackeyed Susan	0.75
Upright Prairie Coneflower	1.0
Partridge Pea - Platte	0.75
Pitcher Sage	0.6
Mexican Hat	1.0
Plains Coreopsis	0.5

Total 8.45 lbs/acre

2.1.3 Temporary Seed Species

Temporary seed species for surface erosion control or overseeding shall be as follows: Common Oats seeded at a rate of 10 lbs per acre

2.1.4 Quality

Weed seed shall be a maximum 1 percent by weight of the total mixture.

2.1.5 Seed Mixing

The mixing of seed may be done by the seed supplier prior to delivery.

2.1.6 Substitutions

Substitutions will not be allowed without written request and approval from the Contracting Officer.

2.2 TOPSOIL

Topsoil shall be as defined in ASTM D 5268 and as specified in Section 02215 TOPSOIL. When available, the topsoil shall be the existing surface soil stripped and stockpiled onsite. When additional topsoil is required beyond the available topsoil from the stripping operation, topsoil shall be delivered and amended as needed. Topsoil shall be free from slag, cinders, stones, lumps of soil, sticks, roots, trash or other material over a minimum 2 inch diameter. Topsoil shall be free from viable plants and plant parts.

2.3 SOIL AMENDMENTS

Soil amendments shall consist of fertilizer meeting the following requirements.

2.3.1 Fertilizer

The nutrient ratio shall be 18 percent Nitrogen, 46 percent Phosphorous, 0 percent Potassium. Fertilizer shall be controlled release commercial grade, free flowing, uniform in composition, and consist of a

nitrogen-phosphorus-potassium ratio. The fertilizer shall be derived from sulphur coated urea, urea formaldehyde, plastic or polymer coated pills, or isobutylenediurea (IBDU). Fertilizer shall be balanced with the inclusion of trace minerals and micro-nutrients.

2.4 MULCH

Mulch shall be free from weeds, mold, and other deleterious materials. Mulch materials shall be native to the region.

2.4.1 Prairie Hay

Hay shall be native prairie hay furnished in an air-dry condition suitable for placing with commercial mulch-blowing equipment. Hay shall be free of noxious weeds, mold or other objectionable material.

2.5 WATER

Water shall be the responsibility of the Contractor, unless otherwise noted. Water shall not contain elements toxic to plant life.

2.6 PESTICIDE

Pesticide shall be insecticide, herbicide, fungicide, nematocide, rodenticide or miticide. For the purpose of this specification, a soil fumigant shall have the same requirements as a pesticide. The pesticide material shall be EPA registered and approved.

2.7 SURFACE EROSION CONTROL MATERIAL

Surface erosion control material shall conform to the following:

2.7.1 Surface Erosion Control Blanket

Blanket shall be machine produced mat of knitted straw covered on both sides with a degradable plastic mesh or interwoven degradable thread. Blanket shall be the same as or equal to model SC150 as produced by North American Green or model SCFB2 by Contech Construction Products.

2.7.2 Erosion Control Material Anchors

Erosion control anchors shall be as recommended by the manufacturer.

PART 3 EXECUTION

3.1 INSTALLING SEED TIME AND CONDITIONS

3.1.1 Seeding Time

Seed shall be installed from March 1 to May 30 for spring establishment; and from September 1 to November 15 for fall establishment.

3.1.2 Seeding Conditions

Seeding operations shall be performed only during periods when beneficial results can be obtained. When drought, excessive moisture, or other unsatisfactory conditions prevail, the work shall be stopped when directed. When special conditions warrant a variance to the seeding operations, proposed alternate times shall be submitted for approval.

3.1.3 Equipment Calibration

Immediately prior to the commencement of seeding operations, calibration tests shall be conducted on the equipment to be used. These tests shall confirm that the equipment is operating within the manufacturer's specifications and will meet the specified criteria. The equipment shall be calibrated a minimum of once every day during the operation. The calibration test results shall be provided within 1 week of testing.

3.2 SITE PREPARATION

3.2.1 Finished Grade and Topsoil

The Contractor shall verify that finished grades are as indicated on drawings, and the placing of topsoil, smooth grading, and compaction requirements have been completed prior to the commencement of the seeding operation. Prior to seeding operations the soil shall be tilled to a depth of no less than 6 inches to allow root penetration in all areas that have been compacted by construction equipment.

3.2.2 Application of Soil Amendments

3.2.2.1 Applying Fertilizer

Fertilizer shall be applied at the rate of no less than 200 pounds per acre. Fertilizer shall be incorporated into the soil to a maximum 4 inches depth or may be incorporated as part of the tillage operation.

3.2.3 Tillage

Soil on slopes up to a maximum 3-horizontal-to-1-vertical shall be tilled to a minimum 4 inch depth. On slopes between 3-horizontal-to-1-vertical and 1-horizontal-to-1 vertical, the soil shall be tilled to a minimum 2 inch depth by scarifying with heavy rakes, or other method. Rototillers shall be used where soil conditions and length of slope permit. On slopes 1-horizontal-to-1 vertical and steeper, no tillage is required. Drainage patterns shall be maintained as indicated on drawings. Areas compacted by construction operations shall be completely pulverized by tillage. Soil used for repair of surface erosion or grade deficiencies shall conform to topsoil requirements. The pH adjuster and fertilizer may be applied during this procedure.

3.2.4 Prepared Surface

3.2.4.1 Preparation

The prepared surface shall be a maximum 1 inch below the adjoining grade of any surfaced area. New surfaces shall be blended to existing areas. The prepared surface shall be completed with a light raking to remove debris.

3.2.4.2 Field Area Debris

Debris and stones over a minimum 2 inch in any dimension shall be removed from the surface.

3.2.4.3 Protection

Areas with the prepared surface shall be protected from compaction or

damage by vehicular or pedestrian traffic and surface erosion.

3.3 INSTALLATION

Grass and wildflower seeds shall be installed at the same time for seed mixture "B". Grass seeding shall occur as specified herein as soon as the soil has been prepared and the environmental conditions are favorable for installation. Prior to installing seed, any previously prepared surface compacted or damaged shall be reworked to meet the requirements of paragraph SITE PREPARATION. Seeding operations shall not take place when the wind velocity will prevent uniform seed distribution.

3.3.1 Installing Seed

All areas to be seeded shall be drill or Brillon seeded except for those areas which are only accessible to broadcast seeding. Seeding procedure shall ensure even coverage.

3.3.1.1 Broadcast Seeding

Seed shall be uniformly broadcast using broadcast seeders. Seed shall be broadcast at twice the rate specified. Half the total rate of seed application shall be broadcast in one direction, with the remainder of the seed rate broadcast at 90 degrees from the first direction. Seed shall be covered a maximum 1/2 inch depth by light raking or other approved device.

3.3.1.2 Drill Seeding

Seed shall be uniformly drilled to a maximum 1/2 inch depth using seeders appropriate for the type of seeds spread. Row markers shall be used with the drill seeder. Seed shall be uniformly sown in two passes, each at right angles to the other. Final pass shall be parallel to the finished contours.

3.3.1.3 Rolling

The entire area shall be firmed with a roller not exceeding 90 pounds per foot roller width. Slopes over a maximum 3-horizontal-to-1 vertical shall not be rolled. Areas seeded with seed drills equipped with rollers shall not be rolled.

3.3.2 Mulching

Mulching shall be completed within 24 hours of having the surfaces seeded.

3.3.2.1 Mulching

Prairie hay mulch shall be spread uniformly, in a continuous blanket, at the rate of 2 tons per acre. Mulch shall be spread by hand, blower-type mulch spreader or other approved method. Mulching shall be started on the windward side of relatively flat areas or on the upper part of a steep slope and continued uniformly until the area is covered. The mulch shall not be bunched. All seeded areas shall be mulched on the same day as the seeding. Hay mulching is not required in areas to receive erosion control blankets. Immediately following spreading, the mulch shall be anchored to the soil by a V-type-wheel land packer, a scalloped-disk land packer designed to force mulch into the soil surface a minimum of [3] inches, or other suitable equipment.

3.3.3 Watering Seed

Watering shall not be required.

3.4 SURFACE EROSION CONTROL

3.4.1 Surface Erosion Control Material

Surface erosion control material shall be installed within 24 hours of seeding, in accordance with manufacturer's instructions. Soil erosion control blankets shall be placed on all seeded surfaces shown on the plans with slopes greater than 3 horizontal to 1 vertical or steeper, and all swales concentrating water leading to culvets, inlets and surfaces around culvert entrances and exits that are not indicated to have riprap or turf reinforcement mat. Placement of the material shall be accomplished without damage to installed material or without deviation to finished grade.

3.4.2 Temporary Seeding

The application rate shall be 10 lbs per acre when directed during contract delays affecting the seeding operation or when a quick cover is required to prevent surface erosion, the areas designated shall be seeded in accordance with temporary seed species listed under paragraph 2.1.3. Temporary Seed Species.

3.4.2.1 Soil Amendments

When soil amendments have not been applied to the area, the quantity of 1/2 of the required soil amendments shall be applied and the area tilled in accordance with paragraph SITE PREPARATION.

3.4.2.2 Remaining Soil Amendments

The remaining soil amendments shall be applied in accordance with the paragraph Tillage when the surface is prepared for installing seed.

3.5 QUANTITY CHECK

For materials provided in bags, the empty bags shall be retained for recording the amount used. For materials provided in bulk, the weight certificates shall be retained as a record of the amount used. The amount of material used shall be compared with the total area covered to determine the rate of application used. Differences between the quantity applied and the quantity specified shall be adjusted as directed.

3.6 APPLICATION OF PESTICIDE

When application of a pesticide becomes necessary to remove a pest or disease, when weeds comprise more than 5% of the seeded area, a pesticide treatment plan shall be submitted and coordinated with the installation pest management program.

3.6.1 Technical Representative

The certified installation pest management coordinator shall be the technical representative, and shall be present at all meetings concerning treatment measures for pest or disease control. They may be present during treatment application.

3.6.2 Application

A state certified applicator shall apply required pesticides in accordance with EPA label restrictions and recommendations. Clothing and personal protective equipment shall be used as specified on the pesticide label. A closed system is recommended as it prevents the pesticide from coming into contact with the applicator or other persons. Water for formulating shall only come from designated locations. Filling hoses shall be fitted with a backflow preventer meeting local plumbing codes or standards. Overflow shall be prevented during the filling operation. Prior to each day of use, the equipment used for applying pesticide shall be inspected for leaks, clogging, wear, or damage. Any repairs are to be performed immediately. A pesticide plan shall be submitted.

3.7 RESTORATION AND CLEAN UP

3.7.1 Restoration

Existing turf areas, pavements, and facilities that have been damaged from the seeding operation shall be restored to original condition at Contractor's expense.

3.7.2 Clean Up

Excess and waste material shall be removed from the seeded areas and shall be disposed offsite. Adjacent paved areas shall be cleaned.

3.8 PROTECTION OF INSTALLED AREAS

Immediately upon completion of the seeding operation in an area, the area shall be protected against traffic or other use by erecting barricades and providing signage as required, or as directed.

3.9 SEED ESTABLISHMENT PERIOD

3.9.1 Commencement

The seed establishment period to obtain a healthy stand of grass plants shall end 6 months (180 days) after the last day of the seeding operation. Written calendar time period shall be furnished for the seed establishment period. When there is more than 1 seed establishment period, the boundaries of the seeded area covered for each period shall be described. The seed establishment period shall be modified for inclement weather, shut down periods, or for separate completion dates of areas.

3.9.2 Satisfactory Stand of Grass Plants

Grass plants shall be evaluated for species and health when the grass plants are a minimum 6 inches high.

3.9.2.1 Field Seeded Areas

A satisfactory stand of grass plants from the seeding operation shall be defined as consisting of 40 grass plants per square foot. Bare spots shall be a maximum 6 inches square. The total bare spots shall be a maximum 2 percent of the total seeded area.

3.9.3 Maintenance During Establishment Period

Maintenance of the seeded areas shall include mowing, eradicating weeds,

insects and diseases; protecting embankments and ditches from surface erosion; maintaining erosion control materials and mulch; protecting installed areas from traffic.

3.9.3.1 Mowing and Weed Control

Maintain seeded areas immediately after placement until grass is well established and exhibits a vigorous growing condition for two (2) cuttings. Maintenance shall consist of weeding, erosion repair, and reseeding of bare spots as required to achieve a vigorous growing condition. Mowing is an integral portion of the establishment of field seeded areas. Of particular importance is the control of weeds during the first year. Grass shall be mown to a minimum height of 5"- 6" when the height of the grass or the weeds obtain a height of 12".

3.9.3.2 Pesticide Treatment

Treatment for disease or pest shall be in accordance with paragraph APPLICATION OF PESTICIDE.

3.9.3.3 Repair or Reinstall

Unsatisfactory stand of grass plants and mulch shall be repaired or reinstalled, and eroded areas shall be repaired in accordance with paragraph SITE PREPARATION within 30 days of notification from the Contracting Officer.

3.9.3.4 Maintenance Record

A record of each site visit shall be furnished, describing the maintenance work performed; areas repaired or reinstalled; and diagnosis for unsatisfactory stand of grass plants.

3.10 TURF ESTABLISHMENT FOR DISTURBED AREAS (AREAS OUTSIDE OF REQUIRED GRADING AREAS)

Seeding requirements of disturbed areas should be in accordance with Section 01355 ENVIRONMENTAL PROTECTION, paragragh 3.13 POST CONSTRUCTION CLEANUP, and as follows. For turf areas that were originally lawn areas, the Contractor shall bluegrass sod the disturbed area restoring the area to its original condition. Moisten prepared surface immediately prior to laying sod. Water sodded areas immediately after installation. Saturate sod to 4 inches of soil. Precautions shall be taken to prevent drying or heating. Sod damaged by heat or dry conditions or sod cut more than 18 hours before being incorporated into the work shall not be used. Sod shall be subject to inspection by the Contracting Officer at the job site. For turf areas that were originally native grass, the Contractor shall seed and mulch the disturbed area restoring the area to its original condition.

-- End of Section --

SECTION TABLE OF CONTENTS

DIVISION 02 - SITE WORK

SECTION 02930A

EXTERIOR PLANTING

01/02

PART 1 GENERAL

1.1 REFERENCES
1.2 SUBMITTALS
1.3 SOURCE INSPECTIONS
1.4 DELIVERY, INSPECTION, STORAGE, AND HANDLING
1.4.1 Delivery
1.4.1.1 Plant Material Identification
1.4.1.2 Protection During Delivery
1.4.1.3 Delivered Topsoil
1.4.1.4 Soil Amendments
1.4.1.5 Pesticide Material
1.4.2 Inspection
1.4.3 Storage
1.4.3.1 Plant Material Storage
1.4.3.2 Other Material Storage
1.4.4 Handling
1.4.5 Time Limitation
1.5 WARRANTY

PART 2 PRODUCTS

2.1 PLANT MATERIAL
2.1.1 Plant Material Classification
2.1.2 Plant Schedule
2.1.3 Substitutions
2.1.4 Quality
2.1.5 Growing Conditions
2.1.6 Method of Shipment to Maintain Health of Root System
2.1.6.1 Balled and Burlapped (BB) Plant Material
2.1.6.2 Bare-Root (BR) Plant Material
2.1.6.3 Container-Grown (CG) Plant Material
2.1.7 Growth of Trunk and Crown
2.1.7.1 Deciduous Trees
2.1.7.2 Deciduous Shrubs
2.1.7.3 Coniferous Evergreen Plant Material
2.1.8 Plant Material Size
2.1.9 Plant Material Measurement
2.2 TOPSOIL
2.3 SOIL AMENDMENTS
2.3.1 Fertilizer
2.3.2 Organic Material
2.3.2.1 Bonemeal
2.3.2.2 Rotted Manure
2.3.2.3 Decomposed Wood Derivatives
2.3.2.4 Recycled Compost

2.3.3 Soil Conditioner
2.3.3.1 Sand
2.3.3.2 Calcined Clay
2.3.3.3 Gypsum
2.3.3.4 Expanded Shale, Clay, or Slate (ESCS)
2.4 MULCH
2.4.1 Organic Mulch
2.4.1.1 Shredded Bark
2.4.1.2 Wood Chips and Ground Bark
2.5 GEOTEXTILE
2.6 WOOD STAKING MATERIAL
2.6.1 Bracing Stake
2.6.2 Wood Ground Stakes
2.7 RUBBER GUYING MATERIAL
2.8 FLAG
2.9 MYCORRHIZAL FUNGI INOCULUM
2.10 WATER
2.11 PESTICIDE

PART 3 EXECUTION

3.1 INSTALLING PLANT MATERIAL TIME AND CONDITIONS
3.1.1 Deciduous Plant Material Time
3.1.2 Evergreen Plant Material Time
3.1.3 Plant Material Conditions
3.1.4 Tests
3.1.4.1 Percolation Test
3.1.4.2 Soil Test
3.2 SITE PREPARATION
3.2.1 Finished Grade, Topsoil and Underground Utilities
3.2.2 Layout
3.2.3 Protecting Existing Vegetation
3.3 EXCAVATION
3.3.1 Obstructions Below Ground
3.3.2 Turf Removal
3.3.3 Plant Pits
3.4 INSTALLATION
3.4.1 Setting Plant Material
3.4.1.1 Bare-Root Plant Material
3.4.2 Backfill Soil Mixture
3.4.3 Adding Mycorrhizal Fungi Inoculum
3.4.4 Backfill Procedure
3.4.4.1 Balled and Burlapped
3.4.4.2 Bare-Root Plant Material
3.4.4.3 Container-Grown Material
3.4.4.4 Earth Berm
3.4.5 Watering
3.4.6 Staking and Guying
3.4.6.1 One Bracing Stake
3.4.6.2 Two Bracing Stakes
3.4.7 Flags
3.5 FINISHING
3.5.1 Plant Material
3.5.2 Placing Geotextile
3.5.3 Placing Mulch
3.5.4 Pruning
3.6 MAINTENANCE DURING PLANTING OPERATION
3.7 APPLICATION OF PESTICIDE
3.7.1 Technical Representative

3.7.2 Application
3.8 RESTORATION AND CLEAN UP
3.8.1 Restoration
3.8.2 Clean Up
3.9 PLANT ESTABLISHMENT PERIOD
3.9.1 Commencement
3.9.2 Maintenance During Establishment Period
3.9.2.1 Watering Plant Material
3.9.2.2 Weeding
3.9.2.3 Pesticide Treatment
3.9.2.4 Post-Fertilization
3.9.2.5 Plant Pit Settling
3.9.2.6 Maintenance Record
3.9.3 Unhealthy Plant Material
3.9.4 Replacement Plant Material
3.9.5 Maintenance Instructions

-- End of Section Table of Contents --

SECTION 02930A

EXTERIOR PLANTING
01/02

PART 1 GENERAL

1.1 REFERENCES

The publications listed below form a part of this specification to the extent referenced. The publications are referred to in the text by basic designation only.

AMERICAN NATIONAL STANDARDS INSTITUTE (ANSI)

ANSI A300	(1995) Tree Care Operations - Trees, Shrubs and Other Woody Plant Maintenance

AMERICAN NURSERY AND LANDSCAPE ASSOCIATION (ANLA)

ANLA Z60.1	(1996) Nursery Stock

AMERICAN SOCIETY FOR TESTING AND MATERIALS (ASTM)

ASTM D 4972	(1995a) pH of Soils
ASTM D 5034	(1995) Breaking Strength and Elongation of Textile Fabrics (Grab Test)
ASTM D 5035	(1995) Breaking Force and Elongation of Textile Fabrics (Strip Method)
ASTM D 5268	(1992; R 1996) Topsoil Used for Landscaping Purposes
ASTM D 5883	(1996el) Use of Rotary Kiln Produced Expanded Shale, Clay or Slate (ESCS) as a Mineral Amendment in Topsoil Used for Landscaping and Related Purposes

1.2 SUBMITTALS

Government approval is required for submittals with a "G" designation; submittals not having a "G" designation are for information only. When used, a designation following the "G" designation identifies the office that will review the submittal for the Government. The following shall be submitted in accordance with Section 01330 SUBMITTAL PROCEDURES:

SD-02 Shop Drawings

Finished Grade, Topsoil and Underground Utilities;

Finished grade status; location of underground utilities and facilities; and availability of topsoil from the stripping and stock piling operation.

SD-03 Product Data

Geotextile; G-RE
Chemical Treatment Material; G-RE

Manufacturer's literature including physical characteristics, application and installation instructions for geotextile and chemical treatment material.

Equipment;

A listing of equipment to be used for the planting operation.

Delivery;

Delivery schedule.

Plant Establishment Period;

Calendar time period for the plant establishment period. When there is more than one establishment period, the boundaries of the planted areas covered for each period shall be described.

Maintenance Record;

Maintenance work performed, quantity of plant losses, and replacements; and diagnosis of unhealthy plant material.

Application of Pesticide; G-RE

Pesticide treatment plan with sequence of treatment work with dates and times. The pesticide trade name, EPA registration number, chemical composition, formulation, concentration of original and diluted material, application rate of active ingredients, method of application, area treated, amount applied; and the name and state license number of the state certified applicator shall be included.

SD-04 Samples

Delivered Topsoil; G-RE

Samples taken from several locations at the source.

Soil Amendments; G-RE

A 10 pound sample.

Mulch; G-RE

A 10 pound sample.

Geotextile; G-RE

A 6 inch square sample.

SD-06 Test Reports

Soil Test;G-RE
Percolation Test;G-RE

Certified reports of inspections and laboratory tests, prepared by an independent testing agency, including analysis and interpretation of test results. Each report shall be properly identified. Test methods used and compliance with recognized test standards shall be described.

SD-07 Certificates

Plant Material;
Topsoil;
Fertilizer;
Organic Material;
Soil Conditioner;
Organic Mulch;
Mycorrhizal Fungi Inoculum;
Pesticide; G-RE

Prior to delivery of materials, certificates of compliance attesting that materials meet the specified requirements. Certified copies of the material certificates shall include the following.

a. Plant Material: Classification, botanical name, common name, size, quantity by species, and location where grown.

b. Topsoil: Particle size, pH, organic matter content, textural class, soluble salts, chemical and mechanical analyses.

c. Fertilizer: Chemical analysis and composition percent.

d. Organic Material: Composition and source.

e. Soil Conditioner: Composition and source.

f. Organic Mulch: Composition, source, and treatment against fungi growth.

g. Mycorrhizal Fungi Inoculum: Plant material treated.

h. Pesticide. EPA registration number and registered uses.

SD-10 Operation and Maintenance Data

Maintenance Instructions;

Instruction for year-round care of installed plant material.

1.3 SOURCE INSPECTIONS

The nursery or source of plant material and the source of delivered topsoil shall be subject to inspection.

1.4 DELIVERY, INSPECTION, STORAGE, AND HANDLING

1.4.1 Delivery

A delivery schedule shall be provided at least 10 calendar days prior to the first day of delivery.

1.4.1.1 Plant Material Identification

Plant material shall be identified with attached, durable, waterproof labels and weather-resistant ink, stating the correct botanical plant name and size.

1.4.1.2 Protection During Delivery

Plant material shall be protected during delivery to prevent desiccation and damage to the branches, trunk, root system, or earth ball. Branches shall be protected by tying-in. Exposed branches shall be covered during transport.

1.4.1.3 Delivered Topsoil

Prior to the delivery of any topsoil, the availability of topsoil shall be verified in paragraph TOPSOIL. A soil test shall be provided for delivered topsoil.

1.4.1.4 Soil Amendments

Soil amendments shall be delivered to the site in the original, unopened containers bearing the manufacturer's chemical analysis. In lieu of containers, soil amendments may be furnished in bulk. A chemical analysis shall be provided for bulk deliveries.

1.4.1.5 Pesticide Material

Pesticide material shall be delivered to the site in the original, unopened containers bearing legible labels indicating the Environmental Protection Agency (EPA) registration number and the manufacturer's registered uses.

1.4.2 Inspection

Plant material shall be well shaped, vigorous and healthy with a healthy, well branched root system, free from disease, harmful insects and insect eggs, sun-scald injury, disfigurement or abrasion. Plant material shall be checked for unauthorized substitution and to establish nursery grown status. Plant material showing desiccation, abrasion, sun-scald injury, disfigurement, or unauthorized substitution shall be rejected. The plant material shall exhibit typical form of branch to height ratio; and meet the caliper and height measurements specified. Plant material that measures less than specified, or has been poled, topped off or headed back, shall be rejected. Container-grown plant material shall show new fibrous roots and the root mass shall contain its shape when removed from the container. Plant material with broken or cracked balls; or broken containers shall be rejected. Bare-root plant material that is not dormant or is showing roots were pulled from the ground shall be rejected. Other materials shall be inspected for compliance with paragraph PRODUCTS. Open soil amendment containers or wet soil amendments shall be rejected. Topsoil that contains slag, cinders, stones, lumps of soil, sticks, roots, trash or other material larger than 1-1/2 inch diameter shall be rejected. Topsoil that contains viable plant material and plant parts shall be rejected. Unacceptable material shall be removed from the job site.

1.4.3 Storage

1.4.3.1 Plant Material Storage

Plant material not installed on the day of arrival at the site shall be stored and protected in designated areas. Plant material shall not be stored longer than 30 days. Plant material shall be protected from direct exposure to wind and sun. Bare-root plant material shall be heeled-in. All plant material shall be kept in a moist condition by watering with a fine mist spray until installed.

1.4.3.2 Other Material Storage

Storage of other material shall be in designated areas. Soil amendments shall be stored in dry locations and away from contaminants. Chemical treatment material shall be stored according to manufacturer's instructions and not with planting operation material.

1.4.4 Handling

Plant material shall not be injured in handling. Cracking or breaking the earth ball of balled and burlapped plant material shall be avoided. Plant material shall not be handled by the trunk or stems. Materials shall not be dropped from vehicles.

1.4.5 Time Limitation

Except for container-grown plant material, the time limitation from digging to installing plant material shall be a maximum 90 days. The time limitation between installing the plant material and placing the mulch shall be a maximum 24 hours.

1.5 WARRANTY

Furnished plant material shall have a warranty for plant growth to be in a vigorous growing condition for a minimum 12 month period. A minimum 12 month calendar time period for the warranty of plant growth shall be provided regardless of the contract time period. When plant material is determined to be unhealthy in accordance with paragraph PLANT ESTABLISHMENT PERIOD, it shall be replaced once under this warranty.

PART 2 PRODUCTS

2.1 PLANT MATERIAL

2.1.1 Plant Material Classification

The plant material shall be nursery grown stock conforming to ANLA Z60.1 and shall be the species specified.

2.1.2 Plant Schedule

The plant schedule shall provide botanical names as included in one or more of the publications listed under "Nomenclature" in ANLA Z60.1.

2.1.3 Substitutions

Substitutions will not be permitted without written request and approval from the Contracting Officer.

2.1.4 Quality

Well shaped, well grown, vigorous plant material having healthy and well branched root systems in accordance with ANLA Z60.1 shall be provided. Plant material shall be provided free from disease, harmful insects and insect eggs, sun-scald injury, disfigurement and abrasion. Plant material shall be free of shock or damage to branches, trunk, or root systems, which may occur from the digging and preparation for shipment, method of shipment, or shipment. Plant quality is determined by the growing conditions; method of shipment to maintain health of the root system; and growth of the trunk and crown as follows.

2.1.5 Growing Conditions

Plant material shall be native to or well-suited to the growing conditions of the project site. Plant material shall be grown under climatic conditions similar to those at the project site.

2.1.6 Method of Shipment to Maintain Health of Root System

2.1.6.1 Balled and Burlapped (BB) Plant Material

Ball size and ratio shall be in accordance with ANLA Z60.1. The ball shall be of a diameter and depth to encompass enough fibrous and feeding root system necessary for the full recovery of the plant. The plant stem or trunk shall be centered in the ball. All roots shall be clean cut at the ball surface. Roots shall not be pulled from the ground. Before shipment the root ball shall be dipped in gels containing mycorrhizal fungi inoculum. The root ball shall be completely wrapped with burlap or other suitable material and securely laced with biodegradable twine.

2.1.6.2 Bare-Root (BR) Plant Material

Minimum root spread shall be in accordance with ANLA Z60.1. A well branched root system characteristic of the species specified shall be provided. Roots shall not be pulled from the ground. Bare-root plant material shall be inoculated with mycorrhizal fungi during germination in the nursery. Before shipment the root system shall be dipped in gels containing mycorrhizal fungi inoculum. Bare-root plant material shall be dormant. The root system shall be protected from drying out.

2.1.6.3 Container-Grown (CG) Plant Material

Container size shall be in accordance with ANLA Z60.1. Plant material shall be grown in a container over a duration of time for new fibrous roots to have developed and for the root mass to retain its shape and hold together when removed from the container. Container-grown plant material shall be inoculated with mycorrhizal fungi during germination in the nursery. Before shipment the root system shall be dipped in gels containing mycorrhizal fungi inoculum. The container shall be sufficiently rigid to hold ball shape and protect root mass during shipping.

2.1.7 Growth of Trunk and Crown

2.1.7.1 Deciduous Trees

A height to caliper relationship shall be provided in accordance with ANLA Z60.1. Height of branching shall bear a relationship to the size and species of tree specified and with the crown in good balance with the

trunk. The trees shall not be "poled" or the leader removed.

a. Single stem: The trunk shall be reasonably straight and symmetrical with crown and have a persistent main leader.

b. Multi-stem: All countable stems, in aggregate, shall average the size specified. To be considered a stem, there shall be no division of the trunk which branches more than 6 inches from ground level.

2.1.7.2 Deciduous Shrubs

Deciduous shrubs shall have the height and number of primary stems recommended by ANLA Z60.1. Acceptable plant material shall be well shaped, with sufficient well-spaced side branches, and recognized by the trade as typical for the species grown in the region of the project.

2.1.7.3 Coniferous Evergreen Plant Material

Coniferous Evergreen plant material shall have the height-to-spread ratio recommended by ANLA Z60.1. The coniferous evergreen trees shall not be "poled" or the leader removed. Acceptable plant material shall be exceptionally heavy, well shaped and trimmed to form a symmetrical and tightly knit plant. The form of growth desired shall be as indicated.

2.1.8 Plant Material Size

Plant material shall be furnished in sizes indicated. Plant material larger in size than specified may be provided at no additional cost to the Government.

2.1.9 Plant Material Measurement

Plant material measurements shall be in accordance with ANLA Z60.1.

2.2 TOPSOIL

Topsoil shall be as defined in ASTM D 5268. When available, the topsoil shall be the existing surface soil stripped and stockpiled onsite. When additional topsoil is required beyond the available topsoil from the stripping operation, topsoil shall be delivered and amended as recommended by the soil test for the plant material specified. Topsoil shall be free from slag, cinders, stones, lumps of soil, sticks, roots, trash or other material over a minimum 1-1/2 inch diameter. Topsoil shall be free from viable plants and plant parts.

2.3 SOIL AMENDMENTS

Soil amendments shall consist of fertilizer, organic material and soil conditioners meeting the following requirements. Vermiculite is not recommended.

2.3.1 Fertilizer

Fertilizer shall be controlled release commercial grade; free flowing, pellet or tablet form; uniform in composition; and consist of a nitrogen-phosphorus-potassium ratio. The fertilizer shall be derived from sulphur coated urea, urea formaldehyde, plastic or polymer coated pills, or isobutylenediurea (IBDU). Fertilizer shall be balanced with the inclusion

of trace minerals and micro-nutrients.

2.3.2 Organic Material

Organic material shall consist of either bonemeal, peat, rotted manure, decomposed wood derivatives, recycled compost.

2.3.2.1 Bonemeal

Bonemeal shall be a finely ground, steamed bone product containing from 2 to 4 percent nitrogen and 16 to 40 percent phosphoric acid.

2.3.2.2 Rotted Manure

Rotted manure shall be unleached horse, chicken, or cattle manure containing a maximum 25 percent by volume of straw, sawdust, or other bedding materials. Manure shall contain no chemicals or ingredients harmful to plants. The manure shall be heat treated to kill weed seeds and shall be free of stones, sticks, and soil.

2.3.2.3 Decomposed Wood Derivatives

Decomposed wood derivatives shall be ground bark, sawdust, or other wood waste material free of stones, sticks, and toxic substances harmful to plants, and stabilized with nitrogen.

2.3.2.4 Recycled Compost

Compost shall be a well decomposed, stable, weed free organic matter source. It shall be derived from agricultural, yard trimmings. The compost shall possess no objectionable odors and shall not resemble the raw material from which it was derived. The material shall not contain substances toxic to plants. Gradation: The compost material shall pass through a 3/8 inch screen, possess a pH of 5.5 to 8.0, and have a moisture content between 35-55 percent by weight. The material shall not contain more than 1 percent or less by weight of man-made foreign matter. Compost shall be cleaned of plastic materials larger than 2 inches in length.

2.3.3 Soil Conditioner

Soil conditioner shall meet topsoil requirements for the plant material specified.

2.3.3.1 Sand

Sand shall be clean and free of toxic materials. Gradation: A minimum 95 percent by weight shall pass a No. 10 sieve and a minimum 10 percent by weight shall pass a No. 16 sieve. Greensand shall be balanced with the inclusion of trace minerals and nutrients.

2.3.3.2 Calcined Clay

Granular particles shall be produced from montmorillonite clay calcined to minimum temperature of 1200 degrees F. Gradation: A minimum 90 percent passing No. 8 sieve; a minimum 99 percent shall be retained on No. 60 sieve; and a maximum 2 percent shall pass a No. 100 sieve. Bulk density: A maximum 40 pounds per cubic foot.

2.3.3.3 Gypsum

Gypsum shall be commercially packaged, free flowing, and a minimum 95 percent calcium sulfate by volume.

2.3.3.4 Expanded Shale, Clay, or Slate (ESCS)

Rotary kiln produced ESCS material shall be in conformance with ASTM D 5883.

2.4 MULCH

Mulch shall be free from weeds, mold, and other deleterious materials. Mulch materials shall be native to the region. Rotted manure is not recommended to be used as a mulch because it would encourage surface rooting of the plant material and weeds.

2.4.1 Organic Mulch

Organic mulch materials shall be native to the project site and consist of recycled mulch, shredded bark, wood chips, or ground bark.

2.4.1.1 Shredded Bark

Locally shredded material shall be treated to retard the growth of mold and fungi. Maximum length of any shredded material shall be 4 inches

2.4.1.2 Wood Chips and Ground Bark

Locally chipped or ground material shall be treated to retard the growth of mold and fungi. Gradation: A maximum 2 inch wide by 4 inch long.

2.5 GEOTEXTILE

Geotextile shall be woven or nonwoven; polypropylene, polyester, or fiberglass, mat in accordance with ASTM D 5034 or ASTM D 5035. It shall be made specifically for use as a fabric around plant material. Nominal weight shall be a minimum 4 ounces per square yard. Permeability rate shall be a minimum 0.04 inch per second.

2.6 WOOD STAKING MATERIAL

Wood stakes shall be hardwood or fir; rough sawn; free from knots, rot, cross grain, or other defects that would impair their strength.

2.6.1 Bracing Stake

Wood bracing stakes shall be a minimum 2 x 2 inch square and a minimum 8 feet long with a point at one end. Stake shall be set without damaging rootball.

2.6.2 Wood Ground Stakes

Wood ground stakes shall be a minimum of 2 x 2 inch square and a minimum 3 feet long with a point at one end.

2.7 RUBBER GUYING MATERIAL

Rubber chafing guards, consisting of recycled material, shall be used to protect tree trunks and branches when metal guying material is applied. The material shall be the same color throughout the project. Length shall

be a minimum 1.5 times the circumference of the plant trunk at its base.

2.8 FLAG

Plastic flag material shall be used on guying material. It shall be a minimum 6 inches long. Tape color shall be consistent and visually complimentary to the entire project area. The tape color shall meet pedestrian visual safety requirements for day and night.

2.9 MYCORRHIZAL FUNGI INOCULUM

Mycorrhizal fungi inoculum shall be composed of multiple-fungus inoculum as recommended by the manufacturer for the plant material specified.

2.10 WATER

Unless otherwise directed, water shall be the responsibility of the Contractor. Water shall not contain elements toxic to plant life.

2.11 PESTICIDE

Pesticide shall be insecticide, herbicide, fungicide, nematocide, rodenticide or miticide. For the purpose of this specification a soil fumigant shall have the same requirements as a pesticide. The pesticide material shall be EPA registered and approved.

PART 3 EXECUTION

3.1 INSTALLING PLANT MATERIAL TIME AND CONDITIONS

3.1.1 Deciduous Plant Material Time

Deciduous plant material shall be installed from March 15 to June 1.

3.1.2 Evergreen Plant Material Time

Evergreen plant material shall be installed from March 15 to June 1.

3.1.3 Plant Material Conditions

Planting operations shall be performed only during periods when beneficial results can be obtained. When drought, excessive moisture, frozen ground or other unsatisfactory conditions prevail, the work shall be stopped when directed. When special conditions warrant a variance to the planting operations, proposed planting times shall be submitted for approval.

3.1.4 Tests

3.1.4.1 Percolation Test

Test for percolation shall be done to determine positive drainage of plant pits and beds. A positive percolation shall consist of a minimum 1 inch per 3 hours; when a negative percolation test occurs, a shop drawing shall be submitted indicating the corrective measures.

3.1.4.2 Soil Test

Delivered topsoil, excavated plant pit soil, and stockpiled topsoil shall be tested in accordance with ASTM D 5268 and ASTM D 4972 for determining

the particle size, pH, organic matter content, textural class, chemical analysis, soluble salts analysis, and mechanical analysis. Sample collection onsite shall be random over the entire site. Sample collection for stockpiled topsoil shall be at different levels in the stockpile. The soil shall be free from debris, noxious weeds, toxic substances, or other materials harmful to plant growth. The test shall determine the quantities and type of soil amendments required to meet local growing conditions for the plant material specified.

3.2 SITE PREPARATION

3.2.1 Finished Grade, Topsoil and Underground Utilities

The Contractor shall verify that finished grades are as indicated on drawings, and that the placing of topsoil, the smooth grading, and the compaction requirements have been completed prior to the commencement of the planting operation. The location of underground utilities and facilities in the area of the planting operation shall be verified. Damage to underground utilities and facilities shall be repaired at the Contractor's expense.

3.2.2 Layout

Plant material locations and bed outlines shall be staked on the project site before any excavation is made. Plant material locations may be adjusted to meet field conditions.

3.2.3 Protecting Existing Vegetation

When there are established lawns in the planting area, the turf shall be covered and/or protected during planting operations. Existing trees, shrubs, and plant beds that are to be preserved shall be barricaded along the dripline to protect them during planting operations.

3.3 EXCAVATION

3.3.1 Obstructions Below Ground

When obstructions below ground affect the work, shop drawings showing proposed adjustments to plant material location, type of plant and planting method shall be submitted for approval.

3.3.2 Turf Removal

Where the planting operation occurs in an existing lawn area, the turf shall be removed from the excavation area to a depth that will ensure the removal of the entire root system.

3.3.3 Plant Pits

Plant pits for ball and burlapped or container plant material shall be dug to a depth equal to the height of the root ball as measured from the base of the ball to the base of the plant trunk. Plant pits for bare-root plant material shall be dug to a depth equal to the height of the root system. Plant pits shall be dug a minimum 50 percent wider than the ball or root system to allow for root expansion. The pit shall be constructed with sides sloping towards the base as a cone, to encourage well aerated soil to be available to the root system for favorable root growth. Cylindrical pits with vertical sides shall not be used.

3.4 INSTALLATION

3.4.1 Setting Plant Material

Plant material shall be set plumb and held in position until sufficient soil has been firmly placed around root system or ball. In relation to the surrounding grade, the plant material shall be set even with the grade at which it was grown.

3.4.1.1 Bare-Root Plant Material

Bare-root plant material shall be placed in water a minimum 30 minutes prior to setting.

3.4.2 Backfill Soil Mixture

The backfill soil mixture may be a mix of topsoil and soil amendments suitable for the plant material specified. When practical, the excavated soil from the plant pit that is not amended provides the best backfill and shall be used.

3.4.3 Adding Mycorrhizal Fungi Inoculum

Mycorrhizal fungi inoculum shall be added as recommended by the manufacturer for the plant material specified.

3.4.4 Backfill Procedure

Prior to backfilling, all metal, wood, synthetic products, or treated burlap devices shall be removed from the ball or root system avoiding damage to the root system. The backfill procedure shall remove air pockets from around the root system. Additional requirements are as follows.

3.4.4.1 Balled and Burlapped

Biodegradable burlap and tying material shall be carefully opened and folded back from the top a minimum 1/3 depth from the top of the root ball. Backfill mixture shall be added to the plant pit in 6 inch layers with each layer tamped.

3.4.4.2 Bare-Root Plant Material

The root system shall be spread out and arranged in its natural position. Damaged roots shall be removed with a clean cut. The backfill soil mixture shall be carefully worked in amongst the roots and watered to form a soupy mixture. Air pockets shall be removed from around the root system, and root to soil contact shall be provided.

3.4.4.3 Container-Grown Material

The plant material shall be carefully removed from containers that are not biodegradeable. Prior to setting the plant in the pit, a maximum 1/4 depth of the root mass, measured from the bottom, shall be spread apart to promote new root growth. For plant material in biodegradable containers the container shall be split prior to setting the plant with container. Backfill mixture shall be added to the plant pit in 6 inch layers with each layer tamped.

3.4.4.4 Earth Berm

An earth berm, consisting of backfill soil mixture, shall be formed with a minimum 4 inch height around the edge of the plant pit to aid in water retention and to provide soil for settling adjustments.

3.4.5 Watering

Plant pits and plant beds shall be watered immediately after backfilling, until completely saturated.

3.4.6 Staking and Guying

Staking will be required when trees are unstable or will not remain set due to their size, shape, or exposure to high wind velocity.

3.4.6.1 One Bracing Stake

Trees 4 to 6 feet high shall be firmly anchored in place with one bracing stake. The bracing stake shall be placed on the side of the tree facing the prevailing wind. The bracing stake shall be driven vertically into firm ground and shall not injure the ball or root system. The tree shall be held firmly to the stake with a double strand of guying material. The guying material shall be firmly anchored at a minimum 1/2 tree height and shall prevent girdling. A chafing guard shall be used when metal is the guying material.

3.4.6.2 Two Bracing Stakes

Trees from 6 to 8 feet height shall be firmly anchored in place with 2 bracing stakes placed on opposite sides. Bracing stakes shall be driven vertically into firm ground and shall not injure the ball or root system. The tree shall be held firmly between the stakes with a double strand of guying material. The guying material shall be firmly anchored at a minimum 1/2 tree height and shall prevent girdling. Chafing guards shall be used when metal is the guying material.

3.4.7 Flags

A flag shall be securely fastened to each guy line equidistant between the tree and the stake, deadmen, or earth anchor. The flag shall be visible to pedestrians.

3.5 FINISHING

3.5.1 Plant Material

Prior to placing mulch, the installed area shall be uniformly edged to provide a clear division line between the planted area and the adjacent turf area, shaped as indicated. The installed area shall be raked and smoothed while maintaining the earth berms.

3.5.2 Placing Geotextile

Prior to placing mulch, geotextile shall be placed as indicated in accordance with the manufacturer's recommendations.

3.5.3 Placing Mulch

The placement of mulch shall occur a maximum 48 hours after planting. Mulch, used to reduce soil water loss, regulate soil temperature and prevent weed growth, shall be spread to cover the installed area with a minimum 4 inch uniform thickness. Mulch shall be kept out of the crowns of shrubs, ground cover, and vines and shall be kept off buildings, sidewalks and other facilities.

3.5.4 Pruning

Pruning shall be accomplished by trained and experienced personnel. The pruning of trees and palms shall be in accordance with ANSI A300. Only dead or broken material shall be pruned from installed plants. The typical growth habit of individual plant material shall be retained. Clean cuts shall be made flush with the parent trunk. Improper cuts, stubs, dead and broken branches shall be removed. "Headback" cuts at right angles to the line of growth will not be permitted. Trees shall not be poled or the leader removed, nor shall the leader be pruned or "topped off".

3.6 MAINTENANCE DURING PLANTING OPERATION

Installed plant material shall be maintained in a healthy growing condition. Maintenance operations shall begin immediately after each plant is installed to prevent desiccation and shall continue until the plant establishment period commences. Installed areas shall be kept free of weeds, grass, and other undesired vegetation. The maintenance includes maintaining the mulch, watering, and adjusting settling.

3.7 APPLICATION OF PESTICIDE

When application of a pesticide becomes necessary to remove a pest or disease, a pesticide treatment plan shall be submitted and coordinated with the installation pest management program.

3.7.1 Technical Representative

The certified installation pest management coordinator shall be the technical representative, and shall be present at all meetings concerning treatment measures for pest or disease control. They may be present during treatment application.

3.7.2 Application

A state certified applicator shall apply required pesticides in accordance with EPA label restrictions and recommendations. Clothing and personal protective equipment shall be used as specified on the pesticide label. A closed system is recommended as it prevents the pesticide from coming into contact with the applicator or other persons. Water for formulating shall only come from designated locations. Filling hoses shall be fitted with a backflow preventer meeting local plumbing codes or standards. Overflow shall be prevented during the filling operation. Prior to each day of use, the equipment used for applying pesticide shall be inspected for leaks, clogging, wear, or damage. Any repairs are to be performed immediately.

3.8 RESTORATION AND CLEAN UP

3.8.1 Restoration

Turf areas, pavements and facilities that have been damaged from the planting operation shall be restored to original condition at the

Contractor's expense.

3.8.2 Clean Up

Excess and waste material shall be removed from the installed area and shall be disposed offsite. Adjacent paved areas shall be cleared.

3.9 PLANT ESTABLISHMENT PERIOD

3.9.1 Commencement

The plant establishment period for maintaining exterior plantings in a healthy growing condition shall commence on the first day of exterior planting work under this contract and shall continue through the remaining life of the contract and end 12 months after the last day of exterior planting required by this contract. Written calendar time period shall be furnished for the plant establishment period. When there is more than one plant establishment period, the boundaries of the planted area covered for each period shall be described. The plant establishment period shall be coordinated with Sections 02921A SEEDING. The plant establishment period shall be modified for inclement weather shut down periods, or for separate completion dates for areas.

3.9.2 Maintenance During Establishment Period

Maintenance of plant material shall include straightening plant material, straightening stakes; tightening guying material; correcting girdling; supplementing mulch; pruning dead or broken branch tips; maintaining plant material labels; watering; eradicating weeds, insects and disease; post-fertilization; and removing and replacing unhealthy plants.

3.9.2.1 Watering Plant Material

The plant material shall be watered as necessary to prevent desiccation and to maintain an adequate supply of moisture within the root zone. An adequate supply of moisture is estimated to be the equivalent of 1 inch absorbed water per week, delivered in the form of rain or augmented by watering. Run-off, puddling and wilting shall be prevented. Unless otherwise directed, watering trucks shall not be driven over turf areas. Watering of other adjacent areas or existing plant material shall be prevented.

3.9.2.2 Weeding

Grass and weeds in the installed areas shall not be allowed to reach a maximum 3 inches height before being completely removed, including the root system.

3.9.2.3 Pesticide Treatment

Treatment for disease or pest shall be in accordance with paragraph APPLICATION OF PESTICIDE.

3.9.2.4 Post-Fertilization

The plant material shall be topdressed at least once during the period of establishment with controlled release fertilizer, reference paragraph SOIL AMENDMENTS. Apply at the rate of 2 pounds per 100 square feet of plant pit or bed area. Dry fertilizer adhering to plants shall be flushed off.

The application shall be timed prior to the advent of winter dormancy.

3.9.2.5 Plant Pit Settling

When settling occurs to the backfill soil mixture, additional backfill soil shall be added to the plant pit or plant bed until the backfill level is equal to the surrounding grade. Serious settling that affects the setting of the plant in relation to the maximum depth at which it was grown requires replanting in accordance with paragraph INSTALLATION. The earth berm shall be maintained.

3.9.2.6 Maintenance Record

A record shall be furnished describing the maintenance work performed, the quantity of plant losses, diagnosis of the plant loss, and the quantity of replacements made on each site visit.

3.9.3 Unhealthy Plant Material

A tree shall be considered unhealthy or dead when the main leader has died back, or up to a maximum 25 percent of the crown has died. A shrub shall be considered unhealthy or dead when up to a maximum 25 percent of the plant has died. This condition shall be determined by scraping on a branch an area 1/16 inch square, maximum, to determine if there is a green cambium layer below the bark. The Contractor shall determine the cause for unhealthy plant material and shall provide recommendations for replacement. Unhealthy or dead plant material shall be removed immediately and shall be replaced as soon as seasonal conditions permit.

3.9.4 Replacement Plant Material

Unless otherwise directed, plant material shall be provided for replacement in accordance with paragraph PLANT MATERIAL. Replacement plant material shall be installed in accordance with paragraph INSTALLATION, and recommendations in paragraph PLANT ESTABLISHMENT PERIOD. Plant material shall be replaced in accordance with paragraph WARRANTY. An extended plant establishment period shall not be required for replacement plant material.

3.9.5 Maintenance Instructions

Written instructions shall be furnished containing drawings and other necessary information for year-round care of the installed plant material; including, when and where maintenance should occur, and the procedures for plant material replacement,.

-- End of Section --

SECTION TABLE OF CONTENTS

DIVISION 03 - CONCRETE

SECTION 03101

FORMWORK FOR CONCRETE

12/92

PART 1 GENERAL

1.1 REFERENCES
1.2 DESIGN REQUIREMENTS
1.3 SUBMITTALS
1.4 STORAGE AND HANDLING

PART 2 PRODUCTS

2.1 MATERIALS
2.1.1 Forms and Form Liners
2.1.1.1 Class "B" Finish
2.1.1.2 Class "D" Finish
2.1.2 Form Coating
2.1.3 Fiber Voids
2.1.4 Void Retainers
2.2 ACCESSORIES

PART 3 EXECUTION

3.1 INSTALLATION
3.1.1 Form Construction
3.1.2 Chamfering
3.1.3 Coating
3.2 FORM REMOVAL
3.2.1 Formwork Not Supporting Weight of Concrete
3.2.2 Formwork Supporting Weight of Concrete
3.3 INSPECTION
3.4 Fiber Voids and Void Retainers

-- End of Section Table of Contents --

SECTION 03101

FORMWORK FOR CONCRETE
12/92

PART 1 GENERAL

1.1 REFERENCES

The publications listed below form a part of this specification to the extent referenced. The publications are referred to in the text by basic designation only.

ACI INTERNATIONAL (ACI)

ACI 347R	(1994) Guide for Formwork for Concrete

AMERICAN SOCIETY FOR TESTING AND MATERIALS (ASTM)

ASTM C 31/C 31M	(1998) Making and Curing Concrete Test Specimens in the Field
ASTM C 39/C 39M	(1999) Compressive Strength of Cylindrical Concrete Specimens
ASTM C 578	(1995) Rigid, Cellular Polystyrene Thermal Insulation
ASTM C 1074	(1998) Estimating Concrete Strength by the Maturity Method
ASTM C 1077	(1998) Laboratories Testing Concrete and Concrete Aggregates for Use in Construction and Criteria for Laboratory Evaluation

DEPARTMENT OF COMMERCE (DOC)

DOC PS 1	(1996) Voluntary Product Standard - Construction and Industrial Plywood

1.2 DESIGN REQUIREMENTS

The design, engineering, and construction of the formwork shall be the responsibility of the Contractor. The formwork shall be designed for anticipated live and dead loads and shall comply with the tolerances specified in Section 03301 CAST-IN-PLACE STRUCTURAL CONCRETE. The formwork shall be designed as a complete system with consideration given to the effects of cementitious materials and mixture additives such as fly ash, cement type, plasticizers, accelerators, retarders, air entrainment, and others. The adequacy of formwork design and construction shall be monitored prior to and during concrete placement as part of the Contractor's approved Quality Control Plan.

1.3 SUBMITTALS

Government approval is required for submittals with a "G" designation; submittals not having a "G" designation are for information only. When used, a designation following the "G" designation identifies the office that will review the submittal for the Government. The following shall be submitted in accordance with Section 01330 SUBMITTAL PROCEDURES:

SD-03 Product Data

Materials;

Manufacturer's literature shall be submitted for plywood, concrete form hard board, fiber voids and retainers, form accessories, prefabricated forms, and form coating.

1.4 STORAGE AND HANDLING

Fiber voids shall be stored above ground level in a dry location. Fiber voids shall be kept dry until installed and overlaid with concrete.

PART 2 PRODUCTS

2.1 MATERIALS

2.1.1 Forms and Form Liners

Forms and form liners shall be fabricated with facing materials that will produce a finish meeting the specified irregularities in formed surface requirements as defined in ACI 347R. Forms and form liners shall be fabricated with facing materials as specified below.

2.1.1.1 Class "B" Finish

This class of finish shall apply to all surfaces except those specified to receive Class D. The form facing material shall be composed of tongue-and-groove or shiplap lumber, plywood conforming to DOC PS 1, Grade B-B concrete form, tempered concrete form hard board or steel. Steel lining on wood sheathing will not be permitted.

2.1.1.2 Class "D" Finish

This class of finish shall apply to surfaces against which backfill will be placed. The form facing may be of wood or steel.

2.1.2 Form Coating

Form coating shall be commercial formulation that will not bond with, stain, cause deterioration, or any other damage to concrete surfaces. The coating shall not impair subsequent treatment of concrete surfaces depending upon bond or adhesion nor impede the wetting of surfaces to be cured with water or curing compounds. If special form liners are to be used, the Contractor shall follow the recommendation of the form coating manufacturer.

2.1.3 Fiber Voids

Fiber voids shall be the product of a reputable manufacturer regularly engaged in the commercial production of fiber voids. The voids shall be constructed of double faced, corrugated fiberboard. The corrugated fiberboard shall be fabricated of [wet strength] [standard kraft] paper liners, impregnated with paraffin, and laminated with moisture resistant adhesive, and shall have a board strength of 275 psi. Voids which are impregnated with paraffin after construction, in lieu of being constructed with paraffin impregnated fiberboard, are acceptable. Voids shall be designed to support not less than 1000 psf. To prevent separation during concrete placement fiber voids shall be assembled with steel or plastic banding at 4 feet on center maximum, or by adequate stapling or gluing as recommended by the manufacturer. Fiber voids placed under concrete slabs and that are 8 inches in depth may be heavy duty "waffle box" type, constructed of paraffin impregnated corrugated fiberboard.

2.1.4 Void Retainers

Void retainers shall be polystyrene rigid insulation shall conforming to ASTM C 578, Type V, VI, or VII, square edged.

2.2 ACCESSORIES

Ties and other similar form accessories to be partially or wholly embedded in the concrete shall be of a commercially manufactured type. After the ends or end fasteners have been removed, the embedded portion of metal ties shall terminate not less than 2 inches from any concrete surface either exposed to view or exposed to water. Plastic snap ties may be used in locations where the surface will not be exposed to view. Form ties shall be constructed so that the ends or end fasteners can be removed without spalling the concrete.

PART 3 EXECUTION

3.1 INSTALLATION

3.1.1 Form Construction

Forms shall be constructed true to the structural design and required alignment. The form surface and joints shall be mortar tight and supported to achieve safe performance during construction, concrete placement, and form removal. The Contractor shall continuously monitor the alignment and stability of the forms during all phases to assure the finished product will meet the required surface class specified in paragraph FORMS AND FORM LINERS and tolerances specified in paragraph DESIGN REQUIREMENTS. Failure of any supporting surface either due to surface texture, deflection or form collapse shall be the responsibility of the Contractor as will the replacement or correction of unsatisfactory surfaces. When forms for continuous surfaces are placed in successive units, care shall be taken to fit the forms over the completed surface to obtain accurate alignment of the surface and to prevent leakage of mortar. Forms shall not be re-used if there is any evidence of defects which would impair the quality of the resulting concrete surface. All surfaces of used forms shall be cleaned of

mortar and any other foreign material before reuse.

3.1.2 Chamfering

All exposed joints, edges and external corners shall be chamfered by molding placed in the forms unless the drawings specifically state that chamfering is to be omitted or as otherwise specified. Chamfered joints shall not be permitted where earth or rockfill is placed in contact with concrete surfaces. Chamfered joints shall be terminated twelve inches outside the limit of the earth or rockfill so that the end of the chamfers will be clearly visible.

3.1.3 Coating

Forms for exposed or painted surfaces shall be coated with form oil or a form-release agent before the form or reinforcement is placed in final position. The coating shall be used as recommended in the manufacturer's instructions. Forms for unexposed surfaces may be wet with water in lieu of coating immediately before placing concrete, except that, in cold weather when freezing temperatures are anticipated, coating shall be mandatory. Surplus coating on form surfaces and coating on reinforcing steel and construction joints shall be removed before placing concrete.

3.2 FORM REMOVAL

Forms shall not be removed without approval. The minimal time required for concrete to reach a strength adequate for removal of formwork without risking the safety of workers or the quality of the concrete depends on a number of factors including, but not limited to, ambient temperature, concrete lift heights, type and amount of concrete admixture, and type and amount of cementitious material in the concrete. It is the responsibility of the Contractor to consider all applicable factors and leave the forms in place until it is safe to remove them. In any case forms shall not be removed unless the minimum time or minimum compressive strength requirements below are met, except as otherwise directed or specifically authorized. When conditions are such as to justify the requirement, forms will be required to remain in place for a longer period. All removal shall be accomplished in a manner which will prevent damage to the concrete and ensure the complete safety of the structure. Where forms support more than one element, the forms shall not be removed until the form removal criteria are met by all supported elements. Form removal shall be scheduled so that all necessary repairs can be performed as specified in Section 03301. Evidence that concrete has gained sufficient strength to permit removal of forms shall be determined by tests on control cylinders. All control cylinders shall be stored in the structure or as near the structure as possible so they receive the same curing conditions and protection methods as given those portions of the structure they represent. Control cylinders shall be removed from the molds at an age of no more than 24 hours. All control cylinders shall be prepared and tested in accordance with ASTM C 31/C 31M and ASTM C 39/C 39M at the expense of the Contractor by an independent laboratory that complies with ASTM C 1077 and shall be tested within 4 hours after removal from the site. After obtaining approval, the Contractor may use maturity instrumentation instead of control cylinders to determine the compressive strength of the concrete. ASTM C 1074 procedures shall be used for estimating concrete strength by means of the maturity method. All expenses associated with instrumenting the concrete and evaluating the strength using maturity relationships shall be the responsibility of the Contractor.

3.2.1 Formwork Not Supporting Weight of Concrete

Formwork for walls, columns, sides of beams, gravity structures, and other vertical type formwork not supporting the weight of concrete shall not be removed in less than 24 hours after concrete placement is completed.

3.2.2 Formwork Supporting Weight of Concrete

Formwork supporting weight of concrete and shoring shall not be removed until structural members have acquired sufficient strength to safely support their own weight and any construction or other superimposed loads to which the supported concrete may be subjected. As a minimum, forms shall be left in place until control concrete test cylinders or maturity instrumentation indicate evidence the concrete has attained at least 70 percent of the compressive strength required for the structure in accordance with the requirements of Section 03301.

3.3 INSPECTION

Forms and embedded items shall be inspected in sufficient time prior to each concrete placement by the Contractor in order to certify to the Contracting Officer that they are ready to receive concrete. The results of each inspection shall be reported in writing.

3.4 Fiber Voids and Void Retainers

Fiber voids shall be placed on a smooth firm dry bed of suitable material, to avoid being displaced vertically, and shall be set tight, with no buckled cartons, in order that horizontal displacement cannot take place. Each section of void shall have its ends sealed by dipping in paraffin, with any additional cutting of voids at the jobsite to be field dipped in the same type of sealer, unless liners and flutes are completely impregnated with paraffin. Joints shall be sealed with a moisture resistant tape having a minimum width of 3 inches. If voids are destroyed or damaged and are not capable of supporting the design load, they shall be replaced prior to placing of concrete. Fiber void retainers shall be installed, continuously, on beside fiber voids in order to retain the cavity after the fiber voids biodegrade.

-- End of Section --

SECTION TABLE OF CONTENTS

DIVISION 03 - CONCRETE

SECTION 03150

EXPANSION JOINTS, CONTRACTION JOINTS, AND WATERSTOPS

05/98

PART 1 GENERAL

1.1 REFERENCES
1.2 SUBMITTALS
1.3 DELIVERY AND STORAGE

PART 2 PRODUCTS

2.1 PREFORMED EXPANSION JOINT FILLER
2.2 SEALANT
2.2.1 Field-Molded Type
2.3 WATERSTOPS
2.3.1 Non-Metallic Materials

PART 3 EXECUTION

3.1 JOINTS
3.1.1 Expansion Joints
3.1.2 Joint Sealant
3.1.2.1 Joints With Field-Molded Sealant
3.2 WATERSTOPS, INSTALLATION AND SPLICES
3.2.1 Non-Metallic
3.2.1.1 Rubber Waterstop
3.2.1.2 Polyvinyl Chloride Waterstop
3.2.1.3 Quality Assurance
3.3 CONSTRUCTION JOINTS

-- End of Section Table of Contents --

SECTION 03150

EXPANSION JOINTS, CONTRACTION JOINTS, AND WATERSTOPS
05/98

PART 1 GENERAL

1.1 REFERENCES

The publications listed below form a part of this specification to the extent referenced. The publications are referred to in the text by basic designation only.

AMERICAN SOCIETY FOR TESTING AND MATERIALS (ASTM)

ASTM C 920	(1998) Elastomeric Joint Sealants
ASTM D 471	(1998el) Rubber Property - Effect of Liquids
ASTM D 1751	(1999) Preformed Expansion Joint Filler for Concrete Paving and Structural Construction (Nonextruding and Resilient Bituminous Types)
ASTM D 1752	(1984; R 1996el) Preformed Sponge Rubber and Cork Expansion Joint Fillers for Concrete Paving and Structural Construction
ASTM D 5249	(1995) Backer Material for Use With Cold and Hot-Applied Joint Sealants in Portland-Cement Concrete and Asphalt Joints

CORPS OF ENGINEERS (COE)

COE CRD-C 513	(1974) Corps of Engineers Specifications for Rubber Waterstops
COE CRD-C 572	(1974) Corps of Engineers Specifications for Polyvinylchloride Waterstop

1.2 SUBMITTALS

Government approval is required for submittals with a "G" designation; submittals not having a "G" designation are for information only. When used, a designation following the "G" designation identifies the office that will review the submittal for the Government. The following shall be submitted in accordance with Section 01330 SUBMITTAL PROCEDURES:

SD-03 Product Data

Preformed Expansion Joint Filler;
Sealant;
Waterstops;

Manufacturer's literature, including safety data sheets, and recommended instructions for installation, for preformed fillers and the lubricants used in their installation; field-molded sealants and primers (when required by sealant manufacturer); preformed compression seals; and waterstops.

SD-04 Samples

Non-metallic Materials;

Specimens identified to indicate manufacturer, type of material, size, quantity of material, and shipment or lot represented. Each sample shall be a piece not less than 12 inch long cut from each 200 ft of finished waterstop furnished, but not less than a total of 4 ft of each type, size, and lot furnished. One splice sample of each size and type for every 50 splices made in the factory and every 10 splices made at the job site. The splice samples shall be made using straight run pieces with the splice located at the mid-length of the sample and finished as required for the installed waterstop. The total length of each splice shall be not less than 12 inches long.

SD-07 Certificates

Preformed Expansion Joint Filler;
Sealant;
Waterstops;

Certificates of compliance stating that the joint filler and sealant materials and waterstops conform to the requirements specified.

1.3 DELIVERY AND STORAGE

Material delivered and placed in storage shall be stored off the ground and protected from moisture, dirt, and other contaminants. Sealants shall be delivered in the manufacturer's original unopened containers. Sealants whose shelf life has expired shall be removed from the site.

PART 2 PRODUCTS

2.1 PREFORMED EXPANSION JOINT FILLER

Expansion joint filler shall be preformed material conforming to ASTM D 1751 or ASTM D 1752. Unless otherwise indicated, filler material shall be 3/8 inch thick and of a width applicable for the joint formed. Backer material, when required, shall conform to ASTM D 5249.

2.2 SEALANT

Joint sealant shall conform to the following:

2.2.1 Field-Molded Type

ASTM C 920, Type M for horizontal joints or Type NS for vertical joints, Class 25, and Use NT. Bond breaker material shall be polyethylene tape, coated paper, metal foil or similar type materials. The back-up material shall be compressible, non-shrink, nonreactive with sealant, and non-absorptive material type such as extruded butyl or polychloroprene

rubber.

2.3 WATERSTOPS

Intersection and change of direction waterstops shall be shop fabricated.

2.3.1 Non-Metallic Materials`

Non-metallic waterstops shall be manufactured from a prime virgin resin; reclaimed material is not acceptable. The compound shall contain plasticizers, stabilizers, and other additives to meet specified requirements. Rubber waterstops shall conform to COE CRD-C 513. Polyvinylchloride waterstops shall conform to COE CRD-C 572. Thermoplastic elastomeric rubber waterstops shall conform to ASTM D 471.

PART 3 EXECUTION

3.1 JOINTS

Joints shall be installed at locations indicated and as authorized.

3.1.1 Expansion Joints

Preformed expansion joint filler shall be used in expansion and isolation joints in slabs around columns and between slabs on grade and vertical surfaces where indicated. The filler shall extend the full slab depth, unless otherwise indicated. The edges of the joint shall be neatly finished with an edging tool of 1/8 inch radius, except where a resilient floor surface will be applied. Where the joint is to receive a sealant, the filler strips shall be installed at the proper level below the finished floor with a slightly tapered, dressed and oiled wood strip temporarily secured to the top to form a recess to the size shown on the drawings. The wood strip shall be removed after the concrete has set. Contractor may opt to use a removable expansion filler cap designed and fabricated for this purpose in lieu of the wood strip. The groove shall be thoroughly cleaned of laitance, curing compound, foreign materials, protrusions of hardened concrete, and any dust which shall be blown out of the groove with oil-free compressed air.

3.1.2 Joint Sealant

Sawed contraction joints and expansion joints in slabs shall be filled with joint sealant, unless otherwise shown. Joint surfaces shall be clean, dry, and free of oil or other foreign material which would adversely affect the bond between sealant and concrete. Joint sealant shall be applied as recommended by the manufacturer of the sealant.

3.1.2.1 Joints With Field-Molded Sealant

Joints shall not be sealed when the sealant material, ambient air, or concrete temperature is less than 40 degrees F. Joints requiring a bond breaker shall be coated with curing compound or with bituminous paint. Bond breaker and back-up material shall be installed where required. Joints shall be primed and filled flush with joint sealant in accordance with the manufacturer's recommendations.

3.2 WATERSTOPS, INSTALLATION AND SPLICES

Waterstops shall be installed at the locations shown to form a continuous

water-tight diaphragm. Adequate provision shall be made to support and completely protect the waterstops during the progress of the work. Any waterstop punctured or damaged shall be repaired or replaced. Exposed waterstops shall be protected during application of form release agents to avoid being coated. Suitable guards shall be provided to protect exposed projecting edges and ends of partially embedded waterstops from damage when concrete placement has been discontinued. Splices shall be made by certified trained personnel using approved equipment and procedures.

3.2.1 Non-Metallic

Fittings shall be shop made using a machine specifically designed to mechanically weld the waterstop. A miter guide, proper fixturing (profile dependant), and portable power saw shall be used to miter cut the ends to be joined to ensure good alignment and contact between joined surfaces. The splicing of straight lengths shall be done by squaring the ends to be joined. Continuity of the characteristic features of the cross section of the waterstop (ribs, tabular center axis, protrusions, etc.) shall be maintained across the splice.

3.2.1.1 Rubber Waterstop

Splices shall be vulcanized or shall be made using cold bond adhesive as recommended by the manufacturer. Splices for TPE-R shall be as specified for PVC.

3.2.1.2 Polyvinyl Chloride Waterstop

Splices shall be made by heat sealing the adjacent waterstop edges together using a thermoplastic splicing iron utilizing a non-stick surface specifically designed for waterstop welding. The correct temperature shall be used to sufficiently melt without charring the plastic. The spliced area, when cooled, shall show no signs of separation, holes, or other imperfections when bent by hand in as sharp an angle as possible.

3.2.1.3 Quality Assurance

Edge welding will not be permitted. Centerbulbs shall be compressed or closed when welding to non-centerbulb type. Waterstop splicing defects which are unacceptable include, but are not limited to the following: 1) Tensile strength less than 80 percent of parent section. 2) Free lap joints. 3) Misalignment of centerbulb, ribs, and end bulbs greater than 1/16 inch. 4) Misalignment which reduces waterstop cross section more than 15 percent. 5) Bond failure at joint deeper than 1/16 inch or 15 percent of material thickness. 6) Misalignment of waterstop splice resulting in misalignment of waterstop in excess of 1/2 inch in 10 feet. 7) Visible porosity in the weld area, including pin holes. 8) Charred or burnt material. 9) Bubbles or inadequate bonding. 10) Visible signs of splice separation when cooled splice is bent by hand at a sharp angle.

3.3 CONSTRUCTION JOINTS

Construction joints are specified in Section 03301 CAST-IN-PLACE STRUCTURAL CONCRETE except that construction joints coinciding with expansion and contraction joints shall be treated as expansion or contraction joints as applicable.

-- End of Section --

SECTION TABLE OF CONTENTS

DIVISION 03 - CONCRETE

SECTION 03201

STEEL BARS FOR CONCRETE REINFORCEMENT

04/93

PART 1 GENERAL

1.1 REFERENCES
1.2 SUBMITTALS

PART 2 PRODUCTS

2.1 MATERIALS
2.1.1 Steel Bars
2.1.2 Accessories
2.1.2.1 Bar Supports
2.1.2.2 Wire Ties
2.2 TESTS, INSPECTIONS, AND VERIFICATIONS
2.2.1 Reinforcement Steel Tests

PART 3 EXECUTION

3.1 FABRICATION AND PLACEMENT
3.1.1 Hooks and Bends
3.1.2 Welding
3.1.3 Placing Tolerances
3.1.3.1 Spacing
3.1.3.2 Concrete Cover
3.1.4 Splicing
3.1.4.1 Lap Splices

-- End of Section Table of Contents --

SECTION 03201

STEEL BARS FOR CONCRETE REINFORCEMENT
04/93

PART 1 GENERAL

1.1 REFERENCES

The publications listed below form a part of this specification to the extent referenced. The publications are referred to in the text by basic designation only.

ACI INTERNATIONAL (ACI)

ACI 315	(1995) ACI Detailing Manual: Section Details and Detailing of Concrete Reinforcement
ACI 318/318R	(1999) Building Code Requirements for Structural Concrete and Commentary

AMERICAN SOCIETY FOR TESTING AND MATERIALS (ASTM)

ASTM A 370	(1995a) Mechanical Testing of Steel Products
ASTM A 615/A 615M	(1996a) Deformed and Plain Billet-Steel Bars for Concrete Reinforcement
ASTM A 616/A 616M	(1996) Rail-Steel Deformed and Plain Bars for Concrete Reinforcement
ASTM A 617/A 617M	(1996a) Axle-Steel Deformed and Plain Bars for Concrete Reinforcement

1.2 SUBMITTALS

Government approval is required for submittals with a "G" designation; submittals not having a "G" designation are for information only. When used, a designation following the "G" designation identifies the office that will review the submittal for the Government. The following shall be submitted in accordance with Section 01330 SUBMITTAL PROCEDURES:

SD-02 Shop Drawings

Fabrication and Placement; G-ED

The Contractor shall submit shop drawings which include: reinforcement steel placement drawings; reinforcement steel schedules showing quantity, size, shape, dimensions, and bending details.

SD-03 Product Data

Materials; G-RE

A system of identification which shows the disposition of specific lots of approved materials in the work shall be established and submitted before completion of the contract.

SD-06 Test Reports

Material; G-RE
Tests, Inspections, and Verifications; G-RE

Certified tests reports of reinforcement steel showing that the steel complies with the applicable specifications shall be furnished for each steel shipment and identified with specific lots prior to placement. Three copies of the heat analyses shall be provided for each lot of steel furnished and the Contractor shall certify that the steel conforms to the heat analyses.

PART 2 PRODUCTS

2.1 MATERIALS

Materials shall conform to the following requirements.

2.1.1 Steel Bars

Steel bars shall comply with the requirements of ASTM A 615/A 615M ASTM A 616/A 616M including Supplementary Requirements, or ASTM A 617/A 617M , deformed, of the grades, sizes and lengths shown.

2.1.2 Accessories

2.1.2.1 Bar Supports

Bar supports shall comply with the requirements of ACI 315. Supports for bars in concrete with formed surfaces exposed to view or to be painted shall be plastic-coated wire, stainless steel or precast concrete supports. Precast concrete supports shall be wedged-shaped, not larger than 3-1/2 by 3-1/2 inches, of thickness equal to that indicated for concrete cover and have an embedded hooked tie-wire for anchorage.

2.1.2.2 Wire Ties

Wire ties shall be 16 gage or heavier black annealed wire.

2.2 TESTS, INSPECTIONS, AND VERIFICATIONS

The Contractor shall have material tests required by applicable standards and specified performed by an approved laboratory and certified to demonstrate that the materials are in conformance with the specifications. Tests, inspections, and verifications shall be performed and certified at the Contractor's expense.

2.2.1 Reinforcement Steel Tests

Mechanical testing of steel shall be in accordance with ASTM A 370 except as otherwise specified or required by the material specifications. Tension tests shall be performed on full cross-section specimens using a gage length that spans the extremities of specimens with welds or sleeves

included. Chemical analyses of steel heats shall show the percentages of carbon, phosphorous, manganese, sulphur and silicon present in the steel.

PART 3 EXECUTION

3.1 FABRICATION AND PLACEMENT

Reinforcement steel and accessories shall be fabricated and placed as specified and shown and approved shop drawings. Fabrication and placement details of steel and accessories not specified or shown shall be in accordance with ACI 315 and ACI 318/318R. Steel shall be fabricated to shapes and dimensions shown, placed where indicated within specified tolerances and adequately supported during concrete placement. At the time of concrete placement all steel shall be free from loose, flaky rust, scale (except tight mill scale), mud, oil, grease or any other coating that might reduce the bond with the concrete.

3.1.1 Hooks and Bends

Steel bars shall be mill or field-bent.All steel shall be bent cold unless authorized. No steel bars shall be bent after being partially embedded in concrete unless indicated or authorized.

3.1.2 Welding

Welding of steel bars will not be permitted.

3.1.3 Placing Tolerances

3.1.3.1 Spacing

The spacing between adjacent bars and the distance between layers of bars may not vary from the indicated position by more than one bar diameter nor more than 1 inch.

3.1.3.2 Concrete Cover

The minimum concrete cover of main reinforcement steel bars shall be as shown on the drawings. The allowable variation for minimum cover shall be as follows:

MINIMUM COVER	VARIATION
6 inch	plus 1/2 inch
4 inch	plus 3/8 inch
3 inch	plus 3/8 inch
2 inch	plus 1/4 inch
1-1/2 inch	plus 1/4 inch
1 inch	plus 1/8 inch
3/4 inch	plus 1/8 inch

3.1.4 Splicing

Splices in steel bars shall be made only as required. Bars may be spliced at alternate or additional locations at no additional cost to the Government subject to approval.

3.1.4.1 Lap Splices

Lap splices shall be used only for bars smaller than size 14. Lapped bars may be placed in contact and securely tied or spaced transversely apart to permit the embedment of the entire surface of each bar in concrete. Lapped bars shall not be spaced farther apart than 1/5 the required length of lap or 6 inches.

-- End of Section --

SECTION TABLE OF CONTENTS

DIVISION 03 - CONCRETE

SECTION 03301

CAST-IN-PLACE STRUCTURAL CONCRETE

03/94

PART 1 GENERAL

1.1 REFERENCES
1.2 SUBMITTALS
1.3 TESTING AND SAMPLING
1.3.1 Preconstruction Sampling and Testing
1.3.2 Construction Testing
1.3.2.1 Chemical Admixtures Storage
1.3.2.2 Cement and Pozzolan
1.3.2.3 Concrete Strength
1.4 DESIGN REQUIREMENTS
1.4.1 Concrete Strength
1.4.2 Maximum Water-Cement (W/C) Ratio
1.5 CONSTRUCTION TOLERANCES
1.5.1 General
1.5.2 Surface Requirements
1.5.3 Appearance

PART 2 PRODUCTS

2.1 MATERIALS
2.1.1 Cementitious Materials
2.1.1.1 Portland Cement
2.1.1.2 High-Early-Strength Portland Cement
2.1.1.3 Pozzolan, Other than Silica Fume
2.1.2 Aggregates
2.1.2.1 General
2.1.2.2 Fine Aggregates
2.1.2.3 Coarse Aggregates
2.1.3 Chemical Admixtures
2.1.3.1 Air-Entraining Admixture
2.1.3.2 Accelerating Admixture
2.1.3.3 Water-Reducing or Retarding Admixture
2.1.3.4 Other Chemical Admixtures
2.1.4 Curing Materials
2.1.4.1 Membrane-Forming Curing Compound
2.1.5 Water
2.1.6 Latex Bonding Compound
2.1.7 Epoxy Resin
2.2 CONCRETE MIXTURE PROPORTIONING
2.2.1 Quality of Mixture
2.2.2 Nominal Maximum-Size Coarse Aggregate
2.2.3 Air Content
2.2.4 Slump
2.2.5 Concrete Proportioning
2.2.6 Required Average Compressive Strength

2.2.6.1 Average Compressive Strength from Test Records
2.2.6.2 Average Compressive Strength without Previous Test Records

PART 3 EXECUTION

3.1 EQUIPMENT
3.1.1 Capacity
3.1.2 Batch Plant
3.1.2.1 Batching Equipment
3.1.2.2 Scales
3.1.2.3 Batching Tolerances
3.1.2.4 Moisture Control
3.1.3 Concrete Mixers
3.1.3.1 Stationary Mixers
3.1.4 Conveying Equipment
3.1.4.1 Buckets
3.1.4.2 Trucks
3.1.4.3 Chutes
3.1.4.4 Belt Conveyors
3.1.4.5 Concrete Pumps
3.1.5 Vibrators
3.2 PREPARATION FOR PLACING
3.2.1 Embedded Items
3.2.2 Concrete on Earth Foundations
3.2.3 Construction Joint Treatment
3.2.3.1 Joint Preparation
3.2.3.2 Air-Water Cutting
3.2.3.3 High-Pressure Water Jet
3.2.3.4 Wet Sandblasting
3.2.3.5 Waste Disposal
3.3 PLACING
3.3.1 Placing Procedures
3.3.2 Placement by Pump
3.3.3 Time Interval Between Mixing and Placing
3.3.4 Cold-Weather Placing
3.3.5 Hot-Weather Placing
3.3.6 Consolidation
3.4 FINISHING
3.4.1 Unformed Surfaces
3.4.1.1 Float Finish
3.4.1.2 Trowel Finish
3.4.2 Formed Surfaces
3.4.3 Formed Surface Repair
3.4.3.1 Classes B Finish
3.4.3.2 Class D Finish
3.4.3.3 Material and Procedure for Repairs
3.5 CURING AND PROTECTION
3.5.1 Duration
3.5.2 Moist Curing
3.5.3 Membrane-Forming Curing Compound
3.5.3.1 Pigmented Curing Compound
3.5.3.2 Nonpigmented Curing Compound
3.5.3.3 Application
3.5.4 Cold-Weather Curing and Protection
3.6 TESTS AND INSPECTIONS
3.6.1 General
3.6.2 Testing and Inspection Requirements
3.6.2.1 Fine Aggregate
3.6.2.2 Coarse Aggregate

3.6.2.3 Scales
3.6.2.4 Batch-Plant Control
3.6.2.5 Concrete Mixture
3.6.2.6 Inspection Before Placing
3.6.2.7 Placing
3.6.2.8 Vibrators
3.6.2.9 Curing
3.6.2.10 Cold-Weather Protection and Sealed Insulation Curing
3.6.2.11 Cold-Weather Protection Corrective Action
3.6.2.12 Mixer Uniformity
3.6.2.13 Mixer Uniformity Corrective Action
3.6.3 Reports
3.7 INSTALLATION OF ANCHOR BARS INTO DRILLED HOLES IN CONCRETE
3.7.1 General
3.7.2 Mixing
3.7.3 Anchor Bar Preparation
3.7.4 Application and Installation
3.7.5 Safety Precautions

-- End of Section Table of Contents --

SECTION 03301

CAST-IN-PLACE STRUCTURAL CONCRETE
03/94

PART 1 GENERAL

1.1 REFERENCES

The publications listed below form a part of this specification to the extent referenced. The publications are referred to in the text by basic designation only.

ACI INTERNATIONAL (ACI)

ACI 117/117R	(1990; Errata) Standard Tolerances for Concrete Construction and Materials
ACI 211.1	(1991) Standard Practice for Selecting Proportions for Normal, Heavyweight, and Mass Concrete
ACI 214	(1977; R 1997) Recommended Practice for Evaluation of Strength Test Results of Concrete
ACI 305R	(1991) Hot Weather Concreting
ACI 318/318R	(1999) Building Code Requirements for Structural Concrete and Commentary

AMERICAN SOCIETY FOR TESTING AND MATERIALS (ASTM)

ASTM C 31/C 31M	(1998) Making and Curing Concrete Test Specimens in the Field
ASTM C 33	(1999ae1) Concrete Aggregates
ASTM C 39/C 39M	(1999) Compressive Strength of Cylindrical Concrete Specimens
ASTM C 42/C 42M	(1999) Obtaining and Testing Drilled Cores and Sawed Beam of Concrete
ASTM C 94/C 94M	(2000) Ready-Mixed Concrete
ASTM C 136	(1996a) Sieve Analysis of Fine and Coarse Aggregates
ASTM C 143/C 143M	(1998) Slump of Hydraulic Cement Concrete
ASTM C 150	(1999) Portland Cement
ASTM C 172	(1999) Sampling Freshly Mixed Concrete
ASTM C 192/C 192M	(1998) Making and Curing Concrete Test

	Specimens in the Laboratory
ASTM C 231	(1997e1) Air Content of Freshly Mixed Concrete by the Pressure Method
ASTM C 260	(1998) Air-Entraining Admixtures for Concrete
ASTM C 309	(1998a) Liquid Membrane-Forming Compounds for Curing Concrete
ASTM C 494/C 494M	(1999a) Chemical Admixtures for Concrete
ASTM C 566	(1997) Total Evaporable Moisture Content of Aggregate by Drying
ASTM C 597	(1997) Pulse Velocity Through Concrete
ASTM C 618	(1999) Coal Fly Ash and Raw or Calcined Natural Pozzolan for Use as a Mineral Admixture in Concrete
ASTM C 803/C 803M	(1997e1) Penetration Resistance of Hardened Concrete
ASTM C 805	(1997) Rebound Number of Hardened Concrete
ASTM C 881	(1999) Epoxy-Resin-Base Bonding Systems for Concrete
ASTM C 1059	(1999) Latex Agents for Bonding Fresh to Hardened Concrete
ASTM C 1064/C 1064M	(1999) Temperature of Freshly Mixed Portland Cement Concrete
ASTM C 1077	(1998) Laboratories Testing Concrete and Concrete Aggregates for Use in Construction and Criteria for Laboratory Evaluation
ASTM D 75	(1987; R 1997) Sampling Aggregates

CORPS OF ENGINEERS (COE)

COE CRD-C 94	(1995) Specification for Surface Retarders
COE CRD-C 104	(1980) Method of Calculation of the Fineness Modulus of Aggregate
COE CRD-C 400	(1963) Requirements for Water for Use in Mixing or Curing Concrete
COE CRD-C 521	(1981) Standard Test Method for Frequency and Amplitude of Vibrators for Concrete

NATIONAL INSTITUTE OF STANDARDS AND TECHNOLOGY (NIST)

NIST HB 44	(1997) NIST Handbook 44: Specifications,

Tolerances, and Other Technical Requirements for Weighing and Measuring Devices

NATIONAL READY-MIXED CONCRETE ASSOCIATION (NRMCA)

NRMCA CPMB 100 (1996) Concrete Plant Standards

1.2 SUBMITTALS

Government approval is required for submittals with a "G" designation; submittals not having a "G" designation are for information only. When used, a designation following the "G" designation identifies the office that will review the submittal for the Government. The following shall be submitted in accordance with Section 01330 SUBMITTAL PROCEDURES:

SD-03 Product Data

Concrete Mixture Proportioning, G-ED

Concrete mixture proportions shall be determined by the Contractor, in accordance with the requirements in paragraph CONCRETE MIXTURE PROPORTIONING, and submitted for approval. The concrete mixture quantities of all ingredients per cubic yard and nominal maximum coarse aggregate size that will be used in the manufacture of each quality of concrete shall be stated. Proportions shall indicate the mass of cement and pozzolan when used, and water; the mass of aggregates in a saturated surface-dry condition; and the quantities of admixtures. The submission shall be accompanied by test reports from a laboratory complying with ASTM C 1077 which show that proportions thus selected will produce concrete of the qualities indicated. No substitution shall be made in the source or type of materials used in the work without additional tests to show that the quality of the new materials and concrete are satisfactory.

Batch Plant;

The Contractor shall submit batch plant data to the Contracting Officer for review for conformance with applicable specifications.

Concrete Mixers;

The Contractor shall submit concrete mixer data which includes the make, type, and capacity of concrete mixers proposed for mixing concrete.

Conveying Equipment;

The conveying equipment and methods for transporting, handling, and depositing the concrete shall be submitted for review by the Contracting Officer for conformance with paragraphs CAPACITY and CONVEYING EQUIPMENT.

Placing Equipment;

All placing equipment and methods shall be submitted for review by the Contracting Officer for conformance with paragraph CAPACITY.

Testing Technicians;
Concrete Construction Inspector;

The Contractor shall submit statements that the concrete testing technicians and the concrete inspectors meet the specified requirements.

Construction Joint Treatment; G-RE,

The method and equipment proposed for joint cleanup and waste disposal shall be submitted for review and approval.

Curing and Protection; G-RE,

The curing medium and methods to be used shall be submitted for review and approval.

Cold-Weather Placing; G-RE,

If concrete is to be placed under cold-weather conditions, the proposed materials, methods, and protection shall be submitted for approval.

Hot-Weather Placing; G-RE,

If concrete is to be placed under hot-weather conditions, the proposed materials and methods shall be submitted for review and approval.

SD-06 Test Reports

Quality of Aggregates; G-RE,

Aggregate quality tests shall be submitted at least 30 days prior to start of concrete placement.

Mixer Uniformity;

The results of the initial mixer uniformity tests shall be submitted at least 5 days prior to the initiation of placing.

Tests and Inspections;

Test results and inspection reports shall be submitted daily and weekly as required in paragraph REPORTS.

SD-07 Certificates

Cementitious Materials; G-RE

Cementitious Materials, including Cement and Pozzolan, will be accepted on the basis of the manufacturer's certification of compliance, accompanied by mill test reports that materials meet the requirements of the specification under which they are furnished. Certification and mill test reports shall be from samples taken from the particular lot furnished. No cementitious materials shall be used until notice of acceptance has been given by the Contracting Officer. Cementitious materials will be subject to check testing from samples obtained at the source, at

transfer points, or at the project site. Material not meeting specifications shall be promptly removed from the site of work.

Air-Entraining Admixture;

Air-Entraining Admixture shall be certified for compliance with all specification requirements.

Other Chemical Admixtures;

Other Chemical Admixtures shall be certified for compliance with all specification requirements.

Membrane-Forming Curing Compound;

Membrane-Forming Curing Compound shall be certified for compliance with all specification requirements.

Epoxy Resin;

Latex Bonding Compound;

Epoxy Resin and Latex Bonding Compound shall be certified for compliance with all specification requirements.

1.3 TESTING AND SAMPLING

1.3.1 Preconstruction Sampling and Testing

Sampling and testing of all materials and concrete, including concrete mix proportions, shall be the responsibility of the Contractor. Initial tests shall be performed and approved, including a five year demonstrable service record for aggregates. Sampling and testing operations shall be performed by an approved commercial testing laboratory hired and paid by the Contractor. The Government may sample and test aggregates or other materials and concrete to determine compliance with the specifications as considered appropriate. Verification tests, if made by the Government of any material, shall in no way relieve the Contractor from the testing responsibilities specified herein.

1.3.2 Construction Testing

The Contractor shall provide facilities and labor as may be necessary for procurement of representative test samples. Samples of aggregates will be obtained at the point of batching in accordance with ASTM D 75. Concrete will be sampled in accordance with ASTM C 172. Slump and air content will be determined in accordance with ASTM C 143/C 143M and ASTM C 231, respectively. Compression test specimens will be made and laboratory cured in accordance with ASTM C 31/C 31M and compression test specimens tested in accordance with ASTM C 39/C 39M. Samples for strength tests of concrete placed each day will be taken not less than once each day, nor less than once for each 150 cu. yd. of concrete. Three specimens will be made from each sample.

1.3.2.1 Chemical Admixtures Storage

Chemical admixtures that have been in storage at the project site for longer than 6 months or that have been subjected to freezing shall be retested at the expense of the Contractor when directed by the Contracting

Officer and shall be rejected if test results are not satisfactory. Chemical admixtures will be accepted based on compliance with the requirements of paragraph CHEMICAL ADMIXTURES.

1.3.2.2 Cement and Pozzolan

If cement or pozzolan is to be obtained from more than one source, the initial notification shall state the estimated amount to be obtained from each source and the proposed schedule of shipments.

a. Prequalified Cement Sources - Cement shall be delivered and used directly from a mill of a producer designated as a qualified source. Samples of cement for check testing shall be taken at the project site or concrete-producing plant for testing at the expense of the Contractor. A list of prequalified cement sources is available from Director, U.S. Army Corps of Engineers, Engineer Research and Development Center - Structures Laboratory, 3909 Halls Ferry Road, Vicksburg, MS 39180-6199, ATTN: CEERD-SC.

b. Prequalified Pozzolan Sources - Pozzolan shall be delivered and used directly from a producer designated as a qualified source. Samples of pozzolan for check testing shall be taken at the project site for testing at the expense of the Contractor. A list of prequalified pozzolan sources is available from the Director, U.S. Army Corps of Engineers, Engineer Research and Development Center - Structures Laboratory, 3909 Halls Ferry Road, Vicksburg, MS 39180-6199, ATTN: CEERD-SC.

c. Nonprequalified Cement Sources - Cement, if not from a prequalified source, shall be sampled at the source and stored in sealed bins pending completion of testing. Sampling, testing, and the shipping inspection from the point of sampling, when the point is other than at the site of the work, will be made by or under the supervision of the Contractor and at its expense. No cement shall be used until notice has been given by the Contracting Officer that test results are satisfactory. In the event of failure, the cement may be resampled and tested at the request of the Contractor, at his expense. When the point of sampling is other than at the site of the work, the fill gates of the sampled bin and conveyances used in shipment sahll be sealed and kept sealed until shipment from the bin has been completed. If tested cement is rehandled at transfer points, the extra cost of inspection shall be at the Contractor's expense. The cost of testing cement excess to project requirements shall also be at the expense of the Contractor.

d. Nonprequalified Pozzolan Sources - Pozzolan, if not from a prequalified source, shall be sampled at the source and stored in sealed bins pending completion of certain tests. Pozzolan will also be sampled at the site when determined necessary. All sampling and testing will be by and at the expense of the Contractor. Release for shipment and approval for use will be based on compliance with 7-day lime-pozzolan strength requirements and other physical and chemical and uniformity requirements for which tests can be completed by the time the 7-day lime-pozzolan strength test is completed. Release for shipment and approval for use on the above basis will be contingent on continuing compliance with the other requirements of the specifications. If a bin fails, the contents may be resampled and tested at the Contractor's expense. In this event the pozzolan may be sampled as it is loaded into cars, trucks, or barges provided they are

kept at the source until released for shipment. Unsealing and resealing of bins and sealing of shipping conveyances will be done by or under the supervision of the Contractor. Shipping conveyances will not be accepted at the site of the work unless received with all seals intact. If pozzolan is damaged in shipment, handling, or storage, it shall be promptly removed from the site of the work. Pozzolan that has not been used within 6 months after testing shall be retested at the expense of the Contractor when directed by the Contracting Officer and shall be rejected if the test results are not satisfactory. If tested pozzolan is rehandled at transfer points, the extra cost of inspection shall be at the Contractor's expense. The cost of testing excess pozzolan shall be at the Contractor's expense.

1.3.2.3 Concrete Strength

Compressive strength test specimens will be made by the Government and cured in accordance with ASTM C 31/C 31M and tested in accordance with ASTM C 39/C 39M. The strength of the concrete will be considered satisfactory so long as the average of all sets of three consecutive test results equals or exceeds the specified compressive strength f'c and no individual test result falls below the specified strength f'c by more than 500 psi. A "test" is defined as the average of two companion cylinders, or if only one cylinder is tested, the results of the single cylinder test. Additional analysis or testing, including nondestructive testing, taking cores and/or load tests may be required at the Contractor's expense when the strength of the concrete in the structure is considered potentially deficient.

a. Investigation of Low-Strength Test Results - When any strength test of standard-cured test cylinders falls below the specified strength requirement by more than 500 psi or if tests of field-cured cylinders indicate deficiencies in protection and curing, steps shall be taken to assure that the load-carrying capacity of the structure is not jeopardized. Nondestructive testing in accordance with ASTM C 597, ASTM C 803/C 803M, or ASTM C 805 may be permitted by the Contracting Officer to estimate the relative strengths at various locations in the structure as an aid in evaluating concrete strength in place or for selecting areas to be cored. Such tests shall not be used as a basis for acceptance or rejection.

b. Testing of Cores - When the strength of concrete in place is considered potentially deficient, cores shall be obtained and tested in accordance with ASTM C 42/C 42M. At least three representative cores shall be taken from each member or area of concrete in place that is considered potentially deficient. The location of cores will be determined by the Contracting Officer to least impair the performance of the structure. Concrete in the area represented by the core testing will be considered adequate if the average strength of the cores is equal to at least 85 percent of the specified strength requirement and if no single core is less than 75 percent of the specified strength requirement.

c. Load Tests - If the core tests are inconclusive or impractical to obtain or if structural analysis does not confirm the safety of the structure, load tests may be directed by the Contracting Officer in accordance with the requirements of ACI 318/318R. Concrete work evaluated by structural analysis or by results of a load test shall be corrected in a manner satisfactory to the Contacting Officer. All investigations, testing, load tests, and correction of deficiencies will be performed and approved by the Contracting Officer at the

expense of the Contractor, except that if all concrete is in compliance with the plans and specifications, the cost of investigations, testing, and load tests will be at the expense of the Government.

1.4 DESIGN REQUIREMENTS

1.4.1 Concrete Strength

Specified compressive strength at 28 days (f'c) shall be 4,000 pounds per square inch.

1.4.2 Maximum Water-Cement (W/C) Ratio

Maximum W/C shall be 0.45.

These W/C's may cause higher strengths than that required by paragraph CONCRETE STRENGTH.

1.5 CONSTRUCTION TOLERANCES

1.5.1 General

The terms used in the following tables shall be as defined in ACI 117/117R. Level and grade tolerance measurements of slabs shall be made as soon as possible after finishing. When forms or shoring are used, the measurements shall be made prior to removal. Tolerances are not cumulative. The most restrictive tolerance controls. Tolerances shall not extend the structure beyond legal boundaries. Except as specified otherwise, plus tolerance increases the amount or dimension to which it applies, or raises a level alignment, and minus tolerance decreases the amount or dimension to which it applied, or lowers a level alignment. A tolerance without sign means plus or minus. Where only one signed tolerance is specified, there is no limit in the other direction.

TOLERANCES FOR EROSION-PROTECTION STRUCTURES,
AND SMALL HYDRAULIC STRUCTURES

(1) Vertical alignment

Exposed surfaces ..... 3/4 in.
Concealed surfaces ..... 1-1/2 in.

(2) Lateral alignment

Centerline alignment ..... 1 in.

(3) Cross-sectional dimensions

Members such as columns, beams,
piers, walls, and others ..... +1/2 in.
..... -1/4 in.

Openings through concrete members ..... 1/2 in.

(5) Relative alignment

Location of openings

TOLERANCES FOR EROSION-PROTECTION STRUCTURES,
AND SMALL HYDRAULIC STRUCTURES

through concrete members ..... 1/2 in.

Formed surface slope with
respect to the specified plane

Watertight joints ..... 1/8 in. in 10 ft
Other exposed surfaces ..... 1/2 in. in 10 ft
Concealed surfaces ..... 1 in. in 10 ft

Unformed exposed surfaces
slopes with respect to the
specified plane ..... 1/4 in. in 10 ft
..... 3/8 in. in 20 ft

1.5.2 Surface Requirements

The surface requirements for the classes of finish required by Section: 03101 FORMWORK FOR CONCRETE shall be as hereinafter specified. Offsets resulting from displaced, misplaced or mismatched forms, or sheathing, or by loose knots in sheathing, or other similar form defects, shall be considered "abrupt" irregularities. Irregularities resulting from warping, unplaneness or similar uniform variations from planeness, or true curvature, shall be considered "gradual" irregularities. "Gradual" irregularities will be checked for compliance with the prescribed limits with a 5-foot template, consisting of a straightedge for plane surfaces and a shaped template for curved or warped surfaces.

Class of Finish	Abrupt Irregularities	Gradual Irregularities
B	1/4 inch	1/2 inch
D	1 inch	1 inch

1.5.3 Appearance

Permanently exposed surfaces shall be cleaned, if stained or otherwise discolored, by a method that does not harm the concrete and that is approved by the Contracting Officer.

PART 2 PRODUCTS

2.1 MATERIALS

2.1.1 Cementitious Materials

Cementitious materials shall be portland cement, or portland cement in combination with pozzolan and shall conform to appropriate specifications listed below.

2.1.1.1 Portland Cement

ASTM C 150, Type I or II low alkali.

2.1.1.2 High-Early-Strength Portland Cement

ASTM C 150, Type III low alkali.

2.1.1.3 Pozzolan, Other than Silica Fume

Pozzolan shall conform to ASTM C 618, Class C or F, with the optional requirements for multiple factor, drying shrinkage, and uniformity of Table 2A of ASTM C 618. Table 1A requirement for maximum alkalies shall apply. If pozzolan is used, it shall never be less than 15 percent nor more than 35 percent by weight of the total cementitious material.

2.1.2 Aggregates

2.1.2.1 General

Fine and coarse aggregates shall conform to the grading requirements of ASTM C 33 including the restrictions specified herein. Quality of Aggregates: Aggregates proposed for use shall have a demonstrable 5 year service record on three structures with exposures similar to those which will be encountered on this project.

2.1.2.2 Fine Aggregates

Fine aggregate shall consist of washed natural sand, sand-gravel, or manufactured sands. Fine aggregate shall conform to the gradation requirements specified in ASTM C 33 paragraph 5, "Grading." Relaxation of gradation and fineness modulus shall not be permitted. Fine aggregate shall meet the soundness requirements specified in ASTM C 33 paragraph 7 "Soundness" when tested with magnesium sulfate and no exceptions will be permitted.

2.1.2.3 Coarse Aggregates

Coarse aggregate shall consist of quarried Sioux quartzite. Coarse aggregates shall conform to the requirements of ASTM C 33, Table 3, Class 5S including the requirement that no relaxation from the limits listed be permitted.

2.1.3 Chemical Admixtures

Chemical admixtures to be used, when required or permitted, shall conform to the appropriate specification listed.

2.1.3.1 Air-Entraining Admixture

The air-entraining admixture shall conform to ASTM C 260 and shall consistently cause the concrete to have an air content in the specified ranges under field conditions.

2.1.3.2 Accelerating Admixture

Accelerators shall meet the requirements of ASTM C 494/C 494M, Type C or E, except that calcium chloride or admixtures containing calcium chloride shall not be used.

2.1.3.3 Water-Reducing or Retarding Admixture

a. Water-Reducing or Retarding Admixtures: ASTM C 494/C 494M, Type A, B, or D, except that the 6-month and 1-year compressive strength tests are waived.

b. High-Range Water Reducing Admixture: ASTM C 494/C 494M, Type F or G except that the 6-month and 1-year strength requirements shall be waived. The admixture may be used only when approved by the

Contracting Officer, such approval being contingent upon particular mixture control as described in the Contractor's Quality Control Plan.

2.1.3.4 Other Chemical Admixtures

Other chemical admixtures shall be permitted only with the written permission of the Contracting Officer.

2.1.4 Curing Materials

2.1.4.1 Membrane-Forming Curing Compound

The membrane-forming curing compound shall conform to ASTM C 309, Type 1-D or 2. Nonpigmented compound shall contain a fugitive dye and shall have the reflective requirements in ASTM C 309 waived.

2.1.5 Water

Water for mixing and curing shall be fresh, clean, potable, and free of injurious amounts of oil, acid, salt, or alkali, except that nonpotable water may be used if it meets the requirements of COE CRD-C 400.

2.1.6 Latex Bonding Compound

Latex bonding compound agents for bonding fresh to hardened concrete shall conform to ASTM C 1059.

2.1.7 Epoxy Resin

Epoxy resin for use in repairs shall conform to ASTM C 881, Type III, Grade I or II. Epoxy resin for embedding anchor bars into drilled holes in concrete shall conform to ASTM C 881, Type IV, Grade 3, and Class as appropriate for the application temperatures expected.

2.2 CONCRETE MIXTURE PROPORTIONING

2.2.1 Quality of Mixture

For each portion of the structure, mixture proportions shall be selected so that the strength and W/C requirements listed in paragraph DESIGN REQUIREMENTS are met.

2.2.2 Nominal Maximum-Size Coarse Aggregate

Except for the Clifton Avenue box culvert, the grading requirement for coarse aggregate shall conform to ASTM C 33 Table 2 size number 4 (1-1/2 inch to 3/4 inch), except size number 67 (3/4 inch to number 4) shall be used when any of the following conditions exist: the narrowest dimension between sides of forms is less than 7-1/2 inches, the depth of the slab is less than 4 inches, or the minimum clear spacing between reinforcing is less than 2-1/4 inches. For the Clifton Avenue box culvert, the grading requirement for coarse aggregate shall conform to ASTM C 33 Table 2 size number 5 (1 inch to 1/2 inch).

2.2.3 Air Content

Air content as delivered to the forms and as determined by ASTM C 231 shall be between 4 and 7 percent.

2.2.4 Slump

The slump shall be determined in accordance with ASTM C 143/C 143M and shall be within the range of 1 to 4 inch. Where placement by pump is approved, the slump shall not exceed 6 inches.

2.2.5 Concrete Proportioning

Trial batches and testing requirements for various qualities of concrete specified shall be the responsibility of the Contractor. Samples of aggregates shall be obtained in accordance with the requirements of ASTM D 75. Samples of materials other than aggregate shall be representative of those proposed for the project and shall be accompanied by the manufacturer's test reports indicating compliance with applicable specified requirements. Trial mixtures having proportions, consistencies, and air content suitable for the work shall be made based on methodology described in ACI 211.1, using at least three different water-cement ratios, which will produce a range of strength encompassing those required for the work. The maximum water-cement ratios required in paragraph MAXIMUM WATER-CEMENT RATIO will be converted to a weight ratio of water to cement plus pozzolan by mass, as described in ACI 211.1. Trial mixtures shall be proportioned for maximum permitted slump and air content with due consideration to the approved conveying and placement method. The temperature of concrete in each trial batch shall be reported. For each water-cement ratio, at least three test cylinders for each test age shall be made and cured in accordance with ASTM C 192/C 192M. They shall be tested at 7 days and at the design age specified in paragraph DESIGN REQUIREMENTS in accordance with ASTM C 39/C 39M. From these test results, a curve will be plotted showing the relationship between water-cement ratio and strength.

2.2.6 Required Average Compressive Strength

In meeting the strength requirements specified in paragraph CONCRETE STRENGTH, the selected mixture proportion shall produce a required average compressive strength f'cr exceeding the specified strength f'c by the amount indicated below.

2.2.6.1 Average Compressive Strength from Test Records

Where a concrete production facility has test records, a standard deviation shall be established in accordance with the applicable provisions of ACI 214. Test records from which a standard deviation is calculated shall represent materials, quality control procedures, and conditions similar to those expected, shall represent concrete produced to meet a specified strength or strengths (f'c) within 1,000 psi of that specified for proposed work, and shall consist of at least 30 consecutive tests. A strength test shall be the average of the strengths of two cylinders made from the same sample of concrete and tested at 28 days or at another test age designated for determination of f'c.

Required average compressive strength f'cr used as the basis for selection of concrete proportions shall be the larger of the equations that follow using the standard deviation as determined above:

$$f'cr = f'c + 1.34S$$
$$f'cr = f'c + 2.33S - 500$$

Where S = standard deviation

Where a concrete production facility does not have test records meeting the requirements above but does have a record based on 15 to 29 consecutive tests, a standard deviation shall be established as the product of the calculated standard deviation and a modification factor from the following table:

NUMBER OF TESTS*	MODIFICATION FACTOR FOR STANDARD DEVIATION
less than 15	Use tabulation in paragraph DETERMINING REQUIRED AVERAGE STRENGTH
15	1.16
20	1.08
25	1.03
30 or more	1.00

*Interpolate for intermediate numbers of tests.

2.2.6.2 Average Compressive Strength without Previous Test Records

When a concrete production facility does not have sufficient field strength test records for calculation of the standard deviation, the required average strength fcr shall be determined as follows:

If the specified compressive strength f'c is less than 3,000 psi,

$$f'cr = f'c + 1,000$$

If the specified compressive strength f'c is 3,000 to 5,000 psi,

$$f'cr = f'c + 1,200$$

If the specified compressive strength f'c is over 5,000 psi,

$$f'cr = f'c + 1,400$$

PART 3 EXECUTION

3.1 EQUIPMENT

3.1.1 Capacity

The batching, mixing, conveying, and placing equipment shall have a capacity suitable for the work required by the contractor.

3.1.2 Batch Plant

Batch plant shall conform to the requirements of NRMCA CPMB 100 and as specified; however, rating plates attached to batch plant equipment are not required.

3.1.2.1 Batching Equipment

The batching controls shall be semiautomatic, or automatic. The semiautomatic batching system shall be provided with interlocks such that the discharge device cannot be actuated until the indicated material is within the applicable tolerance. The batching system shall be equipped with an accurate recorder or recorders that meet the requirements of NRMCA CPMB 100. Separate bins or compartments shall be provided for each size

group of aggregate and cement, and pozzolan. Aggregates shall be weighed either in separate weigh batchers with individual scales or cumulatively in one weigh batcher on one scale. Aggregate shall not be weighed in the same batcher with cement. If measured by mass, the mass of the water shall not be weighed cumulatively with another ingredient. Water batcher filling and discharging valves shall be so interlocked that the discharge valve cannot be opened before the filling valve is fully closed. An accurate mechanical device for measuring and dispensing each admixture shall be provided. Each dispenser shall be interlocked with the batching and discharging operation of the water so that each admixture is separately batched and discharged automatically in a manner to obtain uniform distribution throughout the batch in the specified mixing period. Admixtures shall not be combined prior to introduction in water. The plant shall be arranged so as to facilitate the inspection of all operations at all times. Suitable facilities shall be provided for obtaining representative samples of aggregates from each bin or compartment. All filling ports for cementitious materials bins or silos shall be clearly marked with a permanent sign stating the contents.

3.1.2.2 Scales

The equipment for batching by mass shall conform to the applicable requirements of NIST HB 44, except that the accuracy shall be plus or minus 0.2 percent of scale capacity. The Contractor shall provide standard test weights and any other auxiliary equipment required for checking the operating performance of each scale or other measuring devices. Tests shall be made at the frequency required in paragraph TESTS AND INSPECTIONS, and in the presence of a government inspector.

3.1.2.3 Batching Tolerances

a. Weighing Tolerances

MATERIAL	PERCENT OF REQUIRED MASS
Cementitious materials	0 to plus 2
Aggregate	plus or minus 2
Water	plus or minus 1
Chemical admixture	0 to plus 6

3.1.2.4 Moisture Control

The plant shall be capable of ready adjustment to compensate for the varying moisture content of the aggregates and to change the masses of the materials being batched.

3.1.3 Concrete Mixers

The concrete mixers shall not be charged in excess of the capacity recommended by the manufacturer. The mixers shall be operated at the drum or mixing blade speed designated by the manufacturer. The mixers shall be maintained in satisfactory operating condition, and the mixer drums shall be kept free of hardened concrete. Should any mixer at any time produce unsatisfactory results, its use shall be promptly discontinued until it is repaired.

3.1.3.1 Stationary Mixers

Concrete plant mixers shall be tilting, nontilting, horizontal-shaft,

vertical-shaft, or pugmill and shall be provided with an acceptable device to lock the discharge mechanism until the required mixing time has elapsed. The mixing time and uniformity shall conform to all the requirements in ASTM C 94/C 94M applicable to central-mixed concrete.

3.1.4 Conveying Equipment

The conveying equipment shall conform to the following requirements.

3.1.4.1 Buckets

The interior hopper slope shall be not less than 58 degrees from the horizontal, the minimum dimension of the clear gate opening shall be at least five times the nominal maximum-size aggregate, and the area of the gate opening shall not be less than 2 square feet. The maximum dimension of the gate opening shall not be greater than twice the minimum dimension. The bucket gates shall be essentially grout tight when closed and may be manually, pneumatically, or hydraulically operated except that buckets larger than 2 cubic yards shall not be manually operated. The design of the bucket shall provide means for positive regulation of the amount and rate of deposit of concrete in each dumping position.

3.1.4.2 Trucks

Truck mixers operating at agitating speed or truck agitators used for transporting plant-mixed concrete shall conform to the requirements of ASTM C 94/C 94M. Nonagitating equipment shall not be used. Covers shall be provided for protection against the weather.

3.1.4.3 Chutes

When concrete can be placed directly from a truck mixer, agitator, or nonagitating equipment, the chutes attached to this equipment by the manufacturer may be used. A discharge deflector shall be used when required by the Contracting Officer. Separate chutes and other similar equipment will not be permitted for conveying concrete.

3.1.4.4 Belt Conveyors

Belt conveyors shall be designed and operated to assure a uniform flow of concrete from mixer to final place of deposit without segregation of ingredients or loss of mortar and shall be provided with positive means for preventing segregation of the concrete at the transfer points and the point of placing. Belt conveyors shall be constructed such that the idler spacing shall not exceed 36 inches. The belt speed shall be a minimum of 300 feet per minute and a maximum of 750 feet per minute. If concrete is to be placed through installed horizontal or sloping reinforcing bars, the conveyor shall discharge concrete into a pipe or elephant trunk that is long enough to extend through the reinforcing bars.

3.1.4.5 Concrete Pumps

Concrete may be conveyed by positive displacement pump when approved. The pumping equipment shall be piston or squeeze pressure. The pipeline shall be rigid steel pipe or heavy-duty flexible hose. The inside diameter of the pipe shall be at least three times the nominal maximum-size coarse aggregate in the concrete mixture to be pumped but not less than 4 inches. Aluminum pipe shall not be used.

3.1.5 Vibrators

Vibrators of the proper size, frequency, and amplitude shall be used for the type of work being performed in conformance with the following requirements:

APPLICATION	HEAD DIAMETER INCHES	FREQUENCY VPM	AMPLITUDE INCHES
Thin walls, beams, etc.	1-1/4 to 2-1/2	9,000 to 13,500	0.02 to 0.04
General construction	2 to 3-1/2	8,000 to 12,000	0.025 to 0.05

The frequency and amplitude shall be determined in accordance with COE CRD-C 521.

3.2 PREPARATION FOR PLACING

3.2.1 Embedded Items

Before placement of concrete, care shall be taken to determine that all embedded items are firmly and securely fastened in place as indicated on the drawings, or required. Embedded items shall be free of oil and other foreign matter such as loose coatings or rust, paint, and scale. The embedding of wood in concrete will be permitted only when specifically authorized or directed. Voids in sleeves, inserts, and anchor slots shall be filled temporarily with readily removable materials to prevent the entry of concrete into voids. Welding, including tack welding, will not be permitted on embedded metals within 2 feet of the surface of the concrete.

3.2.2 Concrete on Earth Foundations

Earth surfaces upon which concrete is to be placed shall be clean, damp, and free from debris, frost, ice, and standing or running water. Prior to placement of concrete, the earth foundation shall have been satisfactorily compacted in accordance with Section 02315.

3.2.3 Construction Joint Treatment

Construction joint treatment shall conform to the following requirements.

3.2.3.1 Joint Preparation

Concrete surfaces to which additional concrete is to be bonded shall be prepared for receiving the next lift or adjacent concrete by cleaning with either air-water cutting, sandblasting, high-pressure water jet, or other approved method. Air-water cutting will not be permitted on formed surfaces or surfaces congested with reinforcing steel. Regardless of the method used, the resulting surfaces shall be free from all laitance and inferior concrete so that clean, well bonded coarse aggregate is exposed uniformly throughout the lift surface. The edges of the coarse aggregate shall not be undercut. The surface shall be washed clean again as the last operation prior to placing the next lift. There shall be no standing water on the surface upon which concrete is placed.

3.2.3.2 Air-Water Cutting

Air-water cutting of a construction joint shall be performed at the proper time and only on horizontal construction joints. The air pressure used in

the jet shall be 90 to 110 psi, and the water pressure shall be just sufficient to bring the water into effective influence of the air pressure. When approved by the Contracting Officer, a retarder complying with the requirements of COE CRD-C 94 may be applied to the surface of the lift to prolong the period of time during which air-water cutting is effective. Prior to receiving approval, the Contractor shall furnish samples of the material to be used and shall demonstrate the method to be used in applications. After cutting, the surface shall be washed and rinsed as long as there is any trace of cloudiness of the wash water. Where necessary to remove accumulated laitance, coatings, stains, debris, and other foreign material, high-pressure water jet or sandblasting will be required as the last operation before placing the next lift.

3.2.3.3 High-Pressure Water Jet

A stream of water under a pressure of not less than 3,000 psi may be used for cleaning. Its use shall be delayed until the concrete is sufficiently hard so that only the surface skin or mortar is removed and there is no undercutting of coarse-aggregate particles. If the water jet is incapable of a satisfactory cleaning, the surface shall be cleaned by sandblasting.

3.2.3.4 Wet Sandblasting

This method may be used when the concrete has reached sufficient strength to prevent undercutting of the coarse aggregate particles. The surface of the concrete shall then be washed thoroughly to remove all loose materials.

3.2.3.5 Waste Disposal

The method used in disposing of waste water employed in cutting, washing, and rinsing of concrete surfaces shall be such that the waste water does not stain, discolor, or affect exposed surfaces of the structures, or damage the environment of the project area. The method of disposal shall be subject to approval.

3.3 PLACING

3.3.1 Placing Procedures

The surfaces of horizontal construction joints shall be kept continuously wet for the first 12 hours during the 24-hour period prior to placing concrete. Surfaces may be dampened immediately before placement if necessary. Concrete placement will not be permitted when, in the opinion of the Contracting Officer, weather conditions prevent proper placement and consolidation. Concrete shall be deposited as close as possible to its final position in the forms and, in so depositing, there shall be no vertical drop greater than 5 feet except where suitable equipment is provided to prevent segregation and where specifically authorized. Depositing of the concrete shall be so regulated that it may be effectively consolidated in horizontal layers 2.0 feet or less in thickness with a minimum of lateral movement. The amount deposited in each location shall be that which can be readily and thoroughly consolidated. Sufficient placing capacity shall be provided so that concrete placement can be kept plastic and free of cold joints while concrete is being placed. Concrete shall be placed by methods that will prevent segregation or loss of ingredients. Any concrete transferred from one conveying device to another shall be passed through a hopper that is conical in shape. The concrete shall not be dropped vertically more than 5 feet, except where a properly designed and sized elephant truck with rigid drop chute bottom section is

provided to prevent segregation and where specifically authorized. In no case will concrete be discharged to free-fall through reinforcing bars.

3.3.2 Placement by Pump

When concrete is to be placed by pump, the nominal maximum-size coarse aggregate shall not be reduced to accommodate the pumps. The distance to be pumped shall not exceed limits recommended by the pump manufacturer. The concrete shall be supplied to the concrete pump continuously. When pumping is completed, concrete remaining in the pipeline shall be ejected without contamination of concrete in place. After each operation, equipment shall be thoroughly cleaned, and flushing water shall be wasted outside of the forms. Grout used to lubricate the pumping equipment at the beginning of the placement will not be incorporated into the placement.

3.3.3 Time Interval Between Mixing and Placing

Concrete shall be placed within 30 minutes after discharge into nonagitating equipment. When concrete is truck-mixed or when a truck mixer or agitator is used for transporting concrete mixed by a concrete plant mixer, the concrete shall be delivered to the site of the work, and discharge shall be completed within 1-1/2 hours after introduction of the cement to the aggregates. When the length of haul makes it impossible to deliver truck-mixed concrete within these time limits, batching of cement and a portion of the mixing water shall be delayed until the truck mixer is at or near the construction site.

3.3.4 Cold-Weather Placing

When cold-weather placing of concrete is likely to be subjected to freezing temperatures before the expiration of the curing period, it shall be placed in accordance with procedures previously submitted in accordance with paragraph SUBMITTALS. The ambient temperature of the space adjacent to the concrete placement and surfaces to receive concrete shall be above 32 degrees F. The placing temperature of the concrete having a minimum dimension less than 12 inches shall be between 55 and 75 degrees F when measured in accordance with ASTM C 1064/C 1064M. The placing temperature of the concrete having a minimum dimension greater than 12 inches shall be between 50 and 70 degrees F. Heating of the mixing water or aggregates will be required to regulate the concrete-placing temperatures. Materials entering the mixer shall be free from ice, snow, or frozen lumps. Salt, chemicals, or other materials shall not be mixed with the concrete to prevent freezing.

3.3.5 Hot-Weather Placing

Concrete shall be properly placed and finished with procedures previously submitted in accordance with paragraph SUBMITTALS. The concrete-placing temperature shall not exceed 85 degrees F when measured in accordance with ASTM C 1064/C 1064M. Cooling of the mixing water and aggregates, or both, may be required to obtain an adequate placing temperature. A retarder meeting the requirements of paragraph WATER-REDUCING OR RETARDING ADMIXTURES may be used to facilitate placing and finishing. Steel forms and reinforcement shall be cooled prior to concrete placement when steel temperatures are greater than 120 degrees F. Conveying and placing equipment shall be cooled if necessary to maintain proper concrete-placing temperature.

3.3.6 Consolidation

Immediately after placement, each layer of concrete, including flowing concrete, shall be consolidated by internal vibrating equipment. Vibrators shall not be used to transport concrete within the forms. Hand spading may be required, if necessary, with internal vibrating along formed surfaces permanently exposed to view. Form or surface vibrators shall not be used unless specifically approved. The vibrator shall be inserted vertically at uniform spacing over the entire area of placement. The distance between insertions shall be approximately 1-1/2 times the radius of action of the vibrator. The vibrator shall penetrate rapidly to the bottom of the layer and at least 6 inches into the preceding unhardened layer if such exists. It shall be held stationary until the concrete is consolidated and then withdrawn slowly.

3.4 FINISHING

The ambient temperature of spaces adjacent to surfaces being finished shall be not less than 40 degrees F. In hot weather when the rate of evaporation of surface moisture, as determined by use of Figure 2.1.5 of ACI 305R, may reasonably be expected to exceed 0.2 pounds per square foot per hour. Provisions for windbreaks, shading, fog spraying, or wet covering with a light-colored material shall be made in advance of placement, and such protective measures shall be taken as quickly as finishing operations will allow. All unformed surfaces that are not to be covered by additional concrete or backfill shall have a float finish. Additional finishing shall be as specified below and shall be true to the elevation shown in the drawings. Surfaces to receive additional concrete or backfill shall be brought to the elevation shown on the drawings and left true and regular. Exterior surfaces shall be sloped for drainage unless otherwise shown in the drawing or as directed. Joints shall be carefully made with a jointing or edging tool. The finished surfaces shall be protected from stains or abrasions. Grate tampers or jitterbugs shall not be used.

3.4.1 Unformed Surfaces

3.4.1.1 Float Finish

Surfaces shall be screeded and darbied or bullfloated to bring the surface to the required finish level with no coarse aggregate visible. No water, cement, or mortar shall be added to the surface during the finishing operation. The concrete, while still green but sufficiently hardened to bear a man's weight without deep imprint, shall be floated to a true and even plane. Floating may be performed by use of suitable hand floats or power-driven equipment. Hand floats shall be made of magnesium or aluminum.

3.4.1.2 Trowel Finish

A trowel finish shall be applied to the following surfaces: stilling basin slab and tops of baffle blocks, floor of box culvert, and tops of retaining walls. Concrete surfaces shall be finished with a float finish, and after surface moisture has disappeared, the surface shall be troweled to a smooth, even, dense finish free from blemishes including trowel marks.

3.4.2 Formed Surfaces

Unless another finish is specified, surfaces shall be left with the texture imparted by the forms except that defective surfaces shall be repaired as described in paragraph FORMED SURFACE REPAIR.
Uniform color of the concrete shall be maintained by use of only one

mixture without changes in materials or proportions for any structure or portion of structure that is exposed to view or on which a special finish is required. The form panels used to produce the finish shall be orderly in arrangement, with joints between panels planned in approved relation to openings, building corners, and other architectural features. Forms shall not be reused if there is any evidence of surface wear or defects that would impair the quality of the surface.

3.4.3 Formed Surface Repair

After removal of forms, all ridges, lips, and bulges on surfaces permanently exposed shall be removed. All repairs shall be completed within 48 hours after form removal.

3.4.3.1 Classes B Finish

Surfaces listed in Section 03101 FORMWORK FOR CONCRETE and as shown to have class B finish shall have surface defects repaired as follows: defective areas, voids, and honeycombs smaller than 16 square inches in area and less than 1/2 inch deep and bug holes exceeding 1/2 inch in diameter shall be chipped and filled with dry-packed mortar. Holes left by removal of tie rods shall be reamed and filled with dry-packed mortar as specified in paragraph MATERIAL AND PROCEDURE FOR REPAIRS. Defective and unsound concrete areas larger than described shall be defined by 1/2 inch deep dovetailed saw cuts in a rectangular pattern with lines parallel to the formwork, the defective concrete removed by chipping, and the void repaired with replacement concrete. The prepared area shall be brush-coated with an epoxy resin meeting the requirements of paragraph EPOXY RESIN, a latex bonding agent meeting the requirements of paragraph LATEX BONDING COMPOUND, or a neat cement grout after dampening the area with water. The void shall be filled with replacement concrete in accordance with paragraph MATERIAL AND PROCEDURE FOR REPAIRS.

3.4.3.2 Class D Finish

Surfaces listed in Section 03101 FORMWORK FOR CONCRETE and as shown to have class D finish shall have surface defects repaired as follows: defective areas, voids, and honeycombs greater than 48 square inches in area or more than 2 inches deep shall be defined by 1/2 inch deep dovetailed saw cuts in a rectangular pattern, the defective concrete removed by chipping and the void repaired with replacement concrete. The prepared area shall be brush-coated with an epoxy resin meeting the requirements of paragraph EPOXY RESIN, a latex bonding agent meeting the requirements of paragraph LATEX BONDING COMPOUND, or a neat cement grout after dampening the area with water. The void shall be filled with replacement concrete in accordance with paragraph MATERIAL AND PROCEDURE FOR REPAIRS.

3.4.3.3 Material and Procedure for Repairs

The cement used in the dry-packed mortar or replacement concrete shall be a blend of the cement used for production of project concrete and white portland cement properly proportioned so that the final color of the mortar or concrete will match adjacent concrete. Trial batches shall be used to determine the proportions required to match colors. Dry-packed mortar shall consist of one part cement to two and one-half parts fine aggregate. The fine aggregate shall be that used for production of project concrete. The mortar shall be remixed over a period of at least 30 minutes without addition of water until it obtains the stiffest consistency that will permit placing. Mortar shall be thoroughly compacted into the prepared

void by tamping, rodding, ramming, etc. and struck off to match adjacent concrete. Replacement concrete shall be produced using project materials and shall be proportioned by the Contracting Officer. It shall be thoroughly compacted into the prepared void by internal vibration, tamping, rodding, ramming, etc. and shall be struck off and finished to match adjacent concrete. Forms shall be used to confine the concrete. If an expanding agent is used in the repair concrete, the repair shall be thoroughly confined on all sides including the top surface. Metal tools shall not be used to finish permanently exposed surfaces. The repaired areas shall be cured for 7 days. The temperature of the in situ concrete, adjacent air, and replacement mortar or concrete shall be above40 degrees F during placement, finishing, and curing. Other methods and materials for repair may be used only when approved in writing by the Contracting Officer. Repairs of the so called "plaster-type" will not be permitted.

3.5 CURING AND PROTECTION

3.5.1 Duration

The length of the curing period shall be determined by the type of cementitious material, as specified below. Concrete shall be cured by an approved method.

Type I portland cement	7 days
Type II portland cement	14 days
Type III portland cement	3 days

Immediately after placement, concrete shall be protected from premature drying, extremes in temperatures, rapid temperature change, and mechanical damage. All materials and equipment needed for adequate curing and protection shall be available and at the placement site prior to the start of concrete placement. Concrete shall be protected from the damaging effects of rain for 12 hours and from flowing water for 14 days (7 days with Type III cement). No fire or excessive heat including welding shall be permitted near or in direct contact with concrete or concrete embedments at any time.

3.5.2 Moist Curing

Moist-cured concrete shall be maintained continuously, not periodically, wet for the entire curing period. If water or curing materials stain or discolor concrete surfaces that are to be permanently exposed, they shall be cleaned as required in paragraph APPEARANCE. Where wooden form sheathing is left in place during curing, the sheathing shall be kept wet at all times. Where steel forms are left in place during curing, the forms shall be carefully broken loose from the hardened concrete and curing water continuously applied into the void so as to continuously saturate the entire concrete surface. Horizontal surfaces may be moist cured by ponding, by covering with a minimum uniform thickness of 2 inches of continuously saturated sand, or by covering with saturated nonstaining burlap or cotton mats. Horizontal construction joints may be allowed to dry for 12 hours immediately prior to the placing of the following lift.

3.5.3 Membrane-Forming Curing Compound

Concrete may be cured with an approved membrane-forming curing compound in lieu of moist curing except that membrane curing will not be permitted on any surface to which other concrete is to be bonded, on any surface containing protruding steel reinforcement, on an abrasive aggregate finish,

or any surface maintained at curing temperature by use of free steam. The curing compound selected shall be compatible with any subsequent paint, roofing, waterproofing, or flooring specified.

3.5.3.1 Pigmented Curing Compound

A pigmented curing compound meeting the requirements of the above paragraph MEMBRANE-FORMING CURING COMPOUND may be used on surfaces that will not be exposed to view when the project is completed.

3.5.3.2 Nonpigmented Curing Compound

A nonpigmented curing compound containing a fugitive dye may be used on surfaces that will be exposed to view when the project is completed. Concrete cured with nonpigmented curing compound must be shaded from the sun for the first 3 days when the ambient temperature is 90 degrees F or higher.

3.5.3.3 Application

The curing compound shall be applied to formed surfaces immediately after the forms are removed and prior to any patching or other surface treatment except the cleaning of loose sand, mortar, and debris from the surface. The surfaces shall be thoroughly moistened with water, and the curing compound applied as soon as free water disappears. The curing compound shall be applied to unformed surfaces as soon as free water has disappeared and bleeding has stopped. The curing compound shall be applied in a two-coat continuous operation by approved motorized power-spraying equipment operating at a minimum pressure of 75 psi, at a uniform coverage of not more than 400 square feet per gallon for each coat, and the second coat shall be applied perpendicular to the first coat. Concrete surfaces that have been subjected to rainfall within 3 hours after curing compound has been applied shall be resprayed by the method and at the coverage specified. All concrete surfaces on which the curing compound has been applied shall be adequately protected for the duration of the entire curing period from pedestrian and vehicular traffic and from any other cause that will disrupt the continuity of the curing membrane.

3.5.4 Cold-Weather Curing and Protection

When the daily outdoor low temperature is less than 32 degrees F, the temperature of the concrete shall be maintained above 40 degrees F for the first 7 days after placing. In addition, during the period of protection removal, the air temperature adjacent to the concrete surfaces shall be controlled so that concrete near the surface will not be subjected to a temperature differential of more than 25 degrees F as determined by observation of ambient and concrete temperatures indicated by suitable temperatures measuring devices furnished by the Contractor as required and installed adjacent to the concrete surface and 2 inches inside the surface of the concrete. The installation of the thermometers shall be made by the Contractor at such locations as may be directed.

3.6 TESTS AND INSPECTIONS

Tests and inspections shall conform to the following requirements.

3.6.1 General

The Contractor shall perform the inspections and tests described below,

and, based upon the results of these inspections and tests, he shall take the action required and submit reports as required. When, in the opinion of the Contracting Officer, the concreting operation is out of control, concrete placement shall cease. The laboratory performing the tests shall be on site and shall conform with ASTM C 1077. The individuals who sample and test concrete or the constituents of concrete as required in this specification shall have demonstrated a knowledge and ability to perform the necessary test procedures equivalent to the ACI minimum guidelines for certification of Concrete Field Testing Technicians, Grade I. The individuals who perform the inspection of concrete construction shall have demonstrated a knowledge and ability equivalent to the ACI minimum guidelines for certification of Concrete Construction Inspector (CTCI). The Government will inspect the laboratory, equipment, and test procedures prior to start of concreting operations and at least once per year thereafter for conformance with ASTM C 1077.

3.6.2 Testing and Inspection Requirements

3.6.2.1 Fine Aggregate

a. Grading - At least once during each shift when the concrete plant is operating, there shall be one sieve analysis and fineness modulus determination in accordance with ASTM C 136 and COE CRD-C 104 for the fine aggregate or for each size range of fine aggregate if it is batched in more than one size or classification. The location at which samples are taken may be selected by the Contractor as the most advantageous for control. However, the Contractor is responsible for delivering fine aggregate to the mixer within specification limits.

b. Corrective Action for Fine Aggregate Grading - When the amount passing on any sieve is outside the specification limits, the fine aggregate shall be immediately resampled and retested. If there is another failure on any sieve, the fact shall immediately be reported to the Contracting Officer.

c. Moisture Content Testing - There shall be at least four tests for moisture content in accordance with ASTM C 566 during each 8-hour period of mixing plant operation. The times for the tests shall be selected randomly within the 8-hour period. An additional test shall be made whenever the slump is shown to be out of control or excessive variation in workability is reported by the placing foreman. The results of tests for moisture content shall be used to adjust the added water in the control of the batch plant.

d. Moisture Content Corrective Action - Whenever the moisture content of the fine aggregate changes by 0.5 percent or more, the scale settings for the fine-aggregate batcher and water batcher shall be adjusted (directly or by means of a moisture compensation device) if necessary to maintain the specified slump.

3.6.2.2 Coarse Aggregate

a. Grading - At least once during each shift in which the concrete plant is operating, there shall be a sieve analysis in accordance with ASTM C 136 for each size of coarse aggregate. The location at which samples are taken may be selected by the Contractor as the most advantageous for production control. However, the Contractor shall be responsible for delivering the aggregate to the mixer within specification limits. A test record of samples of aggregate taken at

the same locations shall show the results of the current test as well as the average results of the five most recent tests including the current test. The Contractor may adopt limits for control which are coarser than the specification limits for samples taken at locations other than as delivered to the mixer to allow for degradation during handling.

b. Corrective Action for Grading - When the amount passing any sieve is outside the specification limits, the coarse aggregate shall be immediately resampled and retested. If the second sample fails on any sieve, that fact shall be reported to the Contracting Officer. Where two consecutive averages of five tests are outside specification limits, the operation shall be considered out of control and shall be reported to the Contracting Officer. Concreting shall be stopped and immediate steps shall be taken to correct the grading.

c. Coarse Aggregate Moisture Content - A test for moisture content of each size group of coarse aggregate shall be made at least twice per week. When two consecutive readings for smallest size coarse aggregate differ by more than 1.0 percent, frequency of testing shall be increased to that specified above for fine aggregate, until the difference falls below 1.0 percent.

d. Coarse Aggregate Moisture Corrective Action - Whenever the moisture content of any size of coarse aggregate changes by 0.5 percent or more, the scale setting for the coarse aggregate batcher and the water batcher shall be adjusted if necessary to maintain the specified slump.

3.6.2.3 Scales

a. Weighing Accuracy - The accuracy of the scales shall be checked by test weights prior to start of concrete operations and at least once every 3 months for conformance with the applicable requirements of paragraph BATCHING EQUIPMENT. Such tests shall also be made as directed whenever there are variations in properties of the fresh concrete that could result from batching errors.

b. Batching and Recording Accuracy - Once a week the accuracy of each batching and recording device shall be checked during a weighing operation by noting and recording the required weight, recorded weight, and the actual weight batched. The Contractor shall confirm that the calibration devices described in paragraph BATCH PLANT for checking the accuracy of dispensed admixtures are operating properly.

c. Scales Corrective Action - When either the weighing accuracy or batching accuracy does not comply with specification requirements, the plant shall not be operated until necessary adjustments or repairs have been made. Discrepancies in recording accuracies shall be corrected immediately.

3.6.2.4 Batch-Plant Control

The measurement of all constituent materials including cementitious materials, each size of aggregate, water, and admixtures shall be continuously controlled. The aggregate weights and amount of added water shall be adjusted as necessary to compensate for free moisture in the aggregates. The amount of air-entraining agent shall be adjusted to control air content within specified limits. A report shall be prepared indicating type and source of cement used, type and source of pozzolan,

amount and source of admixtures used, aggregate source, the required aggregate and water weights per cubic yard, amount of water as free moisture in each size of aggregate, and the batch aggregate and water weights per cubic yard for each class of concrete batched during plant operation.

3.6.2.5 Concrete Mixture

a. Air Content Testing - Air content tests shall be made when test specimens are fabricated. In addition, at least two tests for air content shall be made on randomly selected batches of each separate concrete mixture produced during each 8-hour period of concrete production. Additional tests shall be made when excessive variation in workability is reported by the placing foreman or Government quality assurance representative. Tests shall be made in accordance with ASTM C 231. Samples for air content may be taken at the mixer, however, the Contractor is responsible for delivering the concrete to the placement site at the stipulated air content. If the Contractor's materials or transportation methods cause air content loss between the mixer and the placement, correlation samples shall be taken at the placement site as required by the Contracting Officer and the air content at the mixer controlled as directed.

b. Air Content Corrective Action - Whenever air content approaches either upper or lower limit, an adjustment shall immediately be made in the amount of air-entraining admixture batched. As soon as is practical after each adjustment, another test shall be made to verify the result of the adjustment, the admixture dispenser shall be recalibrated to ensure that it is operating accurately and with good reproducibility. Whenever the air content reaches either upper or lower limit, the air content shall be considered out of control and the concreting operation shall immediately be halted until the air content is under control. Additional air content tests shall be made when concreting is restarted. All this shall be at no extra cost to the Government.

c. Slump Testing - In addition to slump tests which shall be made when test specimens are fabricated, at least four slump tests shall be made on randomly selected batches in accordance with ASTM C 143/C 143M for each separate concrete mixture produced during each 8-hour or less period of concrete production each day. Also, additional tests shall be made when excessive variation in workability is reported by the placing foreman or Government's quality assurance representative. When a single slump test reaches or goes beyond either the upper or lower limit, a second test shall immediately be made on the same batch of concrete. The results of the two tests shall be averaged and this average used as the slump of the batch for determining the need for any remedial action. Samples for slump shall be taken at the mixer, however, the Contractor is responsible for delivering the concrete to the placement site at the stipulated slump. If the Contractor's materials or transportation methods cause slump loss between mixer and the placement, correlation samples shall be taken at the placement site as required by the Contracting Officer and the slump at the mixer controlled as directed.

d. Slump Corrective Action - Whenever slump approaches the upper limit, an adjustment shall be immediately made in the batch weights of water and fine aggregate. The adjustments are to be made so that the total water content does not exceed that amount allowed by the maximum

W/C specified, based upon aggregates which are in a saturated surface-dry condition. When a single slump reaches the upper or lower limit, no further concrete shall be delivered to the placing site until proper adjustments have been made. Immediately after each adjustment, another test shall be made to verify the correctness of the adjustment. Whenever two consecutive slump tests, made during a period when there was no adjustment of batch weights, reach the upper limit, the concreting operation shall immediately be halted and the Contractor shall take appropriate steps to bring the slump under control. Also, additional slump tests shall be made as directed. All this shall be at no additional cost to the Government.

e. Temperature - The temperature of the concrete shall be measured when compressive strength specimens are fabricated. Measurement shall be in accordance with ASTM C 1064/C 1064M. The temperature shall be reported along with the compressive strength data.

f. Compressive-Strength Specimens - At least one set of test specimens shall be made each day on each different concrete mixture placed during the day. Additional sets of test cylinders shall be made, as directed by the Contracting Officer, when the mixture proportions are changed or when low strengths have been detected. A random sampling plan shall be developed by the Contractor and approved by the Contracting Officer prior to the start of construction. The plan shall assure that sampling is done in a completely random and unbiased manner. A set of test specimens for concrete with a 28-day specified strength per paragraph DESIGN REQUIREMENTS shall consist of four cylinders, two to be tested at 7 days and two at 28 days. A set of test specimens for concrete with a 90-day strength per specified paragraph DESIGN REQUIREMENTS shall consist of six cylinders, two tested at 7 days, two at 28 days, and two at 90 days. Test specimens shall be molded and cured in accordance with ASTM C 31/C 31M and tested in accordance with ASTM C 39/C 39M. All compressive-strength tests shall be reported immediately to the Contracting Officer. Quality control charts shall be kept for individual strength tests, moving average for strength, and moving average for range for each mixture. The charts shall be similar to those found in ACI 214.

3.6.2.6 Inspection Before Placing

Foundation or construction joints, forms, and embedded items shall be inspected for quality by the Contractor in sufficient time prior to each concrete placement to certify to the Contracting Officer that they are ready to receive concrete. The results of each inspection shall be reported in writing.

3.6.2.7 Placing

a. Placing Inspection - The placing foreman shall supervise all placing operations, shall determine that the correct quality of concrete or grout is placed in each location as directed and shall be responsible for measuring and recording concrete temperatures and ambient temperature hourly during placing operations, weather conditions, time of placement, yardage placed, and method of placement.

b. Placing Corrective Action - The placing foreman shall not permit batching and placing to begin until he has verified that an adequate number of vibrators in working order and with competent operators are available. Placing shall not be continued if any pile of concrete is

inadequately consolidated. If any batch of concrete fails to meet the temperature requirements, immediate steps shall be taken to improve temperature controls.

3.6.2.8 Vibrators

a. Vibrator Testing and Use - The frequency and amplitude of each vibrator shall be determined in accordance with COE CRD-C 521prior to initial use and at least once a month when concrete is being placed. Additional tests shall be made as directed when a vibrator does not appear to be adequately consolidating the concrete. The frequency shall be determined at the same time the vibrator is operating in concrete with the tachometer held against the upper end of the vibrator head while almost submerged and just before the vibrator is withdrawn from the concrete. The amplitude shall be determined with the head vibrating in air. Two measurements shall be taken, one near the tip and another near the upper end of the vibrator head and these results averaged. The make, model, type, and size of the vibrator and frequency and amplitude results shall be reported in writing.

b. Vibrator Corrective Action - Any vibrator not meeting the requirements of paragraph VIBRATORS shall be immediately removed from service and repaired or replaced.

3.6.2.9 Curing

a. Moist-Curing Inspections - At least once each shift, and once per day on nonwork days an inspection shall be made of all areas subject to moist curing. The surface moisture condition shall be noted and recorded.

b. Moist-Curing Corrective Action - When a daily inspection report lists an area of inadequate curing, immediate corrective action shall be taken, and the required curing period for such areas shall be extended by one (1) day.

c. Membrane-Curing Inspection - No curing compound shall be applied until the Contractor's authorized representative has verified that the compound is properly mixed and ready for spraying. At the end of each operation, he shall estimate the quantity of compound used by measurement of the container and the area of concrete surface covered and compute the rate of coverage in square feet per gallon. He shall note whether or not coverage is uniform.

d. Membrane-Curing Corrective Action - When the coverage rate of the curing compound is less than that specified or when the coverage is not uniform, the entire surface shall be sprayed again.

3.6.2.10 Cold-Weather Protection and Sealed Insulation Curing

At least once each shift and once per day on nonwork days, an inspection shall be made of all areas subject to cold-weather protection. The protection system shall be inspected for holes, tears, unsealed joints, or other deficiencies that could result in damage to the concrete. Special attention shall be taken at edges, corners, and thin sections. Any deficiencies shall be noted, corrected, and reported.

3.6.2.11 Cold-Weather Protection Corrective Action

When a daily inspection report lists any holes, tears, unsealed joints, or other deficiencies, the deficiency shall be corrected immediately and the period of protection extended 1 day.

3.6.2.12 Mixer Uniformity

a. Stationary Mixers - Prior to the start of concrete placing and once every 6 months when concrete is being placed, or once for every 75,000 cubic yards of concrete placed, whichever results in the longest time interval, uniformity of concrete mixing shall be determined in accordance with ASTM C 94/C 94M.

3.6.2.13 Mixer Uniformity Corrective Action

When a mixer fails to meet mixer uniformity requirements, either the mixer shall be removed from service on the work, the mixing time shall be increased, batching sequence changed, batch size reduced, or adjustments shall be made to the mixer until compliance is achieved.

3.6.3 Reports

All results of tests or inspections conducted shall be reported informally as they are completed and in writing daily. A weekly report shall be prepared for the updating of control charts covering the entire period from the start of the construction season through the current week. During periods of cold-weather protection, reports of pertinent temperatures shall be made daily. These requirements do not relieve the Contractor of the obligation to report certain failures immediately as required in preceding paragraphs. Such reports of failures and the action taken shall be confirmed in writing in the routine reports. The Contracting Officer has the right to examine all test and inspection records.

3.7 INSTALLATION OF ANCHOR BARS INTO DRILLED HOLES IN CONCRETE

3.7.1 General

Holes for the anchor bars shall be drilled in the concrete to the diameters and depths shown on the drawings. Drilling shall be by approved rotary drilling equipment. After drilling, the holes shall be thoroughly cleaned and then airblown with dry compressed air at a pressure not less than 90 psi to remove loose material and moisture. The holes shall be protected from water and other foreign materials until epoxy is placed.

3.7.2 Mixing

Mixing of the two components of the epoxy-resin shall be in accordance with the manufacturer's instructions. The container for mixing shall be cleaned after each use or disposed of after one use. Material which has not been used within 30 minutes after mixing shall be discarded.

3.7.3 Anchor Bar Preparation

All oil, grease, or loose material shall be thoroughly removed from the surface of the anchor bar before it is placed in the epoxy.

3.7.4 Application and Installation

The holes for anchor bars shall be inspected and shall be clean and dry before installation of anchor bars. If any moisture is present, the hole

shall be blown out with dry compressed air before the epoxy is injected into the hole. The epoxy and anchor bars shall be installed according to the epoxy manufacturer's recommended procedures. Anchor bars shall be installed at right angles to the concrete surface, and rigidly held in place to ensure that no movement occurs until the epoxy has a firm set. The epoxy shall be protected from water for a minimum of 24 hours. After the epoxy has set 24 hours, any bar not firmly bonded will be considered unsatisfactory. Any unsatisfactory anchor bar shall be removed and the hole reamed to fresh concrete followed by installation with fresh epoxy resin.

3.7.5 Safety Precautions

Some formulations of epoxy-resin are toxic, harmful to skin, eyes, and mucous membranes. The contractor shall provide rubber gloves and face shields or goggles for persons mixing or placing epoxy-resin. A means for washing eyes with water spray shall be available at the jobsite. No smoking or open flame shall be permitted within 50 feet of where solvents are being used for cleanup, and a portable fire extinguisher shall be available at the site. -- End of Section --

SECTION TABLE OF CONTENTS

DIVISION 13 - SPECIAL CONSTRUCTION

SECTION 13280

ASBESTOS ABATEMENT

10/99

PART 1 GENERAL

1.1 REFERENCES
1.2 DEFINITIONS
1.3 DESCRIPTION OF WORK
1.3.1 Abatement Work Tasks
1.3.2 Unexpected Discovery of Asbestos
1.4 SUBMITTALS
1.5 QUALIFICATIONS
1.5.1 Written Qualifications and Organization Report
1.5.2 Specific Requirements
1.6 REGULATORY REQUIREMENTS
1.7 SAFETY AND HEALTH PROGRAM AND PLANS
1.7.1 Asbestos Hazard Abatement Plan Appendix
1.7.2 Activity Hazard Analyses Appendix
1.8 PRECONSTRUCTION CONFERENCE AND ONSITE SAFETY
1.9 SECURITY
1.10 MEDICAL REQUIREMENTS
1.10.1 Medical Examinations
1.10.1.1 Information Provided to the Physician
1.10.1.2 Written Medical Opinion
1.10.2 Medical and Exposure Records
1.11 TRAINING PROGRAM
1.11.1 General Training Requirements
1.11.2 Project Specific Training
1.12 RESPIRATORY PROTECTION PROGRAM
1.12.1 Respiratory Fit Testing
1.12.2 Respirator Selection and Use Requirements
1.12.3 Class I Work
1.12.4 Class II and III Work
1.12.5 Sanitation
1.13 HAZARD COMMUNICATION PROGRAM
1.14 LICENSES, PERMITS AND NOTIFICATIONS
1.14.1 General Legal Requirements
1.14.2 Litigation and Notification
1.15 PERSONAL PROTECTIVE EQUIPMENT
1.15.1 Respirators
1.15.2 Whole Body Protection
1.15.2.1 Coveralls
1.15.2.2 Work Clothing
1.15.2.3 Gloves
1.15.2.4 Foot Coverings
1.15.2.5 Head Covering
1.15.2.6 Protective Eye Wear
1.16 HYGIENE FACILITIES AND PRACTICES
1.16.1 Shower Facilities

1.16.2 3-Stage Decontamination Area
1.16.3 Single Stage Decontamination Area
1.16.4 Decontamination Area Entry Procedures
1.16.5 Decontamination Area Exit Procedures
1.16.6 Lunch Areas
1.16.7 Smoking
1.17 REGULATED AREAS
1.18 WARNING SIGNS AND TAPE
1.19 WARNING LABELS
1.20 LOCAL EXHAUST VENTILATION
1.21 TOOLS
1.22 RENTAL EQUIPMENT
1.23 AIR MONITORING EQUIPMENT
1.24 EXPENDABLE SUPPLIES
1.24.1 Glovebag
1.24.2 Duct Tape
1.24.3 Disposal Containers
1.24.4 Disposal Bags
1.24.5 Sheet Plastic
1.24.6 Amended Water
1.24.7 Mastic Removing Solvent
1.24.8 Leak-tight Wrapping
1.25 MISCELLANEOUS ITEMS

PART 2 PRODUCTS

2.1 ENCAPSULANTS

PART 3 EXECUTION

3.1 GENERAL REQUIREMENTS
3.2 PROTECTION OF ADJACENT WORK OR AREAS TO REMAIN
3.3 OBJECTS
3.3.1 Removal of Mobile Objects
3.4 BUILDING VENTILATION SYSTEM AND CRITICAL BARRIERS
3.5 PRECLEANING
3.6 METHODS OF COMPLIANCE
3.6.1 Mandated Practices
3.6.2 Control Methods
3.6.3 Unacceptable Practices
3.6.4 Class I Work Procedures
3.6.5 Specific Control Methods for Class I Work
3.6.5.1 Glovebag Systems
3.6.5.2 Mini-Enclosures
3.6.5.3 Wrap and Cut Operation
3.6.6 Class II Work
3.6.7 Specific Control Methods for Class II Work
3.6.7.1 Vinyl and Asphalt Flooring Materials
3.6.7.2 Roofing Material
3.6.7.3 Cementitious Siding and Shingles or Transite Panels
3.6.7.4 Gaskets
3.6.7.5 Other Class II Jobs
3.6.8 Alternative Methods for Roofing Materials and Asphaltic Wrap
3.6.9 Cleaning After Asbestos Removal
3.6.10 Class I Asbestos Work Response Action Detail Sheets
3.6.11 Class II Asbestos Work Response Action Detail Sheets
3.7 FINAL CLEANING AND VISUAL INSPECTION
3.8 EXPOSURE ASSESSMENT AND AIR MONITORING
3.8.1 General Requirements For Exposure

3.8.2 Initial Exposure Assessment
3.8.3 Negative Exposure Assessment
3.8.4 Preabatement Environmental Air Monitoring
3.8.5 Environmental Air Monitoring During Abatement
3.8.6 Final Clearance Air Monitoring
3.8.6.1 Final Clearance Requirements, NIOSH PCM Method
3.8.6.2 Air Clearance Failure
3.8.7 Air-Monitoring Results and Documentation
3.9 CLEARANCE CERTIFICATION
3.10 CLEANUP AND DISPOSAL
3.10.1 Title to ACM Materials
3.10.2 Collection and Disposal of Asbestos
3.10.3 Weigh Bill and Delivery Tickets
3.10.4 Asbestos Waste Shipment Record

-- End of Section Table of Contents --

SECTION 13280

ASBESTOS ABATEMENT
10/99

PART 1 GENERAL

Attachments: Set-Up Detail and Response Action Detail Sheets: 1, 4, 7, 9A, 9B, 10, 11, 12, 13, 14, 15, 18, 19, 20, 22, 23, 57, 58, 59, 61, 62, 64, 63, 74, 75, 81, 87 and 89

1.1 REFERENCES

The publications listed below form a part of this specification to the extent referenced. The publications are referred to in the text by basic designation only.

AMERICAN NATIONAL STANDARDS INSTITUTE (ANSI)

ANSI Z9.2	(1979; R 1991) Fundamentals Governing the Design and Operation of Local Exhaust Systems
ANSI Z87.1	(1989; Errata; Z87.1a) Occupational and Educational Eye and Face Protection
ANSI Z88.2	(1992) Respiratory Protection

AMERICAN SOCIETY FOR TESTING AND MATERIALS (ASTM)

ASTM C 732	(1995) Aging Effects of Artificial Weathering on Latex Sealants
ASTM D 1331	(1989; R 1995) Surface and Interfacial Tension of Solutions of Surface-Active Agents
ASTM D 4397	(1996) Polyethylene Sheeting for Construction, Industrial, and Agricultural Applications
ASTM E 84	(1998e1) Surface Burning Characteristics of Building Materials
ASTM E 96	(1995) Water Vapor Transmission of Materials
ASTM E 119	(1998) Fire Tests of Building Construction and Materials
ASTM E 736	(1992) Cohesion/Adhesion of Sprayed Fire-Resistive Materials Applied to Structural Members
ASTM E 1368	(1997) Visual Inspection of Asbestos Abatement Projects

CODE OF FEDERAL REGULATIONS (CFR)

29 CFR 1910	Occupational Safety and Health Standards
29 CFR 1926	Safety and Health Regulations for Construction
40 CFR 61	National Emissions Standards for Hazardous Air Pollutants
40 CFR 763	Asbestos
42 CFR 84	Approval of Respiratory Protective Devices
49 CFR 107	Hazardous Materials Program Procedures
49 CFR 171	General Information, Regulations and Definitions
49 CFR 172	Hazardous Materials Table, Special Provisions, Hazardous Materials Communications, Emergency Response Information, and Training Requirements
49 CFR 173	Shippers - General Requirements for Shipments and Packagings

COMPRESSED GAS ASSOCIATION (CGA)

CGA G-7	(1990) Compressed Air for Human Respiration
CGA G-7.1	(1997) Commodity Specification for Air

ENGINEERING MANUALS (EM)

EM 385-1-1	(1996) Safety and Health Requirements Manual

ENVIRONMENTAL PROTECTION AGENCY (EPA)

EPA 340/1-90-018	(1990) Asbestos/NESHAP Regulated Asbestos Containing Materials Guidance
EPA 340/1-90-019	(1990) Asbestos/NESHAP Adequately Wet Guidance
EPA 560/5-85-024	(1985) Guidance for Controlling Asbestos-Containing Materials in Buildings

NATIONAL INSTITUTE FOR OCCUPATIONAL SAFETY AND HEALTH (NIOSH)

NIOSH Pub No. 84-100	(1984; Supple 1985, 1987, 1988 & 1990) NIOSH Manual of Analytical Methods

UNDERWRITERS LABORATORIES (UL)

UL 586	(1996) High-Efficiency, Particulate, Air Filter Units

STATE REGULATIONS

567-33 (455B)	Iowa, Environmental Protection, Title II - Air Quality Chapter 23 - Emission Standards for Contaminants
875-81 (88B)	Iowa, Labor Services Division 875,Chapter 81 - Asbestos Control Procedures
875-82 (88B)	Iowa, Labor Services Division 875, Chapter 82 - Licensing of Business Entities, Licensing of Training Courses

1.2 DEFINITIONS

a. Adequately Wet: A term defined in 40 CFR 61, Subpart M, and EPA 340/1-90-019 meaning to sufficiently mix or penetrate with liquid to prevent the release of particulate. If visible emissions are observed coming from asbestos-containing material (ACM), then that material has not been adequately wetted. However, the absence of visible emissions is not sufficient evidence of being adequately wetted.

b. Aggressive Method: Removal or disturbance of building material by sanding, abrading, grinding, or other method that breaks, crumbles, or disintegrates intact asbestos-containing material (ACM).

c. Amended Water: Water containing a wetting agent or surfactant with a surface tension of at least 29 dynes per square centimeter when tested in accordance with ASTM D 1331.

d. Asbestos: Asbestos includes chrysotile, amosite, crocidolite, tremolite asbestos, anthophylite asbestos, actinolite asbestos, and any of these minerals that have been chemically treated and/or altered.

e. Asbestos-Containing Material (ACM): Any materials containing more than one percent asbestos.

f. Asbestos Fiber: A particulate form of asbestos, 5 micrometers or longer, with a length-to-width ratio of at least 3 to 1.

g. Authorized Person: Any person authorized by the Contractor and required by work duties to be present in the regulated areas.

h. Building Inspector: Individual who inspects buildings for asbestos and has EPA Model Accreditation Plan (MAP) "Building Inspector" training; accreditation required by 40 CFR 763, Subpart E, Appendix C.

i. Certified Industrial Hygienist (CIH): An Industrial Hygienist certified in the practice of industrial hygiene by the American Board of Industrial Hygiene.

j. Class I Asbestos Work: Activities defined by OSHA involving the removal of thermal system insulation (TSI) and surfacing ACM.

k. Class II Asbestos Work: Activities defined by OSHA involving the removal of ACM which is not thermal system insulation or surfacing material. This includes, but is not limited to, the removal of asbestos - containing wallboard, floor tile and sheeting, roofing and siding shingles, and construction mastic. Certain "incidental" roofing materials such as mastic, flashing and cements when they are still intact are excluded from Class II asbestos work. Removal of small amounts of these materials which would fit into a glovebag may be classified as a Class III job.

l. Class III Asbestos Work: Activities defined by OSHA that involve repair and maintenance operations, where ACM, including TSI and surfacing ACM, is likely to be disturbed. Operations may include drilling, abrading, cutting a hole, cable pulling, crawling through tunnels or attics and spaces above the ceiling, where asbestos is actively disturbed or asbestos-containing debris is actively disturbed.

m. Class IV Asbestos Work: Maintenance and custodial construction activities during which employees contact but do not disturb ACM and activities to clean-up dust, waste and debris resulting from Class I, II, and III activities. This may include dusting surfaces where ACM waste and debris and accompanying dust exists and cleaning up loose ACM debris from TSI or surfacing ACM following construction.

n. Clean room: An uncontaminated room having facilities for the storage of employees' street clothing and uncontaminated materials and equipment.

o. Competent Person: In addition to the definition in 29 CFR 1926, Section .32(f), a person who is capable of identifying existing asbestos hazards as defined in 29 CFR 1926, Section .1101, selecting the appropriate control strategy, has the authority to take prompt corrective measures to eliminate them and has EPA Model Accreditation Plan (MAP) "Contractor/Supervisor" training; accreditation required by 40 CFR 763, Subpart E, Appendix C.

p. Contractor/Supervisor: Individual who supervises asbestos abatement work and has EPA Model Accreditation Plan "Contractor/Supervisor" training; accreditation required by 40 CFR 763, Subpart E, Appendix C.

q. Critical Barrier: One or more layers of plastic sealed over all openings into a regulated area or any other similarly placed physical barrier sufficient to prevent airborne asbestos in a regulated area from migrating to an adjacent area.

r. Decontamination Area: An enclosed area adjacent and connected to the regulated area and consisting of an equipment room, shower area, and clean room, which is used for the decontamination of workers, materials, and equipment that are contaminated with asbestos.

s. Demolition: The wrecking or taking out of any load-supporting structural member and any related razing, removing, or stripping of asbestos products.

t. Disposal Bag: A 6 mil thick, leak-tight plastic bag, pre-labeled

in accordance with 29 CFR 1926, Section .1101, used for transporting asbestos waste from containment to disposal site.

u. Disturbance: Activities that disrupt the matrix of ACM, crumble or pulverize ACM, or generate visible debris from ACM. Disturbance includes cutting away small amounts of ACM, no greater than the amount which can be contained in 1 standard sized glovebag or waste bag, not larger than 60 inches in length and width in order to access a building component.

v. Equipment Room or Area: An area adjacent to the regulated area used for the decontamination of employees and their equipment.

w. Employee Exposure: That exposure to airborne asbestos that would occur if the employee were not using respiratory protective equipment.

x. Fiber: A fibrous particulate, 5 micrometers or longer, with a length to width ratio of at least 3 to 1.

y. Friable ACM: A term defined in 40 CFR 61, Subpart M and EPA 340/1-90-018 meaning any material which contains more than 1 percent asbestos, as determined using the method specified in 40 CFR 763, Subpart E, Appendix A, Section 1, Polarized Light Microscopy (PLM), that when dry, can be crumbled, pulverized, or reduced to powder by hand pressure. If the asbestos content is less than 10 percent, as determined by a method other than point counting by PLM, the asbestos content is verified by point counting using PLM.

z. Glovebag: Not more than a 60 by 60 inch impervious plastic bag-like enclosure affixed around an asbestos-containing material, with glove-like appendages through which material and tools may be handled.

aa. High-Efficiency Particulate Air (HEPA) Filter: A filter capable of trapping and retaining at least 99.97 percent of all mono-dispersed particles of 0.3 micrometers in diameter.

bb. Homogeneous Area: An area of surfacing material or thermal system insulation that is uniform in color and texture.

cc. Industrial Hygienist: A professional qualified by education, training, and experience to anticipate, recognize, evaluate, and develop controls for occupational health hazards.

dd. Intact: ACM which has not crumbled, been pulverized, or otherwise deteriorated so that the asbestos is no longer likely to be bound with its matrix. Removal of "intact" asphaltic, resinous, cementitious products does not render the ACM non-intact simply by being separated into smaller pieces.

ee. Model Accreditation Plan (MAP): USEPA training accreditation requirements for persons who work with asbestos as specified in 40 CFR 763, Subpart E, Appendix C.

ff. Modification: A changed or altered procedure, material or component of a control system, which replaces a procedure, material or component of a required system.

gg. Negative Exposure Assessment: A demonstration by the Contractor to show that employee exposure during an operation is expected to be consistently below the OSHA Permissible Exposure Limits (PELs).

hh. NESHAP: National Emission Standards for Hazardous Air Pollutants. The USEPA NESHAP regulation for asbestos is at 40 CFR 61, Subpart M.

ii. Nonfriable ACM: A NESHAP term defined in 40 CFR 61, Subpart M and EPA 340/1-90-018 meaning any material containing more than 1 percent asbestos, as determined using the method specified in 40 CFR 763, Subpart E, Appendix A, Section 1, Polarized Light Microscopy, that, when dry, cannot be crumbled, pulverized or reduced to powder by hand pressure.

jj. Nonfriable ACM (Category I): A NESHAP term defined in 40 CFR 61, Subpart E and EPA 340/1-90-018 meaning asbestos-containing packings, gaskets, resilient floor covering, and asphalt roofing products containing more than 1 percent asbestos as determined using the method specified in 40 CFR 763, Subpart F, Appendix A, Section 1, Polarized Light Microscopy.

kk. Nonfriable ACM (Category II): A NESHAP term defined in 40 CFR 61, Subpart E and EPA 340/1-90-018 meaning any material, excluding Category I nonfriable ACM, containing more than 1 percent asbestos, as determined using the methods specified in 40 CFR 763, Subpart F, Appendix A, Section 1, Polarized Light Microscopy, that when dry, cannot be crumbled, pulverized, or reduced to powder by hand pressure.

ll. Permissible Exposure Limits (PELs):

(1) PEL-Time weighted average(TWA): Concentration of asbestos not in excess of 0.1 fibers per cubic centimeter of air (f/cc) as an 8 hour time weighted average (TWA), as determined by the method prescribed in 29 CFR 1926, Section .1101, Appendix A, or the current version of NIOSH Pub No. 84-100 analytical method 7400.

(2) PEL-Excursion Limit: An airborne concentration of asbestos not in excess of 1.0 f/cc of air as averaged over a sampling period of 30 minutes as determined by the method prescribed in 29 CFR 1926, Section .1101, Appendix A, or the current version of NIOSH Pub No. 84-100 analytical method 7400.

mm. Regulated Area: An OSHA term defined in 29 CFR 1926, Section .1101 meaning an area established by the Contractor to demarcate areas where Class I, II, and III asbestos work is conducted; also any adjoining area where debris and waste from such asbestos work accumulate; and an area within which airborne concentrations of asbestos exceed, or there is a reasonable possibility they may exceed, the permissible exposure limit.

nn. Removal: All operations where ACM is taken out or stripped from structures or substrates, and includes demolition operations.

oo. Repair: Overhauling, rebuilding, reconstructing, or reconditioning of structures or substrates, including encapsulation or other repair of ACM attached to structures or

substrates. If the amount of asbestos so "disturbed" cannot be contained in 1 standard glovebag or waste bag, Class I precautions are required.

pp. Spills/Emergency Cleanups: Cleanup of sizable amounts of asbestos waste and debris which has occurred, for example, when water damage occurs in a building, and sizable amounts of ACM are dislodged. A Competent Person evaluates the site and ACM to be handled, and based on the type, condition and extent of the dislodged material, classifies the cleanup as Class I, II, or III. Only if the material was intact and the cleanup involves mere contact of ACM, rather than disturbance, could there be a Class IV classification.

qq. Surfacing ACM: Asbestos-containing material which contains more than 1% asbestos and is sprayed-on, troweled-on, or otherwise applied to surfaces, such as acoustical plaster on ceilings and fireproofing materials on structural members, or other materials on surfaces for acoustical, fireproofing, or other purposes.

rr. Thermal system insulation (TSI) ACM: ACM which contains more than 1% asbestos and is applied to pipes, fittings, boilers, breeching, tanks, ducts, or other interior structural components to prevent heat loss or gain or water condensation.

ss. Transite: A generic name for asbestos cement wallboard and pipe.

tt. Worker: Individual (not designated as the Competent Person or a supervisor) who performs asbestos work and has completed asbestos worker training required by 29 CFR 1926, Section .1101, to include EPA Model Accreditation Plan (MAP) "Worker" training; accreditation required by 40 CFR 763, Subpart E, Appendix C, if required by the OSHA Class of work to be performed or by the state where the work is to be performed.

1.3 DESCRIPTION OF WORK

The work covered by this section includes the removal of asbestos-containing materials (ACM) which are encountered during demolition activities associated with this project and describes procedures and equipment required to protect workers and occupants of the regulated area from contact with airborne asbestos fibers and ACM dust and debris. Activities include OSHA Class I Class II work operations involving ACM. The work also includes containment, storage, transportation and disposal of the generated ACM wastes. More specific operational procedures shall be detailed in the required Accident Prevention Plan and its subcomponents, the Asbestos Hazard Abatement Plan and Activity Hazard Analyses required in paragraph SAFETY AND HEALTH PROGRAM AND PLANS.

1.3.1 Abatement Work Tasks

The addresses of buildings where specific ACM is to be abated are identified on the drawings and includes the buildings at 1112 McDonald Street, 415 W 19th Street, 419 W 20th Street, 421 W 23rd Street and 3020 Center Street. The approximate quantity and location of the ACM is described below. A summary of work task data elements for each individual ACM abatement work task to include the appropriate RESPONSE ACTION DETAIL SHEET (item to be abated and methods to be used) and SET-UP DETAIL SHEETS (containment techniques to include safety precautions and methods) are

appended to this specification section.

1.3.1.1 1112 McDonald St (house) has approximate 50 sq ft of asbestos vinyl floor tile as a sublayer in the first floor bathroom.

1.3.1.2 415 W 19th St (maintenance building) has approximately 300 sq ft of asbestos containing transite wall tiles located primarly between the buildings two roof-lines.

1.3.1.3 419 W 20th St (house) has approximately 5 sq ft of joint wrap and 10 sq ft of duct wrap on the heat system in the basement.

1.3.1.4 421 W 23rd St (house) has approximately 180 sq ft of asbestos containing vinyl floor tile (and the same amount of fiber backing) in the kitchen.

1.3.1.5 3020 Center St (house) has approximately 120 sq ft of asbestos containing vinyl floor tile (and the same amount of fiber backing) in the kitchen as well as approximaetly 2,220 sq ft of asbestos containing transite wall tiles.

1.3.2 Unexpected Discovery of Asbestos

For any previously untested building components suspected to contain asbestos and located in areas impacted by the work, the Contractor shall notify the Contracting Officer (CO) who will have the option of ordering up to six (6) bulk samples to be obtained at the Contractor's expense and delivered to a laboratory accredited under the National Institute of Standards and Technology (NIST) "National Voluntary Laboratory Accreditation Program (NVLAP)" and analyzed by PLM at no additional cost to the Government. Any additional components identified as ACM that have been approved by the Contracting Officer for removal shall be removed by the Contractor and will be paid for by an equitable adjustment to the contract price under the CONTRACT CLAUSE titled "changes". Sampling activities undertaken to determine the presence of additional ACM shall be conducted by personnel who have successfully completed the EPA Model Accreditation Plan (MAP) "Building Inspector" training course required by 40 CFR 763, Subpart E, Appendix C.

1.4 SUBMITTALS

Government approval is required for submittals with a "G" designation; submittals not having a "G" designation are for information only. When used, a designation following the "G" designation identifies the office that will review the submittal for the Government. The following shall be submitted in accordance with Section 01330 SUBMITTAL PROCEDURES:

SD-03 Product Data

Respiratory Protection Program; G, ED-GI

Records of the respirator program.

Cleanup and Disposal; G-ED-GI

Waste shipment records. Weigh bills and delivery tickets shall be furnished for information only.

Detailed Drawings; G-ED-GI

Descriptions, detail project drawings, and site layout to include worksite containment area techniques as prescribed on applicable SET-UP DETAIL SHEETS, local exhaust ventilation system locations, decontamination units and load-out units, other temporary waste storage facility, access tunnels, location of temporary utilities (electrical, water, sewer) and boundaries of each regulated area.

Materials and Equipment;

Manufacturer's catalog data for all materials and equipment to be used in the work, including brand name, model, capacity, performance characteristics and any other pertinent information. Test results and certificates from the manufacturer of encapsulants substantiating compliance with performance requirements of this specification. Material Safety Data Sheets for all chemicals to be used onsite in the same format as implemented in the Contractor's HAZARD COMMUNICATION PROGRAM. Data shall include, but shall not be limited to, the following items:

a. High Efficiency Filtered Air (HEPA) local exhaust equipment

b. Vacuum cleaning equipment

c. Air monitoring equipment

d. Respirators

e. Personal protective clothing and equipment

f. Duct Tape

g. Disposal Containers

h. Sheet Plastic

k. Wetting Agent

l. Prefabricated Decontamination Unit

m. Other items

n. Material Safety Data Sheets (for all chemicals proposed)

Accident Prevention Plan;G-ED-GI

The site-specific written plan to be implemented by the Contractor, including the Asbestos Hazard Abatement Plan

Qualifications; G-ED-GI

A written report providing evidence of qualifications for personnel, facilities and equipment assigned to the work.

Training Program; FIO,

A copy of the written project site-specific training material as

indicated in 29 CFR 1926, Section.1101 that will be used to train onsite employees. The training document shall be signed by the Contractor's Designated IH and Competent Person.

Medical Requirements; FIO;

Physician's written opinion.

Encapsulants; FIO,

Certificates stating that encapsulants meet the applicable specified performance requirements.

SD-06 Test Reports

Exposure Assessment and Air Monitoring; G-ED-GI

Initial exposure assessments, negative exposure assessments, air-monitoring results and documentation.

Licenses, Permits and Notifications; G-ED-GI

Licenses, permits, and notifications.

SD-07 Certificates

Vacuum, Filtrationand Ventilation Equipment; FIO
Manufacturer's certifications showing compliance with ANSI Z9.2 for:

a. Vacuums.

b. Water filtration equipment.

c. Ventilation equipment.

d. Other equipment required to contain airborne asbestos fibers.

1.5 QUALIFICATIONS

1.5.1 Written Qualifications and Organization Report

The Contractor shall furnish a written qualifications and organization report providing evidence of qualifications of the Contractor, Contractor's Project Supervisor, Designated Competent Person, supervisors and workers; Designated IH (person assigned to project and firm name); independent testing laboratory ; all subcontractors to be used including disposal transportation and disposal facility firms, ; and any others assigned to perform asbestos abatement and support activities. The report shall include an organization chart showing the Contractor's staff organization for this project by name and title, chain of command and reporting relationship with all subcontractors. The report shall be signed by the Contractor, the Contractor's onsite project manager, Designated Competent Person, Designated IH, designated testing laboratory and the principals of all subcontractors to be used. The Contractor shall include the following statement in the report: "By signing this report I certify that the personnel I am responsible for during the course of this project fully understand the contents of 29 CFR 1926, Section .1101, 40 CFR 61, Subpart M, and the federal, state and local requirements specified in paragraph

SAFETY AND HEALTH PROGRAM AND PLANS for those asbestos abatement activities that they will be involved in."

1.5.2 Specific Requirements

The Contractor shall designate in writing, personnel meeting the following qualifications:

a. Designated Competent Person: The name, address, telephone number, and resume of the Contractor's Designated Competent Person shall be provided. Evidence that the full-time Designated Competent Person is qualified in accordance with 29 CFR 1926, Sections .32 and .1101, has EPA Model Accreditation Plan (MAP) "Contractor/Supervisor" training accreditation required by 40 CFR 763, Subpart E, Appendix C, and is experienced in the administration and supervision of asbestos abatement projects, including exposure assessment and monitoring, work practices, abatement methods, protective measures for personnel, setting up and inspecting asbestos abatement work areas, evaluating the integrity of containment barriers, placement and operation of local exhaust systems, ACM generated waste containment and disposal procedures, decontamination units installation and maintenance requirements, site safety and health requirements, notification of other employees onsite, etc. The duties of the Competent Person shall include the following: controlling entry to and exit from the regulated area; supervising any employee exposure monitoring required by 29 CFR 1926, Section .1101; ensuring that all employees working within a regulated area wear the appropriate personal protective equipment (PPE), are trained in the use of appropriate methods of exposure control, and use the hygiene facilities and decontamination procedures specified; and ensuring that engineering controls in use are in proper operating conditions and are functioning properly. The Designated Competent Person shall be responsible for compliance with applicable federal, state and local requirements, the Contractor's Accident Prevention Plan and Asbestos Hazard Abatement Plan. The Designated Competent Person shall provide, and the Contractor shall submit, the "Contractor/Supervisor" course completion certificate and the most recent certificate for required refresher training with the employee "Certificate of Worker Acknowledgment" required by this paragraph. The Contractor shall submit evidence that this person has a minimum of 2 years of on-the-job asbestos abatement experience relevant to OSHA competent person requirements. The Designated Competent Person shall be onsite at all times during the conduct of this project.

b. Project and Other Supervisors: The Contractor shall provide the name, address, telephone number, and resume of the Project Supervisor and other supervisors who have responsibility to implement the Accident Prevention Plan, including the Asbestos Hazard Abatement Plan and Activity Hazard Analyses, the authority to direct work performed under this contract and verify compliance, and have EPA Model Accreditation Plan (MAP) "Contractor/Supervisor" training accreditation required by 40 CFR 763, Subpart E, Appendix C. The Project Supervisor and other supervisors shall provide, and the Contractor shall submit, the "Contractor/Supervisor" course completion certificate and the most recent certificate for required refresher training with the employee "Certificate of Worker Acknowledgment" required by this

paragraph. The Contractor shall submit evidence that the Project Supervisor has a minimum of 2 years of on-the-job asbestos abatement experience relevant to project supervisor responsibilities and the other supervisors have a minimum of 1 year on-the-job asbestos abatement experience commensurate with the responsibilities they will have on this project.

c. Designated Industrial Hygienist: The Contractor shall provide the name, address, telephone number, resume and other information specified below for the Industrial Hygienist (IH) selected to prepare the Contractor's Asbestos Hazard Abatement Plan, prepare and perform training, direct air monitoring and assist the Contractor's Competent Person in implementing and ensuring that safety and health requirements are complied with during the performance of all required work. The Designated IH shall be a person who is board certified in the practice of industrial hygiene or board eligible (meets all education and experience requirements) as determined and documented by the American Board of Industrial Hygiene (ABIH), has EPA Model Accreditation Plan (MAP) "Contractor/Supervisor" training accreditation required by 40 CFR 763, Subpart E, Appendix C, and has a minimum of 2 years of comprehensive experience in planning and overseeing asbestos abatement activities. The Designated IH shall provide, and the Contractor shall submit, the "Contractor/Supervisor" course completion certificate and the most recent certificate for required refresher training with the employee "Certificate of Worker Acknowledgment" required by this paragraph. The Designated IH shall be completely independent from the Contractor according to federal, state, or local regulations; that is, shall not be a Contractor's employee or be an employee or principal of a firm in a business relationship with the Contractor negating such independent status. A copy of the Designated IH's current valid ABIH certificationor confirmation of eligibility in writing from the ABIH shall be included. The Designated IH shall visit the site initailly and as needed for the duration of asbestos activities and shall be available for emergencies.

d. Asbestos Abatement Workers: Asbestos abatement workers shall meet the requirements contained in 29 CFR 1926, Section .1101, 40 CFR 61, Subpart M, and other applicable federal, state and local requirements. Worker training documentation shall be provided as required on the "Certificate of Workers Acknowledgment" in this paragraph.

e. Worker Training and Certification of Worker Acknowledgment: Training documentation will be required for each employee who will perform OSHA Class I, Class II, Class III, or Class IV asbestos abatement operations. Such documentation shall be submitted on a Contractor generated form titled "Certificate of Workers Acknowledgment", to be completed for each employee in the same format and containing the same information as the example certificate at the end of this section. Training course completion certificates (initial and most recent update refresher) required by the information checked on the form shall be attached.

f. Physician: The Contractor shall provide the name, medical qualifications, address, and telephone numberof the physician who will or has performed the medical examinations and evaluations of the persons who will conduct the asbestos abatement work tasks.

The physician shall be currently licensed by the state where the workers will be or have been examined, have expertise in pneumoconiosis and shall be responsible for the determination of medical surveillance protocols and for review of examination/test results performed in compliance with 29 CFR 1926, Section .1101 and paragraph MEDICAL REQUIREMENTS. The physician shall be familiar with the site's hazards and the scope of this project. The physician is not required to visit the work site

g. First Aid and CPR Trained Persons: The names of at least 2 persons who are currently trained in first aid and CPR by the American Red Cross or other approved agency shall be designated and shall be onsite at all times during site operations. They shall be trained in universal precautions and the use of PPE as described in the Bloodborne Pathogens Standard of 29 CFR 1910, Section .1030 and shall be included in the Contractor's Bloodborne Pathogen Program. These persons may perform other duties but shall be immediately available to render first aid when needed. A copy of each designated person's current valid First Aid and CPR certificate shall be provided.

h. Independent Testing Laboratory: The Contractor shall provide the name, address and telephone number of the independent testing laboratory selected to perform the sample analyses and report the results. The testing laboratory shall be completely independent from the Contractor as recognized by federal, state or local regulations. Written verification of the following criteria, signed by the testing laboratory principal and the Contractor, shall be submitted:

(1) Phase contrast microscopy (PCM): The laboratory is fully equipped and proficient in conducting PCM of airborne samples using the methods specified by 29 CFR 1926, Section .1101, OSHA method ID-160, the most current version of NIOSH Pub No. 84-100 Method 7400 ; the laboratory is currently judged proficient (classified as acceptable) in counting airborne asbestos samples by PCM by successful participation in each of the last 4 rounds in the American Industrial Hygiene Association (AIHA) Proficiency Analytical Testing (PAT) Program. The selected microscopists who will analyze airborne samples by PCM shall be judged proficient in counting samples as current participating analysts in the AIHA PAT Program, and shall have successfully completed the Asbestos Sampling and Analysis course (NIOSH 582 or equivalent)

(2) Polarized light microscopy (PLM): If buld analysis is required, provide evidence that the laboratory is fully equipped and proficient in conducting PLM analyses of suspect ACM bulk samples in accordance with 40 CFR 763, Subpart E, Appendix E; the laboratory is currently accredited by NIST under the NVLAP for bulk asbestos analysis and will use analysts (names shall be provided) with demonstrated proficiency to conduct PLM to include its application to the identification and quantification of asbestos content.

i. Disposal Facility, Transporter: The Contractor shall provide written evidence that the landfill to be used is approved for asbestos disposal by the USEPA, state and local regulatory agencies. Copies of signed agreements between the Contractor (including subcontractors and transporters) and the asbestos waste

disposal facility to accept and dispose of all asbestos containing waste generated during the performance of this contract shall be provided. Qualifications shall be provided for each subcontractor or transporter to be used, indicating previous experience in transport and disposal of asbestos waste to include all required state and local waste hauler requirements for asbestos. The Contractor and transporters shall meet the DOT requirements of 49 CFR 171, 49 CFR 172, and 49 CFR 173 as well as registration requirements of 49 CFR 107 and other applicable state or local requirements. The disposal facility shall meet the requirements of 40 CFR 61, Sections .154 or .155, as required in 40 CFR 61, Section .150(b), and other applicable state or local requirements.

1.6 REGULATORY REQUIREMENTS

In addition to detailed requirements of this specification, work performed under this contract shall comply with EM 385-1-1, applicable federal, state, and local laws, ordinances, criteria, rules and regulations regarding handling, storing, transporting, and disposing of asbestos waste materials. This includes, but is not limited to, OSHA standards, 29 CFR 1926, especially Section .1101, 40 CFR 61, Subpart M and 40 CFR 763. Matters of interpretation of standards shall be submitted to the appropriate administrative agency for resolution before starting work. Where the requirements of this specification, applicable laws, criteria, ordinances, regulations, and referenced documents vary, the most stringent requirements shall apply.

1.7 SAFETY AND HEALTH PROGRAM AND PLANS

The Contractor shall develop and submit a written comprehensive site-specific Accident Prevention Plan at least 30 days prior to the preconstruction conference. The Accident Prevention Plan shall address requirements of EM 385-1-1, Appendix A, covering onsite work to be performed by the Contractor and subcontractors. The Accident Prevention Plan shall incorporate an Asbestos Hazard Abatement Plan, and Activity Hazard Analyses as separate appendices into one (1) site specific Accident Prevention Plan document. Any portions of the Contractor's overall Safety and Health Program that are referenced in the Accident Prevention Plan, e.g., respirator program, hazard communication program, confined space entry program, etc., shall be included as appendices to the Accident Prevention Plan. The plan shall be prepared, signed (and sealed, including certification number if required), and dated by the Contractor's Designated IH, Competent Person, and Project Supervisor.

1.7.1 Asbestos Hazard Abatement Plan Appendix

The Asbestos Hazard Abatement Plan appendix to the Accident Prevention Plan shall include, but not be limited to, the following:

a. The personal protective equipment to be used;

b. The location and description of regulated areas including clean and dirty areas, and decontamination unit (clean room, shower room, equipment room, storage areas such as load-out unit);

c. Initial exposure assessment in accordance with 29 CFR 1926, Section .1101;

d. Level of supervision;

e. Method of notification of other employers at the worksite;

f. Abatement method to include containment and control procedures;

g. Interface of trades involved in the construction;

h. Sequencing of asbestos related work;

i. Storage and disposal procedures and plan;

j. Type of wetting agent to be used;

k. Location of local exhaust equipment;

l. Air monitoring methods (personal, environmental and clearance);

m. Bulk sampling and analytical methods (if required);

n. A detailed description of the method to be employed in order to control the spread of ACM wastes and airborne fiber concentrations;

o. Fire and medical emergency response procedures;

p. The security procedures to be used for all regulated areas.

1.7.2 Activity Hazard Analyses Appendix

Activity Hazard Analyses, for each major phase of work, shall be submitted and updated during the project. The Activity Hazard Analyses format shall be in accordance with EM 385-1-1 (Figure 1-1). The analysis shall define the activities to be performed for a major phase of work, identify the sequence of work, the specific hazards anticipated, and the control measures to be implemented to eliminate or reduce each hazard to an acceptable level. Work shall not proceed on that phase until the Activity Hazard Analyses has been accepted and a preparatory meeting has been conducted by the Contractor to discuss its contents with everyone engaged in the activities, including the onsite Government representatives. The Activity Hazard Analyses shall be continuously reviewed and, when appropriate, modified to address changing site conditions or operations.

1.8 PRECONSTRUCTION CONFERENCE AND ONSITE SAFETY

The Contractor and the Contractor's Designated Competent Person, Project Supervisor, and Designated IH shall meet with the Contracting Officer prior to beginning work at a safety preconstruction conference to discuss the details of the Contractor's submitted Accident Prevention Plan to include the Asbestos Hazard Abatement Plan and Activity Hazard Analyses appendices. Deficiencies in the Accident Prevention Plan will be discussed and the Accident Prevention Plan shall be revised to correct the deficiencies and resubmitted for acceptance. Any changes required in the specification as a result of the Accident Prevention Plan shall be identified specifically in the plan to allow for free discussion and acceptance by the Contracting Officer, prior to the start of work. Onsite work shall not begin until the Accident Prevention Plan has been accepted. A copy of the written Accident Prevention Plan shall be maintained onsite. Changes and modifications to the accepted Accident Prevention Plan shall be made with the knowledge and concurrence of the Designated IH, the Project Supervisor, Designated Competent Person, and the Contracting Officer. Should any unforeseen

hazard become evident during the performance of the work, the Designated IH shall bring such hazard to the attention of the Project Supervisor, Designated IH, and the Contracting Officer, both verbally and in writing, for resolution as soon as possible. In the interim, all necessary action shall be taken by the Contractor to restore and maintain safe working conditions in order to safeguard onsite personnel, visitors, the public, and the environment. Once accepted by the Contracting Officer, the Accident Prevention Plan, including the Asbestos Hazard Abatement Plan and Activity Hazard Analyses will be enforced as if an addition to the contract. Disregarding the provisions of this contract or the accepted Accident Prevention Plan will be cause for stopping of work, at the discretion of the Contracting Officer, until the matter has been rectified.

1.9 SECURITY

Barriers to prevent entry of unauthorized personnel shall be provided for each regulated area. A log book shall be kept documenting entry into and out of the regulated area. Entry into regulated areas shall only be by personnel authorized by the Contractor and the Contracting Officer. Personnel authorized to enter regulated areas shall be trained, be medically evaluated, and wear the required personal protective equipment for the specific regulated area to be entered.

1.10 MEDICAL REQUIREMENTS

Medical requirements shall conform to 29 CFR 1926, Section .1101.

1.10.1 Medical Examinations

Before being exposed to airborne asbestos fibers, workers shall be provided with a medical examination as required by 29 CFR 1926, Section .1101 and other pertinent state or local requirements. This requirement shall have been satisfied within the last 12 months. The same medical examination shall be given on an annual basis to employees engaged in an occupation involving asbestos and within 30 calendar days before or after the termination of employment in such occupation. X-ray films of asbestos workers shall be identified to the consulting radiologist and medical record jackets shall be marked with the word "asbestos."

1.10.1.1 Information Provided to the Physician

The Contractor shall provide the following information in writing to the examining physician:

a. A copy of 29 CFR 1926, Section .1101 and Appendices D, E, G, and I;

b. A description of the affected employee's duties as they relate to the employee's exposure;

c. The employee's representative exposure level or anticipated exposure level;

d. A description of any personal protective and respiratory equipment used or to be used;

e. Information from previous medical examinations of the affected employee that is not otherwise available to the examining physician.

1.10.1.2 Written Medical Opinion

For each worker, a written medical opinion prepared and signed by a licensed physician indicating the following:

a. Summary of the results of the examination.

b. The potential for an existing physiological condition that would place the employee at an increased risk of health impairment from exposure to asbestos.

c. The ability of the individual to wear personal protective equipment, including respirators, while performing strenuous work tasks under cold and/or heat stress conditions.

d. A statement that the employee has been informed of the results of the examination, provided with a copy of the results, informed of the increased risk of lung cancer attributable to the combined effect of smoking and asbestos exposure, and informed of any medical condition that may result from asbestos exposure.

1.10.2 Medical and Exposure Records

Complete and accurate records shall be maintained of each employee's medical examinations, medical records, and exposure data, as required by 29 CFR 1910, Section .1910.20 and 29 CFR 1926, Section .1101 for a period of 50 years after termination of employment. Records of the required medical examinations and exposure data shall be made available, for inspection and copying, to the Assistant Secretary of Labor for Occupational Safety and Health (OSHA) or authorized representatives of the employee and an employee's physician upon request of the employee or former employee. A copy of the required medical certification for each employee shall be maintained on file at the worksite for review, as requested by the Contracting Officer or the representatives.

1.11 TRAINING PROGRAM

1.11.1 General Training Requirements

The Contractor shall establish a training program as specified by EPA Model Accreditation Plan (MAP), training requirements at 40 CFR 763, Subpart E, Appendix C, the State of Iowa regulation Title 74, Article 31, OSHA requirements at 29 CFR 1926, Section.1101(k)(9), and this specification. Contractor employees shall complete the required training for the type of work they are to perform and such training shall be documented and provided to the Contracting Officer as specified in paragraph QUALIFICATIONS.

1.11.2 Project Specific Training

Prior to commencement of work, each worker shall be instructed in the following project specific training:

a. The hazards and health effects of the specific types of ACM to be abated;

b. The content and requirements of the Contractor's Accident Prevention Plan to include the Asbestos Hazard Abatement Plan and Activity Hazard Analyses and site-specific safety and health precautions;

c. Hazard Communication Program;

d. Hands-on training for each asbestos abatement technique to be employed;

e. Heat and/or cold stress monitoring specific to this project;

f. Air monitoring program and procedures;

g. Medical surveillance to include medical and exposure record-keeping procedures;

h. The association of cigarette smoke and asbestos-related disease;

i. Security procedures;

j. Specific work practice controls and engineering controls required for each Class of work in accordance with 29 CFR 1926, Section .1101.

1.12 RESPIRATORY PROTECTION PROGRAM

The Contractor shall establish in writing, and implement a respiratory protection program in accordance with 29 CFR 1926, Section .1101, 29 CFR 1910, Section .134, ANSI Z88.2, CGA G-7, CGA G-7.1 and DETAIL SHEET 12. The Contractor shall establish minimum respiratory protection requirements based on measured or anticipated levels of airborne asbestos fiber concentrations encountered during the performance of the asbestos abatement work. The Contractor's respiratory protection program shall include, but not be limited to, the following elements:

a. The company policy, used for the assignment of individual responsibility, accountability, and implementation of the respiratory protection program.

b. The standard operating procedures covering the selection and use of respirators. Respiratory selection shall be determined by the hazard to which the worker is exposed.

c. Medical evaluation of each user to verify that the worker may be assigned to an activity where respiratory protection is required.

d. Training in the proper use and limitations of respirators.

e. Respirator fit-testing, i.e., quantitative, qualitative and individual functional fit checks.

f. Regular cleaning and disinfection of respirators.

g. Routine inspection of respirators during cleaning and after each use when designated for emergency use.

h. Storage of respirators in convenient, clean, and sanitary locations.

i. Surveillance of regulated area conditions and degree of employee exposure (e.g., through air monitoring).

j. Regular evaluation of the continued effectiveness of the respiratory protection program.

k. Recognition and procedures for the resolution of special problems as they affect respirator use (e.g., no facial hair that comes between the respirator face piece and face or interferes with valve function; prescription eye wear usage; contact lenses usage; etc.).

l. Proper training in putting on and removing respirators.

1.12.1 Respiratory Fit Testing

A qualitative or quantitative fit test conforming to 29 CFR 1926, Section 1101, Appendix C shall be conducted for each Contractor worker required to wear a respirator, and for the Contracting Officer and authorized visitors who enter a regulated area where respirators are required to be worn. A respirator fit test shall be performed for each worker wearing a negative-pressure respirator prior to initially wearing a respirator on this project and every 6 months thereafter. The qualitative fit tests may be used only for testing the fit of half-mask respirators where they are permitted to be worn, or of full-facepiece air purifying respirators where they are worn at levels at which half-facepiece air purifying respirators are permitted. If physical changes develop that will affect the fit, a new fit test for the worker shall be performed. Functional fit checks shall be performed by employees each time a respirator is put on and in accordance with the manufacturer's recommendation.

1.12.2 Respirator Selection and Use Requirements

The Contractor shall provide respirators, and ensure that they are used as required by 29 CFR 1926, Section .1101 and in accordance with the manufacturer's recommendations. Respirators shall be jointly approved by the Mine Safety and Health Administration and the National Institute for Occupational Safety and Health (MSHA/NIOSH), or by NIOSH, under the provisions of 42 CFR 84, for use in environments containing airborne asbestos fibers. Personnel who handle ACM, enter regulated areas that require the wearing of a respirator, or who are otherwise carrying out abatement activities that require the wearing of a respirator, shall be provided with approved respirators that are fully protective of the worker at the measured or anticipated airborne asbestos concentration level to be encountered. For air-purifying respirators, the particulate filter portion of the cartridges or canister approved for use in airborne asbestos environments shall be high-efficiency particulate air (HEPA). The initial respirator selection and the decisions regarding the upgrading or downgrading of respirator type shall be made by the Contractor's Designated IH based on the measured or anticipated airborne asbestos fiber concentrations to be encountered. Recommendations made by the Contractor to downgrade respirator type shall be submitted in writing to the Contracting Officer. The Contractor's Designated Competent Person shall have the authority to take immediate action to upgrade or downgrade respiratory type when there is an immediate danger to the health and safety of the wearer. Respirators shall be used in the following circumstances:

a. During all Class I asbestos jobs.

b. During all Class II work where the ACM is not removed in a substantially intact state.

c. During all Class II and III work which is not performed using wet methods. Respirators need not be worn during removal of ACM from sloped roofs when a negative exposure assessment has been made and ACM is removed in an intact state.

d. During all Class II and III asbestos jobs where the Contractor does not produce a negative exposure assessment.

e. During all Class III jobs where TSI or surfacing ACM is being disturbed.

f. During all Class IV work performed within regulated areas where employees performing other work are required to wear respirators.

g. During all work where employees are exposed above the PEL-TWA or PEL-Excursion Limit.

h. In emergencies

1.12.3 Class I Work

The Contractor shall provide: (1) a tight-fitting, powered air purifying respirator equipped with high efficiency filters, or (2) a full-facepiece supplied air respirator operated in the pressure demand mode, equipped with HEPA egress cartridges, or (3) an auxiliary positive pressure self-contained breathing apparatus, for all employees within the regulated area where Class I work is being performed; provided that a negative exposure assessment has not been produced, and that the exposure level will not exceed 1 f/cc as an 8-hour time weighted average. A full-facepiece supplied air respirator, operated in the pressure demand mode, equipped with an auxiliary positive pressure self-contained breathing apparatus shall be provided under such conditions, if the exposure assessment indicates exposure levels above 1 f/cc as an 8-hour time weighted average.

1.12.4 Class II and III Work

The Contractor shall provide an air purifying respirator, other than a disposable respirator, equipped with high-efficiency filters whenever the employee performs Class II and III asbestos jobs where the Contractor does not produce a negative exposure assessment ; and Class III jobs where TSI or surfacing ACM is being disturbed.

1.12.5 Sanitation

Employees who wear respirators shall be permitted to leave work areas to wash their faces and respirator facepieces whenever necessary to prevent skin irritation associated with respirator use.

1.13 HAZARD COMMUNICATION PROGRAM

A hazard communication program shall be established and implemented in accordance with 29 CFR 1926, Section .59. Material safety data sheets (MSDSs) shall be provided for all hazardous materials brought onto the worksite. One copy shall be provided to the Contracting Officer and 1 copy shall be included in the Contractor's Hazard Communication Program.

1.14 LICENSES, PERMITS AND NOTIFICATIONS

1.14.1 General Legal Requirements

Necessary licenses, permits and notifications shall be obtained in conjunction with the project's asbestos abatement, transportation and disposal actions and timely notification furnished of such actions as required by federal, state, regional, and local authorities. The Contractor shall notify the Regional Office of the USEPA, state's environmental protection agency responsible for asbestos air emissions, any local air pollution control district/agency, state OSHA program and the Contracting Officer in writing, at least 10 days prior to the commencement of work, in accordance with 40 CFR 61, Subpart M, and state and local requirements to include the mandatory "Notification of Demolition and Renovation Record" form and other required notification documents. Notification shall be by Certified Mail, Return Receipt Requested. The Contractor shall furnish copies of the receipts to the Contracting Officer, in writing, prior to the commencement of work. A copy of the rental company's written acknowledgment and agreement shall be provided as required by paragraph RENTAL EQUIPMENT. For licenses, permits, and notifications that the Contractor is responsible for obtaining, the Contractor shall pay any associated fees or other costs incurred.

1.14.2 Litigation and Notification

The Contractor shall notify the Contracting Officer if any of the following occur:

a. The Contractor or any of the subcontractors are served with notice of violation of any law, regulation, permit or license which relates to this contract;

b. Proceedings are commenced which could lead to revocation of related permits or licenses; permits, licenses or other Government authorizations relating to this contract are revoked;

c. Litigation is commenced which would affect this contract;

d. The Contractor or any of the subcontractors become aware that their equipment or facilities are not in compliance or may fail to comply in the future with applicable laws or regulations.

1.15 PERSONAL PROTECTIVE EQUIPMENT

Three complete sets of personal protective equipment shall be made available to the Contracting Officer and authorized visitors for entry to the regulated area. Contracting Officer and authorized visitors shall be provided with training equivalent to that provided to Contractor employees in the selection, fitting, and use of the required personal protective equipment and the site safety and health requirements. Contractor workers shall be provided with personal protective clothing and equipment and the Contractor shall ensure that it is worn properly. The Contractor's Designated IH and Designated Competent Person shall select and approve all the required personal protective clothing and equipment to be used.

1.15.1 Respirators

Respirators shall be in accordance with paragraph RESPIRATORY PROTECTION PROGRAM.

1.15.2 Whole Body Protection

Personnel exposed to airborne concentrations of asbestos that exceed the PELs, or for all OSHA Classes of work for which a required negative exposure assessment is not produced, shall be provided with whole body protection and such protection shall be worn properly. The Contractor's Designated IH and Competent Person shall select and approve the whole body protection to be used. The Competent Person shall examine work suits worn by employees at least once per work shift for rips or tears that may occur during performance of work. When rips or tears are detected while an employee is working, rips and tears shall be immediately mended, or the work suit shall be immediately replaced. Disposable whole body protection shall be disposed of as asbestos contaminated waste upon exiting from the regulated area. Reusable whole body protection worn shall be either disposed of as asbestos contaminated waste upon exiting from the regulated area or be properly laundered in accordance with 29 CFR 1926, Section .1101. Whole body protection used for asbestos abatement shall not be removed from the worksite by a worker to be cleaned. Recommendations made by the Contractor's Designated IH to downgrade whole body protection shall be submitted in writing to the Contracting Officer. The Contractor's Designated Competent Person, in consultation with the Designated IH, has the authority to take immediate action to upgrade or downgrade whole body protection when there is an immediate danger to the health and safety of the wearer.

1.15.2.1 Coveralls

Disposable-impermeable coveralls with a zipper front shall be provided. Sleeves shall be secured at the wrists, and foot coverings secured at the ankles. See DETAIL SHEET 13.

1.15.2.2 Work Clothing

An additional coverall shall be provided when the abatement and control method employed does not provide for the exit from the regulated area directly into an attached decontamination unit. Cloth work clothes for wear under the protective coverall, and foot coverings, shall be provided when work is being conducted in low temperature conditions. Cloth work clothes shall be either disposed of as asbestos contaminated waste or properly laundered in accordance with 29 CFR 1926, Section .1101.

1.15.2.3 Gloves

Gloves shall be provided to protect the hands. Where there is the potential for hand injuries (i.e., scrapes, punctures, cuts, etc.) a suitable glove shall be provided and used.

1.15.2.4 Foot Coverings

Cloth socks shall be provided and worn next to the skin. Footwear, as required by OSHA and EM 385-1-1, that is appropriate for safety and health hazards in the area shall be worn. Rubber boots shall be used in moist or wet areas. Reusable footwear removed from the regulated area shall be thoroughly decontaminated or disposed of as ACM waste. Disposable protective foot covering shall be disposed of as ACM waste. If rubber boots are not used, disposable foot covering shall be provided.

1.15.2.5 Head Covering

Hood type disposable head covering shall be provided. In addition, protective head gear (hard hats) shall be provided as required. Hard hats

shall only be removed from the regulated area after being thoroughly decontaminated.

1.15.2.6 Protective Eye Wear

Eye protection provided shall be in accordance with ANSI Z87.1.

1.16 HYGIENE FACILITIES AND PRACTICES

The Contractor shall establish a decontamination area for the decontamination of employees, material and equipment. The Contractor shall ensure that employees enter and exit the regulated area through the decontamination area. The decontamination facility used shall comply with Federal and state regulations and these specifications.

1.16.1 Shower Facilities

Shower facilities, when provided, shall comply with 29 CFR 1910, Section .141(d)(3).

1.16.2 3-Stage Decontamination Area

A temporary negative pressure decontamination unit that is adjacent and attached in a leak-tight manner to the regulated area shall be provided where appropriate for the work performed and as described in SET-UP DETAIL SHEET Numbers 22 and 23. Utilization of prefabricated units shall have prior approval of the Contracting Officer. The decontamination unit shall have an equipment room and a clean room separated by a shower that complies with 29 CFR 1910, Section .141 (unless the Contractor can demonstrate that such facilities are not feasible). Equipment and surfaces of containers filled with ACM shall be cleaned prior to removing them from the equipment room or area. Surfaces of the equipment room shall be wet wiped 2 times after each shift. Materials used for wet wiping shall be disposed of as asbestos contaminated waste. Two separate lockers shall be provided for each asbestos worker, one in the equipment room and one in the clean room. [If approved by the Contracting Officer, hot water service may be secured from the building hot water system provided backflow protection is installed by the Contractor at the point of connection. Should sufficient hot water be unavailable, the Contractor shall provide a minimum 40 gal. electric water heater with minimum recovery rate of 20 gal. per hour and a temperature controller for each showerhead. The Contractor shall provide a minimum of 2 showers. Instantaneous type in-line water heater may be incorporated at each shower head in lieu of hot water heater, upon approval by the Contracting Officer. Flow and temperature controls shall be located within the shower and shall be adjustable by the user. The wastewater pump shall be sized for 1.25 times the showerhead flow-rate at a pressure head sufficient to satisfy the filter head loss and discharge line losses. The pump shall supply a minimum 25 gpm flow with 35 ft. of pressure head. Used shower water shall be collected and filtered to remove asbestos contamination. Filters and residue shall be disposed of as asbestos contaminated material, per DETAIL SHEETS 9 and 14. Filtered water shall be discharged to the sanitary system. Wastewater filters shall be installed in series with the first stage pore size of 20 microns and the second stage pore size of 5 microns. The floor of the decontamination unit's clean room shall be kept dry and clean at all times. Water from the shower shall not be allowed to wet the floor in the clean room. Surfaces of the clean room and shower shall be wet-wiped 2 times after each shift change with a disinfectant solution. Proper housekeeping and hygiene requirements shall be maintained. Soap and towels shall be provided for showering, washing

and drying. Any cloth towels provided shall be disposed of as ACM waste or shall be laundered in accordance with 29 CFR 1926, Section .1101.

1.16.3 Single Stage Decontamination Area

A decontamination area (equipment room/area) may be provided for Class I work involving less than 25 feet or 10 square feet of TSI or surfacing ACM, and for Class II and Class III asbestos work operations where exposures exceed the PELs or where there is no negative exposure assessment produced before the operation. The equipment room or area shall be adjacent to the regulated area for the decontamination of employees, material, and their equipment which is contaminated with asbestos. The equipment room or area shall consist of an area covered by an impermeable drop cloth on the floor or horizontal working surface. The area must be of sufficient size to accommodate cleaning of equipment and removing personal protective equipment without spreading contamination beyond the area. Surfaces of the equipment room shall be wet wiped 2 times after each shift. Materials used for wet wiping shall be disposed of as asbestos contaminated waste.

1.16.4 Decontamination Area Entry Procedures

The Contractor shall ensure that employees entering the decontamination area through the clean room or clean area:

a. Remove street clothing in the clean room or clean area and deposit it in lockers.

b. Put on protective clothing and respiratory protection before leaving the clean room or clean area.

c. Pass through the equipment room to enter the regulated area.

1.16.5 Decontamination Area Exit Procedures

The Contractor shall ensure that the following procedures are followed:

a. Before leaving the regulated area, respirators shall be worn while employees remove all gross contamination and debris from their work clothing using a HEPA vacuum.

b. Employees shall remove their protective clothing in the equipment room and deposit the clothing in labeled impermeable bags or containers (see Detail Sheets 9 and 14) for disposal and/or laundering.

c. Employees shall not remove their respirators in the equipment room.

d. Employees shall shower prior to entering the clean room. If a shower has not been located between the equipment room and the clean room or the work is performed outdoors, the Contractor shall ensure that employees engaged in Class I asbestos jobs: a) Remove asbestos contamination from their work suits in the equipment room or decontamination area using a HEPA vacuum before proceeding to a shower that is not adjacent to the work area; or b) Remove their contaminated work suits in the equipment room, without cleaning worksuits, and proceed to a shower that is not adjacent to the work area.

e. After showering, employees shall enter the clean room before changing into street clothes.

1.16.6 Lunch Areas

The Contractor shall provide lunch areas in which the airborne concentrations of asbestos are below 0.01 f/cc.

1.16.7 Smoking

Smoking, if allowed by the Contractor, shall only be permitted in designated areas approved by the Contracting Officer.

1.17 REGULATED AREAS

All Class I, II, asbestos work shall be conducted within regulated areas. The regulated area shall be demarcated to minimize the number of persons within the area and to protect persons outside the area from exposure to airborne asbestos. Where critical barriers or negative pressure enclosures are used, they shall demarcate the regulated area. Access to regulated areas shall be limited to authorized persons. The Contractor shall control access to regulated areas, ensure that only authorized personnel enter, and verify that Contractor required medical surveillance, training and respiratory protection program requirements are met prior to allowing entrance.

1.18 WARNING SIGNS AND TAPE

Warning signs and tape printed in English shall be provided at the regulated boundaries and entrances to regulated areas. The Contractor shall ensure that all personnel working in areas contiguous to regulated areas comprehend the warning signs. Signs shall be located to allow personnel to read the signs and take the necessary protective steps required before entering the area. Warning signs, as shown and described in DETAIL SHEET 11, shall be in vertical format conforming to 29 CFR 1910 and 29 CFR 1926, Section .1101, a minimum of 20 by 14 inches, and displaying the following legend in the lower panel:

DANGER
ASBESTOS
CANCER AND LUNG DISEASE HAZARD
AUTHORIZED PERSONNEL ONLY
RESPIRATORS AND PROTECTIVE CLOTHING ARE REQUIRED IN THIS AREA

Spacing between lines shall be at least equal to the height of the upper of any two lines. Warning tape shall be provided as shown and described on DETAIL SHEET 11. Decontamination unit signage shall be as shown and described on DETAIL SHEET 15.

1.19 WARNING LABELS

Warning labels shall be affixed to all asbestos disposal containers used to contain asbestos materials, scrap, waste debris, and other products contaminated with asbestos. Containers with preprinted warning labels conforming to requirements are acceptable. Warning labels shall be as described in DETAIL SHEET 14, shall conform to 29 CFR 1926, Section .1101 and shall be of sufficient size to be clearly legible displaying the following legend:

DANGER
CONTAINS ASBESTOS FIBERS
AVOID CREATING DUST
CANCER AND LUNG DISEASE HAZARD

1.20 LOCAL EXHAUST VENTILATION

Local exhaust ventilation units shall conform to ANSI Z9.2 and 29 CFR 1926, Section .1101. Filters on local exhaust system equipment shall conform to ANSI Z9.2 and UL 586. Filter shall be UL labeled.

1.21 TOOLS

Vacuums shall be leak proof to the filter, equipped with HEPA filters, of sufficient capacity and necessary capture velocity at the nozzle or nozzle attachment to efficiently collect, transport and retain the ACM waste material. Power tools shall not be used to remove ACM unless the tool is equipped with effective, integral HEPA filtered exhaust ventilation capture and collection system, or has otherwise been approved for use by the Contracting Officer. Residual asbestos shall be removed from reusable tools prior to storage and reuse. Reusable tools shall be thoroughly decontaminated prior to being removed from regulated areas.

1.22 RENTAL EQUIPMENT

If rental equipment is to be used, written notification shall be provided to the rental agency, concerning the intended use of the equipment, the possibility of asbestos contamination of the equipment and the steps that will be taken to decontaminate such equipment. A written acceptance of the terms of the Contractor's notification shall be obtained from the rental agency.

1.23 AIR MONITORING EQUIPMENT

The Contractor's Designated IH shall approve air monitoring equipment to be used to collect samples. The equipment shall include, but shall not be limited to:

a. High-volume sampling pumps that can be calibrated and operated at a constant airflow up to 16 liters per minute when equipped with a sampling train of tubing and filter cassette.

b. Low-volume, battery powered, body-attachable, portable personal pumps that can be calibrated to a constant airflow up to approximately 3.5 liters per minute when equipped with a sampling train of tubing and filter cassette, and a self-contained rechargeable power pack capable of sustaining the calibrated flow rate for a minimum of 10 hours. The pumps shall also be equipped with an automatic flow control unit which shall maintain a constant flow, even as filter resistance increases due to accumulation of fiber and debris on the filter surface.

c. Single use standard 25 mm diameter cassette, open face, 0.8 micron pore size, mixed cellulose ester membrane filters and cassettes with 50 mm electrically conductive extension cowl, and shrink bands, to be used with low flow pumps in accordance with 29 CFR 1926, Section .1101 for personal air sampling.

d. Appropriate plastic tubing to connect the air sampling pump to the

selected filter cassette.

e. A flow calibrator capable of calibration to within plus or minus 2 percent of reading over a temperature range of minus 4 to plus 140 degrees F and traceable to a NIST primary standard.

1.24 EXPENDABLE SUPPLIES

1.24.1 Glovebag

Glovebags shall be provided as described in 29 CFR 1926, Section .1101 and SET-UP DETAIL SHEET 10. The glovebag assembly shall be 6 mil thick plastic, prefabricated and seamless at the bottom with preprinted OSHA warning label.

1.24.2 Duct Tape

Industrial grade duct tape of appropriate widths suitable for bonding sheet plastic and disposal container shall be provided.

1.24.3 Disposal Containers

Leak-tight (defined as solids, liquids, or dust that cannot escape or spill out) disposal containers shall be provided for ACM wastes as required by 29 CFR 1926 Section .1101 and DETAIL SHEETS 9A, 9B, and 14.

1.24.4 Disposal Bags

Leak-tight bags, 6 mil thick, shall be provided for placement of asbestos generated waste as described in DETAIL SHEET 9A.

1.24.5 Sheet Plastic

Sheet plastic shall be polyethylene of 6 mil minimum thickness and shall be provided in the largest sheet size necessary to minimize seams Film shall conform to ASTM D 4397.

1.24.6 Amended Water

Amended water shall meet the requirements of ASTM D 1331.

1.24.7 Mastic Removing Solvent

Mastic removing solvent shall be nonflammable and shall not contain methylene chloride, glycol ether, or halogenated hydrocarbons. Solvents used onsite shall have a flash point greater than 140 degrees F.

1.24.8 Leak-tight Wrapping

Two layers of 6 mil minimum thick polyethylene sheet stock shall be used for the containment of removed asbestos-containing components or materials too large to be placed in disposal bags as described in DETAIL SHEET 9B. Upon placement of the ACM component or material, each layer shall be individually leak-tight sealed with duct tape.

1.25 MISCELLANEOUS ITEMS

A sufficient quantity of other items, such as, but not limited to: scrapers, brushes, brooms, staple guns, tarpaulins, shovels, rubber

squeegees, dust pans, other tools, scaffolding, staging, enclosed chutes, wooden ladders, lumber necessary for the construction of containments, UL approved temporary electrical equipment, material and cords, ground fault circuit interrupters, water hoses of sufficient length, fire extinguishers, first aid kits, portable toilets, logbooks, log forms, markers with indelible ink, spray paint in bright color to mark areas, project boundary fencing, etc., shall be provided.

PART 2 PRODUCTS

2.1 ENCAPSULANTS

Encapsulants shall conform to USEPA requirements, shall contain no toxic or hazardous substances and no solvent and shall meet the following requirements:

ALL ENCAPSULANTS

Requirement	Test Standard
Flame Spread - 25, Smoke Emission - 50	ASTM E 84
Combustion Toxicity Zero Mortality	Univ. of Pittsburgh Protocol
Life Expectancy, 20 yrs Accelerated Aging Test	ASTM C 732
Permeability, Minimum 0.4 perms	ASTM E 96

Additional Requirements for Lockdown Encapsulant

Requirement	Test Standard
Fire Resistance, Negligible affect on fire resistance rating over 3 hour test(Tested with fireproofing over encapsulant applied directly to steel member)	ASTM E 119
Bond Strength, 100 pounds of force/foot (Tests compatibility with cementitious and fibrous fireproofing)	ASTM E 736

PART 3 EXECUTION

3.1 GENERAL REQUIREMENTS

Asbestos abatement work tasks shall be performed as summarized in paragraph DESCRIPTION OF WORK and the Contractor's Accident Prevention Plan, Asbestos Hazard Abatement Plan, and the Activity Hazard Analyses. The Contractor shall use the engineering controls and work practices required in 29 CFR 1926, Section .1101(g) in all operations regardless of the levels of exposure. Personnel shall wear and utilize protective clothing and equipment as specified. The Contractor shall not permit eating, smoking, drinking, chewing or applying cosmetics in the regulated area. All hot work (burning, cutting, welding, etc.) shall be conducted under controlled conditions in conformance with 29 CFR 1926, Section .352, Fire Prevention. Personnel of other trades, not engaged in asbestos

abatement activities, shall not be exposed at any time to airborne concentrations of asbestos unless all the administrative and personal protective provisions of the Contractor's Accident Prevention Plan are complied with. Power to the regulated area shall be locked-out and tagged in accordance with 29 CFR 1910, and temporary electrical service with ground fault circuit interrupters shall be provided as needed. Temporary electrical service shall be disconnected when necessary for wet removal. The Contractor shall stop abatement work in the regulated area immediately when the airborne total fiber concentration: (1) equals or exceeds 0.01 f/cc, or the pre-abatement concentration, whichever is greater, outside the regulated area; or (2) equals or exceeds 1.0 f/cc inside the regulated area. The Contractor shall correct the condition to the satisfaction of the Contracting Officer, including visual inspection and air sampling. Work shall resume only upon notification by the Contracting Officer. Corrective actions shall be documented.

3.2 PROTECTION OF ADJACENT WORK OR AREAS TO REMAIN

Asbestos abatement shall be performed without damage to or contamination of adjacent work or area. Where such work or area is damaged or contaminated, as verified by the Contracting Officer using visual inspection or sample analysis, it shall be restored to its original condition or decontaminated by the Contractor at no expense to the Government, as deemed appropriate by the Contracting Officer. This includes inadvertent spill of dirt, dust or debris in which it is reasonable to conclude that asbestos may exist. When these spills occur, work shall stop in all effected areas immediately and the spill shall be cleaned. When satisfactory visual inspection and air sampling analysis results are obtained and have been evaluated by the Contractor's Designated IH and the Contracting Officer, work shall proceed.

3.3 OBJECTS

3.3.1 Removal of Mobile Objects

Mobile objects, furniture, and equipment will be removed from the area of work by the Government before asbestos abatement work begins.

3.4 BUILDING VENTILATION SYSTEM AND CRITICAL BARRIERS

Building ventilating systems supplying air into or returning air out of a regulated area shall be isolated by airtight seals to prevent the spread of contamination throughout the system. Air-tight critical barriers shall be installed on building ventilating openings located inside the regulated area that supply or return air from the building ventilation system or serve to exhaust air from the building. 2 layers of polyethylene. Edges to wall, ceiling and floor surfaces shall be sealed with industrial grade duct tape. Critical barriers shall be installed as shown on drawings and appended SET-UP DETAIL SHEETS.

3.5 PRECLEANING

Surfaces shall be cleaned by HEPA vacuum prior to establishment of containment.

3.6 METHODS OF COMPLIANCE

3.6.1 Mandated Practices

The Contractor shall employ proper handling procedures in accordance with

29 CFR 1926 and 40 CFR 61, Subpart M, and the specified requirements. The specific abatement techniques and items identified shall be detailed in the Contractor's Asbestos Hazard Abatement Plan including, but not limited to, details of construction materials, equipment, and handling procedures. The Contractor shall use the following engineering controls and work practices in all operations, regardless of the levels of exposure:

a. Vacuum cleaners equipped with HEPA filters to collect debris and dust containing ACM.

b. Wet methods or wetting agents to control employee exposures during asbestos handling, removal, cutting, and cleanup; except where it can be demonstrated that the use of wet methods is unfeasible due to, for example, the creation of electrical hazards, equipment malfunction, and in roofing.

c. Prompt clean-up and disposalin leak-tight containers of wastes and debris contaminated with asbestos.

d. Inspection and repair of polyethylene in work and high traffic areas.

e. Cleaning of equipment and surfaces of containers filled with ACM prior to removing them from the equipment room or area.

3.6.2 Control Methods

The Contractor shall use the following control methods to comply with the PELs:

a. Local exhaust ventilation equipped with HEPA filter dust collection systems;

b. Enclosure or isolation of processes producing asbestos dust;

c. Ventilation of the regulated area to move contaminated air away from the breathing zone of employees and toward a filtration or collection device equipped with a HEPA filter;

d. Use of other work practices and engineering controls;

e. Where the feasible engineering and work practice controls described above are not sufficient to reduce employee exposure to or below the PELs, the Contractor shall use them to reduce employee exposure to the lowest levels attainable by these controls and shall supplement them by the use of respiratory protection that complies with paragraph, RESPIRATORY PROTECTION PROGRAM.

3.6.3 Unacceptable Practices

The following work practices and engineering controls shall not be used for work related to asbestos or for work which disturbs ACM, regardless of measured levels of asbestos exposure or the results of initial exposure assessments:

a. High-speed abrasive disc saws that are not equipped with point of cut ventilator or enclosures with HEPA filtered exhaust air.

b. Compressed air used to remove asbestos, or materials containing asbestos, unless the compressed air is used in conjunction with an enclosed ventilation system designed to capture the dust cloud created by the compressed air.

c. Dry sweeping, shoveling, or other dry clean-up of dust and debris containing ACM.

d. Employee rotation as a means of reducing employee exposure to asbestos.

3.6.4 Class I Work Procedures

In addition to requirements of paragraphs Mandated Practices and Control Methods, the following engineering controls and work practices shall be used:

a. A Competent Person shall supervise the installation and operation of the control system.

b. For jobs involving the removal of more than 25 feet or 10 square feet of TSI or surfacing material, the Contractor shall place critical barriers over all openings to the regulated area.

c. HVAC systems shall be isolated in the regulated area by sealing with a double layer of plastic or air-tight rigid covers.

d. Impermeable dropcloths (6 mil or greater thickness) shall be placed on surfaces beneath all removal activity.

e. Objects within the regulated area shall be handled as specified in paragraph OBJECTS.

f. Where a negative exposure assessment has not been provided or where exposure monitoring shows the PEL was exceeded, the regulated area shall be ventilated to move contaminated air away from the employee's breathing zone toward a HEPA unit or collection device.

3.6.5 Specific Control Methods for Class I Work

In addition to requirements of paragraph Class I Work Procedures, Class I asbestos work shall be performed using one or more of the control methods identified in the subparagraphs below. The Contractor shall propose the most suitable and cost efficient method for each regulated area in the Asbestos Hazard Abatement Plan.

3.6.5.1 Glovebag Systems

Glovebag systems shall be as shown in SETUP DETAIL SHEET 10. The glovebag system shall be used to remove ACM from straight runs of piping and elbows and other connections. Glovebags shall be used without modification and shall be smoke-tested for leaks and any leaks sealed prior to use. Glovebags shall be installed to completely cover the circumference of pipe or other structures where the work is to be done. Glovebags shall be used only once and shall not be moved. Glovebags shall not be used on surfaces that have temperatures exceeding 150 degrees F. Prior to disposal, glovebags shall be collapsed by removing air within them using a HEPA vacuum. Before beginning the operation, loose and friable material

adjacent to the glovebag operation shall be wrapped and sealed in 2 layers of plastic or otherwise rendered intact. At least 2 persons shall perform Class I glovebag removal. Asbestos regulated work areas shall be established as specified and shown on detailed drawings and plans for glovebag abatement. Designated boundary limits for the asbestos work shall be established with rope or other continuous barriers and all other requirements for asbestos control areas shall be maintained, including area signage and boundary warning tape as specified in SET-UP DETAIL SHEET 11.

a. In addition to requirements for negative pressure glovebag systems above, the Contractor shall attach HEPA vacuum systems or other devices to the bag to prevent collapse during removal of ACM from straight runs of piping and elbows and other connections.

3.6.5.2 Mini-Enclosures

Single bulkhead containment
or Mini-containment (small walk-in enclosure) as shown in SETUP DETAIL SHEET 5, 6, and 7 to accommodate no more than 2 persons, may be used if the disturbance or removal can be completely contained by the enclosure with the following specifications and work practices. The mini-enclosure shall be inspected for leaks and smoke tested before each use. Air movement shall be directed away from the employee's breathing zone within the mini-enclosure.

3.6.5.3 Wrap and Cut Operation

Wrap and cut operations shall be as shown in SETUP DETAIL SHEET 9B and 10. Prior to cutting pipe, the asbestos-containing insulation shall be wrapped with polyethylene and securely sealed with duct tape to prevent asbestos becoming airborne as a result of the cutting process. The following steps shall be taken: install glovebag, strip back sections to be cut 6 inches from point of cut, and cut pipe into manageable sections.

3.6.6 Class II Work

In addition to the requirements of paragraphs Mandated Practices and Control Methods, the following engineering controls and work practices shall be used:

a. A Competent Person shall supervise the work.

b. For indoor work, critical barriers shall be placed over all openings to the regulated area.

c. Impermeable dropcloths shall be placed on surfaces beneath all removal activity.

3.6.7 Specific Control Methods for Class II Work

In addition to requirements of paragraph Class II Work, Class II work shall be performed using the following methods:

3.6.7.1 Vinyl and Asphalt Flooring Materials

When removing vinyl and asphalt flooring materials which contain ACM , the Contractor shall use the following practices as shown in RESPONSE ACTION DETAIL SHEET 56, 57, 58, 59, 60, 61, 62, 63, 64. Resilient sheeting shall be removed by adequately wet methods. Tiles shall be removed intact (if

possible); wetting is not required when tiles are heated and removed intact. Flooring or its backing shall not be sanded. Scraping of residual adhesive and/or backing shall be performed using wet methods. Mechanical chipping is prohibited unless performed in a negative pressure enclosure. Dry sweeping is prohibited. The Contractor shall use vacuums equipped with HEPA filter, disposable dust bag, and metal floor tool (no brush) to clean floors.

3.6.7.2 Roofing Material

When removing roofing materials which contain ACM as described in 29 CFR 1926, Section .1101(g)(8)(ii), the Contractor shall use the following practices as shown in RESPONSE ACTION DETAIL SHEET 74, 75. Roofing material shall be removed in an intact state. Wet methods shall be used to remove roofing materials that are not intact, or that will be rendered not intact during removal, unless such wet methods are not feasible or will create safety hazards. When removing built-up roofs, with asbestos-containing roofing felts and an aggregate surface, using a power roof cutter, all dust resulting from the cutting operations shall be collected by a HEPA dust collector, or shall be HEPA vacuumed by vacuuming along the cut line. Asbestos-containing roofing material shall not be dropped or thrown to the ground, but shall be lowered to the ground via covered, dust-tight chute, crane, hoist or other method approved by the Contracting Officer. Any ACM that is not intact shall be lowered to the ground as soon as practicable, but not later than the end of the work shift. While the material remains on the roof it shall be kept wet or placed in an impermeable waste bag or wrapped in plastic sheeting. Intact ACM shall be lowered to the ground as soon as practicable, but not later than the end of the work shift. Unwrapped material shall be transferred to a closed receptacle precluding the dispersion of dust. Critical barriers shall be placed over roof level heating and ventilation air intakes.

3.6.7.3 Cementitious Siding and Shingles or Transite Panels

When removing cementitious asbestos-containing siding, shingles or transite panels the Contractor shall use the following practices shown in RESPONSE ACTION DETAIL SHEET 81, 82, 83. Intentionally cutting, abrading or breaking siding, shingles, or transite panels is prohibited. Each panel or shingle shall be sprayed with amended water prior to removal. Nails shall be cut with flat, sharp instruments. Unwrapped or unbagged panels or shingles shall be immediately lowered to the ground via covered dust-tight chute, crane or hoist, or placed in an impervious waste bag or wrapped in plastic sheeting and lowered to the ground no later than the end of the work shift.

3.6.7.4 Gaskets

Gaskets shall be thoroughly wetted with amended water prior to removal and immediately placed in a disposal container. If a gasket is visibly deteriorated and unlikely to be removed intact, removal shall be undertaken within a glovebag. Any scraping to remove residue shall be performed wet.

3.6.7.5 Other Class II Jobs

The Contractor shall use the following work practices when performing Class II removal of ACM: The material shall be thoroughly wetted with amended water prior and during its removal. The material shall be removed in an intact state. Cutting, abrading or breaking the material is prohibited. The ACM removed shall be immediately bagged or wrapped.

3.6.8 Alternative Methods for Roofing Materials and Asphaltic Wrap

The Contractor shall use the following engineering controls and work practices when removing, repairing, or maintaining intact pipeline asphaltic wrap, or roof cements, mastics, coatings, or flashings which contain asbestos fibers encapsulated or coated by bituminous or resinous compounds. If during the course of the job the material does not remain intact, the Contractor shall use the procedures described in paragraph Roofing Material. Before work begins, and as needed during the job, the Designated Competent Person shall conduct an inspection and determine that the roofing material is intact and will likely remain intact. The material shall not be sanded, abraded, or ground. Manual methods which would render the material non-intact shall not be used. Roofing material shall not be dropped or thrown to the ground but shall be lowered via covered, dust-tight chute, crane, hoist or other method approved by the Contracting Officer. All such material shall be removed from the roof as soon as practicable, but not later than the end of the work shift. Removal or disturbance of pipeline asphaltic wrap shall be performed using wet methods.

3.6.9 Cleaning After Asbestos Removal

After completion of all asbestos removal work, surfaces from which ACM has been removed shall be wet wiped or sponged clean, or cleaned by some equivalent method to remove all visible residue. Run-off water shall be collected and filtered through a dual filtration system. A first filter shall be provided to remove fibers 20 micrometers and larger, and a final filter provided that removes fibers 5 micrometers and larger. After the gross amounts of asbestos have been removed from every surface, remaining visible accumulations of asbestos on floors shall be collected using plastic shovels, rubber squeegees, rubber dustpans, and HEPA vacuum cleaners as appropriate to maintain the integrity of the regulated area. When TSI and surfacing material has been removed, workmen shall use HEPA vacuum cleaners to vacuum every surface. Surfaces or locations which could harbor accumulations or residual asbestos dust shall be checked after vacuuming to verify that no asbestos-containing material remains; and shall be re-vacuumed as necessary to remove the ACM.

3.6.10 Class I Asbestos Work Response Action Detail Sheets

The following Class I Asbestos Work Response Action Detail Sheets are appended to the end of this specification section:

Pipe Insulation (Using a Glovebag): See Sheet 87

p. Pipe Insulation (Using a Mini-Containment Area): See Sheet 89

3.6.11 Class II Asbestos Work Response Action Detail Sheets

The following Class II Asbestos Work Response Action Detail Sheet is specified on Table 1 for each individual work task to be performed:

g. Vinyl or Vinyl Asbestos Tile Adhered to Concrete Floor System by Asbestos-Containing Adhesive: See Sheet 56

h. Vinyl or Vinyl Asbestos Tile Adhered to Wood Floor System by Asbestos Containing Adhesive: See Sheet 60

i. Vinyl Asbestos Tile Adhered to Concrete Floor System by Asbestos

Containing Adhesive: See Sheet 57

j. Vinyl Asbestos Tile Adhered to Concrete Floor System by Asbestos Free Adhesive: See Sheet 58

s. Roof, Shingles and Underlayment: See Sheet 75

3.7 FINAL CLEANING AND VISUAL INSPECTION

Upon completion of abatement, the regulated area shall be cleaned by collecting, packing, and storing all gross contamination; see SET-UP DETAIL SHEETS 9, 14 and 20. A final cleaning shall be performed using HEPA vacuum and wet cleaning of all exposed surfaces and objects in the regulated area. Upon completion of the cleaning, the Contractor shall conduct a visual pre-inspection of the cleaned area in preparation for a final inspection before final air clearance monitoring and recleaning, as necessary. Upon completion of the final cleaning, the Contractor and the Contracting Officer shall conduct a final visual inspection of the cleaned regulated area in accordance with ASTM E 1368 and document the results on the Final Cleaning and Visual Inspection as specified on the SET-UP DETAIL SHEET 19. If the Contracting Officer rejects the clean regulated area as not meeting final cleaning requirements, the Contractor shall reclean as necessary and have a follow-on inspection conducted with the Contracting Officer. Recleaning and follow-up reinspection shall be at the Contractor's expense.

3.8 EXPOSURE ASSESSMENT AND AIR MONITORING

3.8.1 General Requirements For Exposure

Exposure assessment, air monitoring and analysis of airborne concentration of asbestos fibers shall be performed in accordance with 29 CFR 1926, Section .1101, the Contractor's air monitoring plan, and as specified. Personal exposure air monitoring (collected at the breathing zone) that is representative of the exposure of each employee who is assigned to work within a regulated area shall be performed by the Contractor. Breathing zone samples shall be taken for at least 25 percent of the workers in each shift, or a minimum of 2, whichever is greater. Air monitoring results at the 95 percent confidence level shall be calculated as shown in Table 2 at the end of this section. Environmental air monitoring shall be performed by the Contractor for indoor regulated areas. . Final clearance environmental air monitoring (ehre required), shall be performed or overseen by the Contractor's Designated IH . Environmental and final clearance air monitoring shall be performed using NIOSH Pub No. 84-100 Method 7400 (PCM) . For environmental and final clearance, air monitoring shall be conducted at a sufficient velocity and duration to establish the limit of detection of the method used at 0.005 f/cc. Monitoring may be duplicated by the Government at the discretion of the Contracting Officer. Results of breathing zone samples shall be posted at the job site and made available to the Contracting Officer. The Contractor shall maintain a fiber concentration inside a regulated area less than or equal to 0.1 f/cc expressed as an 8 hour, time-weighted average (TWA) during asbestos abatement activities. If fiber concentration rises above 0.1 f/cc, work procedures shall be investigated with the Contracting Officer to determine the cause. At the discretion of the Contracting Officer, fiber concentration may exceed 0.1 f/cc but shall not exceed 1.0 f/cc expressed as an 8-hour TWA. The Contractor's workers shall not be exposed to an airborne fiber concentration in excess of 1.0 f/cc, as averaged over a sampling period of 30 minutes. Should either an environmental concentration of 1.0 f/cc expressed as an 8-hour TWA or a personal

excursion concentration of 1.0 f/cc expressed as a 30-minute sample occur inside a regulated work area, the Contractor shall stop work immediately, notify the Contracting Officer, and implement additional engineering controls and work practice controls to reduce airborne fiber levels below prescribed limits in the work area. Work shall not restart until authorized by the Contracting Officer.

3.8.2 Initial Exposure Assessment

The Contractor shall conduct an exposure assessment immediately before or at the initiation of an asbestos abatement operation to ascertain expected exposures during that operation. The assessment shall be completed in time to comply with the requirements which are triggered by exposure data or the lack of a negative exposure assessment, and to provide information necessary to assure that all control systems planned are appropriate for that operation. The assessment shall take into consideration both the monitoring results and all observations, information or calculations which indicate employee exposure to asbestos, including any previous monitoring conducted in the workplace, or of the operations of the Contractor which indicate the levels of airborne asbestos likely to be encountered on the job. For Class I asbestos work, until the employer conducts exposure monitoring and documents that employees on that job will not be exposed in excess of PELs, or otherwise makes a negative exposure assessment, the Contractor shall presume that employees are exposed in excess of the PEL-TWA and PEL-Excursion Limit.

3.8.3 Negative Exposure Assessment

a. Objective Data: Objective data demonstrating that the product or material containing asbestos minerals or the activity involving such product or material cannot release airborne fibers in concentrations exceeding the PEL-TWA and PEL-Excursion Limit under those work conditions having the greatest potential for releasing asbestos.

b. Prior Asbestos Jobs: Where the Contractor has monitored prior asbestos jobs for the PEL and the PEL-Excursion Limit within 12 months of the current job, the monitoring and analysis were performed in compliance with asbestos standard in effect; the data were obtained during work operations conducted under workplace conditions closely resembling the processes, type of material, control methods, work practices, and environmental conditions used and prevailing in the Contractor's current operations; the operations were conducted by employees whose training and experience are no more extensive than that of employees performing the current job; and these data show that under the conditions prevailing and which will prevail in the current workplace, there is a high degree of certainty that the monitoring covered exposure from employee exposures will not exceed the PEL-TWA and PEL-Excursion Limit.

c. Initial Exposure Monitoring: The results of initial exposure monitoring of the current job, made from breathing zone air samples that are representative of the 8-hour PEL-TWA and 30-minute short-term exposures of each employee. The monitoring covered exposure from operations which are most likely during the performance of the entire asbestos job to result in exposures over the PELs.

3.8.4 Preabatement Environmental Air Monitoring

For indoor regulated area, preabatement environmental air monitoring shall be established 1 day prior to the masking and sealing operations for each regulated area to determine background concentrations before abatement work begins. Preabatement air samples shall be collected using NIOSH Pub No. 84-100 Method 7400, PCM. The Contractor shall propose the number and location of samples in the Asbestos Hazard Abatement Plan.

3.8.5 Environmental Air Monitoring During Abatement

Unless or until the Contractor can provide an exposure assessment that demonstrates that the product or material containing asbestos minerals, or the abatement involving such product or material, cannot release airborne asbestos fibers in concentrations exceeding 0.01 f/cc as a TWA under those work conditions having the greatest potential for releasing asbestos, environmental air monitoring shall be conducted at locations and frequenciesthat will accurately characterize any evolving airborne asbestos fiber concentrations for indoor regulated areas. Environmental air monitoring may be discontinued only if all environmental air monitoring samples, including those inside the regulated area, do not exceed 0.01 f/cc as a TWA. The Contractor shall propose number and location of sampling in the Asbestos Hazard Abatement Plan. . If the sampling outside regulated area shows airborne fiber levels have exceeded background or 0.01 f/cc, whichever is greater, work shall be stopped immediately, and the Contracting Officer notified. The condition causing the increase shall be corrected. Work shall not restart until authorized by the Contracting Officer.

3.8.6 Final Clearance Air Monitoring

Final clearance monitoring shall be conducted for indoor regulated areas. Prior to conducting final clearance air monitoring, the Contractor and the Contracting Officer shall conduct a final visual inspection of the regulated area where asbestos abatement has been completed. The final visual inspection shall be as specified in SET-UP DETAIL SHEET 19. Final clearance air monitoring shall not begin until acceptance of the Contractor's final cleaning by the Contracting Officer. The Contractor's Designated IH shall conduct final clearance air monitoring using aggressive air sampling techniques as defined in EPA 560/5-85-024 or as otherwise required by federal or state requirements. The sampling and analytical method used will be NIOSH Pub No. 84-100Method 7400 (PCM) and Table 3.

3.8.6.1 Final Clearance Requirements, NIOSH PCM Method

For PCM sampling and analysis using NIOSH Pub No. 84-100 Method 7400, the fiber concentration inside the abated regulated area, for each airborne sample, shall be less than 0.01 f/cc. The abatement inside the regulated area is considered complete when every PCM final clearance sample is below the clearance limit. If any sample result is greater than 0.01 total f/cc, the asbestos fiber concentration (asbestos f/cc) may be confirmed from that same filter using NIOSH Pub No. 84-100 Method 7402 (TEM) at Contractor's expense. If any confirmation sample result is greater than 0.01 asbestos f/cc, abatement is incomplete and cleaning shall be repeated. Upon completion of any required recleaning, resampling with results to meet the above clearance criteria shall be done.

3.8.6.2 Air Clearance Failure

If clearance sampling results fail to meet the final clearance requirements, the Contractor shall pay all costs associated with the required recleaning, resampling, and analysis, until final clearance requirements are met.

3.8.7 Air-Monitoring Results and Documentation

Air sample fiber counting shall be completed and results provided within 24 hours (breathing zone samples), and 24 hours (environmental/clearance monitoring) after completion of a sampling period. The Contracting Officer shall be notified immediately of any airborne levels of asbestos fibers in excess of established requirements. Written sampling results shall be provided within 5 working days of the date of collection. The written results shall be signed by testing laboratory analyst, testing laboratory principal and the Contractor's Designated IH . The air sampling results shall be documented on a Contractor's daily air monitoring log. The daily air monitoring log shall contain the following information for each sample:

a. Sampling and analytical method used;

b. Date sample collected;

c. Sample number;

d. Sample type: BZ = Breathing Zone (Personal), P = Preabatement, E = Environmental, C = Abatement Clearance;

e. Location/activity/name where sample collected;

f. Sampling pump manufacturer, model and serial number, beginning flow rate, end flow rate, average flow rate (L/min);

g. Calibration date, time, method, location, name of calibrator, signature;

h. Sample period (start time, stop time, elapsed time (minutes);

i. Total air volume sampled (liters);

j. Sample results (f/cc and S/mm square) if EPA methods are required for final clearance;

k. Laboratory name, location, analytical method, analyst, confidence level. In addition, the printed name and a signature and date block for the Industrial Hygienist who conducted the sampling and for the Industrial Hygienist who reviewed the daily air monitoring log verifying the accuracy of the information.

3.9 CLEARANCE CERTIFICATION

When asbestos abatement is complete, ACM waste is removed from the regulated areas, and final clean-up is completed, the Contracting Officer will certify the areas as safe before allowing the warning signs and boundary warning tape to be removed. The Contractor and the Contracting Officer shall visually inspect all surfaces within the containment for residual material or accumulated debris. The Contractor shall reclean all areas showing dust or residual materials. The Contracting Officer will certify in writing that the area is safe before unrestricted entry is

permitted. The Government will have the option to perform monitoring to certify the areas are safe before entry is permitted.

3.10 CLEANUP AND DISPOSAL

3.10.1 Title to ACM Materials

ACM material resulting from abatement work, except as specified otherwise, shall become the property of the Contractor and shall be disposed of as specified and in accordance with applicable federal, state and local regulations.

3.10.2 Collection and Disposal of Asbestos

All ACM waste, including contaminated wastewater filters, scrap, debris, bags, containers, equipment, and asbestos contaminated clothing, shall be collected and placed in leak-tight containers such as double plastic bags (see DETAIL SHEET 9A); sealed double wrapped polyethylene sheet (see DETAIL 9B); ; or other approved containers. Waste within the containers shall be wetted in case the container is breeched. Asbestos-containing waste shall be disposed of at an EPA, state and local approved asbestos landfill . For temporary storage, sealed impermeable containers shall be stored in an asbestos waste load-out unit or in a storage/transportation conveyance (i.e., dumpster, roll-off waste boxes, etc.) in a manner acceptable to and in an area assigned by the Contracting Officer. Procedure for hauling and disposal shall comply with 40 CFR 61, Subpart M, state, regional, and local standards.

3.10.3 Weigh Bill and Delivery Tickets

Copies of weigh bills and delivery tickets shall be submitted to the Contracting Officer during the progress of the work. The Contractor shall furnish the Contracting Officer scale tickets for each load of ACM weighed and certified. These tickets shall include tare weight; identification mark for each vehicle weighed; and date, time and location of loading and unloading. Tickets shall be furnished at the point and time individual trucks arrive at the worksite. A master log of all vehicle loading shall be furnished for each day of loading operations. Before the final statement is allowed, the Contractor shall file with the Contracting Officer certified weigh bills and/or certified tickets and manifests of all ACM actually disposed by the Contractor for this contract.

3.10.4 Asbestos Waste Shipment Record

The Contractor shall complete and provide the Contracting Officer final completed copies of the Waste Shipment Record for all shipments of waste material as specified in 40 CFR 61, Subpart M and other required state waste manifest shipment records, within 3 days of delivery to the landfill. Each Waste Shipment Record shall be signed and dated by the Contractor], the waste transporter and disposal facility operator.

CERTIFICATE OF WORKER'S ACKNOWLEDGMENT

PROJECT NAME _____ CONTRACT NO. _____
PROJECT ADDRESS _____
CONTRACTOR FIRM NAME _____
EMPLOYEE'S NAME _____,_____,_____,
(Print) (Last) (First) (MI)

Social Security Number: _____-_____-_____,

WORKING WITH ASBESTOS CAN BE DANGEROUS. INHALING ASBESTOS FIBERS HAS BEEN LINKED WITH TYPES OF LUNG DISEASE AND CANCER. IF YOU SMOKE AND INHALE ASBESTOS FIBERS, THE CHANCE THAT YOU WILL DEVELOP LUNG CANCER IS GREATER THAN THAT OF THE NONSMOKING PUBLIC.

Your employer's contract for the above project requires that you be provided and you complete formal asbestos training specific to the type of work you will perform and project specific training; that you be supplied with proper personal protective equipment including a respirator, that you be trained in its use; and that you receive a medical examination to evaluate your physical capacity to perform your assigned work tasks, under the environmental conditions expected, while wearing the required personal protective equipment. These things are to be done at no cost to you. By signing this certification, you are acknowledging that your employer has met these obligations to you. The Contractor's Designated Industrial Hygienist will check the block(s) for the type of formal training you have completed. Review the checked blocks prior to signing this certification.

FORMAL TRAINING:
_____ a. For Competent Persons and Supervisors: I have completed EPA's Model Accreditation Program (MAP) training course, "Contractor/Supervisor", that meets this State's requirements.

b. For Workers:
_____ (1) For OSHA Class I work: I have completed EPA's MAP training course, "Worker", that meets this State's requirements.
_____ (2) For OSHA Class II work (where there will be abatement of more than one type of Class II materials, i.e., roofing, siding, floor tile, etc.): I have completed EPA's MAP training course, "Worker", that meets this State's requirements.
(3) For OSHA Class II work (there will only be abatement of one type of Class II material):
_____ (a) I have completed an 8-hour training class on the elements of 29 CFR 1926, Section .1101(k)(9)(viii), in addition to the specific work practices and engineering controls of 29 CFR 1926, Section .1101(g) and hands-on training.
_____ (b) I have completed EPA's MAP training course, "Worker", that meets this State's requirements.
_____ (4) For OSHA Class III work: I have completed at least a 16-hour course consistent with EPA requirements for training of local education agency maintenance and custodial staff at 40 CFR 763, Section .92(a)(2) and the elements of 29 CFR 1926, Section .1101(k)(9)(viii), in addition to the specific work practices and engineering controls at 29 CFR 1926, Section .1101, and hands-on training.

CERTIFICATE OF WORKER'S ACKNOWLEDGMENT

_____ (5) For OSHA Class IV work: I have completed at least a 2-hr course consistent with EPA requirements for training of local education agency maintenance and custodial staff at 40 CFR 763, (a)(1), and the elements of 29 CFR 1926, Section .1101(k)(9)(viii), in addition to the specific work practices and engineering controls at 29 CFR 1926, Section .1101(g) and hands-on training.

_____ c. Workers, Supervisors and the Designated Competent Person: I have completed annual refresher training as required by EPA's MAP that meets this State's requirements.

PROJECT SPECIFIC TRAINING:
_____ I have been provided and have completed the project specific training required by this Contract. My employer's Designated Industrial Hygienist and Designated Competent Person conducted the training.

RESPIRATORY PROTECTION:
_____ I have been trained in accordance with the criteria in the Contractor's Respiratory Protection program. I have been trained in the dangers of handling and breathing asbestos dust and in the proper work procedures and use and limitations of the respirator(s) I will wear. I have been trained in and will abide by the facial hair and contact lens use policy of my employer.

RESPIRATOR FIT-TEST TRAINING:
_____ I have been trained in the proper selection, fit, use, care, cleaning,maintenance, and storage of the respirator(s) that I will wear. I have been fit-tested in accordance with the criteria in the Contractor's Respiratory Program and have received a satisfactory fit. I have been assigned my individual respirator. I have been taught how to properly perform positive and negative pressure fit-check upon donning negative pressure respirators each time.

MEDICAL EXAMINATION:
_____ I have had a medical examination within the last twelve months which was paid for by my employer. The examination included: health history, pulmonary function tests, and may have included an evaluation of a chest x-ray. A physician made a determination regarding my physical capacity to perform work tasks on the project while wearing personal protective equipment including a respirator. I was personally provided a copy and informed of the results of that examination. My employer's Industrial Hygienist evaluated the medical certification provided by the physician and checked the appropriate blank below. The physician determined that there:

_____ were no limitations to performing the required work tasks.
_____ were identified physical limitations to performing the required work tasks.

Date of the medical examination _____

Employee Signature _____ date _____
Contractor's Industrial
Hygienist Signature _____ date _____

-- End of Section --

Part 2, Setup Details

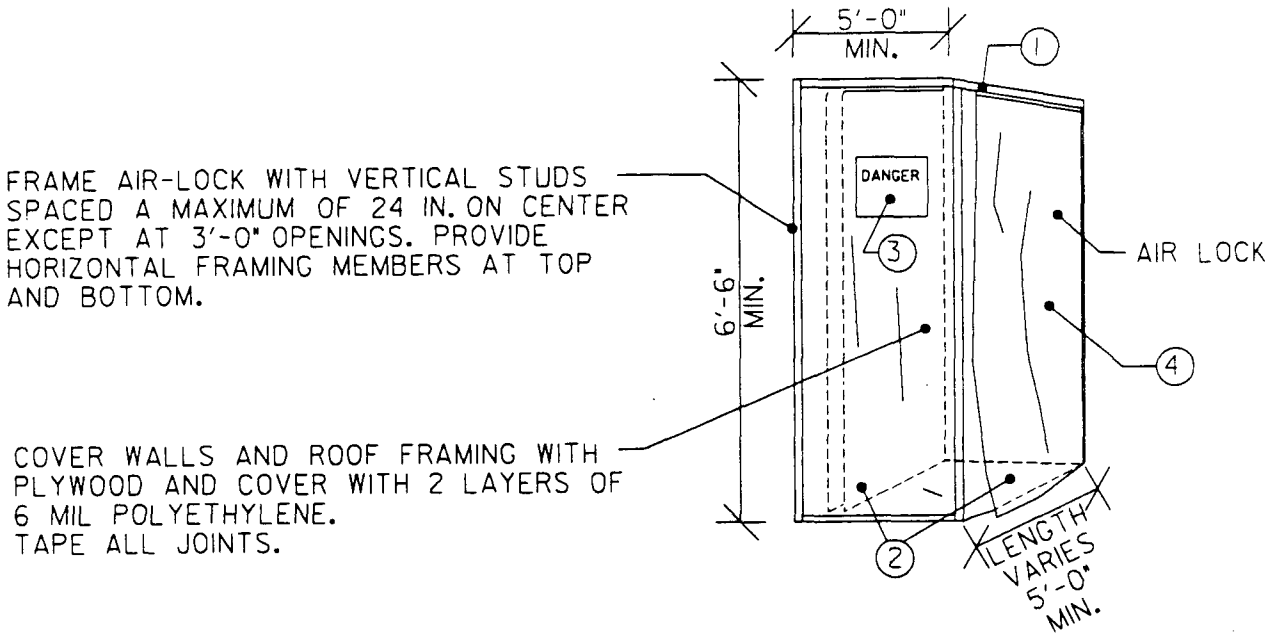

Air lock

1. Establish work area so that unauthorized entry is prevented; see sheet 11. Construct a wood frame. Install one layer of 6-mil polyethylene sheeting to structural members and two layers to the floor. Seal all edges of sheeting to wall, ceiling, and floor surfaces with duct tape.

2. Install triple flaps of 6-mil polyethylene sheeting at both doorways.

3. Install danger signs on each side of air lock area; see sheet 11.

4. Before leaving work area, remove outer suit. Place in a plastic bag; see sheet 9.

5. Enter air lock. Wet wipe respirator and wash hands with clean water from portable sprayer. Remove respirator, and place in a clean plastic bag. Proceed to shower, where inner suit may be removed.

Final clearance requirements. After abatement is completed, prepare area for final clearance. Contractor and Contracting Officer will certify visual inspection of work area on sheet 19, *Certification of Final Cleaning and Visual Inspection.* Contract designee(s) will conduct final air-clearance monitoring as required by the contract. Remove containment area upon instructions from the Contracting Officer, and treat as asbestos-contaminated material; see sheets 9 and 14.

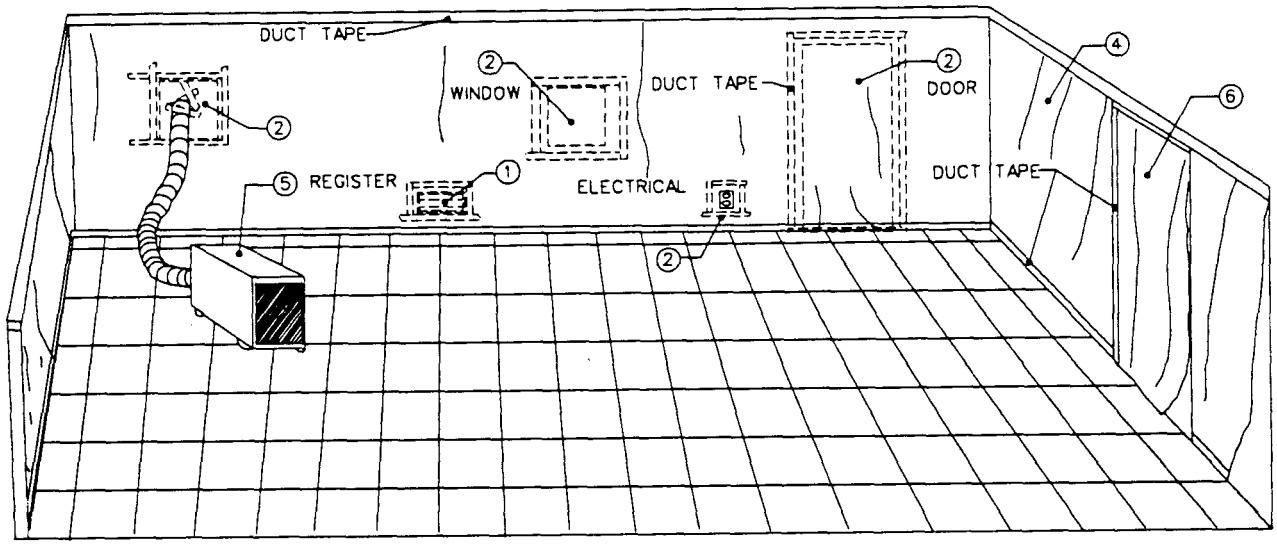

Installation of critical barrier and full containment area (for vinyl tile floors)

1. Establish work area so that unauthorized entry is prevented; see sheet 11. Eliminate airflow into containment area by isolating all supply and return air ducts from mechanical system. Lock doors and windows not required for access.

2. Install 6-mil polyethylene critical barriers over all windows, doors, wall openings, electrical outlets, etc. Secure with duct tape on all sides. HEPA vacuum furniture, fixtures, and equipment and remove from or protect in containment area, as specified by the contract.

3. Prepare area as follows: turn off electrical power and remove light fixtures. Protect ceiling as required. HEPA vacuum floors and walls.

4. Protect wall surface with 6-mil polyethylene from floor to ceiling. Install viewing inspection windows, where feasible.

5. Install HEPA filter unit and duct work; see sheet 8.

6. Prepare door into decontamination unit or load-out unit; see sheet 22 for decontamination unit and sheet 20 for load-out unit. Doors that swing into the work area must be removed from hinges.

Final clearance requirements. After abatement has been completed, see sheet 18 for final clearance requirements.

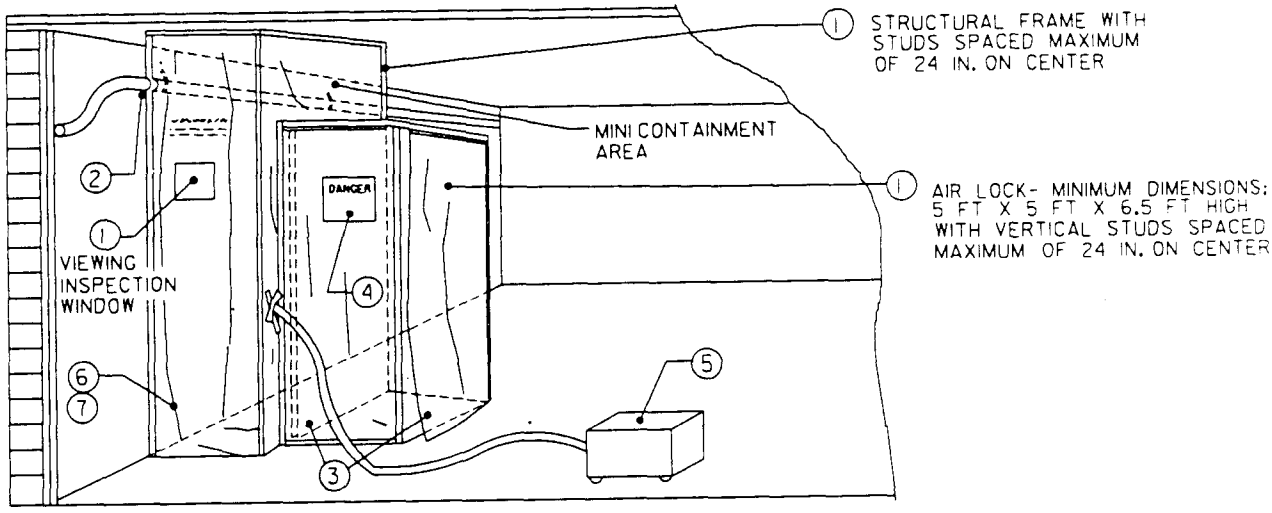

Mini-containment area

1. Establish work area so that unauthorized entry is prevented; see sheet 11. Construct a two-compartment wood frame around work area; install one layer 6-mil polyethylene sheeting to structural members and two layers 6-mil polyethylene sheeting to the floor. Seal all edges to wall, ceiling, and floor surfaces with duct tape. Install viewing inspection windows, where feasible.

2. Seal with duct tape all penetrations (typical) such as pipes, electrical conduit, or ducts.

3. Install triple 6-mil polyethylene flaps at both doorways. Place portable sprayer with clean water, disposable towels, and prelabeled disposal bag in air lock.

4. Install danger signs on outside of containment area. See sheet 11.

5. Install HEPA vacuum; extend hose into mini-containment area for general vacuuming, negative air, and cleaning of disposable suit.

6. Accumulate all loose materials for disposal. Place in approved container; see sheet 9. Apply labels; see sheet 14. Adequately wet clean all wall, floor, tool, and equipment surfaces.

7. Abatement worker must wear two disposable suits. Remove outer suit in work area and place in a plastic bag; see sheet 9. Enter air lock.

8. In air lock, wet wipe respirator and wash hands with clean water. Remove respirator and place in a clean plastic bag. Proceed to remote shower unit where inner suit may be removed.

Final clearance requirements. After abatement is completed, prepare area for final clearance. Contractor and Contracting Officer will certify visual inspection of work area on sheet 19, *Certification of Final Cleaning and Visual Inspection*. Contractor will apply lockdown encapsulant. Contract designee(s) will conduct final air-clearance monitoring as required by the contract. Remove containment area upon instructions from the Contracting Officer, and treat it as asbestos- contaminated material. Place in approved container; see sheet 9. Apply labels, see sheet 14. Dispose of as specified in the contract.

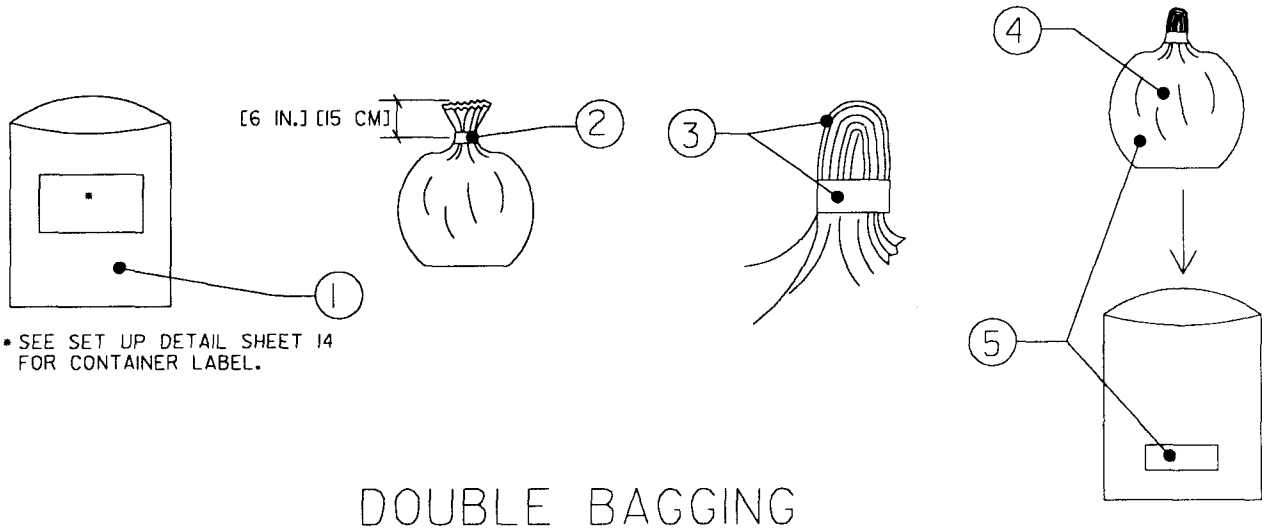

DOUBLE BAGGING

Containers—double bagging

1. Place the still-wet asbestos-containing and asbestos-contaminated material into a prelabled 6-mil polyethylene bag. Do not overfill. Do not use bag for asbestos-containing or asbestos-contaminated material that could puncture the bag. (See sheet 9C for packaging items that could puncture bags.)

2. Evacuate with HEPA vacuum, and seal collapsed bag by twisting top [6 in] [15 cm] closed and wrapping with a minimum of two layers of duct tape.

3. Twist top and fold over. Apply second wrap of duct tape.

4. Adequately wet clean outside of disposal bag by wet wiping, and take bag to the equipment and staging area.

5. Place bag inside a second prelabled 6-mil polyethylene bag.

6. Seal outer bag by repeating steps 2 and 3 above. Take bag to load-out unit; see sheet 20.

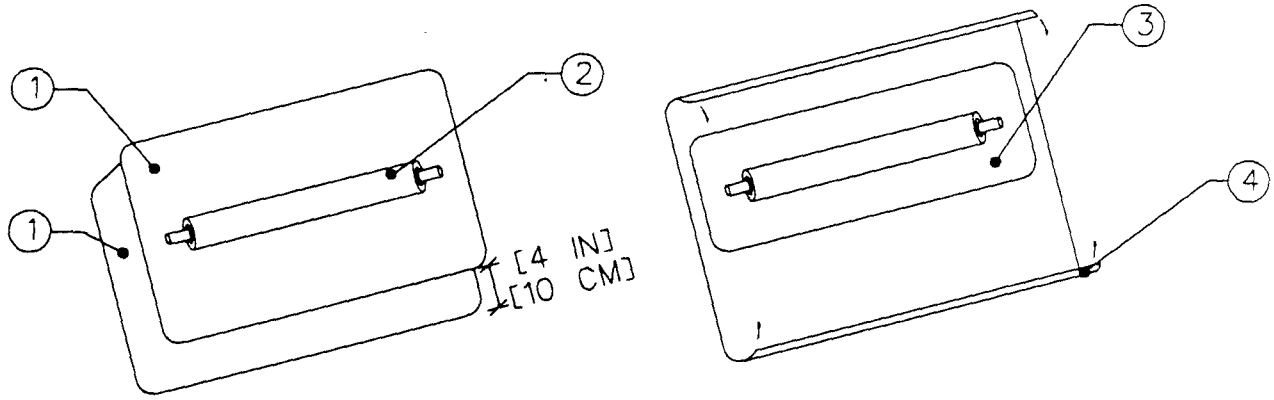

Containers—leak-tight wrapping

1. Place two layers of 6-mil polyethylene sheet on surface so that the bottom layer is offset [4 in] [10 cm] from the top layer.

2. Place the still-wet asbestos-containing or asbestos-contaminated material that is too large (boiler, vessel, pipe segment, etc.) to be placed in disposal bags on the top layer of polyethylene.

3. Wrap the top layer tightly around the contaminated material. Seal all edges of the top layer of sheeting with duct tape. Apply labels; see sheet 14.

4. Repeat procedure with bottom layer, including labeling. Take to load-out unit; see sheet 20.

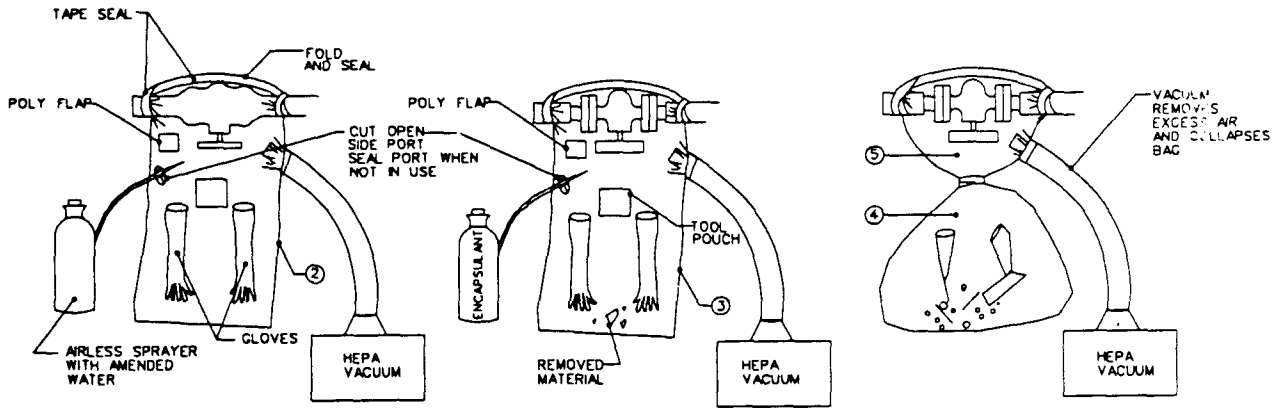

Glove bag

1. Construct modified containment area in accordance with sheet 21. NOTE: Inspect for structural integrity the insulation material adjacent to section being removed, since glove bag removal procedure is not appropriate if it will cause asbestos fiber release from adjacent asbestos-containing material.

2. Put tools and rags inside glove bag. Insulation adjacent to the asbestos-containing material being removed must be adequately wet cleaned and sprayed with an encapsulant before placing glove bag over the area to be removed. Install glove bag according to manufacturer's instructions. (NOTE: Negative-air glove bags may be used if first approved by Contracting Officer. Manufacturer procedures for negative-air glove bags will vary from procedures identified on this sheet.) Install HEPA filter vacuum cleaner with hose ducted into bag. Seal with duct tape. Smoke test for leaks. Soak insulation with amended water.

3. Remove insulation and clean exposed metal surfaces. Encapsulate exposed ends of insulation and metal surfaces. Adequately wet clean glove bag surfaces to below tool pouch.

4. Grasp tools in pouch and withdraw by pulling glove inside out. Twist glove above encased tools to create a constriction, and tape constricted area with duct tape. Cut through middle of taped area so that tools and glove bag will both remain sealed. Place encased tools into tool pouch of next glove bag or decontaminate by water immersion.

5. Evacuate glove bag, using HEPA vacuum. Twist bag to create a constriction below tool pouch. Wrap constricted area with duct tape. Cut bag [4 in] [10 cm] above constriction. Double bag cut off portion of bag; see sheet 9. Apply labels; see sheet 14. Cap and seal end of HEPA vacuum hose in order to prevent incidental fiber release.

6. Remove remaining portion of glove bag. Place in approved container; see sheet 9. Apply labels; see sheet 14. Dispose as asbestos-contaminated waste.

Final clearance requirements. For final clearance, Contractor and Contracting Officer will certify visual inspection of work area on sheet 19, *Certification of Final Cleaning and Visual Inspection*. Contract designee(s) will conduct final air-clearance monitoring as required by the contract.

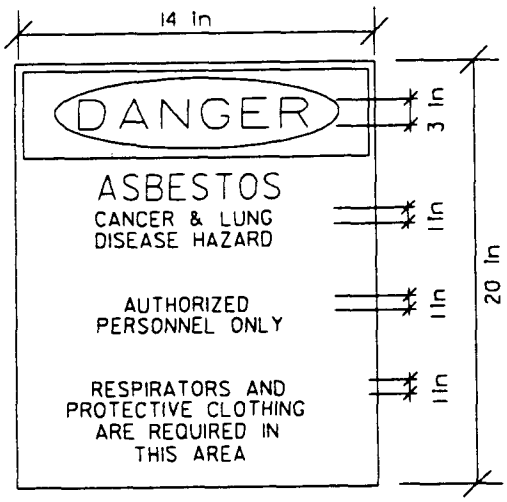

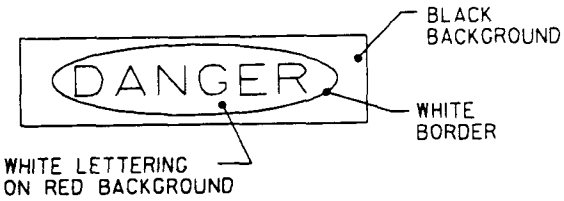

AREA WARNING SIGNS AND WARNING TAPE

DETAIL 011

Area warning signs and warning tape

1. Provide and install [4 mil] [0.10 mm] polyethylene warning tape at locations shown on the abatement area plan.

2. Warning tape is to be attached to wood or metal posts at [10 ft] [300 cm] on center. Tape must be [3 ft] [100 cm] from ground.

3. Attach both warning signs at each entrance of the work area and at [33 yd] [30 m] on center where security fencing is installed.

4. Warning signs must be in English and other languages required by the contract.

5. Install at eye level.

FIBER CONCENTRATION	MINIMUM REQUIRED RESPIRATOR	
NOT IN EXCESS OF 1 FIBER/CC	HALF-MASK AIR PURIFYING RESPIRATOR WITH HEPA FILTERS	
NOT IN EXCESS OF 5 FIBERS/CC	FULL FACEPIECE AIR-PURIFYING RESPIRATOR WITH HEPA FILTERS	
NOT IN EXCESS OF 10 FIBERS/CC	LOOSE FITTING HELMET OR HOOD, POWERED AIR-PURIFYING RESPIRATOR WITH HEPA FILTERS	
NOT IN EXCESS OF 10 FIBERS/CC	POWERED AIR-PURIFYING RESPIRATOR WITH FULL FACEPIECE AND HEPA FILTER	
NOT IN EXCESS OF 10 FIBERS/CC	LOOSE FITTING HELMET OR HOOD, SUPPLIED AIR RESPIRATOR OPERATED IN CONTINUOUS FLOW MODE WITH BACK-UP HEPA FILTER	
NOT IN EXCESS OF 10 FIBERS/CC	SUPPLIED AIR RESPIRATOR WITH FULL FACEPIECE OPERATED IN CONTINUOUS FLOW MODE WITH BACK-UP HEPA FILTER	
NOT IN EXCESS OF 100 FIBERS/CC	FULL FACEPIECE SUPPLIED AIR RESPIRATOR OPERATED IN PRESSURE-DEMAND MODE WITH BACK-UP HEPA FILTER	
GREATER THAN 100 FIBERS/CC OR UNKNOWN CONCENTRATION	FULL FACEPIECE SUPPLIED-AIR RESPIRATOR OPERATED IN PRESSURE-DEMAND MODE WITH AUXILIARY POSITIVE-PRESSURE SELF-CONTAINED BREATHING APPARATUS	

Respiratory protection table

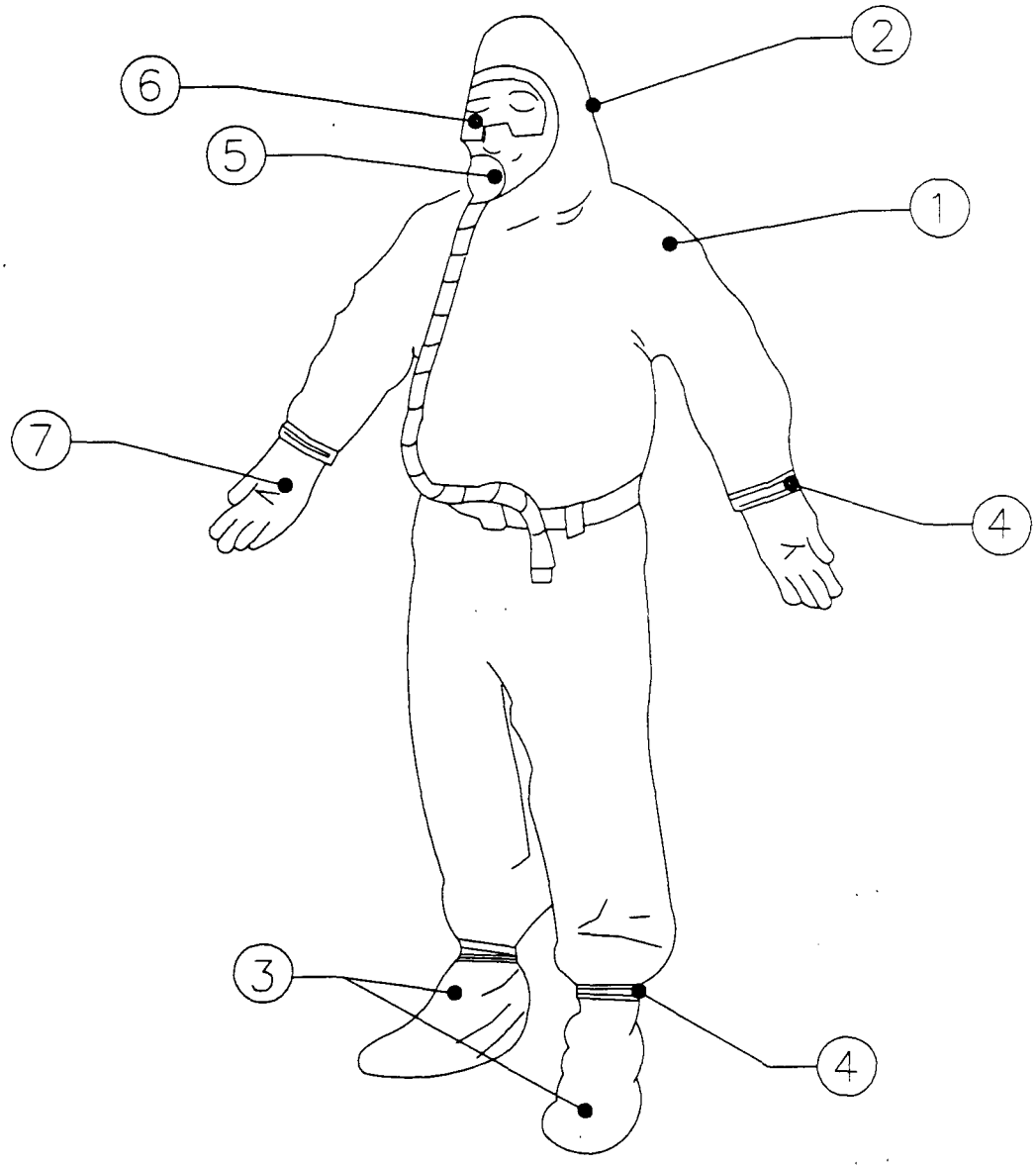

Protective clothing

1. Disposable or reusable full body suit with elastic around hood and shoe cover openings is required or as otherwise specified in the contract.

2. Hood shall be worn over respirator's head and neck straps.

3. Shoe covers shall be worn over work shoes.

4. Cuffs shall be taped with duct tape at wrists and ankles in order to prevent infiltration.

5. Cartridge-type air-purifying HEPA filter respirator is minimal requirement. Type shall be selected in accordance with sheet 12.

6. If eye protection is not integral with respirator, protection goggles are required.

7. Rubber work gloves are recommended to be worn alone or under outer work gloves provided for hand and operation safety.

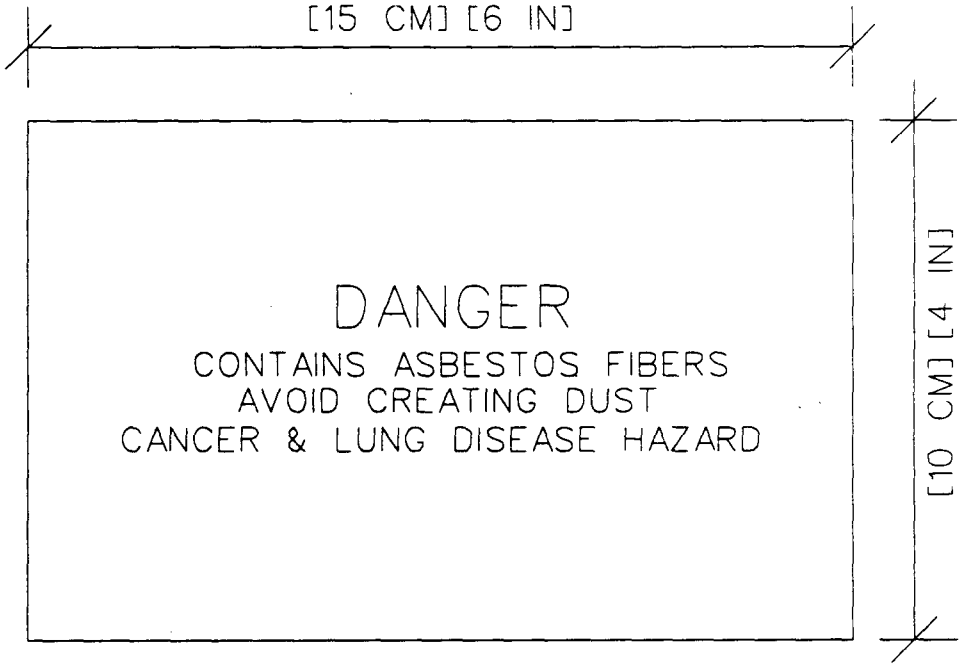

Disposal container label

Attach warning labels to each disposal container removed from abatement area.

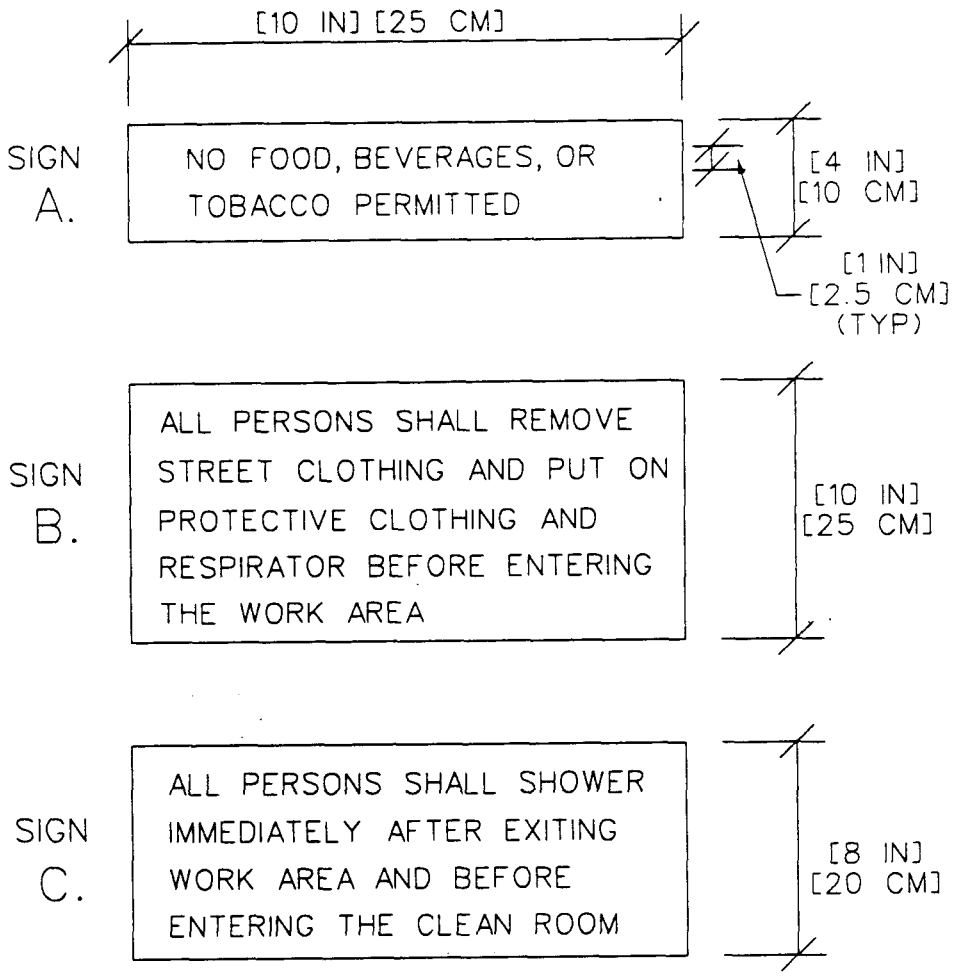

Decontamination unit signage

1. Provide signs in English and other languages required by the contract.

2. Install at eye level.

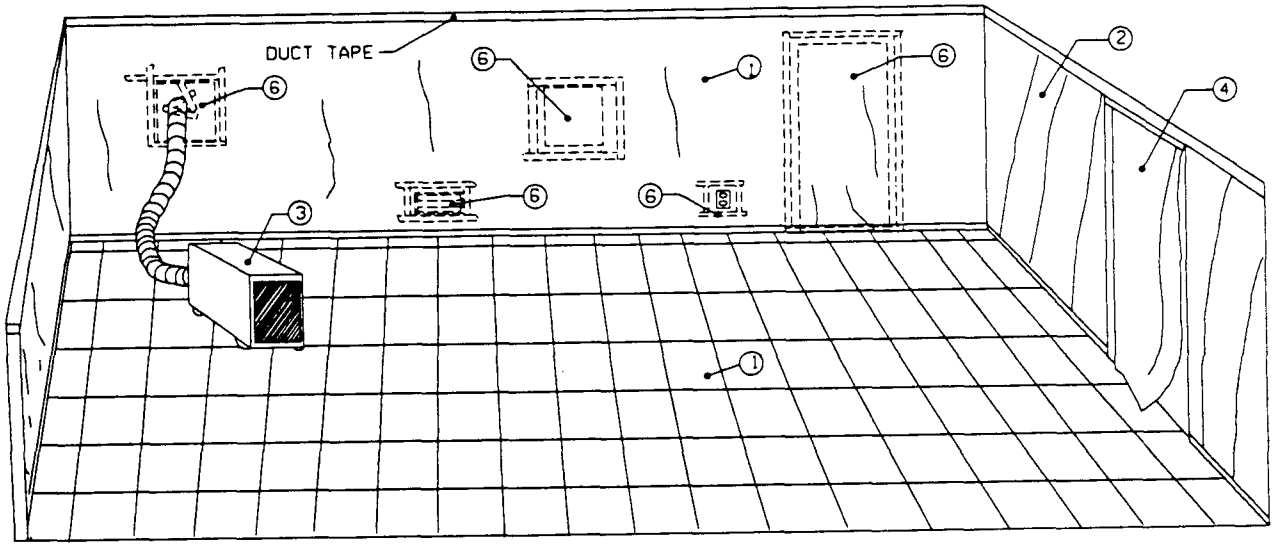

Preparation of containment area for final clearance (for vinyl tile floors)

1. Accumulate all loose material for disposal; see sheet 9. Apply labels; see sheet 14. Adequately wet clean all wall, floor, and equipment surfaces.

2. Contractor and contracting officer will certify visual inspection of work area on sheet 19, *Certification of Final Clearing and Visual Inspection.*

3. Apply lockdown encapsulant.

4. Remove polyethylene from walls. Critical barriers sealing all windows, doors, wall openings, electrical outlets, etc., are to remain. Remove any temporary equipment enclosures used; see sheet 24. Treat polyethylene as asbestos-contaminated material. Place in approved container; see sheet 9 for leak-tight wrapping. Apply labels; see sheet 14.

5. HEPA filter unit remains in place and operating.

6. Door into decontamination unit or load-out room remains.

7. Prepare area for final clearance.

8. Contractor and Contracting Officer will recertify visual inspection of work area on sheet 19, *Certification of Final Cleaning and Visual Inspection.*

9. Contract designee(s) will conduct final air-clearance monitoring as required by the contract.

10. Upon instruction from Contracting Officer, shut down HEPA filter ventilation system, detach duct work, move system to equipment room of decontamination unit, clear and dispose of waste; see sheet 8. Remove critical barrier and place in approved container; see sheet 9. Apply labels; see sheet 14. Dispose of waste as asbestos-contaminated material.

Certification of Final Cleaning And Visual Inspection

Individual abatement task as identified in paragraph, Description of Work _____

In accordance with the cleaning and decontamination procedures specified in the Contractor's asbestos hazard abatement plan and this contract, the Contractor hereby certifies that he/she has thoroughly visually inspected the decontaminated regulated work area (all surfaces, including pipes, beams, ledges, walls, ceiling, floor, decontamination unit, etc.) in accordance with ASTM E1368, *Standard Practice for Visual Inspection of Asbestos Abatement Projects*, and has found no dust, debris, or asbestos-containing material residue.

BY: (Contractor's signature) _____ Date _____

Print name and title _____

(Contractor's Onsite Supervisor signature) _____ Date _____

Print name and title _____

(Contractor's Industrial Hygienist signature) _____ Date _____

Print name and title _____

Contracting Officer Acceptance or Rejection

The Contracting Officer hereby determines that the Contractor has performed final cleaning and visual inspection of the decontaminated regulated work area (all surfaces including pipes, beams, ledges, walls, ceiling, floor, decontamination unit, etc.) and by quality assurance inspection, finds the Contractor's final cleaning to be:

☐ Acceptable

☐ Unacceptable, Contractor instructed to reclean the regulated work area.

BY: Contracting Officer's Representative

Signature _____ Date _____

Print name and title _____

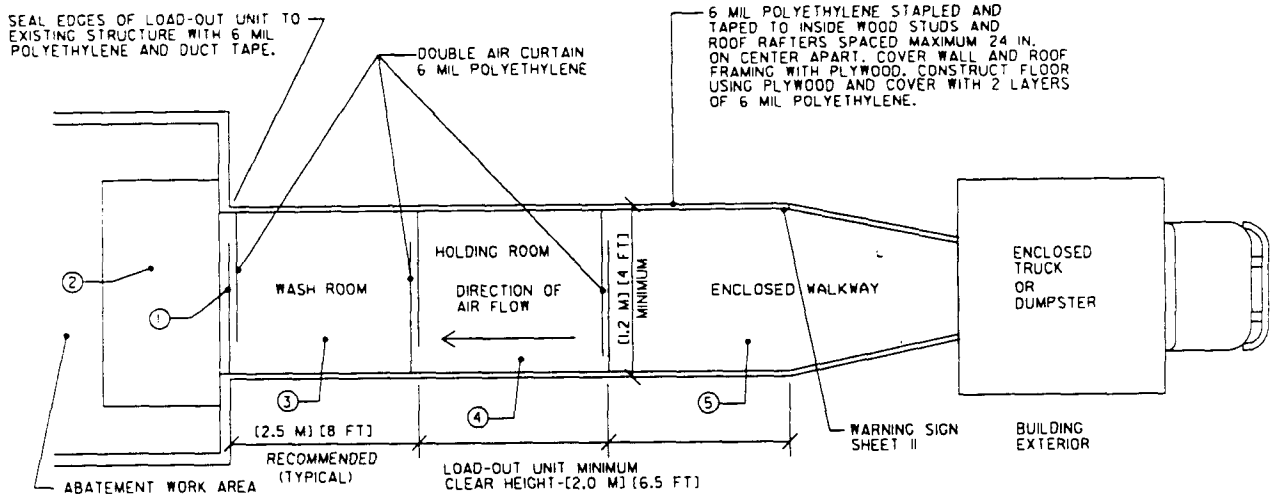

Load-out unit floor plan

1. Abatement worker is to enter and exit abatement work area only through decontamination unit.

2. Place additional 6-mil polyethylene sheeting on top of abatement area floor. Double bag asbestos-contaminated material in this area before removing.

3. Wet wipe bags, equipment, and containers, and take to holding room.

4. Stage clean bags, equipment, and containers in holding room until disposal worker removes them.

5. Disposal workers, wearing full protective clothing and appropriate respirator protection, carry decontaminated bags and containers through enclosed walkway and into enclosed truck or Dumpster.

Final clearance requirements. Before breaking down load-out unit, adequately wet clean and HEPA vacuum all surfaces and prepare area for final clearance. Contractor and Contracting Officer will certify visual inspection of work area on sheet 19, *Certification of Final Cleaning and Visual Inspection*. Contractor will apply lockdown encapsulant. Contract designee(s) will conduct final air-clearance monitoring as required by the contract. Breakdown load-out area upon instructions from Contracting Officer. Treat as asbestos- contaminated material. Place in approved container; see sheet 9. Apply labels; see sheet 14. Dispose of as required by the contract.

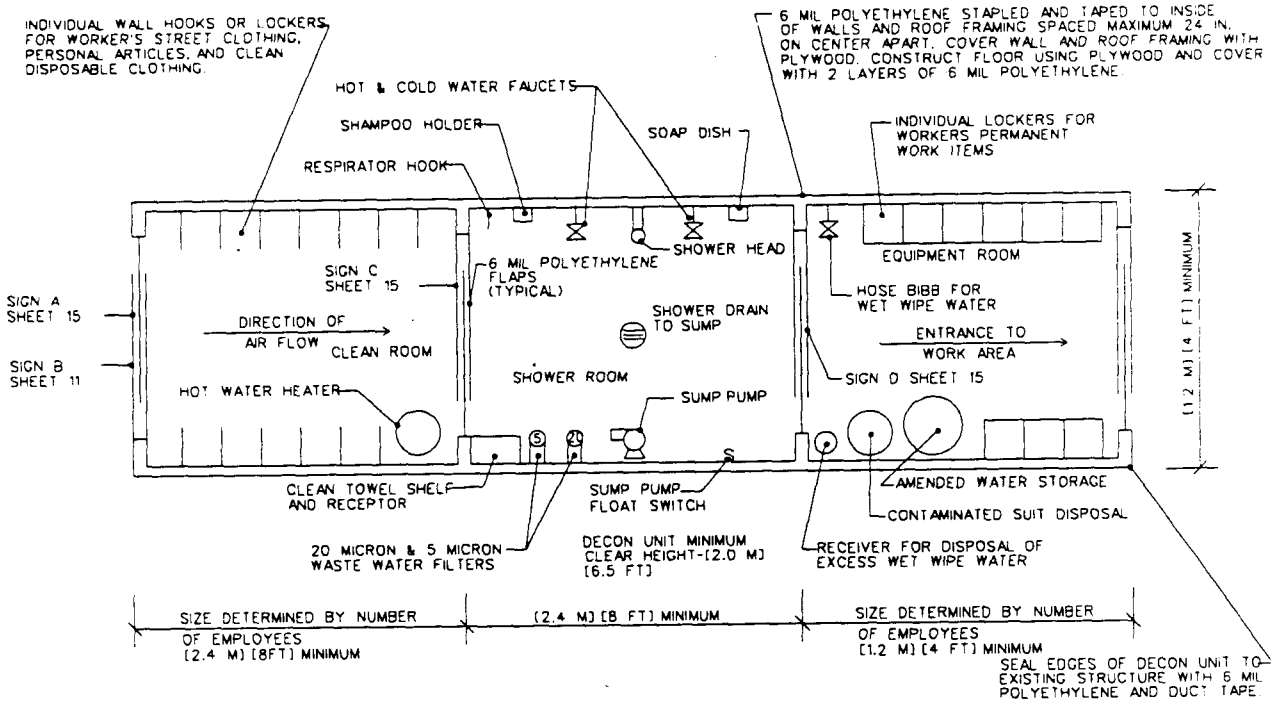

Decontamination unit floor plan

1. Establish work area so that unauthorized entry is prevented; see sheets 11 and 15. Before entering the work area, all personnel shall remove their street clothing in the clean room and put on protective clothing and respirator.

2. Whenever exiting the work area, all personnel shall:

- Vacuum clothing and shoes outside equipment room.
- Remove all clothing and equipment (except respirator) in equipment room.
- Store work shoes and equipment in locker.
- With respirator still on, shower thoroughly, including hair. Then remove respirator and finish shower.
- Proceed to clean room and put on street clothes.

3. See sheet 23 for minimum plumbing requirements, including wastewater filtration. Ensure that plumbing and specified filter size meet local requirements.

4. Twice daily, or more often if necessary, and before breaking down decontamination unit after abatement, adequately wet clean and HEPA vacuum all wall, floor, equipment, and other surfaces. Waste collected in shower room and equipment room shall be treated as asbestos-contaminated material. Place in approved container; see sheet 9. Apply labels; see sheet 14.

5. Prepare for final clearance.

Final clearance requirements. Contractor and Contracting Officer will certify visual inspection of work area on sheet 19, *Certification of Final Cleaning and Visual Inspection.* Contract designee(s) will conduct final air-clearance monitoring as required by the contract. If the unit is not a prefabricated decontamination unit, apply lockdown encapsulant before final air-clearance monitoring. After approval of final air clearance, break down and treat polyethylene as asbestos-contaminated material. Place in approved container; see sheet 9. Apply labels; see sheet 14. Dispose of as required by the contract.

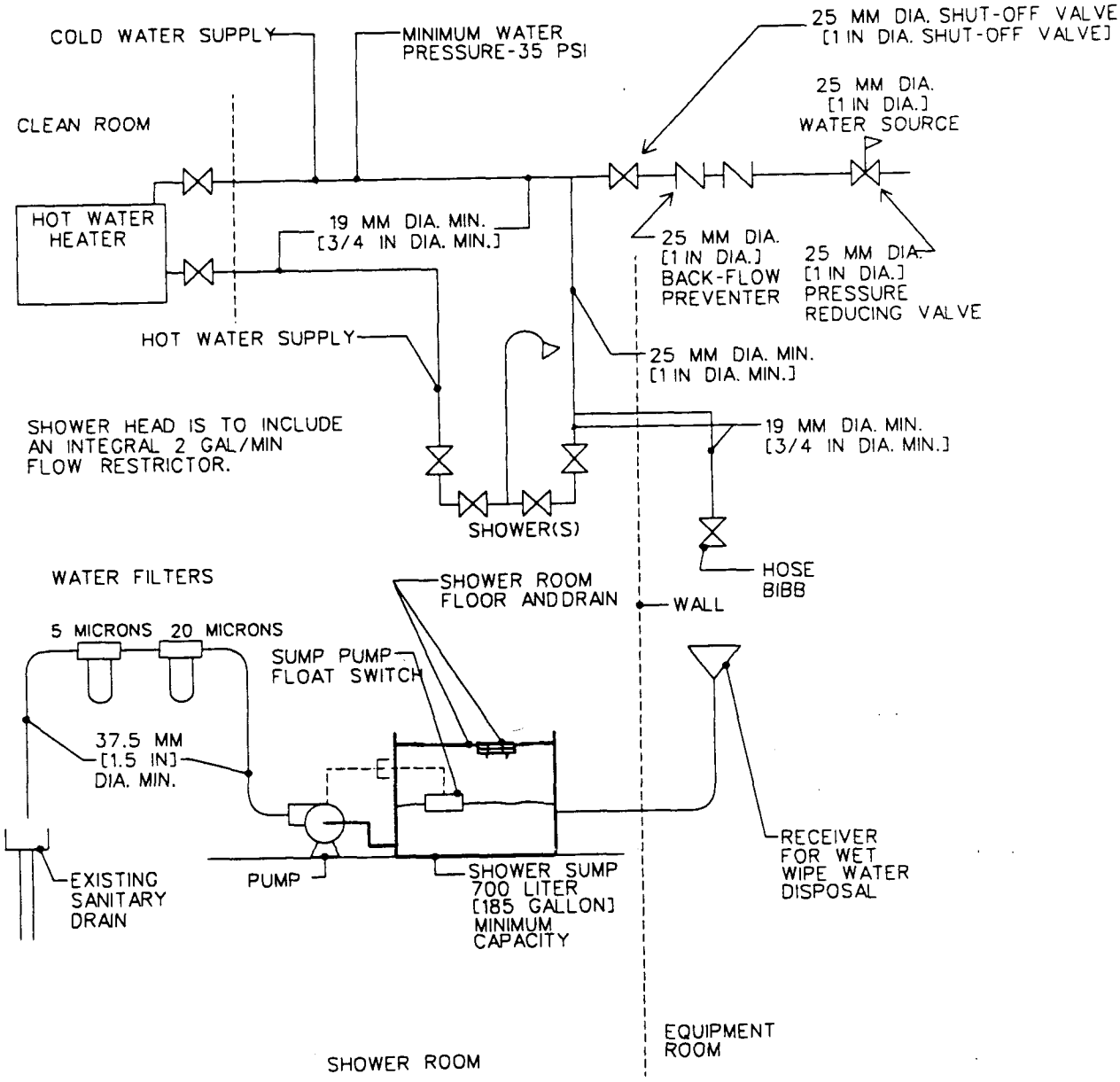

SIZE CAPACITY OF SUMP PUMP FOR TWICE THE EXPECTED WASTE WATER FLOW.

Decontamination unit piping details

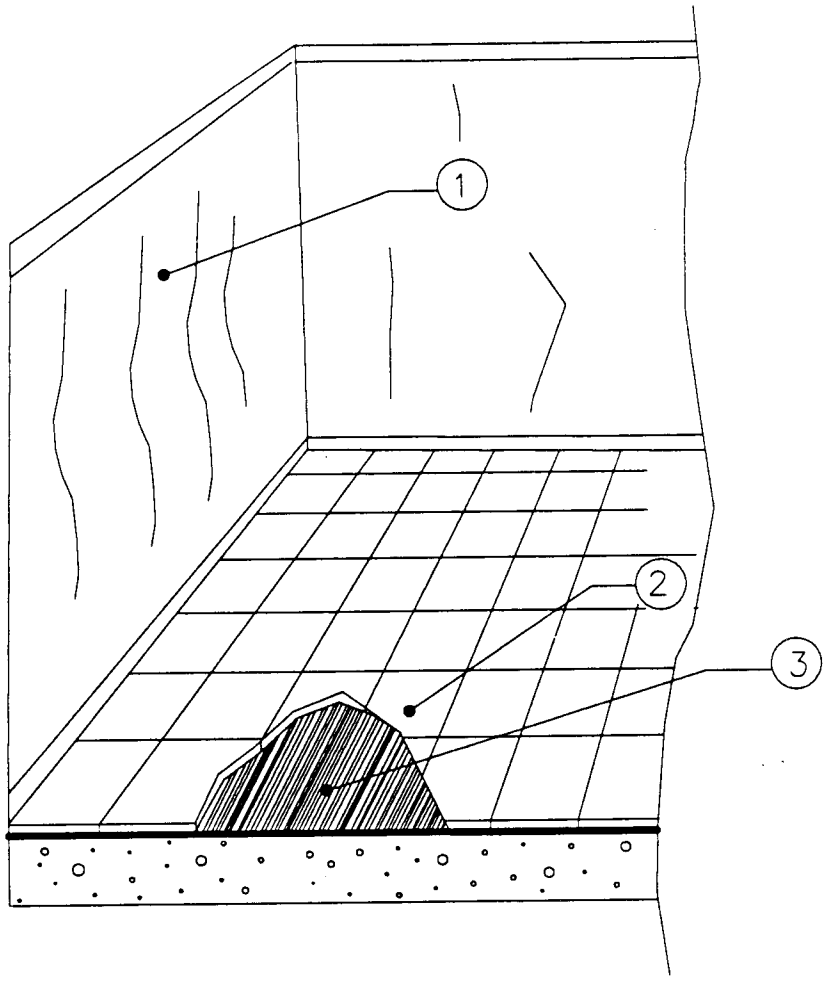

Removal of vinyl asbestos tile adhered to concrete floor system by asbestos-containing adhesive

1. Prepare containment area as specified on sheet 21. NOTE: Where full containment area is required, follow instructions on sheet 4, except omit polyethylene on floor.

2. Lightly flood asbestos tile with amended water, and let soak for 48 hours. Remove asbestos tile and adhesive while they are wet in order to prevent asbestos fiber release. Place tile and adhesive into an approved container; see sheet 9. Apply labels; see sheet 14.

3. Clean, HEPA vacuum, and wet wipe all surfaces.

4. Inspect and reclean area as necessary.

5. Prepare area for final air clearance.

6. Carry out final clearance requirements as specified on applicable sheet 18 or 21.

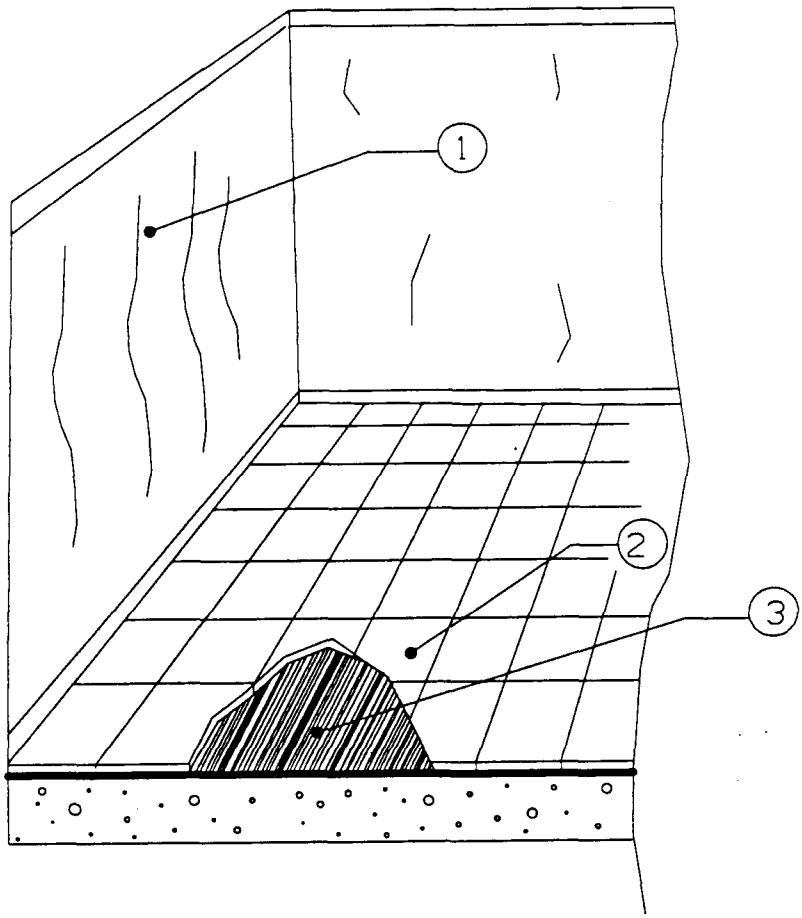

Removal of vinyl asbestos tile adhered to concrete floor system by asbestos-free adhesive

1. Prepare containment area as specified on sheet 21. NOTE: Where full containment area is required, follow instructions on sheet 4, except omit polyethylene on floor.

2. Lightly flood asbestos tile, and soak for 48 hours. Remove asbestos tile and adhesive while they are wet in order to prevent asbestos fiber release. Place tile and adhesive into an approved container; see sheet 9. Apply labels; see sheet 14.

3. Clean, HEPA vacuum, and adequately wet clean all surfaces.

4. Inspect and reclean area as necessary.

5. Prepare area for final air clearance.

6. Carry out final clearance requirements as specified on applicable sheet 18 or 21.

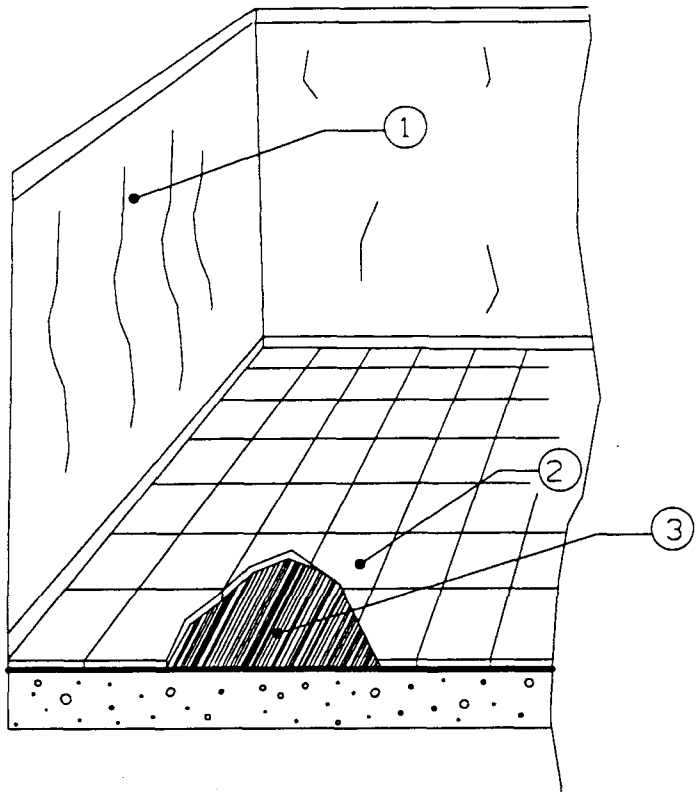

USE THIS DETAIL ONLY FOR
- SMALL SCALE PROJECTS
- GROUND FLOOR APPLICATIONS

Removal of vinyl asbestos tile and chemical dissolution of asbestos-containing adhesives on concrete floor system

1. Prepare containment area as specified on sheet 4.

2. Lightly flood asbestos tile, and soak for 48 hours. Remove asbestos tile and adhesive while they are wet in order to prevent asbestos fiber release. Place tile and adhesive into an approved container; see sheet 9. Apply labels; see sheet 14.

3. Before removing adhesive, increase ventilation rate to 10 air changes per hour. Air must be exhausted outside building.

4. Apply liquid adhesive remover. As soon as the adhesive is soft enough to scrape, remove and put into approved container; see sheet 9. Apply labels; see sheet 14.

5. Prepare area for final air clearance.

6. Carry out final clearance requirements as specified on sheet 18.

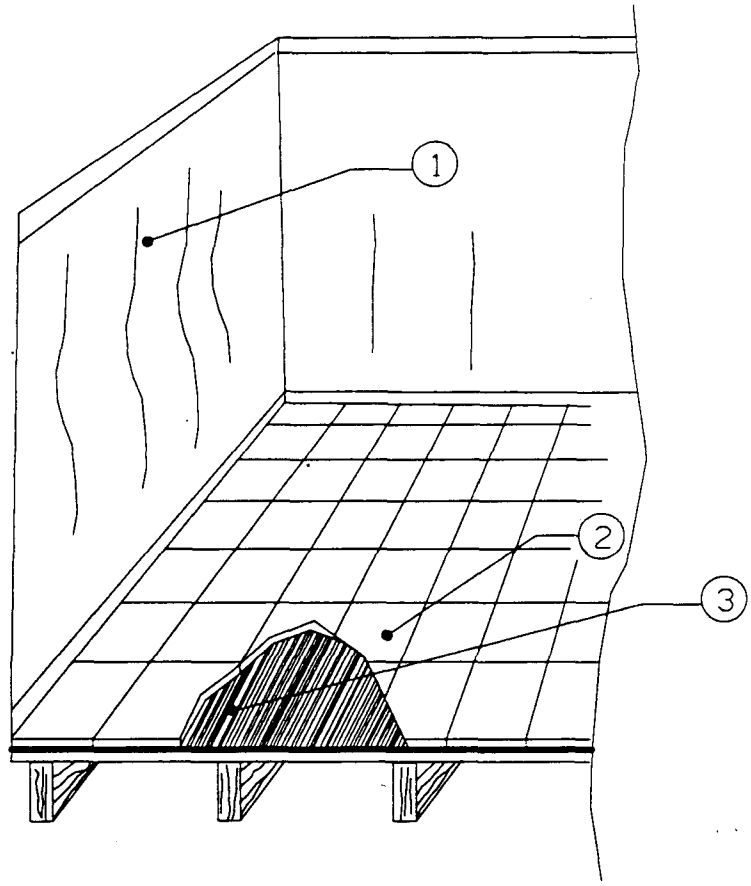

Removal of vinyl asbestos tile adhered to wood floor system by asbestos-containing adhesive

1. Prepare containment area as specified on sheet 21, except omit polyethylene on floor. NOTE: Where full containment is required, follow instructions on sheet 4.

2. Where wood flooring is to remain, adequately wet and remove asbestos tile and adhesive in order to prevent asbestos fiber release. Place tile and adhesive into an approved container; see sheet 9. Apply labels; see sheet 14. Note: Where wood flooring is to be removed, adequately wet and remove existing wood flooring. Treat as asbestos-contaminated material. Spread a plastic sheet on the floor, and stack removed wood flooring onto two layers of 6-mil polyethylene. Wrap each polyethylene layer around the stack, sealing all joints and edges with duct tape; see sheet 9. Apply labels to stack; see sheet 14. Smaller material will be placed in approved container; see sheet 9. Apply labels; see sheet 14.

3. Clean, HEPA vacuum, and adequately wet clean all surfaces.

4. Inspect and reclean area as necessary.

5. Prepare area for final air clearance.

6. Carry out final clearance requirements specified in applicable sheet 18 or 21.

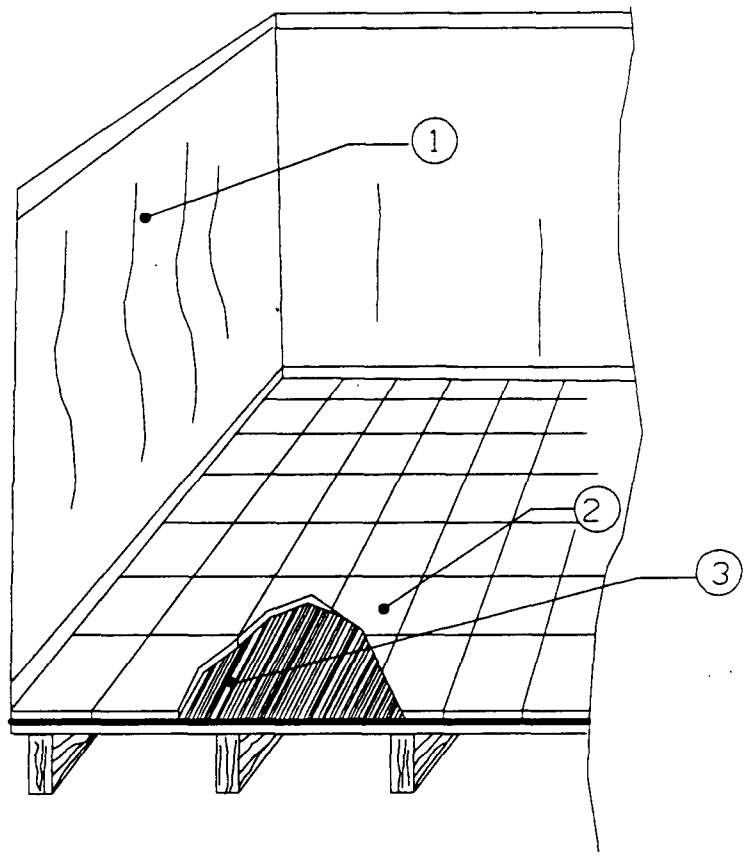

Removal of vinyl asbestos tile adhered to wood floor system by asbestos-free adhesive

1. Prepare containment area as specified on sheet 21. NOTE: Where full containment is required, follow instructions on sheet 4, except omit polyethylene on floor.

2. Adequately wet and remove asbestos tile and adhesive while they are wet in order to prevent asbestos fiber release. Place tile and adhesive into an approved container; see sheet 9. Apply labels; see sheet 14.

3. Clean, HEPA vacuum, and wet wipe all surfaces.

4. Inspect and reclean area as necessary.

5. Prepare area for final air clearance.

6. Carry out final clearance requirements specified on applicable sheet 18 or 21.

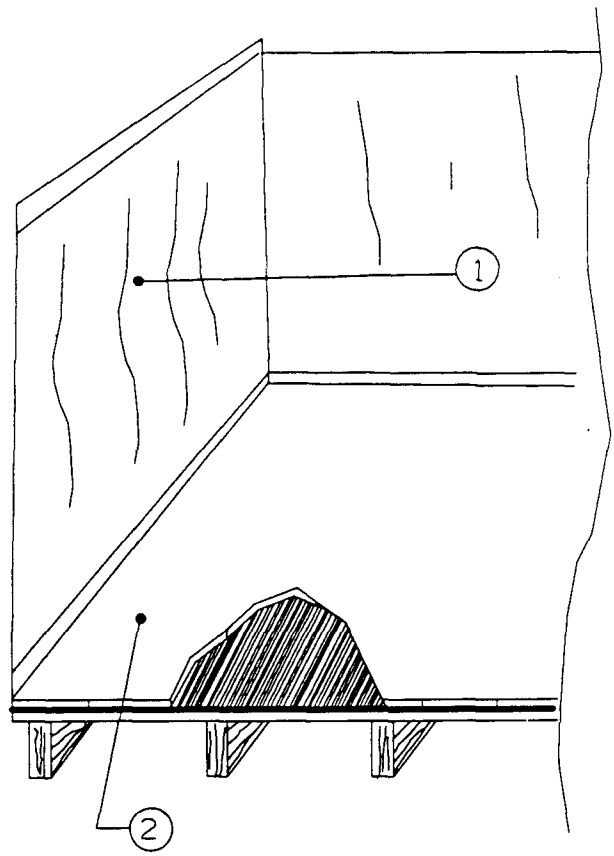

Removal of sheet-flooring adhered to wood floor system

1. Prepare containment area as specified on sheet 21. NOTE: Where full containment is required, follow instructions on sheet 4, except omit polyethylene on floor.

2. Mist exposed surfaces with amended water just before sheet flooring is removed. Remove flooring in manageable pieces and place on two layers of 6-mil polyethylene. Wrap each layer of polyethylene around the stack, sealing all joints and edges with duct tape; see sheet 9. Apply labels; see sheet 14. Place smaller material in approved container; see sheet 9. Apply labels; see sheet 14.

3. Clean, HEPA vacuum, and adequately wet clean all surfaces.

4. Inspect and reclean area as necessary.

5. Prepare area for final air clearance.

6. Carry out final clearance requirements as specified on applicable sheet 18 or 21.

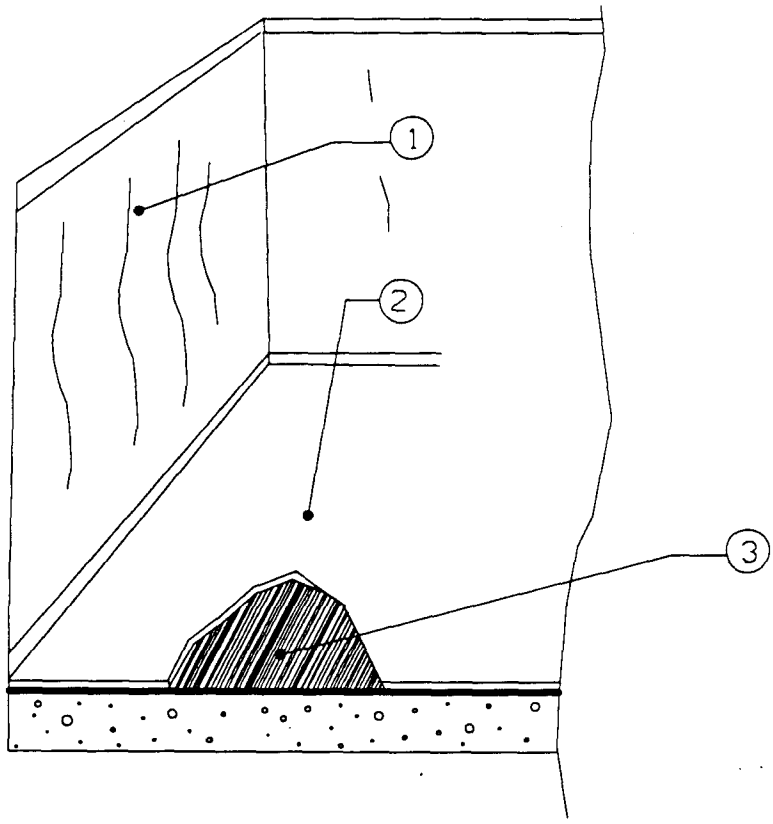

Removal of sheet-flooring adhered to concrete floor system by asbestos-containing adhesive

1. Prepare containment area as specified on sheet 21. NOTE: Where full containment is required, follow instructions on sheet 4, except omit polyethylene on floor.

2. Mist exposed surfaces with amended water just before sheet flooring is removed. Remove flooring in manageable pieces and place on two layers of 6-mil polyethylene. Wrap each layer of polyethylene around the stack, sealing all joints and edges with duct tape; see sheet 9. Apply labels; see sheet 14. Place smaller material in approved container; see sheet 9. Apply labels; see sheet 14.

3. Remove remaining adhesive down to bare concrete. Place in approved container; see sheet 9. Apply labels; see sheet 14.

4. Clean, HEPA vacuum, and wet wipe all surfaces.

5. Inspect and reclean area as necessary.

6. Prepare area for final air clearance.

7. Carry out final clearance requirements specified on applicable sheet 18 or 21.

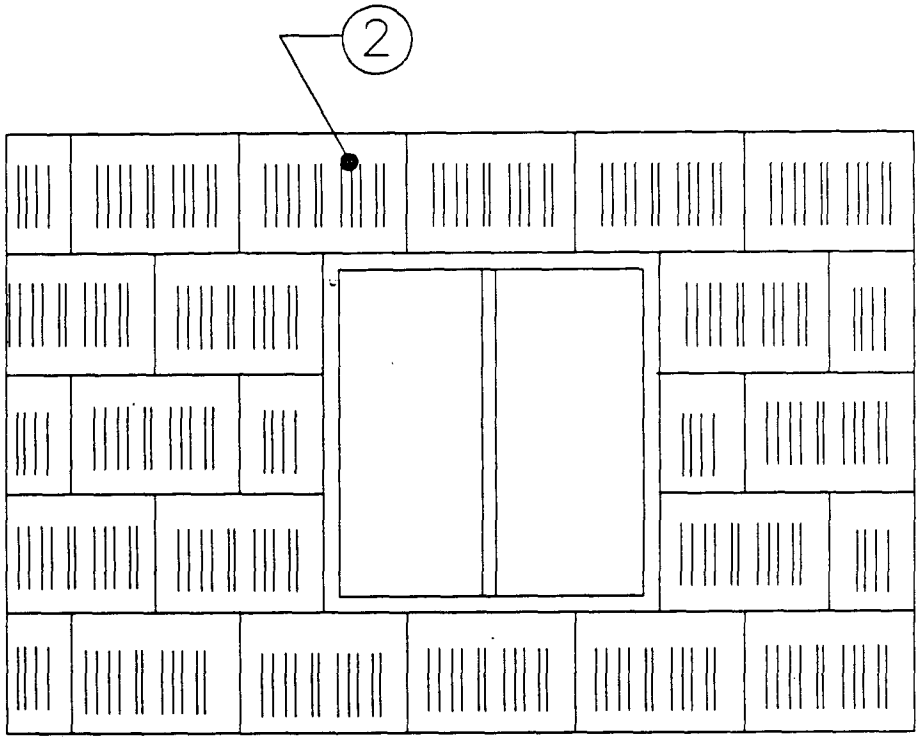

Removal of asbestos cement siding

1. No containment area is required. Establish boundaries of asbestos-regulated work area so that unauthorized entry is prevented; see sheet 11. Provide personal protection and decontamination facilities as specified in contractor's asbestos hazard abatement plan.

2. Wet mist siding with amended water, initially and during removal procedures.

3. Anchor 10-mil polyethylene sheeting below work area. Remove siding in a manner that will prevent crumbling, pulverizing, or reducing to powder during the removal procedure. NOTE: Normal breakage does not constitute crumbling, pulverizing, or reducing to powder.

4. Clean and HEPA vacuum all surfaces.

5. Inspect and reclean area as necessary.

6. Place all materials in Dumpster or other transport container lined with two layers of 6-mil polyethylene. Seal the joints and ends of each layer with duct tape; see sheet 9. Apply labels; see sheet 14. Other containers may be used; see sheet 9. Apply labels; see sheet 14.

7. Prepare area for final clearance.

8. Contractor and contracting officer will certify visual inspection of work area on sheet 19, *Certification of Final Cleaning and Visual Inspection*.

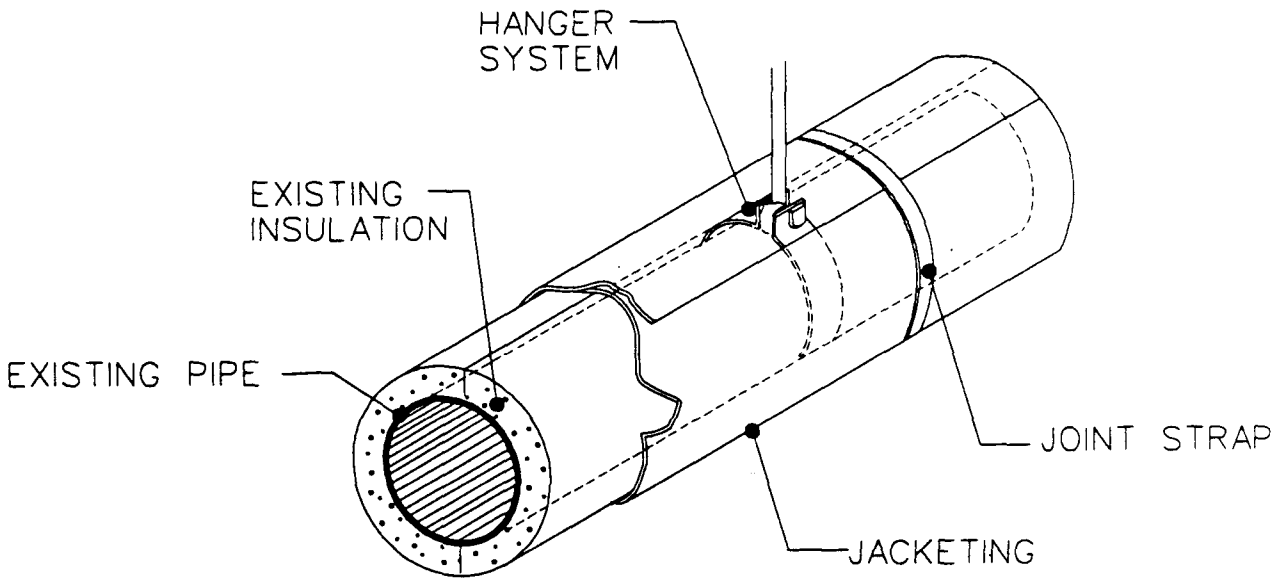

NOTE: THIS SHEET CAN BE USED FOR VERTICAL OR HORIZONTAL PIPING.

Removal of pipe insulation (using glove bag)

1. Install glove bag as specified on sheet 10. Prepare modified containment area as specified on sheet 21. Adequately wet mist insulation surface with amended water, initially and during removal.

2. Remove jacketing and asbestos pipe insulation from pipe and hanger to within 2 inches of inside edges of glove bag.

3. Clean exposed surfaces by spraying with amended water and brushing.

4. Inspect and reclean as necessary.

5. Spray a tinted penetrating encapsulant on pipe and exposed ends of insulation.

6. Inspect piping and reapply encapsulant as necessary.

7. Prepare area for final air clearance.

8. Carry out final clearance requirements specified on sheets 10 and 21.

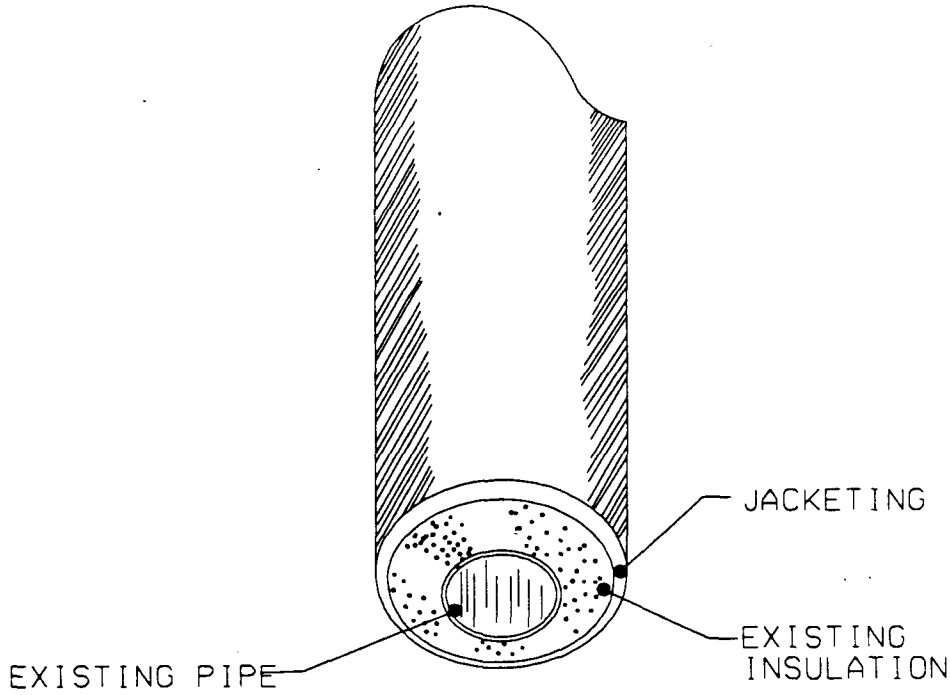

Removal of pipe insulation (using mini-containment area)

1. Prepare mini-containment area as specified on sheet 7.

2. Adequately wet mist insulation surface with amended water, initially and during removal. Remove jacketing and insulation from pipe and hanger system.

3. Clean exposed surfaces by spraying with amended water and brushing.

4. Inspect and reclean area as necessary.

5. Spray a tinted penetrating encapsulant on pipe and exposed ends of insulation. Inspect and reapply as necessary.

6. Prepare area for final clearance.

7. Carry out final clearance requirements specified on sheet 7.