SPECIFICATIONS
FOR DESIGN/BUILD CONTRACT
SOLICITATION NO. DACA45-03-R-0042

CONSOLIDATED SPACE GROUP OPERATIONS FACILITY
PN: GLEN043003

SCHRIEVER AFB, COLORADO

PROPOSAL INFORMATION & RFP CRITERIA

JUNE 2003

US ARMY CORPS OF ENGINEERS
OMAHA DISTRICT

This page was intentionally left blank for duplex printing.

REQUEST FOR PROPOSAL DOCUMENTS FOR
CONSOLIDATED SPACE GROUP OPERATIONS FACILITY
GLEN 04-3003

SCHRIEVER AFB, COLORADO

PROJECT TABLE OF CONTENTS

DIVISION 00 – CONTRACT REQUIREMENTS

S1442 SOLICITATION, OFFER & AWARD (STD. FORM 1442), PAGES 00010-1 & 2
00010 PRICING SCHEDULE (PAGES 00010-3 & 4
00100 INSTRUCTIONS, CONDITIONS AND NOTICES TO OFFERORS
00110 PROPOSAL INSTRUCTIONS, SUBMISSION REQUIREMENTS AND EVALUATION
00600 REPRESENTATION, CERTIFICATION & OTHER STATEMENTS OF OFFERORS
00700 CONTRACT CLAUSES
00800 SPECIAL CONTRACT REQUIREMENTS
COLORADO WAGE DETERMINATIONS (BUILDING)
COLORADO WAGE DETERMINATIONS (HEAVY)
CONSTRUCTION SIGNAGE

TECHNICAL CRITERIA REQUIREMENTS/SPECIFICATIONS

DIVISION 01 - GENERAL REQUIREMENTS

01001 SUMMARY OF WORK
01002 SITE WORK
01003 ARCHITECTURAL BUILDING REQUIREMENTS
01004 INTERIOR DESIGN REQUIREMENTS
01005 STRUCTURAL REQUIREMENTS
01006 MECHANICAL REQUIREMENTS
01007 ELECTRICAL REQUIREMENTS
01008 FIRE PROTECTION REQUIREMENTS
01040 AS-BUILT DRAWINGS
01200 WARRANTY OF CONSTRUCTION
01320A PROJECT SCHEDULE
01330 SUBMITTAL PROCEDURES
E4288 SUBMITTAL REGISTER (SAMPLE)
E4025 ENG. FORM 4025, TRANSMITTAL FORM
01332 DESIGN AND CONSTRUCTION DELIVERABLES/PROCEDURES
DD1354 DD FORM 1354 - TRANSFER AND ACCEPTANCE OF MILITARY REAL PROPERTY
DD1354INSTRUCTIONS FOR PREPARATION OF DD FORM 1354
01336 60 PERCENT DESIGN REQUIREMENTS
ADA ADA ARCHITECTURAL DESIGN CHECKLIST
FCA FIRE CODE ANALYSIS
01338 100 PERCENT DESIGN REQUIREMENTS
01355 ENVIRONMENTAL PROTECTION
01400 SPECIAL SAFETY REQUIREMENTS
01451A CONTRACTOR QUALITY CONTROL
01510 SPECIAL SECURITY
01565 NPDES PERMIT REQUIREMENTS FOR STORM WATER DISCHARGES FROM CONSTRUCTION SITES
01565AT1 STORM WATER GENERAL PERMIT FOR CONSTRUCTION ACTIVITIES

01565AT2 NOTICE OF INTENT
01565AT3 STORM WATER POLLUTION PREVENTION PLAN
01565AT4 NOTICE OF TERMINATION
01670 RECYCLED / RECOVERED MATERIALS

ATTACHMENTS

ATTACHMENT NO. 1 – FINAL FOUNDATION ANALYSIS
ATTACHMENT NO. 2 - LANDSCAPE AND WATER CONSERVATION DESIGN GUIDELINES
ATTACHMENT NO. 3 - AVAILABLE EDITED AND UNEDITED GUIDE SPECIFICATIONS
01356 STORM WATER POLLUTION PREVENTION MEASURES
02560 (COLORADO) PAVEMENTS FOR SMALL PROJECTS
15951A DIRECT DIGITAL CONTROL FOR HVAC
ATTACHMENT NO. 4 - REFERENCES
ATTACHMENT NO. 5 - CABLE MANAGEMENT COORDINATION SHEET
COMMUNICATIONS CABLE TRAY AND CONDUIT GROUNDING
ATTACHMENT NO. 6 - 5OTH SPACE WING INSTRUCTION 33-105
FACILITY INSTALLATION STANDARD
ATTACHMENT NO. 7 – RFP DRAWINGS (ON CD-ROM)

SOLICITATION, OFFER, AND AWARD (Construction, Alteration, or Repair)	1. SOLICITATION NO.	2. TYPE OF SOLICITATION	3. DATE ISSUED	PAGE OF PAGES
	DACA45-03-R-0042	☐ SEALED BID (IFB) ☒ NEGOTIATED (RFP)	26 JUN 2003	1 OF 4

IMPORTANT - The "offer" section on the reverse must be fully completed by offeror.

4. CONTRACT NO.	5. REQUISITION/PURCHASE REQUEST NO.	6. PROJECT NO.

7. ISSUED BY CODE CT

U S ARMY ENGINEER DISTRICT, OMAHA
106 South 15th Street
Omaha, Nebraska 68102-1618

8. ADDRESS OFFER TO

U.S.ARMY CORPS OF ENGINEERS, OMAHA
Attn: CONTRACTING DIVISION (CENWO-CT)
106 South 15th Street
Omaha, Nebraska 68102-1618

9. FOR INFORMATION CALL: ▶	A. NAME	B. TELEPHONE NO. (Include area code) (NO COLLECT CALLS)
	See SECTION 00100, Para. 14	See SECTION 00100, Para. 14

SOLICITATION

NOTE: In sealed bid solicitations "offer" and "offeror" mean "bid" and "bidder".

10. THE GOVERNMENT REQUIRES PERFORMANCE OF THE WORK DESCRIBED IN THESE DOCUMENTS (Title, identifying no., date):

The Offeror hereby agrees to do all the work described in these documents entitled:

CONSOLIDATED SPACE GROUP OPERATIONS FACILITY
P.N. GLEN043003
SCHRIEVER AFB, COLORADO

RETURN WITH PROPOSAL: INFORMATION REQUIRED BY SECTION 00110; SECTION 00010 (SF1442); AND SECTION 00600

OTHER BONDING INFORMATION: SEE CONTRACT CLAUSES CLAUSE "PERFORMANCE AND PAYMENT BONDS".

*-SEE SECTION 00800, PARA.1 AND SECTION 00110:PROPOSAL INSTRUCTIONS, SUBMISSION REQUIREMENTS AND EVALUATION (Contractor to Propose Number of Calendar days)
**-SEE SECTION 00110:PROPOSAL INSTRUCTIONS, SUBMISSION REQUIREMENTS AND EVALUATION (For number of Proposal Copies)

11. The Contractor shall begin performance within 10 calendar days and complete it within * calendar days after receiving

☐ award, ☒ notice to proceed. This performance period is ☒ mandatory, ☐ negotiable. (See _____ .)

12A. THE CONTRACTOR MUST FURNISH ANY REQUIRED PERFORMANCE AND PAYMENT BONDS? (If "YES," indicate within how many calendar days after award in Item 12B.)	12B. CALENDAR DAYS
☒ YES ☐ NO	10

13. ADDITIONAL SOLICITATION REQUIREMENTS:

A. Sealed offers in original and ** copies to perform the work required are due at the place specified in Item 8 by 1400 (hour) local time 25 JUL 2003 (date). If this is a sealed bid solicitation, offers must be publicly opened at that time. Sealed envelopes containing offers shall be marked to show the offeror's name and address, the solicitation number, and the date and time offers are due.

B. An offer guarantee ☐ is, ☒ is not required.

C. All offers are subject to the (1) work requirements, and (2) other provisions and clauses incorporated in the solicitation in full text or by reference.

D. Offers providing less than 60 calendar days for Government acceptance after the date offers are due will not be considered and will be rejected.

14. NAME AND ADDRESS OF OFFEROR (Include ZIP Code)	15. TELEPHONE NO. (Include area code)
DUNS Number:	16. REMITTANCE ADDRESS (Include only if different than Item 14)
CODE FACILITY CODE	

17. The offeror agrees to perform the work required at the prices specified below in strict accordance with the terms of this solicitation, if this offer is accepted by the Government in writing within 60 calendar days after the date offers are due. (Insert any number equal to or greater than the minimum requirement stated in Item 13D. Failure to insert any number means the offeror accepts the minimum in Item 13D.)

AMOUNTS ▶ SEE PRICING SCHEDULE (PAGES 00010-3,4)

Contractor's Fax No._____ CAGE CODE _____

Contractor's E-Mail address_____

18. The offeror agrees to furnish any required performance and payment bonds.

19. ACKNOWLEDGMENT OF AMENDMENTS

(The offeror acknowledges receipt of amendments to the solicitation - give number and date of each)

AMENDMENT NO.										
DATE										

20A. NAME AND TITLE OF PERSON AUTHORIZED TO SIGN OFFER (Type or print)	20B. SIGNATURE	20C. OFFER DATE

AWARD (To be completed by Government)

21. ITEMS ACCEPTED:

22. AMOUNT	23. ACCOUNTING AND APPROPRIATION DATA

24. SUBMIT INVOICES TO ADDRESS SHOWN IN (4 copies unless otherwise specified) ▶	ITEM 26	25. OTHER THAN FULL AND OPEN COMPETITION PURSUANT TO ☐ 10 U.S.C. 2304(c) ( ) ☐ 41 U.S.C. 253(c) ( )

26. ADMINISTERED BY CODE	27. PAYMENT WILL BE MADE BY
U.S. Army Engineer District, Omaha 106 South 15th Street Omaha, Nebraska 68102-1618	USAED Omaha c/o USACE Finance Center 5722 Integrity Drive Millington, TN 38054-5005

CONTRACTING OFFICER WILL COMPLETE ITEM 28 OR 29 AS APPLICABLE

☐ 28. NEGOTIATED AGREEMENT (contractor is required to sign this document and return_____ copies to issuing office.) Contractor agrees to furnish and deliver all items or perform all work, requisitions identified on this form and any continuation sheets for the consideration stated in this contract. The rights and obligations of the parties to this contract shall be governed by (a) this contract award, (b) the solicitation, and (c) the clauses, representations, certifications, and specifications incorporated by reference in or attached to this contract.

☐ 29. AWARD (Contractor is not required to sign this document.) Your offer on this solicitation, is hereby accepted as to the items listed. This award consummates the contract, which consists of (a) the Government solicitation and your offer, and (b) this contract award. No further contractual document is necessary.

30A. NAME AND TITLE OF CONTRACTOR OR PERSON AUTHORIZED TO SIGN (Type or print)		31A. NAME OF CONTRACTING OFFICER (Type or print)	
30B. SIGNATURE	30C. DATE	31B. UNITED STATES OF AMERICA BY	31C. AWARD DATE

STANDARD FORM 1442 BACK (REV. 4-85)

PRICING SCHEDULE

BASIC ITEMS				
Item No.	**Description**	**Quantity**	**Unit**	**Total Amount**
0001	**All Work Complete for the Consolidated Space Group Operations Facility; Excluding Options listed below.**			
	Construction Cost	**Job**	**Lump Sum**	**$_____**
	Design Cost	**Job**	**Lump Sum**	**$_____**
Total Basic for Consolidated Space Group Operations Facility (Construction + Design) $_____				
OPTION ITEMS				
O-0001	**Additional Cost for Main Crawl Space w/concrete floor slab. Include any variation made for the Radon System supporting this crawlspace in lieu of Basic (See Drawings)**			
	Construction Cost	**Job**	**Lump Sum**	**$_____**
	Design Cost	**Job**	**Lump Sum**	**$_____**
O-0002	**Additional Cost for North Crawl Space w/concrete floor slab. Include any variation made for the Radon System supporting this crawlspace in lieu of Basic (See Drawings)**			
	Construction Cost	**Job**	**Lump Sum**	**$_____**
	Design Cost	**Job**	**Lump Sum**	**$_____**
O-0003	**Additional Cost for South Crawl Space w/concrete floor slab. Include any variation made for the Radon System supporting this crawlspace in lieu of Basic (See Drawings)**			
	Construction Cost	**Job**	**Lump Sum**	**$_____**
	Design Cost	**Job**	**Lump Sum**	**$_____**

OPTION ITEMS (Continued)				
O-0004	**Additional Cost for landscaping and irrigation. (See Drawings)**			
	Construction Cost	**Job**	**Lump Sum**	**$_____**
	Design Cost	**Job**	**Lump Sum**	**$_____**
GRAND TOTAL AMOUNT FOR CONSOLIDATED SPACE GROUP OPERATIONS FACILITY				
GRAND TOTAL AMOUNT (BASIC + ALL OPTIONS)				**$_____**

NOTES:

1. See Section 00100, INSTRUCTIONS, CONDITIONS AND NOTICES OFFERORS, paragraph 3 EVALUATION OF OPTIONS for evaluation of bid items and options. The Government reserves the right to exercise the Options within 60 days after Notice to Proceed. Evaluation of Options will not obligate the Government to exercise any of the option(s).

2. Prices must be entered for all line items on the Pricing Schedule. Grand total amount price submitted without prices for individual line items will not be evaluated. Additions will be subject to verification by the Government. In case of variation between the lump-sum prices and the grand total amount, the lump-sum prices will be considered the price.

3. A modification to the Pricing Schedule, which provides for a single adjustment to the grand total amount will not be accepted. Modification to Pricing Schedule items, basic or options, should state the application of the adjustment to each respective lump-sum price affected. If the modification is not so apportioned the Pricing Schedule item will not be evaluated.

SECTION 00100

INSTRUCTIONS, CONDITIONS AND NOTICES TO OFFERORS
(July 2000, Revised May 2003)

INDEX

Attachment: Required Central Contractor Registration

1 DEFINITION OF "DESIGN-BUILD" PROCESS....2

2 SOLICITATION RESTRICTIONS. 2

2.1 GENERAL CONTRACTOR....2
2.2 ESTIMATED DESIGN AND CONSTRUCTION COST....2
2.3 RESERVED....2
2.4 RETURN ADDRESS REQUIREMENTS 2

3 (FAR 52.217-5) EVALUATION OF OPTIONS (JUL 1990)....2

4 (FAR 52.211-2) AVAILABILITY OF SPECIFICATIONS 2

5 (FAR 52.215-1) INSTRUCTIONS TO OFFERORS--COMPETITIVE ACQUISITION (MAY 2001) 3

6 (FAR 52.216-1) TYPE OF CONTRACT (APR 1984)....6

7 (FAR 52.204-6) DATA UNIVERSAL NUMBERING SYSTEM (DUNS) NUMBER (JUNE 1999) 6

8 SMALL BUSINESS SIZE STANDARD....7

9 NORTH AMERICAN INDUSTRY CLASSIFICATION SYSTEM (NAICS). 7

10 (DFARS 252.204-7004) REQUIRED CENTRAL CONTRACTOR REGISTRATION (NOV 2001) 7

11 (FAR 52.236-28) PREPARATION OF PROPOSALS—CONSTRUCTION (OCT 1997) 8

12 (FAR 52.233-2) SERVICE OF PROTEST (AUG 1996). 9

13 (FAR 52.236-27) SITE VISIT (CONSTRUCTION) (FEB 1995). 9

14 OFFEROR'S QUESTIONS AND COMMENTS....10

14.1 PLAN HOLDER'S LIST. 11

15 GENERAL DESCRIPTION OF WORK. 11

16 PROPOSAL SUBMISSION REQUIREMENTS, INSTRUCTIONS AND EVALUATION. 11

17 SOURCE SELECTION BOARD (SSB). 11

18 COLORADO SALES AND USE TAX. 11

18.1 CITY TAXES. 11

SECTION 00100

INSTRUCTIONS, CONDITIONS AND NOTICES TO OFFERORS

1 DEFINITION OF "DESIGN-BUILD" PROCESS

The "Design-Build Process is the procurement of a facility utilizing a Request for Proposal (RFP) to solicit for the design and construction of a facility by a single contractual entity. The contractual entity may be a "Design-Build" firm, or joint venture between an architect-engineer (A-E) and construction firm, or a construction management (CM) firm joint venture with an A-E and a construction firm.

2 SOLICITATION RESTRICTIONS

2.1 GENERAL CONTRACTOR

This solicitation is unrestricted (not limited to small business concerns).

2.2 ESTIMATED DESIGN AND CONSTRUCTION COST

The estimated design and construction cost of this project is between $5,000,000 and $7,500,000.

2.3 RESERVED

2.4 RETURN ADDRESS REQUIREMENTS

Offeror(s) must ensure that **ALL** mail sent to the Omaha District, U.S. Army Corps of Engineers, either pre-contract or post-contract award, has a return mailing address on the outside of the envelope, package, box, etc. **ANY MAIL** addressed to the U.S. Army Corps of Engineers, including but not limited to bids, modifications to bids, proposals, revised proposals, bonds, correspondence, etc., **will be REJECTED** by the US Army Corps of Engineers mail room facility located at 106 South Street, Omaha, Nebraska 68102-1618 if it does not contain a return mailing address. **There will be no exceptions.**

3 (FAR 52.217-5) EVALUATION OF OPTIONS (JUL 1990)

Except when it is determined in accordance with FAR 17.206(b) not to be in the Government's best interests, the Government will evaluate offers for award purposes by adding the total price for all options to the total price for the basic requirement. Evaluation of options will not obligate the Government to exercise the option(s).

4 (FAR 52.211-2) AVAILABILITY OF SPECIFICATIONS LISTED IN THE DOD INDEX OF SPECIFICATIONS AND STANDARDS (DODISS) AND DESCRIPTIONS LISTED IN THE ACQUISITION MANAGEMENT SYSTEMS AND DATA REQUIREMENTS CONTROL LIST, DOD 5010.12-L (DEC 1999)

Copies of specifications, standards, and data item descriptions cited in this

solicitation may be obtained—

(a) From the ASSIST database via the Internet at http://assist.daps.mil; or

(b) By submitting a request to the—

Department of Defense Single Stock Point (DoDSSP)
Building 4, Section D
700 Robbins Avenue
Philadelphia, PA 19111-5094
Telephone (215) 697-2667/2179
Facsimile (215) 697-1462.

(End of provision)

5 (FAR 52.215-1) INSTRUCTIONS TO OFFERORS--COMPETITIVE ACQUISITION (MAY 2001)

(a) *Definitions*. As used in this provision—

"Discussions" are negotiations that occur after establishment of the competitive range that may, at the Contracting Officer's discretion, result in the offeror being allowed to revise its proposal.

"In writing," "writing," or "written" means any worded or numbered expression that can be read, reproduced, and later communicated, and includes electronically transmitted and stored information.

"Proposal modification" is a change made to a proposal before the solicitation's closing date and time, or made in response to an amendment, or made to correct a mistake at any time before award.

"Proposal revision" is a change to a proposal made after the solicitation closing date, at the request of or as allowed by a Contracting Officer as the result of negotiations.

"Time," if stated as a number of days, is calculated using calendar days, unless otherwise specified, and will include Saturdays, Sundays, and legal holidays. However, if the last day falls on a Saturday, Sunday, or legal holiday, then the period shall include the next working day.

(b) *Amendments to solicitations*. If this solicitation is amended, all terms and conditions that are not amended remain unchanged. Offerors shall acknowledge receipt of any amendment to this solicitation by the date and time specified in the amendment(s).

(c) *Submission, modification, revision, and withdrawal of proposals*. (1) Unless other methods (*e.g.*, electronic commerce or facsimile) are permitted in the solicitation, proposals and modifications to proposals shall be submitted in paper media in sealed envelopes or packages (i) addressed to the office specified in the solicitation, and (ii) showing the time and date specified for receipt, the solicitation number, and the name and address of the offeror. Offerors using commercial carriers should ensure that the proposal is marked on the outermost wrapper with the information in paragraphs (c)(1)(i) and (c)(1)(ii) of this provision.

(2) The first page of the proposal must show—

(i) The solicitation number;

(ii) The name, address, and telephone and facsimile numbers of the offeror (and electronic address if available);

(iii) A statement specifying the extent of agreement with all terms, conditions, and provisions included in the solicitation and agreement to furnish any or all items upon which prices are offered at the price set opposite each item;

(iv) Names, titles, and telephone and facsimile numbers (and

electronic addresses if available) of persons authorized to negotiate on the offeror's behalf with the Government in connection with this solicitation; and

(v) Name, title, and signature of person authorized to sign the proposal. Proposals signed by an agent shall be accompanied by evidence of that agent's authority, unless that evidence has been previously furnished to the issuing office.

(3) *Submission, modification, revision, and withdrawal of proposals*.

(i) Offerors are responsible for submitting proposals, and any modifications or revisions, so as to reach the Government office designated in the solicitation by the time specified in the solicitation. If no time is specified in the solicitation, the time for receipt is 4:30 p.m., local time, for the designated Government office on the date that proposal or revision is due.

(ii)(A) Any proposal, modification, or revision received at the Government office designated in the solicitation after the exact time specified for receipt of offers is "late" and will not be considered unless it is received before award is made, the Contracting Officer determines that accepting the late offer would not unduly delay the acquisition; and—

(*1*) If it was transmitted through an electronic commerce method authorized by the solicitation, it was received at the initial point of entry to the Government infrastructure not later than 5:00 p.m. one working day prior to the date specified for receipt of proposals; or

(*2*) There is acceptable evidence to establish that it was received at the Government installation designated for receipt of offers and was under the Government's control prior to the time set for receipt of offers; or

(*3*) It is the only proposal received.

(B) However, a late modification of an otherwise successful proposal that makes its terms more favorable to the Government, will be considered at any time it is received and may be accepted.

(iii) Acceptable evidence to establish the time of receipt at the Government installation includes the time/date stamp of that installation on the proposal wrapper, other documentary evidence of receipt maintained by the installation, or oral testimony or statements of Government personnel.

(iv) If an emergency or unanticipated event interrupts normal Government processes so that proposals cannot be received at the office designated for receipt of proposals by the exact time specified in the solicitation, and urgent Government requirements preclude amendment of the solicitation, the time specified for receipt of proposals will be deemed to be extended to the same time of day specified in the solicitation on the first work day on which normal Government processes resume.

(v) Proposals may be withdrawn by written notice received at any time before award. Oral proposals in response to oral solicitations may be withdrawn orally. If the solicitation authorizes facsimile proposals, proposals may be withdrawn via facsimile received at any time before award, subject to the conditions specified in the provision at 52.215-5, Facsimile Proposals. Proposals may be withdrawn in person by an offeror or an authorized representative, if the identity of the person requesting withdrawal is established and the person signs a receipt for the proposal before award.

(4) Unless otherwise specified in the solicitation, the offeror may propose to provide any item or combination of items.

(5) Offerors shall submit proposals in response to this solicitation in English, unless otherwise permitted by the solicitation, and

in U.S. dollars, unless the provision at FAR 52.225-17, Evaluation of Foreign Currency Offers, is included in the solicitation.

(6) Offerors may submit modifications to their proposals at any time before the solicitation closing date and time, and may submit modifications in response to an amendment, or to correct a mistake at any time before award.

(7) Offerors may submit revised proposals only if requested or allowed by the Contracting Officer.

(8) Proposals may be withdrawn at any time before award. Withdrawals are effective upon receipt of notice by the Contracting Officer.

(d) *Offer expiration date*. Proposals in response to this solicitation will be valid for the number of days specified on the solicitation cover sheet (unless a different period is proposed by the offeror).

(e) *Restriction on disclosure and use of data*. Offerors that include in their proposals data that they do not want disclosed to the public for any purpose, or used by the Government except for evaluation purposes, shall—

(1) Mark the title page with the following legend:
This proposal includes data that shall not be disclosed outside the Government and shall not be duplicated, used, or disclosed—in whole or in part—for any purpose other than to evaluate this proposal. If, however, a contract is awarded to this offeror as a result of—or in connection with—the submission of this data, the Government shall have the right to duplicate, use, or disclose the data to the extent provided in the resulting contract. This restriction does not limit the Government's right to use information contained in this data if it is obtained from another source without restriction. The data subject to this restriction are contained in sheets [*insert numbers or other identification of sheets*]; and

(2) Mark each sheet of data it wishes to restrict with the following legend:
Use or disclosure of data contained on this sheet is subject to the restriction on the title page of this proposal.

(f) *Contract award*. (1) The Government intends to award a contract or contracts resulting from this solicitation to the responsible offeror(s) whose proposal(s) represents the best value after evaluation in accordance with the factors and subfactors in the solicitation.

(2) The Government may reject any or all proposals if such action is in the Government’s interest.

(3) The Government may waive informalities and minor irregularities in proposals received.

(4) The Government intends to evaluate proposals and award a contract without discussions with offerors (except clarifications as described in FAR 15.306(a)). Therefore, the offeror’s initial proposal should contain the offeror’s best terms from a cost or price and technical standpoint. The Government reserves the right to conduct discussions if the Contracting Officer later determines them to be necessary. If the Contracting Officer determines that the number of proposals that would otherwise be in the competitive range exceeds the number at which an efficient competition can be conducted, the Contracting Officer may limit the number of proposals in the competitive range to the greatest number that will permit an efficient competition among the most highly rated proposals.

(5) The Government reserves the right to make an award on any item for a quantity less than the quantity offered, at the unit cost or prices offered, unless the offeror specifies otherwise in the proposal.

(6) The Government reserves the right to make multiple awards if, after considering the additional administrative costs, it is in the Government’s best interest to do so.

(7) Exchanges with offerors after receipt of a proposal do not

constitute a rejection or counteroffer by the Government.

(8) The Government may determine that a proposal is unacceptable if the prices proposed are materially unbalanced between line items or subline items. Unbalanced pricing exists when, despite an acceptable total evaluated price, the price of one or more contract line items is significantly overstated or understated as indicated by the application of cost or price analysis techniques. A proposal may be rejected if the Contracting Officer determines that the lack of balance poses an unacceptable risk to the Government.

(9) If a cost realism analysis is performed, cost realism may be considered by the source selection authority in evaluating performance or schedule risk.

(10) A written award or acceptance of proposal mailed or otherwise furnished to the successful offeror within the time specified in the proposal shall result in a binding contract without further action by either party.

(11) The Government may disclose the following information in postaward debriefings to other offerors:

(i) The overall evaluated cost or price and technical rating of the successful offeror;

(ii) The overall ranking of all offerors, when any ranking was developed by the agency during source selection;

(iii) A summary of the rationale for award; and

(iv) For acquisitions of commercial items, the make and model of the item to be delivered by the successful offeror.

(End of provision)

6 (FAR 52.216-1) TYPE OF CONTRACT (APR 1984)

The Government contemplates award of a firm fixed price contract resulting from this solicitation.

(End of provision)

7 (FAR 52.204-6) DATA UNIVERSAL NUMBERING SYSTEM (DUNS) NUMBER (JUNE 1999)

(a) The offeror shall enter, in the block with its name and address on the cover page of its offer, the annotation "DUNS" followed by the DUNS number that identifies the offeror's name and address exactly as stated in the offer. The DUNS number is a nine-digit number assigned by Dun and Bradstreet Information Services.

(b) If the offeror does not have a DUNS number, it should contact Dun and Bradstreet directly to obtain one. A DUNS number will be provided immediately by telephone at no charge to the offeror. For information on obtaining a DUNS number, the offeror, if located within the United States, should call Dun and Bradstreet at 1-800-333-0505. The offeror should be prepared to provide the following information:

(1) Company name.

(2) Company address.

(3) Company telephone number.

(4) Line of business.

(5) Chief executive officer/key manager.

(6) Date the company was started.

(7) Number of people employed by the company.

(8) Company affiliation.

(c) Offerors located outside the United States may obtain the location and phone number of the local Dun and Bradstreet Information Services office from the Internet home page at http://www.customerservice@dnb.com. If an offeror is unable to locate a local service center, it may send an e-mail to Dun and Bradstreet at globalinfo@mail.dnb.com.

(End of provision)

8 SMALL BUSINESS SIZE STANDARD

The small business size standard is gross annual receipts for its preceding 3 fiscal years did not exceed [$12.0][$28.5][$17.0] million.

9 NORTH AMERICAN INDUSTRY CLASSIFICATION SYSTEM (NAICS)

In accordance with Sector 23 of the NAICS Manual, the work in this solicitation is assigned classification code 236220.

10 (DFARS 252.204-7004) REQUIRED CENTRAL CONTRACTOR REGISTRATION (NOV 2001)

(a) Definitions.

As used in this clause--

(1) "Central Contractor Registration (CCR database" means the primary DoD repository for contractor information required for the conduct of business with DoD.

(2) "Data Universal Numbering System (DUNS) number" means the 9-digit number assigned by Dun and Bradstreet Information Services to identify unique business entities.

(3) "Data Universal Numbering System +4 (DUNS+4) number" means the DUNS number assigned by Dun and Bradstreet plus a 4-digit suffix that may be assigned by a parent (controlling) business concern. This 4-digit suffix may be assigned at the discretion of the parent business concern for such purposes as identifying subunits or affiliates of the parent business concern.

(4) "Registered in the CCR database" means that all mandatory information, including the DUNS number or the DUNS+4 number, if applicable, and the corresponding Commercial and Government Entity (CAGE) code, is in the CCR

database; the DUNS number and the CAGE code have been validated; and all edits have been successfully completed.

(b)(1) By submission of an offer, the offeror acknowledges the requirement that a prospective awardee must be registered in the CCR database prior to award, during performance, and through final payment of any contract resulting from this solicitation, except for awards to foreign vendors for work to be performed outside the United States.

(2) The offeror shall provide its DUNS or, if applicable, its DUNS+4 number with its offer, which will be used by the Contracting Officer to verify that the offeror is registered in the CCR database.

(3) Lack of registration in the CCR database will make an offeror ineligible for award.

(4) DoD has established a goal of registering an applicant in the CCR database within 48 hours after receipt of a complete and accurate application via the Internet. However, registration of an applicant submitting an application through a method other than the Internet may take up to 30 days. Therefore, offerors that are not registered should consider applying for registration immediately upon receipt of this solicitation.

(c) The Contractor is responsible for the accuracy and completeness of the data within the CCR, and for any liability resulting from the Government's reliance on inaccurate or incomplete data. To remain registered in the CCR database after the initial registration, the Contractor is required to confirm on an annual basis that its information in the CCR database is accurate and complete.

(d) Offerors and contractors may obtain information on registration and annual confirmation requirements by calling 1-888-227-2423, or via the Internet at http://www.ccr.gov.

(End of clause)

11 (FAR 52.236-28) PREPARATION OF PROPOSALS—CONSTRUCTION (OCT 1997)

(a) Proposals must be (1) submitted on the forms furnished by the Government or on copies of those forms; and (2) manually signed. The person signing a proposal must initial each erasure or change appearing on any proposal form.

(b) The proposal form may require offerors to submit proposed prices for one or more items on various bases, including—

(1) Lump sum price;
(2) Alternate prices;
(3) Units of construction; or
(4) Any combination of paragraphs (b)(1) through (b)(3) of this provision.

(c) If the solicitation requires submission of a proposal on all items, failure to do so may result in the proposal being rejected without further consideration. If a proposal on all items is not required, offerors should insert the words "no proposal" in the space provided for any item on which no price is submitted.

(d) Alternate proposals will not be considered unless this solicitation authorizes their submission.

(End of provision)

12 (FAR 52.233-2) SERVICE OF PROTEST (AUG 1996)

(a) Protests, as defined in section 33.101 of the Federal Acquisition Regulation, that are filed directly with an agency, and copies of any protests that are filed with the General Accounting Office (GAO), shall be served on the Contracting Officer (addressed as follows) by obtaining written and dated acknowledgement of receipt from District Counsel, 106 South 15th Street, Omaha, Nebraska 68102-1618.

(b) The copy of any protest shall be received in the office designated above within one day of filing a protest with the GAO.

13 (FAR 52.236-27) SITE VISIT (CONSTRUCTION) (FEB 1995)

(a) The clauses at 52.236-2, Differing Site Conditions, and 52.236-3, Site Investigations and Conditions Affecting the Work, will be included in any contract awarded as a result of this solicitation. Accordingly, offerors or quoters are urged and expected to inspect the site where the work will be performed.

(b) A Site Visit is scheduled on 10 July 2003. Assembly will take place at the Corps of Engineers, Schriever AFB Resident Office, located on west side of Enoch Road across from the Schriever AFB West Gate. Site Visit will begin promptly at 9:00 a.m. All contractors **must** contact the Corps of Engineers Schriever AFB Resident Office no later than 2 July 2003 so that arrangements can be made with the Visitors Center and Security Police for badging to allow entry of the Contractors onto the base and to examine the site. The Point of Contact at the Resident Office is John Offen, Telephone: (719) 683-3657. The fax number at the Resident Office is (719) 683-3659. Contractors must provide a fax with the following information to the Resident Office for all visitors attending:

1) Name of Contractor or Firm Represented
2) Visitor Name
3) Visitor Social Security Number
4) Visitor Date of Birth and Place of Birth
5) Visitor Driver's License Number
6) Visitor Proof of Citizenship

Provide a phone number on each fax so that information, which may be illegible or requires additional clarification can be verified, if necessary. **NOTE: THIS INFORMATION MAY NOT BE TRANSMITTED VERBALLY – ONLY A FAX CONTAINING THE INFORMATION IS ACCEPTABLE.** Contractors will receive badging and will be shuttled/escorted from the Corps Resident Office onto the base by Schriever AFB Security Personnel. Because of security issues and badge requirements, please plan to arrive early. Questions regarding the site visit should be directed to the Resident Office at the number listed above, with a copy of the questions provided to U.S. Army Engineer District, Omaha, Contracting Division, CENWO-CT-M (Rostermundt), 106 S 15th Street, Omaha NE 68102-1618. Access to Schriever AFB will be denied to anyone failing to comply with the requirements stated above.

14 OFFEROR'S QUESTIONS AND COMMENTS

Questions and/or comments relative to these documents should be submitted via e-mail or mailed to: U.S. Army Corps of Engineers, Omaha District, ATTN: CENWO-CT-M 106 South 15th Street, Omaha, NE 68102-1618. Comments should reach this office no later than 20 calendar days prior to the date set for receiving of proposals, if feasible, in order that changes, if needed, may be added by amendment.] E-mail addresses, FAX numbers, items for question and points of contact are listed below. Phone calls with questions should be made between 8:30 a.m. and 3:30 p.m. (Central Standard Time) Monday through Friday.

Note: A courtesy copy of all questions shall be sent to the Contract Specialist (Contractual Matters Point of Contact), the Program Manager and the Specifications Section (Technical Contents Points of Contact), except for Small Business questions. Small Business questions shall go to the Small Business Matters point of contact.

Items for Question	Points of Contact/ Phone numbers/ FAX Numbers	E-mail Addresses
Contractual Matters: Ordering CD-Rom of the proposal documents (limit One per firm)/ amendments**/ Receipt of Proposals	Stephanie Rostermundt 402-221-4134 (phone) 402-221-4199 (fax)	stephanie.a.rostermundt @usace.army.mil
Planholder's List	See paragraph: PLAN HOLDER'S LIST, below.	
Small Business Matters	Hubert Carter 402-221-4110 (phone)	hubert.j.carter@usace.army.mil
Technical Contents Of Proposal Documents	Michael Armstrong 402-221-3981 (phone) 402-221-4828(fax)	michael.l.armstrtong@usace.army.mil
CD-ROM	Specifications Section Michael Pisci 402-221-4413 402-221-3842	Michael.r.pisci@usace.army.mil
Site Inspection	See Paragraph: SITE INSPECTION, above	

**** - The Government may elect to send a notification that an amendment has been posted to the Government's web address, but is not required to. It shall be the Contractor's, Subcontractor's and Supplier's responsibility to check the Government's web address for amendments.**

14.1 PLAN HOLDER'S LIST

The CD-Rom will provide a list of plan holders that have registered at the time the CD-Rom was created. It is offeror's responsibility to check for any updates to the plan holder's list, which is available at the following web address:

http://ebs-nwo.wes.army.mil/

15 GENERAL DESCRIPTION OF WORK

Scope of project includes all work required to design and construct the Consolidated Space Group Operations Facility located at Schriever AFB, Colorado. Work shall be in accordance with Request for Proposal documents issued with this solicitation.

16 PROPOSAL SUBMISSION REQUIREMENTS, INSTRUCTIONS AND EVALUATION

See SECTION 00110: PROPOSAL INSTRUCTIONS, SUBMISSION REQUIREMENTS AND EVALUATION.

17 SOURCE SELECTION BOARD (SSB)

The Contracting Officer has established a Source Selection Board to conduct an evaluation of each proposal received in response to this Solicitation. The evaluation will be based exclusively on the merits and content of the proposal and any subsequent discussion required. The identities of the SSB personnel are confidential, and any attempt by the proposers to contact these individuals is prohibited.

18 COLORADO SALES AND USE TAX

Specific exemption from the Colorado Sales and Use Taxes will be granted by the Colorado Tax authorities with respect to all materials used by a prime Contractor or subcontractor and which are built into structures furnished under contract to a Government agency. The Colorado Sales and Use Taxes shall be excluded from the bid prices. Exemption certificates are available to both Contractors and subcontractors provided personal application is made therefor to the Department of Revenue, State of Colorado, State Capitol Annex, Denver, Colorado. The Contractor or subcontractor will be required to submit the date of the contract, the amount of the contract, and the proposed date for completion of the contract. Telephone: (303) 534-1208 (General Information).

18.1 CITY TAXES

The Municipality of Colorado Springsalso has a sales and use tax. The Municipal tax authorities should be contacted by the bidder to determine applicability of the tax to this project.

REQUIRED CENTRAL CONTRACTOR REGISTRATION (CCR)

Register Now: Don't wait until you submit an offer on a solicitation. You must be registered to receive the contract award. It can often take 30 days for CCR to process your registration information.

Register One of Three Ways:

Internet: http://www.ccr.gov

Value Added Network (VAN) for EDI users: Contact your VAN for information. If you need to find a VAN look at http://www.acq.osd.mil/ec/ecip/van_list.htm

FAX or Mail: Call (888)227-2423 or (616)961-4725 to receive a registration package. FAX or mail the completed information to the CCR Assistance Center. It can take up to 30 days to process a faxed or mailed package.

CCR Assistance Center
74 Washington Street North, Suite 7
Battle Creek, MI 49017-3084
FAX: (616)961-7243

Consolidated Space Group Ops Facility
Schriever AFB, CO

SECTION 00110

PROPOSAL INSTRUCTIONS,
SUBMISSION REQUIREMENTS AND EVALUATION

INDEX

1. WHO MAY SUBMIT 3

2. GENERAL REQUIREMENTS 3

3. SIZE OF PRINTED MATTER SUBMISSIONS 3

4. WHERE TO SUBMIT 3

5. SUBMISSION DEADLINE 3

6. EVALUATION OF PROPOSALS 4

7. EVALUATION FACTORS FOR AWARD 6

8. BINDERS 1 AND 2 - PROPOSAL REQUIREMENTS AND SUBMISSION FORMAT 6

8.1. TAB 1 - DESIGN FIRM EXPERIENCE 8
8.2. TAB - 2 CONSTRUCTION FIRM EXPERIENCE 9
8.3. TAB 3 - DESIGN PERSONNEL EXPERIENCE 10
8.4. TAB 4 - CONSTRUCTION PERSONNEL EXPERIENCE 11
8.5. TAB 5 - PAST PERFORMANCE, DESIGN 12
8.6. TAB 6 - PAST PERFORMANCE, CONSTRUCTION 13
8.7. TAB 7 - PROJECT MANAGEMENT PLAN (PMP) 13
8.8. TAB 8 – SCHEDULE 14
8.9. TAB 9 – UTILIZATION OF SMALL BUSINESS CONCERNS 15

9. BINDER NO. 2 - PRICE 17

10. COMPETITIVE RANGE 19

11. FINAL PROPOSAL REVISIONS 20

12. DEBRIEFING 20

Consolidated Space Group Ops Facility
Schriever AFB, CO
ATTACHMENTS:

Form DD2626: Performance Evaluation (Construction)
Form DD2631: Performance Evaluation (Architect-Engineer)
Example Small Business Subcontracting Plan

SECTION 00110

PROPOSAL INSTRUCTIONS, SUBMISSION REQUIREMENTS AND EVALUATION

1. WHO MAY SUBMIT

This solicitation is open to both large and small business participation.

2. GENERAL REQUIREMENTS

In order to effectively and equitably evaluate all proposals, the Contracting Officer must receive information sufficiently detailed to clearly indicate compliance with the proposal submission requirements.

3. SIZE OF PRINTED MATTER SUBMISSIONS

All written portions (other then the organization chart) shall be in 8-1/2" x 11" format.

4. WHERE TO SUBMIT

Offerors shall submit their proposal packages to the USACE Contracting Activity at the address shown in Block 8 of Standard Form 1442.

5. SUBMISSION DEADLINE

Proposals shall be received by the USACE Contracting Activity no later than the time and date specified in Block 13 of Standard Form 1442.

Due to heightened security at Government installations, those offerors who have their proposals hand-delivered shall contact Stephanie Rostermundt, Contract Specialist at (402) 221-4134 prior to delivering to the U.S. Army Corps of Engineer District, Omaha, 106 South 15th Street, Omaha, NE 68102-1618.

On the date specified and for the thirty minutes prior to the time specified on the Standard Form SF 1442, Page 00010-1, Item 13A, a Contracting Representative will be in the lobby to accept proposals. At the time specified on the Standard Form 1442, Page 00010-1, Item 13.A, it will be announced that receipt of proposals is closed. Official time will be established by the clock located in the area where proposals are received.

6. EVALUATION OF PROPOSALS

a. All proposals and documentation, which have been properly submitted, will be evaluated. Proposals received will be evaluated on the basis of the factors stated in the solicitation to select the responsible offeror whose proposal is most advantageous to the Government. Because of the number of proposals anticipated, uniformity of all proposals is essential to assure fair and accurate evaluation. All proposals must comply with the instructions in the solicitation.

b. All responsible offerors whose proposal has a reasonable chance of being selected will be included in the competitive range in accordance with FAR 15.306(c)(2).

c. Discussions with owners, contract administrators, or other points of contact, provided by the offeror may affect the evaluation rating given for the factors being evaluated by those discussions.

d. Evaluations will be conducted in accordance with the Tradeoff Process, FAR 15.101-1. Tabs 1 through 9 will be rated using an adjectival methodology with a narrative assessment and Binder #2 (Price) will be evaluated after consensus scoring Tabs 1-9. Proposal evaluation is an assessment of the proposal and the offeror's ability to perform the resultant contract successfully. Proposals will be evaluated to determine ratings supported by narratives, and to identify strengths, weaknesses, and deficiencies of the proposed approach in each proposal.

e. Evaluation Definitions.

(1) Strength. A substantive aspect, attribute, or specific item in the proposal that exceeds the solicitation requirements and enhances the probability of successful contract performance.

(2) Weakness. A flaw in the proposal that increases the risk of unsuccessful contract performance. A significant weakness in the proposal is a flaw that appreciably increases the risk.

(3) Deficiency. A material failure of a proposal to meet a Government requirement or a combination of significant weaknesses in a proposal that increases the risk of unsuccessful contract performance to an unacceptable level.

(4) Clarification. Clarifications are limited exchanges between the Government and offerors that may occur when award without discussions is contemplated. If award without discussions is anticipated, offerors may be given the opportunity to clarify certain aspects of their proposals or to resolve minor or clerical errors.

(5) Communications. Communications are exchanges between the Government and offerors after receipt of proposals, leading to establishment of the competitive range.

(6) Discussions. Discussions are negotiations conducted in a competitive acquisition and take place after establishment of the competitive range. Discussions are tailored to each offeror's proposal, and shall be conducted by the Contracting Officer with each offeror within the competitive range.

(7) Rating. The application of a scale of words, colors, or numbers, used in conjunction with narrative, to denote the degree to which the proposal has met the standard for a non-cost factor. For purposes of this solicitation, ratings will consist of words (adjectival method) used in conjunction with narratives. Ratings will be applied at the factor (tab) and subfactor level. If at any level of indentation an Offeror's proposal is evaluated as not meeting a minimum requirement (that is, below the level of acceptable), this fact must be included in the rating and narrative assessment at that level and each higher level of indentation. Therefore, a marginal or unacceptable rating at any level must be carried to the factor (tab) level. The following ratings will be used to evaluate Tabs 1 through 9:

(a) Exceptional. Exceeds requirements of the RFP, provides all required information stated in Section 00110 and is expressed in a manner indicating maximum benefit to the government.

(b) Above Average. Exceeds requirements of the RFP, provides all required information stated in Section 00110 and is expressed in a manner indicating significant benefit to the government.

(c) Average. Complies with the requirements of the RFP as stated in Section 00110. The government may still receive benefit from the proposal submitted.

(d) Marginal. Fails to meet a minimum requirement of the RFP as stated in Section 00110;
however, any deficiencies are correctable without a major revision of the proposal.

(e) Unacceptable. Fails to meet a minimum requirement of the RFP as stated in Section 00110, and the deficiency is uncorrectable without a major revision of the proposal.

(f) Neutral. In the case of an offeror without a record of relevant past performance or for whom information on past performance is not available, the offeror may not be evaluated either favorably or unfavorably on past performance. *

*For Tab 5, Past Performance, Design and Tab 6, Past Performance, Construction, a neutral rating will be awarded when no past performance records are provided. Per Federal Acquisition Regulation (FAR) 15.305(a)(2)(iv), "In the case of an offeror without a record of relevant past performance or for whom information on past performance is not available, the offeror may not be evaluated either favorably or unfavorably on past performance."

7. EVALUATION FACTORS FOR AWARD

The areas to be evaluated include Evaluation Factors, which will be evaluated based on the adjectival method of evaluation. The requirements specified in the solicitation are considered to be minimum requirements. A more favorable evaluation rating may be given for exceeding the minimum requirements. ***Note: Tabs 1-9 are shown below in descending order of importance, excluding Binder 2 (Price), which is approximately equal to all of the combined tab elements contained in Binder No. 1.***

EVALUATION FACTORS

Binder No. 1

Tab 1 - Design Firm Experience & Tab 2 - Construction Firm Experience (both equal)

Tab 3 - Design Personnel Experience, Tab 4 - Construction Personnel Experience (both equal)

Tab 5 - Past Performance, Design & Tab 6 - Past Performance, Construction (both equal)

Tab 7 - Project Management Plan (PMP)

Tab 8 - Schedule

Tab 9 - Utilization of Small Business Concerns

SUBJECTIVELY EVALUATED FACTORS

Binder No. 2

Price - (approximately equal to the combined tab elements in Binder 1)

Note that the evaluation factors listed above, other than Price, are listed in descending order of importance. A low evaluation rating for any tab, or combination of different tabs, may cause the proposal to be evaluated as unsatisfactory. Binder No. 2, Price will be evaluated in accordance the requirements listed in paragraph 10, EVALUATION OF PRICE.

8. BINDERS 1 AND 2 - PROPOSAL REQUIREMENTS AND SUBMISSION FORMAT

a. Offerors shall submit the original along with five (5) copies of their proposal; each shall consist of a 3-ring binder with Tabs (dividers) separating each Tab component described herein. Please designate as “Binder No. 1” on the original and copies.

Binder No.1

Tab 1 – Design Firm Experience

Tab 2 - Construction Firm Experience

Tab 3 - Design Personnel Experience

Tab 4 - Construction Personnel Experience

Tab 5 - Past Performance, Design

Tab 6 - Past Performance, Construction

Tab 7 - Project Management Plan (PMP)

Tab 8 - Schedule

Tab 9 - Utilization of Small Business Concerns

b. Offerors shall submit the original and five (5) copies of their price proposal contained in a 3-ring binder and designated "Binder No. 2".

Binder 2

Single Tab with the Solicitation/Contract Form and Pricing Schedule (Section 00010) and Representations, Certifications and Other Statements of Offerors (Section 00600).

All proposals shall contain the evaluation requirements stated herein and every binder shall also contain: Table of Contents, List of Tables (if required), List of Figures (if required), List of Appendixes, and Name/Address/Telephone Number of the Offeror. Proposal clarity, organization (as requested in this solicitation) and cross referencing is mandatory. No material (information not part of proposal) shall be incorporated by reference. The offeror shall submit in the proposal the requested information specified herein.

Note: If you do not want the data submitted below disclosed by the Government, follow the procedure specified in Section 00100 INSTRUCTIONS, CONDITIONS AND NOTICES TO OFFERORS, paragraph: RESTRICTION ON DISCLOSURE AND USE OF DATA.

8.1. TAB 1 - DESIGN FIRM EXPERIENCE

8.1.1. Submission Requirements

The Design firm should demonstrate recent experience in designing projects of similar scope, complexity and size as this project. Similar scope and complexity include multi-level administrative facilities, admin/data facilities, data/ operations type facilities and information processing type facilities. Submit four (4) projects designed by your firm that most clearly illustrates your experience in designing facilities similar to the Consolidated Space Group Operations Facility or similar project as defined above. Project examples should be at least $4,000,000 in construction cost and completed within the past five (5) years of the date that proposals for the Consolidated Space Group Operations Facility are due. Project examples may include past experience as a prime design-build agent, or joint venture team, or design agent. If a joint venture has been formed for this contract only, include a brief description of previous experience with the Construction Contractor. **Indefinite-Delivery, Indefinite Quantity (IDIQ) Contracts, where numerous Task Orders are summed to meet the minimum construction dollar value identified herein, are not acceptable.** Example information should be on one or two typed sheets of paper and include the following for each facility: a description/scope; picture/photo; construction contract award amount; final construction cost; location; date when the project was started; original contract finish date and actual finish date. All summaries should contain the name, address, telephone and fax number of a representative of the owner (as well as one alternate individual not affiliated with your firm) familiar with your firm's experience on the project that can verify the experience cited.

In addition, these projects should demonstrate applicable Military Design experience and Design/Build experience. List on the one-two page examples any designers presented below in Tab 3 "Design Personnel" that participated in the design of constructed examples submitted above. No more than four (4) projects may be submitted. Submission of fewer than four (4) projects will reduce the proposer's rating in this category. Designed project examples may include (in descending order of importance):

- USAF Military design/build projects
- Military (Non-USAF) design-build projects
- Non-Military private sector design-build projects
- Military non design-build projects
- Private sector non design-build projects

8.1.2. Evaluation

The design firm's experience will be evaluated on projects similar to the Consolidated Space Group Operations Facility as defined in Paragraph 8.1.1. Examples that are similar (scope, complexity, size) and meet the dollar amount requirements will be evaluated more favorably. In

addition, more favorable ratings will be given for projects that are higher on the importance level as indicated in Paragraph. 8.1.1., with USAF Military design-build projects being the most favorable and Private Sector non design-build projects being the least favorable.

8.2. TAB - 2 CONSTRUCTION FIRM EXPERIENCE

8.2.1. Submission Requirements

In this tab, the offeror should submit four (4) project summaries of construction projects, which best illustrate the construction firms experience on construction of similar (scope, complexity, size) projects. Similar scope and complexity include multi-level administrative facilities, admin/data facilities, data/operations type facilities and information processing type facilities. Submit four (4) projects constructed by your firm that most clearly illustrates your experience as a prime construction contractor on facilities similar to the Consolidated Space Group Operations Facility. Project examples should be at least $4,000,000 in construction cost and completed within the past five (5) years of the date that proposals for the Consolidated Space Group Operations Facility are due. Project examples may include past experience as a prime design-build agent or joint venture team. If a joint venture has been formed for this contract only, include a brief description of the previous experiences as a joint venture team. **Indefinite-Delivery, Indefinite Quantity (IDIQ) Contracts, where numerous Task Orders are summed to meet the minimum construction dollar value identified herein, are not acceptable.** Example information should be on one or two typed sheets of paper and include the following for each facility constructed: a description/scope; picture/photo; construction contract award amount; final construction cost; location; date when the project was started; original contract finish date and actual finish date. All summaries should contain the name, address, telephone and fax number of a representative of the owner (as well as one alternate individual not affiliated with your firm) familiar with your firm's experience on the project that can verify the experience cited.

In addition, these constructed projects should demonstrate applicable Military Design/Build and Military Construction experience. List any key construction personnel presented below in Tab 4 "Construction Personnel" if they participated in the project examples submitted. No more than four (4) projects may be submitted. Submission of fewer than four (4) projects will reduce the proposer's rating in this category. Constructed project examples may include (in descending order of importance):

- USAF Military design/build projects constructed
- Military (Non-USAF) design/build projects constructed
- Military, non design/build projects constructed
- Non-Military design/build projects constructed
- Private sector non design/build projects constructed

8.2.2. Evaluation

Consolidated Space Group Ops Facility
Schriever AFB, CO
The prime construction firm's experience will be evaluated on completed construction projects similar to the Consolidated Space Group Operations Facility as defined in Paragraph 8.2.1. Examples that are similar in scope (scope, complexity, size) and meet the dollar amount requirements will be evaluated more favorably. In addition, more favorable ratings will be given for projects that are higher on the importance level as indicated in Paragraph. 8.2.1., with constructed USAF Military design-build projects being the most favorable and Private Sector non design-build constructed projects being the least favorable.

8.3. TAB 3 - DESIGN PERSONNEL EXPERIENCE

8.3.1. Submission Requirements

Submit one or two page resumes of lead and support design personnel for categories listed below who will work on this project. Resumes for each designer should have the following: Design Project Manager and lead designers should be registered professional architects or engineers (preferably registered in the state of Colorado) with a minimum of 5 years experience as a registered professional in design. Indicate design project experience with past firms up to current status over the last five (5) years. Include an Organizational Chart identifying each design team member proposed to work on the Consolidated Space Group Operations Facility. Resumes for each designer shall have associated **dates (beginning and ending)** for their submitted experience on projects cited. If because of reasons beyond the control of the design team, the named individuals are not able to fulfill this obligation, replacement personnel having similar education and experience, shall be presented for acceptance by the Contracting Officer.

- Project Manager (Registered Architect or Engineer)
- Registered Architect
- Registered Structural Engineer with training related to the 1997 National Earthquake Hazard Reduction Program (NEHRP)
- Registered Mechanical Engineer
- Registered Electrical Engineer
- Registered Fire Protection Engineer
- Registered Civil Engineer
- Registered Landscape Architect
- Interior Designer - Certified by the National Council of Interior Designers Qualifications (NCIDQ
- Corrosion Engineer

Design personnel resumes should include past examples of constructed projects the Project Manager and lead designers/design team have participated on (preferably together as a team). Project examples may include (in descending order of importance):

- Design on USAF Military design/build projects
- Design on Military (Non-USAF) design-build projects

Consolidated Space Group Ops Facility
Schriever AFB, CO

- Design on Non-Military private sector design-build projects
- Design on Military, non design-build projects
- Design on private sector non design-build projects

8.3.2. Evaluation

Qualifications of design personnel assigned to this project (design/build experience on past projects, design experience on past projects and professional registration) will be evaluated. Lead personnel will be evaluated more favorably for relatable military design-build project experience. In the list above, which indicates the descending order of importance for types of projects designed by personnel, more favorable designer personnel ratings are given for design experience on Military USAF design-build projects, and range to a least favorable rating given for non-military, non design-build design experience. More favorable ratings are awarded if lead personnel are registered in the state of Colorado. More favorable ratings are awarded for projects where personnel have previous experience with other members of the design team (i.e. Team members participating together on projects submitted under Tab 1.)

8.4. TAB 4 - CONSTRUCTION PERSONNEL EXPERIENCE

8.4.1. Submission Requirements

In this tab, the proposer should present the names and resumes for key construction personnel that will be assigned to this project. In addition, provide a summary of the duties and responsibilities of these individuals, which clearly indicate separate duties and responsibilities for each individual. As a minimum, this tab should include data on the following personnel: the Project Manager; the Project Superintendent; the CQC System Manager.

The proposal should clearly present the credentials of each person, and shall show that each meets the requirements listed below. Resumes should include examples of project experience (including what capacity the individual served on each project), as well as the **dates (beginning and ending)** employed on each project, and the monetary size of each project cited as experience. In addition, educational qualifications of the proposed personnel shall be submitted. If because of reasons beyond the control of the construction firm, the individuals named in this proposal are not able to be utilized on this project, replacement personnel with similar skills and experience shall be presented for acceptance and approval by the Contracting Officer. Replacement individuals for this project shall be required to have qualifications and experience meeting or exceeding those identified in the proposal. The following qualifications should be met:

- **Project Manager:** The Project Manager should be a registered engineer, registered architect or graduate construction manager and should have at least 5 years experience as a Project Manager on projects similar to the Consolidated Space Group Operations Facility.

- **Project Superintendent:** The Project Superintendent should be a graduate engineer or graduate construction manager with a minimum of 5 years experience as a Project Superintendent on facilities similar to the Consolidated Space Group Operations Facility; or an experienced construction person with a minimum of 7 years experience as a Project Superintendent on projects similar to the Consolidated Space Group Operations Facility.

- **Contractor Quality Control (CQC) System Manager:** The Contractor Quality Control System (CQC) Manager should be a graduate engineer with a minimum of 3 years experience as a CQC System Manager on projects similar to the Consolidated Space Group Operations Facility; or an experienced construction person with a minimum of 5 years experience as a CQC System Manager on projects similar to the Consolidated Space Group Operations Facility.

8.4.2. Evaluation

Qualifications of key construction personnel assigned to this project will be considered. More favorable evaluation ratings will be given for military construction project experience, longevity of experience at the position being proposed and education. Prior experience on military construction projects is preferred and will be evaluated more favorably. In addition, more favorable evaluations ratings will be given for longevity of experience at the position being proposed and education.

8.5. TAB 5 - PAST PERFORMANCE, DESIGN

8.5.1. Submission Requirements

Submit past performance ratings. **All** Architect-Engineer Contract Administration Support System (ACASS) Performance Evaluations ratings for all Corps of Engineer projects designed by the proposer in the past five years should be submitted. For projects cited in Tab 1, which were constructed for other government entities, submit the performance appraisal sheets used by that government entity. For each project cited in Tab 1 not covered in the ACASS database, submit Form DD2631 (a blank copy is attached to this section). DD2631 shall be completed by an owner or owner's representative and not affiliated with your firm. If an offeror has no past performance ratings in ACASS, or other Design Performance Rating System used by other government entities and no Performance Evaluation sheets are available for private sector work, a neutral rating will be given. The government reserves the right to pull all copies of ACASS records contained in the Corps of Engineers ACASS database. Copies of records contained in the Corps of Engineers ACASS Database may be requested by fax on company letterhead at the following telefax number: (503) 808-4596.

8.5.2. Evaluation

Higher evaluation ratings may be awarded for Outstanding evaluations. In descending order, lower ratings may be given for past evaluations of Above Average, Satisfactory, Marginal, and Unsatisfactory. If an offeror has no past performance ratings in ACASS, Performance Evaluation Worksheets, or other Construction Performance Rating Systems, a neutral rating will be given. ACASS Ratings will be given more weight than equivalent performance ratings for other types of evaluations. The Government may, at its discretion, contact references cited to verify the information contained therein.

8.6. TAB 6 - PAST PERFORMANCE, CONSTRUCTION

8.6.1. Submission Requirements

Submit past performance ratings. **All** Construction Contract Administration Support System (CCASS) ratings for all Corps of Engineer projects constructed by the proposer in the past five years should be submitted. For projects cited in Tab 2, which were constructed for other government entities, submit the performance appraisal sheets used by that government entity. For each project cited in Tab 2 not covered in the CCASS database, submit Form DD2626 (a blank copy is attached to this section). DD2626 shall be completed by an owner or owner's representative and not affiliated with your firm. If an offeror has no past performance ratings in CCASS, or other Construction Performance Rating System used by other government entities and no Performance Evaluation sheets are available for private sector work, a neutral rating will be given. The government reserves the right to pull all copies of CCASS records contained in the Corps of Engineers CCASS database. Copies of records contained in the Corps of Engineers CCASS Database may be requested by fax on company letterhead at the following telefax number: (503) 808-4596.

8.6.2. Evaluation

Higher evaluation ratings may be awarded for Outstanding evaluations. In descending order, lower ratings may be given for past evaluations of Above Average, Satisfactory, Marginal, and Unsatisfactory. If an offeror has no past performance ratings in CCASS, Performance Evaluation Worksheets, or other Construction Performance Rating Systems, a neutral rating will be given. CCASS Ratings will be given more weight than equivalent performance ratings for other types of evaluations. The Government may, at its discretion, contact references cited to verify the information contained therein.

8.7. TAB 7 - PROJECT MANAGEMENT PLAN (PMP)

8.7.1. Submission Requirements

The offeror should provide a comprehensive PMP developed specifically for this project, which will become an integrated part of the resultant contract. The PMP should include an explanation

of the management approach for the construction team. It should clearly show how the prime contractor will manage the construction of the project to insure a well-coordinated quality product, completed on time and with a minimum amount of contract modifications. It should include: method of management of all sub-contractors, specific quality control procedures, phasing, schedule development and methods to be utilized to maintain the schedule, and an organization chart showing the inter-relationship of management and various team components, including the Corps of Engineers. In addition, it should address the acquisition of environmental permits in a timely fashion, safety, preparation and submission of As-Built documents upon construction completion, and contract close-out. The information in the PMP should make it clear that the offeror has the ability to deliver a quality product and effectively manage all subcontractors on the team, as well as the ability to coordinate all work throughout the construction phase. As a minimum, the PMP should address all of the following:

- Management Approach
- Quality Control Procedures
- Sub-Contractor Management
- Schedule development and procedures to maintain performance schedule
- Organization Chart showing inter-relationship of management and various team components.
- Acquisition of Environmental Permits
- Safety
- Preparation and submission of As-Built documents
- Contract close-out

8.7.2. Evaluation

The quality of the offeror's PMP will be evaluated. Higher evaluation ratings will be achieved for a PMP which addresses all items requested in a thorough and comprehensive manner, and that demonstrates an effective plan for construction and close-out of the project.

8.8. TAB 8 – SCHEDULE

8.8.1. Submission Requirements

The Offeror should propose the number of calendar days of construction required to complete the facility. Their schedule should consist of a two or three page schedule presenting the contractors schedule decision, and illustrated by a bar or gantt chart showing phasing of major items of work. The number of days proposed on the schedule must match that entered by the offeror on the SF 1442, Block 11, Page 00010-1 of the RFP. The number of days cannot exceed 540 calendar days. The number of days proposed by the Offeror will become a contract requirement for the successful Offeror. A Network Analysis System (NAS) or Critical Path Method (CPM) schedule is **NOT** required for this Tab.

8.8.2. Evaluation

The offeror's proposed construction duration and schedule will be evaluated. The number of days may not exceed 540 calendar days. Higher evaluation ratings may be given for shorter construction durations, while lower ratings may be given for longer construction durations. In addition, schedules depicting an unrealistically short construction duration may be given lower ratings than those showing a more realistic duration.

8.9. TAB 9 – UTILIZATION OF SMALL BUSINESS CONCERNS

8.9.1. Submission Requirements

The Offeror, **if not a Small Business Concern**, should demonstrate through submission of a narrative the offeror's plan to identify, commit and utilize Small Business **(SB)**, Small Disadvantaged Business **(SDB)**, HUBZone Small Business, Women-owned Small Business **(WOSB)** concerns, and Service-Disabled Veterans **(SDV)** as team members, subcontractors and/or suppliers in the performance of the resultant contract of this solicitation. **Note that this Tab is not requesting a Sub-Contracting Plan.** It is the policy of the U.S. Army Corps of Engineers, Omaha District (CENWO) that small business concerns have the maximum practicable opportunity to participate in performing contracts let by the Contracting Activity (CENWO-CT). It is further the policy of CENWO that its prospective prime contractors **(Large Business Only)** demonstrate the extent they plan to utilize small business concerns in any resultant contract and provide assurance in its offer that small business concerns will have maximum subcontracting opportunities in its prime contracts. **If the contractor is a Small Business Concern, this tab may include a single sheet stating that the contractor is a Small Business Concern, in lieu of compiling the information requested herein.** The evaluation of utilization and participation of small business concerns is separate and distinct from the requirement at Federal Acquisition Regulation (FAR) Clause 52.219-9, Small Business Subcontracting Plan.

8.9.1.1. Definitions:

a. Small Business Concerns. For the purpose of this section, small business concerns refer to Small Business, Small Disadvantaged Business, Women-owned Small Business, HUBZone Small Business, and Service-Disabled Veterans.

b. Prime Contractor. For the purpose of this section, a prime contractor refers to both large and small contractors.

c. Offeror. For the purpose of this section, offeror refers to both large and small contractors.

d. Target. "Target" is the term the U.S. Army Corps of Engineers uses to replace “floor” and or “Goal”. It represents the minimum level for small business performance.

8.9.1.2. Tab 9 Required Information:

This tab should include the following information for purposes of proposal evaluation:

a. Development of Percentage Floors. Development of percentage floors based on planned subcontracting which is challenging yet realistic. **(Applicable to Large Business Only).** The following floors are considered reasonable and obtainable for projects awarded in Fiscal Year 2003:

- 57.2% of planned subcontracting dollars to be placed with all small business concerns.
- 8.9% of planned subcontracting dollars to be placed with those small business concerns owned and controlled by socially and economically disadvantaged individuals.
- 8.1% of planned subcontracting dollars to be placed with women-owned small business concerns.
- 3.0% of planned subcontracting dollars with Severely Disabled Veterans Small Business concerns.
- 3.0% of planned subcontracting dollars with Hubzones Small Business Concerns.

b. Past Performance in Meeting Small Disadvantaged Business Floors. Demonstrate how floors for Small Disadvantaged Business (SDB) participation were satisfied on previous contracts, extent to which the prime has historically been successful in establishing realistic yet challenging goals, and evidences the ability to achieve them. The Offeror should submit data on Past Performance in meeting small business goals which will demonstrate how goals for small business concerns participation on previous contracts was satisfied. The data to be provided should include: (1) Client/Customer (2) Contract/Identification Number (3) Project Description (4) Contract Amount (5) Goals established for that project (6) Actual percentages met for that contract (7) Reference or Point of Contract (to include address and telephone number).

c. Demonstrate utilization and participation of small business concerns, clearly stated factors that demonstrate strong commitments to use SB, SDB, WOSB, SDVOSB, and HubZone as team members, subcontractors, and/or suppliers. The proposal should clearly state positive steps taken to demonstrate a strong commitment to use small business concerns. Enforceable

commitments to use small business concerns will be weighed more heavily than non-enforceable ones.

d. Description of supplies and services to be subcontracted and planned for subcontracting to SBs, SDBs, WOSBs , SDVOSBs, and HUB-Zones.

e. Assurances that the offeror will include the clause at FAR 52.219-8, Utilization of Small Business Concerns in all subcontracts that offer further subcontracting opportunities, and that the offeror will require subcontractors (including small business concerns) that receive subcontracts in excess of $500,000 ($1,000,000 for construction) to adopt a small business participation program similar to the requirements of the resultant contract.

8.9.2. Evaluation

Proposals will be evaluated on their proposed plan for the following areas. Those firms providing all information requested, demonstrating a strong commitment to utilization of Small Business, and demonstrating past performance in meeting small business goals will be given higher ratings than those that do not.

a. Development of Percentage targets.
b. Past Performance in Meeting Small Business targets.
c. Demonstration of a Strong Commitment to Utilization and Participation of Small Business Concerns
d. Description of Supplies and Services to be Subcontracted
e. Assurances that the offeror (if a large business) will include the FAR Clause 52.219-8 Utilization of Small Business Concerns in all Subcontracts

If the offeror is a Small Business Concern, they may include a single sheet stating that the offeror is a Small Business Concern, in lieu of compiling the information requested herein. Small businesses will be given the maximum rating for this factor.

9. BINDER NO. 2 - PRICE

9.1.1. Submission Requirements

The offeror should submit **only an original** of the following information **in a separate binder**. Five copies of the information in this Tab are **not** required and should not be submitted. The binder shall contain the following information:

a. Section 00010, Solicitation/Contract Form and Pricing Schedule. Include the completed SF Form 1442 (Pages 00010-1 and 00010-2) of the RFP, along with the completed

Pricing Schedule (Page 00010-3, 4). The total cost for the design and construction will be considered for evaluation, including all options. Proposed price for the design and construction of this project will be considered for evaluation and assist in establishment of the competitive range (if one is established).

b. Section 00600, Representations, Certifications and Other Statements of Offerors. These items are not considered for evaluation, but are required as part of the offeror's proposal of this solicitation. The information requested in this Section needs to be fully completed. The submitted information will be reviewed for completeness by Contracting Personnel.

c. Pre-Award Survey Information (Local Provision) (Sep 93).
In accordance with FAR Clause 52.228-15 PERFORMANCE AND PAYMENT BONDS, the following information should be submitted with each offer. Submission of this information will expedite the award process.

(1) Financial:

a. Name, address, and fax number of Financial Institution
b. Name and phone number of finance individual (primary and alternate) to be contacted for information

(2) Bonding Information: Provide the name, address, regular phone number and fax number of the offeror's Surety Company.

d. Small Business Sub-Contracting Plan. If your firm is a large business and your proposal **exceeds $1,000,000** or more for construction, a Small Business Subcontracting Plan is required at the time your offer is submitted. A SAMPLE Small Business Subcontracting Plan is attached to this section of the solicitation. This plan is not a part of the technical evaluation. However, an acceptable Sub-Contracting plan must be approved and in place prior to contract award. Submission with the proposal will expedite contract award. The plan will be reviewed for compliance with the established criteria in Appendix CC, which is attached to this section of the solicitation.

9.1.2. Evaluation

Price will be subjectively evaluated for Best Value and Realism by the Government, considering total cost of the basic and all option items to reach the best value for the Government, price and other factors considered.

(a) Best Value is defined as the expected outcome of an acquisition, that in the Government's estimation, provides the greatest overall benefit in response to the requirement, Technical and Price factors considered.

(b) Realism is defined as costs in an offeror's proposal considered realistic for the work to be performed, reflecting a clear understanding of the requirements, and consistent with the various elements of the offeror's technical proposal (all Tabs other than Price). Note that all

evaluation factors other than Price, when combined, are approximately equal to the Price evaluation.

Other elements requested in Binder No. 2 will not be used in the Best Value Analysis, but are required as part of the proposal.

10. COMPETITIVE RANGE

Upon completion of proposal evaluation, if discussions are determined to be needed, the Government may establish a competitive range for the purpose of conducting written discussion. The competitive range shall be determined on the basis of the factors stated in the solicitation and shall include all proposals that have a reasonable chance of being selected for award. **The Government intends to award a contract on the basis of initial offers received, without discussions.** Therefore, each initial offer should contain the offeror's best terms from a cost or price and technical standpoint. Notwithstanding, the Government may conduct written discussions with all responsible offerors who submit proposals and are considered within the competitive range. Offerors submitting proposals determined outside of the competitive range (lacking a reasonable chance of being selected for contract award) will be notified in writing at the earliest practicable time.

11. CLARIFICATIONS AND DISCUSSIONS.

a. Clarifications**.** Clarification is defined in Paragraph 2(d)(6) above. During the evaluation, if a proposal requires clarification for the Board to complete its evaluation, a written list of questions and/or comments to be discussed with the offeror will be provided to the offeror by the Contracting Representative or Contracting Officer. Any request for clarifications will be issued by letter, by the Contracting Officer. All contact with offerors will be through the Contracting Division. There will be no direct contact by the SSEB with any offeror(s).

b. Communications. Communications as defined in paragraph 6(e)(4) above, between the Government and offerors, after receipt of proposals, leading to establishment of the competitive range will not occur without the participation of the Contracting Officer.

c. Discussions. If discussions, as defined in paragraph 6(e)(6) above are necessary, written and/or verbal, they will be conducted with all firms in the competitive range once a written Determination to hold such discussions has been approved by the Contracting Officer. FAR 15.306(d)(3) and the Comptroller General Decisions indicate that all content of discussions are a matter within the Contracting Officer's judgment. Discussions involve an exchange of information essential to determining the acceptability of a proposal. During the exchange of information, offerors must be informed of all deficiencies and significant weaknesses in their

proposals and offered an opportunity to revise their proposals. No technical leveling, transfusion or auction techniques shall result from discussions. Discussions will be concluded as of the date specified for receipt of a Final Revised Proposal from those offerors determined to be in the competitive range in accordance with FAR 15.306(c)(2).

12. FINAL PROPOSAL REVISIONS

If discussions are held, upon their completion the Government shall issue to all Offerors within the competitive range a request for final proposal revisions specifying the exact date and time for submission of the revision. Any verbal revisions to proposals made during the course of discussions must be included in the offeror's written Final Revised Proposal. Any verbal revisions not included in the final revision will not be considered in re-evaluating the proposals. Any verbal request for a Final Revised Proposal shall be confirmed in writing. The confirmation shall include:

(1) Notice that discussions are concluded.
(2) Notice that this is the opportunity to submit a Final Revised Proposal.
(3) Establishment of a common cutoff date and time that allows the offerors reasonable opportunity for submission of written Proposal revisions.
(4) Notice that Proposal Revisions, and modifications thereto, must be received by the date, time, and in the place specified in the notice, or they are subject to the Late Offers provision in the solicitation in Section 00100.

Following the evaluation of final proposal revisions, the Government will select the offeror whose initial and final proposal revision presents the Best Value and is most advantageous, considering only the factors included in the solicitation, to the Government.

13. DEBRIEFING

Each offeror, successful or unsuccessful, will have the opportunity, in accordance with Federal Acquisition Regulation (FAR) 15.505 and 15.506, to receive one debriefing. Offerors are required to submit a written request for debriefing and discussion of the evaluation of its proposal within three(3) calendar days after receipt of notice of award. The debriefing of all offerors, successful or unsuccessful, will be conducted by the Contracting Officer in accordance with the FAR. Each offeror shall be provided only one debriefing, either post award or pre-award, at their choosing. The Contracting Specialist will coordinate and schedule the debriefings. Debriefing participation will include the Contracting Officer, chairperson of the SSEB, and Contracting Specialist with additional support from other members of the SSEB as required.

PERFORMANCE EVALUATION (CONSTRUCTION)

1. CONTRACT NUMBER

2. CEC NUMBER

IMPORTANT: Be sure to complete Part III - Evaluation of Performance Elements on reverse.

PART I - GENERAL CONTRACT DATA

3. TYPE OF EVALUATION *(X one)*

☐ INTERIM *(List percentage _____%)* ☐ FINAL ☐ AMENDED

4. TERMINATED FOR DEFAULT ☐

5. CONTRACTOR *(Name, Address, and ZIP Code)*

6.a. PROCUREMENT METHOD *(X one)*

☐ SEALED BID ☐ NEGOTIATED

b. TYPE OF CONTRACT *(X one)*

☐ FIRM FIXED PRICE ☐ COST REIMBURSEMENT

☐ OTHER *(Specify)*

7. DESCRIPTION AND LOCATION OF WORK

8. TYPE AND PERCENT OF SUBCONTRACTING

9. FISCAL DATA ▶	a. AMOUNT OF BASIC CONTRACT $	b. TOTAL AMOUNT OF MODIFICATIONS $	c. LIQUIDATED DAMAGES ASSESSED $	d. NET AMOUNT PAID CONTRACTOR $
10. SIGNIFICANT DATES ▶	a. DATE OF AWARD	b. ORIGINAL CONTRACT COMPLETION DATE	c. REVISED CONTRACT COMPLETION DATE	d. DATE WORK ACCEPTED

PART II - PERFORMANCE EVALUATION OF CONTRACTOR

11. OVERALL RATING *(X appropriate block)*

☐ OUTSTANDING ☐ ABOVE AVERAGE ☐ SATISFACTORY ☐ MARGINAL ☐ UNSATISFACTORY *(Explain in Item 20 on reverse)*

12. EVALUATED BY

a. ORGANIZATION *(Name and Address (Include ZIP Code))*		b. TELEPHONE NUMBER *(Include Area Code)*
c. NAME AND TITLE	d. SIGNATURE	e. DATE

13. EVALUATION REVIEWED BY

a. ORGANIZATION *(Name and Address (Include ZIP Code))*		b. TELEPHONE NUMBER *(Include Area Code)*
c. NAME AND TITLE	d. SIGNATURE	e. DATE

14. AGENCY USE *(Distribution, etc.)*

PART III - EVALUATION OF PERFORMANCE ELEMENTS

N/A = NOT APPLICABLE O = OUTSTANDING A = ABOVE AVERAGE S = SATISFACTORY M = MARGINAL U = UNSATISFACTORY

15. QUALITY CONTROL	N/A	O	A	S	M	U
a. QUALITY OF WORKMANSHIP						
b. ADEQUACY OF THE CQC PLAN						
c. IMPLEMENTATION OF THE CQC PLAN						
d. QUALITY OF QC DOCUMENTATION						
e. STORAGE OF MATERIALS						
f. ADEQUACY OF MATERIALS						
g. ADEQUACY OF SUBMITTALS						
h. ADEQUACY OF QC TESTING						
i. ADEQUACY OF AS-BUILTS						
j. USE OF SPECIFIED MATERIALS						
k. IDENTIFICATION/CORRECTION OF DEFICIENT WORK IN A TIMELY MANNER						

16. EFFECTIVENESS OF MANAGEMENT	N/A	O	A	S	M	U
a. COOPERATION AND RESPONSIVENESS						
b. MANAGEMENT OF RESOURCES/ PERSONNEL						
c. COORDINATION AND CONTROL OF SUBCONTRACTOR(S)						
d. ADEQUACY OF SITE CLEAN-UP						
e. EFFECTIVENESS OF JOB-SITE SUPERVISION						
f. COMPLIANCE WITH LAWS AND REGULATIONS						
g. PROFESSIONAL CONDUCT						
h. REVIEW/RESOLUTION OF SUBCONTRACTOR'S ISSUES						
i. IMPLEMENTATION OF SUBCONTRACTING PLAN						

17. TIMELY PERFORMANCE						
a. ADEQUACY OF INITIAL PROGRESS SCHEDULE						
b. ADHERENCE TO APPROVED SCHEDULE						
c. RESOLUTION OF DELAYS						
d. SUBMISSION OF REQUIRED DOCUMENTATION						
e. COMPLETION OF PUNCHLIST ITEMS						
f. SUBMISSION OF UPDATED AND REVISED PROGRESS SCHEDULES						
g. WARRANTY RESPONSE						

18. COMPLIANCE WITH LABOR STANDARDS						
a. CORRECTION OF NOTED DEFICIENCIES						
b. PAYROLLS PROPERLY COMPLETED AND SUBMITTED						
c. COMPLIANCE WITH LABOR LAWS AND REGULATIONS WITH SPECIFIC ATTENTION TO THE DAVIS-BACON ACT AND EEO REQUIREMENTS						
19. COMPLIANCE WITH SAFETY STANDARDS						
a. ADEQUACY OF SAFETY PLAN						
b. IMPLEMENTATION OF SAFETY PLAN						
c. CORRECTION OF NOTED						

20. REMARKS *(Explanation of unsatisfactory evaluation is required. Other comments are optional. Provide facts concerning specific events or actions to justify the evaluation. These data must be in sufficient detail to assist contracting officers in determining the contractor's responsibility. Continue on separate sheet(s), if needed.)*

PERFORMANCE EVALUATION
(ARCHITECT-ENGINEER)

A-E CONTRACTOR I.D. NUMBER *(For ACASS use only)*

1. A-E CONTRACT NUMBER

2. CONSTRUCTION CONTRACT NUMBER

IMPORTANT: Be sure to complete back of form. If additional space is necessary for any item, use Remarks section on back.

3. TYPE OF EVALUATION

a. PHASE OF COMPLETION
☐ INTERIM (_____ %) ☐ FINAL

b. COMPLETION *(X one)*
☐ DESIGN ☐ ENGINEERING SERVICES ☐ CONSTRUCTION

c. X IF APPLICABLE
☐ TERMINATION *(Explain in Remarks)*

4. PROJECT NUMBER

5. DELIVERY ORDER NO.(S) *(if applicable)*

6. NAME AND ADDRESS OF A-E CONTRACTOR

7a. PROJECT TITLE AND LOCATION

7b. DESCRIPTION OF PROJECT IF NOT EXPLAINED BY TITLE

8. NAME, ADDRESS AND PHONE NUMBER OF OFFICE RESPONSIBLE FOR:

a. SELECTION OF A-E CONTRACTOR

b. NEGOTIATION/AWARD OF A-E CONTRACT

c. ADMINISTRATION OF A-E CONTRACT

d. ADMINISTRATION OF CONSTRUCTION CONTRACT

9. A-E CONTRACT DATA *(Items 9d thru 9g are not applicable during construction unless there are modifications to the A-E contract.)*

a. TYPE OF WORK *(Design, study, etc.)*

b. TYPE OF CONTRACT
☐ FIRM FIXED-PRICE
☐ COST-REIMBURSEMENT
☐ INDEFINITE DELIVERY/INDEFINITE QUANTITY (ID/IQ)
☐ TASK ORDER UNDER ID/IQ
☐ OTHER *(Specify)*

c. PROJECT COMPLEXITY
☐ DIFFICULT ☐ ROUTINE

d. CONTRACT OR TASK ORDER AMOUNT

(1) INITIAL FEE	(2) CONTRACT OR TASK ORDER MODIFICATIONS		(3) TOTAL FEE
	NO.	AMOUNT	
$		$	$

e. CONTRACT OR TASK ORDER AWARD DATE

f. NEGOTIATED CONTRACT OR TASK ORDER COMPLETION DATE *(or number of days) (Including extensions)*

g. ACTUAL CONTRACT OR TASK ORDER COMPLETION DATE *(or number of days)*

10. CONSTRUCTION CONTRACT DATA *(Not applicable at completion of design or engineering services not involving construction.)*

a. CONSTRUCTION COSTS	(1) AUTHORIZED CONSTRUCTION COST	(2) A-E ESTIMATE FOR BID ITEMS AWARDED	(3) AWARD AMOUNT
	$	$	$

b. DATA AT TIME OF CONSTRUCTION COMPLETION *(Completion date _____)*	NUMBER	TOTAL COST
(1) CONSTRUCTION MODIFICATIONS		$
(2) CONSTRUCTION MODIFICATIONS ARISING FROM DESIGN DEFICIENCIES		$

11. A-E LIABILITY ☐ NONE ☐ UNDETERMINED ☐ PENDING $ ☐ SETTLEMENT $

12. OVERALL RATING
☐ EXCEPTIONAL ☐ SATISFACTORY ☐ UNSATISFACTORY
☐ VERY GOOD ☐ MARGINAL

13. RECOMMENDED FOR FUTURE CONTRACTS?
☐ YES ☐ CONDITIONALLY
☐ NO *(Explain "No" or "Conditionally" in Remarks.)*

14a. NAME, TITLE AND OFFICE OF RATING OFFICIAL

TELEPHONE NUMBER:

b. SIGNATURE

c. DATE

15a. NAME, TITLE AND OFFICE OF REVIEWING OFFICIAL

TELEPHONE NUMBER:

b. SIGNATURE

c. DATE *(Official Report date)*

AGENCY USE: *(Distribution, etc.)*

16. QUALITY OF A-E SERVICES BY DISCIPLINE *(Completion mandatory for both DESIGN and CONSTRUCTION phases and Engineering Services)*

a. DISCIPLINES *(If applicable)*	DESIGN/SERVICES					CONSTRUCTION				
	EXCEP-TIONAL	VERY GOOD	SATIS-FACTORY	MARGINAL	UNSATIS-FACTORY	EXCEP-TIONAL	VERY GOOD	SATIS-FACTORY	MARGINAL	UNSATIS-FACTORY
Architectural										
Structural										
Civil										
Mechanical										
Electrical										
Fire Protection										
Surveying, Mapping, & Geospatial Information Svcs.										
Cost Estimating										
Value Engineering										
Environmental Engineering										
Geotechnical Engineering										
Master Planning										
Hydrology										
Chemical Engineering										
Geology										
Chemistry										
Risk Assessment										
Safety/Occupational Health										
Hydrographic Surveying										

17. DESIGN PHASE OR ENGINEERING SERVICES *(Quality of A-E Services Evaluation)*

ATTRIBUTES *(If applicable)*	EXCEP-TIONAL	VERY GOOD	SATIS-FACTORY	MARGINAL	UNSATIS-FACTORY
Thoroughness of Site Investigation/Field Analysis					
Quality Control Procedures and Execution					
Plans/Specs Accurate and Coordinated					
Plans Clear and Detailed Sufficiently					
Management and Adherence to Schedules					
Meeting Cost Limitations					
Suitability of Design or Study Results					
Solution Environmentally Suitable					
Cooperativeness and Responsiveness					
Quality of Briefing and Presentations					
Innovative Approaches/Technologies					
Implementation of Sm. Business Subcontracting Plan					

16b. DISCIPLINE, NAME AND ADDRESS OF KEY CONSULTANT(S) *(If applicable)*

18. HOW MANY 100% FINAL RESUBMITTALS WERE REQUIRED BECAUSE OF POOR A-E PERFORMANCE?

19. CONSTRUCTION PHASE *(Quality of A-E Services Evaluation)*

ATTRIBUTES *(If applicable)*	EXCEP-TIONAL	VERY GOOD	SATIS-FACTORY	MARGINAL	UNSATIS-FACTORY
Plans Clear and Detailed Sufficiently					
Drawings Reflect True Conditions					
Plans/Specs Accurate and Coordinated					
Design Constructibility					
Cooperativeness and Responsiveness					
Timeliness and Quality of Processing Submittals					
Product & Equipment Selections Readily Available					
Timeliness of Answers to Design Questions					
Field Consultation and Investigations					
Quality of Construction Support Services					

20. REMARKS *(Attach additional sheet(s) or documentation if necessary)*

Consolidated Space Group Ops Facility
Schriever AFB, CO

SAMPLE SMALL BUSINESS SUBCONTRACTING PLAN

NOTICE TO BIDDERS: If your firm is a large business and your bid exceeds $500,000 or more for services or $1,000,000 for construction, your attention is directed to the following provisions contained in the solicitation:

52.219-8, Utilization of Small Business Concerns (Oct 2000)
52.219-9, Small Business Subcontracting Plan (Jan 2002)
52.219-16, Liquidated Damages - Subcontracting Plan (Jan 1999)
52.226-1, Utilization of Indian Organizations and Indian-Owned Economic Enterprises (Jun 2000)

For your information, the United Army Corps of Engineers considers the following goals reasonable and achievable for fiscal year and during the performance of the resultant contract.

a. 61.4% of planned subcontracting dollars will be placed with all small business concerns.

b. 9.1% of planned subcontracting dollars will be placed with those small business concerns owned and controlled by socially and economically disadvantaged individuals.

c. 5% of planned subcontracting dollars will be placed with those small business concerns owned and controlled by women.

d. 3% of planned subcontracting dollars will be placed with those small business concerns owned and controlled by service disable veterans.

e. 2.5% of planned subcontracting dollars will be placed with those small business concerns owned and controlled by certified Hubzone concerns.

Goals included in any proposed subcontracting plan should be at least equal to those indicated above. If lesser goals are proposed, you must substantiate how the proposed plan represents the firm best effort to comply with the terms and conditions of the solicitation. Bidders are highly encouraged to become familiarize with the intent of the solicitation provisions and the elements of the subcontracting plan.

The subcontracting plan must contain, at a minimum, the elements set forth in solicitation provision 52.219-9. Proposed plans will be reviewed to ensure the plan represents the firm's best efforts to maximize subcontracting opportunities for small, small disadvantaged and women-owned businesses. Subcontracting plans require Contracting Officer approval prior to contract award. The apparent low bidder must submit an acceptable subcontracting plan within five (5) calendar days after bid opening

Consolidated Space Group Ops Facility
Schriever AFB, CO
(a longer period maybe granted by the Contracting Officer upon request) to the Contracting Activity.

Should the successful offeror fail to submit an acceptable subcontracting plan within the time limit prescribed by the Contracting Officer, offer bid will be considered ineligible for award. The approved subcontracting plan (to include goals) will become a material part of the contract. An example of a format of a subcontracting plan is attached for your information. The attached ***plan is an example only*** and should not be construed as an acceptable subcontracting plan. Any format will be acceptable provided the plan addresses each element as required by the Federal Acquisition Regulations and its supplements.

Should you have any questions or need assistance in developing your plan, please contact the assigned Contract Specialist or the District's Deputy for Small Business at 402-221-4110 or fax your inquiries to 402-221-4199.

EXAMPLE
SMALL, SMALL DISADVANTAGED AND WOMEN-OWNED
SMALL BUSINESS SUBCONTRACTING PLAN

DATE: _____

CONTRACTOR: _____

ADDRESS:_____

PHONE NO:_____

PROJECT TITLE:_____

SOLICITATION NO: _____

1. In accordance with the contract clauses at 52.219-8 and 52.219-9, (name of contractor) submits the following Subcontracting Plan for Small, Small Disadvantaged, and Women-owned Business Concerns.

2. Corresponding dollar values for percentages cited in para. 3:

a. Total contract amount is $_____.

b. Total dollars planned to be subcontracted (to all types of businesses): $_____.

c. Total dollars planned to be subcontracted to small business concerns: $_____.

d. Total dollars planned to be subcontracted to small disadvantaged business concerns: $_____.

e. Total dollars planned to be subcontracted to small woman-owned business concerns: $_____.

f. Total dollars planned to be subcontracted to historical black colleges and minority institutions: $_____.

3. The following percentage goals (expressed in terms of a percentage of total planned subcontracting dollars) are applicable to the contract awarded under the solicitation cited above.

a. The total estimated percentage of all planned subcontracting to all types of business concerns under this contract is: _____%.

b. Small Business Concerns: _____% of total planned subcontracting dollars under this contract will go to subcontractors who are small business concerns including 3c. and 3d.

c. Small Disadvantaged Business Concerns: _____% of total planned subcontracting dollars under this contract will go to subcontractors who are small disadvantaged individuals. **NOTE:** Women-owned businesses are not considered a small disadvantaged business. Do not include subcontract awards to women-owned businesses in your calculations for paragraph 3c unless the firm meets the definition of a small disadvantaged business.

d. Woman-Owned Small Business Concerns:_____% of total planned subcontracting dollars under this contract will go to subcontractors who are woman-owned small businesses.

e. HubZone Concerns: _____% of total planned subcontracting dollars under this contract will go to subcontractors who are hubzones.

f. Service Disable Veterans: ____% of total planned subcontracting dollars under this contract will go to subcontractors who are service disable veterans.

g. Veterans: ____% of total planned subcontracting dollars under this contract will go to subcontractors who are veterans.

h. Historical Black Colleges and Minority Institutions:_____% of total planned subcontracting dollars under this contract will go to subcontractors who historical black colleges and/or minority institutions.

4. The principal items or areas we will subcontract under this contract are (NOTE: **Construction contractors remember to include materials/supplies** when developing plan. Also, list each subcontracted task by Division and Section number):

_____

_____

_____

a. Of the items or areas stated in 4; the following are planned to be subcontracted to

Small Businesses:

_____

_____

_____

b. Of the items or areas stated in 4.a; the following are planned to be subcontracted to Small Disadvantaged Businesses:

_____

_____

_____

c. Of the items or areas stated in 4.a; the following are planned to be subcontracted to Small Women-Owned Businesses:

_____

_____

_____

****NOTE: SEE LAST PAGE IF THIS SOLICITATION HAS OPTIONS** (DELETE THIS STATEMENT FROM YOUR PLAN)******

5. Provide a description of the method your firm used to develop the subcontracting goals in paragraph 2:

_____

_____

_____

_____

_____

6. Indirect costs were ( ) were not ( ) used in establishing subcontracting goals. **If indirect costs are included in your goals, furnish a description of the method used to determine the proportionate share of indirect costs to be incurred with (i) small business concerns (ii) small disadvantaged business concerns and (iii) women-owned.**

7. The following individual will administer this Subcontracting Plan on behalf of (name of contractor):

Name: Title:

Address:

Telephone:

The aforementioned individual's specific duties will include, but is not limited to:

a. Developing and maintaining source lists of small, small disadvantaged and women-owned small business concerns. Sources used are the Small Business Administration's Procurement Automated Source System (PASS), the National Minority Purchasing Council Vendor Information Service, Minority Business Development Agency, US Department of Commerce, Local Minority Business Development Centers, Economic Development Centers, and National Center for American Indian Enterprise Development.

b. Assuring the inclusion of small, small disadvantaged, and women-owned small business concerns in all solicitations for products or services which they are capable of providing; and ensuring that all solicitations are structured to permit the maximum possible participation by small, small disadvantaged and women-owned small business concerns.

c. Establishing and maintaining records of all subcontract awards to ensure appropriate documentation of non-selection of bids submitted by a small, small disadvantaged business, or women-owned small business concerns.

d. Preparing and submitting the Subcontracting Report for Individual Contracts (SF 294) and the Summary Subcontract Report (SF 295) in accordance with instructions provided, and coordinating and preparing for all compliance reviews by Federal agencies.

e. Promoting activities necessary to further the intent of the subcontracting plan. Activities include motivational training of purchasing personnel; attendance at workshops, seminars and trade fairs conducted by or on behalf of small business and/or

small disadvantaged and/or women-owned small business concerns; and general cooperation with members of the small, small disadvantaged and women-owned small business concerns or their representatives.

8. The following steps will be taken to ensure that small, small disadvantaged, and women-owned small business concerns receive notice of and have an equitable opportunity to compete for intended awards of subcontracts and/or purchase orders for the products and/or services describe in paragraph 4 above:

a. Sources will be requested through SBA's PASS system, business development organizations, minority and small business trade associations and at small, minority and women-owned small business procurement conferences; sources will be contacted; and bidding materials will be provided to all responding parties expressing an interest.

b. The firm will conduct and maintain internal motivational training to guide and encourage purchasing personnel to maintain source lists and guides to small, small disadvantaged, and women-owned small business concerns. Purchasing activities will be monitored to ensure sufficient time is allowed for interested bidders to prepare bids and to ensure continuous compliance with the approved Subcontracting Plan.

9. [Name of contractor] agrees that the clause entitled "Utilization of Small, Small Disadvantaged and Women-Owned Business Concerns" will be included in all subcontracts that offer further subcontracting opportunities. All subcontractors, except small business concerns, who receive subcontracts in excess of $500,000 ($1,000,000 in the case of construction) will be required to adopt a plan similar to this one. Such plans will be reviewed to assure that all minimum requirements of an acceptable subcontracting plan have been satisfied. The acceptability of proposed goals shall be determined on a cases-by-case basis depending on the supplies/services involved, the availability of potential small, small disadvantaged, and women-owned subcontractors, and prior experience. Once approved and implemented, plans will be monitored through the submission of periodic reports or, as time and availability of funds permit, periodic visits to subcontractors facilities to review applicable records and subcontracting program progress.

10. The Firm agrees to submit periodic reports and cooperate in any studies or surveys required by the Contracting Activity or Small Business Administration to determine the extent of the firm compliance with the subcontracting plan.

11. (Name of Contractor) agrees to maintain at least the following types of records to document compliance with the Subcontracting Plan:

a. The names of all organizations, agencies, and associations contacted for small, small disadvantaged, and women-owned small business sources, along with records of

attendance at conference, seminars and trade fairs where additional sources were developed.

b. Source lists, guides, and other data identifying small business concerns, small disadvantaged business concerns and women-owned small business concerns.

c. Records of subcontracts award in excess of $100,000 will demonstrate how small business concerns, small disadvantaged business concerns and women-owned business concerns were solicited or provide an explanation as to why these business concerns were not considered for subcontracting opportunities.

d. . Records of subcontract award data to include subcontractor's name and address, to be kept on a contract-by-contract basis.

e. Minutes of internal motivational and training meetings held for the guidance and encouragement of purchasing personnel, and records of all monitoring activities performed for compliance evaluation.

f. Copies of SF 294 and SF 295 showing date and place of filing and copies of all other reports or results of reviews conducted by the contracting agency or other interested agencies of the Federal government to monitor our compliance with this Subcontracting Plan.

12. (Name of Contractor) will submit a SF 295, Summary Subcontract Report, on Corps of Engineers projects only. The SF 295 shall be completed and distributed in accordance with the Corps of engineers Supplemental Instructions. (Name of Contractor) will not report Corps of Engineers projects through any other Agency unless authorized by the Contracting Officer.

BY: _____

_____
Signature and Title of CEO
Company Name

Date: _____

NOTE: If this solicitation has options, the plan must contain separate goals for *each* option. EXAMPLE:

	Dollars	Percentage

1. Option #_____total: $_____ _____

2. Total to be subcontracted to all businesses: $_____ _____

a. Subcontracted to Small Business: $_____ _____

b. Subcontracted to Small Disadvantaged Businesses: $_____ _____

c. Subcontracted to Women-Owned Small Businesses: $_____ _____

d.. Subcontracted to Historical Black Colleges and Minority Institutions: $_____ _____

APPENDIX CC
SUBCONTRACTING PLAN CHECKLIST

1. Policy statement or evidence of internal guidance to company buyers recognizing commitment to Pub.L. 99-661, Section 1207, and Pub.L. 100-180, Section 806.

0 No written policy statement in plan.

1-2 Plan includes a general policy, but no evidence of recognition of special emphasis being placed on subcontracting with SDBs, HBCUs and MIs as a result of Pub.L.s.

3-5 Definitive corporate and management commitment evidenced in individual plan and master plan by specifically referencing the Pub.L.s.

POINT RANGE	POINTS ASSIGNED
0-5	

2. Efforts to broaden SB and SDB active vendor base. (FAR 19.704(a), 52.219-9(d), DFARS Subpart 219.5, 219.704(a)(1), 219.705 and 252.219-7003)

0 Description of efforts merely parrots requirements of FAR to maintain listing of vendors.

1-2 Contains evidence that effort is directed at increasing subcontracts to SBs and SDBs for non-complex and general housekeeping supplies or services normally awarded to firms already in existing vendor base.

3-10 Addresses efforts to increase the number of SB and SDB sources awarded subcontracts, establishes plans to use competition restricted to SDBs and gives details about how plans to use competition restricted to SDBs will be accomplished. (DFARS 219.705-4 and Subpart 219.5)

NOTE: After scoring the plan to this point, if zero points have been assigned for Element 2, proceed to Item 3, Outreach. If one or more points have been assigned for this Element 2, proceed to evaluation of the subelements labeled "minus 2" and "minus 3" to determine if points assigned so far must be reduced. Do not reduce points already assigned to less than zero. (No negative points are to be entered under "Points Assigned" for any Element.) These negative scores are additive; if both of the subelements apply, then minus five points are assessed to reduce points already assigned under this element 2.

Minus 2 Includes efforts described above which rate 1-2 or 3-10 points but, when it would be appropriate, does not address effort to involve HBCUs and MIs in performing the contract for which the subcontracting plan is submitted. (DFARS 219.704(a)(1) and 219.705-4(d))

Minus 3 Includes efforts described above which rate 1-2 or 3-10 points but does not address effort to identify and overcome obstacles which may prohibit award to HBCU and MI sources currently in vendor base.

POINT RANGE	POINTS ASSIGNED
0-10	

3. Outreach (ongoing and planned actions) (FAR 19.704(a), 19.705-4, 52.219-9(d) and 52.219-9(e), DFARS 219.705).

0 No mention of outreach.

1-4 Describes efforts to work with organizations in FAR 52.219-9(d)(11)(iv) to identify potential sources for items not traditionally awarded to SB or SDB firms. (FAR 52.219-9(d)(11)(iv) and 52.219-9(e))

5-10 Indicates intent to conduct reviews to determine the competence, ability, experience and capacity available in SB or SDB firms and to provide technical assistance to SBs and SDBs or explains why such reviews or technical assistance are not appropriate. (FAR 19.705-4(c) and 52.219-9(e))

NOTE: After scoring the plan to this point, if zero points have been assigned for Element 3, proceed to Item 4, Description of supplies and services. If one or more points have been assigned for this Element 3, proceed to evaluation of the subelement labeled "minus 3" to determine if points assigned so far must be reduced. Do not reduce points already assigned to less than zero. (No negative points are to be entered under "Points Assigned" for any Element.)

Minus 3 Fails to indicate the extent to which HBCU and MI participation will be considered and facilitated in performing the contract for which the subcontracting plan is submitted, or fails to indicate other efforts to increase HBCU and MI participation in future DoD acquisitions. (DFARS 219.705-4(d))

POINT RANGE	POINTS ASSIGNED
0-10	

4. Describes supplies and services to be subcontracted and planned for subcontracting to SBs, SDBs, HBCUs and MIs. (FAR 19.705-4(d), 52.219-9(d)(3), 52.219-9(e) and DFARS 219.705).

0 No mention.

1-4 Generic list of routine supplies and services included in materials listing for the specific contract.

5-7 Indicates intent to review major product/system components and key project elements of R&D, construction, service and spare parts contracts for subcontracting to SBs, SDBs, HBCUs and MIs. (FAR 19.705-4(d)(3) and (4),

52.219-9(e)(1) and (2) and DFARS 219.705)

8-10 Substantive plan actually targets specific SBs, SDBs, HCBUs and MIs for review to determine their competence, ability, experience and capacity and identifies specific components or major portions of the acquisition for consideration of SB, SDB, HBCU or MI competition. Also, indicates intent to work with large business subcontractors for major subsystems or key project elements to ensure "flowdown" of this philosophy. (FAR 19.705-4(d) and DFARS 219.705)

POINT RANGE	POINTS ASSIGNED
0-10	

5. Describes specific efforts, based on results of efforts described in Elements No. 3 and No. 4 to ensure that SB, SDB, HBCU and MI concerns have equitable opportunity to participate in acquisitions. (FAR 19.704(a), 19.705-4, 52.219-9(d) and DFARS 219.705).

0 No mention.

1-4 Description of efforts merely parrots FAR 19.704(a)(3) and (6) and 52.219-9(d)(8).

5-8 Describes how the company intends to evaluate its own SB and SDB award performance and program effectiveness against the established goals, both company-wide and for the individual plan being negotiated. (FAR 19.704(a)(1) and (6) and 52.219-9(d)(11)(v))

9-12 Includes SBs, SDBs, HBCUs and MIs by name as members of original team for producing specific major components or subassemblies, providing a major service or performing a significant portion of the effort. (DFARS 219.705-2(d))

13-15 Describes special efforts to establish long-range relationships with SBs, SDBs, HBCUs and MIs, including leader-follower techniques, when appropriate. (FAR 19.705-4(d)(4) and DFARS 219.705-2(d))

POINT RANGE	POINTS ASSIGNED
0-15	

6. Development of percentage goal is based on planned subcontracting which is challenging, yet realistic. (FAR 19.705-4(d), DFARS 219.704(a)(1) and 219.705-4).

0 Fails to include a specific goal for subcontracting with SBs, SDBs, HBCUs and

MIs or proposes zero percent goal without substantive justification.

1-5 Sets small business goal of less than 10 percent and/or SDB/HBCU/MI goal of two percent or less with no significant justification.

6-10 Sets goals of less than 10 percent (SB) and 2 percent (SDB), but contractor shows evidence of reasonable effort, including use of set-asides, to involve SBs, SDBs, HBCUs or MIs in non-traditional areas.

11-20 Sets goals of over 10 percent (SB) and 2 percent (SDB) and also identifies specific SB, SDB, HBCU or MI concerns planned to be subcontractors, including the item or service or effort to be subcontracted. Indicates extent to which firms have participated in proposal preparation or otherwise indicates extent to which subcontracting to these firms may reasonably be assured. Goals are realistic in view of actions stated in other portions of the plan and make-or-buy plan, if applicable.

21-30 Same as for 11-20 points, but proposed percent of goal is reasonable in comparison with prior experience, yet indicates reasonable effort to improve on past experience in terms of dollars, number of SDBs, HBCUs, and MIs involved, and movement into area without previous SDB, HBCU or MI involvement.

31-40 Same as 21-30 points, but includes evidence that if SBs, universities or institutions other than HBCUs or MIs are performing on a major component or subassembly, providing a major service or performing on a key project element, SDBs, HBCUs and MIs will also be given an opportunity to perform. Also, the percentage of the SDB, HBCU, MI goal compares favorably with the percentage of SB goal, consistent with the Government-wide goals of 20 percent to SB with five percent to SDB, or is otherwise explained, and the plan includes a forecast for improvement. (The SB and SDB goals in the subcontracting plan should approximate the ratio between the SB and SDB Government-wide goals.)

POINT RANGE	**POINTS ASSIGNED**
0-40	

7. Past performance.

Extent to which the company has historically been successful in establishing realistic, yet challenging, goals and achieving them. Consider DCMC comments on prime contractor's justifications for prior failure to achieve goals. To avoid penalizing the contractor when there has been no previous defense contract, assign 10 points. (FAR 19.705-4(d)(1) and (d)(2)(iii), 19.706 and DFARS 219.706).

POINT RANGE **POINTS ASSIGNED**
0-10

8. Other regulatory and statutory requirements. If any of the following are answered "NO," the plan is not acceptable and must be revised to comply prior to award:

Does the plan have--

A. A separate goal for SB and SDB? (FAR 19.704(a)(1) and FAR 52.219-9(d)(1) and (2))
YES ( ) NO ( )

B. A separate goal for the basic contract and, if applicable, each option? (FAR 19.704(c))
YES ( ) NO ( )

C. The name of the company employee responsible for administration of plan and employee's duties? (FAR 19.704(a)(2) and 52.219-9(d)(7))
YES ( ) NO ( )

D. A statement affirming intent to comply with subcontracting "flowdown" provisions? (FAR 19.704(a)(4) and 52.219-9(d)(10))
YES ( ) NO ( )

E. A statement affirming willingness to cooperate in studies and to provide reports? (FAR 19.704(a)(5) and 52.219-9(d)(10))
YES ( ) NO ( )

F. A statement that indirect costs are either included or excluded from the proposed goals and, if included, how they will be prorated? (FAR 52.219-9(d)(6))
YES ( ) NO ( )

G. A description of efforts to ensure that SBs and SDBs have an equitable opportunity to participate in the acquisition? (FAR 52.219-9(d)(8))
YES ( ) NO ( )

H. A recitation of the types of records maintained to demonstrate procedures adopted to comply with the requirements and goal in the plan? (FAR 52.219-9(d)(11))
YES ( ) NO ( )

SECTION 00600
REPRESENTATIONS, CERTIFICATIONS & OTHER STATEMENTS OF OFFERORS

INDEX

1. (FAR 52.203-2) CERTIFICATE OF INDEPENDENT PRICE DETERMINATION (APR 1985).
2. (FAR 52.203-11) CERTIFICATION AND DISCLOSURE REGARDING PAYMENTS TO INFLUENCE CERTAIN FEDERAL TRANSACTIONS (APR 1991).
3. (FAR 52.204-3) TAXPAYER IDENTIFICATION (OCT 1998).
4. (FAR 52.204-5) WOMEN-OWNED BUSINESS (OTHER THAN SMALL BUSINESS)[MAY 1999]
5. (DFARS 252.204-7001) COMMERCIAL AND GOVERNMENT ENTITY (CAGE) CODE REPORTING (AUG 1999).
6. (FAR 52.209-5) CERTIFICATION REGARDING DEBARMENT, SUSPENSION, PROPOSED DEBARMENT, AND OTHER RESPONSIBILITY MATTERS (DEC 2001).
7. (DFARS 252.209-7001) DISCLOSURE OF OWNERSHIP OR CONTROL BY A FOREIGN GOVERNMENT THAT SUPPORTS TERRORISM (MAR 1998). [For Contracts exceeding $100,000]
8. RESERVED
9. (FAR 52.219-1) SMALL BUSINESS PROGRAM REPRESENTATIONS (APR 2002) ALTERNATE I (APR 2002)
10. RESERVED
11. (FARS 52.219-19) SMALL BUSINESS CONCERN REPRESENTATION FOR THE SMALL BUSINESS COMPETITIVENESS DEMONSTRATION PROGRAM (OCT 2000).
12. (FARS 52.219-21) SMALL BUSINESS SIZE REPRESENTATION FOR TARGETED INDUSTRY CATEGORIES UNDER THE SMALL BUSINESS COMPETITIVENESS DEMONSTRATION PROGRAM (MAY 1999).
13. (FAR 52.222-21) CERTIFICATION OF NONSEGREGATED FACILITIES (FEB 1999).
14. (FAR 52.222-22) PREVIOUS CONTRACTS AND COMPLIANCE REPORTS (FEB 1999).
15. (FAR 52.223-4) RECOVERED MATERIAL CERTIFICATION (OCT 1997).
16. (FAR 52.223-13) CERTIFICATION OF TOXIC CHEMICAL RELEASE REPORTING (JUNE 2003) [For Contracts over $100,000]
17. (DFARS 252.225-7031) SECONDARY ARAB BOYCOTT OF ISRAEL (APR 2003)
18. (DFAR 252.247-7022) REPRESENTATION OF EXTENT OF TRANSPORTATION BY SEA (AUG 1992).
19. CONTRACTOR'S CERTIFICATION (Reference FAR 4.102) (Local Provision)

SECTION 00600
REPRESENTATIONS, CERTIFICATIONS & OTHER STATEMENTS OF OFFERORS

The bidder (offeror) makes the following certification and representations as a part of the proposal, shall check the appropriate boxes, fill in the appropriate information, and provide signatures on the attached "Solicitation Form" (00600) pages, and submit with Standard Form 1442 (Section 00010).

1. (FAR 52.203-2) CERTIFICATE OF INDEPENDENT PRICE DETERMINATION (APR 1985).

(a) The offeror certifies that -

(1) The prices in this offer have been arrived at independ-ently, without, for the purpose of restricting competition, any consultation, communication, or agreement with any other offeror or competitor relating to (i) those prices, (ii) the intention to submit an offer, or (iii) the methods or factors used to calculate the prices offered;

(2) the prices in this offer have not been and will not be knowingly disclosed by the offeror, directly or indirectly, to any other offeror or competitor before bid opening (in the case of a Sealed Bid solicitation) or contract award (in the case of a negotiated solicitation) unless otherwise required by law; and

(3) no attempt has been made or will be made by the offeror to induce any other concern to submit or not to submit an offer for the purpose of restricting competition.

(b) Each signature on the offer is considered to be a certification by the signatory that the signatory -

(1) is the person in the offeror's organization responsible for determining the prices being offered in this bid or proposal, and that the signatory has not participated and will not participate in any action contrary to subparagraphs (a)(1) through (a)(3) above; or

(2)(i) has been authorized, in writing, to act as agent for the following principals in certifying that those principals have not participated, and will not participate in any action contrary to subparagraphs (a)(1) through (a)(3) above _____
_____
_____ [insert full name of person(s) in the offeror's organization responsible for determining the prices offered in this bid or proposal, and the title of his or her position in the offeror's organization];

(ii) as an authorized agent, does certify that the principals named in subdivision (b)(2)(i) above have not participated, and will not participate, in any action contrary to subparagraphs (a)(1) through (a)(3) above; and

(iii) as an agent, has not personally participated, and will not participate, in any action contrary to subparagraphs (a)(1) through (a)(3) above.

(c) If the offeror deletes or modifies subparagraph (a)(2) above, the offeror must furnish with its offer a signed statement setting forth in detail the circumstances of the disclosure.

2. (FAR 52.203-11) CERTIFICATION AND DISCLOSURE REGARDING PAYMENTS TO INFLUENCE CERTAIN FEDERAL TRANSACTIONS (APR 1991).

(a) The definitions and prohibitions contained in the clause, at FAR 52.203-12, Limitation on Payments to Influence Certain Federal Transactions, included in this solicitation, are hereby incorporated by reference in paragraph (b) of this certification.

(b) The offeror, by signing its offer, hereby certifies to the best of his or her knowledge and belief that on or after December 23, 1989, -

(1) No Federal appropriated funds have been paid or will be paid to any person for influencing or attempting to influence an officer or employee of any agency, a Member of Congress, an officer or employee of Congress, or an employee of a Member of Congress on his or her behalf in connection with the awarding of any Federal contract, the making of any Federal grant, the making of any Federal loan, the entering into of any cooperative agreement, and the extension, continuation, renewal, amendment or modification of any Federal contract, grant, loan, or cooperative agreement;

(2) If any funds other than Federal appropriated funds (including profit or fee received under a covered Federal transaction) have been paid, or will be paid, to any person for influencing or attempting to influence an officer or employee of any agency, a Member of Congress, an officer or employee of Congress, or an employee of a Member of Congress on his or her behalf in connection with this solicitation, the offeror shall complete and submit, with its offer, OMB standard form LLL, Disclosure of Lobbying Activities, to the Contracting Officer; and

(3) He or she will include the language of this certification in all subcontract awards at any tier and require that all recipients of subcontract awards in excess of $100,000 shall certify and disclose accordingly.

(c) Submission of this certification and disclosure is a prerequisite for making or entering into this contract imposed by section 1352, title 31, United States Code. Any person who makes an expenditure prohibited under this provision or who fails to file or amend the disclosure form to be filed or amended by this provision, shall be subject to a civil penalty of not less than $10,000, and not more than $100,000, for each such failure.

3. (FAR 52.204-3) TAXPAYER IDENTIFICATION (OCT 1998).

(a) Definitions.

"Common parent," as used in this provision, means that corporate entity that owns or controls an affiliated group of corporations that files its Federal income tax returns on a consolidated basis, and of which the offeror is a member.

"Taxpayer Identification Number (TIN)," as used in this provision, means the number required by the Internal Revenue Service (IRS) to be used by the offeror in reporting income tax and other returns. The TIN may be either a Social Security Number or an Employer Identification Number.

(b) All offerors must submit the information required in paragraphs (d) through (f) of this provision to comply with debt collection requirements of 31 U.S.C. 7701(c) and 3325(d), reporting requirements of 26 U.S.C. 6041, 6041A, and 6050M, and implementing regulations issued by the IRS. If the resulting contract is subject to the payment reporting requirements described in Federal Acquisition Regulation (FAR) 4.904, the failure or refusal by the offeror to furnish the information may result in a 31 percent reduction of payments otherwise due under the contract.

(c) The TIN may be used by the Government to collect and report on any delinquent amounts arising out of the offeror's relationship with the Government (31 U.S.C. 7701(c)(3)). If the resulting contract is subject to the payment reporting requirements described in FAR 4.904, the TIN provided hereunder may be matched with IRS records to verify the accuracy of the offeror's TIN.

(d) Taxpayer Identification Number (TIN).

[ ] TIN: _____.

[ ] TIN has been applied for.

[ ] TIN is not required because:
[ ] Offeror is a nonresident alien, foreign corporation, or foreign partnership that does not have income effectively connected with the conduct of a trade or business in the United States and does not have an office or place of business or a fiscal paying agent in the United States;

[ ] Offeror is an agency or instrumentality of a foreign government;

[ ] Offeror is an agency or instrumentality of the Federal Government.

(e) Type of organization.

[ ] Sole proprietorship;

[ ] Partnership;

[ ] Corporate entity (not tax-exempt);

[ ] Corporate entity (tax-exempt);

[ ] Government entity (Federal, State, or local);

[ ] Foreign government;

[ ] International organization per 26 CFR 1.6049-4;

[ ] Other _____.

(f) Common parent.

[ ] Offeror is not owned or controlled by a common parent as defined in paragraph (a) of this provision.

[ ] Name and TIN of common parent:

Name _____

TIN _____

(End of provision)

4. (FAR 52.204-5) WOMEN-OWNED BUSINESS (OTHER THAN SMALL BUSINESS)[MAY 1999]

(a) *Definition*. Women-owned business concern, as used in this provision, means a concern that is at least 51 percent owned by one or more women; or in the case of any publicly owned business, at least 51 percent of its stock is owned by one or more women; and whose management and daily business operations are controlled by one or more women.

(b) *Representation. [Complete only if the offeror is a women-owned business concern and has not represented itself as a small business concern in paragraph (b)(1) of FAR 52.219–1, Small Business Program Representations, of this solicitation.]* The offeror represents that it [ ] is a women-owned business concern.
(End of provision)

5. (DFARS 252.204-7001) COMMERCIAL AND GOVERNMENT ENTITY (CAGE) CODE REPORTING (AUG 1999).

(a) The offeror is requested to enter its CAGE code on its offer in the block with its name and address. The CAGE code entered must be for that name and address. Enter "CAGE" before the number.

(b) If the Offeror does not have a CAGE code, it may ask the Contracting Officer to request one from the Defense Logistics Information Service (DLIS). The Contracting Officer will-

(1) Ask the Contractor to complete section B of a DD Form 2051, Request for Assignment of a Commercial and Government Entity (CAGE) Code;

(2) Complete section A and forward the form to DLIS; and

(3) Notify the Contractor of its assigned CAGE code.

(c) Do not delay submission of the offer pending receipt of a CAGE code.

6. (FAR 52.209-5) CERTIFICATION REGARDING DEBARMENT, SUSPENSION, PROPOSED DEBARMENT, AND OTHER RESPONSIBILITY MATTERS (DEC 2001).

(a)(1) The Offeror certifies, to the best of its knowledge and belief, that—

(i) The Offeror and/or any of its Principals—

(A) Are [ ] are not [ ] presently debarred, suspended, proposed for debarment, or declared ineligible for the award of contracts by any Federal agency;

(B) Have [ ] have not [ ], within a three-year period preceding this offer, been convicted of or had a civil judgment rendered against them for: commission of fraud or a criminal offense in connection with obtaining, attempting to obtain, or performing a public (Federal, state, or local) contract or subcontract; violation of Federal or state antitrust statutes relating to the submission of offers; or commission of embezzlement, theft, forgery, bribery, falsification or destruction of records, making false statements, tax evasion, or receiving stolen property; and

(C) Are [ ] are not [ ] presently indicted for, or otherwise criminally or civilly charged by a governmental entity with, commission of any of the offenses enumerated in paragraph (a)(1)(i)(B) of this provision.

(ii) The Offeror has [ ] has not [ ], within a three-year period preceding this offer, had one or more contracts terminated for default by any Federal agency.

(2) "Principals," for the purposes of this certification, means officers; directors; owners; partners; and, persons having primary management or supervisory responsibilities within a business entity *(e.*g., general manager; plant manager; head of a subsidiary, division, or business segment, and similar positions).

This Certification Concerns a Matter Within the Jurisdiction of an Agency of the United States and the Making of a False, Fictitious, or Fraudulent Certification May Render the Maker Subject to Prosecution Under Section 1001, Title 18, United States Code.

(b) The Offeror shall provide immediate written notice to the Contracting Officer if, at any time prior to contract award, the Offeror learns that its certification was erroneous when submitted or has become erroneous by reason of changed circumstances.

(c) A certification that any of the items in paragraph (a) of this provision exists will not necessarily result in withholding of an award under this solicitation. However, the certification will be considered in connection with a determination of the Offeror's responsibility. Failure of the Offeror to furnish a certification or provide such additional information as requested by the Contracting Officer may render the Offeror nonresponsible.

(d) Nothing contained in the foregoing shall be construed to require establishment of a system of records in order to render, in good faith, the certification required by paragraph (a) of this provision. The knowledge and

information of an Offeror is not required to exceed that which is normally possessed by a prudent person in the ordinary course of business dealings.

(e) The certification in paragraph (a) of this provision is a material representation of fact upon which reliance was placed when making award. If it is later determined that the Offeror knowingly rendered an erroneous certification, in addition to other remedies available to the Government, the Contracting Officer may terminate the contract resulting from this solicitation for default. (End of Provision)

7. (DFARS 252.209-7001) DISCLOSURE OF OWNERSHIP OR CONTROL BY A FOREIGN GOVERNMENT THAT SUPPORTS TERRORISM (MAR 1998). [For Contracts exceeding $100,000]

(a) Definitions.

As used in this provision-

(1) "Government of a terrorist country" includes the state and the government of a terrorist country, as well as any political subdivision, agency, or instrumentality thereof.

(2) "Terrorist country" means a country determined by the Secretary of State, under section 6(j)(1)(A)) of the Export Administration Act of 1979 (50 U.S.C. App. 2405(j)(i)(A)), to be a country the government of which has repeatedly provided support for acts of international terrorism. As of the date of this provision, terrorist countries include: Cuba, Iran, Iraq, Libya, North Korea, Sudan, and Syria.

(3) "Significant interest" means-

(i) Ownership of or beneficial interest in 5 percent or more of the firm's or subsidiary's securities. Beneficial interest includes holding 5 percent or more of any class of the firm's securities in "nominee shares," "street names," or some other method of holding securities that does not disclose the beneficial owner;

(ii) Holding a management position in the firm, such as a director or officer;

(iii) Ability to control or influence the election, appointment, or tenure of directors or officers in the firm;

(iv) Ownership of 10 percent or more of the assets of a firm such as equipment, buildings, real estate, or other tangible assets of the firm; or

(v) Holding 50 percent or more of the indebtedness of a firm.

(b) Prohibition on award. In accordance with 10 U.S.C. 2327, no contract may be awarded to a firm or a subsidiary of a firm if the government of a terrorist country has a significant interest in the firm or subsidiary [or, in the case of a subsidiary, the firm that owns the subsidiary], unless a waiver is granted by the Secretary of Defense.

(c) Disclosure.

The Offeror shall disclose any significant interest the government of each of the following countries has in the Offeror or a subsidiary of the Offeror. If the Offeror is a subsidiary, it shall also disclose any significant interest the government of a terrorist country has in any firm that owns or controls the subsidiary. The disclosure shall include--

(1) Identification of each government holding a significant interest; and

(2) A description of the significant interest held by each Government.

(End of provision)

8. RESERVED

9. (FAR 52.219-1) SMALL BUSINESS PROGRAM REPRESENTATIONS (APR 2002) ALTERNATE I (APR 2002)

(a)(1) The North American Industry Classification System (NAICS) code for this acquisition is _____ [*insert NAICS code*].

(2) The small business size standard is _____ [*insert size standard*].

(3) The small business size standard for a concern which submits an offer in its own name, other than on a construction or service contract, but which proposes to furnish a product which it did not itself manufacture, is 500 employees.

(b) *Representations*. (1) The offeror represents as part of its offer that it [ ] is, [ ] is not a small business concern.

(2) [*Complete only if the offeror represented itself as a small business concern in paragraph (b)(1) of this provision*.] The offeror represents, for general statistical purposes, that it [ ] is, [ ] is not, a small disadvantaged business concern as defined in 13 CFR 124.1002.

(3) [*Complete only if the offeror represented itself as a small business concern in paragraph (b)(1) of this provision*.] The offeror represents as part of its offer that it [ ] is, [ ] is not a women-owned small business concern.

(4) [*Complete only if the offeror represented itself as a small business concern in paragraph (b)(1) of this provision*.] The offeror represents as part of its offer that it [ ] is, [ ] is not a veteran-owned small business concern.

(5) [*Complete only if the offeror represented itself as aveteran-owned small business concern in paragraph (b)(4) of this provision*.] The offeror represents as part of its offer that it [ ] is, [ ] is not a service-disabled veteran-owned small business concern.

(6) *[Complete only if the offeror represented itself as a small business concern in paragraph (b)(1) of this provision*.] The offeror represents, as part of its offer, that—

(i) It [ ] is, [ ] is not a HUBZone small business concern listed, on the date of this representation, on the List of Qualified HUBZone Small Business Concerns maintained by the Small Business Administration, and no material change in ownership and control, principal office, or HUBZone employee percentage has occurred since it was certified by the Small Business Administration in accordance with 13 CFR part 126; and

(ii) It [ ] is, [ ] is not a joint venture that complies with the requirements of 13 CFR part 126, and the representation in paragraph (b)(6)(i) of this provision is accurate for the HUBZone small business concern or concerns that are participating in the joint venture. [*The offeror shall enter the name or names of the HUBZone small business concern or concerns that are participating in the joint venture:*_____.] Each HUBZone small business concern participating in the joint venture shall submit a separate signed copy of the HUBZone representation.

(7) [*Complete if offeror represented itself as disadvantaged in paragraph (b)(2) of this provision.*] The offeror shall check the category in which its ownership falls:

_____ Black American.
_____ Hispanic American.
_____ Native American (American Indians, Eskimos, Aleuts, or Native Hawaiians).
_____ Asian-Pacific American (persons with origins from Burma, Thailand, Malaysia, Indonesia, Singapore, Brunei, Japan, China, Taiwan, Laos, Cambodia (Kampuchea),Vietnam, Korea, The Philippines, U.S. Trust Territory of the Pacific Islands (Republic of Palau), Republic of the Marshall Islands, Federated States of Micronesia, the Commonwealth of the Northern Mariana Islands, Guam, Samoa, Macao, Hong Kong, Fiji, Tonga, Kiribati, Tuvalu, or Nauru).
_____ Subcontinent Asian (Asian-Indian) American (persons with origins from India, Pakistan, Bangladesh, Sri Lanka, Bhutan, the Maldives Islands, or Nepal).
_____ Individual/concern, other than one of the preceding.

(c) *Definitions*. As used in this provision—

"Service-disabled veteran-owned small business concern"—

(1) Means a small business concern—

(i) Not less than 51 percent of which is owned by one or more service-disabled veterans or, in the case of any publicly owned business, not less than 51 percent of the stock of which is owned by one or more service-disabled veterans; and

(ii) The management and daily business operations of which are controlled by one or

more service-disabled veterans or, in the case of a veteran with permanent and severe disability, the spouse or permanent caregiver of such veteran.

(2) Service-disabled veteran means a veteran, as defined in 38 U.S.C. 101(2), with a disability that is service connected, as defined in 38 U.S.C. 101(16).

"Small business concern" means a concern, including its affiliates, that is independently owned and operated, not dominant in the field of operation in which it is bidding on Government contracts, and qualified as a small business under the criteria in 13 CFR part 121 and the size standard in paragraph (a) of this provision.

"Veteran-owned small business concern" means a small business concern—

(1) Not less than 51 percent of which is owned by one or more veterans (as defined at 38 U.S.C. 101(2)) or, in the case of any publicly owned business, not less than 51 percent of the stock of which is owned by one or more veterans; and

(2) The management and daily business operations of which are controlled by one or more veterans.

"Women-owned small business concern" means a small business concern—

(1) That is at least 51 percent owned by one or more women; or, in the case of any publicly owned business, at least 51 percent of the stock of which is owned by one or more women; and

(2) Whose management and daily business operations are controlled by one or more women.

(d) *Notice*. (1) If this solicitation is for supplies and has been set aside, in whole or in part, for small business concerns, then the clause in this solicitation providing notice of the set-aside contains restrictions on the source of the end items to be furnished.

(2) Under 15 U.S.C. 645(d), any person who misrepresents a firm's status as a small, HUBZone small, small disadvantaged, or women-owned small business concern in order to obtain a contract to be awarded under the preference programs established pursuant to section 8(a), 8(d), 9, or 15 of the Small Business Act or any other provision of Federal law that specifically references section 8(d) for a definition of program eligibility, shall—

(i) Be punished by imposition of fine, imprisonment, or both;

(ii) Be subject to administrative remedies, including suspension and debarment; and

(iii) Be ineligible for participation in programs conducted under the authority of the Act.

(End of provision)

10. RESERVED

11. (FARS 52.219-19) SMALL BUSINESS CONCERN REPRESENTATION FOR THE SMALL BUSINESS COMPETITIVENESS DEMONSTRATION PROGRAM (OCT 2000).

(a) *Definition*. "Emerging small business" as used in this solicitation, means a small business concern whose size is no greater than 50 percent of the numerical size standard applicable to the North American Industry Classification System (NAICS) code assigned to a contracting opportunity.

(b) (Complete only if Offeror has represented itself under the provision at FAR 52.219-1 as a small business concern under the size standards of this solicitation.) The Offeror [ ] is, [ ] is not an emerging small business.

(c) (Complete only if the Offeror is a small business or an emerging small business, indicating its size range.)

Offeror's number of employees for the past 12 months (check this column if size standard stated in solicitation is expressed in terms of number of employees) or Offeror's average annual gross revenue for the last 3 fiscal years (check this column if size standard stated in solicitation is expressed in terms of annual receipts). (Check one of the following.)

No. of Employees	Average Annual Gross Revenues
_____50 or fewer	_____$1 million or less
_____51 - 100	_____$1,000,001 - $2 million
_____101 - 250	_____$2,000,001 - $3.5 million
_____251 - 500	_____$3,500,001 - $5 million
_____501 - 750	_____$5,000,001 - $10 million
_____751 - 1,000	_____$10,000,001 - $17 million
_____Over 1,000	_____Over $17 million

12. (FARS 52.219-21) SMALL BUSINESS SIZE REPRESENTATION FOR TARGETED INDUSTRY CATEGORIES UNDER THE SMALL BUSINESS COMPETITIVENESS DEMONSTRATION PROGRAM (MAY 1999).

[*Complete only if the Offeror has represented itself under the provision at 52.219-1 as a small business concern under the size standards of this solicitation*.]

Offeror's number of employees for the past 12 months [*check this column if size standard stated in solicitation is expressed in terms of number of employees*] or Offeror's average annual gross revenue for the last 3 fiscal years [check this column if size standard in solicitation is expressed in terms of annual receipts]. [*Check one of the following.*]

NO. OF EMPLOYEES	AVERAGE ANNUAL GROSS REVENUES
_____50 or fewer	_____$1 million or less
_____51 - 100	_____$1,000,001 - $2 million
_____101 - 250	_____$2,000,001 - $3.5 million
_____251 - 500	_____$3,500,001 - $5 million
_____501 - 750	_____$5,000,001 - $10 million
_____751 - 1,000	_____$10,000,001 - $17 million
_____Over 1,000	_____Over $17 million

13. (FAR 52.222-21) CERTIFICATION OF NONSEGREGATED FACILITIES (FEB 1999).

(a) "Segregated facilities," as used in this clause, means any waiting rooms, work areas, rest rooms and wash rooms, restaurants and other eating areas, time clocks, locker rooms and other storage or dressing areas, parking lots, drinking fountains, recreation or entertainment areas, transportation, and housing facilities provided for

employees, that are segregated by explicit directive or are in fact segregated on the basis of race, color, religion, sex, or national origin because of written or oral policies or employee custom. The term does not include separate or single-user rest rooms or necessary dressing or sleeping areas provided to assure privacy between the sexes.

(b) The Contractor agrees that it does not and will not maintain or provide for its employees any segregated facilities at any of its establishments, and that it does not and will not permit its employees to perform their services at any location under its control where segregated facilities are maintained. The Contractor agrees that a breach of this clause is a violation of the Equal Opportunity clause in this contract.

(c) The Contractor shall include this clause in every subcontract and purchase order that is subject to the Equal Opportunity clause of this contract.

(End of clause)

14. (FAR 52.222-22) PREVIOUS CONTRACTS AND COMPLIANCE REPORTS (FEB 1999).

(a) It [ ] has, [ ] has not participated in a previous contract or subcontract subject the Equal Opportunity clause of this solicitation;

(b) It [ ] has, [ ] has not filed all required compliance reports; and

(c) Representations indicating submission of required compliance reports, signed by proposed subcontractors, will be obtained before subcontract awards.

(End of provision)

15. (FAR 52.223-4) RECOVERED MATERIAL CERTIFICATION (OCT 1997).

As required by the Resource Conservation and Recovery Act of 1976 (42 U.S.C. 6962(c)(3)(A)(i)), the offeror certifies, by signing this offer, that the percentage of recovered materials to be used in the performance of the contract will be at least the amount required by the applicable contract specifications.

(End of provision)

16. (FAR 52.223-13) CERTIFICATION OF TOXIC CHEMICAL RELEASE REPORTING (JUNE 2003) [For Contracts over $100,000]

(a) Submission of this certification is a prerequisite for making or entering into this contract imposed by Executive Order 12969, August 8, 1995.

(b) By signing this offer, the offeror certifies that-

(1) As the owner or operator of a facilities that will be used in the performance of this contract that are subject to the filing and reporting requirements described in section 313 of the Emergency Planning and Community Right-to-Know Act of 1986 (EPCRA) (42 U.S.C. 11023) and section 6607 of the Pollution Prevention Act of 1990 (PPA) (42 U.S.C. 13106), the offeror will file and continue to file, for such facilities for the life of the contract the Toxic Chemical Release Inventory Form (Form R) as described in sections 313(a) and (g) of the EPCRA and section 6607 of PPA; or

(2) None of its owned or operated facilities to be used in the performance of this contract is subject the Form R filing and reporting requirements because each facility is exempt for at least one of the following reasons: (Check each block that is applicable.)

[ ] (i) The facility does not manufacture, process or otherwise use any toxic chemicals listed under section 313(c) of EPCRA, 42 U.S.C. 11023(c);

[ ] (ii) The facility does not have 10 or more full-time employees as specified in section 313(b)(1)(A) of EPCRA, 42 U.S.C. 11023(b)(1)(A);

[ ] (iii) The facility does not meet the reporting thresholds of toxic chemicals established under section 313(f) of EPCRA, 42 U.S.C. 11023(f) (including the alternate thresholds at 40 CFR 372.27, provided an appropriate certification form has been filed with EPA);

[ ] (iv) The facility does not fall within Standard Industrial Classification Code (SIC) major groups 20 through 39 or their corresponding North American Industry Classification System (NAICS) sectors 31 through 33; or

[ ] (v) The facility is not located within any State of the United States, the District of Columbia, or its outlying areas.

17. (DFARS 252.225-7031) SECONDARY ARAB BOYCOTT OF ISRAEL (APR 2003)

(a) *Definitions.* As used in this provision-

(1) "Foreign person" means any person (including any individual, partnership, corporation, or other form of association) other than a United States person.

(2) "United States person" is defined in 50 U.S.C. App. 2415(2) and means-

(i) Any United States resident or national (other than an individual resident outside the United States who is employed by other than a United States person);

(ii) Any domestic concern (including any permanent domestic establishment of any foreign concern); and

(iii) Any foreign subsidiary or affiliate (including any permanent foreign establishment) of any domestic concern that is controlled in fact by such domestic concern.

(b) *Certification*. If the offeror is a foreign person, the offeror certifies, by submission of an offer, that it-

(1) Does not comply with the Secondary Arab Boycott of Israel; and

(2) Is not taking or knowingly agreeing to take any action, with respect to the Secondary Boycott of Israel by Arab countries, which 50 U.S.C. App. 2407(a) prohibits a United States person from taking.

(End of Provision)

18. (DFAR 252.247-7022) REPRESENTATION OF EXTENT OF TRANSPORTATION BY SEA (AUG 1992).

(a) The Offeror shall indicate by checking the appropriate blank in paragraph (b) of this provision whether transportation of supplies by sea is anticipated under the resultant contract. The term "supplies" is defined in the Transportation of Supplies by Sea clause of this solicitation.

(b) REPRESENTATION. The Offeror represents that it-

_____ Does anticipate that supplies will be transported by sea in the performance of any contract or subcontract resulting from this solicitation.

_____ Does not anticipate that supplies will be transported by sea in the performance of any contract or subcontract resulting from this solicitation.

(c) Any contract resulting from this solicitation will include the Transportation of Supplies by Sea Clause. If the Offeror represents that it will not use ocean transportation, the resulting contract will also include the Defense FAR Supplement clause at 252.247-7024, Notification of Transportation of Supplies by Sea.

19. CONTRACTOR'S CERTIFICATION (Reference FAR 4.102) (Local Provision)

Offerors are cautioned to note the "Contractor's Certification" included in this solicitation and to furnish the information required by paragraph (b), Partnerships, and paragraph (c), Corporations, as appropriate.

(a) CONTRACT WITH INDIVIDUAL. If the resultant contract is with an individual, it shall be signed by the individual in his own name. A contract with an individual doing business as a firm shall be signed by that individual and will ordinarily take the following form.

_____ (Signed)

An individual doing business as

_____

(b) CONTRACTS WITH PARTNERSHIPS. If the resultant contract is with a partnership, it need be signed by only one partner PROVIDED the partner signing has the authority to legally bind the partnership. In addition, the following statement shall be completed:

_____ is a partnership composed of
(Firm Name)

_____
(List All Partners)

_____
(Indicate if any partner is limited in partnership authority

(c) CONTRACTS WITH CORPORATIONS. If the resultant contract is with a corporation, it shall be executed in the corporation name, followed by the word "by" after which the person who has been authorized to execute the contract on behalf of the corporation shall sign his/her name, with the designation of his/her official capacity. In addition, the following certification shall be completed:

I, _____, certify that I am the _____ of the corporation named as Contractor herein, that _____ who signed this contract on behalf of the Contractor was then _____ of said corporation, that said contract was duly for and on behalf of said corporation by authority of the governing body and is within the scope of its corporate powers.

In witness whereof, I have hereunto affixed my signature this ____ day of _____, 19___.

_____
(Signature, Printed Name, Title)

(d) CONTRACT WITH JOINT VENTURES. If the resultant contract is with a joint venture, each participant shall sign and in the manner indicated above for each type of participant. In addition, to assure a single point of contact for resolution of contractual matters and payments, the following certification shall be signed by each participant in the joint venture.

The parties hereto expressly understand and agree as follows:

(1) _____
(Name) (Title) (Company)

is the principal representative of the joint venture. As such, all communications regarding the administration of the contract and the performance of the work thereunder may be directed to him. In the absence of:

_____
(Name) (Title) (Company as above)

_____
(Name) (Title) (Company of Alternate)

is the alternate principle of the joint venture.

(2) Directions, approvals, required notices, and all other communications from the Government to the joint venture, including transmittal of payments by the Government, shall be directed to:

_____

(Name) (Title) (Company)

principal representative of the joint venture.

(e) SIGNATURE OF AGENTS. If the resultant contract is signed by an agent, other than as stated above, the fact of the agency will be evidenced by a copy of the Power of Attorney.

This page was intentionally left blank for duplex printing.

SECTION 00700

CONTRACT CLAUSES

TABLE OF CONTENTS

* - CLAUSE WHICH MAY BE INCORPORATED BY REFERENCE

1. FAR 52.252-2 CLAUSES INCORPORATED BY REFERENCE (FEB 1998)
2. DFARS 252.201-7000 CONTRACTING OFFICER'S REPRESENTATIVE (DEC 1991)
3. *FAR 52.202-1 DEFINITIONS (DEC 2001) ALTERNATE I (MAY 2001)
4. *FAR 52.203-3 GRATUITIES (APR 1984)
5. *FAR 52.203-5 COVENANT AGAINST CONTINGENT FEES (APR 1984)
6. *FAR 52.203-7 ANTI-KICKBACK PROCEDURES (JUL 1995)
7. *FAR 52.203-8 CANCELLATION, RESCISSION, AND RECOVERY OF FUNDS FOR ILLEGAL OR IMPROPER ACTIVITY (JAN 1997)
8. DFARS 252.203-7001 PROHIBITION ON PERSONS CONVICTED OF FRAUD OR OTHER DEFENSE—CONTRACT-RELATED FELONIES (MARCH 1999)
9. RESERVED
10. *FAR 52.203-10 PRICE OR FEE ADJUSTMENT FOR ILLEGAL OR IMPROPER ACTIVITY (JAN 1997)
11. *FAR 52.203-12 LIMITATION ON PAYMENTS TO INFLUENCE CERTAIN FEDERAL TRANSACTIONS (JUNE 2003)
12. DFARS 252.203-7002 DISPLAY OF DOD HOTLINE POSTER (DEC 1991) (For Military Contracts Exceeding $5,000,000)
13. *FAR 52.204-4 PRINTED OR COPIED DOUBLE-SIDED ON RECYCLED PAPER (AUG 2000)
14. DFARS 252.204-7003 CONTROL OF GOVERNMENT PERSONNEL WORK PRODUCT (APR 1992)
15. *FAR 52.209-6 PROTECTING THE GOVERNMENTS INTEREST WHEN SUBCONTRACTING WITH CONTRACTORS DEBARRED, SUSPENDED, OR PROPOSED FOR DEBARMENT (JUL 1995)
16. DFARS 252.209-7004 SUBCONTRACTING WITH FIRMS THAT ARE OWNED OR CONTROLLED BY THE GOVERNMENT OF A TERRORIST COUNTY (MAR 1998)
17. *FAR 52.211-15 DEFENSE PRIORITY AND ALLOCATION REQUIREMENTS (SEP 1990) [For Military Contract's Only]
18. DELETED~~FAR 52.211-18 VARIATION IN ESTIMATED QUANTITY (APR 1984)~~
19. *FAR 52.215-2 AUDIT AND RECORDS-NEGOTIATION (JUNE 1999)
20. *FAR 52.215-10 PRICE REDUCTION FOR DEFECTIVE COST OR PRICING DATA (OCT 1997)
21. *FAR 52.215-12 SUBCONTRACTOR COST OR PRICING DATA (OCT 1997)
22. *FAR 52.215-15 PENSION ADJUSTMENTS AND ASSET REVERSIONS (DEC 1998)
23. *FAR 52.215-16 FACILITIES CAPITAL COST OF MONEY (JUNE 2003)
24. *FAR 52.215-17 WAIVER OF FACILITIES CAPITAL COST OF MONEY (OCT 1997)
25. *FAR 52.215-18 REVERSION OR ADJUSTMENT OF PLANS FOR POST RETIREMENT BENEFITS (PRB) OTHER THAN PENSIONS (OCT 1997)
26. *FAR 52.219-4 NOTICE OF PRICE EVALUATION PREFERENCE FOR HUBZONE SMALL BUSINESS CONCERNS (JAN 1999)
27. *FAR 52.219-8 UTILIZATION OF SMALL BUSINESS CONCERNS (OCT 2000)
28. *FAR 52.219-9 SMALL BUSINESS SUBCONTRACTING PLAN (JAN 2002) [When Contracting By Negotiations]
29. *FAR 52.219-16 LIQUIDATED DAMAGES-SUBCONTRACTING PLAN (JAN 1999)
30. DFARS 252.219-7003 SMALL, SMALL DISADVANTAGED AND WOMEN-OWNED SMALL BUSINESS SUBCONTRACTING PLAN (DOD CONTRACTS) (APR 1996)
31. DFARS 252.219-7004 SMALL, SMALL DISADVANTAGED AND WOMEN-OWNED SMALL

BUSINESS SUBCONTRACTING PLAN (TEST PROGRAM) (JUN 1997)
32. DFARS 252.219-7009 SECTION 8(a) DIRECT AWARD (MAR 2002)
33. DFARS 252.219-7010 ALTENATE A (JUN 1998) [When Competitive 8(a) Contracting Procedures are used]
34. *FAR 52.222-1 NOTICE TO THE GOVERNMENT OF LABOR DISPUTES (FEB 1997)
35. *FAR 52.222-3 CONVICT LABOR (JUNE 2003)
36. *FAR 52.222-4 CONTRACT WORK HOURS AND SAFETY STANDARDS ACT— OVERTIME COMPENSATION (SEPT 2000)
37. *FAR 52.222-6 DAVIS-BACON ACT (FEB 1995)
38. *FAR 52.222-7 WITHHOLDING OF FUNDS (FEB 1988)
39. *FAR 52.222-8 PAYROLLS AND BASIC RECORDS (FEB 1988)
40. *FAR 52.222-9 APPRENTICES AND TRAINEES (FEB 1988)
41. *FAR 52.222-10 COMPLIANCE WITH COPELAND ACT REQUIREMENTS (FEB 1988)
42. *FAR 52.222-11 SUBCONTRACTS (LABOR STANDARDS) (FEB 1988)
43. *FAR 52.222-12 CONTRACT TERMINATION--DEBARMENT (FEB 1988)
44. *FAR 52.222-13 COMPLIANCE WITH DAVIS-BACON AND RELATED ACT REGULATIONS (FEB 1988)
45. *FAR 52.222-14 DISPUTES CONCERNING LABOR STANDARDS (FEB 1988)
46. *FAR 52.222-15 CERTIFICATION OF ELIGIBILITY (FEB 1988)
47. *FAR 52.222-26 EQUAL OPPORTUNITY (APR 2002)
48. *FAR 52.222-27 AFFIRMATIVE ACTION COMPLIANCE REQUIREMENTS FOR CONSTRUCTION (FEB 1999)
49. *FAR 52.222-35 EQUAL OPPORTUNITY FOR SPECIAL DISABLED VETERANS, VETERANS OF THE VIETNAM ERA, AND OTHER ELIGIBLE VETERANS (DEC 2001)
50. *FAR 52.222-36 AFFIRMATIVE ACTION FOR WORKERS WITH DISABILITIES (JUN 1998)
51. *FAR 52.222-37 EMPLOYMENT REPORTS ON SPECIAL DISABLED VETERANS, VETERANS OF THE VIETNAM ERA, AND OTHER ELIGIBLE VETERANS (DEC 2001)
52. *FAR 52.222-38 COMPLIANCE WITH VETERANS' EMPLOYMENT REPORTING REQUIREMENTS (DEC 2001)
53. *FAR 52.223-3 HAZARDOUS MATERIAL IDENTIFICATION AND MATERIAL SAFETY DATA (JAN 1997)
54. *FAR 52.223-5 POLLUTION PREVENTION AND RIGHT-TO-KNOW INFORMATION (APR 1998) [For Work on Federal Facilities]
55. *FAR 52.223-6 DRUG-FREE WORKPLACE (MAY 2001)
56. FAR 52.223-9 ESTIMATE OF PERCENTAGE OF RECOVERED MATERIAL CONTENT FOR EPA-DESIGNATED PRODUCTS (AUG 2000) [For Contracts exceeding $100,000. EPA Designated product (available at http://www.epa.gov/cpg/)]
57. *FAR 52.223-14 TOXIC CHEMICAL RELEASE REPORTING (JUNE 2003) [For Contracts Over $100,000]
58. DFARS 252.223-7006 PROHIBITION ON STORAGE AND DISPOSAL OF TOXIC AND HAZARDOUS MATERIALS (APR 1993)
59. *FAR 52.225-9 BUY AMERICAN ACT—CONSTRUCTION MATERIALS (JUNE 2003) (For Contracts less than $6.481 million)
60. *FAR 52.225-10 NOTICE OF BUY AMERICAN ACT REQUIREMENT—CONSTRUCTION MATERIALS (MAY 2002) (Applicable with FAR 52.225-9)
61. *FAR 52.225-11 BUY AMERICAN ACT—CONSTRUCTION MATERIALS UNDER TRADE AGREEMENTS (JUNE 2003) [For Contracts more than $6,481,000] ALTERNATE I (MAY 2002) [For Contracts between $6.481 and 7.304733 Million]
62. *FAR 52.225-12 NOTICE OF BUY AMERICAN ACT REQUIREMENT—CONSTRUCTION MATERIALS UNDER TRADE AGREEMENTS (MAY 2002) [Applicable with FAR 52.225-11] ALTERNATE II (MAY 2002) [For Contracts Between 6.481 and 7.304733 Million]
63. *FAR 52.225-13 RESTRICTIONS ON CERTAIN FOREIGN PURCHASES (JUNE 2003)
64. DFARS 252.226-7001 UTILIZATION OF INDIAN ORGANIZATIONS AND INDIAN-OWNED ECONOMIC ENTERPRISES--DOD CONTRACTS (SEP 2001)
65. *FAR 52.227-1 AUTHORIZATION AND CONSENT (JUL 1995)

66. *FAR 52.227-2 NOTICE AND ASSISTANCE REGARDING PATENT AND COPYRIGHT INFRINGEMENT (AUG 1996)
67. *FAR 52.227-4 PATENT INDEMNITY--CONSTRUCTION CONTRACTS (APR 1984)
68. DFARS 252.227-7022 GOVERNMENT RIGHTS (UNLIMITED) (MAR 1979)
69. DFARS 252.227-7023 DRAWINGS AND OTHER DATA TO BECOME PROPERTY OF GOVERNMENT (MAR 1979)
70. DFARS 252.227-7033 RIGHTS IN SHOP DRAWINGS (APR 1966)
71. *FAR 52.228-2 ADDITIONAL BOND SECURITY (OCT 1997)
72. *FAR 52.228-5 INSURANCE--WORK ON A GOVERNMENT INSTALLATION (JAN 1997) [For Contracts Exceeding $100,000]
73. *FAR 52.228-11 PLEDGES OF ASSETS (FEB 1992)
74. *FAR 52.228-12 PROSPECTIVE SUBCONTRACTOR REQUESTS FOR BONDS (OCT 1995)
75. FAR 52.228-14 IRREVOCABLE LETTER OF CREDIT (DEC 1999)
76. *FAR 52.228-15 PERFORMANCE AND PAYMENT BONDS (JULY 2000)
77. FAR 52.229-3 FEDERAL, STATE, AND LOCAL TAXES (APR 2003) [For Contracts Exceeding $100,000]
78. RESERVED
79. FAR 52.230-1 COST ACCOUNTING STANDARDS NOTICES AND CERTIFICATION (JUNE 2000)
80. *FAR 52.230-2 COST ACCOUNTING STANDARDS (APR 1998)
81. *FAR 52.230-3 DISCLOSURE AND CONSISTENCY OF COST ACCOUNTING PRACTICES (APR 1998)
82. DFARS 252.231-7000 SUPPLEMENTAL COST PRINCIPLES (DEC 1991)
83. *FAR 52.232-5 PAYMENTS UNDER FIXED-PRICE CONSTRUCTION CONTRACTS (SEPT 2002)
84. RESERVED.
85. *FAR 52.232-10 PAYMENTS UNDER FIXED-PRICE ARCHITECT-ENGINEER CONTRACTS (AUG 1987)
86. *FAR 52.232-17 INTEREST (JUN 1996)
87. *FAR 52.232-23 ASSIGNMENT OF CLAIMS (JAN 1986)
88. *FAR 52.232-26 PROMPT PAYMENT FOR FIXED-PRICE ARCHITECT-ENGINEER CONTRACTS (FEB 2002)
89. *FAR 52.232-27 PROMPT PAY FOR CONSTRUCTION CONTRACTS (FEB 2002)
90. *FAR 52.232-33 PAYMENT BY ELECTRONIC FUNDS TRANSFER –CENTRAL CONTRACTOR REGISTRATION (MAY 1999)
91. DFARS 252.232-7004 DOD PROGRESS PAYMENT RATES (OCT 2001)
92. DFARS 252.232-7005 REIMBURSEMENT OF SUBCONTRACTOR ADVANCE PAYMENTS--DOD PILOT MENTOR-PROTEGE PROGRAM (SEP 2001)
93. *FAR 52.233-1 DISPUTES (JULY 2002)
94. *FAR 52.233-1I DISPUTES (JULY 2002) ALTERNATE I (DEC 1991)
95. *FAR 52.233-3 PROTEST AFTER AWARD (AUG 1996)
96. RESERVED.
97. FAR 52.236-2 DIFFERING SITE CONDITIONS (APR 1984)
98. *FAR 52.236-3 SITE INVESTIGATION AND CONDITIONS AFFECTING THE WORK (APR 1984)
99. *FAR 52.236-5 MATERIAL AND WORKMANSHIP (APR 1984)
100. *FAR 52.236-6 SUPERINTENDENCE BY THE CONTRACTOR (APR 1984)
101. FAR 52.236-7 PERMITS AND RESPONSIBILITIES (NOV 1991)
102. *FAR 52.236-8 OTHER CONTRACTS (APR 1984)
103. *FAR 52.236-9 PROTECTION OF EXISTING VEGETATION, STRUCTURES, EQUIPMENT, UTILITIES, AND IMPROVEMENTS (APR 1984)
104. FAR 52.236-10 OPERATIONS AND STORAGE AREAS (APR 1984)
105. *FAR 52.236-11 USE AND POSSESSION PRIOR TO COMPLETION (APR 1984)
106. *FAR 52.236-12 CLEANING UP (APR 1984)
107. *FAR 52.236-13 ACCIDENT PREVENTION-ALTERNATE I (NOV 1991)
108. *FAR 52.236-14 AVAILABILITY AND USE OF UTILITY SERVICES (APR 1984)
109. FAR 52.236-15 SCHEDULES FOR CONSTRUCTION CONTRACTS (APR 1984)
110. *FAR 52.236-17 LAYOUT OF WORK (APR 1984)

111. FAR 52.236-21 SPECIFICATIONS AND DRAWINGS FOR CONSTRUCTION (FEB 1997)
112. *FAR 52.236-23 RESPONSIBILITY OF THE ARCHITECT-ENGINEER CONTRACTOR (APR 1984)
113. *FAR 52.236-24 WORK OVERSIGHT IN ARCHITECT-ENGINEER CONTRACTS (APR 1984)
114. *FAR 52.236-25 REQUIREMENTS FOR REGISTRATION OF DESIGNERS (JUNE 2003)
115. *FAR 52.236-26 PRECONSTRUCTION CONFERENCE (FEB 1995)
116. DFARS 252.236-7000 MODIFICATION OF PROPOSALS - PRICE BREAKDOWN (DEC 1991)
117. *FAR 52.242-13 BANKRUPTCY (JUL 1995)
118. *FAR 52.242-14 SUSPENSION OF WORK (APR 1984)
119. DFARS 252.242-7005 COST/SCHEDULE STATUS REPORT (MAR 1998)
120. *FAR 52.243-1 CHANGES--FIXED-PRICE (AUG 1987) ALTERNATE III (AUG 1984)
121. FAR 52.243-4 CHANGES (AUG 1987)
122. DFARS 252.243-7001 PRICING OF CONTRACT MODIFICATIONS (DEC 1991)
123. DFARS 252.243-7002 REQUESTS FOR EQUITABLE ADJUSTMENT (MAR 1998)
124. *FAR 52.244-2 SUBCONTRACTS (AUG 1998)
125. *FAR 52.244-4 SUBCONTRACTORS AND OUTSIDE ASSOCIATES AND CONSULTANTS (ARCHITECT-ENGINEER SERVICES) (AUG 1998)
126. FAR 52.244-6 SUBCONTRACTS FOR COMMERCIAL ITEMS (APR 2003)
127. *FAR 52.245-2 GOVERNMENT PROPERTY (FIXED-PRICE CONTRACTS) (JUNE 2003) [For Government Property over $100,000]
128. *FAR 52.245-4 GOVERNMENT-FURNISHED PROPERTY (SHORT FORM) (JUNE 2003) [For Government Property $100,000 or Less]
129. *FAR 52.246-12 INSPECTION OF CONSTRUCTION (AUG 1996)
130. *FAR 52.246-21 WARRANTY OF CONSTRUCTION (MAR 1994)
131. DFARS 252.247-7023 TRANSPORTATION OF SUPPLIES BY SEA (MAR 2000)
132. DFARS 252.247-7024 NOTIFICATION OF TRANSPORTATION OF SUPPLIES BY SEA (MAR 2000)
133. FAR 52.248-3 VALUE ENGINEERING--CONSTRUCTION (FEB 2000) (ALERNATE I (APR 1984)
134. *FAR 52.249-2 TERMINATION FOR CONVENIENCE OF THE GOVERNMENT (FIXED-PRICE) ALTERNATE I (SEP 1996) [For Contracts Over $100,000]
135. *FAR 52.249-10 DEFAULT (FIXED-PRICE CONSTRUCTION) (APR 1984)
136. ENVIRONMENTAL LITIGATION (1974 NOV OCE)
137. EFARS 52.249-5000 BASIS FOR SETTLEMENT OF PROPOSALS

SECTION 00700

CONTRACT CLAUSES

1. FAR 52.252-2 CLAUSES INCORPORATED BY REFERENCE (FEB 1998)

This contract incorporates one or more clauses by reference, with the same force and effect as if they were given in full text. Upon request, the Contracting Officer will make their full text available. Also, the full text of a clause may be accessed electronically at this/these address(es):

http://www.arnet.gov/far

(End of clause)

* - CONTRACT CLAUSES THAT MAY BE INCORPORATED BY REFERENCE

2. DFARS 252.201-7000 CONTRACTING OFFICER'S REPRESENTATIVE (DEC 1991)

(a) Definition.

"Contracting officer's representative" means an individual designated in accordance with subsection 201.602-2 of the Defense Federal Acquisition Regulation Supplement and authorized in writing by the contracting officer to perform specific technical or administrative functions.

(b) If the Contracting Officer designates a contracting officer's representative (COR), the Contractor will receive a copy of the written designation. It will specify the extent of the COR's authority to act on behalf of the contracting officer. The COR is not authorized to make any commitments or changes that will affect price, quality, quantity, delivery, or any other term or condition of the contract.

(End of clause)

3. *FAR 52.202-1 DEFINITIONS (DEC 2001) ALTERNATE I (MAY 2001)

a) “Agency head” or “head of the agency” means the Secretary (Attorney General, Administrator, Governor, Chairperson, or other chief official, as appropriate) of the agency, unless otherwise indicated, including any deputy or assistant chief official of the executive agency.

(b) “Commercial component” means any component that is a commercial item.

(c) “Commercial item” means—

(1) Any item, other than real property, that is of a type customarily used by the general public or by non-governmental entities for purposes other than governmental purposes, and that—

(i) Has been sold, leased, or licensed to the general public; or

(ii) Has been offered for sale, lease, or license to the general public;

(2) Any item that evolved from an item described in paragraph (c)(1) of this clause through advances in technology or performance and that is not yet available in the commercial marketplace, but will be available in the commercial marketplace in time to satisfy the delivery requirements under a Government solicitation;

(3) Any item that would satisfy a criterion expressed in paragraphs (c)(1) or (c)(2) of this clause, but for—

(i) Modifications of a type customarily available in the commercial marketplace; or

(ii) Minor modifications of a type not customarily available in the commercial

marketplace made to meet Federal Government requirements. “Minor” modifications means modifications that do not significantly alter the nongovernmental function or essential physical characteristics of an item or component, or change the purpose of a process. Factors to be considered in determining whether a modification is minor include the value and size of the modification and the comparative value and size of the final product. Dollar values and percentages may be used as guideposts, but are not conclusive evidence that a modification is minor;

(4) Any combination of items meeting the requirements of paragraphs (c)(1), (2), (3), or (5) of this clause that are of a type customarily combined and sold in combination to the general public;

(5) Installation services, maintenance services, repair services, training services, and other services if—

(i) Such services are procured for support of an item referred to in paragraph (c)(1), (2), (3), or (4) of this definition, regardless of whether such services are provided by the same source or at the same time as the item; and

(ii) The source of such services provides similar services contemporaneously to the general public under terms and conditions similar to those offered to the Federal Government

(6) Services of a type offered and sold competitively in substantial quantities in the commercial marketplace based on established catalog or market prices for specific tasks performed under standard commercial terms and conditions. This does not include services that are sold based on hourly rates without an established catalog or market price for a specific service performed. For purposes of these services—

(i) “Catalog price” means a price included in a catalog, price list, schedule, or other form that is regularly maintained by the manufacturer or vendor, is either published or otherwise available for inspection by customers, and states prices at which sales are currently, or were last, made to a significant number of buyers constituting the general public; and

(ii) “Market prices” means current prices that are established in the course of ordinary trade between buyers and sellers free to bargain and that can be substantiated through competition or from sources independent of the offerors.

(7) Any item, combination of items, or service referred to in paragraphs (c)(1) through (c)(6), notwithstanding the fact that the item, combination of items, or service is transferred between or among separate divisions, subsidiaries, or affiliates of a Contractor; or

(8) A nondevelopmental item, if the procuring agency determines the item was developed exclusively at private expense and sold in substantial quantities, on a competitive basis, to multiple State and local Governments.

(d) “Component” means any item supplied to the Government as part of an end item or of another component, except that for use in 52.225-9, and 52.225-11 see the definitions in 52.225-9(a) and 52.225-11(a).

(e) “Contracting Officer” means a person with the authority to enter into, administer, and/or terminate contracts and make related determinations and findings. The term includes certain authorized representatives of the Contracting Officer acting within the limits of their authority as delegated by the Contracting Officer.

(f) “Nondevelopmental item” means—

(1) Any previously developed item of supply used exclusively for governmental purposes by a Federal agency, a State or local government, or a foreign government with which the United States has a mutual defense cooperation agreement;

(2) Any item described in paragraph (f)(1) of this definition that requires only minor modification or modifications of a type customarily available in the commercial marketplace in order to meet the requirements of the procuring department or agency; or

(3) Any item of supply being produced that does not meet the requirements of paragraph (f)(1) or (f)(2) solely because the item is not yet in use.

(End of clause)

4. *FAR 52.203-3 GRATUITIES (APR 1984)

(a) The right of the Contractor to proceed may be terminated by written notice if, after notice and hearing, the agency head or a designee determines that the Contractor, its agent, or another representative--

(1) Offered or gave a gratuity (e.g., an entertainment or gift) to an officer, official, or employee of the Government; and

(2) Intended, by the gratuity, to obtain a contract or favorable treatment under a contract.

(b) The facts supporting this determination may be reviewed by any court having lawful jurisdiction.

(c) If this contract is terminated under paragraph (a) above, the Government is entitled--

(1) To pursue the same remedies as in a breach of the contract; and

(2) In addition to any other damages provided by law, to exemplary damages of not less than 3 nor more than 10 times the cost incurred by the Contractor in giving gratuities to the person concerned, as determined by the agency head or a designee. (This subparagraph (c)(2) is applicable only if this contract uses money appropriated to the Department of Defense.)

(d) The rights and remedies of the Government provided in this clause shall not be exclusive and are in addition to any other rights and remedies provided by law or under this contract.

5. *FAR 52.203-5 COVENANT AGAINST CONTINGENT FEES (APR 1984)

(a) The Contractor warrants that no person or agency has been employed or retained to solicit or obtain this contract upon an agreement or understanding for a contingent fee, except a bona fide employee or agency. For breach or violation of this warranty, the Government shall have the right to annul this contract without liability or, in its discretion, to deduct from the contract price or consideration, or otherwise recover, the full amount of the contingent fee.

(b) "Bona fide agency," as used in this clause, means an established commercial or selling agency, maintained by a contractor for the purpose of securing business, that neither exerts nor proposes to exert improper influence to solicit or obtain Government contracts nor holds itself out as being able to obtain any Government contract or contracts through improper influence.

"Bona fide employee," as used in this clause, means a person, employed by a contractor and subject to the contractor's supervision and control as to time, place, and manner of performance, who neither exerts nor proposes to exert improper influence to solicit or obtain Government contracts nor holds out as being able to obtain any Government contract or contracts through improper influence.

"Contingent fee," as used in this clause, means any commission, percentage, brokerage, or other fee that is contingent upon the success that a person or concern has in securing a Government contract.

"Improper influence," as used in this clause, means any influence that induces or tends to induce a Government employee or officer to give consideration or to act regarding a Government contract on any basis other than the merits of the matter.

6. *FAR 52.203-7 ANTI-KICKBACK PROCEDURES (JUL 1995)

(a) Definitions.

"Kickback," as used in this clause, means any money, fee, commission, credit, gift, gratuity, thing of value, or compensation of any kind which is provided, directly or indirectly, to any prime Contractor, prime Contractor employee, subcontractor, or subcontractor employee for the purpose of improperly obtaining or rewarding favorable treatment in connection with a prime contract or in connection with a subcontract relating to a prime contract. "Person," as used in this clause, means a corporation, partnership, business association of any kind, trust, joint-stock company, or individual.

"Prime contract," as used in this clause, means a contract or contractual action entered into by the United States for the purpose of obtaining supplies, materials, equipment, or services of any kind.

"Prime Contractor," as used in this clause, means a person who has entered into a prime contract with the United States.

"Prime Contractor employee," as used in this clause, means any officer, partner, employee, or agent of a prime Contractor.

"Subcontract," as used in this clause, means a contract or contractual action entered into by a prime Contractor or subcontractor for the purpose of obtaining supplies, materials, equipment, or services of any kind under a prime contract.

"Subcontractor," as used in this clause, (1) means any person, other than the prime Contractor, who offers to furnish or furnishes any supplies, materials, equipment, or services of any kind under a prime contract or a subcontract entered into in connection with such prime contract, and (2) includes any person who offers to furnish or furnishes general supplies to the prime Contractor or a higher tier subcontractor.

"Subcontractor employee," as used in this clause, means any officer, partner, employee, or agent of a subcontractor.

(b) The Anti-Kickback Act of 1986 (41 U.S.C. 51-58) (the Act), prohibits any person from--

(1) Providing or attempting to provide or offering to provide any kickback;

(2) Soliciting, accepting, or attempting to accept any kickback; or

(3) Including, directly or indirectly, the amount of any kickback in the contract price charged by a prime Contractor to the United States or in the contract price charged by a subcontractor to a prime Contractor or higher tier subcontractor.

(c) (1) The Contractor shall have in place and follow reasonable procedures designed to prevent and detect possible violations described in paragraph (b) of this clause in its own operations and direct business relationships.

(2) When the Contractor has reasonable grounds to believe that a violation described in paragraph (b) of this clause may have occurred, the Contractor shall promptly report in writing the possible violation. Such reports shall be made to the inspector general of the contracting agency, the head of the contracting agency if the agency does not have an inspector general, or the Department of Justice.

(3) The Contractor shall cooperate fully with any Federal agency investigating a possible violation described in paragraph (b) of this clause.

(4) The Contracting Officer may

(i) offset the amount of the kickback against any monies owed by the United States under the prime contract and/or

(ii) direct that the Prime Contractor withhold from sums owed a subcontractor under the prime contract the amount of the kickback. The Contracting Officer may order that monies withheld under subdivision (c)(4)(ii) of this clause be paid over to the Government unless the Government has already offset those monies under subdivision (c)(4)(i) of this clause. In either case, the Prime Contractor shall notify the Contracting Officer when the monies are withheld.

(5) The Contractor agrees to incorporate the substance of this clause, including subparagraph (c)(5) but excepting subparagraph (c)(1), in all subcontracts under this contract which exceed $100,000.

7. *FAR 52.203-8 CANCELLATION, RESCISSION, AND RECOVERY OF FUNDS FOR ILLEGAL OR IMPROPER ACTIVITY (JAN 1997)

(a) If the Government receives information that a contractor or a person has engaged in conduct constituting a violation of subsection (a), (b), (c), or (d) of Section 27 of the Office of Federal Procurement Policy Act (41 U.S.C. 423) (the Act), as amended by section 4304 of the National Defense Authorization Act for Fiscal Year 1996 (Pub. L. 104-106), the Government may--

(1) Cancel the solicitation, if the contract has not yet been awarded or issued; or

(2) Rescind the contract with respect to which--

(i) The Contractor or someone acting for the Contractor has been convicted for an offense where the conduct constitutes a violation of subsection 27 (a) or (b) of the Act for the purpose of either--

(A) Exchanging the information covered by such subsections for anything of value; or

(B) Obtaining or giving anyone a competitive advantage in the award of a Federal agency procurement contract; or

(ii) The head of the contracting activity has determined, based upon a preponderance of the evidence, that the Contractor or someone acting for the Contractor has engaged in conduct constituting an offense punishable under subsection 27(e)(1) of the Act.

(b) If the Government rescinds the contract under paragraph (a) of this clause, the Government is entitled to recover, in addition to any penalty prescribed by law, the amount expended under the contract.

(c) The rights and remedies of the Government specified herein are not exclusive, and are in addition to any other rights and remedies provided by law, regulation, or under this contract.

8. DFARS 252.203-7001 PROHIBITION ON PERSONS CONVICTED OF FRAUD OR OTHER DEFENSE—CONTRACT-RELATED FELONIES (MARCH 1999)

(a) Definitions.

As used in this clause--

(1) "Arising out of a contract with the "DoD" means any any act in connection with--

(i) Attempting to obtain;

(ii) Obtaining; or

(iii) Performing a contract or first-tier subcontract of any department, or component of the Department of Defense (DoD).

(2) "Conviction of fraud or any other felony," means any conviction for fraud or a felony in violation of state or Federal criminal statutes, whether entered on a verdict or plea, including a plea of nolo contendere, for which sentence has been imposed.

(3) "Date of conviction," means the date judgement was entered against the individual.

(b) Any individual who is convicted after September 29, 1988 of fraud or any other felony arising out of a contract with the DoD is prohibited from serving--

(1) In a management or supervisory capacity on any DoD contract or first-tier subcontract;

(2) On board of directors of any DoD Contractor or first-tier subcontractor;

(3) As a consultant to any DoD Contractor or first-tier subcontractor; or

(4) In any other capacity with the authority to influence, advise, or control the decisions of any DoD contractor or subcontractor with regard to any DoD contract or first-tier subcontract.

(c) Unless waived, the prohibition in paragraph (b) of this clause applies for not less than five years from the date of conviction.

(d) 10 U.S.C. 2408 provides that a defense Contractor or first-tier subcontractor shall be subject to a criminal penalty of not more than $500,000 if convicted of knowingly--

(1) Employing a person under a prohibition in paragraph (b) of this clause;

(2) Allowing such a person to serve on the board of directors of Contractor or first-tier subcontractor.

(e) In addition to the criminal penalties contained in 10 U.S.C. 2408, the Government may consider other available remedies, such as--

(1) Suspension or debarment;

(2) Cancellation of the contract at no cost to the Government; or

(3) Termination of the contract for default.

(f) The Contractor may submit written requests for waiver of the prohibition in paragraph (b) of this clause to the Contracting Officer. Requests shall clearly identify--

(1) The person involved;

(2) The nature of the conviction and resultant sentence or punishment imposed;

(3) The reasons for the requested waiver; and

(4) An explanation of why a waiver is in the interest of national security.

(g) The Contractor agrees to include the substance of this clause appropriately modified to reflect the identity and relationship of the parties, in all first-tier subcontracts exceeding the simplified acquisition threshold in Part 2 of the Federal Acquisition Regulation, except those for commercial items or components.

(h) Pursuant to 10 U.S.C.2408(c), defense contractors and subcontractors may obtain information as to whether a particular has been convicted of fraud or any other felony arising out of a contract with the DoD by contracting The Office of Justice Programs, The Denial of Federal Benefits Office, U.S. Department of Justice, telephone (202) 616-3507.

9. RESERVED

10. *FAR 52.203-10 PRICE OR FEE ADJUSTMENT FOR ILLEGAL OR IMPROPER ACTIVITY (JAN 1997)

(a) The Government, at its election, may reduce the price of a fixed-price type contract and the total cost and fee under a cost-type contract of profit or fee determined as set forth in paragraph (b) of this clause if the head of the contracting activity or designee determines that there was a violation of subsection 27(a), (b), or (c) of the Office of Federal Procurement Policy Act, as amended (41 U.S.C. 423), as implemented in section 3.104 of the Federal Acquisition Regulation.

(b) The price or fee reduction referred to in paragraph (a) of this clause shall be--

(1) For cost-plus-fixed-fee contracts, the amount of the fee specified in the contract at the time of award;

(2) For cost-plus-incentive-fee contracts, the target fee specified in the contract at the time of award, notwithstanding any minimum fee or "fee floor" specified in the contract;

(3) For cost-plus-award-fee contracts--

(i) The base fee established in the contract at the time of contract award;

(ii) If no base fee is specified in the contract, 30 percent of the amount of each award fee otherwise payable to the Contractor for each award fee evaluation period or at each award fee determination point.

(4) For fixed-price-incentive contracts, the Government may--

(i) Reduce the contract target price and contract target profit both by an amount equal to the initial target profit specified in the contract at the time of contract award; or

(ii) If an immediate adjustment to the contract target price and contract target profit would have a significant adverse impact on the incentive price revision relationship under the contract, or adversely affect the contract financing provisions, the Contracting Officer may defer such adjustment until establishment of the total final price of the contract. The total final price established in accordance with the incentive price revision provisions of the contract shall be reduced by an amount equal to the initial target profit specified in the contract at the time of contract award and such reduced price shall be the total final contract price.

(5) For firm-fixed-price contracts, by 10 percent of the initial contract price or a profit amount determined by the Contracting Officer from records or documents in existence prior to the date of the contract award.

(c) The Government may, at its election, reduce a prime contractor's price or fee in accordance with the procedures of paragraph (b) of this clause for violations of the Act by its subcontractors by an amount not to exceed the amount of profit or fee reflected in the subcontract at the time the subcontract was first definitively priced.

(d) In addition to the remedies in paragraphs (a) and (c) of this clause, the Government may terminate this contract for default. The rights and remedies of the Government specified herein are not exclusive, and are in addition to any other rights and remedies provided by law or under this contract.

11. *FAR 52.203-12 LIMITATION ON PAYMENTS TO INFLUENCE CERTAIN FEDERAL TRANSACTIONS (JUNE 2003)

(a) Definitions.

"Agency," as used in this clause, means executive agency as defined in 2.101.

"Covered Federal Action," as used in this clause, means any of the following Federal actions:

(1) The awarding of any Federal contract.

(2) The making of any Federal grant.

(3) The making of any Federal loan.

(4) The entering into of any cooperative agreement.

(5) The extension, continuation, renewal, amendment, or modification of any Federal contract, grant, loan, or cooperative agreement.

"Indian tribe" and "tribal organization," as used in this clause, have the meaning provided in section 4 of the Indian Self-Determination and Education Assistance Act (25 U.S.C. 450B) and include Alaskan Natives.

"Influencing or attempting to influence," as used in this clause, means making, with the intent to influence, any communication to or appearance before an officer or employee of any agency, a Member of Congress, an officer or employee of Congress, or an employee of a Member of Congress in connection with any covered Federal action.

"Local government," as used in this clause, means a unit of government in a State and, if chartered, established, or otherwise recognized by a State for the performance of a governmental duty, including a local public authority, a special district, an intrastate district, a council of governments, a sponsor group representative organization, and any other instrumentality of a local government.

"Officer or employee of an agency," as used in this clause, includes the following individuals who are employed by an agency:

(1) An individual who is appointed to a position in the Government under title 5, United States Code, including a position under a temporary appointment.

(2) A member of the uniformed services, as defined in subsection 101(3), title 37, United States Code.

(3) A special Government employee, as defined in section 202, title 18, United States Code.

(4) An individual who is a member of a Federal advisory committee, as defined by the Federal Advisory Committee Act, title 5, United States Code, appendix 2.

"Person," as used in this clause, means an individual, corporation, company, association, authority, firm, partnership, society, State and local government, regardless of whether such entity is operated for profit, or not for profit. This term excludes an Indian tribe, tribal organization, or any other Indian organization with respect to expenditures specifically permitted by other Federal law.

"Reasonable compensation," as used in this clause, means, with respect to a regularly employed officer or employee of any person, compensation that is consistent with the normal compensation for such officer or employee for work that is not furnished to, not funded by, or not furnished in cooperation with the Federal Government.

"Reasonable payment," as used in this clause, means, with respect to professional and other technical services, a payment in an amount that is consistent with the amount normally paid for such services in the private sector.

"Recipient," as used in this clause, includes the Contractor and all subcontractors. This term excludes an Indian tribe, tribal organization, or any other Indian organization with respect to expenditures specifically permitted by other Federal law.

"Regularly employed," as used in this clause, means, with respect to an officer or employee of a person requesting or receiving a Federal contract, an officer or employee who is employed by such person for at least 130 working days within 1 year immediately preceding the date of the submission that initiates agency consideration of such person for receipt of such contract. An officer or employee who is employed by such person for less than 130 working days within 1 year immediately preceding the date of the submission that initiates agency consideration of such person shall be considered to be regularly employed as soon as he or she is employed by such person for 130 working days.

"State," as used in this clause, means a State of the United States, the District of Columbia, or an outlying area of the United States, an agency or instrumentality of a State, and multi-State, regional, or interstate entity having governmental duties and powers.

(b) Prohibitions.

(1) Section 1352 of title 31, United States Code, among other things, prohibits a recipient of a Federal Contract, grant, loan, or cooperative agreement from using appropriated funds to pay any person for influencing or attempting to influence an officer or employee of any agency, a Member of Congress, an officer or employee of Congress, or an employee of a Member of Congress in connection with any of the following covered Federal actions: The awarding of any Federal contract; the making of any Federal grant; the making of any Federal loan; the entering into of any cooperative agreement; or the modification of any Federal contract, grant, loan, or cooperative agreement.

(2) The Act also requires Contractors to furnish a disclosure if any funds other than Federal appropriated funds (including profit or fee received under a covered Federal transaction) have been paid, or will be paid, to any person for influencing or attempting to influence an officer or employee of any agency, a Member of Congress, an officer or employee of Congress, or an employee of a Member of Congress in connection with a Federal contract, grant, loan, or cooperative agreement.

(3) The prohibitions of the Act do not apply under the following conditions:

(i) Agency and legislative liaison by own employees.

(A) The prohibition on the use of appropriated funds, in subparagraph (b)(1) of this clause, does not apply in the case of a payment of reasonable compensation made to an officer or employee of a person requesting or receiving a covered Federal action if the payment is for agency and legislative liaison activities not directly related to a covered Federal action.

(B) For purposes of subdivision (b)(3)(i)(A) of this clause, providing any information specifically requested by an agency or Congress is permitted at any time.

(C) The following agency and legislative liaison activities are permitted at any time where they are not related to a specific solicitation for any covered Federal action:

(1) Discussing with an agency the qualities and characteristics (including individual demonstrations) of the person's products or services, conditions or terms of sale, and service capabilities.

(2) Technical discussions and other activities regarding the application or adaptation of the person's products or services for an agency's use.

(D) The following agency and legislative liaison activities are permitted where they are prior to formal solicitation of any covered Federal action--

(1) Providing any information not specifically requested but necessary for an agency to make an informed decision about initiation of a covered Federal action;

(2) Technical discussions regarding the preparation of an unsolicited proposal prior to its official submission; and

(3) Capability presentations by persons seeking awards from an agency pursuant to the provisions of the Small Business Act, as amended by Pub. L. 95-507, and subsequent amendments.

(E) Only those services expressly authorized by subdivision (b)(3)(i)(A) of this clause are permitted under this clause.

(ii) Professional and technical services.

(A) The prohibition on the use of appropriated funds, in subparagraph (b)(1) of this clause, does not apply in the case of--

(1) A payment of reasonable compensation made to an officer or employee f a person requesting or receiving a covered Federal action or an extension, continuation, renewal, amendment, or modification of a covered Federal action, if payment is for professional or technical services rendered directly in the preparation, submission, or negotiation of any bid, proposal, or application for that Federal action or for meeting requirements imposed by or pursuant to law as a condition for receiving that Federal action.

(2) Any reasonable payment to a person, other than an officer or employee of a person requesting or receiving a covered Federal action or an extension, continuation, renewal, amendment, or modification of a covered Federal action if the payment is for professional or technical services rendered directly in the preparation, submission, or negotiation of any bid, proposal, or application for that Federal action or for meeting requirements imposed by or pursuant to law as a condition for receiving that Federal action. Persons other than officers or employees of a person requesting or receiving a covered Federal action include consultants and trade associations.

(B) For purposes of subdivision (b)(3)(ii)(A) of this clause, "professional and technical services" shall be limited to advice and analysis directly applying any professional or technical discipline. For example, drafting of a legal document accompanying a bid or proposal by a lawyer is allowable. Similarly, technical advice provided by an engineer on the performance or operational capability of a piece of equipment rendered directly in the negotiation of a contract is allowable. However, communications with the intent to influence made by a professional (such as a licensed lawyer) or a technical person (such as a licensed accountant) are not allowable under this section unless they provide advice and analysis directly applying their professional or technical expertise and unless the advice or analysis is rendered directly and solely in the preparation, submission or negotiation of a covered Federal action. Thus, for example, communications with the intent to influence made by a lawyer that do not provide legal advice or analysis directly and solely related to the legal aspects of his or her client's proposal, but generally advocate one proposal over another are not allowable under this section because the lawyer is not providing professional legal services. Similarly, communications with the intent to influence made by an engineer providing an engineering analysis prior to the preparation or submission of a bid or proposal are not

allowable under this section since the engineer is providing technical services but not directly in the preparation, submission or negotiation of a covered Federal action.

(C) Requirements imposed by or pursuant to law as a condition for receiving a covered Federal award include those required by law or regulation and any other requirements in the actual award documents.

(D) Only those services expressly authorized by subdivisions (b)(3)(ii)(A)(1) and (2) of this clause are permitted under this clause.

(E) The reporting requirements of FAR 3.803(a) shall not apply with respect to payments of reasonable compensation made to regularly employed officers or employees of a person.

(iii) Disclosure.

(A) The Contractor who requests or receives from an agency a Federal contract shall file with that agency a disclosure form, OMB standard form LLL, Disclosure of Lobbying Activities, if such person has made or has agreed to make any payment using nonappropriated funds (to include profits from any covered Federal action), which would be prohibited under subparagraph (b)(1) of this clause, if paid for with appropriated funds.

(B) The Contractor shall file a disclosure form at the end of each calendar quarter in which there occurs any event that materially affects the accuracy of the information contained in any disclosure form previously filed by such person under subparagraph (c)(1) of this clause. An event that materially affects the accuracy of the information reported includes--

(1) A cumulative increase of $25,000 or more in the amount paid or expected to be paid for influencing or attempting to influence a covered Federal action; or

(2) A change in the person(s) or individual(s) influencing or attempting to influence a covered Federal action; or

(3) A change in the officer(s), employee(s), or Member(s) contacted to influence or attempt to influence a covered Federal action.

(C) The Contractor shall require the submittal of a certification, and if required, a disclosure form by any person who requests or receives any subcontract exceeding $100,000 under the Federal contract.

(D) All subcontractor disclosure forms (but not certifications) shall be forwarded from tier to tier until received by the prime Contractor. The prime Contractor shall submit all disclosures to the Contracting Officer at the end of the calendar quarter in which the disclosure form is submitted by the subcontractor. Each subcontractor certification shall be retained in the subcontract file of the awarding Contractor.

(iv) Agreement. The Contractor agrees not to make any payment prohibited by this clause.

(v) Penalties.

(A) Any person who makes an expenditure prohibited under paragraph (a) of this clause or who fails to file or amend the disclosure form to be filed or amended by paragraph (b) of this clause shall be subject to civil penalties as provided for by 31 U.S.C. 1352. An imposition of a civil penalty does not prevent the Government from seeking any other remedy that may be applicable.

(B) Contractors may rely without liability on the representation made by their subcontractors in the certification and disclosure form.

(vi) Cost allowability. Nothing in this clause makes allowable or reasonable any costs which would otherwise be unallowable or unreasonable. Conversely, costs made specifically unallowable by the requirements in this clause will not be made allowable under any other provision.

12. DFARS 252.203-7002 DISPLAY OF DOD HOTLINE POSTER (DEC 1991)
(<u>For Military Contracts Exceeding $5,000,000</u>)

(a) The Contractor shall display prominently in common work areas within business segments performing work under Department of Defense (DoD) contracts, DoD Hotline Posters prepared by DoD Office of the Inspector General.

(b) DoD Hotline Posters may be obtained from the DoD Inspector General, ATTN: Defense Hotline, 400 Army Navy Drive, Washington DC 22202-2884.

(c) The Contract need not comply with paragraph (a) of this clause if it has established a mechanism, such as a hotline, by which employees may report suspected instances of improper conduct, and instructions that encourage employees to make such reports.

13. *FAR 52.204-4 PRINTED OR COPIED DOUBLE-SIDED ON RECYCLED PAPER (AUG 2000)

(a) Definitions. As used in this clause—

"Postconsumer material" means a material or finished product that has served its intended use and has been discarded for disposal or recovery, having completed its life as a consumer item. Postconsumer material is a part of the broader category of "recovered material." For paper and paper products, postconsumer material means "postconsumer fiber" defined by the U.S. Environmental Protection Agency (EPA) as—

(1) Paper, paperboard, and fibrous materials from retail stores, office buildings, homes, and so forth, after they have passed through their end-usage as a consumer item, including: used corrugated boxes; old newspapers; old magazines; mixed waste paper; tabulating cards; and used cordage; or

(2) All paper, paperboard, and fibrous materials that enter and are collected from municipal solid waste; but not

(3) Fiber derived from printers' over-runs, converters' scrap, and over-issue publications.

"Printed or copied double-sided" means printing or reproducing a document so that information is on both sides of a sheet of paper.

"Recovered material," for paper and paper products, is defined by EPA in its Comprehensive Procurement Guideline as "recovered fiber" and means the following materials:

(1) Postconsumer fiber; and

(2) Manufacturing wastes such as—

(i) Dry paper and paperboard waste generated after completion of the papermaking process (that is, those manufacturing operations up to and including the cutting and trimming of the paper machine reel into smaller rolls or rough sheets) including: envelope cuttings, bindery trimmings, and other paper and paperboard waste resulting from printing, cutting, forming, and other converting operations; bag, box, and carton manufacturing wastes; and butt rolls, mill wrappers, and rejected unused stock; and

(ii) Repulped finished paper and paperboard from obsolete inventories of paper and paperboard manufacturers, merchants, wholesalers, dealers, printers, converters, or others.

(b) In accordance with Section 101 of Executive Order 13101 of September 14, 1998, Greening the Government through Waste Prevention, Recycling, and Federal Acquisition, the Contractor is encouraged to submit paper documents, such as offers, letters, or reports, that are printed or copied double-sided on recycled paper that meet minimum content standards specified in Section 505 of Executive Order 13101, when not using electronic commerce methods to submit information or data to the Government.

(c) If the Contractor cannot purchase high-speed copier paper, offset paper, forms bond, computer printout paper, carbonless paper, file folders, white wove envelopes, writing and office paper, book paper, cotton fiber paper, and cover stock meeting the 30 percent postconsumer material standard for use in submitting paper documents to the Government, it should use paper containing no less than 20 percent postconsumer material. This lesser standard should be used only when paper meeting the 30 percent postconsumer material standard is not obtainable at a reasonable price or does not meet reasonable performance standards.

(End of clause)

14. DFARS 252.204-7003 CONTROL OF GOVERNMENT PERSONNEL WORK PRODUCT (APR 1992)

The Contractor's procedures for protecting against unauthorized disclosure of information shall not require Department of Defense employees or members of the Armed Forces to relinquish control of their work products, whether classified or not, to the Contractor.

15. *FAR 52.209-6 PROTECTING THE GOVERNMENTS INTEREST WHEN SUBCONTRACTING WITH CONTRACTORS DEBARRED, SUSPENDED, OR PROPOSED FOR DEBARMENT (JUL 1995)

(a) The Government suspends or debars Contractors to protect the Government's interests. The Contractor shall not enter into any subcontract in excess of $25,000 with a Contractor that is debarred, suspended, or proposed for debarment unless there is a compelling reason to do so.

(b) The Contractor shall require each proposed first-tier subcontractor, whose subcontract will exceed $25,000, to disclose to the Contractor, in writing, whether as of the time of award of the subcontract, the subcontractor, or its principals, is or is not debarred, suspended, or proposed for debarment by the Federal Government.

(c) A corporate office or a designee of the Contractor shall notify the Contracting Officer, in writing, before entering into a subcontract with a party that is debarred, suspended, or proposed for debarment (see FAR 9.404 for information on the List of Parties Excluded from Procurement Programs). The notice must include the following:

(1) The name of the subcontractor.

(2) The Contractor's knowledge of the reasons for the subcontractor being on the List of Parties Excluded from Procurement Programs.

(3) The compelling reason(s) for doing business with the subcontractor notwithstanding its inclusion on the List of Parties Excluded From Procurement Programs.

(4) The systems and procedures the Contractor has established to ensure that it is fully protecting the Government's interests when dealing with such subcontractor in view of the specific basis for the party's debarment, suspension, or proposed debarment.

16. DFARS 252.209-7004 SUBCONTRACTING WITH FIRMS THAT ARE OWNED OR CONTROLLED BY THE GOVERNMENT OF A TERRORIST COUNTY (MAR 1998)

(a) Unless the Government determines that there is a compelling reason to do so, the Contractor shall not enter into any subcontract in excess of $25,000 with a firm, or a subsidiary of a firm, that is identified, on the List of Parties Excluded from Federal Procurement and Nonprocurement Programs, as being ineligible for the award of Defense contracts or subcontracts because it is owned or controlled by the government of a terrorist country.

(b) A corporate officer or a designee of the Contractor shall notify the Contracting Officer, in writing, before entering into a subcontract with a party that is identified, on the List of Parties Excluded from Federal Procurement and Nonprocurement Programs, as being ineligible for the award of Defense contracts or subcontracts because it is owned or controlled by the government of a terrorist country. The notice must include the name of the proposed subcontractor and the compelling reason(s) for doing business with the subcontractor notwithstanding its inclusion on the List of Parties Excluded From Federal Procurement and Nonprocurement Programs.

(End of clause)

17. *FAR 52.211-15 DEFENSE PRIORITY AND ALLOCATION REQUIREMENTS (SEP 1990) [<u>For Military Contract's Only</u>]

This is a rated order certified for national defense use, and the Contractor shall follow all the requirements of the Defense Priorities and Allocations System regulation (15 CFR 700).

18. DELETED~~FAR 52.211-18 VARIATION IN ESTIMATED QUANTITY (APR 1984)~~

~~If the quantity of a unit-priced item in this contract is an estimated quantity and the actual quantity of the unit-priced item varies more than 15 percent above or below the estimated quantity, an equitable adjustment in the contract price shall be made upon demand of either party. The equitable adjustment shall be based upon any increase or decrease in costs due solely to the variation above 115 percent or below 85 percent of the estimated quantity. If the quantity variation is such as to cause an increase in the time necessary for completion, the Contractor may request, in writing, an extension of time, to be received by the Contracting Officer within 10 days from the beginning of the delay, or within such further period as may be granted by the Contracting Officer before the date of final settlement of the contract. Upon the receipt of a written request for an extension, the Contracting Officer shall ascertain the facts and make an adjustment for extending the completion date as, in the judgement of the Contracting Officer, is justified.~~

19. *FAR 52.215-2 AUDIT AND RECORDS-NEGOTIATION (JUNE 1999)

(a) As used in this clause, "records" includes books, documents, accounting procedures and practices, and other data, regardless of type and regardless of whether such items are in written form, in the form of computer data, or in any other form.

(b) Examination of costs. If this is a cost-reimbursement, incentive, time-and-materials, labor-hour, or price redeterminable contract, or any combination of these, the Contractor shall maintain and the Contracting Officer, or an authorized representative of the Contracting Officer, shall have the right to examine and audit all records and other evidence sufficient to reflect properly all costs claimed to have been incurred or anticipated to be incurred directly or indirectly in performance of this contract. This right of examination shall include inspection at all reasonable times of the Contractor's plants, or parts of them, engaged in performing the contract.

(c) Cost or pricing data. If the Contractor has been required to submit cost or pricing data in connection with any pricing action relating to this contract, the Contracting Officer, or an authorized representative of the Contracting Officer, in order to evaluate the accuracy, completeness, and currency of the cost or pricing data, shall have the right to examine and audit all of the Contractor's records, including computations and projections, related to--

(1) The proposal for the contract, subcontract, or modification;

(2) The discussions conducted on the proposal(s), including those related to negotiating;

(3) Pricing of the contract, subcontract, or modification; or

(4) Performance of the contract, subcontract or modification.

(d) Comptroller General--(1) The Comptroller General of the United States, or an authorized representative, shall have access to and the right to examine any of the Contractor's directly pertinent records involving transactions related to this contract or a subcontract hereunder.

(2) This paragraph may not be construed to require the Contractor or subcontractor to create or maintain any record that the Contractor or subcontractor does not maintain in the ordinary course of business or pursuant to a provision of law.

(e) Reports. If the Contractor is required to furnish cost, funding, or performance reports, the Contracting Officer or an authorized representative of the Contracting Officer shall have the right to examine and audit the supporting records and materials, for the purpose of evaluating--

(1) The effectiveness of the Contractor's policies and procedures to produce data compatible with the objectives of these reports; and

(2) The data reported.

(f) Availability. The Contractor shall make available at its office at all reasonable times the records, materials, and other evidence described in paragraphs (a), (b), (c), (d), and (e) of this clause, for examination, audit, or reproduction, until 3 years after final payment under this contract or for any shorter period specified in Subpart 4.7, Contractor Records Retention, of the Federal Acquisition Regulation (FAR), or for any longer period required by statute or by other clauses of this contract. In addition--

(1) If this contract is completely or partially terminated, the Contractor shall make available the records relating to the work terminated until 3 years after any resulting final termination settlement; and

(2) The Contractor shall make available records relating to appeals under the Disputes clause or to litigation or the settlement of claims arising under or relating to this contract shall be made available until such appeals, litigation, or claims are finally resolved.

(g) The Contractor shall insert a clause containing all the terms of this clause, including this paragraph (g), in all subcontracts under this contract that exceed the simplified acquisition threshold, and--

(1) That are cost-reimbursement, incentive, time-and-materials, labor-hour, or price-redeterminable type or any combination of these;

(2) For which cost or pricing data are required; or

(3) That require the subcontractor to furnish reports as discussed in paragraph (e) of this clause.

The clause may be altered only as necessary to identify properly the contracting parties and the Contracting Officer under the Government prime contract.

(End of clause)

20. *FAR 52.215-10 PRICE REDUCTION FOR DEFECTIVE COST OR PRICING DATA (OCT 1997)

(a) If any price, including profit or fee, negotiated in connection with this contract, or any cost reimbursable under this contract, was increased by any significant amount because--

(1) The Contractor or a subcontractor furnished cost or pricing data that were not complete, accurate, and current as certified in its Certificate of Current Cost or Pricing Data;

(2) A subcontractor or prospective subcontractor furnished the Contractor cost or pricing data that were not complete, accurate, and current as certified in the Contractor's Certificate of Current Cost or Pricing Data; or

(3) Any of these parties furnished data of any description that were not accurate, the price or cost shall be reduced accordingly and the contract shall be modified to reflect the reduction.

(b) Any reduction in the contract price under paragraph (a) of this clause due to defective data from a prospective subcontractor that was not subsequently awarded the subcontract shall be limited to the amount, plus applicable overhead and profit markup, by which--

(1) The actual subcontract; or

(2) The actual cost to the Contractor, if there was no subcontract, was less than the prospective subcontract cost estimate submitted by the Contractor; provided, that the actual subcontract price was not itself affected by defective cost or pricing data.

(c)(1) If the Contracting Officer determines under paragraph (a) of this clause that a price or cost reduction should be made, the Contractor agrees not to raise the following matters as a defense:

(i) The Contractor or subcontractor was a sole source supplier or otherwise was in a superior bargaining position and thus the price of the contract would not have been modified even if accurate, complete, and current cost or pricing data had been submitted.

(ii) The Contracting Officer should have known that the cost or pricing data in issue were defective even though the Contractor or subcontractor took no affirmative action to bring the character of the data to the attention of the Contracting Officer.

(iii) The contract was based on an agreement about the total cost of the contract and there was no agreement about the cost of each item procured under the contract.

(iv) The Contractor or subcontractor did not submit a Certificate of Current Cost or Pricing Data.

(2)(i) Except as prohibited by subdivision (c)(2)(ii) of this clause, an offset in an amount determined appropriate by the (2)(i) Except as prohibited by subdivision (c)(2)(ii) of this clause, an offset in an amount determined appropriate by the Contracting Officer based upon the facts shall be allowed against the amount of a contract price reduction if--

(A) The Contractor certifies to the Contracting Officer that, to the best of the Contractor's knowledge and belief, the Contractor is entitled to the offset in the amount requested; and

(B) The Contractor proves that the cost or pricing data were available before the "as of" date specified on its Certificate of Current Cost or Pricing Data, and that the data were not submitted before such date.

(ii) An offset shall not be allowed if--

(A) The understated data were known by the Contractor to be understated before the "as of" date specified on its Certificate of Current Cost or Pricing Data; or

(B) The Government proves that the facts demonstrate that the contract price would not have increased in the amount to be offset even if the available data had been submitted before the "as of" date specified on its Certificate of Current Cost or Pricing Data.

(d) If any reduction in the contract price under this clause reduces the price of items for which payment was made prior to the date of the modification reflecting the price reduction, the Contractor shall be liable to and shall pay the United States at the time such overpayment is repaid--

(1) Simple interest on the amount of such overpayment to be computed from the date(s) of overpayment to the Contractor to the date the Government is repaid by the Contractor at the applicable underpayment rate effective for each quarter prescribed by the Secretary of the Treasury under 26 U.S.C. 6621(a)(2); and

(2) A penalty equal to the amount of the overpayment, if the Contractor or subcontractor knowingly submitted cost or pricing data that were incomplete, inaccurate, or noncurrent.

(End of clause)

21. *FAR 52.215-12 SUBCONTRACTOR COST OR PRICING DATA (OCT 1997)

(a) Before awarding any subcontract expected to exceed the threshold for submission of cost or pricing data at FAR 15.403-4, on the date of agreement on price or the date of award, whichever is later; or before pricing any subcontract modification involving a pricing adjustment expected to exceed the threshold for submission of cost or pricing data at FAR 15.403-4, the Contractor shall require the subcontractor to submit cost or pricing data (actually or by specific identification in writing), unless an exception under FAR 15.403-1 applies.

(b) The Contractor shall require the subcontractor to certify in substantially the form prescribed in FAR 15.406-2 that, to the best of its knowledge and belief, the data submitted under paragraph (a) of this clause were accurate, complete, and current as of the date of agreement on the negotiated price of the subcontract or subcontract modification.

(c) In each subcontract that exceeds the threshold for submission of cost or pricing data at FAR 15.403-4, when entered into, the Contractor shall insert either--

(1) The substance of this clause, including this paragraph (c), if paragraph (a) of this clause requires submission of cost or pricing data for the subcontract; or

(2) The substance of the clause at FAR 52.215-13, Subcontractor Cost or Pricing Data--Modifications.

(End of clause)

22. *FAR 52.215-15 PENSION ADJUSTMENTS AND ASSET REVERSIONS (DEC 1998)

(a) The Contractor shall promptly notify the Contracting Officer in writing when it determines that it will terminate a defined-benefit pension plan or otherwise recapture such pension fund assets.

(b) For segment closings, pension plan terminations, or curtailment of benefits, the adjustment amount shall be the amount measured, assigned, and allocated in accordance with 48 CFR 9904.413-50(c)(12) for contracts and subcontracts that are subject to Cost Accounting Standards (CAS) Board rules and regulations (48 CFR Chapter 99). For contracts and subcontracts that are not subject to CAS, the adjustment amount shall be the amount measured, assigned, and allocated in accordance with 48 CFR 9904.413-50(c)(12), except the numerator of the fraction at 48 CFR 9904.413-50(c)(12)(vi) shall be the sum of the pension plan costs allocated to all non-CAS-covered contracts and subcontracts that are subject to Federal Acquisition Regulation (FAR) Subpart 31.2 or for which cost or pricing data were submitted.

(c) For all other situations where assets revert to the Contractor, or such assets are constructively received by it for any reason, the Contractor shall, at the Government's option, make a refund or give a credit to the Government for its equitable share of the gross amount withdrawn. The Government's equitable share shall reflect the Government's participation in pension costs through those contracts for which cost or pricing data were submitted or that are subject to FAR Subpart 31.2.

(d) The Contractor shall include the substance of this clause in all subcontracts under this contract that meet the applicability requirement of FAR 15.408(g).

(End of clause)

23. *FAR 52.215-16 FACILITIES CAPITAL COST OF MONEY (JUNE 2003)

(a) Facilities capital cost of money will be an allowable cost under the contemplated contract, if the criteria for allowability in FAR 31.205-10(b) are met. One of the allowability criteria requires the prospective contractor to propose facilities capital cost of money in its offer.

(b) If the prospective Contractor does not propose this cost, the resulting contract will include the clause Waiver of Facilities Capital Cost of Money.

(End of provision)

24. *FAR 52.215-17 WAIVER OF FACILITIES CAPITAL COST OF MONEY (OCT 1997)

The Contractor did not include facilities capital cost of money as a proposed cost of this contract. Therefore, it is an unallowable cost under this contract.

(End of clause)

25. *FAR 52.215-18 REVERSION OR ADJUSTMENT OF PLANS FOR POST RETIREMENT BENEFITS (PRB) OTHER THAN PENSIONS (OCT 1997)

The Contractor shall promptly notify the Contracting Officer in writing when it determines that it will terminate or reduce a PRB plan. If PRB fund assets revert, or inure, to the Contractor or are constructively received by it under a plan termination or otherwise, the Contractor shall make a refund or give a credit to the Government for its equitable share as required by FAR 31.205-6(o)(6). The Contractor shall include the substance of this clause in all subcontracts under this contract that meet the applicability requirements of FAR 15.408(j).

(End of clause)

26. *FAR 52.219-4 NOTICE OF PRICE EVALUATION PREFERENCE FOR HUBZONE SMALL BUSINESS CONCERNS (JAN 1999)

(a) *Definition*. "HUBZone small business concern," as used in this clause, means a small business concern that appears on the List of Qualified HUBZone Small Business Concerns maintained by the Small Business Administration.

(b) *Evaluation preference*. (1) Offers will be evaluated by adding a factor of 10 percent to the price of all offers, except—

(i) Offers from HUBZone small business concerns that have not waived the evaluation preference;

(ii) Otherwise successful offers from small business concerns;

(iii) Otherwise successful offers of eligible products under the Trade Agreements Act when the dollar threshold for application of the Act is exceeded (see 25.402 of the Federal Acquisition Regulation (FAR)); and

(iv) Otherwise successful offers where application of the factor would be inconsistent with a Memorandum of Understanding or other international agreement with a foreign government.

(2) The factor of 10 percent shall be applied on a line item basis or to any group of items on which award may be made. Other evaluation factors described in the solicitation shall be applied before application of the factor.

(3) A concern that is both a HUBZone small business concern and a small disadvantaged business concern will receive the benefit of both the HUBZone small business price evaluation preference and the small disadvantaged business price evaluation adjustment (see FAR clause 52.219-23). Each applicable price evaluation

preference or adjustment shall be calculated independently against an offeror's base offer. These individual preference amounts shall be added together to arrive at the total evaluated price for that offer.

(c) *Waiver of evaluation preference*. A HUBZone small business concern may elect to waive the evaluation preference, in which case the factor will be added to its offer for evaluation purposes. The agreements in paragraph (d) of this clause do not apply if the offeror has waived the evaluation preference.

[ ] Offeror elects to waive the evaluation preference.

(d) *Agreement*. A HUBZone small business concern agrees that in the performance of the contract, in the case of a contract for—

(1) Services (except construction), at least 50 percent of the cost of personnel for contract performance will be spent for employees of the concern or employees of other HUBZone small business concerns;

(2) Supplies (other than procurement from a nonmanufacturer of such supplies), at least 50 percent of the cost of manufacturing, excluding the cost of materials, will be performed by the concern or other HUBZone small business concerns;

(3) General construction, at least 15 percent of the cost of the contract performance incurred for personnel will be will be spent on the concern's employees or the employees of other HUBZone small business concerns; or

(4) Construction by special trade contractors, at least 25 percent of the cost of the contract performance incurred for personnel will be spent on the concern's employees or the employees of other HUBZone small business concerns.

(e) A HUBZone joint venture agrees that in the performance of the contract, the applicable percentage specified in paragraph (d) of this clause will be performed by the HUBZone small business participant or participants.

(f) A HUBZone small business concern nonmanufacturer agrees to furnish in performing this contract only end items manufactured or produced by HUBZone small business manufacturer concerns. This paragraph does not apply in connection with construction or service contracts.

(End of clause)

27. *FAR 52.219-8 UTILIZATION OF SMALL BUSINESS CONCERNS (OCT 2000)

(a) It is the policy of the United States that small business concerns, veteran-owned small business concerns, service-disabled veteran-owned small business concerns, HUBZone small business concerns, small disadvantaged business concerns, and women-owned small business concerns shall have the maximum practicable opportunity to participate in performing contracts let by any Federal agency, including contracts and subcontracts for subsystems, assemblies, components, and related services for major systems. It is further the policy of the United States that its prime contractors establish procedures to ensure the timely payment of amounts due pursuant to the terms of their subcontracts with small business concerns, veteran-owned small business concerns, service-disabled veteran-owned small business concerns, HUBZone small business concerns, small disadvantaged business concerns, and women-owned small business concerns.

(b) The Contractor hereby agrees to carry out this policy in the awarding of subcontracts to the fullest extent consistent with efficient contract performance. The Contractor further agrees to cooperate in any studies or surveys as may be conducted by the United States Small Business Administration or the awarding agency of the United States as may be necessary to determine the extent of the Contractor ’s compliance with this clause.

(c) *Definitions*. As used in this contract—

“HUBZone small business concern” means a small business concern that appears on the List of Qualified HUBZone Small Business Concerns maintained by the Small Business Administration .

“Service-disabled veteran-owned small business concern ” —

(1) Means a small business concern—

(i) Not less than 51 percent of which is owned by one or more service-disabled veterans or, in the case of any publicly owned business, not less than 51 percent of the stock of which is owned by one or more service-disabled veterans; and

(ii) The management and daily business operations of which are controlled by one or more service-disabled veterans or, in the case of a veteran with permanent and severe disability, the spouse or

permanent caregiver of such veteran.

(2) Service-disabled veteran means a veteran, as defined in 38 U.S.C. 101(2), with a disability that is service-connected, as defined in 38 U.S.C. 101(16).

"Small business concern" means a small business as defined pursuant to Section 3 of the Small Business Act and relevant regulations promulgated pursuant thereto.

"Small disadvantaged business concern" means a small business concern that represents, as part of its offer that—

(1) It has received certification as a small disadvantaged business concern consistent with 13 CFR part 124, Subpart B;

(2) No material change in disadvantaged ownership and control has occurred since its certification;

(3) Where the concern is owned by one or more individuals, the net worth of each individual upon whom the certification is based does not exceed $750,000 after taking into account the applicable exclusions set forth at 13 CFR 124.104(c)(2); and

(4) It is identified, on the date of its representation, as a certified small disadvantaged business in the database maintained by the Small Business Administration (PRO-Net).

"Veteran-owned small business concern" means a small business concern—

(1) Not less than 51 percent of which is owned by one or more veterans (as defined at 38 U.S.C. 101(2)) or, in the case of any publicly owned business, not less than 51 percent of the stock of which is owned by one or more veterans; and

(2) The management and daily business operations of which are controlled by one or more veterans.

"Women-owned small business concern" means a small business concern—

(1) That is at least 51 percent owned by one or more women, or, in the case of any publicly owned business, at least 51 percent of the stock of which is owned by one or more women; and

(2) Whose management and daily business operations are controlled by one or more women.

(d) Contractors acting in good faith may rely on written representations by their subcontractors regarding their status as a small business concern, a veteran-owned small business concern, a service-disabled veteran-owned small business concern, a HUBZone small business concern, a small disadvantaged business concern, or a women-owned small business concern.

(End of clause)

28. *FAR 52.219-9 SMALL BUSINESS SUBCONTRACTING PLAN (JAN 2002) [When Contracting By Negotiations]

(a) This clause does not apply to small business concerns.

(b) *Definitions*. As used in this clause—

"Commercial item" means a product or service that satisfies the definition of commercial item in section 2.101 of the Federal Acquisition Regulation.

"Commercial plan" means a subcontracting plan (including goals) that covers the offeror's fiscal year and that applies to the entire production of commercial items sold by either the entire company or a portion thereof (*e.g.*, division, plant, or product line).

"Individual contract plan" means a subcontracting plan that covers the entire contract period (including option periods), applies to a specific contract, and has goals that are based on the offeror's planned subcontracting in support of the specific contract, except that indirect costs incurred for common or joint purposes may be allocated on a prorated basis to the contract.

"Master plan" means a subcontracting plan that contains all the required elements of an individual contract plan, except goals, and may be incorporated into individual contract plans, provided the master plan has been approved.

"Subcontract" means any agreement (other than one involving an employer-employee relationship) entered into by a Federal Government prime Contractor or subcontractor calling for supplies or services required for performance of the contract or subcontract.

(c) The offeror, upon request by the Contracting Officer, shall submit and negotiate a subcontracting plan,

where applicable, that separately addresses subcontracting with small business, veteran-owned small business, service-disabled veteran-owned small business, HUBZone small business concerns, small disadvantaged business, and women-owned small business concerns. If the offeror is submitting an individual contract plan, the plan must separately address subcontracting with small business, veteran-owned small business, service-disabled veteran-owned small business, HUBZone small business, small disadvantaged business, and women-owned small business concerns, with a separate part for the basic contract and separate parts for each option (if any). The plan shall be included in and made a part of the resultant contract. The subcontracting plan shall be negotiated within the time specified by the Contracting Officer. Failure to submit and negotiate the subcontracting plan shall make the offeror ineligible for award of a contract.

(d) The offeror's subcontracting plan shall include the following:

(1) Goals, expressed in terms of percentages of total planned subcontracting dollars, for the use of small business, veteran-owned small business, service-disabled veteran-owned small business, HUBZone small business, small disadvantaged business, and women-owned small business concerns as subcontractors. The offeror shall include all subcontracts that contribute to contract performance, and may include a proportionate share of products and services that are normally allocated as indirect costs.

(2) A statement of—

(i) Total dollars planned to be subcontracted for an individual contract plan; or the offeror's total projected sales, expressed in dollars, and the total value of projected subcontracts to support the sales for a commercial plan;

(ii) Total dollars planned to be subcontracted to small business concerns;

(iii) Total dollars planned to be subcontracted to veteran-owned small business concerns;

(iv) Total dollars planned to be subcontracted to service-disabled veteran-owned small business;

(v) Total dollars planned to be subcontracted to HUBZone small business concerns;

(vi) Total dollars planned to be subcontracted to small disadvantaged business concerns; and

(vii) Total dollars planned to be subcontracted to women-owned small business concerns.

(3) A description of the principal types of supplies and services to be subcontracted, and an identification of the types planned for subcontracting to—

(i) Small business concerns;

(ii) Veteran-owned small business concerns;

(iii) Service-disabled veteran-owned small business concerns;

(iv) HUBZone small business concerns;

(v) Small disadvantaged business concerns; and

(vi) Women-owned small business concerns.

(4) A description of the method used to develop the subcontracting goals in paragraph (d)(1) of this clause.

(5) A description of the method used to identify potential sources for solicitation purposes (*e.g.*, existing company source lists, the Procurement Marketing and Access Network (PRO-Net) of the Small Business Administration (SBA), veterans service organizations, the National Minority Purchasing Council Vendor Information Service, the Research and Information Division of the Minority Business Development Agency in the Department of Commerce, or small, HUBZone, small disadvantaged, and women-owned small business trade associations). A firm may rely on the information contained in PRO-Net as an accurate representation of a concern's size and ownership characteristics for the purposes of maintaining a small, veteran-owned small, service-disabled veteran-owned small, HUBZone small, small disadvantaged, and women-owned small business source list. Use of PRONet as its source list does not relieve a firm of its responsibilities (*e.g.*, outreach, assistance, counseling, or publicizing subcontracting opportunities) in this clause.

(6) A statement as to whether or not the offeror included indirect costs in establishing subcontracting goals, and a description of the method used to determine the proportionate share of indirect costs to be incurred with—

(i) Small business concerns;

(ii) Veteran-owned small business concerns;

(iii) Service-disabled veteran-owned small business concerns;

(iv) HUBZone small business concerns;

(v) Small disadvantaged business concerns; and

(vi) Women-owned small business concerns.

(7) The name of the individual employed by the offeror who will administer the offeror's subcontracting program, and a description of the duties of the individual.

(8) A description of the efforts the offeror will make to assure that small business, veteran-owned small business, service-disabled veteran-owned small business, HUBZone small business, small disadvantaged business, and women-owned small business concerns have an equitable opportunity to compete for subcontracts.

(9) Assurances that the offeror will include the clause of this contract entitled "Utilization of Small Business Concerns" in all subcontracts that offer further subcontracting opportunities, and that the offeror will require all subcontractors (except small business concerns) that receive subcontracts in excess of $500,000 ($1,000,000 for construction of any public facility) to adopt a subcontracting plan that complies with the requirements of this clause.

(10) Assurances that the offeror will—

(i) Cooperate in any studies or surveys as may be required;

(ii) Submit periodic reports so that the Government can determine the extent of compliance by the offeror with the subcontracting plan;

(iii) Submit Standard Form (SF) 294, Subcontracting Report for Individual Contracts, and/or SF 295, Summary Subcontract Report, in accordance with paragraph (j) of this clause. The reports shall provide information on subcontract awards to small business concerns, veteran-owned small business concerns, service-disabled veteran-owned small business concerns, HUBZone small business concerns, small disadvantaged business concerns, women-owned small business concerns, and Historically Black Colleges and Universities and Minority Institutions. Reporting shall be in accordance with the instructions on the forms or as provided in agency regulations.

(iv) Ensure that its subcontractors agree to submit SF 294 and SF 295.

(11) A description of the types of records that will be maintained concerning procedures that have been adopted to comply with the requirements and goals in the plan, including establishing source lists; and a description of the offeror's efforts to locate small business, veteran-owned small business, service-disabled veteran-owned small business, HUBZone small business, small disadvantaged business, and women-owned small business concerns and award subcontracts to them. The records shall include at least the following (on a plant-wide or company-wide basis, unless otherwise indicated):

(i) Source lists (*e.g.*, PRO-Net), guides, and other data that identify small business, veteran-owned small business, service-disabled veteran-owned small business, HUBZone small business, small disadvantaged business, and women-owned small business concerns.

(ii) Organizations contacted in an attempt to locate sources that are small business, veteran-owned small business, service-disabled veteran-owned small business, HUBZone small business, small disadvantaged business, or women-owned small business concerns.

(iii) Records on each subcontract solicitation resulting in an award of more than $100,000, indicating—

(A) Whether small business concerns were solicited and, if not, why not;

(B) Whether veteran-owned small business concerns were solicited and, if not, why not;

(C) Whether service-disabled veteran-owned small business concerns were solicited and, if not, why not;

(D) Whether HUBZone small business concerns were solicited and, if not, why not;

(E) Whether small disadvantaged business concerns were solicited and, if not, why not;

(F) Whether women-owned small business concerns were solicited and, if not, why not; and

(G) If applicable, the reason award was not made to a small business concern.

(iv) Records of any outreach efforts to contact—

(A) Trade associations;

(B) Business development organizations;

(C) Conferences and trade fairs to locate small, HUBZone small, small

disadvantaged, and women-owned small business sources; and

(D) Veterans service organizations.

(v) Records of internal guidance and encouragement provided to buyers through—

(A) Workshops, seminars, training, etc.; and

(B) Monitoring performance to evaluate compliance with the program's requirements.

(vi) On a contract-by-contract basis, records to support award data submitted by the offeror to the Government, including the name, address, and business size of each subcontractor. Contractors having commercial plans need not comply with this requirement.

(e) In order to effectively implement this plan to the extent consistent with efficient contract performance, the Contractor shall perform the following functions:

(1) Assist small business, veteran-owned small business, service-disabled veteran-owned small business, HUBZone small business, small disadvantaged business, and women-owned small business concerns by arranging solicitations, time for the preparation of bids, quantities, specifications, and delivery schedules so as to facilitate the participation by such concerns. Where the Contractor's lists of potential small business, veteran-owned small business, service-disabled veteran-owned small business, HUBZone small business, small disadvantaged business, and women-owned small business subcontractors are excessively long, reasonable effort shall be made to give all such small business concerns an opportunity to compete over a period of time.

(2) Provide adequate and timely consideration of the potentialities of small business, veteran-owned small business, service-disabled veteran-owned small business, HUBZone small business, small disadvantaged business, and women-owned small business concerns in all "make-or-buy" decisions.

(3) Counsel and discuss subcontracting opportunities with representatives of small business, veteran-owned small business, service-disabled veteran-owned small business , HUBZone small business, small disadvantaged business, and women-owned small business firms.

(4) Provide notice to subcontractors concerning penalties and remedies for misrepresentations of business status as small, veteran-owned small business, HUBZone small, small disadvantaged, or women-owned small business for the purpose of obtaining a subcontract that is to be included as part or all of a goal contained in the Contractor's subcontracting plan.

(f) A master plan on a plant or division-wide basis that contains all the elements required by paragraph (d) of this clause, except goals, may be incorporated by reference as a part of the subcontracting plan required of the offeror by this clause; provided —

(1) The master plan has been approved;

(2) The offeror ensures that the master plan is updated as necessary and provides copies of the approved master plan, including evidence of its approval, to the Contracting Officer; and

(3) Goals and any deviations from the master plan deemed necessary by the Contracting Officer to satisfy the requirements of this contract are set forth in the individual subcontracting plan.

(g) A commercial plan is the preferred type of subcontracting plan for contractors furnishing commercial items. The commercial plan shall relate to the offeror's planned subcontracting generally, for both commercial and Government business, rather than solely to the Government contract. Commercial plans are also preferred for subcontractors that provide commercial items under a prime contract, whether or not the prime contractor is supplying a commercial item.

(h) Prior compliance of the offeror with other such subcontracting plans under previous contracts will be considered by the Contracting Officer in determining the responsibility of the offeror for award of the contract.

(i) The failure of the Contractor or subcontractor to comply in good faith with—

(1) The clause of this contract entitled "Utilization Of Small Business Concerns;" or

(2) An approved plan required by this clause, shall be a material breach of the contract.

(j) The Contractor shall submit the following reports:

(1) *Standard Form 294, Subcontracting Report for Individual Contracts.* This report shall be submitted to the Contracting Officer semiannually and at contract completion. The report covers subcontract award data related to this contract. This report is not required for commercial plans.

(2) *Standard Form 295, Summary Subcontract Report.* This report encompasses all of the contracts with the awarding agency. It must be submitted semi-annually for contracts with the Department of Defense and annually for contracts with civilian agencies. If the reporting activity is covered by a commercial plan, the reporting activity must report annually all subcontract awards under that plan. All reports submitted at the close

of each fiscal year (both individual and commercial plans) shall include a breakout, in the Contractor's format, of subcontract awards, in whole dollars, to small disadvantaged business concerns by North American Industry Classification System (NAICS) Industry Subsector. For a commercial plan, the Contractor may obtain from each of its subcontractors a predominant NAICS Industry Subsector and report all awards to that subcontractor under its predominant NAICS Industry Subsector.
(End of clause)

29. *FAR 52.219-16 LIQUIDATED DAMAGES-SUBCONTRACTING PLAN (JAN 1999)

(a) Failure to make a good faith effort to comply with the subcontracting plan, as used in this clause, means a willful or intentional failure to perform in accordance with the requirements of the subcontracting plan approved under the clause in this contract entitled ``Small Business Subcontracting Plan," or willful or intentional action to frustrate the plan.

(b) Performance shall be measured by applying the percentage goals to the total actual subcontracting dollars or, if a commercial plan is involved, to the pro rata share of actual subcontracting dollars attributable to Government contracts covered by the commercial plan., If, at contract completion, or in the case of a commercial plan, at the close of the fiscal year for which the plan is applicable, the Contractor has failed to meet its subcontracting goals and the Contracting Officer decides in accordance with paragraph (c) of this clause that the Contractor failed to make a good faith effort to comply with its subcontracting plan, established in accordance with the clause in this contract entitled ``Small Business Subcontracting Plan," the Contractor shall pay the Government liquidated damages in an amount stated. The amount of probable damages attributable to the Contractor's failure to comply shall be an amount equal to the actual dollar amount by which the Contractor failed to achieve each subcontract goal.

(c) Before the Contracting Officer makes a final decision that the Contractor has failed to make such good faith effort, the Contracting Officer shall give the Contractor written notice specifying the failure and permitting the Contractor to demonstrate what good faith efforts have been made and to discuss the matter. Failure to respond to the notice may be taken as an admission that no valid explanation exists. If, after consideration of all the pertinent data, the Contracting Officer finds that the Contractor failed to make a good faith effort to comply with the subcontracting plan, the Contracting Officer shall issue a final decision to that effect and require that the Contractor pay the Government liquidated damages as provided in paragraph (b) of this clause.

(d) With respect to commercial plans, the Contracting Officer who approved the plan will perform the functions of the Contracting Officer under this clause on behalf of all agencies with contracts covered by a commercial plan.

(e) The Contractor shall have the right of appeal, under the clause in this contract entitled, Disputes, from many final decision of the Contracting Officer.

(f) Liquidated damages shall be in addition to any other remedies that the Government may have.

30. DFARS 252.219-7003 SMALL, SMALL DISADVANTAGED AND WOMEN-OWNED SMALL BUSINESS SUBCONTRACTING PLAN (DOD CONTRACTS) (APR 1996)

This clause supplements the Federal Acquisition Regulation 52.219-9, Small, Small Disadvantaged and Women-Owned Small Business Subcontracting Plan, clause of this contract.

(a) Definitions.

"Historically black colleges and universities," as used in this clause, means institutions determined by the Secretary of Education to meet the requirements of 34 CFR Section 608.2. The term also means any nonprofit research institution that was an integral part of such a college or university before November 14, 1986.

"Minority institutions," as used in this clause, means institutions meeting the requirements of Section 1046(3) of the Higher Education Act of 1965 (20 U.S.C. 1135d-5(3)). The term also includes Hispanic-serving institutions as defined in Section 316(b)(1) of such Act (20 U.S.C. 1059c(b)(1).

(b) Except for company or division-wide commercial products subcontracting plans, the term "small disadvantaged business," when used in the FAR 52.219-9 clause, includes historically black colleges and universities and minority institutions in addition to small disadvantaged business concerns.

(c) Work under the contract or its subcontracts shall be credited toward meeting the small disadvantaged business concern goal required by paragraph (d) of the FAR 52.219-9 clause when:

(1) It is performed on Indian lands or in joint venture with an Indian tribe or a tribally-owned corporation, and

(2) It meets the requirements of 10 U.S.C. 2323a.

(d) Subcontracts awarded to workshops approved by the Committee for Purchase from People Who are Blind or Severely Disabled (41 U.S.C. 46-48), may be counted toward the Contractor's small business subcontracting goal.

(e) A mentor firm, under the Pilot Mentor-Protege Program established under Section 831 of Pub. L. 101-510, as amended, may count toward its small disadvantaged business goal, subcontracts awarded--

(1) Protege firms which are qualified organizations employing the severely handicapped; and

(2) Former protege firms that meet the criteria in Section 831(g)(4) of Pub. L. 101-510.

(f) The master plan approval referred to in paragraph (f) of the FAR 52.219-9 clause is approval by the Contractor's cognizant contract administration activity.

(g) In those subcontracting plans whihc specifically identify small, small disadvantaged, and women-owned businesses, the Contractor shall notify the Administrative Contracting Officer of any substitutions of firms that are not small, small disadvantaged, or women-owned small businesses for the firms listed in the subcontracting plan. Notifications shall be in writing and shall occur within a reasonable period of time after award of the subcontract. Contractor-specified formats shall be acceptable.

31. DFARS 252.219-7004 SMALL, SMALL DISADVANTAGED AND WOMEN-OWNED SMALL BUSINESS SUBCONTRACTING PLAN (TEST PROGRAM) (JUN 1997)

(a) Definition. "Subcontract," as used in this clause, means any agreement (other than one involving an employer-employee relationship) entered into by a Federal Government prime Contractor or subcontractor calling for supplies or services required for performance of the contract or subcontract.

(b) The Offeror's comprehensive small business subcontracting plan and its successors, which are authorized by and approved under the test program of Section 834 of Pub. L. 101-189, shall be included in and made a part of the resultant contract. Upon expulsion from the test program or expiration of the test program, the Contractor shall negotiate an individual subcontracting plan for all future contracts that meet the requirements of Section 211 of Publ. L. 95-507.

(c) The Contractor shall submit Standard Form 295, Summary Subcontract Report, in accordance with the instructions on the form, except--

(1) One copy of SF 295 and attachments shall be submitted to Director, Small and Disadvantaged Business Utilization, Office of the Deputy Under Secretary of Defense (International and Commercial Programs), 3061 Defense Pentagon, Room 2A338, Washington, DC 20301-3061; and

(2) Item 14, Remarks, shall be completed to include semi-annual cumulative--

(1) Small business, small disadvantaged business and women-owned small business goals; and

(2) Small business and small disadvantaged business goals, actual accomplishments, and percentages for each of the two designated industry categories.

(d) The failure of the Contractor or subcontractor to comply in good faith with (1) the clause of this contract entitled "Utilization of Small, Small Disadvantaged and Women-Owned Small Business Concerns," or (2) an approved plan required by this clause, shall be a material breach of the contract.

32. DFARS 252.219-7009 SECTION 8(a) DIRECT AWARD (MAR 2002)

(a) This contract is issued as a direct award between the contracting office and the 8(a) Contractor pursuant to the Partnership Agreement dated February 1, 2002, between the Small Business Administration (SBA) and the Department of Defense. Accordingly, the SBA, even if not identified in Section A of this contract, is the prime contractor and retains responsibility for 8(a) certification, for 8(a) eligibility determinations and related issues, and for providing counseling and assistance to the 8(a) Contractor under the 8(a) Program. The cognizant SBA district office is:

[To be completed by the Contracting Officer at the time of award]

(b) The contracting office is responsible for administering the contract and for taking any action on behalf of the Government under the terms and conditions of the contract; provided that the contracting office shall give advance notice to the SBA before it issues a final notice terminating performance, either in whole or in part, under the contract. The contracting office also shall coordinate with the SBA prior to processing any novation agreement. The contracting office may assigncontract administration functions to a contract administration office.

(c) The 8(a) Contractor agrees that--

(1) It will notify the Contracting Officer, simultaneous with its notification to the SBA (as required by SBA's 8(a) regulations at 13 CFR 124.308), when the owner or owners upon whom 8(a) eligibility is based plan to relinquish ownership or control of the concern. Consistent with Section 407 of Pub. L. 100-656, transfer of ownership or control shall result in termination of the contract for convenience, unless the SBA waives the requirement for termination prior to the actual relinquishing of ownership and control; and

(2) It will not subcontract the performance of any of the requirements of this contract without the prior written approval of the SBA and the Contracting Officer.

(End of clause)

33. DFARS 252.219-7010 ALTENATE A (JUN 1998)
[When Competitive 8(a) Contracting Procedures are used]

As prescribed in 219.811-3(2), substitute the following paragraph (c) for paragraph (c) of the clause at FAR 52.219-18:

(c) Any award resulting from this solicitation will be made directly by the Contracting Officer to the successful 8(a) offeror selected through the evaluation criteria set forth in this solicitation.

34. *FAR 52.222-1 NOTICE TO THE GOVERNMENT OF LABOR DISPUTES (FEB 1997)

If the Contractor has knowledge that any actual or potential labor dispute is delaying or threatens to delay the timely performance of this contract, the Contractor shall immediately give notice, including all relevant information, to the Contracting Officer. (End of clause)

35. *FAR 52.222-3 CONVICT LABOR (JUNE 2003)

(a) Except as provided in paragraph (b) of this clause, the Contractor shall not employ in the performance of this contract any person undergoing a sentence of imprisonment imposed by any court of a State, the District of Columbia, Puerto Rico, the Northern Mariana Islands, American Samoa, Guam, or the U.S. Virgin Islands.

(b) The Contractor is not prohibited from employing persons—

(1) On parole or probation to work at paid employment during the term of their sentence;

(2) Who have been pardoned or who have served their terms; or

(3) Confined for violation of the laws of any of the States, the District of Columbia, Puerto Rico, the Northern Mariana Islands, American Samoa, Guam, or the U.S. Virgin Islands who are authorized to work at paid employment in the community under the laws of such jurisdiction, if—

(i) The worker is paid or is in an approved work training program on a voluntary basis;

(ii) Representatives of local union central bodies or similar labor union organizations have been consulted;

(iii) Such paid employment will not result in the displacement of employed workers, or be applied in skills, crafts, or trades in which there is a surplus of available gainful labor in the locality, or impair existing contracts for services;

(iv) The rates of pay and other conditions of employment will not be less than those paid or provided for work of a similar nature in the locality in which the work is being performed; and

(v) The Attorney General of the United States has certified that the work-release laws or regulations of the jurisdiction involved are in conformity with the requirements of Executive Order 11755, as amended by Executive Orders 12608 and 12943.

(End of clause)

36. *FAR 52.222-4 CONTRACT WORK HOURS AND SAFETY STANDARDS ACT—OVERTIME COMPENSATION (SEPT 2000)

(a) *Overtime requirements*. No Contractor or subcontractor employing laborers or mechanics (see Federal Acquisition Regulation 22.300) shall require or permit them to work over 40 hours in any workweek unless they are paid at least 1 and 1/2 times the basic rate of pay for each hour worked over 40 hours.

(b) *Violation; liability for unpaid wages; liquidated damages*. The responsible Contractor and subcontractor are liable for unpaid wages if they violate the terms in paragraph (a) of this clause. In addition, the Contractor and subcontractor are liable for liquidated damages payable to the Government. The Contracting Officer will assess liquidated damages at the rate of $10 per affected employee for each calendar day on which the employer required or permitted the employee to work in excess of the standard workweek of 40 hours without paying overtime wages required by the Contract Work Hours and Safety Standards Act.

(c) *Withholding for unpaid wages and liquidated damages*. The Contracting Officer will withhold from payments due under the contract sufficient funds required to satisfy any Contractor or subcontractor liabilities for unpaid wages and liquidated damages. If amounts withheld under the contract are insufficient to satisfy Contractor or subcontractor liabilities, the Contracting Officer will withhold payments from other Federal or Federally assisted contracts held by the same Contractor that are subject to the Contract Work Hours and Safety Standards Act.

(d) *Payrolls and basic records*. (1) The Contractor and its subcontractors shall maintain payrolls and basic payroll records for all laborers and mechanics working on the contract during the contract and shall make them available to the Government until 3 years after contract completion. The records shall contain the name and address of each employee, social security number, labor classifications, hourly rates of wages paid, daily and weekly number of hours worked, deductions made, and actual wages paid. The records need not duplicate those required for construction work by Department of Labor regulations at 29 CFR 5.5(a)(3) implementing the Davis-Bacon Act .

(2) The Contractor and its subcontractors shall allow authorized representatives of the Contracting Officer or the Department of Labor to inspect, copy, or transcribe records maintained under paragraph (d)(1) of this clause. The Contractor or subcontractor also shall allow authorized representatives of the Contracting Officer or Department of Labor to interview employees in the workplace during working hours.

(e) *Subcontracts*. The Contractor shall insert the provisions set forth in paragraphs (a) through (d) of this clause in subcontracts exceeding $100,000 and require subcontractors to include these provisions in any lower-tier subcontracts. The Contractor shall be responsible for compliance by any subcontractor or lower-tier subcontractor with the provisions set forth in paragraphs (a) through (d) of this clause.

(End of clause)

37. *FAR 52.222-6 DAVIS-BACON ACT (FEB 1995)

(a) All laborers and mechanics employed or working upon the site of the work will be paid unconditionally and not less often than once a week, and without subsequent deduction or rebate on any account (except such payroll deductions as are permitted by regulations issued by the Secretary of Labor under the Copeland Act (29 CFR Part 3)), the full amount of wages and bona fide fringe benefits (or cash equivalents thereof) due at time of payment computed at rates not less than those contained in the wage determination of the Secretary of Labor which is attached hereto and made a part hereof, regardless of any contractual relationship which may be alleged to exist between the Contractor and such laborers and mechanics. Contributions made or costs reasonably anticipated for bona fide fringe benefits under section 1(b)(2) of the Davis-Bacon Act on behalf of laborers or mechanics are considered wages paid to such laborers or mechanics, subject to the provisions of paragraph (d) of this clause; also, regular contributions made or costs incurred for more than a weekly period (but not less often than quarterly) under plans, funds, or programs which cover the particular weekly period, are deemed to be constructively made or incurred during such period. Such laborers and mechanics shall be paid not less than the appropriate wage rate and fringe benefits in the wage determination for the classification of work actually performed, without regard to skill, except as provided in the clause entitled Apprentices and Trainees. Laborers or mechanics performing work in more than one classification may be compensated at the rate specified for each classification for the time actually worked therein; provided, that the employer's payroll records accurately set forth the time spent in each classification in which work is performed. The wage determination (including any additional classifications and wage rates conformed under paragraph (b) of this clause) and the Davis-Bacon poster (WH-1321) shall be posted at all times by the Contractor and its subcontractors at the site of the work in a prominent and accessible place where it can be easily seen by the workers.

(b) (1) The Contracting Officer shall require that any class of laborers or mechanics, which is not listed in the wage determination and which is to be employed under the contract shall be classified in conformance with the wage determination. The Contracting Officer shall approve an additional classification and wage rate and fringe benefits therefor only when all the following criteria have been met:

(i) Tthe work to be performed by the classification requested is not performed by a classification in the wage determination.

(ii) The classification is utilized in the area by the construction industry.

(iii) The proposed wage rate, including any bona fide fringe benefits, bears a reasonable relationship to the wage rates contained in the wage determination.

(2) If the Contractor and laborers and mechanics to be employed in the classification (if known), or their representatives, and the Contracting Officer agree on the classification and wage rate (including the amount designated for fringe benefits, where appropriate), a report of the action taken shall be sent by the Contracting Officer to the Administrator of the Wage and Hour Division, Employment Standards Administration, U.S. Department of Labor, Washington, DC 20210. The Administrator or an authorized representative will approve, modify, or disapprove every additional classification action within 30 days of receipt and so advise the Contracting Officer or will notify the Contracting Officer within the 30-day period that additional time is necessary.

(3) In the event the Contractor, the laborers or mechanics to be employed in the classification, or their representatives, and the Contracting Officer do not agree on the proposed classification and wage rate (including the amount designated for fringe benefits, where appropriate), the Contracting Officer shall refer the questions, including the views of all interested parties and the recommendation of the Contracting Officer, to the Administrator of the Wage and Hour Division for determination. The Administrator, or an authorized representative, will issue a determination within 30 days of receipt and so advise the Contracting Officer or will notify the Contracting Officer within the 30-day period that additional time is necessary.

(4) The wage rate (including fringe benefits, where appropriate) determined pursuant to subparagraphs (b)(2) and (b)(3) of this clause shall be paid to all workers performing work in the classification under this contract from the first day on which work is performed in the classification.

(c) Whenever the minimum wage rate prescribed in the contract for a class of laborers or mechanics includes a fringe benefit which is not expressed as an hourly rate, the Contractor shall either pay the benefit as stated in the wage determination or shall pay another bona fide fringe benefit or an hourly cash equivalent thereof.

(d) If the Contractor does not make payments to a trustee or other third person, the Contractor may consider as part of the wages of any laborer or mechanic the amount of any costs reasonably anticipated in providing bona fide fringe benefits under a plan or program; provided, that the Secretary of Labor has found, upon the written request of the Contractor, that the applicable standards of the Davis-Bacon Act have been met. The Secretary of Labor may require the Contractor to set aside in a separate account assets for the meeting of obligations under the plan or program.

38. *FAR 52.222-7 WITHHOLDING OF FUNDS (FEB 1988)

The Contracting Officer shall, upon his or her own action or upon written request of an authorized representative of the Department of Labor, withhold or cause to be withheld from the Contractor under this contract or any other Federal contract with the same Prime Contractor, or any other Federally assisted contract subject to Davis-Bacon prevailing wage requirements, which is held by the same Prime Contractor, so much of the accrued payments or advances as may be considered necessary to pay laborers and mechanics, including apprentices, trainees, and helpers, employed by the Contractor or any subcontractor the full amount of wages required by the contract. In the event of failure to pay any laborer or mechanic, including any apprentice, trainee, or helper, employed or working on the site of the work, all or part of the wages required by the contract, the Contracting Officer may, after written notice to the Contractor, take such action as may be necessary to cause the suspension of any further payment, advance, or guarantee of funds until such violations have ceased.

39. *FAR 52.222-8 PAYROLLS AND BASIC RECORDS (FEB 1988)

(a) Payrolls and basic records relating thereto shall be maintained by the Contractor during the course of the work and preserved for a period of 3 years thereafter for all laborers and mechanics working at the site of the work. Such records shall contain the name, address, and social security number of each such worker, his or her correct classification, hourly rates of wages paid (including rates of contributions or costs anticipated for bona fide fringe benefits or cash equivalents thereof of the types described in section 1(b)(2)(B) of the Davis-Bacon Act), daily and weekly number of hours worked, deductions made, and actual wages paid. Whenever the Secretary of Labor has found, under paragraph (d) of the clause entitled Davis-Bacon Act, that the wages of any laborer or mechanic include the amount of any costs reasonably anticipated in providing benefits under a plan or program described in section 1(b)(2)(B) of the Davis-Bacon Act, the Contractor shall maintain records which show that the commitment to provide such benefits is enforceable, that the plan or program is financially responsible, and that the plan or program has been communicated in writing to the laborers or mechanics affected and records which show the costs anticipated or the actual cost incurred in providing such benefits. Contractors employing apprentices or trainees under approved programs shall maintain written evidence of the registration of apprenticeship programs and certification of trainee programs, the registration of apprentices and trainees, and the ratios and wage rates prescribed in the applicable programs.

(b) (1) The Contractor shall submit weekly for each week in which any contract work is performed a coy of all payrolls to the Contracting Officer. The payrolls submitted shall set out accurately and completely all of the information required to be maintained under paragraph (a) of this clause. This information may be submitted in any form desired. Optional Form WH-347 (Federal Stock Number 029-005-00014-1) is available for this purpose and may be purchased from the Superintendent of Documents, U.S. Government Printing Office, Washington, DC 20402. The Prime Contractor is responsible for the submission of copies of payrolls by all subcontractors.

(2) Each payroll submitted shall be accompanied by a "Statement of Compliance," signed by the Contractor or subcontractor or his or her agent who pays or supervises the payment of the persons employed under the contract and shall certify--

(i) That the payroll for the payroll period contains the information required to be maintained under paragraph (a) of this clause and that such information is correct and complete;

(ii) That each laborer or mechanic (including each helper, apprentice, and trainee) employed on the contract during the payroll period has been paid the full weekly wages earned, without rebate, either directly or indirectly, and that no deductions have been made either directly or indirectly, and that no deductions have been made either directly or indirectly from the full wages earned, other than permissible deductions as set forth in the Regulations, 29 CFR Part 3; and

(iii) That each laborer or mechanic has been paid not less than the applicable wage rates and fringe benefits or cash equivalents for the classification of work performed, as specified in the applicable wage determination incorporated into the contract.

(3) The weekly submission of a properly executed certification set forth on the reverse side of Optional Form WH-347 shall satisfy the requirement for submission of the "Statement of Compliance" required by subparagraph (b)(2) of this clause.

(4) The falsification of any of the certifications in this clause may subject the Contractor or subcontractor to civil or criminal prosecution under Section 1001 of Title 18 and Section 3729 of Title 31 of the United States Code.

(c) The Contractor or subcontractor shall make the records required under paragraph (a) of this clause available for inspection, copying, or transcription by the Contracting Officer or authorized representatives of the Contracting Officer or the Department of Labor. The Contractor of subcontractor shall permit the Contracting Officer or representatives of the Contracting Officer or the Department of Labor to interview employees during working hours on the job. If the Contractor or subcontractor fails to submit required records or to make them available, the Contracting Officer may, after written notice to the Contractor, take such action as may be necessary to cause the suspension of any further payment. Furthermore, failure to submit the required records upon request or to make such records available may be grounds for debarment action pursuant to 29 CFR 5.12.

40. *FAR 52.222-9 APPRENTICES AND TRAINEES (FEB 1988)

(a) Apprentices. Apprentices will be permitted to work at less than the predetermined rate for the work they performed when they are employed pursuant to and individually registered in a bona fide apprenticeship program registered with the U.S. Department of Labor, Employment and Training Administration, Bureau of Apprenticeship and Training, or with a State Apprenticeship Agency recognized by the Bureau, or if a person is employed in his or her first 90 days of probationary employment as an apprentice in such an apprenticeship program, who is not individually registered in the program, but who has been certified by the Bureau of Apprenticeship and Training or a State Apprenticeship Agency (where appropriate) to be eligible for probationary employment as an apprentice. The allowable ratio of apprentices to journeymen on the job site in any craft classification shall not be greater than the ratio permitted to the Contractor as to the entire work force under the registered program. Any worker listed on a payroll at an apprentice wage rate, who is not registered or otherwise employed as stated in this paragraph, shall be paid not less than the applicable wage determination for the classification of work actually performed. In addition, any apprentice performing work on the job site in excess of the ratio permitted under the registered program shall be paid not less than the applicable wage rate on the wage determination for the work actually performed. Where a Contractor is performing construction on a project in a locality other than that in which its program is registered, the ratios and wage rates (expressed in percentages of the journeyman's hourly rate) specified in the Contractor's or subcontractor's registered program shall be observed. Every apprentice must be paid at not less than the rate specified in the registered program for the apprentice's level of progress, expressed as a percentage of the journeyman hourly rate specified in the applicable wage determination. Apprentices shall be paid fringe benefits in accordance with the provisions of the apprenticeship program. If the apprenticeship program does not specify fringe benefits, apprentices must be paid the full amount of fringe benefits listed on the wage determination for the applicable classification. If the Administrator determines that a different practice prevails for the applicable apprentice classification, fringes shall be paid in accordance with that determination. In the event the Bureau of Apprenticeship and Training, or a State Apprenticeship Agency recognized by the Bureau, withdraws approval of an apprenticeship program, the Contractor will not longer be permitted to utilize apprentices at less than the applicable predetermined rate for the work performed until an acceptable program is approved.

(b) Trainees. Except as provided in 29 CFR 5.16, trainees will not be permitted to work at less than the predetermined rate for the work performed unless they are employed pursuant to and individually registered in a program which has received prior approval, evidenced by formal certification by the U.S. Department of Labor, Employment and Training Administration. The ratio of trainees to journeymen on the job site shall not be greater than permitted under the plan approved by the Employment and Training Administration. Every trainee must be paid at not less than the rate specified in the approved program for the trainee's level of progress, expressed as a percentage of the journeyman hourly rate specified in the applicable wage determination. Trainees shall be paid fringe benefits in accordance with the provisions of the trainee program. If the trainee program does not mention fringe benefits, trainees shall be paid the full amount of fringe benefits listed in the wage determination unless the Administrator of the Wage and Hour Division determines that there is an apprenticeship program associated with the corresponding journeyman wage rate in the wage determination which provides for less than full fringe benefits for apprentices. Any employee listed on the payroll at a trainee rate who is not registered and participating in a training plan approved by the Employment and Training Administration shall be paid not less than the applicable wage rate

in the wage determination for the classification of work actually performed. In addition, any trainee performing work on the job site in excess of the ratio permitted under the registered program shall be paid not less than the applicable wage rate in the wage determination for the work actually performed. In the event the Employment and Training Administration withdraws approval of a training program, the Contractor will no longer be permitted to utilize trainees at less than the applicable predetermined rate for the work performed until an acceptable program is approved.

(c) Equal employment opportunity. The utilization of apprentices, trainees, and journeymen under this clause shall be inconformity with the equal employment opportunity requirements of Executive Order 11246, as amended, and 29 CFR Part 30.

41. *FAR 52.222-10 COMPLIANCE WITH COPELAND ACT REQUIREMENTS (FEB 1988)

The Contractor shall comply with the requirements of 29 CFR Part 3, which are hereby incorporated by reference in this contract.

42. *FAR 52.222-11 SUBCONTRACTS (LABOR STANDARDS) (FEB 1988)

(a) The Contractor or subcontractor shall insert in any subcontracts the clauses entitled Davis-Bacon Act, Contract Work Hours and Safety Standards Act--Overtime Compensation, Apprentices and Trainees, Payrolls and Basic Records, Compliance with Copeland Act Requirements, Withholding of Funds, Subcontracts (Labor Standards), Contract Termination--Debarment, Disputes Concerning Labor Standards, Compliance with Davis-Bacon and Related Act Regulations ,and Certification of Eligibility, and such other clauses as the Contracting Officer may, by appropriate instructions, require, and also a clause requiring subcontractors to include these clauses in any lower tier subcontracts. The Prime Contractor shall be responsible for compliance by any subcontractor or lower tier subcontractor with all the contract clauses cited in this paragraph.

(b) (1) Within 14 days after award of the contract, the Contractor shall deliver to the Contracting Officer a completed Statement and Acknowledgment Form (SF 1413) for each subcontract, including the subcontractor's signed and dated acknowledgment that the clauses set forth in paragraph (a) of this clause have been included in the subcontract.

(2) Within 14 days after the award of any subsequently awarded subcontract the Contractor shall deliver to the Contracting Officer an updated completed SF 1413 for such additional subcontract.

43. *FAR 52.222-12 CONTRACT TERMINATION--DEBARMENT (FEB 1988)

A breach of the contract clauses entitled Davis-Bacon Act, Contract Work Hours and Safety Standards Act--Overtime Compensation, Apprentices and Trainees, Payrolls and Basic Records, Compliance with Copeland Act Requirements, Subcontracts (Labor Standards), Compliance with Davis-Bacon and Related Act Regulations, or Certification of Eligibility may be grounds for termination of the contract, and for debarment as a Contractor and subcontractor as provided in 29 CFR 5.12.

44. *FAR 52.222-13 COMPLIANCE WITH DAVIS-BACON AND RELATED ACT REGULATIONS (FEB 1988)

All rulings and interpretations of the Davis-Bacon and Related Acts contained in 29 CFR Parts 1, 3, and 5 are hereby incorporated by reference in this contract.

45. *FAR 52.222-14 DISPUTES CONCERNING LABOR STANDARDS (FEB 1988)

The United States Department of Labor has set forth in 29 CFR Parts 5, 6, and 7 procedures for resolving disputes concerning labor standards requirements. Such disputes shall be resolved in accordance with those procedures and not the Disputes clause of this contract. Disputes within the meaning of this clause include disputes between the Contractor (or any of its subcontractors) and the contracting agency the U.S. Department of Labor, or the employees of their representatives.

46. *FAR 52.222-15 CERTIFICATION OF ELIGIBILITY (FEB 1988)

(a) By entering into this contract, the Contractor certifies that neither it (nor he or she) nor any person or firm who has an interest in the Contractor's firm is a person or firm ineligible to be awarded Government contracts by virtue of section 3(a) of the Davis-Bacon Act or 29 CFR 5.12(a)(1).

(b) No part of this contract shall be subcontracted to any person or firm ineligible for award of a Government contract by virtue of section 3(a) of the Davis-Bacon Act or 29 CFR 5.12(a)(1).

(c) The penalty for making false statements is prescribed in the U.S. Criminal Code, 18 U.S.C. 1001.

47. *FAR 52.222-26 EQUAL OPPORTUNITY (APR 2002)

(a) *Definition*. "United States," as used in this clause, means the 50 States, the District of Columbia, Puerto Rico, the Northern Mariana Islands, American Samoa, Guam, the U.S. Virgin Islands, and Wake Island.

(b) If, during any 12-month period (including the 12 months preceding the award of this contract), the Contractor has been or is awarded nonexempt Federal contracts and/or subcontracts that have an aggregate value in excess of $10,000, the Contractor shall comply with paragraphs (b)(1) through (b)(11) of this clause, except for work performed outside the United States by employees who were not recruited within the United States. Upon request, the Contractor shall provide information necessary to determine the applicability of this clause.

(1) The Contractor shall not discriminate against any employee or applicant for employment because of race, color, religion, sex, or national origin. However, it shall not be a violation of this clause for the Contractor to extend a publicly announced preference in employment to Indians living on or near an Indian reservation, in connection with employment opportunities on or near an Indian reservation, as permitted by 41 CFR 60-1.5.

(2) The Contractor shall take affirmative action to ensure that applicants are employed, and that employees are treated during employment, without regard to their race, color, religion, sex, or national origin. This shall include, but not be limited to—

(i) Employment;
(ii) Upgrading;
(iii) Demotion;
(iv) Transfer;
(v) Recruitment or recruitment advertising;
(vi) Layoff or termination;
(vii) Rates of pay or other forms of compensation; and
(viii) Selection for training, including apprenticeship.

(3) The Contractor shall post in conspicuous places available to employees and applicants for employment the notices to be provided by the Contracting Officer that explain this clause.

(4) The Contractor shall, in all solicitations or advertisements for employees placed by or on behalf of the Contractor, state that all qualified applicants will receive consideration for employment without regard to race, color, religion, sex, or national origin.

(5) The Contractor shall send, to each labor union or representative of workers with which it has a collective bargaining agreement or other contract or understanding, the notice to be provided by the Contracting Officer advising the labor union or workers' representative of the Contractor's commitments under this clause, and post copies of the notice in conspicuous places available to employees and applicants for employment.

(6) The Contractor shall comply with Executive Order 11246, as amended, and the rules, regulations, and orders of the Secretary of Labor.

(7) The Contractor shall furnish to the contracting agency all information required by Executive Order 11246, as amended, and by the rules, regulations, and orders of the Secretary of Labor. The Contractor shall also file Standard Form 100 (EEO-1), or any successor form, as prescribed in 41 CFR part 60-1. Unless the Contractor has filed within the 12 months preceding the date of contract award, the Contractor shall, within 30 days after contract award, apply to either the regional Office of Federal Contract Compliance Programs (OFCCP) or the local office of the Equal Employment Opportunity Commission for the necessary forms.

(8) The Contractor shall permit access to its premises, during normal business hours, by the contracting agency or the OFCCP for the purpose of conducting on-site compliance evaluations and complaint investigations. The Contractor shall permit the Government to inspect and copy any books, accounts, records (including computerized records), and other material that may be relevant to the matter under investigation and pertinent to compliance with Executive Order 11246, as amended, and rules and regulations that implement the Executive Order.

(9) If the OFCCP determines that the Contractor is not in compliance with this clause or any rule, regulation, or order of the Secretary of Labor, this contract may be canceled, terminated, or suspended in whole or in part and the Contractor may be declared ineligible for further Government contracts, under the procedures authorized in Executive Order 11246, as amended. In addition, sanctions may be imposed and remedies invoked against the Contractor as provided in Executive Order 11246, as amended; in the rules, regulations, and orders of the Secretary of Labor; or as otherwise provided by law.

(10) The Contractor shall include the terms and conditions of paragraphs (b)(1) through (11) of this clause in every subcontract or purchase order that is not exempted by the rules, regulations, or orders of the Secretary of Labor issued under Executive Order 11246, as amended, so that these terms and conditions will be binding upon each subcontractor or vendor.

(11) The Contractor shall take such action with respect to any subcontract or purchase order as the Contracting Officer may direct as a means of enforcing these terms and conditions, including sanctions for noncompliance, provided, that if the Contractor becomes involved in, or is threatened with, litigation with a subcontractor or vendor as a result of any direction, the Contractor may request the United States to enter into the litigation to protect the interests of the United States.

(c) Notwithstanding any other clause in this contract, disputes relative to this clause will be governed by the procedures in 41 CFR 60-1.1.

(End of clause)

48. *FAR 52.222-27 AFFIRMATIVE ACTION COMPLIANCE REQUIREMENTS FOR CONSTRUCTION (FEB 1999)

(a) Definitions.

"Covered area," as used in this clause, means the geographical area described in the solicitation for this contract.

“Deputy Assistant Secretary,” as used in this clause, means the Deputy Assistant Secretary for Federal Contract Compliance, U.S. Department of Labor, or a designee

"Employer's identification number," as used in this clause, means the Federal Social Security number used on the employer's quarterly Federal tax return, U.S. Treasury Department Form 941.

"Minority," as used in this clause, means--

(1) American Indian or Alaskan Native (all persons having origins in any of the original peoples of North America and maintaining identifiable tribal affiliations through membership and participation or community identification).

(2) Asian and Pacific Islander (all persons having origins in any of the original peoples of the Far East, Southeast Asia, the Indian Subcontinent, or the Pacific Islands);

(3) Black (all persons having origins in any of the black African racial groups not of Hispanic origin); and

(4) Hispanic (all persons of Mexican, Puerto Rican, Cuban, Central or South American, or other Spanish culture or origin, regardless of race).

(b) If the Contractor, or a subcontractor at any tier, subcontracts a portion of the work involving any construction trade each such subcontract in excess of $10,000 shall include this clause and the Notice containing the goals for minority and female participation stated in the solicitation for this contract.

(c) If the Contractor is participating in a Hometown Plan (41 CFR 60-4) approved by the U.S. Department of Labor in a covered area, either individually or through an association, its affirmative actin obligations on all work in the plan area (including goals) shall comply with the plan for those trades that have unions participating in the plan. Contractors must be able to demonstrate participation in, and compliance with, the provisions of the plan. Each Contractor or subcontractor participating in an approved plan is also required to comply with its obligations under the Equal Opportunity clause, and to make a good faith effort to achieve each goal under the plan in each trade in which it has employees. The overall good-faith performance by other Contractors or subcontractors toward a goal in an approved plan does not excuse any Contractor's or subcontractor's failure to make good-faith efforts to achieve the plan's goals.

(d) The Contractor shall implement the affirmative action procedures in subparagraphs (g)(1) through (16) of this clause. The goals stated in the solicitation for this contract are expressed as percentages of the total hours of employment and training of minority and female utilization that the Contractor should reasonably be able to achieve in each construction trade in which it has employees in the covered area. If the Contractor performs construction work in a geographical area located outside of the covered area, it shall apply the goals established for the geographical area where that work is actually performed. The Contractor is expected to make substantially uniform progress toward its goals in each craft.

(e) Neither the terms and conditions of any collective bargaining agreement, nor the failure by a union with which the Contractor has a collective bargaining agreement, to refer minorities or women shall excuse the Contractor's obligations under this clause, Executive Order 11246, as amended, or the regulations thereunder.

(f) In order for the nonworking training hours of apprentices and trainees to be counted in meeting the goals, apprentices and trainees must be employed by the Contractor during the training period, and the Contractor must have made a commitment to employ the apprentices and trainees at the completion of their training, subject to the availability of employment opportunities. Trainees must be trained pursuant to training programs approved by the U.S. Department of Labor.

(g) The Contractor shall take affirmative action to ensure equal employment opportunity. The evaluation of the Contractor's compliance with this clause shall be based upon its effort to achieve maximum results from its actions. The Contractor shall document these efforts fully and implement affirmative action steps at least as extensive as the following:

(1) Ensure a working environment free of harassment, intimidation, and coercion at all sites and in all facilities where the Contractor's employees are assigned to work. The Contractor, if possible, will assign two or more women to each construction project. The Contractor shall ensure that foremen, superintendents, and other onsite supervisory personnel are aware of and carry out the Contractor's obligation to maintain such a working environment, with specific attention to minority or female individuals working at these sites or facilities.

(2) Establish and maintain a current list of sources for minority and female recruitment. Provide written notification to minority and female recruitment sources and community organizations when the Contractor or its unions have employment opportunities available, and maintain a record of the organizations' responses.

(3) Establish and maintain a current file of the names, addresses, and telephone numbers of each minority and female off-the-street applicant, referrals of minorities or females from unions, recruitment sources, or community organizations, and the action taken with respect to each individual. If an individual was sent to the union hiring hall for referral and not referred back to the Contractor by the union or, if referred back, not employed by the Contractor, this shall be documented in the file, along with whatever additional actions the Contractor may have taken.

(4) Immediately notify the Deputy Assistant Secretary when the union or unions with which the Contractor has a collective bargaining agreement has not referred back to the Contractor a minority or woman sent by the Contractor, or when the Contractor has other information that the union referral process has impeded the Contractor's efforts to meet its obligations.

(5) Develop on-the-job training opportunities and/or participate in training programs for the area that expressly include minorities and women, including upgrading programs and apprenticeship and trainee programs relevant to the Contractor's employment needs, especially those programs funded or approved by the

Department of Labor. The Contractor shall provide notice of these programs to the sources compiled under subparagraph (g)(2) of this clause.

(6) Disseminate the Contractor's equal employment policy by--

(i) Providing notice of the policy to unions and to training, recruitment, and outreach programs, and requesting their cooperation in assisting the Contractor in meeting its contract obligations;

(ii) Including the policy in any policy manual and in collective bargaining agreements;

(iii) Publicizing the policy in the company newspaper, annual report, etc.;

(iv) Reviewing the policy with all management personnel and with all minority and female employees at least once a year; and

(v) Posting the policy on bulletin boards accessible to employees at each location where construction work is performed.

(7) Review, at least annually, the Contractor's equal employment policy and affirmative action obligations with all employees having responsibility for hiring, assignment, layoff, termination, or other employment decisions. Conduct review of this policy with all on-site supervisory personnel before initiating construction work at a job site. A written record shall be made and maintained identifying the time and place of these meetings, persons attending, subject matter discussed, and disposition of the subject matter.

(8) Disseminate the Contractor's equal employment policy externally by including it in any advertising in the news media, specifically including minority and female news media. Provide written notification to, and discuss this policy with, other Contractors and subcontractors with which the Contractor does or anticipates doing business.

(9) Direct recruitment efforts, both oral and written, to minority, female, and community organizations, to schools with minority and female students, and to minority and female recruitment and training organizations serving the Contractor's recruitment area and employment needs. Not later than 1 month before the date for acceptance of applications for apprenticeship or training by any recruitment source, send written notification to organizations such as the above, describing the openings, screening procedures, and tests to be used in the selection process.

(10) Encourage present minority and female employees to recruit minority persons and women. Where reasonable, provide after-school, summer, and vacation employment to minority and female youth both on the site and in other areas of the Contractor's workforce.

(11) Validate all tests and other selection requirements where required under 41 CFR 60-3.

(12) Conduct, at least annually, an inventory and evaluation at least of all minority and female personnel for promotional opportunities. Encourage these employees to seek or to prepare for, through appropriate training, etc., opportunities for promotion.

(13) Ensure that seniority practices job classifications, work assignments, and other personnel practices do not have a discriminatory effect by continually monitoring all personnel and employment-related activities to ensure that the Contractor's obligations under this contract are being carried out.

(14) Ensure that all facilities and company activities are nonsegregated except that separate or single-user toilet and necessary changing facilities shall be provided to assure privacy between the sexes.

(15) Maintain a record of solicitations for subcontracts for minority and female construction contractors and suppliers, including circulation of solicitations to minority and female contractor associations and other business associations.

(16) Conduct a review, at lest annually, of all supervisors' adherence to and performance under the Contractor's equal employment policy and affirmative action obligations.

(h) The Contractor is encouraged to participate in voluntary associations that may assist in fulfilling one or more of the affirmative action obligations contained in subparagraphs (g)(1) through (16) of this clause. The efforts of a contractor association, joint contractor-union, contractor-community, or similar group of which the contractor is a member and participant may be asserted as fulfilling one or more of its obligations under subparagraphs (g)(1) through (16) of this clause, provided the Contractor--

(1) Actively participates in the group;

(2) Makes every effort to ensure that the group has a positive impact on the employment of minorities and women in the industry;

(3) Ensures that concrete benefits of the program are reflected in the Contractor's minority and female workforce participation;

(4) Makes a good-faith effort to meet its individual goals and timetables; and

(5) Can provide access to documentation that demonstrates the effectiveness of actions taken on behalf of the Contractor. The obligation to comply is the Contractor's, and failure of such a group to fulfill an obligation shall not be a defense for the Contractor's noncompliance.

(i) A single goal for minorities and a separate single goal for women shall be established. The Contractor is required to provide equal employment opportunity and to take affirmative action for all minority groups, both male and female, and all women, both minority and nonminority. Consequently, the Contractor may be in violation of Executive Order 11246, as amended, if a particular group is employed in a substantially disparate manner.

(j) The Contractor shall not use goals or affirmative action standards to discriminate against any person because of race, color, religion, sex, or national origin.

(k) The Contractor shall not enter into any subcontract with any person or firm debarred from Government contracts under Executive Order 11246, as amended.

(l) The Contractor shall carry out such sanctions and penalties for violation of this clause and of the Equal Opportunity clause, including suspension, termination, and cancellation of existing subcontracts, as may be imposed or ordered under Executive Order 11246, as amended, and its implementing regulations, by the OFCCP. Any failure to carry out these sanctions and penalties as ordered shall be a violation of this clause and Executive Order 11246, as amended.

(m) The Contractor in fulfilling its obligations under this clause shall implement affirmative action procedures at least as extensive as those prescribed in paragraph (g) of this clause, so as to achieve maximum results from its efforts to ensure equal employment opportunity. If the Contractor fails to comply with the requirements of Executive Order 11246, as amended, the implementing regulations, or this clause, the Deputy Assistant Secretary shall take action as prescribed in 41 CFR 60-4.8.

(n) The Contractor shall designate a responsible official to--

(1) Monitor all employment-related activity to ensure that the Contractor's equal employment policy is being carried out;

(2) Submit reports as may be required by the Government; and

(3) Keep records that shall at least include for each employee the name, address, telephone number, construction trade, union affiliation (if any), employee identification number, social security number, race, sex, status (e.g., mechanic, apprentice, trainee, helper, or laborer), dates of changes in status, hours worked per week in the indicated trade, rate of pay, and locations at which the work was performed. Records shall be maintained in an easily understandable and retrievable form; however, to the degree that existing records satisfy this requirement, separate records are not required to be maintained.

(o) Nothing contained herein shall be construed as a limitation upon the application of other laws that establish different standards of compliance or upon the requirements for the hiring of local or other area residents (e.g., those under the Public Works Employment Act of 1977 and the Community Development Block Grant Program).

49. *FAR 52.222-35 EQUAL OPPORTUNITY FOR SPECIAL DISABLED VETERANS, VETERANS OF THE VIETNAM ERA, AND OTHER ELIGIBLE VETERANS (DEC 2001)

(a) *Definitions*. As used in this clause—

"All employment openings" means all positions except executive and top management, those positions that will be filled from within the Contractor's organization, and positions lasting 3 days or less. This term includes full-time employment, temporary employment of more than 3 days duration, and part-time employment.

"Executive and top management" means any employee—

(1) Whose primary duty consists of the management of the enterprise in which the individual is employed or of a customarily recognized department or subdivision thereof;

(2) Who customarily and regularly directs the work of two or more other employees;

(3) Who has the authority to hire or fire other employees or whose suggestions and recommendations as to the hiring or firing and as to the advancement and promotion or any other change of status of other employees will be given particular weight;

(4) Who customarily and regularly exercises discretionary powers; and

(5) Who does not devote more than 20 percent or, in the case of an employee of a retail or service establishment, who does not devote more than 40 percent of total hours of work in the work week to activities that are not directly and closely related to the performance of the work described in paragraphs (1) through (4) of this definition. This paragraph (5) does not apply in the case of an employee who is in sole charge of an establishment or a physically separated branch establishment, or who owns at least a 20 percent interest in the enterprise in which the individual is employed.

"Other eligible veteran" means any other veteran who served on active duty during a war or in a campaign or expedition for which a campaign badge has been authorized.

"Positions that will be filled from within the Contractor's organization" means employment openings for which the Contractor will give no consideration to persons outside the Contractor's organization (including any affiliates, subsidiaries, and parent companies) and includes any openings the Contractor proposes to fill from regularly established "recall" lists. The exception does not apply to a particular opening once an employer decides to consider applicants outside of its organization.

"Qualified special disabled veteran" means a special disabled veteran who satisfies the requisite skill, experience, education, and other job-related requirements of the employment position such veteran holds or desires, and who, with or without reasonable accommodation, can perform the essential functions of such position.

"Special disabled veteran" means—

(1) A veteran who is entitled to compensation (or who but for the receipt of military retired pay would be entitled to compensation) under laws administered by the Department of Veterans Affairs for a disability—

(i) Rated at 30 percent or more; or

(ii) Rated at 10 or 20 percent in the case of a veteran who has been determined under 38 U.S.C. 3106 to have a serious employment handicap (*i.e*., a significant impairment of the veteran's ability to prepare for, obtain, or retain employment consistent with the veteran's abilities, aptitudes, and interests); or

(2) A person who was discharged or released from active duty because of a service-connected disability.

"Veteran of the Vietnam era" means a person who—

(1) Served on active duty for a period of more than 180 days and was discharged or released from active duty with other than a dishonorable discharge, if any part of such active duty occurred—

(i) In the Republic of Vietnam between February 28, 1961, and May 7, 1975; or

(ii) Between August 5, 1964, and May 7, 1975, in all other cases; or

(2) Was discharged or released from active duty for a service-connected disability if any part of the active duty was performed—

(i) In the Republic of Vietnam between February 28, 1961, and May 7, 1975; or

(ii) Between August 5, 1964, and May 7, 1975, in all other cases.

(b) *General*. (1) The Contractor shall not discriminate against the individual because the individual is a special disabled veteran, a veteran of the Vietnam era, or other eligible veteran, regarding any position for which the employee or applicant for employment is qualified. The Contractor shall take affirmative action to employ, advance in employment, and otherwise treat qualified special disabled veterans, veterans of the Vietnam era, and other eligible veterans without discrimination based upon their disability or veterans' status in all employment practices such as—

(i) Recruitment, advertising, and job application procedures;

(ii) Hiring, upgrading, promotion, award of tenure, demotion, transfer, layoff, termination, right of return from layoff and rehiring;

(iii) Rate of pay or any other form of compensation and changes in compensation;

(iv) Job assignments, job classifications, organizational structures, position descriptions, lines of progression, and seniority lists;

(v) Leaves of absence, sick leave, or any other leave;

(vi) Fringe benefits available by virtue of employment, whether or not administered by the Contractor;

(vii) Selection and financial support for training, including apprenticeship, and on-the-job training under 38 U.S.C. 3687, professional meetings, conferences, and other related activities, and selection for leaves of absence to pursue training;

(viii) Activities sponsored by the Contractor including social or recreational programs;

and

(ix) Any other term, condition, or privilege of employment.

(2) The Contractor shall comply with the rules, regulations, and relevant orders of the Secretary of Labor issued under the Vietnam Era Veterans' Readjustment Assistance Act of 1972 (the Act), as amended (38 U.S.C. 4211 and 4212).

(c) *Listing openings*. (1) The Contractor shall immediately list all employment openings that exist at the time of the execution of this contract and those which occur during the performance of this contract, including those not generated by this contract, and including those occurring at an establishment of the Contractor other than the one where the contract is being performed, but excluding those of independently operated corporate affiliates, at an appropriate local public employment service office of the State wherein the opening occurs. Listing employment openings with the U.S. Department of Labor's America's Job Bank shall satisfy the requirement to list jobs with the local employment service office.

(2) The Contractor shall make the listing of employment openings with the local employment service office at least concurrently with using any other recruitment source or effort and shall involve the normal obligations of placing a bona fide job order, including accepting referrals of veterans and nonveterans. This listing of employment openings does not require hiring any particular job applicant or hiring from any particular group of job applicants and is not intended to relieve the Contractor from any requirements of Executive orders or regulations concerning nondiscrimination in employment.

(3) Whenever the Contractor becomes contractually bound to the listing terms of this clause, it shall advise the State public employment agency in each State where it has establishments of the name and location of each hiring location in the State. As long as the Contractor is contractually bound to these terms and has so advised the State agency, it need not advise the State agency of subsequent contracts. The Contractor may advise the State agency when it is no longer bound by this contract clause.

(d) *Applicability*. This clause does not apply to the listing of employment openings that occur and are filled outside the 50 States, the District of Columbia, the Commonwealth of Puerto Rico, the Commonwealth of the Northern Mariana Islands, American Samoa, Guam, the Virgin Islands of the
United States, and Wake Island.

(e) *Postings*. (1) The Contractor shall post employment notices in conspicuous places that are available to employees and applicants for employment.

(2) The employment notices shall—

(i) State the rights of applicants and employees as well as the Contractor's obligation under the law to take affirmative action to employ and advance in employment qualified employees and applicants who are special disabled veterans, veterans of the Vietnam era, and other eligible veterans; and

(ii) Be in a form prescribed by the Deputy Assistant Secretary for Federal Contract Compliance Programs, Department of Labor (Deputy Assistant Secretary of Labor), and provided by or through the Contracting Officer.

(3) The Contractor shall ensure that applicants or employees who are special disabled veterans are informed of the contents of the notice (e.g., the Contractor may have the notice read to a visually disabled veteran, or may lower the posted notice so that it can be read by a person in a wheelchair).

(4) The Contractor shall notify each labor union or representative of workers with which it has a collective bargaining agreement, or other contract understanding, that the Contractor is bound by the terms of the Act and is committed to take affirmative action to employ, and advance in employment, qualified special disabled veterans, veterans of the Vietnam era, and other eligible veterans.

(f) *Noncompliance*. If the Contractor does not comply with the requirements of this clause, the Government may take appropriate actions under the rules, regulations, and relevant orders of the Secretary of Labor issued pursuant to the Act.

(g) *Subcontracts*. The Contractor shall insert the terms of this clause in all subcontracts or purchase orders of $25,000 or more unless exempted by rules, regulations, or orders of the Secretary of Labor. The Contractor shall act as specified by the Deputy Assistant Secretary of Labor to enforce the terms, including action for noncompliance.

(End of clause)

50. *FAR 52.222-36 AFFIRMATIVE ACTION FOR WORKERS WITH DISABILITIES (JUN 1998)

(a) General.

(1) Regarding any position for which the employee or applicant for employment is qualified, the Contractor shall not discriminate against any employee or applicant because of physical or mental disability. The Contractor agrees to take affirmative action to employ, advance in employment, and otherwise treat qualified individuals with disabilities without discrimination based upon their physical or mental disability in all employment practices such as--

(i) Recruitment, advertising, and job application procedures;

(ii) Hiring, upgrading, promotion, award of tenure, demotion, transfer, layoff, termination, right of return from layoff, and rehiring;

(iii) Rates of pay or other forms of compensation and changes in compensation;

(iv) Job assignments, job classifications, orgizational structures, position descriptions, lines of progression, and senority lists;

(v) Leaves of absence, sick leave, or any other leave;

(vi) Fringe benefits available by virtue of employment, whether or not administered by the Contractor;

(vii) Selection and financial support for training, including apprenticeships, professional meetings, conferences, and other related activities, and selection for leaves of absence to pursue training;

(viii) Activities sponsored by the Contractor, including social or recreational programs; and

(ix) Any other term, condition, or priviledge of employment.

(2) The Contractor agrees to comply with the rules, regulations, and relevant orders of the Secretary of Labor (Secretary) issued under the Rehabilitation Act of 1973 (29 U.S.C. 793) (the Act), as amended.

(b) Postings.

(1) The Contractor agrees to post employment notices stating--

(i) The Contractor's obligation under the law to take affirmative action to employ and advance in employment qualified individuals with disabilities; and

(ii) The rights of applicants and employees.

(2) These notices shall be posted in conspicuous places that are available to employees and applicants for employment. The Contractor shall ensure that applicants and employees with disabilities are informed of the contents of the notice (e.g., the Contractor may have the notice read to visually disabled individual, or may lower the posted notice so that it might be read by a person in a wheelchair). The notices shall be in a form prescribed by the Deputy Assistant Secretary for Federal Contract Compliance of the U.S. Department of Labor (Deputy Assistant Secretary) and shall be provided by or through the Contracting Officer.

(3) The Contractor shall notify each labor union or representative of workers with which it has a collective bargaining agreement or other contract understanding, that the Contractor is bound by the terms of Section 503 of the Act and is committed to take affirmative action to employ, and advance in employment, qualified individuals with physical or mental disabilities.

(c) Noncompliance. If the Contractor does not comply with the requirements of this clause, appropriate actions may be taken under the rules, regulations, and relevant orders of the Secretary issued pursuant to the Act.

(b) Subcontracts. The Contractor shall include the terms of this clause in every subcontract or purchase order in excess of $10,000 unless exempted by rules, regulations, or orders of the Secretary. The Contractor shall act as specified by the Deputy Assistant Secretary to enforce the terms, including action for noncompliance.

51. *FAR 52.222-37 EMPLOYMENT REPORTS ON SPECIAL DISABLED VETERANS, VETERANS OF THE VIETNAM ERA, AND OTHER ELIGIBLE VETERANS (DEC 2001)

(a) Unless the Contractor is a State or local government agency, the Contractor shall report at least annually, as required by the Secretary of Labor, on—

(1) The number of special disabled veterans, the number of veterans of the Vietnam era, and other eligible veterans in the workforce of the Contractor by job category and hiring location; and

(2) The total number of new employees hired during the period covered by the report, and of the total, the number of special disabled veterans, the number of veterans of the Vietnam era, and the number of other eligible veterans; and

(3) The maximum number and the minimum number of employees of the Contractor during the period covered by the report.

(b) The Contractor shall report the above items by completing the Form VETS-100, entitled "Federal Contractor Veterans' Employment Report (VETS-100 Report)".

(c) The Contractor shall submit VETS-100 Reports no later than September 30 of each year beginning September 30, 1988.

(d) The employment activity report required by paragraph (a)(2) of this clause shall reflect total hires during the most recent 12-month period as of the ending date selected for the employment profile report required by paragraph (a)(1) of this clause. Contractors may select an ending date—

(1) As of the end of any pay period between July 1 andAugust 31 of the year the report is due; or

(2) As of December 31, if the Contractor has prior writtenapproval from the Equal Employment Opportunity Commission to do so for purposes of submitting the Employer Information Report EEO-1 (Standard Form 100).

(e) The Contractor shall base the count of veterans reported according to paragraph (a) of this clause on voluntary disclosure. Each Contractor subject to the reporting requirements at 38 U.S.C. 4212 shall invite all special disabled veterans, veterans of the Vietnam era, and other eligible veterans who wish to benefit under the affirmative action program at 38 U.S.C. 4212 to identify themselves to the Contractor. The invitation shall state that—

(1) The information is voluntarily provided;

(2) The information will be kept confidential;

(3) Disclosure or refusal to provide the information will not subject the applicant or employee to any adverse treatment; and

(4) The information will be used only in accordance with the regulations promulgated under 38 U.S.C. 4212.

(f) The Contractor shall insert the terms of this clause in all subcontracts or purchase orders of $25,000 or more unless exempted by rules, regulations, or orders of the Secretary of Labor.

(End of clause)

52. *FAR 52.222-38 COMPLIANCE WITH VETERANS' EMPLOYMENT REPORTING REQUIREMENTS (DEC 2001)

By submission of its offer, the offeror represents that, if it is subject to the reporting requirements of 38 U.S.C. 4212(d) (*i.e.*, if it has any contract containing Federal Acquisition Regulation clause 52.222-37, Employment Reports on Special Disabled Veterans, Veterans of the Vietnam Era, and Other Eligible Veterans), it has submitted the most recent VETS-100 Report required by that clause.

(End of provision)

53. *FAR 52.223-3 HAZARDOUS MATERIAL IDENTIFICATION AND MATERIAL SAFETY DATA (JAN 1997)

(a) "Hazardous material," as used in this clause, includes any material defined as hazardous under the latest version of Federal Standard No. 313 (including revisions adopted during the term of the contract).

(b) The offeror must list any hazardous material, as defined in paragraph (a) of this clause, to be delivered under this contract. The hazardous material shall be properly identified and include any applicable identification number, such as National Stock Number or Special Item Number. This information shall also be included on the Material Safety Data Sheet submitted under this contract.

Material Identification No.

(If none, insert "None")

_____ _____
_____ _____
_____ _____

(c) This list must be updated during performance of the contract whenever the Contractor determines that any other material to be delivered under this contract is hazardous.

(d) The apparently successful offeror agrees to submit, for each item as required prior to award, a Material Safety Data Sheet, meeting the requirements of 29 CFR 1910.1200(g) and the latest version of Federal Standard No. 313, for all hazardous material identified in paragraph (b) of this clause. Data shall be submitted in accordance with Federal Standard No. 313, whether or not the apparently successful offeror is the actual manufacturer of these items. Failure to submit the Material Safety Data Sheet prior to award may result in the apparently successful offeror being considered nonresponsible and ineligible for award.

(e) If, after award, there is a change in the composition of the item(s) or a revision to Federal Standard No. 313, which renders incomplete or inaccurate the data submitted under paragraph (d) of this clause, the Contractor shall promptly notify the Contracting Officer and resubmit the data.

(f) Neither the requirements of this clause nor any act or failure to act by the Government shall relieve the Contractor of any responsibility or liability for the safety of Government, Contractor, or subcontractor personnel or property.

(g) Nothing contained in this clause shall relieve the Contractor from complying with applicable Federal, State, and local laws, codes, ordinances, and regulations (including the obtaining of licenses and permits) in connection with hazardous material.

(h) The Government's rights in data furnished under this contract with respect to hazardous material are as follows:

(1) To use, duplicate and disclose any data to which this clause is applicable. The purposes of this right are to--

(i) Apprise personnel of the hazards to which they may be exposed in using, handling, packaging, transporting, or disposing of hazardous materials;

(ii) Obtain medical treatment for those affected by the material; and

(iii) Have others use, duplicate, and disclose the data for the Government for these purposes.

(2) To use, duplicate, and disclose data furnished under this clause, in accordance with subparagraph (h)(1) of this clause, in precedence over any other clause of this contract providing for rights in data.

(3) The Government is not precluded from using similar or identical data acquired from other sources. (End of clause)

54. *FAR 52.223-5 POLLUTION PREVENTION AND RIGHT-TO-KNOW INFORMATION (APR 1998) [For Work on Federal Facilities]

(a) Executive Order 12856 of August 3, 1993, requires Federal facilities to comply with the provisions of the Emergency Planning and Community Right-to-Know Act of 1986 (EPCRA) (42 U.S.C. 11001-11050) and the Pollution Prevention Act of 1990 (PPA) (42 U.S.C. 13101-13109).

(b) The Contractor shall provide all information needed by the Federal facility to comply with the emergency planning reporting requirements of Section 302 of EPCRA; the emergency notice requirements of Section 304 of EPCRA; the list of Material Safety Data Sheets required by Section 311 of EPCRA; the emergency and hazardous chemical inventory forms of Section 312 of EPCRA; the toxic chemical release inventory of Section 313 of EPCRA, which includes the reduction and recycling information required by Section 6607 of PPA; and the toxic chemical reduction goals requirements of Section 3-302 of Executive Order 12856.

55. *FAR 52.223-6 DRUG-FREE WORKPLACE (MAY 2001)

(a) Definitions. As used in this clause--

"Controlled substance" means a controlled substance in schedules I through V of section 202 of the Controlled Substances Act (21 U.S.C. 812) and as further defined in regulation at 21 CFR 1308.11 - 1308.15.

"Conviction" means a finding of guilt (including a plea of nolo contendere) or imposition of sentence, or both, by any judicial body charged with the responsibility to determine violations of the Federal or State criminal drug statutes.

"Criminal drug statute" means a Federal or non-Federal criminal statute involving the manufacture, distribution, dispensing, possession or use of any controlled substance.

"Drug-free workplace" means the site(s) for the performance of work done by the Contractor in connection with a specific contract where employees of the Contractor are prohibited from engaging in the unlawful manufacture, distribution, dispensing, possession, or use of a controlled substance.

"Employee" means an employee of a Contractor directly engaged in the performance of work under a Government contract. "Directly engaged" is defined to include all direct cost employees and any other Contractor employee who has other than a minimal impact or involvement in contract performance.

"Individual" means an offeror/contractor that has no more than one employee including the offeror/contractor.

(b) The Contractor, if other than an individual, shall--within 30 days after award (unless a longer period is agreed to in writing for contracts of 30 days or more performance duration), or as soon as possible for contracts of less than 30 days performance duration--

(1) Publish a statement notifying its employees that the unlawful manufacture, distribution, dispensing, possession, or use of a controlled substance is prohibited in the Contractor's workplace and specifying the actions that will be taken against employees for violations of such prohibition;

(2) Establish an ongoing drug-free awareness program to inform such employees about--

(i) The dangers of drug abuse in the workplace;

(ii) The Contractor's policy of maintaining a drug-free workplace;

(iii) Any available drug counseling, rehabilitation, and employee assistance programs; and

(iv) The penalties that may be imposed upon employees for drug abuse violations occurring in the workplace.

(3) Provide all employees engaged in performance of the contract with a copy of the statement required by subparagraph (b)(1) of this clause;

(4) Notify such employees in writing in the statement required by subparagraph (b)(1) of this clause that, as a condition of continued employment on this contract, the employee will--

(i) Abide by the terms of the statement; and

(ii) Notify the employer in writing of the employee's conviction under a criminal drug statute for a violation occurring in the workplace no later than 5 days after such conviction.

(5) Notify the Contracting Officer in writing within 10 days after receiving notice under subdivision (b)(4)(ii) of this clause, from an employee or otherwise receiving actual notice of such conviction. The notice shall include the position title of the employee;

(6) Within 30 days after receiving notice under subdivision (b)(4)(ii) of this clause of a conviction, take one of the following actions with respect to any employee who is convicted of a drug abuse violation occurring in the workplace:

(i) Taking appropriate personnel action against such employee, up to and including termination; or

(ii) Require such employee to satisfactorily participate in a drug abuse assistance or rehabilitation program approved for such purposes by a Federal, State, or local health, law enforcement, or other appropriate agency; and

(7) Make a good faith effort to maintain a drug-free workplace through implementation of subparagraphs (b)(1) through (b)(6) of this clause.

(c) The Contractor, if an individual, agrees by award of the contract or acceptance of a purchase order, not to engage in the unlawful manufacture, distribution, dispensing, possession, or use of a controlled substance while performing this contract.

(d) In addition to other remedies available to the Government, the Contractor's failure to comply with the requirements of paragraph (b) or (c) of this clause may, pursuant to FAR 23.560, render the Contractor subject to suspension of contract payments, termination of the contract for default, and suspension or debarment.

56. FAR 52.223-9 ESTIMATE OF PERCENTAGE OF RECOVERED MATERIAL CONTENT FOR EPA-DESIGNATED PRODUCTS (AUG 2000) [For Contracts exceeding $100,000. EPA Designated product (available at http://www.epa.gov/cpg/)]

(a) Definitions. As used in this clause—

"Postconsumer material" means a material or finished product that has served its intended use and has been discarded for disposal or recovery, having completed its life as a consumer item. Postconsumer material is a part of the broader category of "recovered material."

"Recovered material" means waste materials and by-products recovered or diverted from solid waste, but the term does not include those materials and by-products generated
from, and commonly reused within, an original manufacturing process.

(b) The Contractor, on completion of this contract, shall—

(1) Estimate the percentage of the total recovered material used in contract performance, including, if applicable, the percentage of postconsumer material content; and

(2) Submit this estimate to the Contracting Officer.

(End of clause)

57. *FAR 52.223-14 TOXIC CHEMICAL RELEASE REPORTING (JUNE 2003)
[<u>For Contracts Over $100,000</u>]

(a) Unless otherwise exempt, the Contractor, as owner or operator of a facility used in the performance of this contract, shall file by July 1 for the prior calendar year an annual Toxic Chemical Release Inventory Form (Form R) as described in sections 313(a) and (g) of the Emergency Planning and Community Right-to-Know Act of 1986 (EPCRA) (42 U.S.C. 11023(a) and (g)), and section 6607 of the Pollution Prevention Act of 1990 (PPA) (42 U.S.C. 13106). The Contractor shall file, for each facility subject to the Form R filing and reporting requirements, the annual Form R throughout the life of the contract.

(b) A Contractor owned or operated facility use in the performance of this contract is exempt from the requirement to file an annual Form R if--

(1) The facility does not manufacture, process or otherwise use any toxic chemicals listed under section 313(c) of EPCRA, 42 U.S.C. 11023(c);

(2) The facility does not have 10 or more full-time employees as specified in section 313(b)(1)(A) of EPCRA, 42 U.S.C. 11023(b)(1)(A);

(3) The facility does not meet the reporting thresholds of toxic chemicals established under section 313(f) of EPCRA, 42 U.S.C. 11023(f) (including the alternate thresholds at 40 CFR 372.27, provided an appropriate certification form has been filed with EPA);

(4) The facility does not fall within Standard Industrial Classification Code (SIC) major groups 20 through 39 or their corresponding North American Industry Classification System (NAICS) sectors 31 through 33; or

(5) The facility is not located within any State of the United States or its outlying areas.

(c) If the Contractor has certified to an exemption in accordance with one or more of the criteria in paragraph (b) of this clause, and after award of the contract circumstances change so that any one of its owned or operated facilities used in the performance of this contract is no longer exempt-

(1) The Contractor shall notify the Contracting Officer;

and

(2) The Contractor, as ownor or operator of a facility used in the performance of this contract is no longer exempt, shall (i) submit a Toxic Chemical Release Inventory Form (Form R) on or before July 1 for the prior calendar year during which the facility becomes eligible; and (ii) continue to file the annual Form R for the life of the contract for such facility.

(d) The Contracting Officer may terminate this contract or take other action as appropriate, if the Contractor fails to comply accurately and fully with the EPCRA and PPA toxic chemical release filing and reporting requirements.

(e) Except for acquisitions of commercial items, as defined in FAR Part 2, the Contractor shall-

(1) For competitive subcontracts expected to exceed $100,000 (including all options), include a solicitation provision substantially the same as the provision at FAR 52.223-13, Certification of Toxic Chemical Release Reporting; and

(2) Include in any resultant subcontract exceeding $100,000 (including all options), the substance of this clause, except this paragraph (e).

58. DFARS 252.223-7006 PROHIBITION ON STORAGE AND DISPOSAL OF TOXIC AND HAZARDOUS MATERIALS (APR 1993)

(a) Definitions. As used in this clause--

(1) "Storage" means a non-transitory, semi-permanent or permanent holding, placement, or leaving of material. It does not include a temporary accumulation of a limited quantity of a material used in or a waste generated or resulting from authorized activities, such as servicing, maintenance, or repair of Department of Defense (DoD) items, equipment, or facilities.

(2) "Toxic or hazardous materials" means:

(i) Materials referred to in section 101(14) of the Comprehensive Environmental Response, Compensation, and Liability Act (CERCLA) of 1980 (42 U.S.C. 9601(14)) and materials designated under section 102 of CERCLA (42 U.S.C. 9602) (40 CFR Part 302);

(ii) Materials that are of an explosive, flammable, or pyrotechnic nature; or

(iii) Materials otherwise identified by the Secretary of Defense as specified in DoD regulations.

(b) In accordance with 10 U.S.C. 2692, the Contractor is prohibited from storing or disposing of non-DoD-owned toxic or hazardous materials on a DoD installation, except to the extent authorized by a statutory exception to 10 U.S.C. 2692 or as authorized by the Secretary of Defense or his designee.

59. *FAR 52.225-9 BUY AMERICAN ACT—CONSTRUCTION MATERIALS (JUNE 2003) (<u>For Contracts less than $6.481 million</u>)

(a) *Definitions*. As used in this clause—

"Component" means an article, material, or supply incorporated directly into a construction material.

"Construction material" means an article, material, or supply brought to the construction site by the Contractor or a subcontractor for incorporation into the building or work. The term also includes an item brought to the site preassembled from articles, materials, or supplies. However, emergency life safety systems, such as emergency lighting, fire alarm, and audio evacuation systems, that are discrete systems incorporated into a public building or work and that are produced as complete systems, are evaluated as a single and distinct construction material regardless of when or how the individual parts or components of those systems are delivered to the construction site. Materials purchased directly by the Government are supplies, not construction material.

"Cost of components" means—

(1) For components purchased by the Contractor, the acquisition cost, including transportation costs to the place of incorporation into the construction material (whether or not such costs are paid to a domestic firm), and any applicable duty (whether or not a duty-free entry certificate is issued); or

(2) For components manufactured by the Contractor, all costs associated with the manufacture of the component, including transportation costs as described in paragraph (1) of this definition, plus allocable overhead costs, but excluding profit. Cost of components does not include any costs associated with the manufacture of the end product.

"Domestic construction material" means—

(1) An unmanufactured construction material mined or produced in the United States; or

(2) A construction material manufactured in the United States, if the cost of its components mined, produced, or manufactured in the United States exceeds 50 percent of the cost of all its components. Components of foreign origin of the same class or kind for which nonavailability determinations have been made are treated as domestic.

"Foreign construction material" means a construction material other than a domestic construction material.

"United States" means the 50 States and the District of Columbia, and outlying areas.

(b) *Domestic preference*. (1) This clause implements the Buy American Act (41 U.S.C. 10a - 10d) by providing a preference for domestic construction material. The Contractor shall use only domestic construction material in performing this contract, except as provided in paragraphs (b)(2) and (b)(3) of this clause.

(2) This requirement does not apply to the construction material or components listed by the Government as follows:

_____

[*Contracting Officer to list applicable excepted materials or indicate "none"*]

(3) The Contracting Officer may add other foreign construction material to the list in paragraph (b)(2) of this clause if the Government determines that—

(i) The cost of domestic construction material would be unreasonable. The cost of a particular domestic construction material subject to the requirements of the Buy American Act is unreasonable when the cost of such material exceeds the cost of foreign material by more than 6 percent;

(ii) The application of the restriction of the Buy American Act to a particular construction material would be impracticable or inconsistent with the public interest; or

(iii) The construction material is not mined, produced, or manufactured in the United States in sufficient and reasonably available commercial quantities of a satisfactory quality.

(c) *Request for determination of inapplicability of the BuyAmerican Act*. (1)(i) Any Contractor request to use foreign construction material in accordance with paragraph (b)(3) of this clause shall include adequate information for Government evaluation of the request, including—

(A) A description of the foreign and domestic construction materials;

(B) Unit of measure;

(C) Quantity;

(D) Price;

(E) Time of delivery or availability;

(F) Location of the construction project;

(G) Name and address of the proposed supplier; and

(H) A detailed justification of the reason for use of foreign construction materials cited in accordance with paragraph (b)(3) of this clause.

(ii) A request based on unreasonable cost shall include a reasonable survey of the market and a completed price comparison table in the format in paragraph (d) of this clause.

(iii) The price of construction material shall include all delivery costs to the construction site and any applicable duty (whether or not a duty-free certificate may be issued).

(iv) Any Contractor request for a determination submitted after contract award shall explain why the Contractor could not reasonably foresee the need for such determination and could not have requested the determination before contract award. If the Contractor does not submit a satisfactory explanation, the Contracting Officer need not make a determination.

(2) If the Government determines after contract award that an exception to the Buy American Act applies and the Contracting Officer and the Contractor negotiate adequate consideration, the Contracting Officer will modify the contract to allow use of the foreign construction material. However, when the basis for the exception is the unreasonable price of a domestic construction material, adequate consideration is not less than the differential

established in paragraph (b)(3)(i) of this clause.

(3) Unless the Government determines that an exception to the Buy American Act applies, use of foreign construction material is noncompliant with the Buy American Act.

(d) *Data*. To permit evaluation of requests under paragraph (c) of this clause based on unreasonable cost, the Contractor shall include the following information and any applicable supporting data based on the survey of suppliers:

FOREIGN AND DOMESTIC CONSTRUCTION MATERIALS PRICE COMPARISON			
Construction Material Description	Unit of Measure	Quantity	Price (Dollars)*
Item 1:			
Foreign construction material	_____	_____	_____
Domestic construction material	_____	_____	_____
Item 2:			
Foreign construction material	_____	_____	_____
Domestic construction material	_____	_____	_____

[List *name, address, telephone number, and contact for suppliers surveyed. Attach copy of response; if oral, attach summary.]*
[Include other applicable supporting information.]
[Include all delivery costs to the construction site and any applicable duty (whether or not a duty-free entry certificate is issued).]*

60. *FAR 52.225-10 NOTICE OF BUY AMERICAN ACT REQUIREMENT—CONSTRUCTION MATERIALS (MAY 2002) (Applicable with FAR 52.225-9)

(a) *Definitions*. "Construction material," "domestic construction material," and "foreign construction material," as used in this provision, are defined in the clause of this solicitation entitled "Buy American Act—Construction Materials" (Federal Acquisition Regulation (FAR) clause 52.225-9).

(b) *Requests for determinations of inapplicability*. An offeror requesting a determination regarding the inapplicability of the Buy American Act should submit the request to the Contracting Officer in time to allow a determination before submission of offers. The offeror shall include the information and applicable supporting data required by paragraphs (c) and (d) of the clause at FAR 52.225-9 in the request. If an offeror has not requested a determination regarding the inapplicability of the Buy American Act before submitting its offer, or has not received a response to a previous request, the offeror shall include the information and supporting data in the offer.

(c) *Evaluation of offers*. (1) The Government will evaluate an offer requesting exception to the requirements of the Buy American Act, based on claimed unreasonable cost of domestic construction material, by adding to the offered price the appropriate percentage of the cost of such foreign construction material, as specified in paragraph (b)(3)(i) of the clause at FAR 52.225-9.

(2) If evaluation results in a tie between an offeror that requested the substitution of foreign construction material based on unreasonable cost and an offeror that did not request an exception, the Contracting Officer will award to the offeror that did not request an exception based on unreasonable cost.

(d) *Alternate offers*. (1) When an offer includes foreign construction material not listed by the Government in this solicitation in paragraph (b)(2) of the clause at FAR 52.225-9, the offeror also may submit an alternate offer based on use of equivalent domestic construction material.

(2) If an alternate offer is submitted, the offeror shall submit a separate Standard Form 1442 for the alternate offer, and a separate price comparison table prepared in accordance with paragraphs (c) and (d) of the clause at FAR 52.225-9 for the offer that is based on the use of any foreign construction material for which the Government has not yet determined an exception applies.

(3) If the Government determines that a particular exception requested in accordance with paragraph (c) of the clause at FAR 52.225-9 does not apply, the Government will evaluate only those offers based on use of the equivalent domestic construction material, and the offeror shall be required to furnish such domestic construction material. An offer based on use of the foreign construction material for which an exception was

requested—

(i) Will be rejected as nonresponsive if this acquisition is conducted by sealed bidding; or

(ii) May be accepted if revised during negotiations.

(End of provision)

61. *FAR 52.225-11 BUY AMERICAN ACT—CONSTRUCTION MATERIALS UNDER TRADE AGREEMENTS (JUNE 2003) [For Contracts more than $6,481,000] ALTERNATE I (MAY 2002) [For Contracts between $6.481 and 7.304733 Million]

(a) *Definitions*. As used in this clause—

"Component" means an article, material, or supply incorporated directly into a construction material.

"Construction material" means an article, material, or supply brought to the construction site by the Contractor or subcontractor for incorporation into the building or work. The term also includes an item brought to the site preassembled from articles, materials, or supplies. However, emergency life safety systems, such as emergency lighting, fire alarm, and audio evacuation systems, that are discrete systems incorporated into a public building or work and that are produced as complete systems, are evaluated as a single and distinct construction material regardless of when or how the individual parts or components of those systems are delivered to the construction site. Materials purchased directly by the Government are supplies, not construction material.

"Cost of components" means—

(1) For components purchased by the Contractor, the acquisition cost, including transportation costs to the place of incorporation into the construction material (whether or not such costs are paid to a domestic firm), and any applicable duty (whether or not a duty-free entry certificate is issued); or

(2) For componentsmanufactured by the Contractor, all costs associated with the manufacture of the component, including transportation costs as described in paragraph (1) of this definition, plus allocable overhead costs, but excluding profit. Cost of components does not include any costs associated with the manufacture of the end product.

"Designated country" means any of the following countries:

Aruba	Kiribati
Austria	Korea, Republic of
Bangladesh	Lesotho
Belgium	Liechtenstein
Benin	Luxembourg
Bhutan	Malawi
Botswana	Maldives
Burkina Faso	Mali
Burundi	Mozambique
Canada	Nepal
Cape Verde	Netherlands
Central African Republic	Niger
Chad	Norway
Comoros	Portugal
Denmark	Rwanda
Djibouti	Sao Tome and Principe
Equatorial Guinea	Sierra Leone
Finland	Singapore
France	Somalia
Gambia	Spain
Germany	Sweden
Greece	Switzerland
Guinea	Tanzania U.R.
Guinea-Bissau	Togo
Haiti	Tuvalu

Hong Kong	Uganda
Iceland	United Kingdom
Ireland	Vanuatu
Israel	Western Samoa
Italy	Yemen
Japan	

"Designated country construction material" means a construction material that—

(1) Is wholly the growth, product, or manufacture of a designated country; or

(2) In the case of a construction material that consists in whole or in part of materials from another country, has been substantially transformed in a designated country into a new and different construction material distinct from the materials from which it was transformed.

"Domestic construction material" means—

(1) An unmanufactured construction material mined or produced in the United States; or

(2) A construction material manufactured in the United States, if the cost of its components mined, produced, or manufactured in the United States exceeds 50 percent of the cost of all its components. Components of foreign origin of the same class or kind for which nonavailability determinations have been made are treated as domestic.

"Foreign construction material" means a construction material other than a domestic construction material.

"North American Free Trade Agreement country" means Canada or Mexico.

"North American Free Trade Agreement country construction material" means a construction material that—

(1) Is wholly the growth, product, or manufacture of a North American Free Trade Agreement (NAFTA) country; or

(2) In the case of a construction material that consists in whole or in part of materials from another country, has been substantially transformed in a NAFTA country into a new and different construction material distinct from the materials from which it was transformed.

"United States" means the 50 States and the District of Columbia, and outlying areas.

(b) *Construction materials*. (1) This clause implements the Buy American Act (41 U.S.C. 10a - 10d) by providing a preference for domestic construction material. In addition, the Contracting Officer has determined that the Trade Agreements Act and the North American Free Trade Agreement (NAFTA) apply to this acquisition. Therefore, the Buy American Act restrictions are waived for designated country and NAFTA country construction materials.

(2) The Contractor shall use only domestic, designated country, or NAFTA country construction material in performing this contract, except as provided in paragraphs (b)(3) and (b)(4) of this clause.

(3) The requirement in paragraph (b)(2) of this clause does not apply to the construction materials or components listed by the Government as follows:

_____

[*Contracting Officer to list applicable excepted materials or indicate "none"*]

(4) The Contracting Officer may add other foreign construction material to the list in paragraph (b)(3) of this clause if the Government determines that—

(i) The cost of domestic construction material would be unreasonable. The cost of a particular domestic construction material subject to the restrictions of the Buy American Act is unreasonable when the cost of such material exceeds the cost of foreign material by more than 6 percent;

(ii) The application of the restriction of the Buy American Act to a particular construction material would be impracticable or inconsistent with the public interest; or

(iii) The construction material is not mined, produced, or manufactured in the United States in sufficient and reasonably available commercial quantities of a satisfactory quality.

(c) *Request for determination of inapplicability of the Buy American Act*. (1)(i) Any Contractor request to use foreign construction material in accordance with paragraph (b)(4) of this clause shall include adequate information for Government evaluation of the request, including—

(A) A description of the foreign and domestic construction materials;

(B) Unit of measure;

(C) Quantity;
(D) Price;
(E) Time of delivery or availability;
(F) Location of the construction project;
(G) Name and address of the proposed supplier; and
(H) A detailed justification of the reason for use of foreign construction materials cited in accordance with paragraph (b)(3) of this clause.

(ii) A request based on unreasonable cost shall include a reasonable survey of the market and a completed price comparison table in the format in paragraph (d) of this clause.

(iii) The price of construction material shall include all delivery costs to the construction site and any applicable duty (whether or not a duty-free certificate may be issued).

(iv) Any Contractor request for a determination submitted after contract award shall explain why the Contractor could not reasonably foresee the need for such determination and could not have requested the determination before contract award. If the Contractor does not submit a satisfactory explanation, the Contracting Officer need not make a determination.

(2) If the Government determines after contract award that an exception to the Buy American Act applies and the Contracting Officer and the Contractor negotiate adequate consideration, the Contracting Officer will modify the contract to allow use of the foreign construction material. However, when the basis for the exception is the unreasonable price of a domestic construction material, adequate consideration is not less than the differential established in paragraph (b)(4)(i) of this clause.

(3) Unless the Government determines that an exception to the Buy American Act applies, use of foreign construction material is noncompliant with the Buy American Act.

(d) *Data*. To permit evaluation of requests under paragraph (c) of this clause based on unreasonable cost, the Contractor shall include the following information and any applicable supporting data based on the survey of suppliers:

FOREIGN AND DOMESTIC CONSTRUCTION MATERIALS PRICE COMPARISON			
Construction Material Description	Unit of Measure	Quantity	Price (Dollars)*
Item 1:			
Foreign construction material	_____	_____	_____
Domestic construction material	_____	_____	_____
Item 2:			
Foreign construction material	_____	_____	_____
Domestic construction material	_____	_____	_____

[List *name, address, telephone number, and contact for suppliers surveyed. Attach copy of response; if oral, attach summary.] [Include other applicable supporting information.]*
[Include all delivery costs to the construction site and any applicable duty (whether or not a duty-free entry certificate is issued).]*

(End of clause)

Alternate I (May 2002). As prescribed in 25.1102(c)(3), delete the definitions of "North American Free Trade Agreement country" and "North American Free Trade Agreement country construction material" from the definitions in paragraph (a) of the basic clause and substitute the following paragraphs (b)(1) and (b)(2) for paragraphs (b)(1) and (b)(2) of the basic clause:

(b) *Construction materials*. (1) This clause implements the Buy American Act (41 U.S.C. 10a - 10d) by providing a preference for domestic construction material. In addition, the Contracting Officer has determined that the Trade Agreements Act applies to this acquisition. Therefore, the Buy American Act restrictions are waived for designated country construction materials.

(2) The Contractor shall use only domestic or designated country construction material in performing this

contract, except as provided in paragraphs (b)(3) and (b)(4) of this clause.

62. *FAR 52.225-12 NOTICE OF BUY AMERICAN ACT REQUIREMENT—CONSTRUCTION MATERIALS UNDER TRADE AGREEMENTS (MAY 2002) [Applicable with FAR 52.225-11] ALTERNATE II (MAY 2002) [For Contracts Between 6.481 and 7.304733 Million]

(a) *Definitions.* "Construction material," "designated country construction material," "domestic construction material," "foreign construction material," and "NAFTA country construction material," as used in this provision, are defined in the clause of this solicitation entitled "Buy American Act—Construction Materials under Trade Agreements" (Federal Acquisition Regulation (FAR) clause 52.225-11).

(b) *Requests for determination of inapplicability*. An offeror requesting a determination regarding the inapplicability of the Buy American Act should submit the request to the Contracting Officer in time to allow a determination before submission of offers. The offeror shall include the information and applicable supporting data required by paragraphs (c) and (d) of FAR clause 52.225-11 in the request. If an offeror has not requested a determination regarding the inapplicability of the Buy American Act before submitting its offer, or has not received a response to a previous request, the offeror shall include the information and supporting data in the offer.

(c) *Evaluation of offers*. (1) The Government will evaluate an offer requesting exception to the requirements of the Buy American Act, based on claimed unreasonable cost of domestic construction materials, by adding to the offered price the appropriate percentage of the cost of such foreign construction material, as specified in paragraph (b)(4)(i) of FAR clause 52.225-11.

(2) If evaluation results in a tie between an offeror that requested the substitution of foreign construction material based on unreasonable cost and an offeror that did not request an exception, the Contracting Officer will award to the offeror that did not request an exception based on unreasonable cost.

(d) *Alternate offers*. (1) When an offer includes foreign construction material, other than designated country or NAFTA country construction material, that is not listed by the Government in this solicitation in paragraph (b)(3) of FAR clause 52.225-11, the offeror also may submit an alternate offer based on use of equivalent domestic, designated country, or NAFTA country construction material.

(2) If an alternate offer is submitted, the offeror shall submit a separate Standard Form 1442 for the alternate offer, and a separate price comparison table prepared in accordance with paragraphs (c) and (d) of FAR clause 52.225-11 for the offer that is based on the use of any foreign construction material for which the Government has not yet determined an exception applies.

(3) If the Government determines that a particular exception requested in accordance with paragraph (c) of FAR clause 52.225-11 does not apply, the Government will evaluate only those offers based on use of the equivalent domestic, designated country, or NAFTA country construction material, and the offeror shall be required to furnish such domestic, designated country, or NAFTA country construction material. An offer based on use of the foreign construction material for which an exception was requested—

(i) Will be rejected as nonresponsive if this acquisition is conducted by sealed bidding; or

(ii) May be accepted if revised during negotiations.

(End of provision)

ALTERNATE II (MAY 2002) **[For Contracts between 6.481 and 7.304733 Million]**
As prescribed in 25.1102(d)(3), substitute the following paragraphs (a) and (d) for paragraphs (a) and (d) of the basic provision:

(a) *Definitions*. "Construction material," "designated country construction material," "domestic construction material," and "foreign construction material," as used in this provision, are defined in the clause of this solicitation entitled "Buy American Act—Construction Materials under Trade Agreements" (Federal Acquisition Regulation (FAR) clause 52.225-11).

(d) *Alternate offers*. (1) When an offer includes foreign construction material, other than designated country construction material, that is not listed by the Government in this solicitation in paragraph (b)(3) of FAR clause 52.225-11, the offeror also may submit an alternate offer based on use of equivalent domestic or designated country construction material.

(2) If an alternate offer is submitted, the offeror shall submit a separate Standard Form 1442 for the alternate offer, and a separate price comparison table prepared in accordance with paragraphs (c) and (d) of FAR

clause 52.225-11 for the offer that is based on the use of any foreign construction material for which the Government has not yet determined an exception applies.

(3) If the Government determines that a particular exception requested in accordance with paragraph (c) of FAR clause 52.225-11 does not apply, the Government will evaluate only those offers based on use of the equivalent domestic or designated country construction material, and the offeror shall be required to furnish such domestic or designated country construction material. An offer based on use of the foreign construction material for which an exception was requested—

(i) Will be rejected as nonresponsive if this acquisition is conducted by sealed bidding; or

(ii) May be accepted if revised during negotiations.

63. *FAR 52.225-13 RESTRICTIONS ON CERTAIN FOREIGN PURCHASES (JUNE 2003)

(a) The Contractor shall not acquire, for use in the performance of this contract, any supplies or services originating from sources within, or that were located in or transported from or through, countries whose products are banned from importation into the United States and its outlying areas under regulations of the Office of Foreign Assets Control, Department of the Treasury. Those countries are Cuba, Iran, Iraq, Libya, North Korea, Sudan, the territory of Afghanistan controlled by the Taliban , and Serbia (excluding the territory of Kosovo).

(b) The Contractor shall not acquire for use in the performance of this contract any supplies or services from entities controlled by the government of Iraq.

(c) The Contractor shall insert this clause, including this paragraph (c), in all subcontracts.

(End of clause)

64. DFARS 252.226-7001 UTILIZATION OF INDIAN ORGANIZATIONS AND INDIAN-OWNED ECONOMIC ENTERPRISES--DOD CONTRACTS (SEP 2001)

(a) *Definitions.* As used in this clause--

"Indian" means any person who is a member of any Indian tribe, band, group, pueblo, or community that is recognized by the Federal Government as eligible for services from the Bureau of Indian Affairs (BIA) in accordance with 25 U.S.C. 1452(c) and any "Native" as defined in the Alaska Native Claims Settlement Act (43 U.S.C. 1601).

"Indian organization" means the governing body of any Indian tribe or entity established or recognized by the governing body of an Indian tribe for the purposes of 25 U.S.C. Chapter 17.

"Indian-owned economic enterprise" means any Indian-owned (as determined by the Secretary of the Interior) commercial, industrial, or business activity established or organized for the purpose of profit, provided that Indian ownership constitutes not less than 51 percent of the enterprise.

"Indian tribe" means any Indian tribe, band, group, pueblo, or community, including native villages and native groups (including corporations organized by Kenai, Juneau, Sitka, and Kodiak) as defined in the Alaska Native Claims Settlement Act, that is recognized by the Federal Government as eligible for services from BIA in accordance with 25 U.S.C. 1452(c).

"Interested party" means a contractor or an actual or prospective offeror whose direct economic interest would be affected by the award of a subcontract or by the failure to award a subcontract.

(b) The Contractor shall use its best efforts to give Indian organizations and Indian-owned economic enterprises the maximum practicable opportunity to participate in the subcontracts it awards, to the fullest extent consistent with efficient performance of the contract.

(c) The Contracting Officer and the Contractor, acting in good faith, may rely on the representation of an Indian organization or Indian-owned economic enterprise as to its eligibility, unless an interested party challenges its status or the Contracting Officer has independent reason to question that status.

(d) In the event of a challenge to the representation of a subcontractor, the Contracting Officer will refer the matter to the--

U.S. Department of the Interior

Bureau of Indian Affairs
Attn: Chief, Division of Contracting and
Grants Administration
1849 C Street NW, MS-2626-MIB
Washington, DC 20240-4000.

The BIA will determine the eligibility and will notify the Contracting Officer. No incentive payment will be made--

(1) Within 50 working days of subcontract award;
(2) While a challenge is pending; or
(3) If a subcontractor is determined to be an ineligible participant.

(e)(1) The Contractor, on its own behalf or on behalf of a subcontractor at any tier, may request an adjustment under the Indian Incentive Program to the following:

(i) The estimated cost of a cost-type contract.
(ii) The target cost of a cost-plus-incentive-fee contract.
(iii) The target cost and ceiling price of a fixed-price incentive contract.
(iv) The price of a firm-fixed-price contract.

(2) The amount of the adjustment that may be made to the contract is 5 percent of the estimated cost, target cost, or firm-fixed price included in the subcontract initially awarded to the Indian organization or Indian-owned economic enterprise.

(3) The Contractor has the burden of proving the amount claimed and must assert its request for an adjustment prior to completion of contract performance.

(4) The Contracting Officer, subject to the terms and conditions of the contract and the availability of funds, will authorize an incentive payment of 5 percent of the amount paid to the subcontractor.

(5) If the Contractor requests and receives an adjustment on behalf of a subcontractor, the Contractor is obligated to pay the subcontractor the adjustment.

(f) The Contractor shall insert the substance of this clause, including this paragraph (f), in all subcontracts that--

(1) Are for other than commercial items; and
(2) Are expected to exceed the simplified acquisition threshold in Part 2 of the Federal Acquisition Regulation.

(End of clause)

65. *FAR 52.227-1 AUTHORIZATION AND CONSENT (JUL 1995)

(a) The Government authorizes and consents to all use and manufacture, in performing this contract or any subcontract at any tier, of any invention described in and covered by a United States patent

(1) embodied in the structure or composition of any article the delivery of which is accepted by the Government under this contract or

(2) used in machinery, tools, or methods whose use necessarily results from compliance by the Contractor or a subcontractor with

(i) specifications or written provisions forming a part of this contract or
(ii) specific written instructions given by the Contracting Officer directing the manner of performance. The entire liability to the Government for infringement of a patent of the United States shall be determined solely by the provisions of the indemnity clause, if any, included in this contract or any subcontract hereunder (including any lower-tier subcontract), and the Government assumes liability for all other infringement to the extent of the authorization and consent hereinabove granted.

(b) The Contractor agrees to include, and require inclusion of, this clause, suitably modified to identify the parties, in all subcontracts at any tier for supplies or services (including construction, architect-engineer services, and materials, supplies, models, samples, and design or testing services expected to exceed the simplified acquisition threshold) however, omission of this clause from any subcontract, including those at or below the simplified acquisition threshold, does not affect this authorization and consent.

66. *FAR 52.227-2 NOTICE AND ASSISTANCE REGARDING PATENT AND COPYRIGHT INFRINGEMENT (AUG 1996)

(a) The Contractor shall report to the Contracting Officer, promptly and in reasonable written detail, each notice or claim of patent or copy-right infringement based on the performance of this contract of which the Contractor has knowledge.

(b) In the event of any claim or suit against the Government on account of any alleged patent or copyright infringement arising out of the performance of this contract or out of the use of any supplies furnished or work or services performed under this contract, the Contractor shall furnish to the Government, when requested by the Contracting Officer, all evidence and information in possession of the Contractor pertaining to such suit or claim. Such evidence and information shall be furnished at the expense of the Government except where the Contractor has agreed to indemnify the Government.

(c) The Contractor agrees to include, and require inclusion of, this clause in all subcontracts at any tier for supplies or services (including construction and architect-engineer subcontracts and those for material, supplies, models, samples, or design or testing services) expected to exceed the simplified acquistion threshold at FAR 2.101.

67. *FAR 52.227-4 PATENT INDEMNITY--CONSTRUCTION CONTRACTS (APR 1984)

Except as otherwise provided, the Contractor agrees to indemnify the Government and its officers, agents, and employees against liability, including costs and expenses, for infringement upon any United States patent (except a patent issued upon an application that is now or may hereafter be withheld from issue pursuant to a Secrecy Order under 35 U.S.C. 181) arising out of performing this contract or out of the use or disposal by or for the account of the Government of supplies furnished or work performed under this contract.

68. DFARS 252.227-7022 GOVERNMENT RIGHTS (UNLIMITED) (MAR 1979)

The Government shall have unlimited rights, in all drawings, designs, specifications, notes and other works developed in the performance of this contract, including the right to use same on any other Government design or construction without additional compensation to the Contractor. The Contractor hereby grants to the Government a paid-up license throughout the world to all such works to which he may assert or establish any claim under design patent or copyright laws. The Contractor for a period of three (3) years after completion of the project agrees to furnish the original or copies of all such works on the request of the Contracting Officer. (End of clause)

69. DFARS 252.227-7023 DRAWINGS AND OTHER DATA TO BECOME PROPERTY OF GOVERNMENT (MAR 1979)

All designs, drawings, specifications, notes and other works developed in the performance of this contract shall become the sole property of the Government and may be used on any other design or construction without additional compensation to the Contractor. The Government shall be considered the "person for whom the work was prepared" for the purpose of authorship in any copyrightable work under 17 U.S.C. 201(b). With respect thereto, the Contractor agrees not to assert or authorize others to assert any rights nor establish any claim under the design patent or copyright laws. The Contractor for a period of three (3) years after completion of the project agrees to furnish all retained works on the request of the Contracting Officer. Unless otherwise provided in this contract, the Contractor shall have the right to retain copies of all works beyond such period.

70. DFARS 252.227-7033 RIGHTS IN SHOP DRAWINGS (APR 1966)

(a) Shop drawings for construction means drawings, submitted to the Government by the Construction Contractor, subcontractor or any lower-tier subcontractor pursuant to a construction contract, showing in detail

(i) the proposed fabrication and assembly of structural elements and (ii) the installation (i.e., form, fit, and attachment details) of materials or equipment. The Government may duplicate, use, and disclose in any manner and for any purpose shop drawings delivered under this contract.

(b) This clause, including this paragraph (b), shall be included in all subcontracts hereunder at any tier.

71. *FAR 52.228-2 ADDITIONAL BOND SECURITY (OCT 1997)

The Contractor shall promptly furnish additional security required to protect the Government and persons supplying labor or materials under this contract if--

(a) Any surety upon any bond, or issuing financial institution for other security, furnished with this contract becomes unacceptable to the Government;

(b) Any surety fails to furnish reports on its financial condition as required by the Government;

(c) The contract price is increased so that the penal sum of any bond becomes inadequate in the opinion of the Contracting Officer; or

(d) An irrevocable letter of credit (ILC) used as security will expire before the end of the period of required security. If the Contractor does not furnish an acceptable extension or replacement ILC, or other acceptable substitute, at least 30 days before an ILC's scheduled expiration, the Contracting Officer has the right to immediately draw on the ILC.

72. *FAR 52.228-5 INSURANCE--WORK ON A GOVERNMENT INSTALLATION (JAN 1997) [For Contracts Exceeding $100,000]

(a) The Contractor shall, at its own expense, provide and maintain during the entire performance of this contract, at least the kinds and minimum amounts of insurance required in the Schedule or elsewhere in the contract.

(b) Before commencing work under this contract, the Contractor shall notify the Contracting Officer in writing that the required insurance has been obtained. The policies evidencing required insurance shall contain an endorsement to the effect that any cancellation or any material change adversely affecting the Government's interest shall not be effective

(1) for such period as the laws of the State in which this contract is to be performed prescribe, or

(2) until 30 days after the insurer or the Contractor gives written notice to the Contracting Officer, whichever period is longer.

(c) The Contractor shall insert the substance of this clause, including this paragraph (c), in subcontracts under this contract that require work on a Government installation and shall require subcontractors to provide and maintain the insurance required in the Schedule or elsewhere in the contract. The Contractor shall maintain a copy of all subcontractors' proofs of required insurance, and shall make copies available to the Contracting Officer upon request.

73. *FAR 52.228-11 PLEDGES OF ASSETS (FEB 1992)

(a) Offerors shall obtain from each person acting as an individual surety on a bid guarantee, a performance bond, or a payment bond--

(1) Pledge of assets; and

(2) Standard Form 28, Affidavit of Individual Surety.

(b) Pledges of assets from each person acting as an individual surety shall be in the form of--

(1) Evidence of an escrow account containing cash, certificates of deposit, commercial or Government securities, or other assets described in FAR 28.203-2 (except see 28.203-2(b)(2) with respect to Government securities held in book entry form) and/or;

(2) A recorded lien on real estate. The offeror will be required to provide--

(i) Evidence of title in the form of a certificate of title prepared by a title insurance company approved by the United States Department of Justice. This title evidence must show fee simple title vested in the surety along with any concurrent owners; whether any real estate taxes are due and payable; and any recorded encumbrances against the property, including the lien filed in favor of the Government as required by FAR 28.203-3(d);

(ii) Evidence of the amount due under any encumbrance shown in the evidence of title;

(iii) A copy of the current real estate tax assessment of the property or a current appraisal dated no earlier than 6 months prior to the date of the bond, prepared by a professional appraiser who certifies that the appraisal has been conducted in accordance with the generally accepted appraisal standards as reflected in the Uniform Standards of Professional Appraisal Practice, as promulgated by the Appraisal Foundation.

74. *FAR 52.228-12 PROSPECTIVE SUBCONTRACTOR REQUESTS FOR BONDS (OCT 1995)

In accordance with Section 806(a)(3) of Public Law 102-190, as amended by Sections 2091 and 8105 of Pub. L. 103-355, upon the request of a prospective subcontractor or supplier offering to furnish labor or material for the performance of this contract for which a payment bond has been furnished to the Government pursuant to the Miller Act, the Contractor shall promptly provide a copy of such payment bond to the requestor.

75. FAR 52.228-14 IRREVOCABLE LETTER OF CREDIT (DEC 1999)

(a) "Irrevocable letter of credit" (ILC), as used in this clause, means a written commitment by a federally insured financial institution to pay all or part of a stated amount of money, until the expiration date of the letter, upon presentation by the Government (the beneficiary) of a written demand therefor. Neither the financial institution nor the offeror/Contractor can revoke or condition the letter of credit.

(b) If the offeror intends to use an ILC in lieu of a bid bond, or to secure other types of bonds such as performance and payment bonds, the letter of credit and letter of confirmation formats in paragraphs (e) and (f) of this clause shall be used.

(c) The letter of credit shall be irrevocable, shall require presentation of no document other than a written demand and the ILC (including confirming letter, if any), shall be issued/confirmed by an acceptable federally insured financial institution as provided in paragraph (d) of this clause, and--

(1) If used as a bid guarantee, the ILC shall expire no earlier than 60 days after the close of the bid acceptance period;

(2) If used as an alternative to corporate or individual sureties as security for a performance or payment bond, the offeror/Contractor may submit an ILC to cover the entire period of performance or may submit an ILC with an initial expiration date estimated to cover the entire period for which financial security is required or may submit an ILC with an an initial expiration that is a minimum period of one year from the date of issuance. The ILC shall provide that, unless the issuer provides the beneficiary written notice of non-renewal of least 60 days in advance of the current expiration date, the ILC is automatically extended without amendment for one year from the expiration date, or any future expiration date, until the period of required coverage is completed and the Contracting Officer provides the financial institution with a written statement waiving the right to payment. The period of required coverage shall be:

(i) For contracts subject to the Miller Act, the later of--

(A) One year following the expected date of final payment;

(B) For performance bonds only, until completion of any warranty period; or

(C) For payment bonds only, until resolution of all claims filed against the payment bond during the one-year period following final payment.

(ii) For contracts not subject to the Miller Act, the later of--

(A) 90 days following final payment; or

(B) For performance bonds only, until completion of any warranty period.

(d) Only federally insured financial institution rated investment grade or higher shall issue or confirm the ILC. The offeror/Contractor shall provide the Contracting Officer a credit rating that indicates the financial institution has the required rating(s) as of the date of issuance of the ILC. Unless the financial institution issuing the ILC had letter of credit business of at least $25 million in the past year, ILCs over $5 million must be confirmed by another acceptable financial institution that had letter of credit business of at least $25 million in the past year.

(e) The following format shall be used by the issuing financial institution to create an ILC:

[Issuing Financial Institution's Letterhead or Name and Address]

Issue Date ----------

Irrevocable Letter of Credit No.----------
Account party's name----------
Account party's address----------
For Solicitation No.----------
(For reference only)

TO: [U.S. Government agency]
[U.S. Government agency's address]

1. We hereby establish this irrevocable and transferable Letter of Credit in your favor for one or more drawings up to United States $_____. This Letter of Credit is payable at [issuing financial institution's and, if any, confirming financial institution's] office at [issuing financial institution's address and, if any, confirming financial institution's address] and expires with our close of business on _____, or any automatically extended expiration date.

2. We hereby undertake to honor your or transferee's sight draft(s) drawn on issuing or, if any, the confirming financial institution, for all or any part of this credit if presented with this Letter of Credit and confirmation, if any, at the office specified in paragraph 1 of this Letter of Credit on or before the expiration date or any automatically extended expiration date.

3. [This paragraph is omitted if used as a bid guarantee, and subsequent paragraphs are renumbered.] It is a condition of this Letter of Credit that it is deemed to be automatically extended without amendment for one year from the expiration date hereof, or any future expiration date, unless at least 60 days prior to any expiration date, we notify you or the transferee by registered mail, or other receipted means of delivery, that we elect not to consider this Letter of Credit renewed for any such additional period. At the time we notify you, we also agree to notify the account party (and confirming financial institution, if any) by the same means of delivery.

4. This Letter of Credit is transferable. Transfers and assignments of proceeds are to be effected without charge to either the beneficiary or the transferee/assignee of proceeds. Such transfer or assignment shall be only at the written direction of the Government (the beneficiary) in a form satisfactory to the issuing financial institution and the confirming financial institution, if any.

5. This Letter of Credit is subject to the Uniform Customs and Practice (UCP) for Documentary Credits, 1993 Revision, International Chamber of Commerce Publication No. 500, and to the extent not inconsistent therewith, to the laws of _____ [state of confirming financial institution, if any, otherwise state of issuing financial institution].

6. If this credit expires during an interruption of business of this financial institution as described in Article 17 of the UCP, the financial institution specifically agrees to effect payment if this credit is drawn against within 30 days after the resumption of our business.

Sincerely,

[Issuing financial institution]

(f) The following format shall be used by the financial institution to confirm an ILC:

[Confirming Financial Institution's Letterhead or Name and Address]---

(Date)_____

Our Letter of Credit
Advice Number----------
Beneficiary:----------
[U.S. Government agency]
Issuing Financial Institution:----------
Issuing Financial Institution's LC No.:----------

Gentlemen:

1. We hereby confirm the above indicated Letter of Credit, the original of which is attached, issued by _____ [name of issuing financial institution] for drawings of up to United States dollars _____/U.S. $_____ and expiring with our close of business on _____ [the expiration date], or any automatically extended expiration date.

2. Draft(s) drawn under the Letter of Credit and this Confirmation are payable at our office located at _____.

3. We hereby undertake to honor sight draft(s) drawn under and presented with the Letter of Credit and this Confirmation at our offices as specified herein.

4. [This paragraph is omitted if used as a bid guarantee, and subsequent paragraphs are renumbered.] It is a condition of this confirmation that it be deemed automatically extended without amendment for one year from the expiration date hereof, or any automatically extended expiration date, unless:

(a) At least 60 days prior to any such expiration date, we shall notify the Contracting Officer, or the transferee and the issuing financial institution, by registered mail or other receipted means of delivery, that we elect not to consider this confirmation extended for any such additional period; or

(b) The issuing financial institution shall have exercised its right to notify you or the transferee, the account party, and ourselves, of its election not to extend the expiration date of the Letter of Credit.

5. This confirmation is subject to the Uniform Customs and Practice (UCP) for Documentary Credits, 1993 Revision, International Chamber of Commerce Publication No. 500, and to the extent not inconsistent therewith, to the laws of _____ [state of confirming financial institution].

6. If this confirmation expires during an interruption of business of this financial institution as described in Article 17 of the UCP, we specifically agree to effect payment if this credit is drawn against within 30 days after the resumption of our business.

Sincerely,

[Confirming financial institution]

(g) The following format shall be used by the Contracting Officer for a sight draft to draw on the Letter of Credit:

SIGHT DRAFT

[City, State]

(Date)_____

[Name and address of financial institution]
Pay to the order of----------
[Beneficiary Agency] _____

the sum of United States $ _____
This draft is drawn under----------
Irrevocable Letter of Credit No.----------

[Beneficiary Agency]
By: _____

76. *FAR 52.228-15 PERFORMANCE AND PAYMENT BONDS (JULY 2000)

(a) *Definitions*. As used in this clause—

"Original contract price" means the award price of the contract; or, for requirements contracts, the price payable for the estimated total quantity; or, for indefinite-quantity contracts, the price payable for the specified minimum quantity. Original contract price does not include the price of any options, except those options exercised at the time of contract award.

(b) *Amount of required bonds*. Unless the resulting contract price is $100,000 or less, the successful offeror shall furnish performance and payment bonds to the Contracting Officer as follows:

(1) *Performance bonds (Standard Form 25).* The penal amount of performance bonds at the time of contract award shall be 100 percent of the original contract price.

(2) *Payment Bonds (Standard Form 25-A).* The penal amount of payment bonds at the time of contract award shall be 100 percent of the original contract price.

(3) *Additional bond protection*. (i) The Government may require additional performance and payment bond protection if the contract price is increased. The increase in protection generally will equal 100 percent of the increase in contract price.

(ii) The Government may secure the additional protection by directing the Contractor to increase the penal amount of the existing bond or to obtain an additional bond.

(c) *Furnishing executed bonds*. The Contractor shall furnish all executed bonds, including any necessary reinsurance agreements, to the Contracting Officer, within the time period specified in the Bid Guarantee provision of the solicitation, or otherwise specified by the Contracting Officer, but in any event, before starting work.

(d) *Surety or other security for bonds*. The bonds shall be in the form of firm commitment, supported by corporate sureties whose names appear on the list contained in Treasury Department Circular 570, individual sureties, or by other acceptable security such as postal money order, certified check, cashier's check, irrevocable letter of credit, or, in accordance with Treasury Department regulations, certain bonds or notes of the United States. Treasury Circular 570 is published in the Federal Register or may be obtained from the:

U.S. Department of Treasury
Financial Management Service
Surety Bond Branch
401 14th Street, NW, 2nd Floor, West Wing
Washington, DC 20227.

(e) *Notice of subcontractor waiver of protection (40 U.S.C. 270b(c).* Any waiver of the right to sue on the payment bond is void unless it is in writing, signed by the person whose right is waived, and executed after such person has first furnished labor or material for use in the performance of the contract.
(End of clause)

77. FAR 52.229-3 FEDERAL, STATE, AND LOCAL TAXES (APR 2003) [<u>For Contracts Exceeding $100,000</u>]

(a) As used in this clause--

"All applicable Federal, State, and local taxes and duties," means all taxes and duties, in effect on the contract date, that the taxing authority is imposing and collecting on the transactions or property covered by this contract.

"After-imposed Federal tax," means any new or increased Federal excise tax or duty, or tax that was exempted or excluded on the contract date but whose exemption was later revoked or reduced during the contract period, on the transactions or property covered by this contract that the Contractor is required to pay or bear as the

result of legislative, judicial, or administrative action taking effect after the contract date. It does not include social security tax or other employment taxes.

"After-relieved Federal tax," means any amount of Federal excise tax or duty, except social security or other employment taxes, that would otherwise have been payable on the transactions or property covered by this contract, but which the Contractor is not required to pay or bear, or for which the Contractor obtains a refund or drawback, as the result of legislative, judicial, or administrative action taking effect after the contract date.

"Contract date," means the date set for bid opening or, if this is a negotiated contract or a modification, the effective date of this contract or modification.

"*Local taxes"* includes taxes imposed by a possession or territory of the United States, Puerto Rico, or the Northern Mariana Islands, if the contract is performed wholly or partly in any of those areas.

(b) The contract price includes all applicable Federal, State, and local taxes and duties.

(c) The contract price shall be increased by the amount of any after-imposed Federal tax, provided the Contractor warrants in writing that no amount for such newly imposed Federal excise tax or duty or rate increase was included in the contract price, as a contingency reserve or otherwise.

(d) The contract price shall be decreased by the amount of any after-relieved Federal tax.

(e) The contract price shall be decreased by the amount of any Federal excise tax or duty, except social security or other employment taxes, that the Contractor is required to pay or bear, or does not obtain a refund of, through the Contractor's fault, negligence, or failure to follow instructions of the Contracting Officer.

(f) No adjustment shall be made in the contract price under this clause unless the amount of the adjustment exceeds $250.

(g) The Contractor shall promptly notify the Contracting Officer of all matters relating to any Federal excise tax or duty that reasonably may be expected to result in either an increase or decrease in the contract price and shall take appropriate action as the Contracting Officer directs.

(h) The Government shall, without liability, furnish evidence appropriate to establish exemption from any Federal, State, or local tax when the Contractor requests such evidence and a reasonable basis exists to sustain the exemption.

78. RESERVED

79. FAR 52.230-1 COST ACCOUNTING STANDARDS NOTICES AND CERTIFICATION (JUNE 2000)

Note: This notice does not apply to small businesses or foreign governments. This notice is in three parts, identified by Roman numerals I through III.

Offerors shall examine each part and provide the requested information in order to determine Cost Accounting Standards (CAS) requirements applicable to any resultant contract.

If the offeror is an educational institution, Part II does not apply unless the contemplated contract will be subject to full or modified CAS coverage pursuant to 48 CFR 9903.201-2(c)(5) or 9903.201-2(c)(6), respectively.

I. DISCLOSURE STATEMENT--COST ACCOUNTING PRACTICES AND CERTIFICATION

(a) Any contract in excess of $500,000 resulting from this solicitation will be subject to the requirements of the Cost Accounting Standards Board (48 CFR Chapter 99), except for those contracts which are exempt as specified in 48 CFR 9903.201-1.

(b) Any offeror submitting a proposal which, if accepted, will result in a contract subject to the requirements of 48 CFR Chapter 99 must, as a condition of contracting, submit a Disclosure Statement as required by 48 CFR 9903.202. When required, the Disclosure Statement must be submitted as a part of the offeror's proposal under this solicitation unless the offeror has already submitted a Disclosure Statement disclosing the practices used in connection with the pricing of this proposal. If an applicable Disclosure Statement has already been submitted, the offeror may satisfy the requirement for submission by providing the information requested in paragraph (c) of Part I of this provision.

CAUTION: In the absence of specific regulations or agreement, a practice disclosed in a Disclosure Statement shall not, by virtue of such disclosure, be deemed to be a proper, approved, or agreed-to practice for pricing proposals or accumulating and reporting contract performance cost data.

(c) Check the appropriate box below:

[ ] (1) Certificate of Concurrent Submission of Disclosure Statement

The offeror hereby certifies that, as a part of the offer, copies of the Disclosure Statement have been submitted as follows: (i) original and one copy to the cognizant Administrative Contracting Officer (ACO) or cognizant Federal agency official authorized to act in that capacity (Federal official), as applicable, and (ii) one copy to the cognizant Federal auditor.

(Disclosure must be on Form No. CASB DS-1 or CASB DS-2, as applicable. Forms may be obtained from the cognizant ACO or Federal official and/or from the loose-leaf version of the Federal Acquisition Regulation.)

Date of Disclosure Statement: _____

Name and Address of Cognizant ACO or Federal Official Where Filed:

_____

The offeror further certifies that the practices used in estimating costs in pricing this proposal are consistent with the cost accounting practices disclosed in the Disclosure Statement.

[ ] (2) Certificate of Previously Submitted Disclosure Statement.

The offeror hereby certifies that the required Disclosure Statement was filed as follows:

Date of Disclosure Statement: _____

Name and Address of Cognizant ACO or Federal Official Where Filed:

_____

The offeror further certifies that the practices used in estimating costs in pricing this proposal are consistent with the cost accounting practices disclosed in the applicable Disclosure Statement.

[ ] (3) Certificate of Monetary Exemption.

The offeror hereby certifies that the offeror, together with all divisions, subsidiaries, and affiliates under common control, did not receive net awards of negotiated prime contracts and subcontracts subject to CAS totaling $50 million or more in the cost accounting period immediately preceding the period in which this proposal was submitted. The offeror further certifies that if such status changes before an award resulting from this proposal, the offeror will advise the Contracting Officer immediately.

[ ] (4) Certificate of Interim Exemption.

The offeror hereby certifies that (i) the offeror first exceeded the monetary exemption for disclosure, as defined in (3) of this subsection, in the cost accounting period immediately preceding the period in which this offer was submitted and (ii) in accordance with 48 CFR 9903.202-1, the offeror is not yet required to submit a Disclosure Statement. The offeror further certifies that if an award resulting from this proposal has not been made within 90 days after the end of that period, the offeror will immediately submit a revised certificate to the Contracting Officer, in the form specified under subparagraph (c)(1) or (c)(2) of Part I of this provision, as appropriate, to verify submission of a completed Disclosure Statement.

CAUTION: Offerors currently required to disclose because they were awarded a CAS-covered prime contract or subcontract of $50 million or more in the current cost accounting period may not claim this exemption (4). Further, the exemption applies only in connection with proposals submitted before expiration of the 90-day period following the cost accounting period in which the monetary exemption was exceeded.

II. COST ACCOUNTING STANDARDS--ELIGIBILITY FOR MODIFIED CONTRACT COVERAGE

If the offeror is eligible to use the modified provisions of 48 CFR 9903.201-2(b) and elects to do so, the offeror shall indicate by checking the box below. Checking the box below shall mean that the resultant contract is subject to the Disclosure and Consistency of Cost Accounting Practices clause in lieu of the Cost Accounting Standards clause.

[ ] The offeror hereby claims an exemption from the Cost Accounting Standards clause under the provisions of 48 CFR 9903.201-2(b) and certifies that the offeror is eligible for use of the Disclosure and Consistency of Cost Accounting Practices clause because during the cost accounting period immediately preceding the period in which this proposal was submitted, the offeror received less than $50 million in awards of CAS-covered prime contracts and subcontracts. The offeror further certifies that if such status changes before an award resulting from this proposal, the offeror will advise the Contracting Officer immediately.

CAUTION: An offeror may not claim the above eligibility for modified contract coverage if this proposal is expected to result in the award of a CAS-covered contract of $50 million or more or if, during its current cost accounting period, the offeror has been awarded a single CAS-covered prime contract or subcontract of $50 million or more.

III. ADDITIONAL COST ACCOUNTING STANDARDS APPLICABLE TO EXISTING CONTRACTS

The offeror shall indicate below whether award of the contemplated contract would, in accordance with subparagraph (a)(3) of the Cost Accounting Standards clause, require a change in established cost accounting practices affecting existing contracts and subcontracts.

[ ] YES [ ] NO
(End of provision)

80. *FAR 52.230-2 COST ACCOUNTING STANDARDS (APR 1998)

(a) Unless the contract is exempt under 48 CFR 9903.201-1 and 9903.201-2, the provisions of 48 CFR Part 9903 are incorporated herein by reference and the Contractor, in connection with this contract, shall--

(1) (CAS-covered Contracts Only) By submission of a Disclosure Statement, disclose in writing the Contractor's cost accounting practices as required by 48 CFR 9903.202-1 through 9903.202-5, including methods of distinguishing direct costs from indirect costs and the basis used for allocating indirect costs. The practices disclosed for this contract shall be the same as the practices currently disclosed and applied on all other contracts and subcontracts being performed by the Contractor and which contain a Cost Accounting Standards (CAS) clause. If the Contractor has notified the Contracting Officer that the Disclosure Statement contains trade secrets and commercial or financial information which is privileged and confidential, the Disclosure Statement shall be protected and shall not be released outside of the Government.

(2) Follow consistently the Contractor's cost accounting practices in accumulating and reporting contract performance cost data concerning this contract. If any change in cost accounting practices is made for the purposes of any contract or subcontract subject to CAS requirements, the change must be applied prospectively to this contract and the Disclosure Statement must be amended accordingly. If the contract price or cost allowance of this contract is affected by such changes, adjustment shall be made in accordance with subparagraph (a)(4) or (a)(5) of this clause, as appropriate.

(3) Comply with all CAS, including any modifications and interpretations indicated thereto contained in 48 CFR Part 9904, in effect on the date of award of this contract or, if the Contractor has submitted cost or pricing data, on the date of final agreement on price as shown on the Contractor's signed certificate of current cost or pricing data. The Contractor shall also comply with any CAS (or modifications to CAS) which hereafter become applicable to a contract or subcontract of the Contractor. Such compliance shall be required prospectively from the date of applicability to such contract or subcontract.

(4)(i) Agree to an equitable adjustment as provided in the Changes clause of this contract if the contract cost is affected by a change which, pursuant to subparagraph (a)(3) of this clause, the Contractor is required to make to the Contractor's established cost accounting practices.

(ii) Negotiate with the Contracting Officer to determine the terms and conditions under which a change may be made to a cost accounting practice, other than a change made under other provisions of subparagraph (a)(4) of this clause; provided that no agreement may be made under this provision that will increase costs paid by the United States.

(iii) When the parties agree to a change to a cost accounting practice, other than a change under subdivision (a)(4)(i) of this clause, negotiate an equitable adjustment as provided in the Changes clause of this contract.

(5) Agree to an adjustment of the contract price or cost allowance, as appropriate, if the Contractor or a subcontractor fails to comply with an applicable Cost Accounting Standard, or to follow any cost accounting practice consistently and such failure results in any increased costs paid by the United States. Such adjustment shall provide for recovery of the increased costs to the United States, together with interest thereon computed at the annual rate established under section 6621 of the Internal Revenue Code of 1986 (26 U.S.C. 6621) for such period, from the time the payment by the United States was made to the time the adjustment is effected. In no case shall the Government recover costs greater than the increased cost to the Government, in the aggregate, on the relevant contracts subject to the price adjustment, unless the Contractor made a change in its cost accounting practices of which it was aware or should have been aware at the time of price negotiations and which it failed to disclose to the Government.

(b) If the parties fail to agree whether the Contractor or a subcontractor has complied with an applicable CAS in 48 CFR 9904 or a CAS rule or regulation in 48 CFR 9903 and as to any cost adjustment demanded by the United States, such failure to agree will constitute a dispute under the Contract Disputes Act (41 U.S.C. 601).

(c) The Contractor shall permit any authorized representatives of the Government to examine and make copies of any documents, papers, or records relating to compliance with the requirements of this clause.

(d) The Contractor shall include in all negotiated subcontracts which the Contractor enters into, the substance of this clause, except paragraph (b), and shall require such inclusion in all other subcontracts, of any tier, including the obligation to comply with all CAS in effect on the subcontractor's award date or if the subcontractor has submitted cost or pricing data, on the date of final agreement on price as shown on the subcontractor's signed Certificate of Current Cost or Pricing Data. If the subcontract is awarded to a business unit which pursuant to 48 CFR 9903.201-2 is subject to other types of CAS coverage, the substance of the applicable clause set forth in subsection 30.201-4 of the Federal Acquisition Regulation shall be inserted. This requirement shall apply only to negotiated subcontracts in excess of $500,000, except that the requirement shall not apply to negotiated subcontracts otherwise exempt from the requirement to include a CAS clause as specified in 48 CFR 9903.201-1.

(End of clause)

81. *FAR 52.230-3 DISCLOSURE AND CONSISTENCY OF COST ACCOUNTING PRACTICES (APR 1998)

(a) The Contractor, in connection with this contract, shall--

(1) Comply with the requirements of 48 CFR 9904.401, Consistency in Estimating, Accumulating, and Reporting Costs; 48 CFR 9904.402, Consistency in Allocating Costs Incurred for the Same Purpose; 48 CFR 9904.405, Accounting for Unallowable Costs; and 48 CFR 9904.406, Cost Accounting Standard--Cost Accounting Period, in effect on the date of award of this contract as indicated in 48 CFR Part 9904.

(2) (CAS-covered Contracts Only) If it is a business unit of a company required to submit a Disclosure Statement, disclose in writing its cost accounting practices as required by 48 CFR 9903.202-1 through 9903.202-5. If the Contractor has notified the Contracting Officer that the Disclosure Statement contains trade secrets and commercial or financial information which is privileged and confidential, the Disclosure Statement shall be protected and shall not be released outside of the Government.

(3)(i) Follow consistently the Contractor's cost accounting practices. A change to such practices may be proposed, however, by either the Government or the Contractor, and the Contractor agrees to negotiate with the Contracting Officer the terms and conditions under which a change may be made. After the terms and conditions under which the change is to be made have been agreed to, the change must be applied prospectively to this contract, and the Disclosure Statement, if affected, must be amended accordingly.

(ii) The Contractor shall, when the parties agree to a change to a cost accounting practice and the Contracting Officer has made the finding required in 48 CFR 9903.201-6(b), that the change is desirable and not detrimental to the interests of the Government, negotiate an equitable adjustment as provided in the Changes clause of this contract. In the absence of the required finding, no agreement may be made under this contract clause that will increase costs paid by the United States.

(4) Agree to an adjustment of the contract price or cost allowance, as appropriate, if the Contractor or a subcontractor fails to comply with the applicable CAS or to follow any cost accounting practice, and such failure results in any increased costs paid by the United States. Such adjustment shall provide for recovery of the increased costs to the United States together with interest thereon computed at the annual rate of interest established under the Internal Revenue Code of 1986 (26 U.S.C. 6621), from the time the payment by the United States was made to the time the adjustment is effected.

(b) If the parties fail to agree whether the Contractor has complied with an applicable CAS, rule, or regulation as specified in 48 CFR 9903 and 9904 and as to any cost adjustment demanded by the United States, such failure to agree will constitute a dispute under the Contract Disputes Act (41 U.S.C. 601).

(c) The Contractor shall permit any authorized representatives of the Government to examine and make copies of any documents, papers, and records relating to compliance with the requirements of this clause.

(d) The Contractor shall include in all negotiated subcontracts, which the Contractor enters into, the substance of this clause, except paragraph (b), and shall require such inclusion in all other subcontracts of any tier, except that--

(1) If the subcontract is awarded to a business unit which pursuant to 48 CFR 9903.201-2 is subject to other types of CAS coverage, the substance of the applicable clause set forth in subsection 30.201-4 of the Federal Acquisition Regulation shall be inserted.

(2) This requirement shall apply only to negotiated subcontracts in excess of $500,000.

(3) The requirement shall not apply to negotiated subcontracts otherwise exempt from the requirement to include a CAS clause as specified in 48 CFR 9903.201-1.

(End of clause)

82. DFARS 252.231-7000 SUPPLEMENTAL COST PRINCIPLES (DEC 1991)

When the allowability of costs under this contract is determined in accordance with part 31 of the Federal Acquisition Regulation (FAR) allowability shall also be determined in accordance with part 231 of the DoD FAR Supplement, in effect on the date of this contract.

83. *FAR 52.232-5 PAYMENTS UNDER FIXED-PRICE CONSTRUCTION CONTRACTS (SEPT 2002)

(a) Payment of Price. The Government shall pay the Contractor the contract price as provided in this contract.

(b) Progress Payments. The Government shall make progress payments monthly as the work proceeds, or at more frequent intervals as determined by the Contracting Officer, on estimates of work accomplished which meets the standards of quality established under the contract, as approved by the Contracting Officer.

(1) The Contractor's request for progress payments shall include the following substantiation:

(i) An itemization of the amounts requested, related to the various elements of work required by the contract covered by the payment requested.

(ii) A listing of the amount included for work performed by each subcontractor under the contract.

(iii) A listing of the total amount of each subcontract under the contract.

(iv) A listing of the amounts previously paid to each such subcontractor under the contract.

(v) Additional supporting data in a form and detail required by the Contracting Officer.

(2) In the preparation of estimates, the Contracting Officer may authorize material delivered on the site and preparatory work done to be taken into consideration. Material delivered to the Contractor at locations other than the site also may be taken into consideration if--

(i) Consideration is specifically authorized by this contract; and

(ii) The Contractor furnishes satisfactory evidence that it has acquired title to such material and that the material will be used to perform this contract.

(c) Contractor Certification. Along with each request for progress payments, the Contractor shall furnish the following certification, or payment shall not be made: (However, if the Contractor elects to delete paragraph (c)(4) from the certification, the certification is still acceptable.) I hereby certify, to the best of my knowledge and belief, that--

(1) The amounts requested are only for performance in accordance with the specifications, terms, and conditions of the contract;

(2) All payments due to subcontractors and suppliers from previous payments received under the contract have been made, and timely payments will be made from the proceeds of the payment covered by this certification, in accordance with subcontract agreements and the requirements of chapter 39 of Title 31, United States Code;

(3) This request for progress payments does not include any amounts which the prime contractor intends to withhold or retain from a subcontractor or supplier in accordance with the terms and conditions of the subcontract; and

(4) This certification is not to be construed as final acceptance of a subcontractor's performance.

(Name)

(Title)

(Date)

(d) Refund of Unearned Amounts. If the Contractor, after making a certified request for progress payments, discovers that a portion or all of such request constitutes a payment for performance by the Contractor that fails to conform to the specifications, terms, and conditions of this contract (hereinafter referred to as the "unearned amount"), the Contractor shall--

(1) Notify the Contracting Officer of such performance deficiency; and

(2) Be obligated to pay the Government an amount (computed by the Contracting Officer in the manner provided in paragraph (j) of this clause) equal to interest on the unearned amount from the 8th day after the date of receipt of the unearned amount until--

(i) The date the Contractor notifies the Contracting Officer that the performance deficiency has been corrected; or

(ii) The date the Contractor reduces the amount of any subsequent certified request for progress payments by an amount equal to the unearned amount.

(e) Retainage. If the Contracting Officer finds that satisfactory progress was achieved during any period for which a progress payment is to be made, the Contracting Officer shall authorize payment to be made in full. However, if satisfactory progress has not been made, the Contracting Officer may retain a maximum of 10 percent of the amount of the payment until satisfactory progress is achieved. When the work is substantially complete, the Contracting Officer may retain from previously withheld funds and future progress payments that amount the Contracting Officer considers adequate for protection of the Government and shall release to the Contractor all the remaining withheld funds. Also, on completion and acceptance of each separate building, public

work, or other division of the contract, for which the price is stated separately in the contract, payment shall be made for the completed work without retention of a percentage.

(f) Title, Liability, and Reservation of Rights. All material and work covered by progress payments made shall, at the time of payment, become the sole property of the Government, but this shall not be construed as--

(1) Relieving the Contractor from the sole responsibility for al material and work upon which payments have been made or the restoration of any damaged work; or

(2) Waiving the right of the Government to require the fulfillment of all of the terms of the contract.

(g) Reimbursement for Bond Premiums. In making these progress payments, the Government shall, upon request, reimburse the Contractor for the amount of premiums paid for performance and payment bonds (including coinsurance and reinsurance agreements, when applicable) after the Contractor has furnished evidence of full payment to the surety. The retainage provisions in paragraph (e) of this clause shall not apply to that portion of progress payments attributable to bond premiums.

(h) Final Payment. The Government shall pay the amount due the Contractor under this contract after--

(1) Completion and acceptance of all work;

(2) Presentation of a properly executed voucher; and

(3) Presentation of release of all claims against the Government arising by virtue of this contract, other than claims, in stated amounts, that the Contractor has specifically excepted from the operation of the release. A release may also be required of the assignee if the Contractor's claim to amounts payable under this contract has been assigned under the Assignment of Claims Act of 1940 (31 U.S.C. 3727 and 41 U.S.C. 15).

(i) Limitation Because of Undefinitized Work. Notwithstanding any provision of this contract, progress payments shall not exceed 80 percent on work accomplished on undefinitized contract actions. A "contract action" is any action resulting in a contract, as defined in FAR Subpart 2.1, including contract modifications for additional supplies or services, but not including contract modifications that are within the scope and under the terms of the contract, such as contract modifications issued pursuant to the Changes clause, or funding and other administrative changes.

(j) Interest Computation on Unearned Amounts. In accordance with 31 U.S.C. 3903(c)(1), the amount payable under subparagraph (d)(2) of this clause shall be--

(1) Computed at the rate of average bond equivalent rates of 91-day Treasury bills auctioned at the most recent auction of such bills prior to the date the Contractor receives the unearned amount; and

(2) Deducted from the next available payment to the Contractor.

84. RESERVED.

85. *FAR 52.232-10 PAYMENTS UNDER FIXED-PRICE ARCHITECT-ENGINEER CONTRACTS (AUG 1987)

(a) Estimates shall be made monthly of the amount and value of the work and services performed by the Contractor under this contract which meet the standards of quality established under this contract. The estimates shall be prepared by the Contractor and accompanied by any supporting data required by the Contracting Officer.

(b) Upon approval of the estimate by the Contracting Officer, payment upon properly executed vouchers shall be made to the Contractor, as soon as practicable, of 90 percent of the approved amount, less all previous payments; provided, that payment may be made in full during any months in which the Contracting Officer determines that performance has been satisfactory. Also, whenever the Contracting Officer determines that the work is substantially complete and that the amount retained is in excess of the amount adequate for the protection of the Government, the Contracting Officer may release the excess amount to the Contractor.

(c) Upon satisfactory completion by the Contractor and acceptance by the Contracting Officer of the work done by the Contractor under the "Statement of Architect-Engineer Services", the Contractor will be paid the unpaid balance of any money due for work under the statement, including retained percentages relating to this portion of the work. Upon satisfactory completion and final acceptance of the construction work, the Contractor shall be paid any unpaid balance of money due under this contract.

(d) Before final payment under the contract, or before settlement upon termination of the contract, and as a condition precedent thereto, the Contractor shall execute and deliver to the Contracting Officer a release of all claims against the Government arising under or by virtue of this contract, other than any claims that are specifically excepted by the Contractor from the operation of the release in amounts stated in the release.

(e) Notwithstanding any other provision in this contract, and specifically paragraph (b) of this clause, progress payments shall not exceed 80 percent on work accomplished on undefinitized contract actions. A "contract action" is any action resulting in a contract, as defined in FAR Subpart 2.1, including contract modifications for additional supplies or services, but not including contract modifications that are within the scope and under the terms of the contract, such as contract modifications issued pursuant to the Changes clause, or funding and other administrative changes. (End of clause)

86. *FAR 52.232-17 INTEREST (JUN 1996)

(a) Except as otherwise provided in this contract under a Price Reduction for Defective Cost or Pricing Data clause or a Cost Accounting Standards clause, all amounts that become payable by the Contractor to the Government under this contract (net of any applicable tax credit under the Internal Revenue Code (26 U.S.C. 1481)) shall bear simple interest from the date due until paid unless paid within 30 days of becoming due. The interest rate shall be the interest rate established by the Secretary of the Treasury as provided in Section 12 of the Contract Disputes Act of 1978 (Public Law 95-563), which is applicable to the period in which the amount becomes due, as provided in paragraph (b) of this clause, and then at the rate applicable for each six-month period as fixed by the Secretary until the amount is paid.

(b) Amounts shall be due at the earliest of the following dates:

(1) The date fixed under this contract.

(2) The date of the first written demand for payment consistent with this contract, including any demand resulting from a default termination.

(3) The date the Government transmits to the Contractor a proposed supplemental agreement to confirm completed negotiations establishing the amount of debt.

(4) If this contract provides for revision of prices, the date of written notice to the Contractor stating the amount of refund payable in connection with a pricing proposal or a negotiated pricing agreement not confirmed by contract modification.

(c) The interest charge made under this clause may be reduced under the procedures prescribed in 32.614-2 of the Federal Acquisition Regulation in effect on the date of this contract.

87. *FAR 52.232-23 ASSIGNMENT OF CLAIMS (JAN 1986)

(a) The Contractor, under the Assignment of Claims Act, as amended, 31 U.S.C. 3727, 41 U.S.C. 15 (hereafter referred to as "the Act"), may assign its rights to be paid amounts due or to become due as a result of the performance of this contract to a bank, trust company, or other financing institution, including any Federal lending agency. The assignee under such an assignment may thereafter further assign or reassign its right under the original assignment to any type of financing institution described in the preceding sentence.

(b) Any assignment or reassignment authorized under the Act and this clause shall cover all unpaid amounts payable under this contract, and shall not be made to more than one party, except that an assignment or reassignment may be made to one party as agent or trustee for two or more parties participating in the financing of this contract.

(c) The Contractor shall not furnish or disclose to any assignee under this contract any classified document (including this contract) or information related to work under this contract until the Contracting Officer authorizes such action in writing.

88. *FAR 52.232-26 PROMPT PAYMENT FOR FIXED-PRICE ARCHITECT-ENGINEER CONTRACTS (FEB 2002)

Notwithstanding any other payment terms in this contract, the Government will make invoice payments under the terms and conditions specified in this clause. The Government considers payment as being made on the day a check is dated or the date of an electronic funds transfer. Definitions of pertinent terms are set forth in sections 2.101, 32.001, and 32.902 of the Federal Acquisition Regulation. All days referred to in this clause are calendar days, unless otherwise specified. (However, see paragraph (a)(3) of this clause concerning payments due on Saturdays, Sundays, and legal holidays.)

(a) *Invoice payments*—(1) *Due date.* The due date for making invoice payments is—

(i) For work or services completed by the Contractor, the later of the following two events:

(A) The 30th day after the designated billing office receives a proper invoice from the Contractor (except as provided in paragraph (a)(1)(iii) of this clause).

(B) The 30th day after Government acceptance of the work or services completed by the Contractor. For a final invoice, when the payment amount is subject to contract settlement actions (*e.g.,* release of claims), acceptance is deemed to occur on the effective date of the settlement.

(ii) The due date for progress payments is the 30th day after Government approval of Contractor estimates of work or services accomplished.

(iii) If the designated billing office fails to annotate the invoice or payment request with the actual date of receipt at the time of receipt, the payment due date is the 30th day after the date of the Contractor's invoice or payment request, provided the designated billing office receives a proper invoice or payment request and there is no disagreement over quantity, quality, or Contractor compliance with contract requirements.

(2) *Contractor's invoice.* The Contractor shall prepare and submit invoices to the designated billing office specified in the contract. A proper invoice must include the items listed in paragraphs (a)(2)(i) through (a)(2)(x) of this clause. If the invoice does not comply with these requirements, the designated billing office will return it within 7 days after receipt, with the reasons why it is not a proper invoice. When computing any interest penalty owed the Contractor, the Government will take into account if the Government notifies the Contractor of an improper invoice in an untimely manner.

(i) Name and address of the Contractor.

(ii) Invoice date and invoice number. (The Contractor should date invoices as close as possible to the date of mailing or transmission.)

(iii) Contract number or other authorization for work or services performed (including order number and contract line item number).

(iv) Description of work or services performed.

(v) Delivery and payment terms (*e.g.,* discount for prompt payment terms).

(vi) Name and address of Contractor official to whom payment is to be sent (must be the same as that in the contract or in a proper notice of assignment).

(vii) Name (where practicable), title, phone number, and mailing address of person to notify in the event of a defective invoice.

(viii) Taxpayer Identification Number (TIN). The Contractor shall include its TIN on the invoice only if required elsewhere in this contract.

(ix) Electronic funds transfer (EFT) banking information.

(A) The Contractor shall include EFT banking information on the invoice only if required elsewhere in this contract.

(B) If EFT banking information is not required to be on the invoice, in order for the invoice to be a proper invoice, the Contractor shall have submitted correct EFT banking information in accordance with the applicable solicitation provision (*e.g.,* 52.232–38, Submission of Electronic Funds Transfer Information with Offer), contract clause (*e.g.,* 52.232–33, Payment by Electronic Funds Transfer—Central Contractor Registration, or 52.232–34, Payment by Electronic Funds Transfer—Other Than Central Contractor Registration), or applicable agency procedures.

(C) EFT banking information is not required if the Government waived the requirement to pay by EFT.

(x) Any other information or documentation required by the contract.

(3) *Interest penalty.* The designated payment office will pay an interest penalty automatically, without request from the Contractor, if payment is not made by the due date and the conditions listed in paragraphs (a)(3)(i) through (a)(3)(iii) of this clause are met, if applicable. However, when the due date falls on a Saturday, Sunday, or legal holiday, the designated payment office may make payment on the following working day without incurring a late payment interest penalty.

(i) The designated billing office received a proper invoice.

(ii) The Government processed a receiving report or other Government documentation authorizing payment and there was no disagreement over quantity, quality,
Contractor compliance with any contract term or condition, or requested progress payment amount.

(iii) In the case of a final invoice for any balance of funds due the Contractor for work or services performed, the amount was not subject to further contract settlement actions between the Government and the Contractor.

(4) *Computing penalty amount.* The Government will compute the interest penalty in accordance with the Office of Management and Budget prompt payment regulations at 5 CFR part 1315.

(i) For the sole purpose of computing an interest penalty that might be due the Contractor, Government acceptance or approval is deemed to occur constructively as shown in paragraphs (a)(4)(i)(A) and (B) of this clause. If actual acceptance or approval occurs within the constructive acceptance or approval period, the Government will base the determination of an interest penalty on the actual date of acceptance or approval. Constructive acceptance or constructive approval requirements do not apply if there is a disagreement over quantity, quality, Contractor compliance with a contract provision, or requested progress payment amounts. These requirements also do not compel Government officials to accept work or services, approve Contractor estimates, perform contract administration functions, or make payment prior to fulfilling their responsibilities.

(A) For work or services completed by the Contractor, Government acceptance is deemed to occur constructively on the 7th day after the Contractor completes the work or services in accordance with the terms and conditions of the contract.

(B) For progress payments, Government approval is deemed to occur on the 7th day after the designated billing office receives the Contractor estimates.

(ii) The prompt payment regulations at 5 CFR 1315.10(c) do not require the Government to pay interest penalties if payment delays are due to disagreement between the Government and the Contractor over the payment amount or other issues involving contract compliance, or on amounts temporarily withheld or retained in accordance with the terms of the contract. The Government and the Contractor shall resolve claims involving disputes, and any interest that may be payable in accordance with the clause at FAR 52.233–1, Disputes.

(5) *Discounts for prompt payment.* The designated payment office will pay an interest penalty automatically, without request from the Contractor, if the Government takes a discount for prompt payment improperly. The Government will calculate the interest penalty in accordance with 5 CFR part 1315.

(6) *Additional interest penalty*

(i) The designated payment office will pay a penalty amount, calculated in accordance with the prompt payment regulations at 5 CFR part 1315, in addition to the interest penalty
amount only if—

(A) The Government owes an interest penalty of $1 or more;

(B) The designated payment office does not pay the interest penalty within 10 days after the date the invoice amount is paid; and

(C) The contractor makes a written demand to the designated payment office for additional penalty payment, in accordance with paragraph (a)(6)(ii) of this clause, postmarked not later than 40 days after the date the invoice amount is paid.

(ii)(A) The Contractor shall support written demands for additional penalty payments with the following data. The Government will not request any additional data. The Contractor shall—

(*1*) Specifically assert that late payment interest is due under a specific invoice, and request payment of all overdue late payment interest penalty and such additional penalty as may be required;

(*2*) Attach a copy of the invoice on which the unpaid late payment interest is due; and

(*3*) State that payment of the principal has been received, including the date of receipt.

(B) If there is no postmark or the postmark is illegible—

(*1*) The designated payment office that receives the demand will annotate it with the date of receipt, provided the demand is received on or before the 40th day after payment was made; or

(*2*) If the designated payment office fails to make the required annotation, the Government will determine the demand's validity based on the date the Contractor has placed on the demand, provided such date is no later than the 40th day after payment was made.

(iii) The additional penalty does not apply to payments regulated by other Government regulations (*e.g.,* payments under utility contracts subject to tariffs and regulation).

(b) *Contract financing payments.* If this contract provides for contract financing, the Government will make contract financing payments in accordance with the applicable contract financing clause.

(c) *Overpayments.* If the Contractor becomes aware of a duplicate payment or that the Government has otherwise overpaid on an invoice payment, the Contractor shall immediately notify the Contracting Officer and request instructions for disposition of the overpayment. (End of clause)

89. *FAR 52.232-27 PROMPT PAY FOR CONSTRUCTION CONTRACTS (FEB 2002)

Notwithstanding any other payment terms in this contract, the Government will make invoice payments under the terms and conditions specified in this clause. The Government considers payment as being made on the day a check is dated or the date of an electronic funds transfer. Definitions of pertinent terms are set forth in sections 2.101, 32.001, and 32.902 of the Federal Acquisition Regulation. All days referred to in this clause are calendar days, unless otherwise specified. (However, see paragraph (a)(3) concerning payments due on Saturdays, Sundays, and legal holidays.)

(a) *Invoice payments*—(1) *Types of invoice payments.* For purposes of this clause, there are several types of invoice payments that may occur under this contract, as follows:

(i) Progress payments, if provided for elsewhere in this contract, based on Contracting Officer approval of the estimated amount and value of work or services performed, including payments for reaching milestones in any project.

(A) The due date for making such payments is 14 days after the designated billing office receives a proper payment request. If the designated billing office fails to annotate the payment request with the actual date of receipt at the time of receipt, the payment due date is the 14th day after the date of the Contractor's payment request, provided the designated billing office receives a proper payment request and there is no disagreement over quantity, quality, or Contractor compliance with contract requirements.

(B) The due date for payment of any amounts retained by the Contracting Officer in accordance with the clause at 52.232–5, Payments Under Fixed-Price Construction Contracts, is as specified in the contract or, if not specified, 30 days after approval by the Contracting Officer for release to the Contractor.

(ii) Final payments based on completion and acceptance of all work and presentation of release of all claims against the Government arising by virtue of the contract, and payments for partial deliveries that have been accepted by the Government (*e.g.,* each separate building, public work, or other division of the contract for which the price is stated separately in the contract).

(A) The due date for making such payments is the later of the following two events:

(*1*) The 30th day after the designated billing office receives a proper invoice from the Contractor.

(*2*) The 30th day after Government acceptance of the work or services completed by the Contractor. For a final invoice when the payment amount is subject to contract settlement actions (*e.g.,* release of claims), acceptance is deemed to occur on the effective date of the contract settlement.

(B) If the designated billing office fails to annotate the invoice with the date of actual receipt at the time of receipt, the invoice payment due date is the 30th day after the date of the Contractor's

invoice, provided the designated billing office receives a proper invoice and there is no disagreement over quantity, quality, or Contractor compliance with contract requirements.

(2) *Contractor's invoice.* The Contractor shall prepare and submit invoices to the designated billing office specified in the contract. A proper invoice must include the items listed in paragraphs (a)(2)(i) through (a)(2)(xi) of this clause. If the invoice does not comply with these requirements, the designated billing office must return it within 7 days after receipt, with the reasons why it is not a proper invoice. When computing any interest penalty owed the Contractor, the Government will take into account if the Government notifies the Contractor of an improper invoice in an untimely manner.

(i) Name and address of the Contractor.

(ii) Invoice date and invoice number. (The Contractor should date invoices as close as possible to the date of mailing or transmission.)

(iii) Contract number or other authorization for work or services performed (including order number and contract line item number).

(iv) Description of work or services performed.

(v) Delivery and payment terms (*e.g.,* discount for prompt payment terms).

(vi) Name and address of Contractor official to whom payment is to be sent (must be the same as that in the contract or in a proper notice of assignment).

(vii) Name (where practicable), title, phone number, and mailing address of person to notify in the event of a defective invoice.

(viii) For payments described in paragraph (a)(1)(i) of this clause, substantiation of the amounts requested and certification in accordance with the requirements of the clause at 52.232–5, Payments Under Fixed-Price Construction Contracts.

(ix) Taxpayer Identification Number (TIN). The Contractor shall include its TIN on the invoice only if required elsewhere in this contract.

(x) Electronic funds transfer (EFT) banking information.

(A) The Contractor shall include EFTbanking information on the invoice only if required elsewhere in this contract.

(B) If EFT banking information is not required to be on the invoice, in order for the invoice to be a proper invoice, the Contractor shall have submitted correct EFT banking information in accordance with the applicable solicitation provision (*e.g.,* 52.232–38, Submission of Electronic Funds Transfer Information with Offer), contract clause (*e.g.,* 52.232–33, Payment by Electronic Funds Transfer—Central Contractor Registration, or 52.232–34, Payment by Electronic Funds Transfer—Other Than Central Contractor Registration), or applicable agency procedures.

(C) EFT banking information is not required if the Government waived the requirement to pay by EFT.

(xi) Any other information or documentation required by the contract.

(3) *Interest penalty.* The designated payment office will pay an interest penalty automatically, without request from the Contractor, if payment is not made by the due date and the conditions listed in paragraphs (a)(3)(i) through (a)(3)(iii) of this clause are met, if applicable. However, when the due date falls on a Saturday, Sunday, or legal holiday, the designated payment office may make payment on the following working day without incurring a late payment interest penalty.

(i) The designated billing office received a proper invoice.

(ii) The Government processed a receiving report or other Government documentation authorizing payment and there was no disagreement over quantity, quality, Contractor compliance with any contract term or condition, or requested progress payment amount.

(iii) In the case of a final invoice for any balance of funds due the Contractor for work or services performed, the amount was not subject to further contract settlement actions between the Government and the Contractor.

(4) *Computing penalty amount.* The Government will compute the interest penalty in accordance with the Office of Management and Budget prompt payment regulations at 5 CFR part 1315.

(i) For the sole purpose of computing an interest penalty that might be due the Contractor for payments described in paragraph (a)(1)(ii) of this clause, Government acceptance or approval is deemed to occur constructively on the 7th day after the Contractor has completed the work or services in accordance with the terms and conditions of the contract. If actual acceptance or approval occurs within the constructive

acceptance or approval period, the Government will base the determination of an interest penalty on the actual date of acceptance or approval. Constructive acceptance or constructive approval requirements do not apply if there is a disagreement over quantity, quality, or Contractor compliance with a contract provision. These requirements also do not compel Government officials to accept work or services, approve Contractor estimates, perform contract administration functions, or make payment prior to fulfilling their responsibilities.

(ii) The prompt payment regulations at 5 CFR 1315.10(c) do not require the Government to pay interest penalties if payment delays are due to disagreement between the Government and the Contractor over the payment amount or other issues involving contract compliance, or on amounts temporarily withheld or retained in accordance with the terms of the contract. The Government and the Contractor shall resolve claims involving disputes, and any interest that may be payable in accordance with the clause at FAR 52.233–1, Disputes.

(5) *Discounts for prompt payment.* The designated payment office will pay an interest penalty automatically, without request from the Contractor, if the Government takes a discount for prompt payment improperly. The Government will calculate the interest penalty in accordance with the prompt payment regulations at 5 CFR part 1315.

(6) *Additional interest penalty.* (i) The designated payment office will pay a penalty amount, calculated in accordance with the prompt payment regulations at 5 CFR part 1315 in addition to the interest penalty amount only if—

(A) The Government owes an interest penalty of $1 or more;

(B) The designated payment office does not pay the interest penalty within 10 days after the date the invoice amount is paid; and

(C) The Contractor makes a written demand to the designated payment office for additional penalty payment, in accordance with paragraph (a)(6)(ii) of this clause, postmarked not later than 40 days after the date the invoice amount is paid.

(ii)(A) The Contractor shall support written demands for additional penalty payments with the following data. The Government will not request any additional data. The Contractor shall—

(*1*) Specifically assert that late payment interest is due under a specific invoice, and request payment of all overdue late payment interest penalty and such additional penalty as may be required;

(*2*) Attach a copy of the invoice on which the unpaid late payment interest was due; and

(*3*) State that payment of the principal has been received, including the date of receipt.

(B) If there is no postmark or the postmark is illegible—

(1) The designated payment office that receives the demand will annotate it with the date of receipt provided the demand is received on or before the 40th day after payment was made; or

(*2*) If the designated payment office fails to make the required annotation, the Government will determine the demand's validity based on the date the Contractor has placed on the demand, provided such date is no later than the 40th day after payment was made.

(b) *Contract financing payments.* If this contract provides for contract financing, the Government will make contract financing payments in accordance with the applicable contract financing clause.

(c) *Subcontract clause requirements.* The Contractor shall include in each subcontract for property or services (including a material supplier) for the purpose of performing this contract the following:

(1) *Prompt payment for subcontractors.* A payment clause that obligates the Contractor to pay the subcontractor for satisfactory performance under its subcontract not later than 7 days from receipt of payment out of such amounts as are paid to the Contractor under this contract.

(2) *Interest for subcontractors.* An interest penalty clause that obligates the Contractor to pay to the subcontractor an interest penalty for each payment not made in accordance with the payment clause—

(i) For the period beginning on the day after the required payment date and ending on the date on which payment of the amount due is made; and

(ii) Computed at the rate of interest established by the Secretary of the Treasury, and published in the **Federal Register,** for interest payments under section 12 of the Contract Disputes Act of 1978 (41 U.S.C. 611) in effect at the time the Contractor accrues the obligation to pay an interest penalty.

(3) *Subcontractor clause flowdown.* A clause requiring each subcontractor to

(i) Include a payment clause and an interest penalty clause conforming to the standards set forth in paragraphs (c)(1) and (c)(2) of this clause in each of its subcontracts; and

(ii) Require each of its subcontractors to include such clauses in their subcontracts with each lower-tier subcontractor or supplier.

(d) *Subcontract clause interpretation.* The clauses required by paragraph (c) of this clause shall not be construed to impair the right of the Contractor or a subcontractor at any tier to negotiate, and to include in their subcontract, provisions that—

(1) *Retainage permitted.* Permit the Contractor or a subcontractor to retain (without cause) a specified percentage of each progress payment otherwise due to a subcontractor for satisfactory performance under the subcontract without incurring any obligation to pay a late payment interest penalty, in accordance with terms and conditions agreed to by the parties to the subcontract, giving such recognition as the parties deem appropriate to the ability of a subcontractor to furnish a performance bond and a payment bond;

(2) *Withholding permitted.* Permit the Contractor or subcontractor to make a determination that part or all of the subcontractor's request for payment may be withheld in accordance with the subcontract agreement; and

(3) *Withholding requirements.* Permit such withholding without incurring any obligation to pay a late payment penalty if—

(i) A notice conforming to the standards of paragraph (g) of this clause previously has been furnished to the subcontractor; and

(ii) The Contractor furnishes to the Contracting Officer a copy of any notice issued by a Contractor pursuant to paragraph (d)(3)(i) of this clause.

(e) *Subcontractor withholding procedures.* If a Contractor, after making a request for payment to the Government but before making a payment to a subcontractor for the subcontractor's performance covered by the payment request, discovers that all or a portion of the payment otherwise due such subcontractor is subject to withholding from the subcontractor in accordance with the subcontract agreement, then the Contractor shall—

(1) *Subcontractor notice.* Furnish to the subcontractor a notice conforming to the standards of paragraph (g) of this clause as soon as practicable upon ascertaining the cause giving rise to a withholding, but prior to the due date for subcontractor payment;

(2) *Contracting Officer notice.* Furnish to the Contracting Officer, as soon as practicable, a copy of the notice furnished to the subcontractor pursuant to paragraph (e)(1) of this clause;

(3) *Subcontractor progress payment reduction.* Reduce the subcontractor's progress payment by an amount not to exceed the amount specified in the notice of withholding furnished under paragraph (e)(1) of this clause;

(4) *Subsequent subcontractor payment.* Pay the subcontractor as soon as practicable after the correction of the identified subcontract performance deficiency, and—

(i) Make such payment within—

(A) Seven days after correction of the identified subcontract performance deficiency (unless the funds therefor must be recovered from the Government because of a reduction under paragraph (e)(5)(i)) of this clause; or

(B) Seven days after the Contractor recovers such funds from the Government; or

(ii) Incur an obligation to pay a late payment interest penalty computed at the rate of interest established by the Secretary of the Treasury, and published in the **Federal Register**, for interest payments under section 12 of the Contracts Disputes Act of 1978 (41 U.S.C. 611) in effect at the time the Contractor accrues the obligation to pay an interest penalty;

(5) *Notice to Contracting Officer.* Notify the Contracting Officer upon—

(i) Reduction of the amount of any subsequent certified application for payment; or

(ii) Payment to the subcontractor of any withheld amounts of a progress payment, specifying—

(A) The amounts withheld under paragraph (e)(1) of this clause; and

(B) The dates that such withholding began and ended; and

(6) *Interest to Government.* Be obligated to pay to the Government an amount equal to interest on the withheld payments (computed in the manner provided in 31 U.S.C. 3903(c)(1)), from the 8th day after receipt of

the withheld amounts from the Government until—

(i) The day the identified subcontractor performance deficiency is corrected; or

(ii) The date that any subsequent payment is reduced under paragraph (e)(5)(i) of this clause.

(f) *Third-party deficiency reports*—(1) *Withholding from subcontractor.* If a Contractor, after making payment to a first-tier subcontractor, receives from a supplier or subcontractor of the first-tier subcontractor (hereafter referred to as a ''second-tier subcontractor'') a written notice in accordance with section 2 of the Act of August 24, 1935 (40 U.S.C. 270b, Miller Act), asserting a deficiency in such first-tier subcontractor's performance under the contract for which the Contractor may be ultimately liable, and the Contractor determines that all or a portion of future payments otherwise due such first-tier subcontractor is subject to withholding in accordance with the subcontract agreement, the Contractor may, without incurring an obligation to pay an interest penalty under paragraph (e)(6) of this clause—

(i) Furnish to the first-tier subcontractor a notice conforming to the standards of paragraph (g) of this clause as soon as practicable upon making such determination; and

(ii) Withhold from the first-tier subcontractor's next available progress payment or payments an amount not to exceed the amount specified in the notice of withholding furnished under paragraph (f)(1)(i) of this clause.

(2) *Subsequent payment or interest charge.* As soon as practicable, but not later than 7 days after receipt of satisfactory written notification that the identified subcontract performance deficiency has been corrected, the Contractor shall—

(i) Pay the amount withheld under paragraph (f)(1)(ii) of this clause to such first-tier subcontractor; or

(ii) Incur an obligation to pay a late payment interest penalty to such first-tier subcontractor computed at the rate of interest established by the Secretary of the Treasury, and published in the **Federal Register**, for interest payments under section 12 of the Contracts Disputes Act of 1978 (41 U.S.C. 611) in effect at the time the Contractor accrues the obligation to pay an interest penalty.

(g) *Written notice of subcontractor withholding.* The Contractor shall issue a written notice of any withholding to a subcontractor (with a copy furnished to the Contracting Officer), specifying—

(1) The amount to be withheld;

(2) The specific causes for the withholding under the terms of the subcontract; and

(3) The remedial actions to be taken by the subcontractor in order to receive payment of the amounts withheld.

(h) *Subcontractor payment entitlement.* The Contractor may not request payment from the Government of any amount withheld or retained in accordance with paragraph (d) of this clause until such time as the Contractor has determined and certified to the Contracting Officer that the subcontractor is entitled to the payment of such amount.

(i) *Prime-subcontractor disputes.* A dispute between the Contractor and subcontractor relating to the amount or entitlement of a subcontractor to a payment or a late payment interest penalty under a clause included in the subcontract pursuant to paragraph (c) of this clause does not constitute a dispute to which the Government is a party. The Government may not be interpleaded in any judicial or administrative proceeding involving such a dispute.

(j) *Preservation of prime-subcontractor rights.* Except as provided in paragraph (i) of this clause, this clause shall not limit or impair any contractual, administrative, or judicial remedies otherwise available to the Contractor or a subcontractor in the event of a dispute involving late payment or nonpayment by the Contractor or deficient subcontract performance or nonperformance by a subcontractor.

(k) *Non-recourse for prime contractor interest penalty.* The Contractor's obligation to pay an interest penalty to a subcontractor pursuant to the clauses included in a subcontract under paragraph (c) of this clause shall not be construed to be an obligation of the Government for such interest penalty. A cost-reimbursement claim may not include any amount for reimbursement of such interest penalty.

(l) *Overpayments.* If the Contractor becomes aware of a duplicate payment or that the Government has otherwise overpaid on an invoice payment, the Contractor shall immediately notify the Contracting Officer and request instructions for disposition of the overpayment.

(End of clause)

90. *FAR 52.232-33 PAYMENT BY ELECTRONIC FUNDS TRANSFER –CENTRAL CONTRACTOR REGISTRATION (MAY 1999)

(a) *Method of payment*. (1) All payments by the Government under this contract shall be made by electronic funds transfer (EFT), except as provided in paragraph (a)(2) of this clause. As used in this clause, the term ''EFT'' refers to the funds transfer and may also include the payment information transfer.

(2) In the event the Government is unable to release one or more payments by EFT, the Contractor agrees to either—

(i) Accept payment by check or some other mutually agreeable method of payment; or

(ii) Request the Government to extend the payment due date until such time as the Government can make payment by EFT (but see paragraph (d) of this clause).

(b) *Contractor's EFT information*. The Government shall make payment to the Contractor using the EFT information contained in the Central Contractor Registration (CCR) database. In the event that the EFT information changes, the Contractor shall be responsible for providing the updated information to the CCR database.

(c) *Mechanisms for EFT payment*. The Government may make payment by EFT through either the Automated Clearing House (ACH) network, subject to the rules of the National Automated Clearing House Association, or the Fedwire Transfer System. The rules governing Federal payments through the ACH are contained in 31 CFR part 210.

(d) *Suspension of payment*. If the Contractor's EFT information in the CCR database is incorrect, then the Government need not make payment to the Contractor under this contract until correct EFT information is entered into the CCR database; and any invoice or contract financing request shall be deemed not to be a proper invoice for the purpose of prompt payment under this contract. The prompt payment terms of the contract regarding notice of an improper invoice and delays in accrual of interest penalties apply.

(e) *Contractor EFT arrangements*. If the Contractor has identified multiple payment receiving points (i.e., more than one remittance address and/or EFT information set) in the CCR database, and the Contractor has not notified the Government of the payment receiving point applicable to this contract, the Government shall make payment to the first payment receiving point (EFT information set or remittance address as applicable) listed in the CCR database.

(f) *Liability for uncompleted or erroneous transfers*. (1) If an uncompleted or erroneous transfer occurs because the Government used
the Contractor's EFT information incorrectly, the Government remains responsible for—

(i) Making a correct payment;

(ii) Paying any prompt payment penalty due; and

(iii) Recovering any erroneously directed funds.

(2) If an uncompleted or erroneous transfer occurs because the Contractor's EFT information was incorrect, or was revised within 30 days of Government release of the EFT payment transaction instruction to the Federal Reserve System, and—

(i) If the funds are no longer under the control of the payment office, the Government is deemed to have made payment and the Contractor is responsible for recovery of any erroneously directed funds; or

(ii) If the funds remain under the control of the payment office, the Government shall not make payment, and the provisions of paragraph (d) of this clause shall apply.

(g) *EFT and prompt payment*. A payment shall be deemed to have been made in a timely manner in accordance with the prompt payment terms of this contract if, in the EFT payment transaction instruction released to the Federal Reserve System, the date specified for settlement of the payment is on or before the prompt payment due date, provided the specified payment date is a valid date under the rules of the Federal Reserve System.

(h) *EFT and assignment of claims*. If the Contractor assigns the proceeds of this contract as provided for in the assignment of claims terms of this contract, the Contractor shall require as a condition of any such assignment, that the assignee shall register in the CCR database and shall be paid by EFT in accordance with the terms of this clause. In all respects, the requirements of this clause shall apply to the assignee as if it were the Contractor. EFT information that shows the ultimate recipient of the transfer to be other than the Contractor, in the absence of a proper assignment of claims acceptable to the Government, is incorrect EFT information within the meaning of paragraph (d) of this clause.

(i) *Liability for change of EFT information by financial agent*. The Government is not liable for errors

resulting from changes to EFT information made by the Contractor's financial agent.

(j) *Payment information*. The payment or disbursing office shall forward to the Contractor available payment information that is suitable for transmission as of the date of release of the EFT instruction to the Federal Reserve System. The Government may request the Contractor to designate a desired format and method(s) for delivery of payment information from a list of formats and methods the payment office is capable of executing. However, the Government does not guarantee that any particular format or method of delivery is available at any particular payment office and retains the latitude to use the format and delivery method most convenient to the Government. If the Government makes payment by check in accordance with paragraph (a) of this clause, the Government shall mail the payment information to the remittance address contained in the CCR database.
(End of Clause)

91. DFARS 252.232-7004 DOD PROGRESS PAYMENT RATES (OCT 2001)

(a) If the contractor is a small business concern, the Progress Payments clause of this contract is modified to change each mention of the progress payment rate and liquidation rate (excepting paragraph (k), *Limitations on Undefinitized Contract Actions*) to 90 percent.

(b) If the contractor is a small disadvantaged business concern, the Progress Payments clause of this contract is modified to change each mention of the progress payment rate and liquidation rate (excepting paragraph (k), *Limitations on Undefinitized Contract Actions*) to 95 percent.
(End of clause)

92. DFARS 252.232-7005 REIMBURSEMENT OF SUBCONTRACTOR ADVANCE PAYMENTS--DOD PILOT MENTOR-PROTEGE PROGRAM (SEP 2001)

(a) The Government will reimburse the Contractor for any advance payments made by the Contractor, as a mentor firm, to a protege firm, pursuant to an approved mentor-protege agreement, provided-

(1) The Contractor's subcontract with the protege firm includes a provision substantially the same as FAR 52.232-12, Advance Payments;

(2) The Contractor has administered the advance payments in accordance with the policies of FAR Subpart 32.4; and

(3) The Contractor agrees that any financial loss resulting from the failure or inability of the protege firm to repay any unliquidated advance payments is the sole financial responsibility of the Contractor.

(b) For a fixed price type contract, advance payments made to a protege firm shall be paid and administered as if they were 100 percent progress payments. The Contractor shall include as a separate attachment with each Standard Form (SF) 1443, Contractor's Request for Progress Payment, a request for reimbursement of advance payments made to a protege firm. The attachment shall provide a separate calculation of lines 14a through 14e of SF 1443 for each protege, reflecting the status of advance payments made to that protege.

(c) For cost reimbursable contracts, reimbursement of advance payments shall be made via public voucher. The Contractor shall show the amounts of advance payments made to each protege on the public voucher, in the form and detail directed by the cognizant contracting officer or contract auditor.
(End of clause)

93. *FAR 52.233-1 DISPUTES (JULY 2002)

(a) This contract is subject to the Contract Disputes Act of 1978, as amended (41 U.S.C. 601-613).

(b) Except as provided in the Act, all disputes arising under or relating to this contract shall be resolved under this clause.

(c) "Claim," as used in this clause, means a written demand or written assertion by one of the contracting parties seeking, as a matter of right, the payment of money in a sum certain, the adjustment or interpretation of contract terms, or other relief arising under or relating to this contract. However, a written demand or written assertion by the Contractor seeking the payment of money exceeding $100,000 is not a claim under the Act until

certified. A voucher, invoice, or other routine request for payment that is not in dispute when submitted is not a claim under the Act. The submission may be converted to a claim under the Act, by complying with the submission and certification requirements of this clause, if it is disputed either as to liability or amount or is not acted upon in a reasonable time.

(d)(1) A claim by the Contractor shall be made in writing and, unless otherwise stated in this contract, submitted within 6 years after accrual of the claim to the Contracting Officer for a written decision. A claim by the Government against the Contractor shall be subject to a written decision by the Contracting Officer.

(2) (i) Contractors shall provide the certification specified in paragraph (d)(2)(iii) of this clause when submitting any claim exceeding $100,000.

(ii) The certification requirement does not apply to issues in controversy that have not been submitted as all or part of a claim.

(iii) The certification shall state as follows:

'I certify that the claim is made in good faith; that the supporting data are accurate and complete to the best of my knowledge and belief; that the amount requested accurately reflects the contract adjustment for which the Contractor believes the Government is liable; and that I am duly authorized to certify the claim on behalf of the Contractor.'

(3) The certification may be executed by any person duly authorized to bind the Contractor with respect to the claim.

(e) For Contractor claims of $100,000 or less, the Contracting Officer must, if requested in writing by the Contractor, render a decision within 60 days of the request. For Contractor-certified claims over $100,000, the Contracting Officer must, within 60 days, decide the claim or notify the Contractor of the date by which the decision will be made.

(f) The Contracting Officer's decision shall be final unless the Contractor appeals or files a suit as provided in the Act.

(g) If the claim by the Contractor is submitted to the Contracting Officer or a claim by the Government is presented to the Contractor, the parties, by mutual consent, may agree to use alternative dispute resolution (ADR). If the Contractor refuses an offer for ADR, the Contractor shall inform the Contracting Officer, in writing, of the Contractor's specific reasons for rejecting the offer.

(h) The Government shall pay interest on the amount found due and unpaid from (1) the date the Contracting Officer receives the claim (certified if required), or (2) the date that payment otherwise would be due, if that date is later, until the date of payment. With regard to claims having defective certifications, as defined in (FAR) 48 CFR 33.201, interest shall be paid from the date that the Contracting Officer initially receives the claim. Simple interest on claims shall be paid at the rate, fixed by the Secretary of the Treasury as provided in the Act, which is applicable to the period during which the Contracting Officer receives the claim and then at the rate applicable for each 6-month period as fixed by the Treasury Secretary during the pendency of the claim.

(i) The Contractor shall proceed diligently with performance of this contract, pending final resolution of any request for relief, claim, appeal, or action arising under the contract, and comply with any decision of the Contracting Officer.

94. *FAR 52.233-1I DISPUTES (JULY 2002) ALTERNATE I (DEC 1991)

(a) This contract is subject to the Contract Disputes Act of 1978, as amended (41 U.S.C. 601-613).

(b) Except as provided in the Act, all disputes arising under or relating to this contract shall be resolved under this clause.

(c) “Claim,” as used in this clause, means a written demand or written assertion by one of the contracting parties seeking, as a matter of right, the payment of money in a sum certain, the adjustment or interpretation of contract terms, or other relief arising under or relating to this contract. However, a written demand or written assertion by the Contractor seeking the payment of money exceeding $100,000 is not a claim under the Act until certified. A voucher, invoice, or other routine request for payment that is not in dispute when submitted is not a claim under the Act. The submission may be converted to a claim under the Act, by complying with the submission and certification requirements of this clause, if it is disputed either as to liability or amount or is not acted upon in a reasonable time.

(d)(1) A claim by the Contractor shall be made in writing and, unless otherwise stated in this contract, submitted within 6 years after accrual of the claim to the Contracting Officer for a written decision. A claim by the Government against the Contractor shall be subject to a written decision by the Contracting Officer.

(2) (i) Contractors shall provide the certification specified in paragraph (d)(2)(iii) of this clause when submitting any claim exceeding $100,000.

(ii) The certification requirement does not apply to issues in controversy that have not been submitted as all or part of a claim.

(iii) The certification shall state as follows: "I certify that the claim is made in good faith; that the supporting data are accurate and complete to the best of my knowledge and belief; that the amount requested accurately reflects the contract adjustment for which the Contractor believes the Government is liable; and that I am duly authorized to certify the claim on behalf of the Contractor."

(3) The certification may be executed by any person duly authorized to bind the Contractor with respect to the claim.

(e) For Contractor claims of $100,000 or less, the Contracting Officer must, if requested in writing by the Contractor, render a decision within 60 days of the request. For Contractor-certified claims over $100,000, the Contracting Officer must, within 60 days, decide the claim or notify the Contractor of the date by which the decision will be made.

(f) The Contracting Officer's decision shall be final unless the Contractor appeals or files a suit as provided in the Act.

(g) If the claim by the Contractor is submitted to the Contracting Officer or a claim by the Government is presented to the Contractor, the parties, by mutual consent, may agree to use alternative dispute resolution (ADR). If the Contractor refuses an offer for ADR, the Contractor shall inform the Contracting Officer, in writing, of the Contractor's specific reasons for rejecting the offer.

(h) The Government shall pay interest on the amount found due and unpaid from (1) the date that the Contracting Officer receives the claim (certified, if required); or (2) the date that payment otherwise would be due, if that date is later, until the date of payment. With regard to claims having defective certifications, as defined in FAR 33.201, interest shall be paid from the date that the Contracting Officer initially receives the claim. Simple interest on claims shall be paid at the rate, fixed by the Secretary of the Treasury as provided in the Act, which is applicable to the period during which the Contracting Officer receives the claim and then at the rate applicable for each 6-month period as fixed by the Treasury Secretary during the pendency of the claim.

(i) The Contractor shall proceed diligently with performance of this contract, pending final resolution of any request for relief, claim, appeal, or action arising under or relating to the contract, and comply with any decision of the Contracting Officer. (End of clause)

95. *FAR 52.233-3 PROTEST AFTER AWARD (AUG 1996)

(a) Upon receipt of a notice of protest (as defined in FAR 33.101) or a determination that a protest is likely (see FAR 33.102(d)), the Contracting Officer may, by written order to the Contractor, direct the Contractor to stop performance of the work called for by this contract. The order shall be specifically identified as a stop-work order issued under this clause. Upon receipt of the order, the Contractor shall immediately comply with its terms and take all reasonable steps to minimize the incurrence of costs allocable to the work covered by the order during the period of work stoppage. Upon receipt of the final decision in the protest, the Contracting Officer shall either--

(1) Cancel the stop-work order; or

(2) Terminate the work covered by the order as provided in the Default, or the Termination for Convenience of the Government, clause of this contract.

(b) If a stop-work order issued under this clause is canceled either before or after a final decision in the protest, the Contractor shall resume work. The Contracting Officer shall make an equitable adjustment in the delivery schedule or contract price, or both, and the contract shall be modified, in writing, accordingly, if--

(1) The stop-work order results in an increase in the time required for, or in the Contractor's cost properly allocable to, the performance of any part of this contract; and

(2) The Contractor asserts its right to an adjustment within 30 days after the end of the period of work stoppage; provided, that if the Contracting Officer decides the facts justify the action, the Contracting Officer may receive and act upon a proposal at any time before final payment under this contract.

(c) If a stop-work order is not canceled and the work covered by the order is terminated for the convenience of the Government, the Contracting Officer shall allow reasonable costs resulting from the stop-work order in arriving at the termination settlement.

(d) If a stop-work order is not canceled and the work covered by the order is terminated for default, the Contracting Officer shall allow, by equitable adjustment or otherwise, reasonable costs resulting from the stop-work order.

(e) The Government's rights to terminate this contract at any time are not affected by action taken under this clause.

(f) If, as the result of the Contractor's intentional or negligent misstatement, misrepresentation, or miscertification, a protest related to this contract is sustained, and the Government pays costs, as provided in FAR 33.102(b)(2) or 33.104(h)(1), the Government may require the Contractor to reimburse the Government the amount of such costs. In addition to any other remedy available, and pursuant to the requirements of Subpart 32.6, the Government may collect this debt by offsetting the amount against any payment due the Contractor under any contract between the Contractor and the Government.

96. RESERVED.

97. FAR 52.236-2 DIFFERING SITE CONDITIONS (APR 1984)

(a) The Contractor shall promptly, and before the conditions are disturbed, give a written notice to the Contracting Officer of

(1) subsurface or latent physical conditions at the site which differ materially from those indicated in this contract, or

(2) unknown physical conditions at the site, of an unusual nature, which differ materially from those ordinarily encountered and generally recognized as inhering in work of the character provided for in the contract.

(b) The Contracting Officer shall investigate the site conditions promptly after receiving the notice. If the conditions do materially so differ and cause an increase or decrease in the Contractor's cost of, or the time required for, performing any part of the work under this contract, whether or not changed as a result of the conditions, an equitable adjustment shall be made under this clause and the contract modified in writing accordingly.

(c) No request by the Contractor for an equitable adjustment to the contract under this clause shall be allowed, unless the Contractor has given the written notice required, provided, that the time prescribed in (a) above for giving written notice may be extended by the Contracting Officer.

(d) No request by the Contractor for an equitable adjustment to the contract for differing site conditions shall be allowed if made after final payment under this contract.

98. *FAR 52.236-3 SITE INVESTIGATION AND CONDITIONS AFFECTING THE WORK (APR 1984)

(a) The Contractor acknowledges that it has taken steps reasonably necessary to ascertain the nature and location of the work, and that it has investigated and satisfied itself as to the general and local conditions which can affect the work or its cost, including but not limited to

(1) conditions bearing upon transportation, disposal, handling, and storage of materials;

(2) the availability of labor, water, electric power, and roads;

(3) uncertainties of weather, river stages, tides, or similar physical conditions at the site;

(4) the conformation and conditions of the ground; and

(5) the character of equipment and facilities needed preliminary to and during work performance. The Contractor also acknowledges that it has satisfied itself as to the character, quality, and quantity of surface and subsurface materials or obstacles to be encountered insofar as this information is reasonably ascertainable from an inspection of the site, including all exploratory work done by the Government, as well as from the drawings and specifications made a part of this contract. Any failure of the Contractor to take the actions

described and acknowledged in this paragraph will not relieve the Contractor from responsibility for estimating properly the difficulty and cost of successfully performing the work, or for proceeding to successfully perform the work without additional expense to the Government.

(b) The Government assumes no responsibility for any conclusions or interpretations made by the Contractor based on the information made available by the Government. Nor does the Government assume responsibility for any understanding reached or representation made concerning conditions which can affect the work by any of its officers or agents before the execution of this contract, unless that understanding or representation is expressly stated in this contract.

99. *FAR 52.236-5 MATERIAL AND WORKMANSHIP (APR 1984)

(a) All equipment, material, and articles incorporated into the work covered by this contract shall be new and of the most suitable grade for the purpose intended, unless otherwise specifically provided in this contract. References in the specifications to equipment, material, articles, or patented processes by trade name, make, or catalog number, shall be regarded as establishing a standard of quality and shall not be construed as limiting competition. The Contractor may, at its option, use any equipment, material, article, or process that, in the judgment of the Contracting Officer, is equal to that named in the specifications, unless otherwise specifically provided in this contract.

(b) The Contractor shall obtain the Contracting Officer's approval of the machinery and mechanical and other equipment to be incorporated into the work. When requesting approval, the Contractor shall furnish to the Contracting Officer the name of the manufacturer, the model number, and other information concerning the performance, capacity, nature, and rating of the machinery and mechanical and other equipment. When required by this contract or by the Contracting Officer, the Contractor shall also obtain the Contracting Officer's approval of the material or articles which the Contractor contemplates incorporating into the work. When requesting approval, the Contractor shall provide full information concerning the material or articles. When directed to do so, the Contractor shall submit samples for approval at the Contractor's expense, with all shipping charges prepaid. Machinery, equipment, material, and articles that do not have the required approval shall be installed or used at the risk of subsequent rejection.

(c) All work under this contract shall be performed in a skillful and workmanlike manner. The Contracting Officer may require, in writing, that the Contractor remove from the work any employee the Contracting Officer deems incompetent, careless, or otherwise objectionable.

100. *FAR 52.236-6 SUPERINTENDENCE BY THE CONTRACTOR (APR 1984)

At all times during performance of this contract and until the work is completed and accepted, the Contractor shall directly superintend the work or assign and have on the work site a competent superintendent who is satisfactory to the Contracting Officer and has authority to act for the Contractor.

101. FAR 52.236-7 PERMITS AND RESPONSIBILITIES (NOV 1991)

The Contractor shall, without additional expense to the Government, be responsible for obtaining any necessary licenses and permits, and for complying with any Federal, State, and municipal laws, codes, and regulations applicable to the performance of the work. The Contractor shall also be responsible for all damages to persons or property that occur as a result of the Contractor's fault or negligence. The Contractor shall also be responsible for all materials delivered and work performed until completion and acceptance of the entire work, except for any completed unit of work which may have been accepted under the contract.

102. *FAR 52.236-8 OTHER CONTRACTS (APR 1984)

The Government may undertake or award other contracts for additional work at or near the site of the work under this contract. The Contractor shall fully cooperate with the other contractors and with Government employees

and shall carefully adapt scheduling and performing the work under this contract to accommodate the additional work, heeding any direction that may be provided by the Contracting Officer. The Contractor shall not commit or permit any act that will interfere with the performance of work by any other contractor or by Government employees.

103. *FAR 52.236-9 PROTECTION OF EXISTING VEGETATION, STRUCTURES, EQUIPMENT, UTILITIES, AND IMPROVEMENTS (APR 1984)

(a) The Contractor shall preserve and protect all structures, equipment, and vegetation (such as trees, shrubs, and grass) on or adjacent to the work site, which are not to be removed and which do not unreasonably interfere with the work required under this contract. The Contractor shall only remove trees when specifically authorized to do so, and shall avoid damaging vegetation that will remain in place. If any limbs or branches of trees are broken during contract performance, or by the careless operation of equipment, or by workmen, the Contractor shall trim those limbs or branches with a clean cut and paint the cut with a tree-pruning compound as directed by the Contracting Officer.

(b) The Contractor shall protect from damage all existing improvements and utilities

(1) at or near the work site, and

(2) on adjacent property of a third party, the locations of which are made known to or should be known by the Contractor. The Contractor shall repair any damage to those facilities, including those that are the property of a third party, resulting from failure to comply with the requirements of this contract or failure to exercise reasonable care in performing the work. If the Contractor fails or refused to repair the damage promptly, the Contracting Officer may have the necessary work performed and charge the cost to the Contractor.

104. FAR 52.236-10 OPERATIONS AND STORAGE AREAS (APR 1984)

(a) The Contractor shall confine all operations (including storage of materials) on Government premises to areas authorized or approved by the Contracting Officer. The Contractor shall hold and save the Government, its officers and agents, free and harmless from liability of any nature occasioned by the Contractor's performance.

(b) Temporary buildings (e.g., storage sheds, shops, offices) and utilities may be erected by the Contractor only with the approval of the Contracting Officer and shall be built with labor and materials furnished by the Contractor without expense to the Government. The temporary buildings and utilities shall remain the property of the Contractor and shall be removed by the Contractor at its expense upon completion of the work. With the written consent of the Contracting Officer, the buildings and utilities may be abandoned and need not be removed.

(c) The Contractor shall, under regulations prescribed by the Contracting Officer, use only established roadways, or use temporary roadways constructed by the Contractor when and as authorized by the Contracting Officer. When materials are transported in prosecuting the work, vehicles shall not be loaded beyond the loading capacity recommended by the manufacturer of the vehicle or prescribed by any Federal, State, or local law or regulation. When it is necessary to cross curbs or sidewalks, the Contractor shall protect them from damage. The Contractor shall repair or pay for the repair of any damaged curbs, sidewalks, or roads.

105. *FAR 52.236-11 USE AND POSSESSION PRIOR TO COMPLETION (APR 1984)

(a) The Government shall have the right to take possession of or use any completed or partially completed part of the work. Before taking possession of or using any work, the Contracting Officer shall furnish the Contractor a list of items of work remaining to be performed or corrected on those portions of the work that the Government intends to take possession of or use. However, failure of the Contracting Officer to list any item of work shall not relieve the Contractor of responsibility for complying with the terms of the contract. The Government's possession or use shall not be deemed an acceptance of any work under the contract.

(b) While the Government has such possession or use, the Contractor shall be relieved of the responsibility for the loss of or damage to the work resulting from the Government's possession or use, notwithstanding the terms of the clause in this contract entitled "Permits and Responsibilities." If prior possession or use by the Government delays the progress of the work or causes additional expense to the Contractor, an equitable adjustment shall be made in the contract price or the time of completion, and the contract shall be modified in writing accordingly.

106. *FAR 52.236-12 CLEANING UP (APR 1984)

The Contractor shall at all times keep the work area, including storage areas, free from accumulations of waste materials. Before completing the work, the Contractor shall remove from the work and premises any rubbish, tools, scaffolding, equipment, and materials that are not the property of the Government. Upon completing the work, the Contractor shall leave the work area in a clean, neat, and orderly condition satisfactory to the Contracting Officer.

107. *FAR 52.236-13 ACCIDENT PREVENTION-ALTERNATE I (NOV 1991)

(a) The Contractor shall provide and maintain work environments and procedures which will (1) safeguard the public and Government personnel, property, materials, supplies, and equipment exposed to Contractor operations and activities; (2) avoid interruptions of Government operations and delays in project completion dates; and (3) control costs in the performance of this contract.

(b) For these purposes on contracts for construction or dismantling, demolition, or removal of improvements, the Contractor shall--

(1) Provide appropriate safety barricades, signs, and signal lights;

(2) Comply with the standards issued by the Secretary of Labor at 29 CFR Part 1926 and 29 CFR Part 1910; and

(3) Ensure that any additional measures the Contracting Officer determines to be reasonably necessary for the purposes are taken.

(c) If this contract is for construction or dismantling, demolition or removal of improvements with any Department of Defense agency or component, the Contractor shall comply with all pertinent provisions of the latest version of U.S. Army Corps of engineers Safety and Health Requirements Manual, EM 385-1-1, in effect on the date of the solicitation.

(d) Whenever the Contracting Officer becomes aware of any noncompliance with these requirements or any condition which poses a serious or imminent danger to the health or safety of the public or Government personnel, the Contracting Officer shall notify the Contractor orally, with written confirmation, and request immediate initiation of corrective action. This notice, when delivered to the Contractor or the Contractor's representative at the work site, shall be deemed sufficient notice of the noncompliance and that corrective action is required. After receiving the notice, the Contractor shall immediately take corrective action. If the Contractor fails or refuses to promptly take corrective action, the Contracting Officer may issue an order stopping all or part of the work until satisfactory corrective action has been taken. The Contractor shall not be entitled to any equitable adjustment of the contract price or extension of the performance schedule on any stop work order issued under this clause.

(e) The Contractor shall insert this clause, including this paragraph (e), with appropriate changes in the designation of the parties, in subcontractors.

(f) Before commencing the work, the Contractor shall--

(1) Submit a written proposed plan for implementing this clause. The plan shall include an analysis of the significant hazards to life, limb, and property inherent in contract work performance and a plan for controlling these hazards; and

(2) Meet with representatives of the Contracting Officer to discuss and develop a mutual understanding relative to administration of the overall safety program.

108. *FAR 52.236-14 AVAILABILITY AND USE OF UTILITY SERVICES (APR 1984)

(a) The Government shall make all reasonably required amounts of utilities available to the Contractor from existing outlets and supplies, as specified in the contract. Unless otherwise provided in the contract, the amount of each utility service consumed shall be charged to or paid for by the Contractor at prevailing rates charged to the Government or, where the utility is produced by the Government, at reasonable rates determined by the Contracting Officer. The Contractor shall carefully conserve any utilities furnished without charge.

(b) The Contractor, at its expense and in a workmanlike manner satisfactory to the Contracting Officer, shall install and maintain all necessary temporary connections and distribution lines, and all meters required to measure the amount of each utility used for the purpose of determining charges. Before final acceptance of the work by the Government, the Contractor shall remove all the temporary connections, distribution lines, meters, and associated paraphernalia.

109. FAR 52.236-15 SCHEDULES FOR CONSTRUCTION CONTRACTS (APR 1984)

(a) The Contractor shall, within five days after the work commences on the contract or another period of time determined by the Contracting Officer, prepare and submit to the Contracting Officer for approval three copies of a practicable schedule showing the order in which the Contractor proposes to perform the work, and the dates on which the Contractor contemplates starting and completing the several salient features of the work (including acquiring materials, plant, and equipment). The schedule shall be in the form of a progress chart of suitable scale to indicate appropriately the percentage of work scheduled for completion by any given date during the period. If the Contractor fails to submit a schedule within the time prescribed, the Contracting Officer may withhold approval of progress payments until the Contractor submits the required schedule.

(b) The Contractor shall enter the actual progress on the chart as directed by the Contracting Officer, and upon doing so shall immediately deliver three copies of the annotated schedule to the Contracting Officer. If, in the opinion of the Contracting Officer, the Contractor falls behind the approved schedule, the Contractor shall take steps necessary to improve its progress, including those that may be required by the Contracting Officer, without additional cost to the Government. In this circumstance, the Contracting Officer may require the Contractor to increase the number of shifts, overtime operations, days of work, and/or the amount of construction plant, and to submit for approval any supplementary schedule or schedules in chart form as the Contracting Officer deems necessary to demonstrate how the approved rate of progress will be regained.

(c) Failure of the Contractor to comply with the requirements of the Contracting Officer under this clause shall be grounds for a determination by the Contracting Officer that the Contractor is not prosecuting the work with sufficient diligence to ensure completion within the time specified in the contract. Upon making this determination, the Contracting Officer may terminate the Contractor's right to proceed with the work, or any separable part of it, in accordance with the default terms of this contract.

110. *FAR 52.236-17 LAYOUT OF WORK (APR 1984)

The Contractor shall lay out its work from Government-established base lines and bench marks indicated on the drawings, and shall be responsible for all measurements in connection with the layout. The Contractor shall furnish, at its own expense, all stakes, templates, platforms, equipment, tools, materials, and labor required to lay out any part of the work. The Contractor shall be responsible for executing the work to the lines and grades that may be established or indicated by the Contracting Officer. The Contractor shall also be responsible for maintaining and preserving all stakes and other marks established by the Contracting Officer until authorized to remove them. If such marks are destroyed by the Contractor or through its negligence before their removal is authorized, the Contracting Officer may replace them and deduct the expense of the replacement from any amounts due or to become due to the Contractor.

111. FAR 52.236-21 SPECIFICATIONS AND DRAWINGS FOR CONSTRUCTION (FEB

1997)

(a) The Contractor shall keep on the work site a copy of the drawings and specifications and shall at all times give the Contracting Officer access thereto. Anything mentioned in the specifications and not shown on the drawings, or shown on the drawings and not mentioned in the specifications, shall be of like effect as if shown or mentioned in both. In case of difference between drawings and specifications, the specifications shall govern. In case of discrepancy in the figures, in the drawings, or in the specifications, the matter shall be promptly submitted to the Contracting Officer, who shall promptly make a determination in writing. Any adjustment by the Contractor without such a determination shall be at its own risk and expense. The Contracting Officer shall furnish from time to time such detailed drawings and other information as considered necessary, unless otherwise provided.

(b) Wherever in the specifications or upon the drawings the words "directed," "required," "ordered," "designated," "prescribed," or words of like import are used, it shall be understood that the "direction," "requirement," "order," "designation," or "prescription," of the Contracting Officer is intended and similarly the words "approved," "acceptable," "satisfactory," or words of like import shall mean "approved by," or "acceptable to," or "satisfactory to" the Contracting Officer, unless otherwise expressly stated.

(c) Where "as shown," "as indicated," "as detailed," or words of similar import are used, it shall be understood that the reference is made to the drawings accompanying this contract unless stated otherwise. The word "provided" as used herein shall be understood to mean "provide complete in place," that is "furnished and installed."

(d) Shop drawings means drawings, submitted to the Government by the Contractor, subcontractor, or any lower tier subcontractor pursuant to a construction contract, showing in detail

(1) the proposed fabrication and assembly of structural elements, and

(2) the installation (i.e., fit, and attachment details) of materials or equipment. It includes drawings, diagrams, layouts, schematics, descriptive literature, illustrations, schedules, performance and test data, and similar materials furnished by the Contractor to explain in detail specific portions of the work required by the contract. The Government may duplicate, use, and disclose in any manner and for any purpose shop drawings delivered under this contract.

(e) If this contract requires shop drawings, the Contractor shall coordinate all such drawings, and review them for accuracy, completeness, and compliance with contract requirements and shall indicate its approval thereon as evidence of such coordination and review. Shop drawings submitted to the Contracting Officer without evidence of the Contractor's approval may be returned for resubmission. The Contracting Officer will indicate an approval or disapproval of the shop drawings and if not approved as submitted shall indicate the Government's reasons therefor. Any work done before such approval shall be at the Contractor's risk. Approval by the Contracting Officer shall not relieve the Contractor from responsibility for any errors or omissions in such drawings, nor from responsibility for complying with the requirements of this contract, except with respect to variations described and approved in accordance with (f) below.

(f) If shop drawings show variations from the contract requirements, the Contractor shall describe such variations in writing, separate from the drawings, at the time of submission. If the Contracting Officer approves any such variation, the Contracting Officer shall issue an appropriate contract modification, except that, if the variation is minor or does not involve a change in price or in time of performance, a modification need not be issued.

(g) The Contractor shall submit to the Contracting Officer for approval four copies (unless otherwise indicated) of all shop drawings as called for under the various headings of these specifications. Three sets (unless otherwise indicated) of all shop drawings, will be retained by the Contracting Officer and one set will be returned to the Contractor.

112. *FAR 52.236-23 RESPONSIBILITY OF THE ARCHITECT-ENGINEER CONTRACTOR (APR 1984)

(a) The Contractor shall be responsible for the professional quality, technical accuracy, and the coordination of all designs, drawings, specifications, and other services furnished by the Contractor under this contract. The Contractor shall, without additional compensation, correct or revise any errors or deficiencies in its designs, drawings, specifications, and other services.

(b) Neither the Government's review, approval or acceptance of, nor payment for, the services required under this contract shall be construed to operate as a waiver of any rights under this contract or of any cause of action arising out of the performance of this contract, and the Contractor shall be and remain liable to the Government in accordance with applicable law for all damages to the Government caused by the Contractor's negligent performance of any of the services furnished under this contract.

(c) The rights and remedies of the Government provided for under this contract are in addition to any other rights and remedies provided by law.

(d) If the Contractor is comprised of more than one legal entity, each such entity shall be jointly and severally liable hereunder. (End of clause)

113. *FAR 52.236-24 WORK OVERSIGHT IN ARCHITECT-ENGINEER CONTRACTS (APR 1984)

The extent and character of the work to be done by the Contractor shall be subject to the general oversight, supervision, direction, control, and approval of the Contracting Officer. (End of clause)

114. *FAR 52.236-25 REQUIREMENTS FOR REGISTRATION OF DESIGNERS (JUNE 2003)

Architects or engineers registered to practice in the particular professional field involved in a State, the District of Columbia, or an outlying area of the United States shall prepare or review and approve the design of architectural, structural, mechanical, electrical, civil, or other engineering features of the work. (End of clause)

115. *FAR 52.236-26 PRECONSTRUCTION CONFERENCE (FEB 1995)

If the Contracting Officer decides to conduct a preconstruction conference, the successful offeror will be notified and will be required to attend. The Contracting Officer's notification will include specific details regarding the date, time, and location of the conference, any need for attendance by subcontractors, and information regarding the items to be discussed.

116. DFARS 252.236-7000 MODIFICATION OF PROPOSALS - PRICE BREAKDOWN (DEC 1991)

(a) The Contractor shall furnish a price breakdown, itemized as required and within the time specified by the Contracting Officer, with any proposal for a contract modification.

(b) The price breakdown--

(1) Must include sufficient detail to permit an analysis of profit, and of all costs for--

(i) Material;

(ii) Labor,

(iii) Equipment;

(iv) Subcontracts; and

(2) Most cover all work involved in the modification, whether the work was deleted, added, or changed.

(c) The Contractor shall provide similar price breakdowns to support any amounts claimed for subcontracts.

(d) The Contractor's proposal shall include a justification for any time extension proposed.

117. *FAR 52.242-13 BANKRUPTCY (JUL 1995)

In the event the Contractor enters into proceedings relating to bankruptcy, whether voluntary or involuntary, the Contractor agrees to furnish, by certified mail or electronic commerce method authorized by the contract, written

notification of the bankruptcy to the Contracting Officer responsible for administering the contract. This notification shall be furnished within five days of the initiation of the proceedings relating to bankruptcy filing. This notification shall include the date on which the bankruptcy petition was filed, the identity of the court in which the bankruptcy petition was filed, and a listing of Government contract numbers and contracting offices for all Government contracts against which final payment has not been made. This obligation remains in effect until final payment under this contract.

118. *FAR 52.242-14 SUSPENSION OF WORK (APR 1984)

(a) The Contracting Officer may order the Contractor, in writing, to suspend, delay, or interrupt all or any part of the work of this contract for the period of time that the Contracting Officer determines appropriate for the convenience of the Government.

(b) If the performance of all or any part of the work is, for an unreasonable period of time, suspended, delayed, or interrupted (1) by an act of the Contracting Officer in the administration of this contract, or (2) by the Contracting Officer's failure to act within the time specified in this contract (or within a reasonable time if not specified), an adjustment shall be made for any increase in the cost of performance of this contract (excluding profit) necessarily caused by the unreasonable suspension, delay, or interruption, and the contract modified in writing accordingly. However, no adjustment shall be made under this clause for any suspension, delay, or interruption to the extent that performance would have been so suspended, delayed, or interrupted by any other cause, including the fault or negligence of the Contractor, or for which an equitable adjustment is provided for or excluded under any other term or condition of this contract.

(c) A claim under this clause shall not be allowed (1) for any costs incurred more than 20 days before the Contractor shall have notified the Contracting Officer in writing of the act or failure to act involved (but this requirement shall not apply as to a claim resulting from a suspension order), and (2) unless the claim, in an amount stated, is asserted in writing as soon as practicable after the termination of the suspension, delay, or interruption, but not later than the date of final payment under the contract.

119. DFARS 252.242-7005 COST/SCHEDULE STATUS REPORT (MAR 1998)

(a) The Contractor shalluse management procedures in the performance of this contract that provide for--

(1) Planning and control of costs;

(2) Measurement of performance (value for completed tasks); and

(3) Generation of timely and reliable information for the cost/schedule status report (C/SSR).

(b) As a minimum, these procedures must provide for--

(1) Establishing the time-phased budgeted cost of work scheduled (including work authorization, budgeting, and scheduling), the budgeted cost for work performed, the actual cost of work performed, the budget at completion, the estimate at completion, and provisions for subcontractor performance measurement and reporting;

(2) Applying all direct and indirect costs and provisions for use and control of management reserve and undistributed budget;

(3) Incorporating changes to the contract budget base for both Government directed changes and internal replanning;

(4) Establishing constraints to preclude subjective adjustment of data to ensure performance measurement remains realistic. The total allocated budget may exceed the contract budget base only after consultation with the Contracting Officer. For cost-reimbursement contracts, the contract budget base shall exclude changes for cost growth increases, other than for authorized changes to the contract scope; and

(5) Establishing the capability to accurately identify and explain significant cost and schedule variances, both on a cumulative basis and projected at completion basis.

(c) The Offeror/Contractor may use a cost/schedule control system that has been recognized by the congnizant Administrative Contracting Officer (ACO) as complying with the earned value management system criteria provided in DoD 5000.2-R, Manadatory Procedures for Major Defense Acquisition Programs (MDAPs) and Major Automated Information System (MAIS) Acquisition Programs.

(d) The Government may require integrated baseline reviews. Such reviews shallbe scheduled as early as practicable and should be conducted within 180 calendar days after (1) contract award, (2) the exercise of significant contract options, or (3) the incorporation of major modifications. The objective of the integrated baseline review is for the Government and the Contractor to jointly assess areas, such as the Contractor's planning, to ensure complete coverage of the statement of work, logical scheduling of the work activities, adequate resourcing, and identification of inherent risks.

(e) The Contractor shall provide access to all pertinent records, company procedures, and data requested by the Contracting Officer, or authorized representative, to--

(1) Show proper implementation of the procedures generating the cost schedule information being used to satisfy the C/SSR contractual data requirements to the Government; and

(2) Ensure continuing application of the accepted company procedures in satisfying the C/SSR data item.

(f) The Contractor shall submit any substantive changes to the procedures and their impact to the ACO for review.

(g) The Contractor shall require a subcontractor to furnish C/SSR in each case where the subcontract is other than firm fixed-price, is 12 months or more in duration, and has critical or significant tasks related to the prime contract. Critical or significant tasks shall be defined by mutual agreement between the Government and Contractor. Each subcontractor's reported cost and schedule information shall be incorporated into the Contractor's C/SSR.

(End of clause)

120. *FAR 52.243-1 CHANGES--FIXED-PRICE (AUG 1987) ALTERNATE III (AUG 1984)

(a) The Contracting Officer may at any time, by written order, and without notice to the sureties, if any, make changes within the general scope of this contract in the services to be performed.

(b) If any such change causes an increase or decrease in the cost of, or the time required for, performance of any part of the work under this contract, whether or not changed by the order, the Contracting Officer shall make an equitable adjustment in the contract price, the delivery schedule, or both, and shall modify the contract.

(c) The Contractor must assert its right to an adjustment under this clause within 30 days from the date of receipt of the written order. However, if the Contracting Officer decides that the facts justify it, the Contracting Officer may receive and act upon a proposal submitted before final payment of the contract.

(d) If the Contractor's proposal includes the cost of property made obsolete or excess by the change, the Contracting Officer shall have the right to prescribe the manner of the disposition of the property.

(e) Failure to agree to any adjustment shall be a dispute under the Disputes clause. However, nothing in this clause shall excuse the Contractor from proceeding with the contract as changed.

(f) No services for which an additional cost or fee will be charged by the Contractor shall be furnished without the prior written authorization of the Contracting Officer. (End of clause)

121. FAR 52.243-4 CHANGES (AUG 1987)

(a) The Contracting Officer may, at any time, without notice to the sureties, if any, by written order designated or indicated to be a change order, make changes in the work within the general scope of the contract, including changes--

(1) In the specifications (including drawings and designs);

(2) In the method or manner of performance of the work;

(3) In the Government-furnished facilities, equipment, materials, services, or site; or

(4) Directing acceleration in the performance of the work.

(b) Any other written or oral order (which, as used in this paragraph (b), includes direction, instruction, interpretation, or determination) from the Contracting Officer that causes a change shall be treated as a change order under this clause; provided, that the Contractor gives the Contracting Officer written notice stating

(1) the date, circumstances, and source of the order and

(2) that the Contractor regards the order as a change order.

(c) Except as provided in this clause, no order, statement, or conduct of the Contracting Officer shall be treated as a change under this clause or entitle the Contractor to an equitable adjustment.

(d) If any change under this clause causes an increase or decrease in the Contractor's cost of, or the time required for, the performance of any part of the work under this contract, whether or not changed by any such order, the Contracting Officer shall make an equitable adjustment and modify the contract in writing. However, except for an adjustment based on defective specifications, no adjustment for any change under paragraph (b) of this clause shall be made for any costs incurred more than 20 days before the Contractor gives written notice as required. In the case of defective specifications for which the Government is responsible, the equitable adjustment shall include any increased cost reasonably incurred by the Contractor in attempting to comply with the defective specifications.

(e) The Contractor must assert its right to an adjustment under this clause within 30 days after

(1) receipt of a written change order under paragraph (a) of this clause or

(2) the furnishing of a written notice under paragraph (b) of this clause, by submitting to the Contracting Officer a written statement describing the general nature and amount of the proposal, unless this period is extended by the Government. The statement of proposal for adjustment may be included in the notice under paragraph (b) above.

(f) No proposal by the Contractor for an equitable adjustment shall be allowed if asserted after final payment under this contract.

122. DFARS 252.243-7001 PRICING OF CONTRACT MODIFICATIONS (DEC 1991)

When costs are a factor in any price adjustment under this contract, the contract cost principles and procedures in FAR Part 31 and DRARS Part 231, in effect on the date of this contract, apply.

123. DFARS 252.243-7002 REQUESTS FOR EQUITABLE ADJUSTMENT (MAR 1998)

(a) The amount of any request for equitable adjustment to contract terms shall accurately reflect the contract adjustment for which the Contractor believes the Government is liable. The request shall include only costs for performing the change, and shall not include any costs that already have been reimbursed or that have been separately claimed. All indirect costs included in the request shall be properly allocable to the change in accordance with applicable acquisition regulations.

(b)In accordance with 10 U.S.C. 2410(a), any request for equitable adjustment to contract terms that exceeds the simplified acquisition threshold shall bear, at the time of submission, the following certificate executed by an individual authorized to certify the request on behalf of the Contractor:
I certify that the request is made in good faith, and that the supporting data are accurate and complete to the best of may knowledge and belief.

(Official's Name)

(Title)

(c) The certification in paragraph (b) of this clause requires full disclosure of all relevant facts, including--

(1) Cost or pricing data if required in accordance with subsection 15.403-4 of the Federal Acquisition Regulation; and

(2) Information other than cost or pricing data, in accordance with subsection 15.403-3 of the FAR, including actual cost data and data to support any estimated costs, even if cost or pricing data are not required.

(d) The certification requirement in paragraph (b) of this clause does not apply to----

(1) Requests for routine contract payments; for example, requests for payment for accepted supplies and services, routine vouchers under a cost-reimbursement type contract, or progress payment invoices; or

(2) Final adjustment under an incentive provision of the contract.

(End of clause)

124. *FAR 52.244-2 SUBCONTRACTS (AUG 1998)

(a) Definitions. As used in this clause--

"Approved purchasing system" means a Contractor's purchasing system that has been reviewed and approved in accordance with Part 44 of the Federal Acquistion Regulation (FAR).

"Consent of subcontract" means the Contracting Officer's written consent for the Contractor to enter into a particular subcontract.

"Subcontract," means any contract, as defined in FAR Subpart 2.1, entered into by a subcontractor to furnish supplies or sevices for performance of the the prime contract or a subcontract. It includes, but is not limited to purchase orders, and changes and modifications to purchase orders.

(b) This clause does not apply to subcontracts for special test equipment when the contract contains the clause at FAR 52.245-18, Special Test Equipment.

(c) When this clause is included in a fixed-price type contract, consent to subcontract is required only on unpriced contract actions (including unpriced modification or unpriced delivery orders), and only if required in accordance with paragraph (d) or (e) of this clause.

(d) If the Contractor does not have an approved purchasing system, consent to subcontract is required for any subcontract that--

(1) Is of the cost-reimbursement, time-and-materials, or labor-hour type; or

(2) Is fixed-price and exceeds--

(i) For a contract awarded by the Department of Defense, the Coast Guard, or the National Aeronautics and Space Administration, the greater of the simplified theshold or 5 percent of the total estimated cost of the contract; or

(ii) For a contract awarded by a civilian agency other that the Coast Guard and the National Aeronautics and Space Administration, either the the simplified theshold or 5 percent of the total estimated cost of the contract.

(e) If the Contractor has an approved purchasing system, the Contractor nevertheless shall obtain the Contracting Officer's written consent before placing the following subcontracts:

_____
_____
_____

(f)(1) The Contractor shall notify the Contracting Officer reasonably in advance of placing any subcontract or modification thereof for which consent is required under paragraph (c), (d), or (e) of this clause, including the following information:

(i) A description of the supplies or services to be subcontracted.

(ii) Identification of the type of subcontract to be used.
(iii) Identification of the proposed subcontractor.
(iv) The proposed subcontract price.
(v) The subcontractor's current, complete, and accurate cost or pricing data and Certificate of Current Cost or Pricing Data, if required by other contract provisions.
(vi) The subcontractor's Disclosure Statement or Certificate relating to Cost Accounting Standards when such data are required by other provisions of this contract.
(vii) A negotiation memorandum reflecting--
(A) The principal elements of the subcontract price negotiations;
(B) The most significant considerations controlling establishment of initial or revised prices;
(C) The reason cost or pricing data were or were not required;
(D) The extent, if any, to which the Contractor did not rely on the subcontractor's cost or pricing data in determining the price objective and in negotiating the final price;
(E) The extent to which it was recognized in the negotiation that the subcontractor's cost or pricing data were not accurate, complete, or current; the action taken by the Contractor and subcontractor; and the effect of any such defective data on the total price negotiated;
(F) The reasons for any significant difference between the Contractor's price objective and the price negotiated; and
(G) A complete explanation of the incentive fee or profit plan when incentives are used. The explanation shall identify each critical performance element, management decisions used to quantify each incentive element, reasons for the incentives, and a summary of all trade-off possibilities considered.
(2) The Contractor is not required to notify the Contracting Officer in advance of entering into any subcontract for which consent is not required under paragraph (c), (d), or (e) of this clause.
(g) Unless the consent or approval specifically provides otherwise, neither consent by the Contracting Officer to any subcontract nor approval of the Contractor's purchasing system shall constitute a determination--
(1) Of the acceptability of any subcontract terms or conditions;
(2) Of the acceptability of any cost under this contract; or
(3) To relieve the Contractor of any responsibility for performing this contract.
(h) No subcontract or modification thereof placed under this contract shall provide for payment on a cost-plus-a-percentage-of-cost basis, and any fee payable under cost-reimbursement subcontracts shall not exceed the fee limitations in FAR 15.404-4(c)(4)(i).
(i) The Contractor shall give the Contracting Officer immediate written notice of any action or suit filed and prompt notice of any claim made against the Contractor by any subcontractor or vendor that, in the opinion of the Contractor, may result in litigation related in any way to this contract, with respect to which the Contractor may be entitled to reimbursement by the Government.
(j) The Government reserves the right to review the Contractor's purchasing system as set forth in FAR Subpart 44.3.
(k) Paragraphs (d) and (f) of this clause do not apply to the following subcontracts, which ere evaluated during negotiations:

_____
_____
_____
(End of clause)

125. *FAR 52.244-4 SUBCONTRACTORS AND OUTSIDE ASSOCIATES AND CONSULTANTS (ARCHITECT-ENGINEER SERVICES) (AUG 1998)

Any subcontractors and outside associates or consultants required by the Contractor in connection with the services covered by the contract will be limited to individuals or firms that were specifically identified and agreed to during negotiations. The Contractor shall obtain the Contracting Officer's written consent before making any substitution for these subcontractors, associates, or consultants. (End of clause)

126. FAR 52.244-6 SUBCONTRACTS FOR COMMERCIAL ITEMS (APR 2003)

(a) *Definitions.* As used in this clause—

"Commercial item" has the meaning contained in the clause at 52.202-1, Definitions.

"Subcontract" includes a transfer of commercial items between divisions, subsidiaries, or affiliates of the Contractor or subcontractor at any tier.

(b) To the maximum extent practicable, the Contractor shall incorporate, and require its subcontractors at all tiers to incorporate, commercial items or nondevelopmental items as components of items to be supplied under this contract.

(c)(1) The Contractor shall insert the following clauses in subcontracts for commercial items:

(i) 52.219-8, Utilization of Small Business Concerns (Oct 2000) (15 U.S.C. 637(d)(2) and (3)), in all subcontracts that offer further subcontracting opportunities. If the subcontract (except subcontracts to small business concerns) exceeds $500,000 ($1,000,000 for construction of any public facility), the subcontractor must include 52.219-8 in lower tier subcontracts that offer subcontracting opportunities.

(ii) 52.222-26, Equal Opportunity (Apr 2002) (E.O. 11246).

(iii) 52.222-35, Equal Opportunity for Special Disabled Veterans, Veterans of the Vietnam Era, and Other Eligible Veterans (Dec 2001) (38 U.S.C. 4212(a));

(iv) 52.222-36, Affirmative Action for Workers with Disabilities (June 1998) (29 U.S.C. 793).

(v) 52.247-64, Preference for Privately Owned U.S.-Flag Commercial Vessels (APR 2003) (46 U.S.C. Appx 1241 and 10 U.S.C. 2631) (flow down required in accordance with paragraph (d) of FAR clause 52.247-64).

(2) While not required, the Contractor may flow down to subcontracts for commercial items a minimal number of additional clauses necessary to satisfy its contractual obligations.

(d) The Contractor shall include the terms of this clause, including this paragraph (d), in subcontracts awarded under this contract. (End of clause)

127. *FAR 52.245-2 GOVERNMENT PROPERTY (FIXED-PRICE CONTRACTS) (JUNE 2003) [For Government Property over $100,000]

(a) Government-furnished property.

(1) The Government shall deliver to the Contractor, for use in connection with and under the terms of this contract, the Government-furnished property described in the Schedule or specifications together with any related data and information that the Contractor may request and is reasonably required for the intended use of the property (hereinafter referred to as "Government-furnished property").

(2) The delivery or performance dates for this contract are based upon the expectation that Government-furnished property suitable for use (except for property furnished "as is") will be delivered to the Contractor at the times stated in the Schedule or, if not so stated, in sufficient time to enable the Contractor to meet the contract's delivery or performance dates.

(3) If Government-furnished property is received by the Contractor in a condition not suitable for the intended use, the Contractor shall, upon receipt of it, notify the Contracting Officer, detailing the facts, and, as directed by the Contracting Officer and at Government expense, either repair, modify, return, or otherwise dispose of the property. After completing the directed action and upon written request of the Contractor, the Contracting Officer shall make an equitable adjustment as provided in paragraph (h) of this clause.

(4) If Government-furnished property is not delivered to the Contractor by the required time, the Contracting Officer shall, upon the Contractor's timely written request, make a determination of the delay, if any, caused the Contractor and shall make an equitable adjustment in accordance with paragraph (h) of this clause.

(b) Changes in Government-furnished property.

(1) The Contracting Officer may, by written notice,

(i) decrease the Government-furnished property provided or to be provided under this contract, or

(ii) substitute other Government-furnished property for the property to be provided by the Government, or to be acquired by the Contractor for the Government, under this contract. The Contractor shall promptly take such action as the Contracting Officer may direct regarding the removal, shipment, or disposal of the property covered by such notice.

(2) Upon the Contractor's written request, the Contracting Officer shall make an equitable adjustment to the contract in accordance with paragraph (h) of this clause, if the Government has agreed in the Schedule to make the property available for performing this contract and there is any--

(i) Decrease or substitution in this property pursuant to subparagraph (b)(1) above; or

(ii) Withdrawal of authority to use this property, if provided under any other contract or lease.

(c) Title in Government property. (1) The Government shall retain title to all Government-furnished property.

(2) All Government-furnished property and all property acquired by the Contractor, title to which vests in the Government under this paragraph (collectively referred to as "Government property"), are subject to the provisions of this clause. However, special tooling accountable to this contract is subject to the provisions of the Special Tooling clause and is not subject to the provisions of this clause. Title to Government property shall not be affected by its incorporation into or attachment to any property not owned by the Government, nor shall government property become a fixture or lose its identity as personal property by being attached to any real property.

(3) Title to each item of facilities and special test equipment acquired by the Contractor for the Government under this contract shall pass to and vest in the Government when its use in performing this contract commences or when the Government has paid for it, whichever is earlier, whether or not title previously vested in the Government.

(4) If this contract contains a provision directing the Contractor to purchase material for which the Government will reimburse the Contractor as a direct item of cost under this contract--

(i) Title to material purchased from a vendor shall pass to and vest in the Government upon the vendor's delivery of such material; and

(ii) Title to all other material shall pass to and vest in the Government upon--

(A) Issuance of the material for use in contract performance;

(B) Commencement of processing of the material or its use in contract performance; or

(C) Reimbursement of the cost of the material by the Government, whichever occurs first.

(d) Use of Government property. The Government property shall be used only for performing this contract, unless otherwise provided in this contract or approved by the Contracting Officer.

(e) Property Administration.

(1) The Contractor shall be responsible and accountable for all Government property provided under this contract and shall comply with Federal Acquisition Regulation (FAR) Subpart 45.5, as in effect on the date of this contract.

(2) The Contractor shall establish and maintain a program for the use, maintenance, repair, protection, and preservation of Government property in accordance with sound industrial practice and the applicable provisions of Subpart 45.5 of the FAR.

(3) If damage occurs to Government property, the risk of which has been assumed by the Government under this contract, the Government shall replace the items or the Contractor shall make such repairs as the Government directs. However, if the Contractor cannot effect such repairs within the time required, the Contractor shall dispose of the property as directed by the Contracting Officer. When any property for which the Government is responsible is replaced or repaired, the Contracting Officer shall make an equitable adjustment in accordance with paragraph (h) of this clause.

(4) The Contractor represents that the contract price does not include any amount for repairs or replacement for which the Government is responsible. Repair or replacement of property for which the Contractor is responsible shall be accomplished by the Contractor at its own expense.

(f) Access. The Government and all its designees shall have access at all reasonable times to the premises in which any Government property is located for the purpose of inspecting the Government property.

(g) Risk of loss. Unless otherwise provided in this contract, the Contractor assumes the risk of, and shall be responsible for, any loss or destruction of, or damage to, Government property upon its delivery to the Contractor or upon passage of title to the Government under paragraph (c) of this clause. However, the Contractor is not responsible for reasonable wear and tear to Government property or for Government property properly consumed in performing this contract.

(h) Equitable adjustment. When this clause specifies an equitable adjustment, it shall be made to any affected contract provision in accordance with the procedures of the Changes clause. When appropriate, the Contracting Officer may initiate an equitable adjustment in favor of the Government. The right to an equitable adjustment shall be the Contractor's exclusive remedy. The Government shall not be liable to suit for breach of contract for--

(1) Any delay in delivery of Government-furnished property;

(2) Delivery of Government-furnished property in a condition not suitable for its intended use;

(3) A decrease in or substitution of Government-furnished property; or

(4) Failure to repair or replace Government property for which the Government is responsible.

(i) Final accounting and disposition of Government property. Upon completing this contract, or at such earlier dates as may be fixed by the Contracting Officer, the Contractor shall submit, in a form acceptable to the Contracting Officer, inventory schedules covering all items of Government property (including any resulting scrap) not consumed in performing this contract or delivered to the Government. The Contractor shall prepare for shipment, deliver f.o.b. origin, or dispose of the Government property as may be directed or authorized by the Contracting Officer. The net proceeds of any such disposal shall be credited to the contract price or shall be paid to the Government as the Contracting Officer directs.

(j) Abandonment and restoration of Contractor's premises. Unless otherwise provided herein, the Government--

(1) May abandon any Government property in place, at which time all obligations of the Government regarding such abandoned property shall cease; and

(2) Has no obligation to restore or rehabilitate the Contractor's premises under any circumstances (e.g., abandonment, disposition upon completion of need, or upon contract completion). However, if the Government-furnished property (listed in the Schedule or specifications) is withdrawn or is unsuitable for the intended use, or if other Government property is substituted, then the equitable adjustment under paragraph (h) of this clause may properly include restoration or rehabilitation costs.

(k) Communications. All communications under this clause shall be in writing.

(l) Overseas contracts. If this contract is to be performed outside of the United States of America and its outlying areas, the words "Government" and "Government-furnished" (wherever they appear in this clause) shall be construed as "United States Government" and "United States Government-furnished," respectively.

128. *FAR 52.245-4 GOVERNMENT-FURNISHED PROPERTY (SHORT FORM) (JUNE 2003) [For Government Property $100,000 or Less]

(a) The Government shall delivery to the Contractor, at the time and locations stated in this contract, the Government-furnished property described in the Schedule or specifications. If that property, suitable for its intended use, is not delivered to the Contractor, the Contracting Officer shall equitably adjust affected provisions of this contract in accordance with the Changed clause when--

(1) The Contractor submits a timely written request for an equitable adjustment; and

(2) The facts warrant an equitable adjustment.

(b) Title to Government-furnished property shall remain in the Government. The Contractor shall use the Government-furnished property only in connection with this contract. The Contractor shall maintain adequate property control records in accordance with sound industrial practice and will make such records available for Government inspection at all reasonable times, unless the clause at Federal Acquisition Regulation 52.245-1, Property Records, is included in this contract.

(c) Upon delivery of Government-furnished property to the Contractor, the Contractor assumes the risk and responsibility for its loss or damage, except--

(1) For reasonable wear and tear;
(2) To the extent property is consumed in performing this contract; or
(3) As otherwise provided for by the provisions of this contract.

(d) Upon completing this contract, the Contractor shall follow the instructions of the Contracting Officer regarding the disposition of all Government-furnished property not consumed in performing this contract or previously delivered to the Government. The Contractor shall prepare for shipment, deliver f.o.b. origin, or dispose of the Government property, as may be directed or authorized by the Contracting Officer. The net proceeds of any such disposal shall be credited to the contract price or shall be paid to the Government as directed by the Contracting Officer.

(e) If this contract is to be performed outside the United States of America and its outlying areas, the words "Government" and "Government-furnished" (wherever they appear in this clause) shall be construed as "United States Government" and "United States Government-furnished," respectively.

129. *FAR 52.246-12 INSPECTION OF CONSTRUCTION (AUG 1996)

(a) Definition. "Work" includes, but is not limited to, materials, workmanship, and manufacture and fabrication of components.

(b) The Contractor shall maintain an adequate inspection system and perform such inspections as will ensure that the work performed under the contract conforms to contract requirements. The Contractor shall maintain complete inspection records and make them available to the Government. All work shall be conducted under the general direction of the Contracting Officer and is subject to Government inspection and test at all places and at all reasonable times before acceptance to ensure strict compliance with the terms of the contract.

(c) Government inspections and tests are for the sole benefit of the Government and do not--
(1) Relieve the Contractor of responsibility for providing adequate quality control measures;
(2) Relieve the Contractor of responsibility for damage to or loss of the material before acceptance;
(3) Constitute or imply acceptance; or
(4) Affect the continuing rights of the Government after acceptance of the completed work under paragraph (i) below.

(d) The presence or absence of a Government inspector does not relieve the Contractor from any contract requirement, nor is the inspector authorized to change any term or condition of the specification without the Contracting Officer's written authorization.

(e) The Contractor shall promptly furnish, at no increase in contract price, all facilities,labor, and material reasonably needed for performing such safe and convenient inspections and tests as may be required by the Contracting Officer. The Government may charge to the Contractor any additional cost of inspection or test when work is not ready at the time specified by the Contractor for inspection or test, or when prior rejection makes reinspection or retest necessary. The Government shall perform all inspections and tests in a manner that will not unnecessarily delay the work. Special, full size, and performance tests shall be performed as described in the contract.

(f) The Contractor shall, without charge, replace or correct work found by the Government not to conform to contract requirements, unless in the public interest the Government consents to accept the work with an appropriate adjustment in contract price. The Contractor shall promptly segregate and remove rejected material from the premises.

(g) If the Contractor does not promptly replace or correct rejected work, the Government may
(1) by contract or otherwise, replace or correct the work and charge the cost to the Contractor or
(2) Terminate for default the Contractor's right to proceed.

(h) If, before acceptance of the entire work, the Government decides to examine already completed work by removing it or tearing it out, the Contractor, on request, shall promptly furnish all necessary facilities, labor, and material. If the work is found to be defective or nonconforming in any material respect due to the fault of the Contractor or its subcontractors, the Contractor shall defray the expenses of the examination and of satisfactory reconstruction. However, if the work is found to meet contract requirements, the Contracting Officer shall make an

equitable adjustment for the additional services involved in the examination and reconstruction, including, if completion of the work was thereby delayed, an extension of time.

(i) Unless otherwise specified in the contract, the Government shall accept, as promptly as practicable after completion and inspection, all work required by the contract or that portion of the work the Contracting Officer determines can be accepted separately. Acceptance shall be final and conclusive except for latent defects, fraud, gross mistakes amounting to fraud, or the Government's rights under any warranty or guarantee.

130. *FAR 52.246-21 WARRANTY OF CONSTRUCTION (MAR 1994)

(a) In addition to any other warranties in this contract, the Contractor warrants, except as provided in paragraph (i) of this clause, that work performed under this contract conforms to the contract requirements and is free of any defect in equipment, material, or design furnished, or workmanship performed by the Contractor or any subcontractor or supplier at any tier.

(b) This warranty shall continue for a period of 1 year from the date of final acceptance of the work. If the Government takes possession of any part of the work before final acceptance, this warranty shall continue for a period of 1 year from the date the Government takes possession.

(c) The Contractor shall remedy at the Contractor's expense any failure to conform, or any defect. In addition, the Contractor shall remedy at the Contractor's expense any damage to Government-owned or controlled real or personal property, when that damage is the result of--

(1) The Contractor's failure to conform to contract requirements; or

(2) Any defect of equipment, material, workmanship, or design furnished.

(d) The Contractor shall restore any work damaged in fulfilling the terms and conditions of this clause. The Contractor's warranty with respect to work repaired or replaced will run for 1 year from the date of repair or replacement.

(e) The Contracting Officer shall notify the Contractor, in writing, within a reasonable time after the discovery of any failure, defect, or damage.

(f) If the Contractor fails to remedy any failure, defect, or damage within a reasonable time after receipt of notice, the Government shall have the right to replace, repair, or otherwise remedy the failure, defect, or damage at the Contractor's expense.

(g) With respect to all warranties, express or implied, from subcontractors, manufacturers, or suppliers for work performed and materials furnished under this contract, the Contractor shall--

(1) Obtain all warranties that would be given in normal commercial practice;

(2) Require all warranties to be executed, in writing, for the benefit of the Government, if directed by the Contracting Officer; and

(3) Enforce all warranties for the benefit of the Government, if directed by the Contracting Officer.

(h) In the event the Contractor's warranty under paragraph (b) of this clause has expired, the Government may bring suit at its expense to enforce a subcontractor's, manufacturer's, or supplier's warranty.

(i) Unless a defect is caused by the negligence of the Contractor or subcontractor or supplier at any tier, the Contractor shall not be liable for the repair of any defects of material or design furnished by the Government nor for the repair of any damage that results from any defect in Government-furnished material or design.

(j) This warranty shall not limit the Government's rights under the Inspection and Acceptance clause of this contract with respect to latent defects, gross mistakes, or fraud.

131. DFARS 252.247-7023 TRANSPORTATION OF SUPPLIES BY SEA (MAR 2000)

(a) Definitions.

As used in this clause--

(1) "Components" means articles, materials, and supplies incorporated directly into end products at any level of manufacture, fabrication, or assembly by the Contractor or any subcontractor.

(2) 'Department of Defense" (DOD) means the Army, Navy, Air Force, Marine Corps, and defense agencies.

(3) "Foreign flag vessel" means any vessel that is not a U.S.-flag vessel.

(4) "Ocean transportation" means any transportation aboard a ship, vessel, boat, barge, or ferry through international waters.

(5) "Subcontractor" means a supplier, materialman, distributor, or vendor at any level below the prime Contractor whose contractual obligation to perform results from, or is conditioned upon, award of the prime contract and who is performing any part of the work or other requirement of the prime contract.

(6) "Supplies" means all property, except land and interests in lard, that is clearly identifiable for eventual use by or owned by the DoD at the time of transportation by sea.

(i) An item is clearly identifiable for eventual use by the DoD if, for example, the contract documentation contains a reference to a DoD contract number or a military destination.

(ii) "Supplies" includes (but is not limited to) public works; buildings and facilities; ships; floating equipment and vessels of every character, type, and description, with parts, subassemblies, accessories, and equipment; machine tools; material; equipment; stores of all kinds; end items; construction materials; and components of the foregoing.

(7) "U.S.-flag vessel" means a vessel of the United States or belonging to the United States, including any vessel registered or having national status under the laws of the United States.

(b) (1) The Contractor shall use U.S. -flag vessels when transporting any supplies by sea under this contract.

(2) A subcontractor transporting supplies by sea under this contract shall use U.S.-flag vessel if--

(i) This Contract is a construction contract; or

(ii) The supplies being transported are-

(A) Noncommercial items; or

(B) Commercial items that-

(1) The Contractor is reselling or distributing to the Government without adding value (generally, the Contractor does not add value to items that it subcontracts for f.o.b. destination shipment);

(2) Are shipped in direct support of U.S. military contingency operations, exercises, or forces deployed in humanitarian or peacekeeping operations; or

(3) Are commissary or exchange cargoes transported outside of the Defense Transportation System in accordance with 10 U.S.C. 2643.

(c) The Contractor and its subcontractors may request that the Contracting Officer authorize shipment in foreign-flag vessels, or designate available U.S.-flag vessels, if the Contractor or a subcontractor believes that--

(1) U.S.-flag vessels are not available for timely shipment;

(2) The freight charges are inordinately excessive or unreasonable; or

(3) Freight charges are higher that charges to private persons for transportation of like goods.

(d) The Contractor must submit any request for use of other than U.S.-flag vessels in writing to the Contracting Officer at least 45 days prior to the sailing date necessary to meet its delivery schedules. The Contracting Officer will process requests submitted after such date(s) as expeditiously as possible, but the Contracting Officer's failure to grant approvals to meet the shipper's sailing date will not of itself constitute a compensable delay under this or any other clause of this contract. Requests shall contain at a minimum--

(1) Type, weight, and cube of cargo;
(2) Required shipping date:
(3) Special handling and discharge requirements;
(4) Loading and discharge points;
(5) Name of shipper and consignee;
(6) Prime contract number, and
(7) A documented description of efforts made to secure U.S.-flag vessels, including points of contact (with names and telephone numbers) with at least two U.S.-flag carriers contacted. Copies of telephone notes, telegraphic and facsimile message or letters will be sufficient for this purpose.

(e) The Contractor shall, within 30 days after each shipment covered by this clause, provide the Contracting Officer and the Division of National Cargo, Office of Market Development, Maritime Administration, U.S. Department of Transportation, Washington, DC 20590, one copy of the rated on board vessel operating carrier's ocean bill of lading, which shall contain the following information--

(1) Prime contract number;
(2) Name of vessel;
(3) Vessel flag of registry;
(4) Date of loading;
(5) Port of loading;
(6) Port of final discharge;
(7) Description of commodity;
(8) Gross weight in pounds and cubic feet if available;
(9) Total ocean freight in U.S. dollars; and
(10) Name of the steamship company.

(f) The Contractor agrees to provide with its final invoice under this contract a representation that to the best of its knowledge and belief--

(1) No ocean transportation was used in the performance of this contract;
(2) Ocean transportation was used and only U.S.-flag vessels were used for all ocean shipments under the contract;
(3) Ocean transportation was used, and the Contractor had the written consent of the Contracting Officer for all non-U.S.-flag ocean transportation; or
(4) Ocean transportation was used and some or all of the shipments were made on non-U.S.-flag vessels without the written consent of the Contracting Officer. The Contractor shall describe these shipments in the following format;

ITEM DESCRIPTION	CONTRACT LINE ITEMS	QUANTITY
TOTAL		

(g) If the final invoice does not include the required representation, the Government will reject and return it to the Contractor as an improper invoice for the purposes of the Prompt Payment clause of this contract. In the event there has been unauthorized use of non-U.S.-flag vessels in the performance of this contract, the Contracting Officer is entitled to equitably adjust the contract, based on the unauthorized use.

(h) The Contractor shall include this clause, including this paragraph (h) in all subcontracts under this contract that-

(1) Exceed the simplified acquistion threshold in Part 2 of the Federal Acquisition Regulation; and
(2) Are for a type of supplies described in paragraph (b) (2) of this clause.

132. DFARS 252.247-7024 NOTIFICATION OF TRANSPORTATION OF SUPPLIES BY SEA (MAR 2000)

(a) The Contractor has indicated by the response to the solicitation provision, Representation of Extent of Transportation by Sea, that it did not anticipate transporting by sea any supplies. If, however, after the award of

this contract, the Contractor learns that supplies, as defined in the Transportation of Supplies by Sea clause of this contract, will be transported by sea, the Contractor--

(1) Shall notify the Contracting Officer of that fact; and

(2) Hereby agrees to comply with all the terms and conditions of the Transportation of Supplies by Sea clause of this contract.

(b) (1) The Contractor shall use U.S. -flag vessels when transporting any supplies by sea under this contract.

(2) A subcontractor transporting supplies by sea under this contract shall use U.S.-flag vessel if--

(i) This Contract is a construction contract; or

(ii) The supplies being transported are-

(A) Noncommercial items; or

(B) Commercial items that-

(1) The Contractor is reselling or distributing to the Government without adding value (generally, the Contractor does not add value to items that it subcontracts for f.o.b. destination shipment);

(2) Are shipped in direct support of U.S. military contingency operations, exercises, or forces deployed in humanitarian or peacekeeping operations; or

(3) Are commissary or exchange cargoes transported outside of the Defense Transportation System in accordance with 10 U.S.C. 2643.

133. FAR 52.248-3 VALUE ENGINEERING--CONSTRUCTION (FEB 2000) (ALERNATE I (APR 1984)

(a) General. The Contractor is encouraged to develop, prepare, and submit value engineering change proposals (VECP's) voluntarily. The Contractor shall share in any instant contract savings realized from accepted VECP's, in accordance with paragraph (f) of this clause.

(b) Definitions. "Collateral costs," as used in this clause, means agency costs of operation, maintenance, logistic support, or Government-furnished property.

"Collateral savings," as used in this clause, means those measurable net reductions resulting from a VECP in the agency's overall projected collateral costs, exclusive of acquisition savings, whether or not the acquisition cost changes.

"Contractor's development and implementation costs," as used in this clause, means those costs the Contractor incurs on a VECP specifically in developing, testing, preparing, and submitting the VECP, as well as those costs the Contractor incurs to make the contractual changes required by Government acceptance of a VECP.

"Government costs," as used in this clause, means those agency costs that result directly from developing and implementing the VECP, such as any net increases in the cost of testing, operations, maintenance, and logistic support. The term does not include the normal administrative costs of processing the VECP.

"Instant contract savings," as used in this clause, means the estimated reduction in Contractor cost of performance resulting from acceptance of the VECP, minus allowable Contractor's development and implementation costs, including subcontractors' development and implementation costs (see paragraph (h) of this clause).

"Value engineering change proposal (VECP)" means a proposal that--

(1) Requires a change to this, the instant contract, to implement; and

(2) Results in reducing the contract price or estimated cost without impairing essential functions or characteristics; provided, that it does not involve a change--

(i) In deliverable end item quantities only; or

(ii) To the contract type only.

(c) VECP preparation. As a minimum, the Contractor shall include in each VECP the information described in paragraphs (c) (1) through (7) of this clause. If the proposed change is affected by contractually required configuration management or similar procedures, the instructions in those procedures relating to format, identification, and priority assignment shall govern VECP preparation. The VECP shall include the following:

(1) A description of the difference between the existing contract requirement and that proposed, the comparative advantages and disadvantages of each, a justification when an item's function or characteristics are being altered, and the effect of the change on the end item's performance.

(2) A list and analysis of the contract requirements that must be changed if the VECP is accepted, including any suggested specification revisions.

(3) A separate, detailed cost estimate for

(i) the affected portions of the existing contract requirement and

(ii) the VECP. The cost reduction associated with the VECP shall take into account the Contractor's allowable development and implementation costs, including any amount attributable to subcontracts under paragraph (h) of this clause.

(4) A description and estimate of costs the Government may incur in implementing the VECP, such as test and evaluation and operating and support costs.

(5) A prediction of any effects the proposed change would have on collateral costs to the agency.

(6) A statement of the time by which a contract modification accepting the VECP must be issued in order to achieve the maximum cost reduction, noting any effect on the contract completion time or delivery schedule.

(7) Identification of any previous submissions of the VECP, including the dates submitted, the agencies and contract numbers involved, and previous Government actions, if known.

(d) Submission. The Contractor shall submit VECP's to the Resident Engineer at the worksite, with a copy to the Contracting Officer.

(e) Government action.

(1) The Contracting Officer will notify the Contractor of the status of the VECP within 45 calendar days after the contracting office receives it. If additional time is required, the Contracting Officer will notify the Contractor within the 45-day period and provide the reason for the delay and the expected date of the decision. The Government will process VECP's expeditiously; however, it will not be liable for any delay in acting upon a VECP.

(2) If the VECP is not accepted, the Contracting Officer will notify the Contractor in writing, explaining the reasons for rejection. The Contractor may withdraw any VECP, in whole or in part, at any time before it is accepted by the Government. The Contracting Officer may require that the Contractor provide written notification before undertaking significant expenditures for VECP effort.

(3) Any VECP may be accepted, in whole or in part, by the Contracting Officer's award of a modification to this contract citing this clause. The Contracting Officer may accept the VECP, even though an agreement on price reduction has not been reached, by issuing the Contractor a notice to proceed with the change. Until a notice to proceed is issued or a contract modification applied a VECP to this contract, the Contractor shall perform in accordance with the existing contract. The decision to accept or reject all or part of any VECP is a unilateral decision made solely at the discretion of the Contracting Officer.

(f) Sharing.

(1) Rates. The Government's share of savings is determined by subtracting Government costs from instant contract savings and multiplying the result by

(i) 45 percent for fixed-price contracts or

(ii) 75 percent for cost-reimbursement contracts.

(2) Payment. Payment of any share due the Contractor for use of a VECP on this contract shall be authorized by a modification to this contract to--

(i) Accept the VECP;

(ii) Reduce the contract price or estimated cost by the amount of instant contract savings; and

(iii) Provide the Contractor's share of savings by adding the amount calculated to the contract price or fee.

(g) Deleted.

(h) Subcontracts. The Contractor shall include an appropriate value engineering clause in any subcontract of $50,000 or more and may include one in subcontracts of lesser value. In computing any adjustment in this contract's price under paragraph (f) of this clause, the Contractor's allowable development and implementation costs clearly resulting from a VECP accepted by the Government under this contract, but shall

exclude any value engineering incentive payments to a subcontractor. The Contractor may choose any arrangement for subcontractor value engineering incentive payments; provided, that these payments shall not reduce the Government's share of the savings resulting from the VECP.

(i) Data. The Contractor may restrict the Government's right to use any part of a VECP or the supporting data by marking the following legend on the affected parts:

"These data, furnished under the Value Engineering--Construction clause of contract - _____, shall not be disclosed outside the Government or duplicated, used, or disclosed, in whole or in part, for any purpose other than to evaluate a value engineering change proposal submitted under the clause. This restriction does not limit the Government's right to use information contained in these data if it has been obtained or is otherwise available from the Contractor or from another source without limitations."

If a VECP is accepted, the Contractor hereby grants the Government unlimited rights in the VECP and supporting data, except that, with respect to data qualifying and submitted as limited rights technical data, the Government shall have the rights specified in the contract modification implementing the VECP and shall appropriately mark the data. (The terms "unlimited rights" and "limited rights" are defined in Part 27 of the Federal Acquisition Regulation.)

(End of Clause)

134. *FAR 52.249-2 TERMINATION FOR CONVENIENCE OF THE GOVERNMENT (FIXED-PRICE) ALTERNATE I (SEP 1996) [For Contracts Over $100,000]

(a) The Government may terminate performance of work under this contract in whole or, from time to time, in part if the Contracting Officer determines that a termination is in the Government's interest. The Contracting Officer shall terminate by delivering to the Contractor a Notice of Termination specifying the extent of termination and the effective date.

(b) After receipt of a Notice of Termination, and except as directed by the Contracting Officer, the Contractor shall immediately proceed with the following obligations, regardless of any delay in determining or adjusting any amounts due under this clause:

(1) Stop work as specified in the notice.

(2) Place no further subcontracts or orders (referred to as subcontracts in this clause) for materials, services, or facilities, except as necessary to complete the continued portion of the contract.

(3) Terminate all subcontracts to the extent they relate to the work terminated.

(4) Assign to the Government, as directed by the Contracting Officer, all right, title, and interest of the Contractor under the subcontracts terminated, in which case the Government shall have the right to settle or to pay any termination settlement proposal arising out of those terminations.

(5) With approval or ratification to the extent required by the Contracting Officer, settle all outstanding liabilities and termination settlement proposals arising from the termination of subcontracts; the approval or ratification will be final for purposes of this clause.

(6) As directed by the Contracting Officer, transfer title and deliver to the Government

(i) the fabricated or unfabricated parts, work in process, completed work, supplies, and other material produced or acquired for the work terminated, and

(ii) the completed or partially completed plans, drawings, information, and other property that, if the contract had been completed, would be required to be furnished to the Government.

(7) Complete performance of the work not terminated.

(8) Take any action that may be necessary, or that the Contracting Officer may direct, for the protection and preservation of the property related to this contract that is in the possession of the Contractor and in which the Government has or may acquire an interest.

(9) Use its best efforts to sell, as directed or authorized by the Contracting Officer, any property of the types referred to in subparagraph (b) (6) of this clause; provided, however, that the Contractor

(i) is not required to extend credit to any purchaser and

(ii) may acquire the property under the conditions prescribed by, and at prices approved by, the Contracting Officer. The proceeds of any transfer or disposition will be applied to reduce any payments to be made by the Government under this contract, credited to the price or cost of the work, or paid in any other manner directed by the Contracting Officer.

(c) The Contractor shall submit complete termination inventory schedules no later than 120 days from the effective date of termination, unless extended in writing by the Contracting Officer upon written request of the Contractor within this 120-day period.

(d) After expiration of the plant clearance period as defined in Subpart 45.6 of the Federal Acquisition Regulation, the Contractor may submit to the Contracting Officer a list, certified as to quantity and quality, of termination inventory not previously disposed of, excluding items authorized for disposition by the Contracting Officer. The Contractor may request the Government to remove those items or enter into an agreement for their storage. Within 15 days, the Government will accept title to those items and remove them or enter into a storage agreement. The Contracting Officer may verify the list upon removal of the items, or if stored, within 45 days from submission of the list, and shall correct the list, as necessary, before final settlement.

(e) After termination, the Contractor shall submit a final termination settlement proposal to the Contracting Officer in the form and with the certification prescribed by the Contracting Officer. The Contractor shall submit the proposal promptly, but no later than 1 year from the effective date of termination, unless extended in writing by the Contracting Officer upon written request of the Contractor within this 1 year period. However, if the Contracting Officer determines that the facts justify it, a termination settlement proposal may be received and acted on after 1 year or any extension. If the Contractor fails to submit the proposal within the time allowed, the Contracting Officer may determine, on the basis of information available, the amount, if any, due the Contractor because of the termination and shall pay the amount determined.

(f) Subject to paragraph (e) of this clause, the Contractor and the Contracting Officer may agree upon the whole or any part of the amount to be paid because of the termination. The amount may include a reasonable allowance for profit on work done. However, the agreed amount, whether under this paragraph (f) or paragraph (g) of this clause, exclusive of costs shown in subparagraph (g)(3) of this clause, may not exceed the total contract price as reduced by (1) the amount of payments previously made and (2) the contract price of work not terminated. The contract shall be amended, and the Contractor paid the agreed amount. Paragraph (f) of this clause shall not limit, restrict, or affect the amount that may be agreed upon to be paid under this paragraph.

(g) If the Contractor and the Contracting Officer fail to agree on the whole amount to be paid the Contractor because of the termination of work, the Contracting Officer shall pay the Contractor the amounts determined as follows, but without duplication of any amounts agreed upon under paragraph (f) of this clause:

(1) For contract work performed before the effective date of the termination, the total (without duplication of any items) of--

(i) The cost of this work;

(ii) The cost of settling and paying termination settlement proposals under terminated subcontracts that are properly chargeable to the terminated portion of the contract if not included in subdivision (g)(1)(i) of this clause; and

(iii) A sum, as profit on subdivision (g)(1)(i) of this clause, determined by the Contracting Officer under 49.202 of the Federal Acquisition Regulation, in effect on the date of this contract, to be fair and reasonable; however, if it appears that the Contractor would have sustained a loss on the entire contract had it been completed, the Contracting Officer shall allow no profit under this subdivision (iii) and shall reduce the settlement to reflect the indicated rate of loss.

(2) The reasonable costs of settlement of the work terminated, including--

(i) Accounting, legal, clerical, and other expenses reasonably necessary for the preparation of termination settlement proposals and supporting data;

(ii) The termination and settlement of subcontracts (excluding the amounts of such settlements); and

(iii) Storage, transportation, and other costs incurred, reasonably necessary for the preservation, protection, or disposition of the termination inventory.

(h) Except for normal spoilage, and except to the extent that the Government expressly assumed the risk of loss, the Contracting Officer shall exclude from the amounts payable to the Contractor under paragraph (g) of this clause, the fair value, as determined by the Contracting Officer, of property that is destroyed, lost, stolen, or damaged so as to become undeliverable to the Government or to a buyer.

(i) The cost principles and procedures of Part 31 of the Federal Acquisition Regulation, in effect on the date of this contract, shall govern all costs claimed, agreed to, or determined under this clause.

(j) The Contractor shall have the right of appeal, under the Disputes clause, from any determination made by the Contracting Officer under paragraph (e), (g), or (l) of this clause, except that if the Contractor failed to submit the termination settlement proposal within the time provided in paragraph (e) or (l), respectively, and failed to request a time extension, there is no right of appeal.

(k) In arriving at the amount due the Contractor under this clause, there shall be deducted--

(1) All unliquidated advance or other payments to the Contractor under the terminated portion of this contract;

(2) Any claim which the Government has against the Contractor under this contract; and

(3) The agreed price for, or the proceeds of sale of, materials, supplies, or other things acquired by the Contractor or sold under the provisions of this clause and not recovered by or credited to the Government.

(l) If the termination is partial, the Contractor may file a proposal with the Contracting Officer for an equitable adjustment of the price(s) of the continued portion of the contract. The Contracting Officer shall make any equitable adjustment agreed upon. Any proposal by the Contractor for an equitable adjustment under this clause shall be requested within 90 days from the effective date of termination unless extended in writing by the Contracting Officer.

(m) (1) The Government may, under the terms and conditions it prescribes, make partial payments and payments against costs incurred by the Contractor for the terminated portion of the contract, if the Contracting Officer believes the total of these payments will not exceed the amount to which the Contractor will be entitled.

(2) If the total payments exceed the amount finally determined to be due, the Contractor shall repay the excess to the Government upon demand, together with interest computed at the rate established by the Secretary of the Treasury under 50 U.S.C. App. 1215(b)(2). Interest shall be computed for the period from the date the excess payment is received by the Contractor to the date the excess is repaid. Interest shall not be charged on any excess payment due to a reduction in the Contractor's termination settlement proposal because of retention or other disposition of termination inventory until 10 days after the date of the retention or disposition, or a later date determined by the Contracting Officer because of the circumstances.

(n) Unless otherwise provided in this contract or by statute, the Contractor shall maintain all records and documents relating to the terminated portion of this contract for 3 years after final settlement. This includes all books and other evidence bearing on the Contractor's costs and expenses under this contract. The Contractor shall make these records and documents available to the Government, at the Contractor's office, at all reasonable times, without any direct charge. If approved by the Contracting Officer, photographs, microphotographs, or other authentic reproductions may be maintained instead of original records and documents.

135. *FAR 52.249-10 DEFAULT (FIXED-PRICE CONSTRUCTION) (APR 1984)

(a) If the Contractor refuses or fails to prosecute the work or any separable part, with the diligence that will insure its completion within the time specified in this contract including any extension, or fails to complete the work within this time, the Government may, by written notice to the Contractor, terminate the right to proceed with the work (or the separable part of the work) that has been delayed. In this event, the Government may take over the work and complete it by contract or otherwise, and may take possession of and use any materials, appliances, and plant on the work site necessary for completing the work. The Contractor and its sureties shall be liable for any damage to the Government resulting from the Contractor's refusal or failure to complete the work within the specified time, whether or not the Contractor's right to proceed with the work is terminated. This liability includes any increased costs incurred by the Government in completing the work.

(b) The Contractor's right to proceed shall not be terminated nor the Contractor charged with damages under this clause, if-

(1) The delay in completing the work arises from unforeseeable causes beyond the control and without the fault or negligence of the Contractor. Examples of such causes include

(i) acts of God or of the public enemy,

(ii) acts of the Government in either its sovereign or contractual capacity,

(iii) acts of another Contractor in the performance of a contract with the Government,

(iv) fires,

(v) floods,

(vi) epidemics,

(vii) quarantine restrictions,

(viii) strikes,

(ix) freight embargoes,

(x) unusually severe weather, or

(xi) delays of subcontractors or suppliers at any tier arising from unforeseeable causes beyond the control and without the fault or negligence of both the Contractor and the subcontractors or suppliers; and

(2) The Contractor, within 10 days from the beginning of any delay (unless extended by the Contracting Officer), notifies the Contracting Officer in writing of the causes of delay. The Contracting Officer shall ascertain the facts and the extent of delay. If, in the judgment of the Contracting Officer, the findings of fact warrant such action, the time for completing the work shall be extended. The findings of the Contracting Officer shall be final and conclusive on the parties, but subject to appeal under the Disputes clause.

(c) If, after termination of the Contractor's right to proceed, it is determined that the Contractor was not in default, or that the delay was excusable, the rights and obligation s of the parties will be the same as if the termination had been issued for the convenience of the Government.

(d) The rights and remedies of the Government in this clause are in addition to any other rights and remedies provided by law or under this contract.

136. ENVIRONMENTAL LITIGATION (1974 NOV OCE)

(a) If the performance of all or any part of the work is suspended, delayed, or interrupted due to an order of a court of competent jurisdiction as a result of environmental litigation, as defined below, the Contracting Officer, at the request of the Contractor, shall determine whether the order is due in any part to the acts or omissions of the Contractor or a Subcontractor at any tier not required by the terms of this contract. If it is determined that the order is not due in any part to acts or omissions of the Contractor or a Subcontractor at any tier other than as required by the terms of this contract, such suspension, delay, or interruption shall be considered as if ordered by the Contracting Officer in the administration of this contract under the terms of the "Suspension of Work" clause of this contract. The period of such suspension, delay, or interruption shall be considered unreasonable, and an adjustment shall be made for any increase in the cost of performance of this contract (excluding profit) as provided in that clause, subject to all the provisions thereof.

(b) The term "environmental litigation," as used herein, means a lawsuit alleging that the work will have an adverse effect on the environment or that the Government has not duly considered, either substantively or procedurally, the effect of the work on the environment.

137. EFARS 52.249-5000 BASIS FOR SETTLEMENT OF PROPOSALS

Actual costs will be used to determine equipment cost for a settlement proposal submitted on the total cost basis under FAR 49.206-2(b). In evaluating a termination settlement proposal using the total cost basis, the following principles will be applied to determine allowable equipment costs:

(1) Actual costs for each piece of equipment, or groups of similar serial or series equipment, need not be available in the contractor's accounting records to determine total actual equipment costs.

(2) If equipment costs have been allocated to a contract using predetermined rates, those charges will be adjusted to actual costs.

(3) Recorded job costs adjusted for unallowable and unallocable expenses will be used to determine equipment operating expenses.

(4) Ownership costs (depreciation) will be determined using the contractor's depreciation schedule (subject to the provisions of FAR 31.205-11).

(5) License, taxes, storage and insurance costs are normally recovered as an indirect expense and unless the contractor charges these costs directly to contracts, they will be recovered through the indirect expense rate.

This page was intentionally left blank for duplex printing.

DOCUMENT TABLE OF CONTENTS

DIVISION 00 - DOCUMENTS

SECTION 00800

SPECIAL CONTRACT REQUIREMENTS

5/00, Rev 11/02

PART 1 GENERAL

1.1 COMMENCEMENT, PROSECUTION, AND COMPLETION OF WORK (APR 1984)
1.1.1 Sequence of Design-Construction
1.2 LIQUIDATED DAMAGES-CONSTRUCTION (SEPT 2000)
1.3 EXCEPTION TO COMPLETION TIME AND LIQUIDATED DAMAGES
1.4 DESIGN-BUILD CONTRACT - ORDER OF PRECEDENCE
1.5 RESPONSIBLITY OF THE CONTRACTOR FOR DESIGN
1.6 SUBMITTALS
1.7 PHYSICAL DATA (APR 1984)
1.8 PAYMENT
1.8.1 PROMPT PAYMENT ACT
1.8.2 PAYMENTS FOR MODIFICATIONS
1.8.3 PAYMENT FOR MATERIALS DELIVERED OFFSITE (MAR 1995)
1.9 AVAILABILITY OF UTILITY SERVICES
1.10 UTILITY SERVICE INTERRUPTIONS
1.11 DIGGING PERMITS AND ROAD CLOSINGS
1.12 TIME EXTENSIONS FOR UNUSUALLY SEVERE WEATHER
1.13 INSURANCE REQUIRED
1.14 SECURITY REQUIREMENTS
1.14.1 Work inside the Secure Area.
1.14.2 Work outside the Secure Area.
1.15 CONTRACTOR QUALITY CONTROL
1.16 NONDOMESTIC CONSTRUCTION MATERIALS
1.17 NOTICE OF PRIORITY RATING FOR NATIONAL DEFENSE USE (SEP 1990)
1.18 DAILY WORK SCHEDULES
1.19 EQUIPMENT OWNERSHIP AND OPERATING EXPENSE SCHEDULE (MAR 1995)
1.20 AS-BUILT DRAWINGS
1.21 SIGN
1.22 EQUIPMENT ROOM DRAWINGS
1.23 CONTRACTOR FURNISHED EQUIPMENT DATA
1.24 ACCOMMODATIONS FOR GOVERNMENT INSPECTORS
1.25 PERFORMANCE OF WORK BY CONTRACTOR (APR 1984)
1.26 PARTNERING
1.27 PROFIT
1.28 LABOR CONDITIONS APPLICABLE TO TEMPORARY FACILITIES
1.29 DRAWING SCALES
1.30 (FAR 52.219-6)NOTICE OF TOTAL SMALL BUSINESS SET-ASIDE (JUL 1996)
1.31 WAGE RATE APPLICATION
1.31.1 Building Schedule
1.31.2 Heavy Schedule
1.31.3 Highway Schedule
1.32 (FAR 52.222-23) NOTICE OF REQUIREMENT FOR AFFIRMATIVE ACTION TO ENSURE EQUAL EMPLOYMENT OPPORTUNITY FOR CONSTRUCTION (FEB 1999))
1.33 FEDERAL HOLIDAYS
1.34 BASE HOURS

1.35 APPLICATION OF "VALUE ENGINEERING" CLAUSE

PART 2 NOT USED

PART 3 NOT USED

-- End of Document Table of Contents --

SECTION 00800

SPECIAL CONTRACT REQUIREMENTS
5/00, Rev 11/02

PART 1 GENERAL

Attachments:
General Wage Decision Nos. CO030006 (BUILDING); CO030012 (HEAVY)
Construction Signage

1.1 COMMENCEMENT, PROSECUTION, AND COMPLETION OF WORK (APR 1984)

The Contractor shall be required to (a) commence work under this contract within ten (10) calendar days after the date of receipt by him of Notice to Proceed, (b) prosecute said work diligently, and (c) complete the entire work ready for use not later than the number of calendar days (which includes design, design reviews and all construction activities) indicated by the Contractor on the awarded Standard Form SF 1442 (Page 00010-1) for this contract. The time stated for completion of the project shall include final cleanup of the premises. (FAR 52.211-10)

1.1.1 Sequence of Design-Construction

(a) After receipt of the Contract Notice to Proceed (NTP), the Contractor shall initiate design, comply with all design submission requirements as covered in Division 01 General Requirements of the advertised Solicitation, and obtain Government review of each submission. No construction may be started until the Government reviews the 100 Percent Corrected Design submission and determines it satisfactory for purposes of beginning construction. The Contractor has the option to submit the design as an entirely complete design package (design analysis, plans,and specifications and other design deliverables) or as two (2) separate complete design packages (design analysis, plans,and specifications and other design deliverables), one for the site work, foundations, and utilities and one for all other work. Each package will require the same design submittals, design reviews and design review conferences as set forth in the Contract. The Government will not grant any time extension for any design resubmittal required when, in the opinion of the Contracting Officer, the initial submission failed to meet the minimum quality requirements as set forth in the Contract.

(b) If the Government allows the Contractor to proceed with limited construction based on pending minor revisions to the reviewed 100 Percent Corrected Design submission, no payment will be made for any in-place construction related to the pending revisions until they are completed, resubmitted and are satisfactory to the Government. Proceeding with limited construction requires written authorization by the Contracting Officer.

1.2 LIQUIDATED DAMAGES-CONSTRUCTION (SEPT 2000)

(a) If the Contractor fails to complete the work within the time inserted in Item 11 on page 00010-1 of Standard Form 1442, the Contractor shall pay liquidated damages to the Government in the amount of $790.00 for each calendar day of delay until the work is completed

or accepted.

(b) If the Government terminates the Contractor's right to proceed, liquidated damages will continue to accrue until the work is completed. These liquidated damages are in addition to excess costs of repurchase under the Termination clause. (FAR 52.211-12)

1.3 EXCEPTION TO COMPLETION TIME AND LIQUIDATED DAMAGES

In case the Contracting Officer determines that seeding, sodding, and/or planting and/or the specified maintenance thereof is not feasible during the construction period, such work will be excepted from the completion time and liquidated damages . This work shall be accomplished during the first seeding, sodding, and/or planting period and the specified maintenance period following the completion date.

1.4 DESIGN-BUILD CONTRACT - ORDER OF PRECEDENCE

(a) The contract includes the standard contract clauses and schedules current at the time of contract award. It entails (1) the solicitation in its entirety, including all drawings, cuts, and illustrations, and any amendments, and (2) the successful offeror's accepted proposal. The contract constitutes and defines the entire agreement between the Contractor and the Government. No documentation shall be omitted which in any way bears upon the terms of that agreement.

(b) In the event of conflict or inconsistency between any of the provisions of this contract, precedence shall be given in the following order:

(1) Betterments: Any portion of the accepted proposal, which both conform to and exceed the provisions of the solicitation. "Betterment" is defined as any product, component, or system, which exceeds the requirements stated in the solicitation.

(2) The provisions of the solicitation. (See also Contract Clause entitled "SPECIFICATIONS AND DRAWINGS FOR CONSTRUCTION".)

(3) All other provisions of the accepted proposal.

(4) Any design products including, but not limited to, plans, specifications, engineering studies and analyses, shop drawings, equipment installation drawings, etc.. These are "deliverable" under the contract and are not part of the contract itself. Design products must conform with all the provisions of the contract, in the order of precedence herein.

(c) Where conflicts between the solicitation requirements and the UFGS guide specifications (available as indicated in Section 01332 DESIGN AND CONSTRUCTION DELIVERABLES) exist, the solicitation requirements shall take precedence. Any installation requirements within solicitation requirements, but not contained in the UFGS guide specifications, shall be added to the specifications or shown on the drawings.

1.5 RESPONSIBLITY OF THE CONTRACTOR FOR DESIGN

(a) The Contractor shall be responsible for the professional quality, technical accuracy, and the coordination of all designs, drawings, specifications, and any other non-construction services furnished by the Contractor under this contract. The Contractor shall, without additional

compensation, correct or revise any errors or deficiency in its designs, drawings, spececifications, and other non-construction services.

(b) Neither the Government's review, approval or acceptance of, nor payment for, the services required under this contract shall be construed to operate as a waiver of any rights under this contract or any cause of action arising out of the performance of this contract, and the Contractor shall be and remain liable to the Government in accordance with applicable law for all damages to the Government caused by the Contractor's negligent performance of any of the services described in paragraph (a) furnished under this contract.

(c) The rights and remedies of the Government provided under this contract are in addition to any other rights and remedies provided by law.

1.6 SUBMITTALS

Government approval is required for submittals with a "G" designation; submittals not having a "G" designation are for information only. When used, a designation following the "G" designation identifies the office that will review the submittal for the Government. The following shall be submitted in accordance with Section 01330 SUBMITTAL PROCEDURES:

SD-02 Shop Drawings

Equipment Room Drawings; G-AO.

This submittal is not required during construction, if equipment room drawings are shown on the 100 percent design submittal.

1.7 PHYSICAL DATA (APR 1984)

Data and information furnished or referred to below is for the Contractors' information. The Government shall not be responsible for any interpretation of or conclusion drawn from the data or information by the Contractor.

a. The indications of physical conditions on the drawings and in the specifications are the result of site investigations by surveys and auger borings. The data shown graphically and by symbol for each respective boring represents the actual geologic features observed and logged at the location given on the drawings. While the borings are representative of subsurface conditions at their respective locations and for their respective vertical reaches, local minor variations characteristic of the subsurface materials of this region could occur.

b. Weather conditions shall have been investigated by the Contractor to satisfy himself as to the hazards likely to arise therefrom. Complete weather records and reports may be obtained from the local U.S. Weather Bureau.

c. Transportation facilities shall have been investigated by the Contractor to satisfy himself as to the existence of access highways and railroad facilities. (FAR 52.236-4)

1.8 PAYMENT

1.8.1 PROMPT PAYMENT ACT

Pay requests authorized in CONTRACT CLAUSES clause: "Payments Under Fixed-Price Construction Contracts", will be paid pursuant to the clause, "Prompt Payment for Construction Contracts". Pay requests will be submitted on ENG Form 93 and 93a, "Payment Estimate-Contract Performance" and "Continuation". All information and substantiation required by the identified contract clauses will be submitted with the ENG Form 93, and the required certification will be included on the last page of the ENG Form 93a, signed by an authorized contractor official and dated when signed. The designated billing office is the Office of the Area Engineer.

1.8.2 PAYMENTS FOR MODIFICATIONS

Payments may be made for cost bearing change orders within the scope of the contract only to the extent funds are authorized in the order on a two-part modification. Contractor pricing proposed must be submitted at the earliest possible time after the change order is issued, or at a specific time as directed by the Contracting Officer. At the discretion of the Contracting Officer, any and all payments may be withheld on the modification until the Contractor has submitted a qualifying price proposal, in as much detail as required by the Contracting Officer, and the final price has been agreed.

1.8.3 PAYMENT FOR MATERIALS DELIVERED OFFSITE (MAR 1995)

a. Pursuant to FAR clause 52.232-5, Payments Under Fixed Priced Construction Contracts, materials delivered to the contractor at locations other than the site of the work may be taken into consideration in making payments if included in payment estimates and if all the conditions of the General Provisions are fulfilled. Payment for items delivered to locations other than the work site will be limited to: (1) materials required by the technical provisions; or (2) materials that have been fabricated to the point where they are identifiable to an item of work required under this contract.

b. Such payment will be made only after receipt of paid or receipted invoices or invoices with canceled check showing title to the items in the prime contractor and including the value of material and labor incorporated into the item. Payment for materials delivered off-site includes petroleum products. (EFAR 52.232-5000)

1.9 AVAILABILITY OF UTILITY SERVICES

The Contractor shall arrange with the local utility company for electricity required by him for construction under this project and shall pay all costs in connection therewith. Reasonable amounts of domestic water will be made available to the Contractor by the Government from existing system outlets and supplies. The Contractor shall meter the amount of water used by him, and such amount of water will be paid for by or charged to the Contractor. The Contractor shall, at his own expense, make all temporary connections and install distribution lines. The Contractor shall furnish to the Contracting Officer a complete system layout drawing showing type of materials to be used and method of installation for all temporary electrical systems. All temporary lines shall be maintained by the Contractor in a workmanlike manner satisfactory to the Contracting Officer and shall be removed by the Contractor in like manner prior to final acceptance of the construction. Normal quantities of electricity and water used to make final tests of completely installed systems shall be furnished by the Government.

1.10 UTILITY SERVICE INTERRUPTIONS

The Contractor shall submit written notification not less than 15 calendar days in advance of each interruption of each utility and communication service to or within existing buildings and facilities being used by others. No single outage will exceed 4 hours unless approved in writing. The time and duration of all outages will be coordinated and approved with the Using Agency by the Contracting Officer.

1.11 DIGGING PERMITS AND ROAD CLOSINGS

The Contractor shall be responsible for securing digging permits. The Contractor will be provided a blank AF Form 103 and shall be responsible for signatures and coordination with communications, fire department, plumbing shop, electrical shop, grounds shop, environmental, safety, security police, base operations and any affected public utility. Work on or near roadways shall be flagged in accordance with the safety requirements in Safety and Health Requirements Manual EM 385-1-1, which forms a part of these specifications.Roads shall not be closed at any time for utility work. All utilities crossing beneath any paved road will be installed via boring and jacking.

1.12 TIME EXTENSIONS FOR UNUSUALLY SEVERE WEATHER

a. This clause specifies the procedure for the determination of time extensions for unusually severe weather in accordance with the contract clause entitled "Default: (Fixed-Price Construction)." In order for the Contracting Officer to award a time extension under this clause, the following conditions must be satisfied:

(1) The weather experienced at the project site during the contract period must be found to be unusually severe, that is, more severe than the adverse weather anticipated for the project location during any given month.

(2) The unusually severe weather must actually cause a delay to the completion of the project. The delay must be beyond the control and without the fault or negligence of the contractor.

b. The following schedule of monthly anticipated adverse weather delays is based on National Oceanic and Atmospheric Administration (NOAA) or similar data for the project location and will constitute the base line for monthly weather time evaluations. The contractor's progress schedule must reflect these anticipated adverse weather delays in all weather dependent activities.

MONTHLY ANTICIPATED ADVERSE WEATHER DELAY
WORK DAYS BASED ON (5) DAY WORK WEEK

JAN	FEB	MAR	APR	MAY	JUN	JUL	AUG	SEP	OCT	NOV	DEC
(08)	(05)	(04)	(04)	(06)	(04)	(07)	(05)	(03)	(02)	(03)	(06)

c. Upon acknowledgment of the Notice to Proceed (NTP) and continuing throughout the contract, the contractor will record on the daily CQC report, the occurrence of adverse weather and resultant impact to normally scheduled work. Actual adverse weather delay days must prevent work on critical activities for 50 percent or more of the contractor's scheduled work day. The number of actual adverse weather delay days shall include

days impacted by actual adverse weather (even if adverse weather occurred in previous month), be calculated chronologically from the first to the last day of each month, and be recorded as full days. If the number of actual adverse weather delay days exceeds the number of days anticipated in paragraph b. above, the contracting officer will convert any qualifying delays to calendar days, giving full consideration for equivalent fair weather work days, and issue a modification in accordance with the contract clause entitled "Default (Fixed Price Construction)". (ER 415-1-15)

1.13 INSURANCE REQUIRED

In accordance with CONTRACT CLAUSES clause: "Insurance Work on a Government Installation," the Contractor shall procure the following minimum insurance:

Type	Amount
Workmen's Compensation and Employer's Liability Insurance	$100,000
General Liability Insurance	$500,000 per occurrence
Automobile Liability Insurance	
Bodily injury	$200,000 per person and $500,000 per occurrence
Property damage	$ 20,000 per occurrence

(Coverages per FAR 28.307-2)

1.14 SECURITY REQUIREMENTS

The Contractor shall be responsible for furnishing to each employee and for requiring each employee engaged on the work to display such identification as may be approved and directed by the Contracting Officer. All prescribed identification shall immediately be delivered to the Contracting Officer, for cancellation upon release of any employees. When the contract involves work in restricted security areas, only employees who are U.S. citizens will be permitted to enter. Proof of U.S. citizenship is required prior to entry. When required by the Contracting Officer, the Contractor shall obtain and submit fingerprints of all persons employed or to be employed on the project. (Based on FAR 52.204-2)

1.14.1 Work inside the Secure Area.

For all work inside the secure area, see Section 01510 SPECIAL SECURITY (SCHRIEVER AFB).

1.14.2 Work outside the Secure Area.

For work outside the secure area, the Contractor and his employees shall be responsible for obtaining vehicle passes for all vehicles entering the base. All vehicles entering Schriever AFB shall be required to display a vehicle pass issued at the Pass and Registration Building. To obtain the vehicle pass, the vehicle operator must have in his possession ac current, valid driver's license, current vehicle registration, and current proof of insurance. Procedures for obtaining these passes and additional security procedures will be identified at the Pre-Construction Meeting.

1.15 CONTRACTOR QUALITY CONTROL

See Section 01451A Contractor Quality Control.

1.16 NONDOMESTIC CONSTRUCTION MATERIALS

The List of nondomestic construction materials or their components included in the list set forth in paragraph 25.104 of the Federal Acquisition Regulation does not apply to the requirements of the contract clause entitled "Buy American Act Construction Materials".

1.17 NOTICE OF PRIORITY RATING FOR NATIONAL DEFENSE USE (SEP 1990)

Any contract awarded as a result of this solicitation will be a DO rated order certified for national defense use under the Defense Priorities and Allocations System (DPAS) (15 CFR 700), and the Contractor will be required to follow all of the requirements of this regulation. (FAR 52.211-14)

1.18 DAILY WORK SCHEDULES

In order to closely coordinate work under this contract, the Contractor shall prepare a written agenda/meeting minutes and attend a weekly coordination meeting with the Contracting Officer and Using Service at which time the Contractor shall submit for coordination and approval, his proposed daily work schedule for the next two week period. The Contractor shall provide a copy of modifications (MODs), Serial Letters, Requests for Information (RFIs)and any other innformation that is needed in the minutes of the meeting. Required temporary utility services, time and duration of interruptions, and protection of adjoining areas shall be included with the Contractor's proposed 2-week work schedule. At this meeting, the Contractor shall also submit his schedule of proposed dates and times of all preparatory inspections to be performed during the next 2 weeks. The items of work listed on the proposed 2-week schedule are to be keyed to the NAS by activity number and description for each activity anticipated to be performed during the next 2-week period. Coordination action by the Contracting Officer relative to these schedules will be accomplished during these weekly meetings. Daily reports shall be completed and given to the Contracting Officer or Representative within 24 hours of work.

1.19 EQUIPMENT OWNERSHIP AND OPERATING EXPENSE SCHEDULE (MAR 1995)

a. This statement shall become operative only for negotiated contracts where cost or pricing data is requested, and for modifications to sealed bid or negotiated contracts where cost or pricing data is requested. This clause does not apply to terminations. See 52.249-5000, Basis for settlement of proposals and FAR Part 49.

b. Allowable cost for construction and marine plant and equipment in sound workable condition owned or controlled and furnished by a Contractor or subcontractor at any tier shall be based on actual cost data for each piece of equipment or groups of similar serial and series for which the Government can determine both ownership and operating costs from the Contractor's accounting records. When both ownership and operating costs cannot be determined for any piece of equipment or groups of similar serial or series of equipment from the Contractor's accounting records, costs for that equipment shall be based upon the applicable provisions of EP 1110-1-8, "Construction Equipment Ownership and Operating Expense Schedule," Region V. Copies of each regional schedule may be obtained through the following internet site: http://www.usace.army.mil/inet/usace-docs/eng-pamphlets/ep.htm. Working conditions shall be considered to be average for determining equipment

rates using the schedule unless specified otherwise by the Contracting Officer. For equipment not included in the schedule, rates for comparable pieces of equipment may be developed using the formula provided in the schedule. For forward pricing, the Schedule in effect at the time of negotiations shall apply. For retrospective pricing, the Schedule in effect at the time the work was performed shall apply.

c. Equipment rental costs are allowable, subject to the provisions of FAR 31.105(d)(ii) and FAR 31.205-36. Rates for equipment rented from an organization under common control, lease-purchase arrangements, and sale-leaseback arrangements will be determined using the schedule, except that actual rates will be used for equipment leased from an organization under common control that has an established practice of leasing the same or similar equipment to unaffiliated lessees.

d. When actual equipment costs are proposed and the total amount of the pricing action exceeds the small purchase threshold, the contracting officer shall request the contractor to submit either certified cost or pricing data, or partial/limited data as appropriate. The data shall be submitted on Standard Form 1411, Contract Pricing Proposal Cover Sheet. (EFARS 52.231-5000)

1.20 AS-BUILT DRAWINGS

See SECTION 01040 - AS-BUILT DRAWINGS

1.21 SIGN

On commencement of work on this project, the Contractor shall furnish and erect the temporary sign in the location selected by the Contracting Officer near the project site. The Contractor shall maintain the sign in good condition through the project construction period. Upon completion of the project the Contractor shall remove the sign from the premises. The project sign shall conform to to the requirements Omaha District Standard Drawing C-8.10, PROJECT SIGN DETAILS. A decal of the "Engineer Castle" and the U. S. Air Force emblem will be furnished the Contractor upon request.

1.22 EQUIPMENT ROOM DRAWINGS

Prior to construction, the Contractor shall prepare and submit room plans (see paragraph SUBMITTALS for conditions regarding this submittal under Design/Build procurement) for all mechanical, electrical, and communication rooms or similar areas. The plans shall be consolidated for all trades, shall be to scale, and shall show all pertinent structural features. All equipment shall be accessible and laid out in a good design and workmanship manner and layouts for communications rooms shall be completed as early as possible. In addition, other items such as doors, windows, and cabinets required for installation and which will affect the available space, will be shown. All mechanical and electrical equipment and accessories shall be shown to scale in plan and elevation and/or section in their installed positions. All duct work and piping shall be shown.

1.23 CONTRACTOR FURNISHED EQUIPMENT DATA

See Section 01200 Warranty of Construction for Contractor Furnished Equipment Data to be submitted as part of the Warranty Equipment Booklet.

1.24 ACCOMMODATIONS FOR GOVERNMENT INSPECTORS

The Contractor shall furnish a temporary office facility approximately 10 feet x 20 feet with a minimum of 200 square feet of floor space. It shall be located where directed and shall be reserved for Government personnel only. Drinking water facilities, adequate lighting, local commercial telephone service, air-conditioning, heating equipment, and a partition enclosed chemical toilet shall be furnished and maintained by the Contractor. The office shall be furnished with one legal size filing cabinet with four drawers, one drafting table with stool, one plan rack, one desk, and three chairs. Used furniture, in good condition, will be acceptable. Entrance doors shall be equipped with a substantial lock. The Contractor shall provide janitor service, fuel for the heating facilities, electricity, telephone and water, all at no cost to the Government, except the Contractor will not be liable for Government long-distance calls. The entire facility, including furniture, will remain the property of the Contractor and shall be removed from the site after completion of the work.

1.25 PERFORMANCE OF WORK BY CONTRACTOR (APR 1984)

The Contractor shall perform on the site, and with its own organization, work equivalent to at least twenty (20) percent of the total amount of work to be performed under the contract. This percentage may be reduced by a supplemental agreement to this contract if, during performing the work, the Contractor requests a reduction and the Contracting Officer determines that the reduction would be to the advantage of the Government. (FAR 52.236-1)

1.26 PARTNERING

a. The Government intends to encourage the formation of a cohesive partnership with the Contractor. This partnership will be structured to draw on the strengths of each organization to identify and achieve reciprocal goals. The objective is effective contract performance in achieving completion within budget, on schedule and in accordance with plans and specifications. This partnership between the Contractor and the Government will be voluntary and its implementation will not be part of the contract requirements nor will it result in a change to contract price or terms.

b. It is anticipated that immediately after the preconstruction conference, the appropriate Contractor's key personnel and Government key personnel will attend a 2-3 hours informal team building workshop at the Area or Resident Office (as directed).

1.27 PROFIT

a. Weighted guidelines method of determining profit shall be used on any equitable adjustment change order or modification issued under this contract. The profit factors shall be as follows:

Factor	Rate	Weight	Value
Degree of Risk	20	See Item	
Relative difficulty of work	15	b. below	
Size of Job	15		
Period of performance	15		
Contractor's investment	5		
Assistance by Government	5		
Subcontracting	25		
	100		

b. Based on the circumstances of each procurement action, each of the above factors shall be weighted from .03 to .12 as indicated below. The value shall be obtained by multiplying the rate by the weight. The value column when totalled indicates the fair and reasonable profit percentage under the circumstances of the particular procurement.

(1) Degree of Risk. Where the work involves no risk or the degree of risk is very small, the weighting should be .03; as the degree of risk increases, the weighting should be increased up to a maximum of .12. Lump sum items will have, generally, a higher weighted value than the unit price items for which quantities are provided. Other things to consider: the portion of the work to be done by subcontractors, nature of work, where work is to be performed, reasonableness of negotiated costs, amount of labor included in costs, and whether the negotiation is before or after performance of work.

(2) Relative Difficulty of Work. If the work is most difficult and complex, the weighting should be .12 and should be proportionately reduced to .03 on the simplest of jobs. This factor is tied in to some extent with the degree of risk. Some things to consider: the nature of the work, by whom it is to be done, where, and what is the time schedule.

(3) Size of Job. All work not in excess of $100,000 shall be weighted at .12. Work estimated between $100,000 and $5,000,000 shall be proportionately weighted from .12 to .05.

(4) Periods of Performance. Jobs in excess of 24 months are to be weighted at .12. Jobs of lesser duration are to be proportionately weighted to a minimum of .03 for jobs not to exceed 30 days. No weight where additional time not required.

(5) Contractor's Investment. To be weighted from .03 to .12 on the basis of below average, average, and above average. Things to consider: amount of subcontracting, mobilization payment item, Government furnished property, equipment and facilities, and expediting assistance.

(6) Assistance by Government. To be weighted from .12 to .03 on the basis of average to above average. Things to consider: use of Government-owned property, equipment and facilities, and expediting assistance.

(7) Subcontracting. To be weighted inversely proportional to the amount of subcontracting. Where 80 percent or more of the work is to be subcontracted, the weighting is to be .03 and such weighting proportionately increased to .12 where all the work is performed by the Contractor's own forces.

1.28 LABOR CONDITIONS APPLICABLE TO TEMPORARY FACILITIES

It is the position of the Department of Defense that the Davis-Bacon Act, 40 U.S.C. 276a is applicable to temporary facilities such as batch plants, sandpits, rock quarries, and similar operations, located off the immediate site of the construction but set up exclusively to furnish required

materials for a construction project on the site of the work. Clause "Payrolls and Basic Records" of the CONTRACT CLAUSES is applicable to such operations.

1.29 DRAWING SCALES

All scales shown on the RFP project drawings are based on a standard drawing size of 28" x 40". If any other size drawings are furnished or plotted, the contractor shall adjust the scales accordingly. The Contractor shall also advise his sub-contractors of the above.

1.30 (FAR 52.219-6)NOTICE OF TOTAL SMALL BUSINESS SET-ASIDE (JUL 1996)

a. Definition. "Small business concern," as used in this clause, means a concern, including its affiliates, that is independently owned and operated, not dominant in the field of operation in which it is bidding on Government contracts, and qualified as a small business under the size standards in this solicitation.

b. General. (1) Offers are solicited only from small business concerns. Offers received from concerns that are not small business concerns shall be considered nonresponsive and will be rejected.

(1) Any award resulting from this solicitation will be made to a small business concern.

c. Agreement. A small business concern submitting an offer in its own name agrees to furnish, in performing the contract, only end items manufactured or produced by small business concerns in the United States. The term "United States" includes its territories and possessions, the Commonwealth of Puerto Rico, the trust territory of the Pacific Islands, and the District of Columbia. If this procurement is processed under simplified acquisition procedures and the total amount of this contract does not exceed $25,000, a small business concern may furnish the product of any domestic firm. This paragraph does not apply in connection with construction or service contracts.

(End of clause) FAR 52.219-6

1.31 WAGE RATE APPLICATION

1.31.1 Building Schedule

Applicable to all work required within 5 feet outside the building lines.

1.31.2 Heavy Schedule

Applicable to all work required beyond 5 feet outside the building.

1.31.3 Highway Schedule

Applicable to all work required beyond 5 feet outside the building.

1.32 (FAR 52.222-23) NOTICE OF REQUIREMENT FOR AFFIRMATIVE ACTION TO ENSURE EQUAL EMPLOYMENT OPPORTUNITY FOR CONSTRUCTION (FEB 1999))

(a) The offeror's attention is called to the Equal Opportunity clause and the Affirmative Action Compliance Requirements for Construction clause of this solicitation.

(b) The goals for minority and female participation, expressed in percentage terms for the Contractor's aggregate workforce in each trade on all construction work in the covered area, are as follows:

Goals for Minority Participation for Each Trade	Goals for Female Participation for Each Trade
10.9	6.9

These goals are applicable to all the Contractor's construction work performed in the covered area. If the Contractor performs construction work in a geographical area located outside of the covered area, the Contractor shall apply the goals established for the geographical area where the work is actually performed. Goals are published periodically in the Federal Register in notice form, and these notices may be obtained from any Office of Federal Contract Compliance Programs Office.

(c) The Contractor's compliance with Executive Order 11246, as amended, and the regulations in 41 CFR 60-4 shall be based on (1) its implementation of the Equal Opportunity clause, (2) specific affirmative action obligations required by the clause entitled "Affirmative Action Compliance Requirements for Construction," and (3) its efforts to meet the goals. The hours of minority and female employment and training must be substantially uniform throughout the length of the contract, and in each trade. The Contractor shall make a good faith effort to employ minorities and women evenly on each of its projects. The transfer of minority or female employees or trainees from Contractor to Contractor, or from project to project, for the sole purpose of meeting the Contractor's goals shall be a violation of the contract, Executive Order 11246, as amended, and the regulations in 41 CFR 60-4. Compliance with the goals will be measured against the total work hours performed.

(d) The Contractor shall provide written notification to the Deputy Assistant Secretary for Federal Contract Compliance, U.S. Department of Labor, within 10 working days following award of any construction subcontract in excess of $10,000 at any tier for construction work under the contract resulting from this solicitation. The notification shall list the -

(1) Name, address, and telephone number of the subcontractor;

(2) Employer identification number of the subcontractor;

(3) Estimated dollar amount of the subcontract;

(4) Estimated starting and completion dates of the subcontract; and

(5) Geographical area in which the subcontract is to be performed.

(e) As used in this Notice, and in any contract resulting from this solicitation, the "covered area" is Colorado Springs SMSA-1720, which El Paso county is a part of.

1.33 FEDERAL HOLIDAYS

The following Federal legal holidays are observed by this installation:

New Year's Day	1 January
Martin Luther King's Birthday	Third Monday in January
President's Day	Third Monday in February
Memorial Day	Last Monday in May
Independence Day	4 July
Labor Day	First Monday in September
Columbus Day	Second Monday in October
Veterans Day	11 November
Thanksgiving Day	Fourth Thursday in November
Christmas Day	25 December

If a wage determination applies the number of holidays specified on it, it has priority over this clause.

1.34 BASE HOURS

Base operation hours are 6:00 a.m. to 6:00 p.m. daily (Monday through Friday), excluding federal holidays. Access to the base during other times must be requested in writing from the Contracting Officer and will be granted only for extenuating circumstances.

1.35 APPLICATION OF "VALUE ENGINEERING" CLAUSE

Contract Clauses clause "Value Engineering" is only applicable to changes to perscriptive RFP criteria requirements approved by the Contracting Officer, where there are cost savings to the Government. Any other changes, resulting in cost savings, which meet or exceed the requirements of the RFP, are not applicable to the Value Engineering clause.

PART 2 NOT USED
PART 3 NOT USED

-- End of Section --

This page was intentionally left blank for duplex printing.

GENERAL DECISION CO030006 06/13/03 CO6

General Decision Number CO030006

Superseded General Decision No. CO020006

State: Colorado

Construction Type:
BUILDING

County(ies):
EL PASO

BUILDING CONSTRUCTION PROJECTS (does not include residential construction consisting of single family homes and apartments up to and including 4 stories).

Modification Number	Publication Date
0	06/13/2003

COUNTY(ies):
EL PASO

BRCO0007B 05/01/2002

	Rates	Fringes
BRICKLAYERS	21.27	6.60

CARP0001E 05/01/2003

	Rates	Fringes
CARPENTERS:		
All Other Work (Including Formbuilding/Formsetting)	22.10	6.20

ELEC0113B 01/01/2003

	Rates	Fringes
ELECTRICIANS (Including Low Voltage Wiring and Installation of Fire Alarms, Computers, Telephones and Temperature Controls)	24.10	3%+10.59

ELEV0025B 01/01/2003

	Rates	Fringes
ELEVATOR CONSTRUCTORS	26.935	9.355+a

FOOTNOTE:
a. Employer contributes 8% of basic hourly rate for over 5 years' service and 6% basic hourly rate for 6 months' to 5 years' service as Vacation Pay Credit.

SEVEN PAID HOLIDAYS: New Year's Day; Memorial Day; Independence Day; Labor Day; Thanksgiving Day; Friday after Thanksgiving Day; and Christmas Day.

ENGI0009E 05/01/2003

	Rates	Fringes
POWER EQUIPMENT OPERATORS:		
Backhoe, under 3/4 yd.	20.62	5.77
Backhoe, 3/4 yd. and over	20.77	5.77
Cranes		
50 tons and under	20.77	5.77
51 to 90 tons	20.92	5.77
91 to 140 tons	21.07	5.77
141 tons and over	21.83	5.77
Front End Loader:		
up to and including 6 cy	20.62	5.77
over 6 cubic yards	20.77	5.77
Belt & Elevating	21.07	5.77

Roller:		
self-propelled, rubber tires under 5 tons	20.27	5.77
self-propelled, all types over 5 tons	20.62	5.77
Scraper:		
single bowl under 40 cubic yards	20.77	5.77
single bowl including pups 40 cubic yards and over and tandem bowls	20.92	5.77
Water Wagon	20.77	5.77
Trackhoe	20.77	5.77

IRON0024E 08/01/2002

	Rates	Fringes
IRONWORKERS, Structural and Reinforcing	22.00	5.75

LABO0720B 05/01/2003

	Rates	Fringes
LABORERS:		
Common and Concrete/Mason Tenders	14.20	4.55

PAIN0930A 07/01/2002

	Rates	Fringes
GLAZIERS	25.00	5.55

PLAS0577C 05/01/2003

	Rates	Fringes
CEMENT MASONS/ CONCRETE FINISHERS	22.80	5.65

PLUM0058A 07/01/2002

	Rates	Fringes
PIPEFITTERS (Including HVAC pipe)& PLUMBERS (Excluding HVAC work):	24.95	7.40

ROOF0058A 05/01/2003

	Rates	Fringes
ROOFERS	17.50	3.43

SHEE0009A 07/01/2002

	Rates	Fringes
SHEET METAL WORKERS (Includes HVAC duct and		

installation of HVAC systems)	24.94	9.65

SUCO1014A 12/20/2001

	Rates	Fringes
CARPENTERS:		
Acoustical	15.02	.76
Drywall Framing/Hanging and Metal Stud Work	15.16	2.33
DRYWALL FINISHERS/TAPERS	14.42	.62
MECHANICAL INSULATORS/ ASBESTOS WORKERS (Including application of all insulating materials, protective coverings, coatings and finishings to all types of mechanical systems)	13.88	
PAINTERS:		
Brush, Roller & Spray	11.29	3.11

WELDERS - Receive rate prescribed for craft performing operation to which welding is incidental.

Unlisted classifications needed for work not included within the scope of the classifications listed may be added after award only as provided in the labor standards contract clauses (29 CFR 5.5(a)(1)(ii)).

In the listing above, the "SU" designation means that rates listed under that identifier do not reflect collectively bargained wage and fringe benefit rates. Other designations indicate unions whose rates have been determined to be prevailing.

WAGE DETERMINATION APPEALS PROCESS

1.) Has there been an initial decision in the matter? This can be:

* an existing published wage determination
* a survey underlying a wage determination
* a Wage and Hour Division letter setting forth a position on a wage determination matter
* a conformance (additional classification and rate) ruling

On survey related matters, initial contact, including requests for summaries of surveys, should be with the Wage and Hour Regional Office for the area in which the survey was conducted

because those Regional Offices have responsibility for the Davis-Bacon survey program. If the response from this initial contact is not satisfactory, then the process described in 2.) and 3.) should be followed.

With regard to any other matter not yet ripe for the formal process described here, initial contact should be with the Branch of Construction Wage Determinations. Write to:

Branch of Construction Wage Determinations
Wage and Hour Division
U. S. Department of Labor
200 Constitution Avenue, N. W.
Washington, D. C. 20210

2.) If the answer to the question in 1.) is yes, then an interested party (those affected by the action) can request review and reconsideration from the Wage and Hour Administrator (See 29 CFR Part 1.8 and 29 CFR Part 7). Write to:

Wage and Hour Administrator
U.S. Department of Labor
200 Constitution Avenue, N. W.
Washington, D. C. 20210

The request should be accompanied by a full statement of the interested party's position and by any information (wage payment data, project description, area practice material, etc.) that the requestor considers relevant to the issue.

3.) If the decision of the Administrator is not favorable, an interested party may appeal directly to the Administrative Review Board (formerly the Wage Appeals Board). Write to:

Administrative Review Board
U. S. Department of Labor
200 Constitution Avenue, N. W.
Washington, D. C. 20210

4.) All decisions by the Administrative Review Board are final.

END OF GENERAL DECISION

This page was intentionally left blank for duplex printing.

GENERAL DECISION CO030012 06/13/03 CO12

General Decision Number CO030012

Superseded General Decision No. CO020012

State: Colorado

Construction Type:
HEAVY

County(ies):

ADAMS	DOUGLAS	MESA
ARAPAHOE	EL PASO	PUEBLO
BOULDER	JEFFERSON	WELD
DENVER	LARIMER	

HEAVY CONSTRUCTION PROJECTS

Modification Number	Publication Date
0	06/13/2003

COUNTY(ies):

ADAMS	DOUGLAS	MESA
ARAPAHOE	EL PASO	PUEBLO
BOULDER	JEFFERSON	WELD
DENVER	LARIMER	

ASBE0028A 01/01/2003

	Rates	Fringes
ASBESTOS WORKERS/INSULATORS (Includes application of all insulating materials, protective coverings, coatings and finishings to all types of mechanical systems)	18.57	5.95

BRCO0007F 01/01/2002

	Rates	Fringes
ADAMS, ARAPAHOE, BOULDER, DENVER, DOUGLAS, AND JEFFERSON COUNTIES		
BRICKLAYERS	21.27	6.60

BRCO0007G 05/01/2002

	Rates	Fringes
EL PASO AND PUEBLO COUNTIES		
BRICKLAYERS	21.27	6.60

CARP2834A 05/01/2003

	Rates	Fringes
MILLWRIGHTS	24.49	6.66

ELEC0012D 09/01/2002

	Rates	Fringes
PUEBLO COUNTY		
ELECTRICIANS:		
Electrical work where the total cost is $200,000 or less	18.98	7.94
Electrical work where the total cost is over $200,000	23.74	7.94

ELEC0068A 06/01/2002

	Rates	Fringes
ADAMS, ARAPAHOE, BOULDER, DENVER, DOUGLAS, JEFFERSON, LARIMER, AND WELD COUNTIES		
ELECTRICIANS	26.91	8.64

ELEC0111A 09/01/2002

	Rates	Fringes
LINE CONSTRUCTION:		
Lineman	27.36	20.75%+2.30
Groundman	14.05	20.75%+2.30

ELEC0113C 01/01/2003

	Rates	Fringes
EL PASO COUNTY		
ELECTRICIANS	24.10	3%+10.59

ELEC0969B 06/01/2000

	Rates	Fringes
MESA COUNTY		
ELECTRICIANS	20.35	4%+5.14

ENGI0009A 05/01/2003

	Rates	Fringes
POWER EQUIPMENT OPERATORS:		
Blade:		
Rough	20.62	5.77
Finish	20.92	5.77
Bulldozer	20.62	5.77
Cranes:		
50 tons and under	20.77	5.77
51 to 90 tons	20.92	5.77
91 to 140 tons	21.07	5.77
141 tons and over	21.83	5.77
Forklift	20.27	5.77
Mechanic	20.77	5.77
Oiler	19.92	5.77
Roller:		
Self-propelled, rubber tires under 5 tons	20.27	5.77
Self-propelled, all types over 5 tons	20.62	5.77
Scraper:		
Single bowl under 40 cubic yards	20.77	5.77
Single bowl, including pups 40 cubic yards and over and tandem bowls	20.92	5.77
Trackhoe	20.77	5.77

IRON0024F 08/01/2002

	Rates	Fringes
IRONWORKERS:		
Structural	22.00	7.61

LABO0086A 05/01/2003

	Rates	Fringes
LABORERS:		
Pipelayer	16.29	4.25

PLUM0003E 07/01/2002

	Rates	Fringes
ADAMS, ARAPAHOE, BOULDER, DENVER, DOUGLAS (Northern half), JEFFERSON, LARIMER AND WELD COUNTIES		
PLUMBERS	26.52	6.64

PLUM0020B 07/01/2002

	Rates	Fringes
PUEBLO COUNTY		
PLUMBERS & PIPEFITTERS:		
Free Zone - 0 to 40 miles	19.85	6.81

Zone 1 - 40 miles and over: $19.85 per hour + $32.00 per day per diem will be paid on projects over 40 miles (Zone 1) measured in practical driving miles by the shortest route, beginning at 5th and Main Streets in Pueblo, Colorado, when the employee stays overnight or drives their own vehicle.

Hazardous pay: Add $2.20 per hour to base rate. Hazardous pay applies to projects at chemical plants, steel mills, cement plants, power generator plants, process piping at manufacturing plants, food processing plants, and all projects which may present a health hazard or serious personal injury.

PLUM0058B 07/01/2002

	Rates	Fringes
EL PASO AND DOUGLAS (Southern half) COUNTIES		
PLUMBERS & PIPEFITTERS	24.95	7.40

PLUM0145B 05/01/2002

	Rates	Fringes
MESA COUNTY		

PLUMBERS & PIPEFITTERS	21.28	6.45

PLUM0208J 07/01/2002

ADAMS, ARAPAHOE, BOULDER, DENVER, DOUGLAS (Northern half), LARIMER AND WELD COUNTIES

	Rates	Fringes
PIPEFITTERS	26.62	6.54

SHEE0009B 07/01/2002

	Rates	Fringes
SHEET METAL WORKERS	24.94	9.65

SUCO1033A 12/20/2001

	Rates	Fringes
BOILERMAKERS	17.60	
CEMENT MASONS/CONCRETE FINISHERS	17.31	2.85
CARPENTERS:		
Form Building and Setting	16.97	2.74
All Other Work	15.14	3.37
IRONWORKERS, Reinforcing	18.83	3.90
LABORERS:		
Common	11.22	2.92
Landscape	12.56	3.21
Flagger	8.91	3.80
PAINTERS:		
Brush, Roller & Spray	15.81	3.26
POWER EQUIPMENT OPERATORS:		
Backhoe	16.36	2.48
Front End Loader	17.24	3.23
Skid Loader	15.37	4.41

TEAM0435A 05/01/2000

	Rates	Fringes
TRUCK DRIVERS:		
Pickup	14.21	5.27
Tandem/Semi and Water	14.93	5.27

WELDERS - Receive rate prescribed for craft performing operation to which welding is incidental.

Unlisted classifications needed for work not included within the scope of the classifications listed may be added after award only as provided in the labor standards contract clauses (29 CFR 5.5(a)(1)(ii)).

In the listing above, the "SU" designation means that rates listed under that identifier do not reflect collectively bargained wage and fringe benefit rates. Other designations indicate unions whose rates have been determined to be prevailing.

WAGE DETERMINATION APPEALS PROCESS

1.) Has there been an initial decision in the matter? This can be:

* an existing published wage determination
* a survey underlying a wage determination
* a Wage and Hour Division letter setting forth a position on a wage determination matter
* a conformance (additional classification and rate) ruling

On survey related matters, initial contact, including requests for summaries of surveys, should be with the Wage and Hour Regional Office for the area in which the survey was conducted because those Regional Offices have responsibility for the Davis-Bacon survey program. If the response from this initial contact is not satisfactory, then the process described in 2.) and 3.) should be followed.

With regard to any other matter not yet ripe for the formal process described here, initial contact should be with the Branch of Construction Wage Determinations. Write to:

Branch of Construction Wage Determinations
Wage and Hour Division
U. S. Department of Labor
200 Constitution Avenue, N. W.
Washington, D. C. 20210

2.) If the answer to the question in 1.) is yes, then an interested party (those affected by the action) can request review and reconsideration from the Wage and Hour Administrator (See 29 CFR Part 1.8 and 29 CFR Part 7). Write to:

Wage and Hour Administrator
U.S. Department of Labor
200 Constitution Avenue, N. W.
Washington, D. C. 20210

The request should be accompanied by a full statement of the

interested party's position and by any information (wage payment data, project description, area practice material, etc.) that the requestor considers relevant to the issue.

3.) If the decision of the Administrator is not favorable, an

interested party may appeal directly to the Administrative Review Board (formerly the Wage Appeals Board). Write to:

Administrative Review Board
U. S. Department of Labor
200 Constitution Avenue, N. W.
Washington, D. C. 20210

4.) All decisions by the Administrative Review Board are final.

END OF GENERAL DECISION

This page was intentionally left blank for duplex printing.

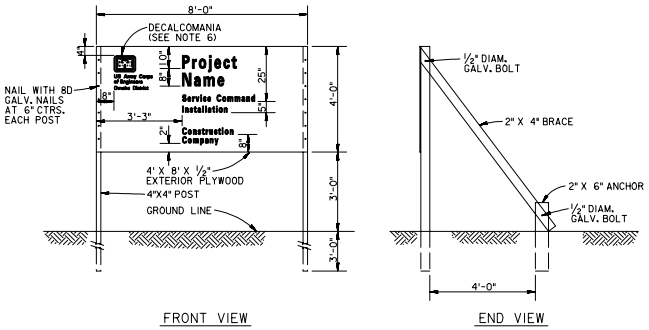

U.S. ARMY INSTALLATION
PROJECT SIGN DETAILS
NO SCALE

NOTES:
1. POSTS SHALL BE S4S.
2. PLYWOOD SHALL BE EXTERIOR TYPE, A-C GRADE.
3. BEFORE PAINTING, SURFACE SHALL BE CLEAN, DRY, FREE OF GREASE AND SANDED.
4. PAINT WITH ONE PRIME COAT ZINC OXIDE AND TWO FINISH COATS SEMI-GLOSS ENAMEL CONFORMING TO FED SPEC TT-P-102. COLOR SHALL MATCH SHERWIN WILLIAMS SW 2093.
5. PROJECT NAME LETTERS SHALL BE 6" HIGH. ALL OTHER LETTERS SHALL BE 3" HIGH. ALL LETTERING SHALL BE WHITE ENAMEL ON GREY BACKGROUND.
6. DECALOMANIA FOR CORPS OF ENGINEERS INSIGNIA WILL BE FURNISHED BY THE CONTRACTING OFFICER FOR INSTALLATION BY THE CONTRACTOR.
7. LETTERING STYLE SHALL BE EITHER HELIOS EXTRA BOLD CONDENSED, HELIOS BOLD II, HELVETICA BLACK ROMAN, OR HELVETICA BOLD ROMAN.

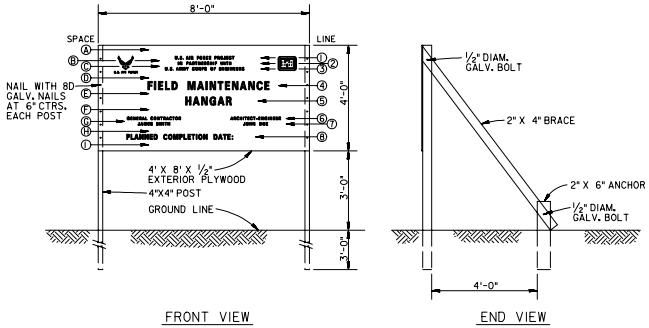

U.S. AIR FORCE MCP PROJECTS
PROJECT SIGN DETAILS
NO SCALE

SCHEDULE

SPACE	HEIGHT	LINE	DESCRIPTION	LETTER HEIGHT	STROKE
A	5"	1	U.S. AIR FORCE PROJECT	1.5"	3/16"
B	1"	2	IN PARTNERSHIP WITH	1.5"	3/16"
C	1"	3	U.S. ARMY CORPS OF ENGINEERS	1.5"	3/16"
D	5"	4	PROJECT NAME	4"	1/2"
E	3"	5	PROJECT NAME CONT'D (IF REQ'D)	4"	1/2"
F	5"	6	GENERAL CONTRACTOR/A-E	1.5"	3/16"
G	1"	7	GENERAL CONTRACTOR/A-E	1.5"	3/16"
H	4"	8	PLANNED COMPLETION DATE	2.5"	1/4"
I	5"				

NOTES:
1. POSTS SHALL BE S4S.
2. PLYWOOD SHALL BE EXTERIOR TYPE, A-C GRADE.
3. BEFORE PAINTING, SURFACE SHALL BE CLEAN, DRY, FREE OF GREASE AND SANDED.
4. PAINT WITH ONE EXTERIOR OIL PRIME COAT AND EXTERIOR TYPE ALKYD, CONFORMING TO MASTER PAINTERS INSTITUTE MPI-9. MPI GLOSS LEVEL 6. COLOR SHALL MATCH SHERWIN WILLIAMS SW 2175.
5. ALL LETTERING SHALL BE EXTERIOR TYPE ALKYD. COLOR SHALL MATCH SHERWIN WILLIAMS SW 1900.
6. DECALOMANIA FOR CORPS OF ENGINEERS INSIGNIA AND U.S. AIR FORCE EMBLEM WILL BE FURNISHED BY THE CONTRACTING OFFICER FOR INSTALLATION BY THE CONTRACTOR.
7. ALL EXPOSED WOOD (POSTS, SUPPORTS, BACK, ETC.) SHALL BE PAINTED THE SAME BACKGROUND COLOR AS THE SIGN.
8. LETTERING STYLE SHALL BE EITHER HELIOS EXTRA BOLD CONDENSED, HELIOS BOLD II, HELVETICA BLACK ROMAN, OR HELVETICA BOLD ROMAN.

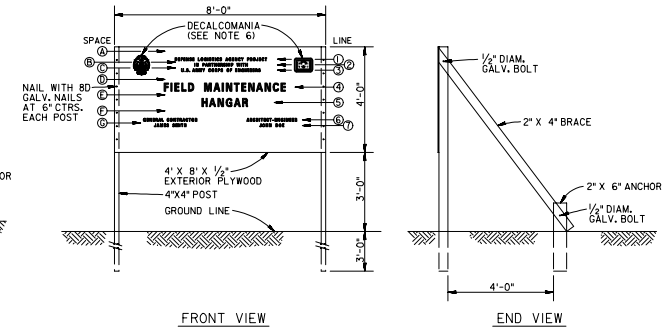

DEFENSE LOGISTICS AGENCY PROJECTS
PROJECT SIGN DETAILS
NO SCALE

SCHEDULE

SPACE	HEIGHT	LINE	DESCRIPTION	LETTER HEIGHT	STROKE
A	5"	1	DEFENSE LOGISTICS AGENCY PROJECT	1.5"	3/16"
B	1"	2	IN PARTNERSHIP WITH	1.5"	3/16"
C	1"	3	U.S. ARMY CORPS OF ENGINEERS	1.5"	3/16"
D	5"	4	PROJECT NAME	4"	1/2"
E	3"	5	PROJECT NAME CONT'D (IF REQ'D)	4"	1/2"
F	5"	6	GENERAL CONTRACTOR/A-E	1.5"	3/16"
G	1"	7	GENERAL CONTRACTOR/A-E	1.5"	3/16"

NOTES:
1. POSTS SHALL BE S4S.
2. PLYWOOD SHALL BE EXTERIOR TYPE, A-C GRADE.
3. BEFORE PAINTING, SURFACE SHALL BE CLEAN, DRY, FREE OF GREASE AND SANDED.
4. PAINT WITH ONE EXTERIOR OIL PRIME COAT AND EXTERIOR TYPE ALKYD, CONFORMING TO MASTER PAINTERS INSTITUTE MPI-9. MPI GLOSS LEVEL 6. COLOR SHALL MATCH SHERWIN WILLIAMS SW 2175.
5. ALL LETTERING SHALL BE EXTERIOR TYPE ALKYD. COLOR SHALL MATCH SHERWIN WILLIAMS SW 1900.
6. DECALOMANIA FOR CORPS OF ENGINEERS INSIGNIA AND DEFENSE LOGISTICS AGENCY EMBLEM WILL BE FURNISHED BY THE CONTRACTING OFFICER FOR INSTALLATION BY THE CONTRACTOR.
7. ALL EXPOSED WOOD (POSTS, SUPPORTS, BACK, ETC.) SHALL BE PAINTED THE SAME BACKGROUND COLOR AS THE SIGN.
8. LETTERING STYLE SHALL BE EITHER HELIOS EXTRA BOLD CONDENSED, HELIOS BOLD II, HELVETICA BLACK ROMAN, OR HELVETICA BOLD ROMAN.

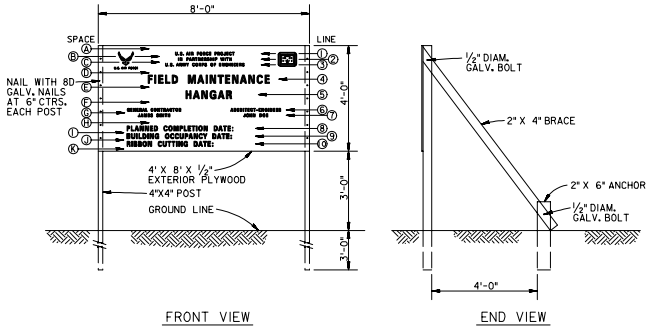

U.S. AIR FORCE ACC MCP PROJECTS
PROJECT SIGN DETAILS
NO SCALE

SCHEDULE

SPACE	HEIGHT	LINE	DESCRIPTION	LETTER HEIGHT	STROKE
A	3"	1	U.S. AIR FORCE PROJECT	1.5"	3/16"
B	1"	2	IN PARTNERSHIP WITH	1.5"	3/16"
C	1"	3	U.S. ARMY CORPS OF ENGINEERS	1.5"	3/16"
D	4"	4	PROJECT NAME	4"	1/2"
E	3"	5	PROJECT NAME CONT'D (IF REQ'D)	4"	1/2"
F	4"	6	GENERAL CONTRACTOR/A-E	1.5"	3/16"
G	1"	7	GENERAL CONTRACTOR/A-E	1.5"	3/16"
H	4"	8	PLANNED COMPLETION DATE	2.5"	1/4"
I	1"	9	BUILDING OCCUPANCY DATE	2.5"	1/4"
J	1"	10	RIBBON CUTTING DATE	2.5"	1/4"
K	2"				

NOTES:
1. POSTS SHALL BE S4S.
2. PLYWOOD SHALL BE EXTERIOR TYPE, A-C GRADE.
3. BEFORE PAINTING, SURFACE SHALL BE CLEAN, DRY, FREE OF GREASE AND SANDED.
4. PAINT WITH ONE EXTERIOR OIL PRIME COAT AND EXTERIOR TYPE ALKYD, CONFORMING TO MASTER PAINTERS INSTITUTE MPI-9. MPI GLOSS LEVEL 6. COLOR SHALL MATCH SHERWIN WILLIAMS SW 2175.
5. ALL LETTERING SHALL BE EXTERIOR TYPE ALKYD. COLOR SHALL MATCH SHERWIN WILLIAMS SW 1900.
6. DECALOMANIA FOR CORPS OF ENGINEERS INSIGNIA AND U.S. AIR FORCE EMBLEM WILL BE FURNISHED BY THE CONTRACTING OFFICER FOR INSTALLATION BY THE CONTRACTOR.
7. ALL EXPOSED WOOD (POSTS, SUPPORTS, BACK, ETC.) SHALL BE PAINTED THE SAME BACKGROUND COLOR AS THE SIGN.
8. LETTERING STYLE SHALL BE EITHER HELIOS EXTRA BOLD CONDENSED, HELIOS BOLD II, HELVETICA BLACK ROMAN, OR HELVETICA BOLD ROMAN.

$$ – THINK VALUE ENGINEERING – $$

Revisions

Symbol	Descriptions	Date	Approved

U.S. ARMY ENGINEER DISTRICT
CORPS OF ENGINEERS
OMAHA, NEBRASKA

Designed by: X
Drawn by: D.J.K.
Checked by: X
Reviewed by: X
Submitted by:
Chief: Civil Engr. Section

X
X
X
X

PROJECT SIGN DETAILS

COMPUTER AIDED DESIGN & DRAFTING

Plot Scale Ratio: 1:2
Design File: PROJSIGN.DGN
Date: FEBRUARY 2002
Spec. No.: DACA 45
Drawing Code: X
Contract No.: DACA 45
Sheet reference number: C-8.10

This page was intentionally left blank for duplex printing.

SECTION TABLE OF CONTENTS

DIVISION 01 - GENERAL REQUIREMENTS

SECTION 01001

SUMMARY OF WORK

PART 1 SUMMARY OF WORK

1.1 FUNCTION
1.1.1 Consolidated Space Group Operations Facility
1.1.2 Building Arrangement
1.2 GOALS AND OBJECTIVES
1.2.1 Codes
1.2.2 Building Durability
1.2.3 Changes to RFP Criteria Requirements
1.2.4 Sustainable Design and Development Technology
1.3 FACILITY TYPE, AND SIZE
1.3.1 Facility Type - Permanent Construction
1.3.2 Facility Size
1.4 PERSONNEL AND EQUIPMENT
1.5 DRAWINGS
1.6 OPERATION AND MAINTENANCE REQUIREMENTS
1.6.1 Operation and Maintenance Manuals
1.6.2 Training
1.7 OVERVIEW OF DESIGN-BUILD PROCESS
1.7.1 Overview
1.7.2 Process
1.8 DESIGN-BUILD CONTRACTOR REQUIRED A/E SERVICES
1.8.1 Dimensions
1.8.2 Professional Licenses
1.8.3 Request For Proposal - Binding Information
1.8.4 Evaluation of Systems
1.8.5 Document Requirements
1.8.5.1 Design documents at all stages of design include:
1.8.5.2 Drawing Requirements
1.8.5.3 60 Percent Design Requirements
1.8.5.4 100 Percent Design Requirements
1.8.5.5 100 Percent Corrected Final Design
1.9 COMMON DEFICIENCIES

PART 2 NOT USED

PART 3 NOT USED

-- End of Section Table of Contents --

SECTION 01001

SUMMARY OF WORK

PART 1 SUMMARY OF WORK

1.1 FUNCTION

1.1.1 Consolidated Space Group Operations Facility

The Consolidated Space Group Operations Facility will be located at Schriever AFB, Colorado, and will provide a quality facility for the 319th Reserve Space Group and 4 newly activated operational squadrons. The facility will enhance the ability of Reserves and combined operational squadrons to perform operation management, briefings/debriefings, planning, training, testing, safety, mobility functions, evaluations and scheduling within the Consolidated Space Group Operations Facility.

The facility will be sited at the intersection of Irwin Avenues and _ Discoverer Street. The project will consist of the construction of the Consolidated Space Group Operations Facility, which requires a 2-story facility that will be compatible with Schriever AFB architectural standards and includes optional crawl space, parking, exterior lighting, sidewalks and landscaping. The project will be constructed in the Secure Area within the double fenced boundary of Schriever AFB.

The anticipated staffing for this facility is approximately 200 people.

There will be new landscaping, sodding and irrigation, and seeding. All areas disturbed by construction activities not being otherwise surfaced will be zeroscaping.

An area of the facility, as indicated on the drawings, is being designed to allow for a future Sensitive Compartmented Information Facilities (SCIF). The anticipated staff for this area is 12 people.

1.1.2 Building Arrangement

Overall configuration of the facility is "L" shaped, and is compatible with the surrounding buildings in the area. This facility consists mainly of general office space and it's related support areas. Which consist of conference rooms, break rooms, restrooms, storage, mechanical, electrical and communications areas.

1.2 GOALS AND OBJECTIVES

Based on user interviews, a pre design conference and a design charrette the following goals were defined:

1.2.1 Codes

Building codes and life safety codes shall be met or exceeded. Applicable codes are listed in each section.

1.2.2 Building Durability

Materials and equipment will be chosen for their durability and minimum or nonexistent maintenance. The building design will conserve man made resources and energy usage.

1.2.3 Changes to RFP Criteria Requirements

This Request for Proposal provides requirements expected of the design-build Contractor during the design and construction of this project.

The RFP drawings presents an overall design concept of the project, provides useful project information, establishes some definition of the systems to be used and incorporates requirements expected by the Using Service.

It shall be the responsibility of the design-build Contractor to assemble the best value-priced construction systems for this project that meet or exceed the design criteria set forth herein.

Offerors should not consider changes to RFP criteria requirements during proposal preparation . After contract award, any changes to the RFP criteria requirements require approval by the Contracting Officer.

See Section 01332 DESIGN AND CONSTRUCTION DELIVERABLES/PROCEDURES for additional requirements, paragraph 3.2 SPECIFICATIONS.

1.2.4 Sustainable Design and Development Technology

To the extent referenced in the solicitation, the Contractor shall provide a facility which utilizes sustainable design and development principles. Green building technology shall be incorporated into the design of this facility that will consider the use of skylights, passive solar, and solar hot water heating. The basic objectives are to:

1) Reduce consumption of energy, land and other non-renewable resources.

2) Minimize waste of materials, water, and other limited resources.

3) Consider the cost of energy dollars while creating livable, healthy and productive environments that maintain comfort, health, and safety for the people using the facility.

4) This facility shall meet the requirements of achieving at least a "Bronze" rating (although no certification is required)in accordance with the Sustainable Project Rating Tool (SPiRiT), Version 1.4.1 and incorporate as a minimum the features indicated as required. The contractor shall provide throughout the course of the design, a summary documentation of all items and categories in SPIiRiT whether incorporated or not. This documentation will serve as a self-assessment and record for Schriever AFB.

5) Green Building Technology and Whole Building Design are referenced names involving sustainable design and development principles.

Related References:

ETL 1110-3-491 (31 January 2000) Sustainable Design for Military

Facilities

SPiRiT, Version 1.4 Sustainable Project Rating Tool, April 2001

Web Sites to Consider for Sustainable Design and Development:

EPA Designated product (available at http://www.epa.gov/cpg)

Green Building Council: http://www.usgbc.org

Whole Building Design Guide: http://www.wbdg.org/

Energy Star Building Program - Eviromental Protection Agency: http:www.epa.gov/energystar/

Leadership in Energy and Environmental Design Green Building Rating System Criteria (LEED) U.S. Green Building Council: http://www.usgbc.org/programs.leed.htm

U. S. Department of Energy:

www.eren.doe.gov/buildings/build_design.html

1.3 FACILITY TYPE, AND SIZE

1.3.1 Facility Type - Permanent Construction

The Consolidated Space Group Operations Facility is adequately sized, configured, and will be located at Schriever, Colorado.

1.3.2 Facility Size

The Consolidated Space Group Operations Facility project is programmed at 28,567 gross square feet.

1.4 PERSONNEL AND EQUIPMENT

The complete facility design shall provide facilities for a maximum of 70 full time employees and will be operational up to 14 hours per day, 7 days per week.

1.5 DRAWINGS

Functional concept drawings of the site area and floor plans, and elevations are included for use in developing this design.

1.6 OPERATION AND MAINTENANCE REQUIREMENTS

1.6.1 Operation and Maintenance Manuals

The intent of the O&M Manuals are to promote and maximize the efficiency, economy, safety, and effectiveness of the life cycle operation, maintenance, and repair of the facility. Operation and maintenance manuals as required by the UFGS Technical Specifications (Divisions 1 thru 16) to be edited by the contractor shall be provided.

1.6.2 Training

The Contractor shall provide operational and maintenance training for all

systems furnished under this contract. The training will be for the operating and maintenance personnel. The training shall be put on by the system manufacturer. The training shall not take place until the operation and maintenance manuals are submitted and approved. The Contractor shall video tape the training session on VHS tapes and provide tapes to the Government.

1.7 OVERVIEW OF DESIGN-BUILD PROCESS

1.7.1 Overview

Since the early 1980s Congress has urged the military services to explore alternative construction methods, such as "Design-Build," which includes both design and construction under a single contract. This process is similar to "one-step turnkey selection procedures" and is defined in Title 10 of the United States Codes, Section 2862.

1.7.2 Process

The design-build process uses a Request for Proposal (RFP) to solicit for design and construction of a facility by a single contractual entity, such as a design-build firm, or joint venture between architect-engineer (A-E) and construction firm, or a construction management (CM) firm joint venture with an A-E and a construction firm. A design-build RFP states the project functional requirements, design and engineering criteria, technical performance specifications, and proposal evaluation factors. Potential contractors develop their proposals for the government to evaluate competitively, with the contract award based on a combination of technical merit and price.

In general, the RFP is a conceptual design document and the design-build contractor is responsible for completing the design and constructing the project. The RFP has developed the site plan and building design and given the facility an architectural character. These designs, with minor deviations allowed for detailing and constructibility, must be carried through to construction. The design-build contractor is responsible for all other designs on the project, such as the HVAC system, as long as they fit within the established criteria, and can be built on time and within budget.

After award of the contract, the design-build contractor will prepare a series of design submittals for review by the Government, so that design and criteria compliance can be effectively monitored for compliance. After approval of the final design, construction can begin. On-site construction activities shall not begin until all final corrected plans, specifications and design analysis for the entire project have been approved by the Government.

1.8 DESIGN-BUILD CONTRACTOR REQUIRED A/E SERVICES

The following is a condensed summary of Section 01332, "DESIGN AND CONSTRUCTION DELIVERABLES/PROCEDURES" contained elsewhere in this document. Refer to this Section for the full requirements.

1.8.1 Dimensions

Design, products and construction for the Consolidated Space Group Operations Facility project shall be accomplished using English expressions of measurement. All measurements in the technical performance specifications sections are shown in English.

1.8.2 Professional Licenses

The award of contract will be made to one qualified contractual entity who will be responsible for design completion and the entire construction process for the facility. This contractual entity shall employ qualified building design professionals with appropriate state licenses.

1.8.3 Request For Proposal - Binding Information

The information contained in this Request for Proposal (RFP) shall be considered binding unless specifically waived by the Contracting Officer. The successful offeror's proposal, along with any clarifications and/or best and final offers are a binding part of this contract. Site design, building design, architectural character and engineering/performance criteria shall be implemented through construction by the design-build contractor.

1.8.4 Evaluation of Systems

As part of the basic services, the design-build contractor shall evaluate building systems and components for their possible inclusion into the design. If these systems and components meet the specified design and performance criteria in the RFP, they may then be incorporated into the work.

1.8.5 Document Requirements

For a more detailed list of design and construction submittals, see Section 01332,
DESIGN AND CONSTRUCTION DELIVERABLES/PROCEDURES.

1.8.5.1 Design documents at all stages of design include:

Construction drawings.

Specifications.

Design analysis narrative with calculations for all disciplines.

Magnetic media on CD-ROM at the 100 percent corrected final design only.

Summary analysis of Sustainable Design and Development features and principles based on the SPiRiT rating system to achieve the rating category as previously defined. Explanation and costs of all categories and features included in this design will be documented. This will be an integral part of the Design Analysis.

1.8.5.2 Drawing Requirements

All design drawings shall be accomplished using English unit measurement. Prepare 28-inch x 40-inch full-size drawings and half-size drawings in accordance with the Omaha District CADD Standards Manual.

The design-build contractor shall submit the design at various stages of completion, plus the final documents, for review and comment. These stages are:

60 percent design submittal.

100 percent design submittal.

100 percent corrected final design.

1.8.5.3 60 Percent Design Requirements

Drawings, including electrical panel schedules and mechanical equipment schedules, draft specifications, design analysis and calculations for all disciplines at an approximate 60 percent level of completion.

Color boards for SID. NOTE: SID package shall be final at the 60% submittal. The 100% submittal shall be updated as required.

1.8.5.4 100 Percent Design Requirements

Incorporate all comments from the 60 percent review.

Drawings, specifications, design analysis and calculations for all disciplines at 100 percent level of completion. All aspects of the project are complete.

Updated Color boards; SID.

1.8.5.5 100 Percent Corrected Final Design

Incorporate comments from the 100 percent design submittal.

Magnetic media.

1.9 COMMON DEFICIENCIES

Following are some common costly deficiencies to be avoided in the preparation of contract documents. Carefully compare the architectural design and contract documents with these requirements at several points in the design process to avoid unnecessary changes later.

Not using correct abbreviations or terminology on the drawings. Abbreviations must match what is used on the standard abbreviation sheet and terminology must match what is used in the standard guide specifications.

Not using the correct scales, north arrow designation, section cut system, or incomplete dimensioning on the drawings.

Not providing sufficient space for door operation hardware at doors which swing into a wall running perpendicular to the opening.

Not providing correct and complete Design Analysis information written in the present tense. The Design Analysis will be written following the format indicated in Section 01332 of the Request For Proposal. A separate Fire Protection section in the Design Analysis with input from all disciplines is one area which is often overlooked and shall be included.

Not providing a structural stoop at exterior doors where the slab is at the same approximate elevation as the interior floor. The use of simple slabs on exterior grade leads to lifting of the slab in below-freezing temperatures which interferes with the safe operation of the door.

Not correctly presenting or coordinating (to avoid interference) features of Fire Protection, Noise Control, and Physical Security.

Not correctly referencing and cross referencing building sections, wall sections, details, etc.

Failure to read/use Technical Notes in Guide Specifications.

Failure to coordinate all disciplines prior to submittal of projects for review.

Sealant details not identified by appropriate sealant type that relates to the specifications.

Improper use of fire-retardant wood. Fire-retardant wood is combustible; its use in buildings that are of noncombustible construction is extremely limited (see UBC for the minor allowable uses). Because of the potential for severe degradation, fire retardant plywood shall not be used in a roof or roofing system, or in structural applications.

Incorrectly listing trade names in door hardware specifications in lieu of ANSI numbers and failure to correctly specify hardware finishes.

Control joint in CMU walls are not shown on both architectural and structural plans, or are inconsistent and not coordinated. Brick expansion joints not being properly shown on the floor plans and/or coordinated with the elevations.

Gutters and downspouts not being sized and indicated on the drawings. Snow guard protection not being shown, properly located, or detailed.

Failure to delete all publications from Guide Specifications which do not apply to the particular project.

North is not oriented the same direction on all sheets (civil, site, architectural).

Failure to properly edit and tailor Guide Specifications.

PART 2 NOT USED

PART 3 NOT USED

-- End of Section --

SECTION TABLE OF CONTENTS

DIVISION 01 - GENERAL REQUIREMENTS

SECTION 01002

SITE WORK

02/03

PART 1 SITE WORK

1.1 REFERENCES
1.2 OMAHA DISTRICT CORPS OF ENGINEERS STANDARD DETAILS AND CADD CELLS.
1.3 SURVEY
1.3.1 Field Survey
1.3.2 Setting of Surveying Monuments
1.3.3 As-Built Conditions
1.4 STAGING AND CONTRACTORS ACCESS
1.4.1 Staging Area
1.4.2 Contractors Access Route
1.4.3 Project Sign
1.5 FENCING AND FREE ZONE AREA
1.5.1 Free Zone Fence and Gates
1.5.2 Restricted Area Signs
1.6 DEMOLITION AND REMOVAL
1.7 NEW CONSTRUCTION
1.7.1 Building
1.7.2 Main Entrance Walk
1.7.3 Walks
1.7.4 Grass Paver Service Drive
1.7.5 Dumpster Screenwall Enclosure
1.7.6 Landscaping
1.7.7 Turf
1.7.7.1 Soil Preparation
1.7.7.2 Seeding and Sodding
1.7.7.3 Sod
1.7.7.4 Seeding
1.7.8 Irrigation Sprinkler System
1.8 PAVEMENT AND SIDEWALK
1.8.1 Pavement Section
1.8.2 Rigid Pavement Joint Layout
1.8.3 Sidewalks
1.8.4 Utility Crossings
1.8.5 Pavement Specifications
1.8.5.1 Rigid Base Course
1.8.5.2 P.C. Concrete Pavement
1.8.5.3 Joint Sealing
1.8.5.4 Concrete Sidewalks and Curbs and Gutters
1.9 GRADING
1.9.1 General
1.9.2 Adjustment of Existing Structures
1.9.3 Borrow and Waste
1.9.4 Sidewalks and Curb and Gutter
1.9.5 Transverse Parking Area Grades
1.9.6 Longitudinal Parking Area Grades

1.9.7 Ramp Grades
1.9.8 Gutter Grades
1.9.9 Grades Away From Building
1.9.10 Overlot Grades
1.9.11 Ditch Slopes
1.9.12 Ditches
1.10 STORM DRAINAGE
1.10.1 Determination of Storm Runoff
1.10.1.1 Design Storm Return Period
1.10.1.2 Rainfall Depth-Duration-Frequency Data
1.10.2 Storm Drainage System Design
1.10.2.1 Hydraulic Design
1.10.2.2 Manholes
1.10.2.3 Area Inlets
1.10.2.4 Curb Inlets
1.10.2.5 Head walls and Flared End Sections
1.10.3 Downspouts and Roof Drains
1.10.4 Storm Drain and Culvert Pipe
1.10.4.1 Concrete Pipe
1.10.4.2 Corrugated Metal Pipe
1.10.4.3 Plastic Pipe
1.11 FOUNDATION DRAINAGE SYSTEM
1.11.1 General
1.11.2 Foundation Drainage Design
1.11.3 Foundation Drain Pipe
1.11.4 Foundation Drain Force Main Pipe
1.11.5 Lift Station
1.11.6 Sump Pump
1.12 EROSION AND SEDIMENT CONTROL
1.12.1 Temporary Construction Entrance
1.12.2 Surface Preparation
1.12.3 Erosion Control Blanket
1.12.4 Silt Fence
1.12.5 Straw Bale Barrier
1.12.6 Outlet Protection
1.12.7 Storm Drain Inlet Protection
1.12.8 Rock Check Dam
1.12.9 Temporary Sediment Trap
1.12.10 Temporary Sediment Basin
1.12.11 Other Controls
1.13 UTILITIES
1.13.1 CATHODIC PROTECTION
1.13.2 WATERLINES
1.13.2.1 Water Distribution and Service Lines
1.13.2.2 Dedicated Fire Water Service Lines
1.13.3 WASTEWATER
1.13.3.1 Design Criteria
1.13.3.2 Manholes
1.13.4 Gas Distribution System
1.14 EXCAVATION, TRENCHING, AND BACKFILLING FOR UTILITIES SYSTEMS.
1.14.1 Trenches

PART 2 NOT USED

PART 3 NOT USED

-- End of Section Table of Contents --

SECTION 01002

SITE WORK
02/03

PART 1 SITE WORK

1.1 REFERENCES

AMERICAN WATER WORKS ASSOCIATION(AWWA)

AWWA M17	(1989)Installation, Field Testing, and Maintenance of Fire Hydrants
AWWA C651	(1999) Disinfecting Water Mains

DEPARTMENT OF THE ARMY TECHNICAL MANUALS (TM)

TM 5-820-1	(20 Aug 87) Surface Drainage Facilities for Airfields and Heliports
TM 5-820-4	(Oct 83) Drainage for Areas Other Than Airfields
TM 5-822-5	(June 92) Pavement Design for Roads, Streets Walks, and Open Storage Areas

http://www.usace.army.mil/inet/usace-docs/armytm/

TECHNICAL INSTRUCTION (TI)

TI 814-1	(1998) Water Supply
TI 814-3	(1998) Water Distribution
TI 814-10	(1998) Sanitary and Industrial Wastewater Collection - Pumping Stations and Force Mains.

ENGINEERING MANUALS (EM)

EM 385-1-1	(1996 and Changes) Safety and Health Requirements Manual
EM 1110-1-1002	(1990) Survey Markers and Documentation

ASTM INTERNATIONAL (ASTM)

ASTM D 977	(1998) Emulsified Asphalt
ASTM D 2027	(1997) Cutback Asphalt (Medium-Curing Type)
ASTM D 2028	(1997) Cutback Asphalt (Rapid-Curing Type)
ASTM D 2397	(1998) Cationic Emulsified Asphalt

HANDICAPPED STANDARDS (HS)

ADAAG	(January 1998) Accessibility Guidelines for Buildings and Facilities

NATIONAL OCEANIC AND ATMOSPHERIC ADMINISTRATION (NOAA)

NOAA ATLAS 2	(1973) Precipitation-Frequency Atlas of the Western United States

AMERICAN ASSOCIATION OF STATE HIGHWAY & TRANSPORTATION OFFICIALS (AASHTO)

AASHTO	A Policy on Geometric Design of Highways and Streets

AMERICAN NATIONAL STANDARDS INSTITUTE (ANSI)

ANSI D6.1	(1988) Manual on Uniform Traffic Control Devices for Streets & Highways

MILITARY HANDBOOKS (MH)

MIL-HDBK-1008C	(10 Jun 1997) Fire Protection for Facilities Engineering, Design, and Construction

NATIONAL FIRE PROTECTION ASSOCIATION (NFPA)

NFPA 24	(1995) Installation of Private Fire Service Mains and Their Appurtenances

STATE OF COLORADO SPECIFICATIONS

CDOT	Colorado Highway Specifications

AIR FORCE PAMPHLET (AFP)

AFP 32-1097	(1 Nov 1997) Sign Standards Pamphlet

DEPARTMENT OF DEFENSE (UFC)

UFC 4-010-01	DOD MINIMUM ANTITERRORISM STANDARDS FOR BUILDINGS Dated 31 July 2002

1.2 OMAHA DISTRICT CORPS OF ENGINEERS STANDARD DETAILS AND CADD CELLS.

The Omaha Districts Civil and Environmental standard details and CADD cells are available on the Omaha District FTP site. See web site identified in Section 01332 DESIGN AND CONSTRUCTION DELIVERABLES/PROCEDURES. These standards and cells are available for the Contractor's use. References to using exact details and drawings are found in this section. In those cases, the Contractor shall use the referenced standard drawings and/or details.

1.3 SURVEY

1.3.1 Field Survey

The engineering survey to be used in the development of the design submittal is available to the Contractor on CD-ROM furnished with this solicitation. The information is in English units. The Autocad drawing file is SH14C1.01.dwg. The survey data information was gathered by a topographical survey performed in February of 2003. Contours were gathered at 1-foot intervals. The survey was developed using Colorado State Plane Coordinate System North Zone, English units in U.S. Survey Feet. The horizontal and vertical control reference datums are NAD 83 and NGVD 29 respectively. All final supplied data is True State Plane at zero elevation. **Government provided survey drawings are provided to assist the Contractor in preparing his proposal. Any errors identified shall be brought to the attention of the Contracting Officer immediately for resolution and direction. The Contractor shall take all professionally prudent and reasonable actions to verify the accuracy of the data provided. During design and construction, the Contractor shall be responsible for obtaining any additional data necessary for the execution of this project.**

1.3.2 Setting of Surveying Monuments

The Contractor shall set two permanent surveying monuments on the Consolidated Space Group Operations site in accordance with this paragraph. The monuments will be established to second order horizontal and vertical control. The Contracting Officer's Representative (COR) shall approve the actual monument locations prior to establishment. Monuments will be Type G monument per EM 1110-1-1002. Field notes, as well as final monument horizontal and vertical coordinates shall be provided to the COR.

1.3.3 As-Built Conditions

The Contractor shall be responsible for surveying all new and relocated utilities for location and elevation prior to backfilling. Coordinates and elevations of all branch lines, changes in direction, valves, curb stops, fire hydrants, storm drainage and sanitary sewer structures, and any other utility structures shall be documented and provided to the Contracting Officer.

1.4 STAGING AND CONTRACTORS ACCESS

1.4.1 Staging Area

The location of the Contractor staging area is shown on the Location Plan. Staging area shall be returned to its original condition upon completion of construction.

1.4.2 Contractors Access Route

The Contractor's access route to the project location shall be approximately as shown on the Location Plan. The Contractor is to coordinate with Base Security if access to the site is modified based on FPCON level at the base.

1.4.3 Project Sign

Contractor shall provide project sign in accordance to Omaha District Standard Drawing C-8.10, PROJECT SIGN DETAILS.

1.5 FENCING AND FREE ZONE AREA

1.5.1 Free Zone Fence and Gates

Free zone fencing is temporary fencing that will be installed within the secure area. The free zone fence will enclose the entire construction site including the staging area. See RFP drawings for preliminary alignment of the free zone fence. The final location of the fence and gates will need to be coordinated with Schriever AFB (50 SFS) during the preparation of the design documents. In addition to the Contractor's entrance, a second entrance will be required in the event of an emergency (i.e. Fire Dept. or Medical/Ambulance) that would be chained and locked. The fire dept. will require a copy (or the original and only) key to the lock and gate. Free zone fencing will consists of eight-foot high chain-link fence, double swing gates, and pedestrian gate with single outrigger and three strands of barbed wire. The posts will be no more than 10 feet apart and will be driven into the ground at least 24 inches but need not be encased with concrete. The fence fabric will be extend to within two inches of hard-packed earth or fill where the terrain requires. The fence fabric shall be 8 feet high with top rail and bottom wire. Chainlink fabric shall be either zinc or aluminum coated 9-gage wire woven in a 2 inch mesh. Tie wires shall be 9-gage galvanized steel wire. Chainlink fencing and gate(s) shall be specified in UFGS specification SECTION 02821A FENCING. The Contractor will need to coordinate the schedule of activities for installing and removing the free zone fence with the Contracting Officer prior to any work inside the secure area. The Contractor will be required to have a security escort the entire time when installing and removing the free zone fence.

1.5.2 Restricted Area Signs

The boundary of all free zones will be posted with approved restricted area signs. The signs will face inward toward the contract/free zone area. Under some circumstances, it may be necessary to mark the entry control point (ECP).

1.6 DEMOLITION AND REMOVAL

The Contractor shall remove all pavement, utilities, site features, trees, and structures as required to design and construct the new Consolidated Space Group Operations Facility. Existing trees and shrubs to be removed shall be saved and relocated on site as directed by the Contracting Officer.

All materials shall be disposed of outside the limits of Government controlled lands. Disposals shall be in accordance with federal, state, and local regulations. The Contractor shall notify the Contracting Officer if any material to be disposed of is found to contain hazardous, toxic, biological or radiological substances. Rubbish and debris shall be removed from Government property daily to avoid accumulation at the project site.

1.7 NEW CONSTRUCTION

The location and construction of the Consolidated Space Group Operations Facility, service drives, walks, utilities, landscaping and related systems shall be as indicated on the RFP drawings and in these specifications. **The Site Plan provided in the RFP is to be considered as preliminary and is provided as information to assist the Contractor in preparing their proposal. Any errors identified shall be brought to the attention of the Contracting Officer immediately for resolution and direction. The Design Build Contractor shall provide the final Site Plan as part of the design package.**

1.7.1 Building

The general location of the Consolidated Space Group Operations Facility shall be as shown on the RFP drawings. However, the exact location may be revised slightly by the Contractor as needed to accommodate the final project layout. All site layout shall be subject to approval by the Government. The building is required to be handicapped accessible.

1.7.2 Main Entrance Walk

Construct a 16 foot wide main entrance walk that connects to an entry plaza on the Southwest side of the building as shown on the RFP drawings. The entrance walks and entry plaza shall be light-broom-finished concrete and have a pattern formed by expansion and contraction joints. Minor alterations may be made to the design of the entrance walks and entry plaza as the site design is further developed.

1.7.3 Walks

Concrete walks shall be constructed as indicated on the RFP drawings. Walks shall be medium broom finished and have a square and rectangular pattern formed by expansion and contraction joints. Curb cuts shall be provided for handicapped accessibility at intersections of drives and walks.

1.7.4 Grass Paver Service Drive

The Contractor shall provide a 12 foot wide service drive to the back of the building as shown on the RFP drawings. The drive shall be made with grass pavers. Grass paver system shall be made from 100% post-consumer plastic, be ring shaped, black in color, provide compressive strength of over 5720 psi when installed and provide 92% area for root growth. A concrete apron shall be provided where the service drive ties into Discoverer Street. The concrete apron shall extend past the sidewalk as a minimum.

1.7.5 Dumpster Screenwall Enclosure

A concrete pad and dumpster screenwall enclosure shall be provided at the location shown on the RFP drawings. A minimum distance of 82 feet between the building and dumpster location is required. The screenwall enclosure shall be a minimum of 12 feet long x 12 feet wide x 8 feet high and constructed of materials to match the Consolidated Space Group Operations Facility exterior walls. The vehicle-access side of the enclosure shall have a 9 foot wide opening with a double-swing gate constructed of 2 inches x 1/2 inch bars and 3/4 inch square steel tubes. The color shall be coordinated with the Schriever AFB FEP. A gate keeper, capable of holding the gates in an open position, and a locking mechanism shall be integrated into the gate design. Metal flashing shall be provided on top of the block walls.

1.7.6 Landscaping

The Landscape Plan provided in the RFP is to be considered as preliminary and is provided as information to assist the Contractor in preparing their proposal. Any errors identified shall be brought to the attention of the Contracting Officer immediately for resolution and direction. The Design Build Contractor shall provide the final Landscape Plan as part of the design package. Landscape plan shall be designed in accordance with

Landscape & Water Conservation Design Guidelines for SAFB. See Attachment No. 2. The proposed landscape shall visually-enhance the new facility with color, form and screening, while providing shade and windbreak. Landscape improvements closer than 33 feet to the building shall conform to UFC 4-010-01.

All trees will be located in shrub beds. No trees will be planted in turf areas. The existing plantings on the east side of Discoverer Street by the project site shall be used as a design guide. The landscaping requirements are defined on sheet C3.02includes the basic landscaping and one option.

Landscaping shall consist of low maintenance balled and burlapped trees and container-grown shrubs. Plant materials shall be climatized to the local area for a period of one growing season prior to planting and consist of the following. Plants shall be chosen from Appendix E of Schriever AFB General Plan, "Plant Species Palette for SAFB,". See Attachment No. 2. All shrub planting beds shall be surfaced with a commercial weed-barrier fabric and a 3 inch thick surface of 1/2 inch to 1 inch size of decorative rock and wood mulch. The Contractor shall coordinate with the base on the type of rock and wood mulch desired. All plant beds not edged by walks and drives shall be edged with a integral-colored concrete edging, 12 inch wide and 3 inch deep. The edging shall protrude 2 inches above finished grade. The edging shall have a chamfer on the outside edge, and have contraction joints at 8 feet on center. Mulch trees to a minimum diameter of 60 inches or 24 inches beyond the tips of tree branches and shrub planting beds with a 3 inch thick surface of shredded cedar mulch. Landscape plantings shall be specified in UFGS specification sections 02930A EXTERIOR PLANTING and 02935A EXTERIOR PLANTING MAINTENANCE.

1.7.7 Turf

1.7.7.1 Soil Preparation

Prior to seeding or sodding, all surface soils shall be loosened to a minimum depth of 12 inches and broken up to a fine, workable texture suitable for seeding and sodding. Areas within the limits of sod and irrigation shall have 3 cubic yards per 1000 square feet of manure worked into the top 6 inches of soil.

1.7.7.2 Seeding and Sodding

All areas near the front entrance shall be sodded and irrigated as indicated on the plans. Other areas not sodded shall be seeded with field grasses and have only temporary irrigation to establish the turf. See the Landscape plans for exact locations. All newly turfed areas shall be fertilized with 18-46-0 fertilizer at the rate of 4.6 lbs per 1,000 square feet. All seeded areas shall be seeded by hydromulching techniques using 75 lbs. of green-tinted wood-fiber hydromulch per 1,000 square feet drilling with a Brillon-type seeder or broadcast seeded. Seeding and sodding shall be specified in UFGS Sections 02921A SEEDING and 02922A SODDING.

1.7.7.3 Sod

Sod shall be state-certified as classified by applicable state laws. Sod shall be locally grown and be comprised of a mixture of improved varieties of Turf Type Tall Fescue. It shall be free of thatch, diseases, nematodes, soil-borne insects, weeds or undesirable plants, stones larger than 2 inches

in any dimension, woody plant roots and other material detrimental to a healthy stand of turf. Dry moldy, yellow, irregularly shaped, torn or uneven end sod pieces shall be rejected. Sod shall be machine cut to a uniform thickness of 1-1/2 inches within a tolerance of 1/4 inch, excluding top growth and thatch. Measurement for thickness shall exclude top growth and thatch. Sod anchors shall be used as recommended by the sod supplier.

1.7.7.4 Seeding

Field Grass Seed Mixture

	% Mixture	Mixture lbs per 1,000 square feet
Sideoats Grama	10	0.60
Western Wheatgrass	10	0.60
Buffalo Grass (Tatanka or Sharps)	25	1.50
Blue Grama	25	1.50
Annual Ryegrass	30	1.80
Total	100%	6 lbs per 1,000 sf

Turf Type Tall Fescue seed mixture

Mixture	% Mixture	lbs per 1,000 square feet
Jaguar	25	2.o
Masterpuece	25	2.0
Rembrandt	25	2.0
SR-8500	25	2.0
Total	100%	8 lbs per 1,000 sf

a. Weed seed shall not exceed 1 percent by weight of the total mixture. Wet, moldy, or otherwise damaged seed shall be rejected. Seed mixing shall be performed by the seed supplier prior to delivery to the site. Bulk quantities of seed shall be labeled.

b. Provide selected seed mixture to the COR for approval. The seed mixture will be designed to be tolerant to the moisture levels of the area. All areas that are disturbed, excluding the landscape mulched areas, will receive this mixture.

c. All seeded areas shall be watered with temporary lawn sprinklers for a period of sixty (60) days. Areas shall be watered as required for the ground to remain moist during the first three weeks of sprinkling. Beginning with the fourth week of sprinkling, the areas shall be watered every other day, delivering 1/2 inch of water to the ground for each watering day, for the remainder of the sixty (60) day period.

1.7.8 Irrigation Sprinkler System

The irrigation systems shall be specified in UFGS Section 02811A UNDERGROUND SPRINKLER SYSTEMS.

a. All sodded and High Intensity Landscape Zone areas shall be lawn irrigated. Existing irrigation lines or components disturbed by construction activities shall be replaced or restored to their original working condition within two (2) days after being damaged or shut down.

b. The irrigation system shall consist of standard, commercially-available components. The components shall be products of manufacturers

regularly engaged in the manufacture of such items and shall essentially duplicate those that have been in satisfactory operation at Schriever AFB for at least two years.

c. The sprinkler system shall be completely underground, automatically operated by a central sprinkler controller, and capable of providing the required amount of water to the lawns and newly planted trees and shrubs as required in this contract. The lawn sprinkler pop-up heads shall be designed to be adjustable for coverage and flow. Water to irrigate the trees and shrubs shall be supplied by a drip or trickle irrigation system. Irrigation system shall operate through a backflow prevention device with inline pressure regulating devices, filters, control valves, vacuum relief valves, flush valves, and pressure compensating drip heads. Supply all necessary tools and equipment for complete installation.

d. Head spacing shall not be less than the manufacturer's recommendations for the type and sizes of trees and shrubs installed and the area of turf to be sprinkled. The Contractor shall submit design calculations for review on this matter. The Contractor shall also provide design drawings that include typical head spacing, system layout, pipe size, layout, and pressures. All components shall be shown on the irrigation plans for review.

e. A reduced pressure principle backflow preventer shall be installed between the irrigation system and the potable water system. The backflow preventer shall be installed in the mechanical room. A strainer shall be installed upstream of the backflow preventer with a screening element compatible with the emitters or sprinkler heads used and as recommended by the manufacturer. Provide a self-draining, freeze-proof, shut-off valve upstream of the backflow preventer and strainer. Vacuum breakers shall not be used in lieu of the reduced pressure principle backflow preventer. The system shall also be equipped with a quick coupler valve immediately outside the building for blowing water out of the system at the end of the season. The air connection shall be located downstream of the backflow preventer and strainer.

f. High points in the irrigation system shall be equipped with a combination air/vacuum relief valves.

1.8 PAVEMENT AND SIDEWALK

1.8.1 Pavement Section

Pavement for the dumpster area and the approach apron to the grass paver service drive off of Discoverer Street shall be a minimum of 6 inches of Portland Cement (P.C.) concrete over 6 inches of rigid base course over 6 inches of compacted subgrade..

1.8.2 Rigid Pavement Joint Layout

A typical joint layout for plain concrete road intersections is shown in Figure 13-1 of TM 5-822-5. A typical joint layout for plain concrete roads and parking areas is shown in Chapter 15 of TM 5-822-5. Spacing and layout of joints in plain concrete pavement shall be such that the number of slabs requiring reinforcement will be kept to a minimum. Odd-shaped slabs should be reinforced in two directions normal to each other using a minimum of 0.05 percent of steel in both directions. The entire area of the slab should be reinforced. An odd-shaped slab is considered to be one in which the longer dimension exceeds the shorter dimension by more than 25 percent

or a slab which essentially is neither square nor rectangular. Odd-shaped slabs will generally be reinforced with steel welded wire fabric. Slabs in which a structure is placed shall also be reinforced with welded wire fabric. Each slab to be reinforced with welded wire fabric will be marked with an "R" on the joint layout plan. Details showing typical layout of joints at intersection as indicated in Figure 13-1 of TM 5-822-5 will be provided when applicable.

1.8.3 Sidewalks

P.C. concrete sidewalks shall be a minimum of 4 inches thick. Expansion joint spacing shall not exceed 40 feet.

1.8.4 Utility Crossings

All utilities will be tunneled or bored under existing streets, structures, fencing or utilities that are perpendicular in direction.

1.8.5 Pavement Specifications

Pavements shall be constructed in accordance with CEGS specification Section 02560 (COLORADO) PAVEMENTS FOR SMALL PROJECTS and the paragraphs below. Specific references to the Colorado State Department of Transportation Highway Specifications are indicated within the guide specification. The unit price clauses in the CDOT specifications shall not apply.

1.8.5.1 Rigid Base Course

Rigid base course shall be placed directly underneath P.C. concrete. Rigid base shall serve as a separation and/or filter layer and shall conform to the requirements found in CEGS specification Section 02560 (COLORADO) PAVEMENTS FOR SMALL PROJECTS and shall have a California Bearing Ratio (CBR) of at least 50. Aggregates shall consist of crushed quarry stone, crushed gravel (2 or more fractured faces) or a combination crushed gravel with fines.

1.8.5.2 P.C. Concrete Pavement

P.C. concrete for pavement shall have a minimum compressive strength of 4000 psi at 28 days age. P.C. concrete shall conform to the requirements in CEGS specification Section 02560 (COLORADO) PAVEMENTS FOR SMALL PROJECTS. Type II cement shall be used in the production of concrete. For concrete with an exterior exposure, air-entrainment, producing a total air content in the concrete between 4 and 7 percent by volume, shall be required.

1.8.5.3 Joint Sealing

Field molded joint sealant shall be specified in CEGS specification Section 02560 (COLORADO) PAVEMENTS FOR SMALL PROJECTS.

1.8.5.4 Concrete Sidewalks and Curbs and Gutters

P.C. concrete for sidewalls and curbs and gutters shall have a minimum compressive strength of 3000 psi at 28 days age. Concrete sidewalls and curbs and gutters shall be specified in CEGS specification Section 02560 (COLORADO) PAVEMENTS FOR SMALL PROJECTS. Type II cement shall be used in the production of concrete. For concrete with an exterior exposure,

air-entrainment, producing a total air content in the concrete between 4 and 7 percent by volume, shall be required. Expansion joints in P.C. concrete sidewalks shall be sealed with cold-applied sealant which is stone or grey in color.

1.9 GRADING

1.9.1 General

Positive drainage shall be provided for all areas and existing drainage ways shall be utilized to the extent possible. Drainage will be directed away from buildings to curb and gutter or drainage structures. Swales between buildings and parking areas shall be avoided if possible. Earthwork shall be balanced to the extent possible without compromising the design. The Contractor shall coordinate all drainage improvements with the Schriever AFB storm drainage study. Grading shall be specified in UFGS specification Section 02300A EARTHWORK. The Contractor shall be responsible for editing the specification for the project.

1.9.2 Adjustment of Existing Structures

All manholes, valve boxes, or inlets of any nature within the project that do not conform to the new finish grade in either surfaced or unsurfaced areas shall be adjusted to the new finish grade. Where inlets, manholes, or valve boxes fall within a surfaced or unpaved roadway or parking, the existing frames and cover shall be removed and replaced with a heavy-duty frame and cover. The structure shall be adjusted as needed to fit the new conditions. All structures shall be of a type suitable for the intended use and shall conform to the requirements of the applicable section of these specifications.

1.9.3 Borrow and Waste

Borrow materials shall be obtained from sources outside the limits of Government-controlled land. The source of borrow material shall be the Contractor's responsibility. The Contractor shall obtain from the owners the right to procure material, shall pay all royalties and other charges involved, and shall bear all the expense of developing the sources, including rights-of-way for hauling. Surplus excavated material not required for fill shall be disposed of by the Contractor at his own expense and responsibility outside the limits of Government-controlled land.

1.9.4 Sidewalks and Curb and Gutter

Concrete walks shall have a transverse grade of 2 percent. Maximum desirable longitudinal walk grade shall be 4 percent and an absolute maximum grade of 8.33 percent. Special attention shall be given to sidewalks that are on the north (shaded) side of buildings. These walks should be designed to ensure a freeze/thaw cycle does not result in the formation of ice on the walk. Ice on walks should be a safety consideration for all areas. The use of steps in walks will be avoided whenever possible. The use of single riser steps is especially discouraged. When steps are unavoidable, they should have at least three risers and will be provided with handrails.

1.9.5 Transverse Parking Area Grades

a. Desirable minimum of 2 percent.

b. Absolute minimum of 1 percent for rigid pavement.

c. Maximum of 2 percent at handicap parking.

1.9.6 Longitudinal Parking Area Grades

Maximum of 4 percent.

1.9.7 Ramp Grades

a. Desirable maximum of 7 percent.

b. Absolute maximum of 10 percent for short distances only.

1.9.8 Gutter Grades

a. Desirable minimum of 0.8 percent.

b. Absolute minimum of 0.5 percent.

1.9.9 Grades Away From Building

a. Minimum of 5 percent for 10 feet.

b. Maximum of 10 percent for 10 feet.

1.9.10 Overlot Grades

Provide positive drainage for all areas.

a. Minimum 1 percent for cohesionless sandy soils.

b. Minimum 2 percent for cohesive soils or turfed areas.

1.9.11 Ditch Slopes

Minimum grade of 1.0 percent for channelized flow.

1.9.12 Ditches

Ditches shall be graded at non-erodible slopes or the ditch shall be lined with an appropriate material to prevent erosion. A design storm with a return period of at least 2 years shall be used to determine erodibility of ditches and swales. The depth of ditches along pavement shoulders shall be such that the water surface from the 10 year design storm is below pavement subbase and base courses which daylight through the adjacent shoulder.

1.10 STORM DRAINAGE

1.10.1 Determination of Storm Runoff

For areas of up to about 1 square mile, where only peak discharges are required for design and extensive ponding is not involved; the computation of runoff will be accomplished by either the Rational Method or the modified rational method presented in TM 5-820-1. For larger areas, when suitable unit-hydrograph data are available or where detailed consideration of ponding is required, computation should be by unit-hydrograph and flow-routing procedures. If the method presented in TM 5-820-4 is used to determine the peak discharge, the minimum time of concentration for turfed

or paved areas shall be 5 minutes.

1.10.1.1 Design Storm Return Period

Storm drains and culverts shall be sized for a design storm with a return period of 10 years. Provisions shall be made to protect all buildings and critical structures from a major storm event with a return period of 100 years.

1.10.1.2 Rainfall Depth-Duration-Frequency Data

Rainfall data for states in the western United States shall be obtained from NOAA ATLAS 2. Rainfall intensity-duration data developed by cities or regions may be used if available.

1.10.2 Storm Drainage System Design

The Contractor shall be responsible for the complete design of the storm drainage system. The new storm drainage system shall be coordinated with surrounding properties to ensure runoff does not cause damage to the other properties. The use of existing and or new storm water detention areas is encouraged. Storm water shall be collected by an underground storm drainage system. The Contractor shall coordinate all drainage improvements with the Schriever AFB storm drainage study.

Submittal of pipe samples is not required. The Contractor shall refer to the Corps of Engineers standard details for any storm drain details required by the design. The standard details are available at the Corps FTP site. The Contractor shall provide details for any other drainage structures not found in the Corps standard details.

The storm drainage system shall be designed so as to minimize the number of drainage structures required. Structures shall be located at all changes in direction of storm drain line, at the intersection of two or more storm drain lines, and where required to intercept rainfall runoff. The maximum distance between drainage structures shall be approximately 300 feet for conduits less than 30 inches in diameter. The maximum distance between drainage structures shall be approximately 500 feet for conduits 30 inches and greater in diameter.

Storm runoff in streets and parking areas with curbing shall be collected using curb inlets or area inlets. The use of curb openings with flumes to drain water from streets and parking areas with curbing shall not be permitted. Drainage of runoff from turfed areas onto pavements shall be minimized. Where possible, a minimum drop of 1/4 inches between inverts of equal diameter storm drain pipes shall be provided at the centerline of drainage structures. Where storm drain pipes are of different diameters, the pipe crown elevations should be matched at the drainage structure. Storm drain pipes shall have a minimum diameter of 1 foot. Storm drain lines shall be located outside of paved areas to the extent possible. Under no circumstance shall storm drain lines be located beneath buildings.

1.10.2.1 Hydraulic Design

New storm drain pipes shall be designed for gravity flow during the 10-year design storm unless otherwise approved by the Government. The hydraulic grade line shall be calculated for the storm drain system and all energy losses accounted for. Storm drain systems shall be designed to provide a minimum flow velocity of 2.5 feet per second when the drains are one-third

or more full.

1.10.2.2 Manholes

Diameter of manholes shall be large enough to accommodate pipes entering/exiting the manhole. Manhole cast iron frames shall have a minimum opening diameter of 2 feet. Galvanized steel ladders shall be provided in all manholes with a depth exceeding 12 feet.

1.10.2.3 Area Inlets

Area inlets shall be properly sized and designed to accommodate the design flows.

1.10.2.4 Curb Inlets

Locating parking area curb inlets at building entrances shall be avoided if possible. Curb inlets along two-lane streets shall be spaced and sized so that the flow in the gutter and ponded areas at low points do not cover the crown of the street.

1.10.2.5 Head walls and Flared End Sections

Unless otherwise approved, head walls or flared end sections shall be provided at the ends of culverts and at storm drain outfalls. Protection from erosion and scouring at head wall and flared end section outfalls shall be provided as needed.

1.10.3 Downspouts and Roof Drains

Downspouts and interior roof drains shall be connected to an underground drainage system. Roof drain outfall lines beyond 5 feet from the building shall be of the same materials as the exterior storm drainage system. Minimum diameters shall be 1 foot for lengths over 50 feet and 8 inches for lengths under 50 feet. In addition, the diameter shall be at least 2 inches larger than the diameter of the line as it leaves the building. All changes in direction of outfall lines shall occur at storm drain structures except that cleanouts may be used in lines smaller than 1 foot.

1.10.4 Storm Drain and Culvert Pipe

The Contractor shall select the appropriate storm drain and culvert pipe materials from the options specified in the Omaha District design specifications. Pipe, bedding, and backfill shall be of adequate strength (or stiffness) to support the earth, live, and construction loads imposed on the pipe. Only pipe materials which have a minimum design service life of 50 years shall be allowed for permanent installations. As a minimum, all pipe joints shall be soil tight. The Contractor shall specify watertight pipe joints and flexible resilient pipe connectors at drainage structures when the water table is at or above the pipeline.

1.10.4.1 Concrete Pipe

Reinforced concrete pipe shall be a minimum of Class III. Type I cement may be used only when sulfates in the soil are 0.1 percent or less and dissolved sulfates in the effluent are 150 ppm or less. Type II cement may be used only when sulfates in the soil are 0.2 percent or less and dissolved sulfates in the effluent are 1,500 ppm or less. Only Type V cement may be used if sulfates in the soil exceed 0.2 percent or dissolved

sulfates in the effluent exceed 1,500 ppm. Concrete pipe shall be assumed to have a minimum design service life of 50 years unless the Contractor determines that conditions at the site will reduce the service life. Concrete culverts and storm drains shall be protected by a minimum of 3 feet of cover during construction to prevent damage before permitting heavy construction equipment to pass over them during construction.

1.10.4.2 Corrugated Metal Pipe

The service life of corrugated metal pipe shall be the sum of the lives of the nonmetallic protective coating, the metallic protective coating, and the basic metal pipe. The life of the basic metal pipe and metallic protective coating shall be the time to first perforation. The time to first perforation for corrugated steel pipe shall be determined using the California Chart (California Division of Highways Test Method 643-B). Corrugated metal pipe shall not be allowed in areas where previous satisfactory service has not been achieved. Zinc-coated corrugated steel pipe shall not be allowed if the soil and water pH is less than 6 or greater than 8 or the minimum soil resistivity for the site is less than 2,500 ohm-cm. Aluminum-coated corrugated steel pipe shall not be allowed if the soil and water pH is less than 6 or greater than 9 or the minimum soil resistivity for the site is less than 1,500 ohm-cm. Bituminous coatings shall have a maximum allowable add-on service life of 10 years on the soil side and 2 to 10 years on the water side of the pipe. Stiffness of the corrugated metal pipe and soil envelope shall be such that the predicted long-term deflection shall not exceed 5.0 percent. Corrugated metal culverts and storm drains shall be protected by a minimum cover as recommended in Section 26 of AASHTO HB-16 during construction to prevent damage before permitting heavy construction equipment to pass over them during construction.

1.10.4.3 Plastic Pipe

Stiffness of the plastic pipe and soil envelope shall be such that the predicted long-term deflection shall not exceed 7.5 percent. Plastic culverts and storm drains shall be protected by a minimum of 3 feet of cover during construction to prevent damage before permitting heavy construction equipment to pass over them during construction. Split couplers shall not be allowed for corrugated high-density polyethylene pipe. Plastic pipe shall be assumed to have a minimum design service life of 50 years unless the Contractor determines that conditions at the site will reduce the service life.

1.11 FOUNDATION DRAINAGE SYSTEM

1.11.1 General

Foundation drains shall be provided around the entire outside perimeter of the foundations only for the optional crawl spaces. The Design Build Contractor shall provide layout and details of the foundation drainage system as part of the design package. The foundation drain shall consist of 4 or 6-inch diameter perforated pipe surrounded by free-draining granular material. The drainage material should extend a minimum of two pipe diameters around the circumference and should be surrounded by an 8-oz. non-woven geotextile to prevent fines migration into the material. The perforated pipe itself should not be wrapped. The drain shall be located a minimum of 6 inches below the bottom of the footing. Flows generated by the foundation drain shall be discharged into an underground storm drainage system. Foundation drains shall not be tied into the

sanitary sewer system. A gravity system is preferred, but the depth of the crawl space may require a pump system. If pumping is necessary, provide one pump location and gang the drainage tile together. Locate the pump station in the utility yard. No pumps will be allowed inside of the crawl space.

1.11.2 Foundation Drainage Design

The Design Build Contractor shall submit drawings and details of the foundation drainage system. As a minimum provide typical cross section at the foundation, location of all drainage pipe, lift station, force main, and discharge point. Specification shall be provided for approval covering the work, materials and equipment as well as engineering calculations supporting the selection of piping and equipment. The Design Build Contractor shall verify the drainage capacity and invert elevations to ensure that the drainage system is adequate for the flows generated by the family housing units. Force mains and lift stations shall be designed in accordance to TI-814-10.

1.11.3 Foundation Drain Pipe

The Contractor shall provide foundation drainage pipe in accordance with UFGS Specification SECTION 02620A SUBDRAINAGE SYSTEM.

1.11.4 Foundation Drain Force Main Pipe

The Contractor shall provide foundation drainage force main pipe in accordance with UFGS Specification SECTION 02532A FORCEMAINS AND INVERTED SIPHONS, SEWER.

1.11.5 Lift Station

Lift station shall be a simplex submersible sump pump rail system package with a shutoff and check valve located in a 24-inch diameter basin with cover and shall be fully assembled for outside installation. The covers shall be the type to withstand vehicle loading or the stations shall be protected from traffic loads. The lift station shall be located within utility yard. The lift station shall be provided with lifting chain, quick-connect rail system, discharge piping, inlet flange, junction box, start-stop level controls, high water alarm, internal wiring, external alarm and pump control panel, sump pump and motor, concrete hold-down pad, control panel with alarm light, etc.

1.11.6 Sump Pump

An exterior electric sump pump shall be provided for the foundation drainage system. A plug connector is required. Provide a compatible grounding outlet for a plug and cord type electrical connection. The pump shall be of the automatic, electric motor-driven, submerged type, complete with necessary control equipment and with a split or solid cast-iron or steel cover plate. The pump shall be direct connected by an approved flexible coupling to a vertical electric motor having a continuous oiling device or packed bearings sealed against dirt and moisture. Motors shall be totally enclosed, fan-cooled and shall be equipped with an across-the-line magnetic controller in a NEMA 250, "Enclosures for Electrical Equipment (1000 Volts Maximum)", Type 4 enclosed, across-the-line, magnetic controller. The pump shall be fitted with a high-grade thrust bearing mounted above the floor. Each shaft shall have an alignment bearing at each end, and the suction inlet shall be between 75

and 150 mm (3 and 6 inches) above the sump bottom. The suction side of the pump shall have a strainer of ample capacity. A float switch assembly, with the switch completely enclosed in a NEMA 250; Enclosures for Electrical Equipment (1000 Volts Maximum), Type 4 enclosure, shall start and stop each motor at predetermined water levels. The discharge line from the pump shall be provided with a union or flange, a non-clog swing check valve, and a stop valve in an accessible location near the pump.

1.12 EROSION AND SEDIMENT CONTROL

The Contractor shall be responsible for selecting and implementing Best Management Practices (BMPs) to minimize pollutants in storm water discharges associated with construction activity at the construction site. All erosion and sediment measures and other protective measures shall be maintained by the Contractor in effective operating condition. All temporary structural practices shall be removed once the corresponding disturbed drainage area has been permanently stabilized. In the State of Colorado, EPA has authority for the National Pollutant Discharge Elimination System (NPDES) on Federal Facilities. If construction activities results in the disturbance of 1 acre of land or more, coverage under the EPA Storm Water General Permit For Construction Activities (Colorado Permit No. COR10*##F) is required. The Contractor and the Omaha District Corps of Engineers shall be co-permittees. The Contractor shall be responsible for complying with the requirements in Section 01355 ENVIRONMENTAL PROTECTION and with the requirements of Section 01565 (FEDERAL FACILITIES COLORADO) NPDES PERMIT REQUIREMENTS FOR STORM WATER DISCHARGES FROM CONSTRUCTION SITES. The Contractor shall be responsible for editing and applying the requirements of Section 01356 STORM WATER POLLUTION PREVENTION MEASURES. If coverage under the NPDES Permit is not required, Specification Section 01565 shall not be applicable.

1.12.1 Temporary Construction Entrance

Tracking of mud from the construction site onto adjacent roads and streets shall be kept to a minimum. A temporary stabilized stone pad shall be constructed at points where vehicular traffic will be leaving the construction site and moving directly onto a paved road or street. It shall extend the full width of the vehicular ingress and egress area and have a minimum length of 80 feet. The entrance shall be maintained in a condition which will prevent tracking or flow of mud onto adjacent roads or streets. If conditions on the site are such that the majority of the mud is not removed by the vehicles traveling over the stone, the the tires of the vehicles shall be washed before entering the road or street. Any mud which is tracked onto roads or streets shall be removed at least once daily.

1.12.2 Surface Preparation

All areas disturbed by construction will be replaced as xeriscape.

1.12.3 Erosion Control Blanket

Bottoms and side slopes of ditches and any other disturbed slopes 1V on 3H or steeper shall be covered with an erosion control blanket immediately after seeding.

1.12.4 Silt Fence

Silt fencing shall be installed below disturbed areas where erosion would occur in the form of sheet and rill erosion. The size of the drainage area

above the silt fence shall not exceed one fourth of an acre per 100 feet of silt fence length. Silt fencing may be installed across ditches only when the maximum contributing drainage area is not greater than 1 acre. Silt fence constructed across a ditch shall have wire support and shall be of sufficient length to eliminate end flow.

1.12.5 Straw Bale Barrier

Straw bale barriers may not be installed across ditches.

1.12.6 Outlet Protection

Preformed rip rap lined scour holes or other suitable measures shall be installed at outlets of culverts and storm drains as needed to prevent erosion.

1.12.7 Storm Drain Inlet Protection

Storm drain inlet protection shall be installed around any new or existing storm drain inlets that will become operational before permanent stabilization of the corresponding disturbed drainage area has occurred. Storm drain inlet protection shall include either a sediment filter or an excavated area around the storm drain inlet.

1.12.8 Rock Check Dam

Rock check dams may be installed in ditches which drain 2 to 10 acres. The allowable drainage area will be dependent on the gradation of the rock used to construct the check dam. The maximum height of the dam shall be 3 feet. The center of the dam shall be at least 6 inches lower than the outer edges. For added stability, the base of the check dam may be keyed into the soil approximately 6 inches. The maximum spacing between the dams should be such that the toe of the upstream dam is at the same elevation as the top of the downstream dam.

1.12.9 Temporary Sediment Trap

Temporary sediment traps may be constructed below disturbed areas where the total drainage area is less than 3 acres.

1.12.10 Temporary Sediment Basin

Temporary sediment basins may be constructed below disturbed areas where the total drainage area is equal to or greater than 3 acres.

1.12.11 Other Controls

Other controls such as diversion dikes, level spreaders, temporary seeding, etc. may be used if deemed necessary by the Contractor.

1.13 UTILITIES

The Contractor shall avoid running utilities underneath buildings, streets, and parking lots. In cases where it is necessary for the utilities to cross existing streets, the Contractor shall install the lines by boring and jacking methods. No open trenching will be allowed through existing streets unless written permission is obtained and approved by the Contracting Officer.

1.13.1 CATHODIC PROTECTION

Corrosion protection shall be provided for all buried gray or ductile-iron piping, coated piping, fittings, valves, and other water line appurtenances, regardless of pipe material. Corrosion protection shall consist of an anode type cathodic protection system. See Section 01007 Electrical Requirements.

1.13.2 WATERLINES

a. All waterlines shall comply with applicable Local, State and Federal standards. Local and State standards shall dictate unless the Federal standards are more stringent. Water distribution systems and service lines shall be designed and constructed in accordance with TI 814-1and TI 814-3, applicable U.S. Army Corps of Engineers Guide Specifications requirements. The Contractor shall be responsible for protection of existing waterlines. If any potable waterlines are damaged during construction, the Contractor must immediately notify the Contracting Officer and the Base Civil Engineering (CE) Office. The Contractor shall disinfect all new water lines and any remaining lines which do not remain fully pressurized during construction or connection. The Contractor shall notify the Contracting Officer and the Base CE Office prior to disinfection of the water lines. The disinfection shall be in accordance with the American Water Works Association Standard AWWA C651,(1992), and shall not be considered complete until two consecutive days of bacteriological samples show no contamination. All bacteriological, lead and copper tests shall be performed by Environmental Protections Agency (EPA) certified laboratories. Copies of results of the analyses shall be forwarded to the Contractor upon receipt.

b. The Contractor shall design and provide all facilities required to deliver water to the project. Service connections or extensions to the existing water distribution system shall be made without interruption to service. The domestic demand for the new facility served shall be designed in accordance with the Uniform Plumbing Code Fixture Count Method. For design of the waterlines, use maximum Hazen-Williams "C" value of 130 for plastic pipe and 120 for other pipe materials.

1.13.2.1 Water Distribution and Service Lines

a. Flow Requirements

Water shall be supplied by service lines of appropriate capacity to provide the flows determined to be necessary to meet all requirements of the new facility. The requirements include all domestic use, interior and exterior fire protection water, and lawn sprinkler/irrigation systems, as required.

b. Service Connections

A maximum velocity of 10 feet per second shall be used for metallic piping and 5 feet per second shall be used for nonmetallic piping. Service connections shall be made via corporation stops, appropriate gooseneck connections, or tapping sleeves and valves. The number and maximum size of corporations stops shall be as specified.

c. Dewatering, Hydrostatic Testing, and Flushing of Lines

The Contractor shall be responsible for implementing the terms and requirements of Section 01355 ENVIRONMENTAL PROTECTION for dewatering,

hydrostatic testing, and flushing of lines after disinfection.

d. Domestic Service Stop Valve

Building shall be provided with separate service and stop valves in areas readily accessible to maintenance and emergency personnel. Stop valves located in walks are prohibited.

1.13.2.2 Dedicated Fire Water Service Lines

a. Fire Flow Data

For determination and documentation of fire protection, the Contractor shall conduct and provide all fire hydrant flow tests. Data to be included with the flow tests are static pressures, residual pressures, flowrates, date, domestic and fire pumps in operation at the pumphouse, time tests were conducted, and name of personnel conducting the fire hydrant flow tests. The static pressures, residual pressures, flowrates, test hydrant and flow hydrants shall be shown on the appropriate contract drawings. Fire hydrant flow tests required for fire protection design shall be made in accordance with the procedures specified in AWWA M17, 1989 (Installation, Field Testing, and Maintenance of Fire Hydrants). The Contractor shall coordinate with the Contracting Officer, Schriever AFB Fire Department, and the Base CE prior to conducting such tests. The Contractor shall submit fire hydrant flow test data with the design calculations. The Contractor shall become familiar with the water system at Schriever AFB prior to conducting the hydrant flow tests.

b. Fire Hydrants

The Contractor shall be required to install fire hydrants for the new facility. One fire hydrant shall be located within a minimum of 150 feet of the building fire department connection. All other hydrants shall be located in accordance with MIL-HDBK-1008C. Fire hydrant styles shall meet the requirements of Schriever AFB.

c. Dedicated Fire Line

The Contractor shall be required to provide a separate fire water service line to the building for interior fire sprinkler protection in accordance with NFPA 24, 1995, and MIL-HDBK-1008C. The fire water service line to the building shall be equipped with a Post Indicator Valve (PIV) that can be readily located by the fire department. The PIV shall not be placed closer than 40 feet to the building it is serving and shall be provided with a tamper switch connected to the building fire control panel. The PIV shall be protected by 6 inch steel pipe bollards, filled with concrete, painted and spaced in accordance with Schriever AFB requirements. The PIV will be linked to the Base DDC system.

1.13.3 WASTEWATER

All wastewater lines shall comply with applicable Local, State, and Federal standards.

1.13.3.1 Design Criteria

Sewage system shall be designed and constructed in accordance with State and local criteria unless the Federal standards are more stringent. If the Federal standards are more stringent, the sewage system shall be designed

and constructed in accordance with TI 814-10 and applicable UFGS Guide Specifications. The Contractor shall field verify the sanitary sewer system capacity and invert elevations to ensure that it is adequate for the flows generated by the new facilities. No interruption of service shall be allowed on the existing sanitary sewer line. The Contractor shall coordinate the sequencing of construction as it affects the existing sanitary sewer line with the Contracting Officer and the Base CE Office. Exterior building sanitary sewer service lines shall be 6 inch minimum diameter. The minimum pipe size between manholes shall be 8 inch. All design slopes will be calculated using the Manning formula. The Contractor shall provide all calculations.

1.13.3.2 Manholes

Manholes are required at all changes of direction, slope, and size. Manholes shall be spaced not more than 300 feet apart. Manholes shall be located at intersections of streets when possible. Avoid placing manholes where the tops will be submerged or subject to surface water inflow. Where the invert of the inlet pipe would be more than 1.5 feet above the manhole floor, a drop connection will be provided. The Contractor shall provide all calculations. Manholes 12 feet deep or greater shall be provided with a ladder.

1.13.4 Gas Distribution System

See Section 01006 MECHANICAL REQUIREMENTS for instructions and engineering information relating to the design of the exterior gas distribution system.

1.14 EXCAVATION, TRENCHING, AND BACKFILLING FOR UTILITIES SYSTEMS.

1.14.1 Trenches

Jacking and boring shall be required when an underground utility line crosses any roadway. Sewer and water lines, mains or laterals, shall be placed in separate trenches. The separate trenches shall maintain a minimum horizontal separation of 10 feet and the bottom of the water line shall be at least 1.5 feet above the top of the sewer. Sewers crossing above potable water lines shall maintain a vertical separation of 1.5 feet and must be constructed of suitable pressure pipe or fully encased in concrete for a distance of 10 feet on each side of the crossing.

The trench shall be excavated as recommended by the manufacturer of the pipe to be installed. Bedding and initial backfill material shall be in accordance with the manufacturers recommendations. Where no manufacturer's installation manual is available, trench walls shall be excavated to a stable angle of repose as required to properly complete the work. Trench excavations shall adhere to requirements prescribed in EM 385-1-1, September 1996, Safety and Health Requirements Manual. Special attention shall be given to slopes which may be adversely affected by weather or moisture content.

PART 2 NOT USED

PART 3 NOT USED

-- End of Section --

This page was intentionally left blank for duplex printing.

SECTION TABLE OF CONTENTS

DIVISION 01 - GENERAL REQUIREMENTS

SECTION 01003

ARCHITECTURAL BUILDING REQUIREMENTS

PART 1 ARCHITECTURAL BUILDING REQUIREMENTS

1.1 FUNCTIONAL PLAN REQUIREMENTS
1.2 DESIGN CRITERIA
1.2.1 TECHNICAL SPECIFICATIONS
1.2.2 PUBLICATIONS
1.2.2.1 National Fire Protection Association
1.2.2.2 International Code Council
1.2.2.3 Military Handbooks
1.2.2.4 Unified Facilities Criteria (UFC)
1.2.2.5 American with Disabilities Act (ADA)
1.2.2.6 Occupational Safety and Health (O.S.H.A.) standards
1.2.2.7 Aluminum Association (AA)
1.2.2.8 American Architectural Manufacturers Association (AAMA)
1.2.2.9 Tile Council of America (TCA)
1.2.2.10 Director of Central Intelligence Directive 1/21
1.3 DESIRED IMAGE AND ARCHITECTURAL COMPATIBILITY
1.4 TYPE AND METHOD OF CONSTRUCTION
1.4.1 Facility Construction
1.4.2 Exterior Walls and Finish Materials
1.4.3 Interior Wall Construction
1.4.4 Interior Wall Finishes
1.4.5 Floors (See Room Finish Schedule)
1.4.6 Floor Finishes
1.4.7 Ceiling Finishes
1.4.8 Ceiling Height (See Room Finish Schedule)
1.5 FUNCTIONAL REQUIREMENTS
1.5.1 Equipment and Furnishings
1.5.1.1 Contractor Furnished and Contractor Installed Equipment (CFCI)
1.5.2 Occupational Safety and Health
1.5.3 Handicapped Accessibility
1.5.4 Sound and Vibration Control
1.5.5 Physical Security
1.5.6 Composition of Masses, Spaces and Architectural Details to Reflect the Desired Image, Scale and Nature of the Activities Involved
1.5.7 Economy of Building Construction, Operation, and Maintenance: Life-Cycle Cost Effectiveness
1.5.7.1 Economy
1.5.7.2 Operations and Maintenance
1.6 TECHNICAL REQUIREMENTS
1.6.1 CONCRETE
1.6.1.1 Precast Architectural Concrete
1.6.2 Miscellaneous Metals
1.6.2.1 Access Doors and Panels
1.6.2.1 Louvers, Dampers, and Ductwork
1.6.2.2 Miscellaneous

1.6.3 Vapor Barrier
1.6.4 Bituminous Dampproofing
1.6.5 Roof Insulation
1.6.6 Roof Design
1.6.6.1 Built-Up Roofing (BUR)
1.6.7 Sheet Metalwork, General
1.6.8 Doors
1.6.9 Hardware; Builder's (General Purpose)
1.6.9.1 Hinges
1.6.9.2 Locks and Latchsets
1.6.9.3 Lock Cylinders
1.6.9.4 Lock Trim
1.6.10 Keying
1.6.11 Door Closing Devices
1.6.12 Auxiliary Hardware
1.6.13 Finishes
1.6.14 Door Hardware
1.6.14.1 Hardware Requirements
1.6.14.2 Hardware Sets
1.6.15 Key Storage System
1.6.16 Door Glazing
1.6.17 Aluminum Windows
1.6.18 Glass and Glazing
1.6.18.1 Insulated Laminated Glass
1.6.18.2 Glass Mirrors
1.6.19 Gypsum Wallboard
1.6.20 Tile
1.6.21 Ceilings
1.6.21.1 Gypsum Board Ceiling
1.6.21.2 Acoustical Tile Ceiling
1.6.22 Painting, General
1.6.22.1 Surfaces to Receive Paint
1.6.22.2 Surfaces Not to be Painted
1.6.23 Raised Floor System
1.6.24 HYDRAULIC ELEVATOR
1.6.25 Exterior Signage
1.6.26 Toilet Accessories
1.6.26.1 Accessory Types
1.6.26.2 Toilet Accessory Finishes
1.6.27 Fire Extinguisher Cabinets
1.6.28 Janitor's Closet Accessories
1.6.29 Cabinets and Counter Tops
1.6.29.1 Counter Tops and Backsplashes
1.6.29.2 Cabinet Specifications
1.6.29.3 Cabinet Hardware Finishes
1.6.30 Built-in Display Case
1.6.31 Benches
1.6.32 Lockers
1.6.33 Recessed Floor Mat And Frame
1.6.34 Woven Wire Mesh Storage Cages
1.6.35 Demountable Partitions
1.6.36 Motorized Projection Screen
1.7 ROOM DESCRIPTIONS
1.8 Guide Specifications

PART 2 NOT USED

PART 3 NOT USED

-- End of Section Table of Contents --

SECTION 01003

ARCHITECTURAL BUILDING REQUIREMENTS

PART 1 ARCHITECTURAL BUILDING REQUIREMENTS

1.1 FUNCTIONAL PLAN REQUIREMENTS

The architectural component of the project consist of a two story facility with an optional crawl space.

This facility is being designed to allow for its use by military personnel. The maximum occupancy of the working personnel in this facility will be 200 people, normally operating 14 hours a day, 7 days per week. The facility shall provide a quality environment for the 310th Reserve Space Group Command function and 4 of its operational squadrons. The facility will enhance the ability of Reserves and their operational squadrons to perform mission support functions, briefings/debriefings, planning, training, testing, safety, evaluations and scheduling within the new Consolidated Space Group Operations Facility.

The facility will consist of but is not limited to the following spaces: Administration, mission support, briefings/debriefings, planning, training, testing, safety, evaluations and scheduling, mechanical, electrical and communications rooms.

1.2 DESIGN CRITERIA

The technical specifications provided shall serve as the minimum design standards established for this project. Design publications listed in each specification section shall be used as sources of criteria for design. The criteria from these sources may be supplemented, but not supplanted, by applicable criteria contained in nationally recognized codes, standards, and specifications.

1.2.1 TECHNICAL SPECIFICATIONS

The UFGS technical guide specifications (available to Contractor as identified in Section 01332 and Attachment No. 3) shall be completely edited and fully coordinated with the drawings to accurately and clearly identify the product and installation requirements for this facility.

The provided specifications define the minimum requirements and level of quality for items of equipment, materials, installation, and testing that shall be provided for the facility. Where items of equipment, materials, installation, or testing requirements are not covered in the provided specifications; special sections or within each guide specification or new specifications sections shall be prepared to cover those subjects.

1.2.2 PUBLICATIONS

The design publications listed below shall be used as sources of criteria for the architectural design. The most current edition of the code or standard shall be used as criteria for the design. The criteria from these

sources may be supplemented but not supplanted, by applicable criteria contained in nationally recognized codes, and standards.

1.2.2.1 National Fire Protection Association

(2000) Life Safety Code #101

(1999) NFPA 80 Fire Doors and Windows

1.2.2.2 International Code Council

(2000) International Building Code

1.2.2.3 Military Handbooks

MIL HDBK 1190 - Facility Planing and Design Guide
Dated 1 September 1987

1.2.2.4 Unified Facilities Criteria (UFC)

DoD Minimum Antiterrorism Standoff Distances For Buildings
Dated 31 July 2002

1.2.2.5 American with Disabilities Act (ADA)

Accessibility Guidelines for Buildings and Facilities

1.2.2.6 Occupational Safety and Health (O.S.H.A.) standards

1.2.2.7 Aluminum Association (AA)

AA DAF-45 (1997) Designation System for Aluminum Finishes

1.2.2.8 American Architectural Manufacturers Association (AAMA)

AAMA 101 (1997) Voluntary Specification for Aluminum, Vinyl (PVC) and Wood Windows and Glass Doors

1.2.2.9 Tile Council of America (TCA)

1.2.2.10 Director of Central Intelligence Directive 1/21

Manual for Physical Security for Sensitive Compartmented Information Facilities (SCIF)
Dated 30 January 1994

1.3 DESIRED IMAGE AND ARCHITECTURAL COMPATIBILITY

The Proposer shall verify all drawings and provided information of conditions and dimensions during design and prior to construction.

The building shall fit the site and shall match existing Schriever Air Force Base (SAFB) Restricted Area Facility Architectural Guidelines. Building facades and elevations shall be similar in appearance to the enclosed elevation drawings and shall be compatible with the existing precast concrete panel architecture which is currently being utilized within the SAFB Restricted Area.

1.4 TYPE AND METHOD OF CONSTRUCTION

1.4.1 Facility Construction

Facility shall be designed as permanent construction. The definition of permanent construction per MIL HDBK 1190: Buildings and facilities designed and constructed to serve a life expectancy of more than 25 years, should be energy efficient, and must have finishes, materials, and systems selected for low maintenance, recycled materials, and low life-cycle cost.

Types and methods of construction shall be limited to the criteria established herein and shall meet all governing codes.

Wood construction shall not be permitted.

Any concrete masonry units walls used in this buildings shall be developed on a standard masonry module. Standardization of masonry wall design shall be developed which result in as few cut blocks as possible. Masonry structural properties shall comply with requirements outlined in Section 01005 STRUCTURAL REQUIREMENTS.

Walls, windows, floors,and roofing systems shall be permanently constructed and attached to each other. All construction shall be done in a workman like manner, properly installed and finished.

Methods, materials, systems, etc. shall be of a quality that requires little or no maintenance.

1.4.2 Exterior Walls and Finish Materials

Exterior walls and finish materials shall be selected on the basis of architectural compatibility and appearance in accordance with the design provided. The outside face of the exterior walls shall be composed of exposed aggregate concrete panels (as indicated on the drawings). Exterior walls shall have a minimum "U" Value of .07 based on aged insulation values for the entire exterior wall construction.

1.4.3 Interior Wall Construction

All interior walls as noted on the drawing shall be permanent construction.

Gypsum wallboard shall not be less than 5/8-inches thick.

Steel studs shall be sized according to the wall heights required, but in no case shall they be less than 3-5/8" in depth and 20 gage galvanized steel.

Interior walls requiring fire ratings or other walls extending to the underside of the roof or floor structure shall be designed and constructed in accordance with UL and approved tested systems. These walls shall also have provisions for structural deflection of the structure above.

1.4.4 Interior Wall Finishes

Interior wall finishes shall be low maintenance finishes suitable for the environment of this building.

All areas generally shall receive a painted finish except as described herein.

Toilet rooms shall receive full height porcelain tile. The walls shall be set using a Dry-Set mortar method in accordance with the Tile Council of America. Tile backer board shall be provided at toilet room and janitors closet.

Office areas shall have painted gypsum wallboard walls.

See paint paragraph for painting systems requirements.

Areas as noted on the Room Finish Schedule to receive chair rails shall be provided with 6-inch high by 1-1/4-inch deep continuous chair rails on all 4 walls from edge of door frame to edge of door frame and they shall be mounted with a top elevation of 3'-4", so that they pass just under the window openings. Chair rails shall be clear premium grade hardwood of a simple design to match other woodwork and cabinetry items provided under this contract. Finish shall be stain and varnish, color as indicated in the Interior Design Section.

1.4.5 Floors (See Room Finish Schedule)

The first floor shall be concrete slab on grade, unless the crawl space option is awarded, in which case the crawl space will be slab on grade. All floors above the slab on grade floor shall be concrete slabs on steel structure.

Depressed floor slabs and mortar bed method shall be used for all floors that will receive porcelain tile in accordance with the Tile Council of America (TCA) methods.

1.4.6 Floor Finishes

Porcelain tile shall be set in a cement mortar bed. Tile floors in all rooms shall be level except in the immediate areas around floor drains which shall be sloped.

All exposed concrete slabs shall be cleaned and sealed with a concrete hardener for durability and minimization of dust.

1.4.7 Ceiling Finishes

Textured gypsum board ceilings shall be provided in Stairways, Vestibules and Lobby Areas and they shall be painted.

Orange peel textured gypsum board ceilings shall be provided in Restrooms, Locker Rooms and Shower Areas and they shall be painted.

Acoustical tile ceiling panels shall be 2-foot by 2-foot on a suspended prefinished metal grid and the panels shall be at least 3/4-inch thick mineral fiber material installed at locations as indicated on the drawings. See paragraph 1.6.19.2 for additional acoustical tile ceiling requirements.

It will be acceptable for mechanical, electrical, and communication equipment rooms to have exposed structures that do not require any finished ceilings. However, exposed structural elements in these areas will require painting or a spray-applied fireproofing depending on structural design and compliance with applicable building and fire safety code requirements.

1.4.8 Ceiling Height (See Room Finish Schedule)

The Room Finish Schedule indicates the minimum allowable clearance for ceilings. The contractor can exceed these minimum as needed to allow for a more functional area.

1.5 FUNCTIONAL REQUIREMENTS

1.5.1 Equipment and Furnishings

1.5.1.1 Contractor Furnished and Contractor Installed Equipment (CFCI)

Equipment and furnishings as specified herein and as indicated on the drawings which are not indicated to be Government Furnished Contractor Installed (GFCI) or Government Furnished Government Installed (GFGI) shall be Contractor Furnished and Contractor Installed equipment and furnishings and shall include all of the below listed items but shall not be limited to the following:

Elevator
Raised Flooring System
Recessed Floor Mats
Motorized Projection Screens
Fire Extinguisher Cabinets With 10 lbs. Fire Extinguishers (Semi-Recessed)
Casework, With Drawers and Cabinets
Counters
Built-in Dishwasher
Personnel Doors And Associated Hardware (Standard, Fire Rated, And Insulated)
Mop Sink, Mop Rack And Storage Shelving In Janitor's Closet
Key Storage Cabinet
Mirrors
Toilet Accessories
Lockers
Electric Water Coolers
Wooden Benches
Built-in Display Case
Woven Wire Mesh Storage Cages
Demountable partitions

1.5.2 Occupational Safety and Health

Building design shall comply with OSHA Occupational Safety and Health Standards criteria for all items which must be included in the design to ensure safety compliance.

1.5.3 Handicapped Accessibility

The building shall comply with handicapped accessibility requirements as out lined in the American With Disabilities Act (ADA) Accessibility Guidelines for Buildings and Facilities.

1.5.4 Sound and Vibration Control

Standard materials and installation procedures shall be incorporated into the facility that reduce sound and vibration. When constructing walls, floors, ceilings, and roofs, materials shall be selected that will impede transmission of equipment vibrations and noise between rooms and within rooms. All interior walls shall extend up to the underside of structure,

or be capped above the ceiling with sound blankets installed on each side of the wall above the ceiling to limit sound transmission from one space to another. Except for the Future SCIF area all interior walls, floors and ceilings shall be constructed in accordance with STC 45 construction (at a minimum provide metal stud wall framing, sound attenuation batts and dry wall finish for the walls). See drawings for door assembly STC rating requirements. For the Future SCIF area all walls, floors and ceilings enclosing the area shall be constructed in accordance with STC 50 construction (at a minimum provide resilient furring, sound attenuation batts and dry wall finish for the walls). Exterior windows for the Future SCIF and Open Office Space 130 shall be STC 45 rated assemblise. The intent of the STC rating for the Future SCIF area and the Open Office Space 130 is to provide a physically and acoustically secure space where classified briefings and classified work efforts can take place. See Sections 01006 MECHANICAL REQUIREMENTS and 01007 ELECTRICAL REQUIREMENTS for further SCIF area construction requirements.

1.5.5 Physical Security

Conventional security measures, such as: electronic and manual door locking hardware, shall be incorporated into the facility design and development. See specific paragraphs in this section for additional security criteria.

1.5.6 Composition of Masses, Spaces and Architectural Details to Reflect the Desired Image, Scale and Nature of the Activities Involved

Features of scale such as horizontal banding, and changes in texture shall be used to tie the building together with the ground line. Materials selected shall be compatible with "commercial" construction. Building elevations shall be as indicated on the drawing and shall be similar to the existing facilities located on SAFB in the Restricted Area. Final color and material selection, shall be approved by the Base.

1.5.7 Economy of Building Construction, Operation, and Maintenance: Life-Cycle Cost Effectiveness

1.5.7.1 Economy

All materials shall be readily available within the local area, as shall sufficient trades to construct the building.

No special or unique forms of construction shall be used and skilled workers within the area shall be familiar with the proper methods required to build this facility.

1.5.7.2 Operations and Maintenance

Material selections shall be based upon reducing operation and maintenance costs. All materials shall be easy to clean and resist soiling.

1.6 TECHNICAL REQUIREMENTS
1.6.1 CONCRETE
1.6.1.1 Precast Architectural Concrete

Precast concrete panels shall be designed and fabricated by an experienced and acceptable precast concrete manufacturer certified under the PCI Plant Certification Program. The manufacturer shall have been regularly and continuously engaged in the manufacture of precast concrete work similar to that indicated on the drawings for at least 3 years. Precast work shall be

coordinated with the work of other trades.

Finishes for the precast concrete panels shall match existing Gage Brothers finishes used on the Base or an approved equal. Surfaces of precast units exposed to view or surfaces indicated to be finished shall be finished to match existing panels and as follows: Texture #1, water washed finish with flutes, Texture #2 sandblast flat-faced finish, Texture #3, water washed flat-faced finish. Finishes are to be submitted and approved through shop drawings. See Architectural drawings for locations of finishes.

1.6.2 Miscellaneous Metals

1.6.2.1 Access Doors and Panels

Access doors and panels shall be flush type. Frames for access doors shall be fabricated of not lighter than 16 gauge steel with welded joints and finished with anchorage for securing into construction. Access doors shall be a minimum of 14-inches by 20-inches and of not lighter than 14 gauge steel, with stiffened edges, complete with attachments. Access doors shall be hinged to frame and provided with a flush face and a keyed operated latch. Exposed metal surfaces shall have a shop applied prime coat. Finished paint coat shall match surrounding surfaces. Panel shall be installed in unhabitable rooms (i.e., closets) and/or non-conspicuous locations.

1.6.2.1 Louvers, Dampers, and Ductwork

Detailing and construction of louvers, motorized dampers, and ductwork shall be coordinated. Louvers shall be installed high on the wall to meet the criteria established by Force Protection Construction Standards.

1.6.2.2 Miscellaneous

Detailing and construction of louvers, motorized dampers, and ductwork shall be coordinated.

1.6.3 Vapor Barrier

A Vapor Barrier shall be provided to control the passage of moisture vapor from the interior of the facility to the exterior. The Vapor Barrier shall be installed as a continuous envelope at the interior (warm side) of exterior walls. As a minimum the Vapor Barrier membrane shall be 6 mil or heavier polyethylene sheet providing a "perm" rating of .02 or less. The installation, including treatment of seams and sealing of penetrations and tears of any kind, shall be according to the manufacturer's recommendations.

1.6.4 Bituminous Dampproofing

If any of the crawl space options are exercised then bituminous dampproofing shall be installed on below grade exterior foundation walls of the crawl spaces. The bituminous dampproofing shall extend down the outside face of the foundation wall and shall provide continuous coverage to the bottom of the foundation footing base.

Where bituminous dampproofing is installed perimeter insulation it shall have perimeter insulation placed on the exterior side of it as a protection board for the bituminous dampproofing. Perimeter insulation in contact with the bituminous dampproofing membrane system shall be a product approved for such use by the bituminous dampproofing membrane manufacturer.

Perimeter insulation shall be 2-inches minimum thickness and shall be installed and protected in accordance with Manufacturer's recommendations.

1.6.5 Roof Insulation

Roofing insulation shall be a polyisocyanurate type. A minimum aged "R" value of the roofing insulation shall be R-33, based upon a R-5.56 per 1-inch of thickness.

A single ply vapor retarder membrane shall be installed between the roofing deck and the bottom of the roofing insulation. The thickness of the vapor retarder membrane shall be in accordance with the roofing system standard thickness.

1.6.6 Roof Design

The roofing system for all roof areas of this facility shall be of the following type.

1.6.6.1 Built-Up Roofing (BUR)

Roofing for the facility shall consist of a Built-Up Roofing (BUR) system. The critical aspects of the roofing system shall be moisture penetration resistance, thermal resistance and minimal maintenance. Aggregate surface shall be installed as recommended by the roofing manufacturer so as to prevent aggregate blow off.

Roof slopes shall be a minimum of 1/2-inch per foot.

Primary roof slope shall be accomplished by sloping of the structural roof framing members to an interior roof type drainage system. Design should avoid use of "crickets" between drains.

Roof system shall provide a 20 year minimum warranty.

Roof system shall include a vapor retarder membrane.

Lightning protection shall be fully integrated and coordinated with the roofing detailing, and installation to not jeopardize in any way the roof warranty.

Roof drains shall be interior type drainage system that will be connected into the storm sewer system (and insulated to prevent condensation). Overflow drainage shall be by overflow roof drains located near each primary roof drain so that excessive ponding does not occur. Primary and overflow roof drains shall be located so that they receive sun exposure. Roof drains shall not be located near parapet walls or other roof obstructions that might inhibit their functionality due to snow or ice build-up.

1.6.7 Sheet Metalwork, General

Contractor shall include a quality assurance plan which includes a checklist of points to be observed, prior to start of roofing work.

All interior cavity thru-wall flashing shall be a metal type. An elastomeric ply sheeting is not considered to be acceptable.

Fascia shall have "V" crimps and a stable substrate as required to prevent

"oil-canning" effect.

1.6.8 Doors

a. As indicated on the drawings, exterior doors shall be heavy duty flush steel or full glass type, minimum of 16 gauge face sheets with 16 gauge pressed steel frames, shall be weather tight, and insulated to meet an R-value of 10. Steel door frames shall have a thermal break to prevent temperature transfer. Doors shall be complete door and frame assemblies with weatherstripping, door bottoms, and threshold. All exit door locations shall have exit devices with delayed alarm type exits. Window walls, door frames and glazing units for exterior door units shall meet DoD Minimum Antiterrorism Standoff Distances For Buildings requirements.

b. All exterior doors shall open on to a structural concrete landing or stoop and shall conform to NFPA #101 for landing and floor slope at the doors.

c. Main entrance doors shall be incorporated into the window wall system as indicated on the elevations.

d. Exterior and interior doors in fire rated walls shall be fire rated according to the fire rating requirements of the walls in which they occur. All fire doors shall be in accordance with the requirements of NFPA #101 and NFPA 80.

e. Interior door frames shall be 16 gauge minimum pressed steel and shall be provided with either 16 gauge heavy duty flush steel painted type doors or solid core wood doors as indicated on the drawings.

1.6.9 Hardware; Builder's (General Purpose)

1.6.9.1 Hinges

All hinges shall be grade I anti-friction bearing with a minimum of 3 hinges per door leaf. Hinges shall be fully recessed and fit flush within designated frame slots.

1.6.9.2 Locks and Latchsets

All exterior and interior door locks and latchsets shall be series 1000 mortised type. (Refer to Section 01007 ELECTRICAL REQUIREMENTS, for requirements regarding electronic door hardware, coordinate with this section.)

1.6.9.3 Lock Cylinders

Lock cylinders shall not be less than seven pins.

Cylinder shall have key removable type cores. The cylinders shall be compatible with existing base locks that were manufactured by Best. Locks and locksets shall use the Best "Premium" interchangeable figure "8" core lock system with the seven pin "WB" keyway. Disassembly of knobs, lever and locksets shall not be required to remove core from lockset. All locksets, and lockable exit devices shall accept the same interchangeable cores.

Provide a minimum of 5 spare cores, 2 blank master key sets and 10 blank keys.

1.6.9.4 Lock Trim

The doors of this facility shall comply with the handicapped accessibility requirements as out lined in the Americans With Disabilities Act (ADA) Accessibility Guidelines for Buildings and Facilities. All doors shall be provided with lever handles and all exterior doors shall have modern panic type hardware.

1.6.10 Keying

Contractor shall provide and install removable construction cores (which will be returned to the Contractor at time of final acceptance). Contractor shall coordinate with Schriever and Best for the final keyed cores for all locks and locksets which shall be keyed by Best Locks using the Schriever AFB master keying system. Final keyed cores shall be sent by Best via certified mail to the Schriever 50th CES/CEO locksmith for government installation.

1.6.11 Door Closing Devices

Surface type overhead door closures shall be Grade 1, Series CO2000 Standard Cover. Closures shall be size VI.

1.6.12 Auxiliary Hardware

Door floor stop and holder shall be Type L01371.

Lever extension flush bolts shall be type L04081 or L04251 (for fire rated doors) and they shall be installed with type L04021 dust proof strikes.

Metal thresholds shall be Type J16130 ADA approved.

All doors shall be provided with stainless steel kick plates on the push side of the door, which shall be a minimum 6-inches high and with a width that shall be 1-inch less then the doors width, less astragal if provided. Except at full glass doors in which case the kick plate height shall be 1-inch less then the bottom rail height.

All wood doors shall be provided with bevel edged stainless steel mop plates on the pull side of the door, which shall be 4-inches high and with a width that shall be 1-inch less then the doors width.

All exterior doors shall have aluminum housed type weather seals.

All exterior pairs of doors and interior vestibule pairs of doors shall be provide with full height overlapping astragals and modern type top jamb mounted door coordinators.

All sound rated doors shall have compression type seal gasketing.

1.6.13 Finishes

Door hardware finish shall match satin stainless steel Type 630.

1.6.14 Door Hardware

1.6.14.1 Hardware Requirements

Door hardware in fire rated walls shall comply with NFPA and other applicable criteria.

1.6.14.2 Hardware Sets

The following hardware sets listed are the minimum functional hardware requirements for each door type. Additional hardware may be required for each door type than listed below.

a. Exterior Steel Doors

(1) Reference door schedule for specific requirements for each door, and as a minimum provide items required in (2) and (3) below.

(2) Pairs of exterior doors used for personnel entry and exiting of the building (including the storage room door), shall have the minimum following hardware features additional hardware shall be supplied to provide for a complete installation:

Grade 1 Hinges

Exit Devices Type 24, Surface Automatic Latching Two Point Bolts, W/ Push Button Cypher Lock
Dust Proof Strikes
Overhead Closers
Full height Overlapping Astragal
Modern Style Door Coordinator
Floor stops
Weatherstripping
Kick Plates
Threshold

(3) Pairs of exterior personnel doors for the mechanical room, shall have the minimum following hardware features additional hardware shall be supplied to provide for a complete installation:

Grade 1 Hinges

Exit Devices Type 3, Function 08
Lever Extension Flush Bolts
Dust Proof Strikes
Overhead Closers
Full height Overlapping Astragal
Modern Style Door Coordinator
Floor stops
Weatherstripping
Kick Plates
Threshold

b. Interior Doors

(1) All single personnel doors used in stairs and vestibules, shall have the following hardware features:

Grade 1 Hinges

Exit Device Type 3
Overhead Closer
Kick Plate

Mop Plate (For Wood Doors)
Wall or Floor Stop

(2) All single personnel doors used in offices, conference, break, janitor's closets, storage, mechanical, electrical, comm., and mail rooms, shall have the following hardware features:

Grade 1 Hinges
Mortise Lockset (Key locking capabilities - avoid self locking hardware.)
Overhead Closer
Kick Plate
Mop Plate (For Wood Doors)
Wall or Floor Stop (Provide holder where appropriate)

(3) All single personnel doors used in toilet rooms shall have the following hardware features:

Grade 1 Hinges
Push Plate
Pull on Plate
Bored Auxiliary Dead Lock (Key operated from outside only, no interior trim)
Overhead Closer
Kick Plate
Mop Plate (For Wood Doors)
Wall or Floor Stop (Provide holder where appropriate)

(4) All pair of interior personnel doors used in vestibules and storage rooms, shall have the following hardware features:

Grade 1 Hinges

Exit Devices Type 24, Surface Automatic Latching Two Point Bolts
Dust Proof Strikes
Overhead Closers
Full height Overlapping Astragal
Modern Style Door Coordinator
Floor stops
Weatherstripping
Kick Plates
Threshold

1.6.15 Key Storage System

A recessed wall mounted key cabinet shall be provided in the 310th Space Group's Executive Officer's office, and shall contain all additional keys for all areas of the building. The cabinet shall have the capacity to store a minimum of two keys for each room on an individual key hook. Key hooks shall be mounted on panels with sufficient distance between hooks that will allow easy identification and removal. Cabinet key panels shall be readily removable and capable to insert additional panels for possible expansion needs of doubling of what is currently needed. Key cabinet shall have key locking capabilities. Cabinet door shall be a full height piano hinge.

1.6.16 Door Glazing

For door glazing requirements see paragraph 1.6.16.1.

1.6.17 Aluminum Windows

Window manufacturer shall specialize in designing and manufacturing the type of aluminum windows specified in this section, and shall have a minimum of 10 years of documented successful experience. Exposed surfaces of aluminum window frames shall be finished with anodic coating conforming to AA DAF-45: Architectural Class I, AA-M10-C22-A44, color anodic coating, 0.7 mil or thicker. Window frames and glazing units for exterior window units shall meet DoD Minimum Antiterrorism Standoff Distances For Buildings requirements.

Windows construction shall consist of an aluminum frame with a continuous thermal break. Performance rating of these windows shall be a HC 65 or greater in accordance with performance rating testing with AAMA 101. These windows shall include insulated glazing unit with solar film as specified in specification Section 08810a GLASS AND GLAZING. Window frames shall have a dark bronze anodized finish.

1.6.18 Glass and Glazing

1.6.18.1 Insulated Laminated Glass

Insulated laminated type glass units for window applications shall be a minimum of 1-inch thick and shall meet DoD Minimum Antiterrorism Standoff Distances For Buildings requirements. Glass panels shall as a minimum consist of two 1/4-inch thick glass panes separated by a 1/2-inch hermetically sealed air space. The outboard glass panel shall be Low-E glazing, Type I annealed glass, Class 1 - tinted, Quality q3 - glazing select conforming to ASTM C 1036. Tint color shall match SCF, Sungate 100 (2) Bronze by PPG. The inboard laminated glass panel shall consist of two layers of Type I transparent float glass, Class 1 - clear, Quality q3 - glazing select conforming to ASTM C 1036. The glass shall be bonded together with a 0.38 mm thick PVB inner layer under pressure, or alternatives such as resin laminates, conforming to the requirements of 16 CFR 1201 and ASTM C 1172. For the laminated glass panel the glass and PVB color shall be clear. All insulated glazing units shall be tinted with the reflective coating applied to the inner surface of the outboard glass panel. Minimum glazing unit performance shall provide a U-value/Winter Nighttime of 0.32, 30 percent visible light transmittance and 0.32 percent shading coefficient.

Insulated laminated type glass units for door applications shall be a minimum of 1-inch thick and shall meet DoD Minimum Antiterrorism Standoff Distances For Buildings requirements. Glass panels shall as a minimum consist of two 1/4-inch thick tempered glass panes separated by a 1/2-inch hermetically sealed air space. The outboard glass panel shall be Low-E tempered glazing, Type I float glass, Class 1 - tinted, Quality q3 - glazing select conforming to ASTM C 1036. Tint color shall match SCF, Sungate 100 (2) Bronze by PPG. The inboard laminated glass panel shall consist of two layers of tempered glazing, Type I transparent float glass, Class 1 - clear, Quality q3 - glazing select conforming to ASTM C 1036. The glass shall be bonded together with a 0.38 mm thick PVB inner layer under pressure, or alternatives such as resin laminates, conforming to the requirements of 16 CFR 1201 and ASTM C 1172. For the laminated glass panel the glass and PVB color shall be clear. All insulated glazing units shall be tinted with the reflective coating applied to the inner surface of the outboard glass panel. Minimum glazing unit performance shall provide a U-value/Winter Nighttime of 0.32, 30 percent visible light transmittance and 0.32 percent shading coefficient.

1.6.18.2 Glass Mirrors

All glass mirrors shall be Type I transparent flat type, Class 1-clear, 1/4-inch thickness.

1.6.19 Gypsum Wallboard

Manufacturer shall have specialized in the manufacturing of these material products for a minimum of 10 years of documented experience.

Installer shall have a minimum of 5 years of documented experience.

All gypsum wallboard shall be a minimum of 5/8-inch thick.

All metal studs shall be placed at a maximum distance 16-inches on-center.

Predecorated gypsum board is not considered acceptable.

Exterior gypsum soffit board is not considered acceptable. Exterior soffits shall be white factory finished metal type as specified in specification Section 07416 STRUCTURAL STANDING SEAM METAL ROOF (SSSMR)

Water-resistant gypsum backing board used as a substrate to receive wall tile is not considered an acceptable wall tile substrate. Cementitious backer board, masonry or concrete shall be utilized as a wall tile substrate.

1.6.20 Tile

Floor tile in toilets shall be installed in accordance with Tile Council of America (TCA) method F121.

Wall tile in toilets shall be installed in accordance with Tile Council of America (TCA) method W244.

1.6.21 Ceilings

1.6.21.1 Gypsum Board Ceiling

See paragraph 1.4.7 for allowed gypsum board ceiling finishes.

1.6.21.2 Acoustical Tile Ceiling

Acoustical ceiling system shall be a 2' X 2' exposed grid type. Acoustical panels shall have a square edge. Characteristics of the acoustical panels shall consist of: textured surface, high density material to resist impact damage, non perforated tile with a textured finish.

1.6.22 Painting, General

1.6.22.1 Surfaces to Receive Paint

A semi-gloss enamel painted finish system shall be provided on all exposed gypsum board, masonry and concrete wall surfaces, except for Janitor Closet walls, which shall receive a high-gloss enamel painted finish system.

All gypsum board ceilings shall receive a flat latex paint finish.

Exposed masonry walls to be painted shall receive a latex filler coat prior to paint application.

Steel roof deck, structural elements, shall receive a semi-gloss paint finish.

1.6.22.2 Surfaces Not to be Painted

Surfaces in the following areas are not to be painted:

Concrete or concrete masonry units in unexposed areas.

Concrete floors - except where noted.

Metal surfaces of aluminum, stainless steel, chromium plate, bronze, copper and similar finish materials.

Jacketing over pipe insulation in unexposed locations that do not require color coding.

Surfaces of hardware, fittings, sprinkler heads, fire protection equipment and other factory finished items not requiring a painted finish.

Glass, wall covering and other finish surfaces.

1.6.23 Raised Floor System

A grounded 1'-0" raised flooring system shall be installed flush with other adjacent finished floor elevation at locations as indicated on the Room Finish Schedule. The floor system shall be of the stringer type, complete with all supplemental items, and shall be the standard product of a manufacturer specializing in the manufacture of raised floor systems.

Floor panels and flooring system shall be capable of supporting a 1,500 pound concentrated load without deflecting more than 0.080-inch and without permanent deformation in excess of 0.010-inch in any of the specified tests. Floor panels shall be capable of supporting 350 pounds per square foot uniform live load without deflection more than 0.040-inch. Floor panels shall be capable of supporting 600 pounds rolling load without deflecting more than 0.040-inch and without permanent deformation in excess of 0.020-inch. In accordance with CISCA Access Floors, the permanent deformation limit under rolling load shall be satisfied in all of the specified tests. In the specified tests, the permanent deformation shall be measured after 10 passes with Wheel 1 and after 10,000 passes with Wheel 2.

In addition to this the floor panels and flooring system in rooms or areas as identified on the plans as Storage Rooms, Corridors or Pathways, are required to meet the 1,500 lbs. concentrated loading criteria plus a 400 pounds per square foot uniform live loading without deflecting more than 0.040-inch. The floor panels and flooring system in these areas shall also be capable of supporting a 1,200 lbs. rolling load without deflecting more than 0.040-inch and without permanent deformation in excess of 0.020-inchs. In accordance with CISCA Access Floors, the permanent deformation limit under rolling load shall be satisfied in all of the specified tests. In the specified tests, the permanent deformation shall be measured after 10 passes with Wheel 1 and after 10,000 passes with Wheel 2.

For raised floor areas identified as "LOCATION OF GFCI FLOOR SAFE" the floor panels and flooring system shall be required to meet a 2,000 lbs. concentrated without deflecting more than 0.080-inch and without permanent

deformation in excess of 0.010-inch in any of the specified tests. Floor panels and the flooring system in these areas shall be capable of supporting a 500 pounds per square foot uniform live loading without deflecting more than 0.040-inch. The floor panels and flooring system in these areas shall also be capable of supporting a 1,700 lbs. rolling load without deflecting more than 0.040-inch and without permanent deformation in excess of 0.020-inchs. In accordance with CISCA Access Floors, the permanent deformation limit under rolling load shall be satisfied in all of the specified tests. In the specified tests, the permanent deformation shall be measured after 10 passes with Wheel 1 and after 10,000 passes with Wheel 2.

1.6.24 HYDRAULIC ELEVATOR

A hydraulic elevator shall run from the crawl space (crawl space option) or ground floor (no crawl space option) to the second floor. The elevator shall have 2 (no crawl space option) or 3 (crawl space option) stops. The elevator shall be designed and installed in accordance with ASME A17.1 - Safety Code for Elevators and Escalators, and meet ADA requirements. A dedicated machine room sized to accommodate elevator equipment shall be provided and located adjacent to the elevator hoistway on the lowest level served by the elevator. Basic requirements and finishes for the elevator shall be as follows:

Rated Load: 3500 pounds minimum.

Rated Speed: 125 feet per minute.

Travel Length: 15 feet from first floor finished elevation to second floor finished elevation or 30 feet from optional crawl space floor finished elevation to second floor finished elevation. Contractor shall field verify travel length.

Number of Stops: 2 or 3 depending on award of crawl space option.

Number of Hoistway Openings: 2 or 3 depending on award of crawl space option.

Car Inside Dimensions: Maximum possible with given hoistway dimensions. 6'-0" X 8'-0" minimum clear inside car dimensions.

Car Opening: 3 ft. 6 in. minimum.

Car Door Type: Single-speed side slide or single speed center opening.

Floor finish shall be raised rubber tile in accordance with the drawings.

Interior face of car door shall be brushed stainless steel.

Walls: Walls shall be Formica #4786 Black Micro Perf with brushed stainless steel trim and handrails.

Hoistway frame and exterior surface of door shall be brushed stainless steel.

Car ceiling shall be eggcrate with brushed stainless steel frame.

1.6.25 Exterior Signage

Building number Signage shall be cast aluminum satin finished material in a helvetica medium style, located as directed (4 sets located 5-ft above grade on both faces of the northwest and Southwest building corners).

Building number signage shall be eight inches tall. The building number will be a 3 or 4 diget number. Contractor shall coordinate actual building number with the contracting officer.

1.6.26 Toilet Accessories

1.6.26.1 Accessory Types

Janitor closets shall have a 18 gauge stainless steel, satin finish shelf integral 4 mop holder and 5 hook brackets shall be supplied.

Electric Hand Dryer (EHD) shall be a semi recessed mounted dryer. Features of the dryer shall include a: 360 degree rotating nozzle, minimum 1/10 hp motor, push button motor switch. Dryer casing, nozzle and push button shall have a chrome plate steel finish.

Toilet partitions shall consist of polymer resins or solid surface type materials. Toilet partitions shall be floor mounted with overhead bracing.

Paper Towel Dispenser / Waste Receptacle (PTDWR)shall be a recessed unit suppling multi-fold paper towels. The cabinet shall have a concealed tumbler key lock. Unit shall have a 2 cu.foot minimum removable molded plastic insert.

Soap Dispenser (SD) shall be the liquid pump type with a minimum 34 fluid ounce capacity. Dispenser shall be mounted on the lavatory fixture.

Mirror Glass(MG) mirrors shall be a minimum of 16-inches wide by 24-inches high and shall be installed over the lavatory as indicated on the drawings.

Toilet Tissue Dispenser (TTD) shall be a double roll dispenser with a recessed holder.

Sanitary Napkin Dispenser (SND) shall be wall mounted and mounted where indicated on the drawings.

Grab Bars (GB) Shall be 1-1/4-inch in diameter, 304 stainless steel, concealed mounting, and non slip finish.

Toilet Seat Cover Dispenser (TSCD) shall be Type 304 stainless steel and shall be recessed mounted with a minimum capacity of 500 seat covers.

Shower Curtain Rod (SCR) shall be Type 304 stainless steel, 1-1/4-inch OD, 18 gauge, and of a length as required to meet the installation conditions. Shower curtain rod shall be surface mounted. Shower curtains shall be provided by others.

1.6.26.2 Toilet Accessory Finishes

Finishes shall match stainless steel, Type 304.

1.6.27 Fire Extinguisher Cabinets

Fire extinguisher cabinets shall be semi-recessed type with a flat metal door. Clear plastic bubble type door front is acceptable. Fire extinguisher cabinets shall be located in accordance with NFPA Life Safety Code #101.

1.6.28 Janitor's Closet Accessories

Each janitor's closet shall have a broom/mop rack, storage shelving, and mop sink.

1.6.29 Cabinets and Counter Tops

All cabinet and counter tops shall meet the requirements of the National Cabinet Association. Base cabinets, wall cabinets and counter tops shall be provided as indicated on the drawing floor plans, in Break Rooms and Toilet Rooms. In each Break Room the wall cabinets shall be constructed so that they have a shelf which will accomadate 2 standard size microwaves, side by side. Shelf space shall be complete with GFI outlets for each microwave. Cabinets shall be factory-manufactured products of a modular cabinet supplier or custom-built. Wall and base cabinets shall be of the same construction and appearance. Wall and base cabinets shall be constructed with frame fronts and solid ends, or frame construction throughout. Cabinets shall be constructed per AWI Standards for custom grade joinery utilizing European assembly screws, dowels or stop dados, which are glued together. Brace the top and bottom corners with hardwood blocks that are glued with water-resistant glue and nailed in place. Cabinet materials, dimensions and thickness for cabinet construction shall comply with the below requirements.

Wall and base cabinets, shall have adjustable shelves. Cabinets shall have spring-loaded self-closing, Invisible mounted, European style hinges with 110-degree minimum opening. Pulls shall be as specified herein. Cabinets and countertops shall have a flame-spread rating that does not exceed 200 when tested in accordance with ASTM E84 and ASTM E162, Test Method for Surface Flammability of Materials Using a Radiant Heat Energy Source.

All cabinets and counter tops shall be designed and constructed in accordance with FED-STD-795 for handicapped accessibility.

1.6.29.1 Counter Tops and Backsplashes

Counter tops and backsplashes, shall be a minimum 3/4-inch solid surface material (Corian or approved equal). Minimum backsplash height is 4-inches. Backsplashes shall be provided at both back of counters and at side of counters where abutting a wall. Solid surface counter tops and backsplashes shall be scribed to fit with joints glued and sealed. The substrate for countertops shall be as recommended by the manufacturer. Counter tops in break rooms shall accommodate stainless steel sinks with exposed lip mounting. Counter tops in toilet rooms shall be provided with integral solid surface sinks.

1.6.29.2 Cabinet Specifications

Frame Members - Per AWI and a minimum 3/4-inch thick by 1-1/2-inch wide kiln-dried solid hardwood.

Base Cabinet Toe Space - 2-1/2-inches deep x 4-inches high with 3/4-inch hardwood.

Cabinet Bottoms, Backs Ends, & Tops - Cabinet ends shall be 5/8-inch medium density overlaid plywood with plastic laminate where exposed. Backs of wall cabinets shall be 1/4-inch plywood. Backs of base cabinets shall be 3/8-inch minimum plywood. Provide 3/8-inch thick plywood bottoms in cabinets. Brace bottoms with wood members glued in place.

Doors - Door design shall be flush 3/4-inch thick minimum faced and self-edged with plastic laminate. Exposed exterior trim shall be hardwood.

Drawer Slides/Guides - Drawer slides/guides shall be slide guides with an automatic stop feature, 100-pound/pair load capacity, side and bottom mounting, white color epoxy-coated cold rolled steel. Lift-out disconnect "stay closed design". Top mounted center drawer guides will not be acceptable.

Drawers - Drawer face design shall be 3/4-inch thick minimum faced and self-edged with plastic laminate. Exposed exterior trim shall be hardwood. Using dowel or French dovetail joints to fasten side to back and front. All joints glued. All drawers and pull out shelves shall be mounted with side and bottom mounted slides. Drawer sides shall be 1/2-inch minimum solid hardwood. Bottoms to be 1/2-inch minimum solid hardwood or plywood attached to the bottom of sides, fronts and backs using glue and mechanical fasteners.

Screws - Per AWI custom techniques.

Bumper Pads - Rubber.

Shelves - All shelves shall be fully adjustable, 3/4-inch minimum thick medium density custom grade particle board or custom grade plywood coated with 3-mil industrial paper with double smoothing melamine topcoat on both sides. Which shall be supported on steel support flush mounted angles with 1/4-inch diameter by 3/8-inch long dowel pins, adjustable at 1-1/4-inches on center. Shelf edges exposed to view shall be hardwood, rounded, filled, sanded, and finished.

1.6.29.3 Cabinet Hardware Finishes

Door pulls and drawer handels shall be wire style high gloss black finish. Hinges shall match satin stainless steel, Type 630 finish.

1.6.30 Built-in Display Case

A lighted Built-in Display Case shall be provided at the location as indicated on the drawings. The Display Case shall be of the length and width as indicated on the drawings and shall be either a full height, free standing floor to ceiling type or a recessed wall mounted type, which would have a 3'-4" sill and a 9'-0" head height. The Display Case design and constructed shall be in accordance with the requirements of the National Cabinet Association. The Display Case shall be custom-built of Premium Grade I book matched solid hardwood or Premium Grade A-A book matched hardwood veneer plywood, 3/4-inch minimum thickness. The Display Case shall be of a simple design and shall be detailed and finished to match other adjacent woodwork items. The Display Case shall have a fully operable and lockable glass front that uses either a sliding glass panel and track system or a wood framed concealed hinged door system. The Display Case shall be provided with 4 sets (approximately 88 lineal feet of shelving) of 16-inch minimum deep fully adjustable glass shelves, which as a minimum are adjustable at increments of

4-inch O.C. Shelving runs shall be a maximum of 8-feet and a minimum of 4-feet in length. If intermendiate panel supports are provided then the longest shelving run shall be centered in the Display Case and the other shelving runs shall be equal in length and balanced on each side of it. Shelving and supports shall be designed to support a total uniform load of 45 pounds per 4-foot length without deflecting more then 1/4-inch. Glazing utilized in the Display Case shall as a minimum be clear 1/4-inch tempered safety glass.

1.6.31 Benches

Benches shall be provided at locations as indicated on the drawings. Benches shall be of a simple to match design other woodwork and cabinetry items provided under this contract. Seating surface shall be constructed of 2-inch thick clear premium grade hardwood. Corners and edges shall have rounded nosings. Bench height shall be 18-inches and the bench shall be anchored to the wall or floor with metal supports as appropriate for the condition, minimum 2 supports per bench. Benches shall be designed and constructed to support a load of 500 pounds per lineal foot vertical load, without coming loose from the fasteneings and without obvious permanent deformation. Finish shall be stain and varnish, color as indicated in the Interior Design Section.

1.6.32 Lockers

Galvinized factory finished metal lockers shall be provided in the toilet rooms at locations as indicated on the drawings. Finish shall be an epoxy-based primer with topcoating. lockers shall be 2 tier with every 4th locker being full height. Single tier lockers shall be a minimum 12-inches wide by 12-inches deep by 72-inches high. Locker shall be provided with legs and a minimum 4-inch high continuos toe plate. Lockers shall be provided with a full height piano hinge, a padlock eye in the door latching mechanism and handel, hanger rod, minimum 3 coat hooks, and number plates. In the full height lockers a shellf shall be provided.

1.6.33 Recessed Floor Mat And Frame

Rectangular recessed floor mats and extruded aluminum cast in place metal frames shall be provided in all entry vestibules. A floor drain shall be provided under each recessed floor mat. Floor mat and frame shall be centered in the vestibule width and shall start 6-inches in from the exterior door thershold. Recessed floor mat width shall be 6-inches less then the width of the vestibule from wall to wall. For Vestibule 100 the mat width shall be 6'-0". Lenght of mat (in the direction of travel) shall be 7'-0". Floor mat shall be similar and equal to G3-B-V(Black)-LB as manufatured by C/S Entrance Flooring System.

1.6.34 Woven Wire Mesh Storage Cages

Woven wire storage cages shall be provided as indicated on the drawings. The cages shall extend from floor to 1'-0" below the ceiling and shall be provided with a woven wire mesh top. In addition to the cages floor mounting supports at abutting gypsum board walls the cages shall also be anchored to the wall. Woven Wire Mesh Storage Cages shall be the standard product of a manufacturer. Cages shall be constructed of metal fabric attached to structural steel framing members. Fabric shall be woven wire metal of 38 mm (1-1/2 inch), No. 8, diamond mesh clinched to framing. Framing members shall be channels 38 by 19 by 3 mm (1-1/2 by 3/4 by 1/8 inch) minimum size. Channel framing shall be mortised and tenoned at

intersections. Steel supports, posts, and intermediate members shall be of the sizes and shapes indicated. Cast-iron floor shoes and caps shall have set screw adjustment. 2'-6" minimum width Doors and wall panels shall be provided as indicated, complete with hardware and accessories including swivel hasp, door stop, guard plates, and fixed pin butts or fixed pin piano hinges. Lock hasp shall be minimum 12 gage formed metal for use with a padlock. Storage cage doors shall be provided with manufacturer's standard aluminum or stainless steel number plate, numbering each unit consecutively. Except as otherwise specified, metal-framed partitions and mesh shall conform to the WWPA Woven Wire: Protection and Security manual. Metal surfaces of bulk storage units shall be factory finished, color shall be as indicated in Section 01004 Interior Design Requirements.

1.6.35 Demountable Partitions

Demountable Partitions shall be manufacturer's standard similar to Portal Products and Pathway Architectural Wall System as manufactured by Steelcase. Demountable Partitions shall be provided as indicated on the drawings and shall consist of a series of individual, floor-supported, floor-to-ceiling pre-fabricated. Top channel shall hold panels in place and shall accommodate a floor-to-ceiling variation. Doors shall be pocket sliding type to maximize office space. Demountable partition system shall provide accommodations for electrical switches and outlets. Building electrical power shall be end mount base feed and shall be in accordance with Section 01007 Electrical Requirements.

Panel shall be minimum 0.0224 inch thick welded, roll-formed, galvanized steel frame containing 2-3/4 inch thick panels made with a mineral wool core between two 1/2 inch gypsum sheets covered with a neutral vinyl wallcovering on interior walls and exterior walls shall have a wood veneer with frosted windows along the top row from the ceiling, also beside each pocket door. Panels shall be complete with accessories and panel connectors at joints to align panels. Demountable Partition system shall meet all applicable codes, fire-ratings and acoustical performance requirements.

1.6.36 Motorized Projection Screen

Motorized Projection Screens shall be provided at the locations as indicated on the drawings. The Motorized Projection Screen shall be an electric heavyduty fully automatic ceiling closure concealed recessed installed type. The screen shall be controled from a wall switched outlet located adjacent to the projection system wall junction box. The screen operation shall be quiet and when not in use it shall retract and be concealed behind an automatic closure panel, which is flush and finished to match the ceiling in color. The screen shall be seamless, white glass beaded type on a black fabric. For conference rooms 132 and 218 the screen size shall be 7'-0" wide by 9'-0" high with a maximum 2-inch black border. For conference room 205 the screen size shall be 8'-0" wide by 10'-0" high with a maximum 2-inch black border. In addition to the Motorized Projection Screen installation each conference room shall also be layed out and preped for installation of a GFGI concealed recessed ceiling mounted projection system. The projection system prep shall include junction boxes and conduit runs for electrical, Audio Visual and lan. The projector will be located so that it is centered on the screen and two thirds of the length of the room back away from the screen.

1.7 ROOM DESCRIPTIONS

(Rooms not described in the following are considered to be of normal use

not requiring further description, such as restrooms, general office space, etc.)

Future SCIF Areas. The walls, floors and ceilings enclosing the future SCIF area as indicated on the drawings shall be designed and constructed as required by the Manual for Physical Security for Sensitive Compartmented Information Facilities (SCIF). So that top secret briefings and work on top secret or classified information can take place in the space.

1.8 Guide Specifications

The following is a listing of the Architectural guide specifications that it is anticipated will be needed in the design and construction of this facility. As noted in paragraph 1.2.1, the provided guide specifications define the minimum requirements and level of quality for items of equipment, materials, installation, and testing that shall be provided for the facility. Where items of equipment, materials, installation, or testing requirements are not covered in the provided specifications; special sections or within each guide specification or new specifications sections shall be prepared to cover those subjects.

03413A PRECAST ARCHITECTURAL CONCRETE
04200 MASONRY
05500A MISCELLANEOUS METAL
06100A ROUGH CARPENTRY
06200A FINISH CARPENTRY
06650 SOLID POLYMER (SOLID SURFACING) FABRICATION
07110A BITUMINOUS DAMPPROOFING
07220 ROOF AND DECK INSULATION
07511 BUILT-UP ASPHALT ROOFING
07600 FLASHING AND SHEET METAL
07810 SPRAY-APPLIED FIREPROOFING
07840A FIRESTOPPING
07900A JOINT SEALING
08110 STEEL DOORS AND FRAMES
08210 WOOD DOORS
08520A ALUMINUM AND ENVIROMENTAL CONTROL ALUMINUM WINDOWS
08710 DOOR HARDWARE
08810A GLASS AND GLAZING
08900 GLAZED CURTAIN WALL
09100N METAL SUPPORT ASSEMBLIES
09250 GYPSUM WALLBOARD
09310 CERAMIC TILE, QUARRY TILE, AND PAVER TILE
09510 ACOUSTICAL CEILINGS
09650 RESILIENT FLOORING
09680A CARPET
09685N CARPET TILE
09720 WALLCOVERINGS
09900 PAINTINGS AND COATINGS
09915 COLOR SCHEDULE
10153 TOILET PARTITIONS
10260 WALL AND CORNER GUARDS
10270A RAISED FLOOR SYSTEM
10430 EXTERIOR SIGNAGE
10440 INTERIOR SIGNAGE
10501 WIRE MESH STORAGE CAGES
10505N STEEL CLOTHING LOCKERS
10522 FIRE EXTINGUISHER CABINETS
10550 POSTAL SPECIALTIES

10615A DEMOUNTABLE PARTITIONS
10800 TOILET ACCESSORIES
11025 FORCED ENTRY RESISTANT COMPONENTS
12320A CABINETS AND COUNTERTOPS
12490A WINDOW TREATMENT
12675 RECESSED FLOOR MAT AND FRAME
14240 HYDRALIC ELEVATORS

PART 2 NOT USED

PART 3 NOT USED

-- End of Section --

SECTION TABLE OF CONTENTS

DIVISION 01 - GENERAL REQUIREMENTS

SECTION 01004

INTERIOR DESIGN REQUIREMENTS

PART 1 INTERIOR DESIGN REQUIREMENTS

1.1 REFERENCES
1.2 DESIGN CRITERIA
1.3 INTERIOR FINISHES
1.3.1 Carpet Broadloom
1.3.1.1 Pile Type
1.3.1.2 Static Control
1.3.1.3 Flammability and Critical Radiant Flux Requirements
1.3.1.4 Tuft Bind
1.3.1.5 Broadloom Installation
1.3.2 Carpet Tile
1.3.2.1 Pile Type
1.3.2.2 Static Control
1.3.2.3 Flammability and Critical Radiant Flux Requirements
1.3.2.4 Tuft Bind
1.3.2.5 Installation Carpet Tile
1.3.2.6 Carpet Tile
1.3.3 Vinyl Composition Tile
1.3.4 Rubber Flooring and Stair Treads
1.3.5 Porcelain Tile
1.3.6 Interior Signage
1.3.7 Horizontal Blinds
1.3.8 Vinyl Wallcovering
1.3.9 Acoustical Wallcovering
1.3.10 Resilient Base
1.3.11 Installation of Finishes
1.4 COLOR, TEXTURE, AND PATTERN
1.4.1 Interior Finishes
1.4.2 Exterior Finishes
1.5 FURNITURE
1.6 Furniture Layout(Furniture is not in contract) and provided for reference only.

PART 2 NOT USED

PART 3 NOT USED

-- End of Section Table of Contents --

SECTION 01004

INTERIOR DESIGN REQUIREMENTS

PART 1 INTERIOR DESIGN REQUIREMENTS

1.1 REFERENCES

The publications listed below shall be utilized for design of this facility to the extent referenced. The publications shall comply with the latest edition of the UFGS guide specification (Copy included on CD-ROM).

AMERICAN ASSOCIATION OF TEXTILE CHEMISTS AND COLORISTS (AATCC)

AATCC TM 134	Test Method: Electrostatic Propensity of Carpets

CODE OF FEDERAL REGULATIONS (CFR)

36 CFR 1191	Americans with Disabilities Act (ADA) Accessibility Guidelines for Buildings and Facilities

AMERICAN SOCIETY FOR TESTING AND MATERIALS (ASTM)

ASTM D 1335	Tuft Bind of Pile Floor Coverings Room Method
ASTM E 84	Surface Burning Characteristics of Building Materials
ASTM E 648	Critical Radiant Flux of Floor-Covering Systems Using a Radiant Heat Energy Source
ASTM F 793	Standard Classification of Wallcovering by Durability Characteristics
ASTM F 1066	Vinyl Composition Floor Tile
ASTM F 1344	Rubber Floor Tile

AMERICAN NATIONAL STANDARDS INSTITUTE (ANSI)

ANSI A137.1	Ceramic Tile

CODE OF FEDERAL REGULATIONS (CFR)

16 CFR 1630	Standard for the Surface Flammability of Carpet and Rugs

DEPARTMENT OF AIR FORCE (AF)

AFPAM 32-1097	Air Force Sign Standards Pamphlet

FEDERAL SPECIFICATIONS (FS)

FS AA-V-00200	Venetian Blinds

U.S. GENERAL SERVICES ADMINISTRATION (GSA)

FED-STD 795	(Basic) Uniform Federal Accessibility Standards

NATIONAL FIRE PROTECTION ASSOCIATION (NFPA)Org

NFPA 101	Life Safety Code
NFPA 265	Standard Methods of Fire Tests for Evaluating Room Fire Growth Contribution of Textilw Wall CoveringsRef Title

UNIFORM BUILDING CODE (UBC)

UBC 8-2	Standard Test Method for Evaluating Room Fire Growth Contribution of Textile Wallcovering
UBC 42-2	Standard Test Method for Evaluating Room Fire Growth Contribution of Textile Wall Covering

1.2 DESIGN CRITERIA

The design of this building shall be in accordance with this document.

1.3 INTERIOR FINISHES

1.3.1 Carpet Broadloom

Bently or equal is recommended. Carpet shall be Tufted Tip-Sheared, fiber Solutia Ultron VIP of Nylon Piece Dyed. Provide larger scale patterns in larger areas as per paragraph 1.4.1. Carpet shall meet the following minimum requirements:

1.3.1.1 Pile Type

Pile type shall be loop with a minimum 5/64 gauge, minimum yarn weight of 32 ounces per square yard, and minimum pile density of 8,900.

1.3.1.2 Static Control

Static electricity build-up of the carpet shall be permanently less than 3.5 kilovolts at 70 degrees F and 20 percent relative humidity as determined by the American Association of Textile Chemists and Colorists (AATCC TM 134 Test Method), Electrostatic Propensity of Carpets.

1.3.1.3 Flammability and Critical Radiant Flux Requirements

Carpet shall comply with 16 CFR 1630 and have a minimum average critical radiant flux of .45 watts per square centimeter when tested in accordance with ASTM E 648.

1.3.1.4 Tuft Bind

Tuft bind force required to pull a tuft or loop free from carpet backing shall be a minimum 10 pound average force for loop pile when tested in accordance with ASTM D 1335. A ten year warranty from the carpet manufacturer against edge ravel, delamination and tuft bind is required.

1.3.1.5 Broadloom Installation

Carpet shall be installed direct glue down. Adhesives and concrete primers shall be waterproof, nonflammable, meet local air-quality standards, and be as recommended by the carpet manufacturer.

1.3.2 Carpet Tile

Carpet tile shall be Tufted Tip-Sheared, Multiloop-Giotto 3D, Ultron Color of Nylon 6,6 by Solutia. Provide larger scale patterns in larger areas as per paragraph 1.4.1. Carpet shall meet the following minimum requirements:

1.3.2.1 Pile Type

Pile type shall be loop with a minimum 5/64 gauge, minimum yarn weight of 32 ounces per square yard, and minimum pile density of 18lb/ft3.

1.3.2.2 Static Control

Static electricity build-up of the carpet shall be permanently less than 3.5 kilovolts at 70 degrees F and 20 percent relative humidity as determined by the American Association of Textile Chemists and Colorists (AATCC TM 134 Test Method), Electrostatic Propensity of Carpets.

1.3.2.3 Flammability and Critical Radiant Flux Requirements

Carpet shall comply with 16 CFR 1630 and have a minimum average critical radiant flux of .45 watts per square centimeter when tested in accordance with ASTM E 648.

1.3.2.4 Tuft Bind

Tuft bind force required to pull a tuft or loop free from carpet backing shall be a minimum 10 pound average force for loop pile when tested in accordance with ASTM D 1335. A ten year warranty from the carpet manufacturer against edge ravel, delamination and tuft bind is required.

1.3.2.5 Installation Carpet Tile

Carpet shall be installed direct glue down. Adhesives and concrete primers shall be waterproof, nonflammable, meet local air-quality standards, and be as recommended by the carpet manufacturer.

1.3.2.6 Carpet Tile

Carpet tiles shall be randomly placed on the raised floor panels, and as recommended by the carpet manufacturer.

1.3.3 Vinyl Composition Tile

Vinyl composition tile shall conform to ASTM F 1066, Class 2 (through pattern tile), Composition 1, asbestos-free tile shall have the color and

pattern uniformly distributed throughout the thickness of the tile.

1.3.4 Rubber Flooring and Stair Treads

Rubber Flooring and Stair Treads shall conform to ASTM F 1344 Class 1 homogeneous construction, Type A. Surface shall be hammered with overall thickness .125" (3.175mm). Stair tread, risers and stringers shall conform to composition rubber compound from a mixture of synthetic and reclaimed rubber. Overall thickness at treads shall not be less than 1/8 inch (3mm). Design shall be one nosing/tread/riser or a two piece nosing/tread with a matching coved riser. Installation shall include stringer angles on both the wall and banister sides and landing trim.

1.3.5 Porcelain Tile

Porcelain tile shall conform to ANSI A137.1, moderate to heavy grade only. Porcelain tile and trim shall be unglazed with the color extending uniformly through the body of the tile. Porcelain tile shall be equal to Crossville Ceramics. (Refer to paragragh 1.4.1. for pattern location.) Provide porcelain wall tile patterns with colors referenced in paragraph 1.4.1. Patterns shall be appropriate to size and shape of rooms. Light colors shall be used for background colors, and dark colors shall be used as accents. Provide recessed floor mats at all building entrances.

1.3.6 Interior Signage

Interior signage shall be included and must be coordinated with the user. Signage must conform to 36 CFR 1191 Americans with Disabilities Act (ADA) and FED-STD 795 Uniform Federal Accessibility Standards (UFAS), whichever is most stringent, and Air Force Sign Standards Pamphlet (http://afpubs.hq.af.mil). Include directional signage for wayfinding. Provide signage for all rooms unless otherwise directed by Contracting Officer. Coordinate signage requirements and placement with user and Contracting Officer.

1.3.7 Horizontal Blinds

Horizontal blinds shall be provided on exterior windows and interior windows unless otherwise noted. Blinds shall be in accordance with FS AA-V-00200, Rev. B., Type II. Slats shall be aluminum and not less than .0070 thick.

1.3.8 Vinyl Wallcovering

Vinyl wallcovering shall be Type II, and have a class A flame spread rating of 0-25 and smoke development rating of 0-50 when tested in accordance with ASTM E 84. Provide wallcovering that is aesthetically pleasing and has enough visual texture for ease of maintenance. Clear corner guards shall be provided for all exposed corners.

1.3.9 Acoustical Wallcovering

Fabric shall be polyester, polyolefin blend. In addition, the component product, including fabric, adhesives and installation shall comply with UBC 42-2, UBC 8-2, of NFPA 265. Corner guards shall be provided for all exposed corners.

1.3.10 Resilient Base

Resilient base shall conform to FS SS-W-40, Type I rubber. Style A, (straight)-installed with carpet. Style B (coved)-installed with resilient flooring. Base shall be 4 inches high and a minimum 1/8 thick. Job formed corners shall be furnished.

1.3.11 Installation of Finishes

All finishes shall be installed as per manufacturer's recommendations.

1.4 COLOR, TEXTURE, AND PATTERN

The color, texture, and pattern selections for the finishes of the buildings shall provide an aesthetically pleasing, comfortable, easily maintainable and functional environment for the occupants. Coordination of building colors and finishes is necessary for a cohesive design. Color of porcelain tile grout shall be a medium range color to help hide soiling. Plastic laminate shall have patterns that are mottled, flecked or speckled with a mar-resistant finish, such as Formica's "Crystal" finish. . All newly selected finishes must coordinate with specified selections.

1.4.1 Interior Finishes

Interior finishes shall be equal in appearance and quality to the following:

Carpet Tile: **CT-1 (First Floor) Bentley Carpets, Lowell 8LO3206300 - Nesmith 885931.**
CT-2 (Second Floor) Bentley Carpets, Charles River 8CA3206300 Nesmith 885931.
CT-3 (Conference Rooms) Bentley Carpets, Mill City 8MB3206300 Nesmith 885931.

Carpet Broadloom : **C-4 (Second Floor Lobby) Bentley Carpets, Lowell 8LO3206300 -Nesmith 885931.**

Carpet Border 12" Inset (Conference Rooms): CB-1 Bentley, New Stratford, NS34B*528 Brushed Gold.

Porcelain Tile 12" x 12" (Lobby Accent): Crossville Ceramics, Verde VS104.

Porcelain Tile 12" x 12" (Lobby Field): Crossville Ceramics, Nero VS105.

Porcelain Tile (Restroom Wall Field): Crossville Ceramics, Empress Silver US87 (provide pattern).

Porcelain Tile (Restroom Walls Accent) Crossville Ceramics, Nero VS105 (provide pattern)

Porcelain Tile (Restroom Floor Accent) Crossville Ceramics, Nero VS105 (provide pattern).

Porcelain Tile 12" x 12"(Restroom Floor Field) Crossville Ceramics, Empress Silver US87 (provide pattern).

Linoleum Flooring (Breakroom Field): Forbo Marmoleum, 3866 Fresco Eternity

(provide pattern).

Linoleum Flooring (Breakroom Accent): Forbo Marmoleum, 3860 Fresco Silver Shadow (provide pattern).

Solid Surfacing (Countertops Breakroom): Corian, Fossil.

Plastic Laminate Cabinets Breakroom): Wilsonart, Mesa Flint 4576-07.

Solid Surfacing (Countertops Restrooms): Corian, Macadam.
Raised Rubber Tile: Johnsonite, Roundel Artisan Collection 725 Meteor.

Resilient Floor Base: VPI, 94 Black Brown.

Paint (Walls): Benjamin Moore Paints, Color #858.

Paint (Door Frames): Benjamin Moore Paints, Color #1596.

Vinyl Wallcovering (Lobby 2nd floor): Koroseal Wallcovering, Arbor Empress A521-49.

Vinyl Wallcovering (Lobby 1st Floor): Koroseal Wallcovering, Times Square Greenwich Q221-36.

Vinyl Wallcovering (Breakroom 123): Vicrtex, Veneziano Canale VN21-84.

Vinyl Wallcovering (Conference Room 218):

Conference Room 205: Chair Rail Molding: Wood Stain Shall Match Wilsonart, 7054-60 Wild Cherry.
Above Chair Rail: Coral of Chicago, Cork Storm.
Below Chair Rail: Koroseal Wallcovering, Arbor Empress A521-49.

Elevator (Cab Wall): Formica, Black Micro Perf 4786.

Elevator (Floor): Crossville Ceramics, Nero VS105.

Manufacturer's referenced are not intended to limit the selection of equal colors from other manufacturers.

1.4.2 **Exterior Finishes**

Shall match buildings in restricted area.

1.5 FURNITURE

1.6 Furniture Layout(Furniture is not in contract) and provided for reference only.

Furniture layout will be functional and coordinate with the building design to assure that locations of electrical and communication outlets, and lighting within the building are appropriate. The layout will also be coo rdinated with other building features such as architectural elements, thermostats, lighting, location of TVs, etc. Furniture shall be located in front of windows only if the top of the item falls below the window. The furniture layout shall conform to requirements specified in 36 CFR 1191, FED-STD 795, and NFPA 101.

PART 2 NOT USED

PART 3 NOT USED

-- End of Section --

SECTION TABLE OF CONTENTS

DIVISION 01 - GENERAL REQUIREMENTS

SECTION 01005

STRUCTURAL REQUIREMENTS

PART 1 STRUCTURAL

1.1 PROJECT DESCRIPTION AND REQUIREMENTS
1.2 DESIGN CRITERIA
1.2.1 Department of the Air Force Technical Manuals (AFM)
1.2.2 US Army Corps of Engineers Technical Instructions (TI)
1.2.3 Unified Facilities Criteria (UFC)
1.2 Miscellaneous codes andMilitary Publications
1.3 American Society of Civil Engineers (ASCE) Publication
1.4 American Concrete Institute Publications
1.5 American Institute of Steel Construction Publication
1.6 American Welding Society
1.7 Federal Emergency Management Agency Publications
1.8 Steel Deck Institute (SDI) Publications
1.9 Steel Joist Institute (SJI) Publications
1.10 STRUCTURAL LOADING CRITERIA
1.10.1 Roof Live Loads
1.10.1.1 Snow Load
1.10.1.2 Rain Loads
1.10.1.3 Minimum Roof Live Load
1.10.2 Floor Live Loads
1.10.3 Wind Loads
1.10.4 Seismic Loads
1.10.5 Dead Loads
1.10.6 Lateral Partition Loads
1.10.7 Design Temperatures
1.10.8 Deflections
1.10.8.1 Floors
1.10.8.2 Roofs
1.10.8.3 Partitions
1.10.9 Antiterrorism/Force Protection
1.11 STRUCTURAL MATERIALS
1.11.1 Structural Steel
1.11.1.1 Design
1.11.1.2 Connections
1.11.2 Steel Joists and Joist Girders
1.11.3 Steel Decking
1.11.4 Masonry
1.11.4.1 Design
1.11.4.2 Masonry Material Properties
1.11.4.3 Crack Control
1.11.5 Reinforced Concrete
1.11.5.1 Design
1.11.5.2 Concrete Strength
1.11.5.3 Reinforcing Bar Usage Limitations
1.11.5.4 Concrete Joints
1.11.6 Precast Concrete
1.11.6.1 Design

1.11.6.2 Precast Concrete Strengths
1.12 STRUCTURAL FRAMING SYSTEMS
1.12.1 Roof Framing
1.12.2 [Enter Appropriate Subpart Title Here]
1.12.3 Location of Structural Elements
1.13 EXTERIOR/INTERIOR WALLS
1.13.1 Non-Load-Bearing Walls
1.13.2 Shear Walls
1.14 FOUNDATION SYSTEMS
1.14.1 Earthwork
1.14.2 Foundation Systems
1.14.3 Design Parameters
1.14.4 Foundation Perimeter Insulation
1.14.5 Frost Protection
1.14.6 Structural Stoops at Exterior Doorways
1.15 CONCRETE FLOOR SLABS-ON-GRADE
1.15.1 General
1.15.2 Interior Concrete Slabs-on-Grade
1.15.2.1 Capillary Water Barrier Layer
1.15.3 Slabs to Receive Porcelain Tile
1.15.4 Floor Tolerances
1.15.5 Interior Equipment Pads
1.15.6 Equipment Vibration Isolation
1.9 OTHER STRUCTURAL WORK
1.16 Exterior Equipment Pads
1.17 Exterior Screen Walls

PART 2 NOT USED

PART 3 NOT USED

-- End of Section Table of Contents --

SECTION 01005

STRUCTURAL REQUIREMENTS

PART 1 STRUCTURAL

1.1 PROJECT DESCRIPTION AND REQUIREMENTS

The two-story Consolidated Space Group Operations Facility will consist of but is not limited to the following spaces: operations management, storage areas, briefings/debriefings, training, planning, testing, technical order libraries, evaluations and scheduling areas, elevator, locker rooms, mechanical, electrical,communications rooms, and optional crawl space areas.

The building shall be structurally designed and configured by the Design/Build Contractor in accordance with the criteria and other requirements stated herein. Antiterrorism/Force Protection Design is required in accordance with DoD minimum Antiterrorism Standards for Buildings.

1.2 DESIGN CRITERIA

The design publications listed below shall be used as sources of criteria for structural design. The criteria from these sources may be supplemented, but not supplanted, by applicable criteria contained in nationally recognized codes, standards, and specifications. (In all cases, later editions to the below listed documents may be used.)

1.2.1 Department of the Air Force Technical Manuals (AFM)

(These manuals are available from the National Institute of Building Sciences Construction Criteria Base (CCB) (See Section 01332, SUBMITTALS DURING DESIGN for availability). Some of these manuals may be available to download in Acrobat .pdf file format at the following internet address: (http://www.hnd.usace.army.mil/techinfo.)

AFM 88-3 Chap. 3 Masonry Structural Design for Buildings (Oct 92)

AFM 88-3 Chap. 15 Concrete Floor Slabs on Grade Subjected to Heavy Loads (Aug 87)

1.2.2 US Army Corps of Engineers Technical Instructions (TI)

(Available at http://www.hnd.usace.army.mil/techinfo and is listed under "Engineer Instructions".)

TI 809-02 Structural Design Criteria for Buildings (Sep 99)

TI 809-04 Seismic Design for Buildings (Dec 98)

TI 809-07 Design of Cold-Formed Load Bearing Steel Systems and Masonry Veneer/Steel Stud Walls (Nov 98)

TI 809-29 Structural Considerations for Metal Roofs (Aug 98)

TI 809-30 Metal Building Systems (Aug 98)

TI 809-52 Commentary on Snow Loads (Aug 98)

1.2.3 Unified Facilities Criteria (UFC)

UFC 1-200-01 Design: General Building Requirements (Jul 02)
UFC 4-010-01 DOD Minimum Antiterrorism Standards For Buildings (Jul 02)

1.2 Miscellaneous codes andMilitary Publications

Omaha District, Design Guide

US Army Military Handbook 1190, Facility Planning and Design Guide

Schriever AFB Installation Design Guide,Internationl Building Code (IBC) 2000

Facility Installation Standard (50SW133-105) 3 January 2000

1.3 American Society of Civil Engineers (ASCE) Publication

ASCE 7-98 Minimum Design Loads for Buildings and Other Structures

1.4 American Concrete Institute Publications

ACI 117/117R-90 Standard Specification for Tolerances for Concrete Construction and Materials and Commentary

ACI 318M-02 Building Code Requirements for Structural Concrete and Commentary

ACI 530/530.1R-89 Building Code Requirements for Masonry Structures and Specifications for Masonry Structures

1.5 American Institute of Steel Construction Publication

Specification for Structural Steel Buildings - Allowable Stress Design, Plastic Design (ASD) (June 1, 1989)

Load and Resistance Factor Design Specification for Structural Steel Buildings (LRFD) (December 1, 1993)

1.6 American Welding Society

Structural Welding Code - Steel, D1.1/D1.1M (2002 Edition)

1.7 Federal Emergency Management Agency Publications

(These publications can be obtained at no charge from:

FEMA Report Distribution Center
PO Box 2012
Jessup, MD 20794
Telephone: 800-480-2520; Fax: 301-497-6378)

FEMA 368 NEHRP Recommended Provisions for Seismic Regulations for New Buildings and Other Structures : Part 1 - Provisions (March 2001)

FEMA 369 NEHRP Recommended Provisions for Seismic Regulations for New Buildings and Other Structures : Part 2 - Commentary (March 2001)

1.8 Steel Deck Institute (SDI) Publications

Diaphragm Design Manual (1991 Edition)

Design Manual for Composite Decks, Form Decks and Roof Decks (Pub No. 30, April 2001)

1.9 Steel Joist Institute (SJI) Publications

Standard Specifications, Load Tables and Weight Tables for Steel Joists & Joist Girders (1994)

1.10 STRUCTURAL LOADING CRITERIA

Structural loading criteria shall be developed using the criteria sources and following the procedures indicated below. The Consolidated Space Group Operations Facility shall be classified as an Occupancy Category II (per ASCE-7) facility for the purpose of calculating wind and snow loads. The Consolidated Space Group Operations Facility shall be classified as a Seismic Use Group I facility, in accordance with TM 809-04, for the purpose of calculating seismic loads.

1.10.1 Roof Live Loads

1.10.1.1 Snow Load

Roof snow load shall be calculated and applied in accordance with ASCE 7 and Army Corps of Engineers TI 809-52, using a ground snow load of 20 psf. Additional loading associated with snow drifting and unbalanced snow conditions shall be considered and applied in accordance with ASCE 7.

1.10.1.2 Rain Loads

Rain loads shall be considered in accordance with ASCE 7.

1.10.1.3 Minimum Roof Live Load

A minimum roof live load of 30 psf shall be used as a loading condition for the roof independent and non-concurrent with the calculated snow load.

1.10.2 Floor Live Loads

Minimum uniformly distributed floor live loads shall be as listed below:

AREA	LIVE LOAD (psf)
Mechanical/Electrical Rooms	150

Mezzanine	50
Offices	50 + 20 (Partitions/Furn)
Restrooms	50
Storage Rooms	125
Stairs and landings	100
Safes for classified material	Use actual weights
All Other Areas	See ASCE 7

The floors shall be capable of supporting a 2000 lb concentrated load applied over a 30 inch by 30 inch area positioned anywhere.

Stairs and landings shall be designed to support the uniform load listed above or a concentrated load of 300 lbs on an area of 4 sq.in., whichever produces the greater load effects.

Raised floor panels shall be designed for a loading and deflection requirement in specification 10270. The concentrated load and uniform load shall be 1500 lbs and 350 psf respectively. Additional strengthing of the raised floor will be require for GFCI Floor Safes see Section 01003(Architectural). Cable tray system conductors shall be grounded to the raised floor structural system in accordance with Facility Installation Standard (50SW133-105).

1.10.3 Wind Loads

Wind loads shall be calculated in accordance with the procedures outlined in ASCE 7, using Exposure "C" and a Basic Wind Speed (3-Second Gust Speed) of 90 mph. Wind loads for both the main wind-force resisting system and for components and cladding shall be considered.

1.10.4 Seismic Loads

The Consolidated Space Group Operations Facility shall be designed to withstand seismic loading in accordance with Army Corps of Engineers TI 809-04. Seismic Parameters for Schriever AFB are as follows:

Seismic parameters are as follows:
Seismic Use Group: I
Short Period Spectral Response Acceleration (SS) = 0.17
1 Second Period Spectral Response Acceleration (S1) = 0.05

1.10.5 Dead Loads

Minimum design dead loads for common building materials shall be obtained from ASCE 7. Equipment loads and loads for materials not listed in that publication can be obtained from other recognized sources. In office areas and other areas of the building, where partitions will be elected of rearranged provision for a partition allowance of 20 psf shall be included. A satellite dish, size to be determined, is to be placed on the roof of the building. The roof structure shall be designed for dead and all other associated loads from the dish. Ladder access from the building interior to the dish is required.

1.10.6 Lateral Partition Loads

The minimum design wind pressure on interior partitions shall be 10 psf normal to the partition.

1.10.7 Design Temperatures

Design differential temperatures shall be a minimum 130 degrees F for thermal analysis of framing systems.

1.10.8 Deflections

Roof and floor members and walls shall be designed to have deflections limited to the following maximums.

1.10.8.1 Floors

The deflection due to live load of structural members supporting floors shall not exceed 1/360 of the member span. The deflection due to dead and live load shall not exceed 1/240 of the member span.

1.10.8.2 Roofs

The deflection of structural members supportingroofs due to dead, live, wind, or snow loadings shall not exceed 1/240 of the member span.

1.10.8.3 Partitions

The deflection of interior partitions due to lateral pressures shall not exceed 1/240 of the partition span.

1.10.9 Antiterrorism/Force Protection

The structural design shall incorporate the special requirements for Antiterrorism/Force Protection as given in United Facilities Criteria (UFC 4-010-01), Department of Defense Antiterrorism Standards For Buildings.

1.11 STRUCTURAL MATERIALS

Materials for structural elements shall be as indicated herein or on the attached architectural drawings. Where materials are not indicated, selection shall be at the Contractor's discretion, with the following limitations. Wood products are not acceptable for use as structural elements. Cold formed, lightgage metal framing (steel studs) are not acceptable as gravity load-bearing or lateral force-resisting systems.

1.11.1 Structural Steel

1.11.1.1 Design

Structural steel shall be designed in accordance with AISC Specification for Structural Steel Buildings - ASD or LRFD. All structural steel members shall be designed by the structural engineer to support all applicable loads. Structural drawings shall clearly show all structural members, connections and their locations.

1.11.1.2 Connections

Types of connections shall be consistent with the design assumptions for the basic type of steel construction used. Connections shall be designed and detailed to provide adequate capacities for the applied forces and moments. Connection design shall be the responsibility of the structural engineer and shall not be delegated to the steel fabricator.

1.11.2 Steel Joists and Joist Girders

The design and selection of steel joists and joist girders shall be governed by the Steel Joist Institute (SJI) Standard Specifications, Load Tables and Weight Tables for Steel Joists and Joist Girders. The net wind uplift requirements shall be clearly delineated on the drawings. Joists requiring special configurations or design to resist wind uplift and non-uniform loads shall be designated as such on the drawings and the required design loads indicated, per SJI recommendations. Joist end supports and anchorage to resist uplift shall be designed to accommodate the applied forces, including those resulting from wind and seismic activity.

1.11.3 Steel Decking

The design and selection of steel deck shall be in accordance with the provisions of the Steel Deck Institute (SDI) Design Manual. Minimum required section properties of deck sections shall be determined as prescribed by the appropriate Specifications of the SDI Design Manual, and shall be specified or indicated on the drawings. Where the steel deck is designed to function as a shear diaphragm, the design shall be in accordance with the provisions of the Steel Deck Institute (SDI) Diaphragm Design Manual and Army Corps of Engineers TI 809-04.

1.11.4 Masonry

1.11.4.1 Design

Masonry design shall be in accordance with ACI 530-92, AFM 88-3 Chap. 3 and Army Corps of Engineers TI 809-02 and 809-04. Reinforcement shall be sufficient to satisfy the calculated requirements for strength, shrinkage crack control, and seismic design. In no case shall reinforcement be less than the minimum seismic reinforcement required by TI 809-04. If masonry walls are used in conjunction with steel framing as non-load-bearing and non-shear-resisting elements, the connections between walls and the structural steel frames must be designed to allow vertical and horizontal frame deflection without transferring loads from steel to adjoining masonry walls.

1.11.4.2 Masonry Material Properties

Specified compressive strength of masonry shall be fm = 1350 psi. Hollow concrete masonry units shall conform to ASTM C90, Type I. Type S mortar shall be specified for all masonry. Specified compressive strength of grout shall be 2000 psi minimum.

1.11.4.3 Crack Control

Concrete masonry crack control measures comprised of masonry control joints, joint reinforcement, and bond beams shall be incorporated in the design of concrete masonry walls and partitions. Masonry Control Joints (MCJ) shall be judiciously located at spacings no greater than the maximums recommended in AFM 88-3 Chap. 3 and shall be shown on the Architectural elevations. Control joints shall not be placed closer than 24 inches from openings.

1.11.5 Reinforced Concrete

1.11.5.1 Design

Reinforced concrete design shall be in accordance with ACI 318 and related current ACI publications which are applicable to the design, TI 809-02 and AFM 88-3 Chap. 15, and Army Corps of Engineers TI 809-04, as applicable. All concrete elements, including slabs-on-grade, shall be reinforced with temperature and shrinkage reinforcement as a minimum. Temperature reinforcement shall be as recommended by ACI and TI 809-02, as appropriate.

1.11.5.2 Concrete Strength

The required 28-day compressive strength of the concrete shall be left to the Contractor's discretion, except that 3000 psi shall be a minimum. For concrete that is to be installed with exterior exposure, air-entrainment, producing a total air content in the concrete between 4 and 7 percent by volume, shall be required. Concrete in contact with soil shall be made with Type II Cement. The maximum water-cement (w/c) ratio shall be 0.45.

1.11.5.3 Reinforcing Bar Usage Limitations

Grade 60 ksi bars shall be used for concrete design. When available, grade 40 ksi bars may be used for secondary reinforcement such as stirrups and ties. Minimum bar size shall be #4 bars except for stirrups and ties which may be #3 bars as per ACI.

1.11.5.4 Concrete Joints

Control joints and contraction joints shall comply with AFM 88-3, Chapter 15 and TI 809-02, Chapter 5, and shall be located to reduce concrete cracking to a minimum. All exposed concrete joints shall be sealed with appropriate joint sealants.

1.11.6 Precast Concrete

1.11.6.1 Design

The design shall conform with the requirements of ACI 318, Chapter 16 - Precast Concrete. The precast units shall be designed for all applicable loads indicated in paragraph STRUCTURAL LOADING CRITERIA and the design shall consider all loading and restraint conditions from initial fabrication to completion of the structure. Flexural members shall be designed to support full live load acting in combination with full dead load, plus concentrated loads from any mechanical equipment actually furnished. The effects of initial and long-time deflections as well as transporting the units shall be considered in the design of precast members. Attachment of precast units shall be by welding, bolting or embedment of bars or other connection devices, at the Contractor's option.

Ribbed concrete panels shall be plant cast off-site unless otherwise approved in writing by contracting officer. It is contractor's option to achieve R-13 wall insulation value by integrally casting insulation into panel system, or provide furring and insulation system at interior face of concrete panels. If furring option is chosen, interior surface of furring shall be painted and have first 8 FT of wall height finished with painted MDO plywood.

1.11.6.2 Precast Concrete Strengths

The required 28-day compressive strength of precast concrete shall be left

to the Contractor's discretion, except that 5000 psi shall be a minimum. For any precast units that are to be installed with exterior exposure, air-entrained concrete, with a total air content between 4 and 7 percent by volume, shall be required.

1.12 STRUCTURAL FRAMING SYSTEMS

The structural systems used for the Consolidated Space Group Operations Facility shall be selected and designed by the Contractor. The lateral load resisting system shall incorporate bracing, moment resisting frames, shear walls, diaphragms, or any combination thereof, provided the elements of the system are compatible with the attached architectural floor plan. The seismic force-resisting elements shall conform to the requirements of TI 809-04 and FEMA 302. The structural framing system chosen shall meet all aforementioned project requirements and the requirements listed below.

1.12.1 Roof Framing

The roof of the building shall slope as required for the type of roofing system used. The roof slope shall be accomplished by sloping of the structural framing members. The design of roof framing members shall include consideration of any concentrated loads from suspended mechanical and electrical equipment, including cable trays and HVAC units. The location and magnitude of suspended equipment loads shall be closely coordinated with the mechanical and electrical system designs. See Section 01003 ARCHITECTURAL REQUIREMENTS for minimum and maximum structure elevation requirements.1.12.2 [Enter Appropriate Subpart Title Here]

1.12.3 Location of Structural Elements

Structural elements, including columns, bracing, shear walls and load-bearing walls shall be located as required by the structural design. The structural design and corresponding selection and location of structural elements shall be compatible with the floor plan, roof plan, elevations and other architectural drawings of this document. Columns shall be located in an orthogonal grid pattern to be repeated along both major axis of the facility to the greatest extent possible, and in such a manner that doorways or other access ways are not obstructed. Use of structural bracing shall be minimized, and shall be limited to locations where bracing is concealable at interior or exterior wall lines and does not obstruct windows, doors or other openings. Shear walls, where used, shall be located in coordination with architectural partition requirements.

1.13 EXTERIOR/INTERIOR WALLS

Criteria indicated in Section 01003 ARCHITECTURAL REQUIREMENTS shall be incorporated into the design of all walls. The Architectural floor plans as part of this document indicate the location of walls to be incorporated into the project.

1.13.1 Non-Load-Bearing Walls

Non-load-bearing walls shall be laterally braced by the structure, and shall be connected in a manner which provides for vertical deflection of the structure without inducing vertical loads into the walls.

1.13.2 Shear Walls

Shear walls, where used, shall be constructed of cast-in-place or precast reinforced concrete at the Contractor's choice. Shear walls shall be designed in accordance with ACI 318, Chap. 3, and Army Corps of Engineers TI 809-04.

1.14 FOUNDATION SYSTEMS

Design of foundation components shall be the responsibility of the contractor. The components of the foundation system shall be constructed of reinforced concrete. The required 28-day compressive strength of concrete for the foundations shall be left to the Contractor's discretion, except that 3000 psi shall be a minimum. All parts of the foundation system shall be designed to keep dead load footing pressures relatively uniform, in order to minimize differential settlements.

A Final Foundation Analysis has been prepared and is attached to the RFP.

1.14.1 Earthwork

Earthwork for the Consolidated Space Group Operations Facility shall conform to the requirements set forth in Technical Specification 02315a EXCAVATION, FILLING AND BACKFILLING FOR BUILDINGS and to requirements stated in the Final Foundation Analysis.

1.14.2 Foundation Systems

The Final Foundation Analysis calls for the foundation system for the Consolidated Space Group Operations Facility to consist of conventional continuous and spread footings bearing on native or recompacted native material. An excess bearing pressure of 2000 psf shall be used for frost depth of 3 feet on recompacted native material per the soils report. An excess bearing pressure of 2500 psf shall be used for footings greater than 12 feet in depth on native material. A foundation drainage system shall be provided around the optional crawl space(s) and tied into the underground storm drainage system.

1.14.3 Design Parameters

Parameters used for foundation design, including the allowable soil bearing pressure, lateral earth pressure coefficients and design footings depths shall be in accordance with the Final Foundation Analysis report provided.

1.14.4 Foundation Perimeter Insulation

Perimeter insulation shall be installed on the interior face of all exterior perimeter foundation walls except in the crawl space. Perimeter insulation shall be placed on the exterior of the foundation wall at crawl space. Insulation shall extend from the bottom of the floor slab down to the top of the footing.

1.14.5 Frost Protection

The depth for frost protection expected in the ground used in the design of the foundation systems is 36 inches. The corresponding minimum design depth for bottom of building foundations from finish grade shall be 36 inches.

1.14.6 Structural Stoops at Exterior Doorways

All exterior pedestrian doorways require structural stoops. Stoops shall have foundation walls extending down to frost depth and shall be rigidly attached to building foundation walls. Stoops shall comply with the subgrade and building pad requirements of the Final Foundation Analysis. The stoop slab shall be flush with the interior floor slab at the threshold and shall slope away from the building at a 1/8" per foot slope.

1.15 CONCRETE FLOOR SLABS-ON-GRADE

Design of slabs shall be in accordance with TI 809-02, AFM 88-3 Chap. 15and the following detailed instructions:

1.15.1 General

Slabs shall be designed as "floating slabs" without rigid edge support, and with lateral and vertical movement unrestrained, except where noted below. Where compressible filler is used as a cushion, its thickness shall be not less than 2 inches. An isolation joint, consisting of a 1/2 inch layer of expansion joint material, is required where slabs abut vertical surfaces. Slab thicknesses shall be selected in accordance with AFM 88-3, Chapter 15, TI 809-02 or as required by design. Slabs shall be reinforced with a minimum of 0.15 percent steel based on cross sectional area. Crack control measures shall be incorporated in the slab design. Control joint details and spacings shall be as delineated in AFM 88-3, Chapter 15 and TI 809-02. The required 28-day compressive strength of concrete for slabs shall be left to the Contractor's discretion, except that 3000 psi shall be a minimum.

1.15.2 Interior Concrete Slabs-on-Grade

Interior slabs-on-grade shall be placed over a capillary water barrier material not less than 6 inches in compacted thickness on a 8 ounces per sq. yd., non-woven geotextile over a 20 mil non-reinforced vapor barrier. Sand is to be placed over the capillary water barrier to fill any voids and to cover the aggregate before concrete slab is placed. The geotextile fabric shall be placed between the capillary water barrier and the vapor barrier to prevent damage to the vapor barrier.The radon de-pressurization system is required under all interior slabs. The radon system shall be located under the vapor barrier and provide adequate support so the vapor barrier will not be punctured, see Radon De-Pressurization System Section 01006 Mechanical Requirements. The subgrade under interior slabs-on-grade shall be overexcavated two feet and recompacted to 95% of maximum per ASTM D 1557. All slab crack control joints, construction joints, isolation joints between edges of slabs and vertical surfaces, and any mechanical, plumbing or electrical penetrations through the floor slab shall be sealed with a flowable polyurethane caulk.

1.15.2.1 Capillary Water Barrier Layer

Capillary Water Barrier material shall consist of clean, crushed, nonporous rock, crushed gravel, or uncrushed gravel. The maximum particle size shall be 1.5 inches and no more than 2 percent by weight shall pass the No.4 sieve. The portion of the material passing the No.40 size sieve shall be non-plastic or shall have a plasticity index of less than or equal to 10. The capillary water barrier shall be placed in a minimum of 2 lifts, each compacted by a hand operated, vibratory compactor.

1.15.3 Slabs to Receive Porcelain Tile

Slabs to receive finishes requiring an inset grout bed or frame shall be 5 inches uniform in thickness, and shall be reinforced with #4 bars at 12 inches o.c. each way. Slabs shall be depressed as necessary to receive the porcelain tile. At interior edge locations, the slab shall be thickened and doweled into the adjacent slab with 0.75 inch diameter x 16 inch long dowels at 12 inches o.c.. At locations where the slab abuts an exterior foundation wall, it shall be supported by the wall.

1.15.4 Floor Tolerances

There are no special flatness and levelness requirements for the floor, however, the flatness and levelness of all concrete slabs-on-grade shall be carefully controlled and the tolerances measured by the F-Number or straightedge system of ACI 117/117R. The minimum surface profile quality classifications for float and trowel finishes surfaces shall be "flat" as defined in ACI 117/117R. All other finishes shall meet the criteria set forth in ACI 117/117R.

1.15.5 Interior Equipment Pads

Floor mounted mechanical and electrical equipment shall be installed on 6 inch thick raised concrete housekeeping pads. The pads shall be reinforced with at least the minimum temperature reinforcement required. The pads shall be sized 6 inches larger all around than the piece of equipment furnished and all edges of the pad shall be chamfered.

1.15.6 Equipment Vibration Isolation

All vibration producing mechanical and electrical equipment shall be mounted in such a manner as to prevent the transfer of vibrations to adjacent parts or areas of the building. If necessary for any large vibration producing equipment installed within the facility, the equipment will be supported on individual isolated foundations. The isolated foundation shall be separated from the building slab by a continuous 3/4 inch expansion joint.

1.9 OTHER STRUCTURAL WORK

1.16 Exterior Equipment Pads

Any exterior mechanical or electrical equipment shall be installed on concrete pads. The pads shall be a minimum of 18 inches thick and shall be reinforced with at least the minimum temperature reinforcement required. The pads shall be sized 12 inches larger all around than the piece of equipment furnished and all edges of the pad shall be chamfered. Design of exterior pads shall be coordinated with Mechanical and Electrical system designs.

1.17 Exterior Screen Walls

Exterior screen walls for the purpose of concealing equipment shall be constructed of cast-in-place concrete or concrete masonry units, and shall have a facing to match or compliment the exterior of the main building. Screen wall footings shall extend below frost depth.

PART 2 NOT USED

PART 3 NOT USED

-- End of Section --

SECTION TABLE OF CONTENTS

DIVISION 01 - GENERAL REQUIREMENTS

SECTION 01006

MECHANICAL REQUIREMENTS

12/07/01

PART 1 MECHANICAL REQUIREMENTS

1.1 MECHANICAL SYSTEMS CRITERIA
1.1.1 General Parameters/References

PART 2 PRODUCTS & EXECUTION

2.1 GENERAL REQUIREMENTS
2.1.1 Facility Description
2.1.2 Design Conditions
2.1.3 Mechanical Room Layout Requirements
2.1.4 Mechanical/Electrical Equipment Coordination
2.1.5 General Piping Requirements
2.1.6 Roof Mounted Equipment
2.1.7 Vibration Isolation/Equipment Pads
2.1.8 Permanent Maintenance Instrumentation
2.1.9 Temporary Control Instrumentation
2.1.10 Color Coding Scheme for Locating Hidden Utility Components
2.1.11 Utility Interruptions
2.1.12 Power Outage Start-Up
2.1.13 Spare Parts Lists
2.1.14 Equipment Room Diagrams
2.1.15 Interior Design - Color Coordination
2.2 EQUIPMENT IDENTIFICATION AND ABBREVIATIONS
2.2.1 Equipment Identification
2.2.2 Abbreviations
2.3 IDENTIFICATION OF PIPING
2.4 PROTECTION FOR MECHANICAL PIPING AND EQUIPMENT
2.4.1 Piping
2.4.2 Ductwork
2.4.3 Floor Mounted or Suspended Equipment
2.4.4 Miscellaneous Equipment
2.5 THERMAL INSULATION OF MECHANICAL SYSTEMS
2.5.1 Insulation Covers
2.6 PLUMBING SYSTEM
2.6.1 Water Service Entrances
2.6.2 Piping Runs
2.6.3 Pipe Materials
2.6.4 Protection of Water Supplies
2.6.5 Fixtures
2.6.6 Janitors Closet Mop Sinks
2.6.7 Breakrooms
2.6.8 Electric Water Coolers
2.6.9 Water Hammer Arresters
2.6.10 Wall Hydrants
2.6.11 Wall Faucets
2.6.12 Lawn Irrigation
2.6.13 Not Used

2.6.14 Service Stop Isolation Valves
2.6.15 Floor Drains
2.6.16 Cleanouts
2.6.17 Plumbing Vents
2.6.18 Duct Drainage
2.6.19 Domestic Hot-Water
2.6.19.1 Domestic Hot Water Re-circulation System
2.6.20 Storm Drain System
2.6.21 Cathodic Protection
2.7 EXTERIOR GAS DISTRIBUTION SYSTEMS
2.7.1 Service Lines
2.7.2 Service Line Sizing
2.7.3 Service Line Materials
2.7.4 Service Line Markers
2.7.5 Service Line Protection
2.7.6 Cathodic Protection
2.7.7 Gas Meters
2.8 INTERIOR GAS PIPING SYSTEMS
2.8.1 Gas Piping
2.8.2 Equipment Connections
2.9 GAS FIRED HEATING SYSTEMS
2.10 HYDRONIC HEATING SYSTEMS
2.10.1 Boilers
2.10.1.1 Boiler Connections
2.10.1.2 Low-Water Cutoffs
2.10.1.3 Water Column Connections
2.10.1.4 Smoke Connection
2.10.1.5 Boiler Flue Termination
2.10.1.6 Boiler Location
2.10.2 Heating Water Distribution Pumps
2.10.3 Expansion Tanks
2.10.4 Air Separation Tanks
2.10.5 Water Treatment Systems
2.10.6 Air handling Unit Coils
2.10.7 Variable Air Volume Box Reheat Coils
2.10.8 Piping
2.10.8.1 Pipe Materials
2.10.8.2 Pipe Joints
2.10.8.3 Pipe Expansion
2.10.9 Vents and Stacks
2.10.10 Heating of Mechanical Equipment Rooms
2.10.11 Combustion Air
2.10.12 Fintube
2.10.13 Not Used
2.10.14 Unit Heaters
2.11 ELECTRIC RESISTANCE HEATING
2.12 CHILLED WATER SYSTEMS
2.12.1 Refrigeration System.
2.12.2 Chilled Water System Design.
2.12.3 Other Systems
2.12.4 Chilled Water Distribution Pumps
2.13 AIR SUPPLY AND DISTRIBUTION, AND VENTILATION AND EXHAUST SYSTEMS
2.13.1 System Designs
2.13.2 Air Handling Units
2.13.2.1 AHU Systems in Administration area, Men's & Women's Toilet Rooms, etc.
2.13.3 Filtration
2.13.4 Ductwork
2.13.5 Ceiling Mounted Supply Diffusers

2.13.6 Ceiling Mounted Return Grilles
2.13.7 Supply and Exhaust Fans
2.13.8 Outdoor Intakes and Exhausts
2.13.9 Special Requirements
2.13.9.1 Toilet Rooms
2.13.9.2 Janitors Closet
2.13.9.3 Mechanical and Electrical Equipment Rooms
2.13.10 Security
2.14 BUILDING TEMPERATURE CONTROL SYSTEMS
2.14.1 General DDC Requirements
2.14.2 DDC/EMCS DDD Panels and DTC Panels
2.14.2.1 Editing Technical Guide Specification Section 15951A DIRECT DIGITAL CONTROL FOR HVAC
2.14.2.2 Controllers
2.14.2.3 Digital Controllers
2.14.2.4 Stand-Alone Operation
2.14.3 Input/Output Devices
2.14.4 Analog Sensors, Digital inputs & Digital outputs
2.14.5 Cable and Wiring
2.14.6 Control Valves
2.14.7 Variable Air Volume Boxes
2.14.8 Damper Actuators
2.14.9 Valve Actuators
2.14.10 HVAC Control Drawings
2.14.11 Control Schematic
2.14.12 Elementary Diagram
2.14.13 Sequence of Control
2.14.14 Description of Components
2.14.15 Control Panel Detail
2.14.16 Legends and Schedules
2.14.17 System Checklists and Startup Instructions
2.15 TESTING, ADJUSTING, AND BALANCING OF HVAC SYSTEMS
2.15.1 Balancing Firms Qualifications
2.16 CRAWL SPACE(S) (OPTIONS 1,2 AND 3)
2.17 RADON DE-PRESSURIZATION SYSTEM
2.17.1 General
2.17.2 Radon Exhaust Ductwork
2.18 TECHNICAL SPECIFICATIONS
2.19 ENERGY USE BUDGET (EUB) COMPLIANCE CHECK
2.19.1 Computer Simulation
2.19.1.1 Acceptable Engineering Procedures
2.19.1.2 Capable of Change
2.19.1.3 Cooling and Heating Loads Influencing the Building Design
2.19.1.4 Alternatives
2.19.2 Summary Report
2.20 TRAINING
2.20.1 Training Course Content

-- End of Section Table of Contents --

SECTION 01006

MECHANICAL REQUIREMENTS

12/07/01

PART 1 MECHANICAL REQUIREMENTS

1.1 MECHANICAL SYSTEMS CRITERIA

1.1.1 General Parameters/References

Mechanical systems, including HVAC systems, plumbing, exterior gas distribution, gas piping and building temperature controls shall be designed to comply with this section and the documents listed below to the extent referenced in this section. The publications are referred to in the text by basic designation only. The latest edition of the following standards and codes in effect and amended as of date of supplier's proposal, and any subsections thereof as applicable, shall govern design and selection of equipment and material supplied:

Air Force Manual (AFM) 88-36/Army Technical Manual (TM) TM 5-815-2, Energy Monitoring and Control Systems EMCS).

American Conference of Government Industrial Hygienists (ACGIH Industrial Ventilation: A Manual of Recommended Practice

American Society for Testing and Materials (ASTM) publications - A53.

American Society of Heating, Refrigerating, and Air Conditioning Engineers (ASHRAE):

Guides:

Terminology of HVAC&R, Second Edition;
Guideline 1, The HVAC Commissioning Process;
Guideline 3, Reducing Emission of CFC Refrigerants in Refrigeration;
Guideline 12, Minimizing the Risk of Legionellosis Associated with Building Water Systems.
Guideline 13, Specifying Direct Digital Control (DDC) Systems

Handbooks:

2002 Refrigeration.
2001 Fundamentals;
2000 HVAC Systems & Equipment;
1999 HVAC Applications;

Practices:

ASHRAE Terminology of HVAC&R;
Pocket Guide for Air-Conditioning.

Standards:
15, Safety Code for Mechanical Refrigeration;

55a Thermal Environmental Conditions for Principles of Heating, Ventilating and Air-Conditioning;

62 Ventilation for Acceptable Indoor Air Quality;

90.1 Energy Standard for Buildings Except Low-Rise Residential Buildings (IESNA COSPONORED) (ANSI COSPONORED)with amendments.

52.1 Gravimetric and Duct Spot Procedures for Testing Air-Cleaning Devices Used in General Ventilation for Removing Particulate Matter;

52.2 Testing General Ventilation Air-Cleaning Devices for Removal Efficiency by Particle Size;

129 Measuring Air-Change Effectiveness;

American Society of Mechanical Engineers (ASME), 22 Law Drive, P.O. box 2900, Fairfield, N.J. 07007-2900, A17.1 Safety Code for Elevators & Escalators, ASME, 1996; B36.10, 61; section 8 & 9.

Army Technical Instructions TI 809-04 Seismic Design for Buildings, dated December 1998.

Army Engineering Technical Letter (ETL) 1110-3-438 Indoor Radon Prevention and Mitigation, dated 15 September 1993.

Air Force Engineering Technical Letter (ETL) 94-2 Utility Meters in New and Renovated Facilities

Engineering Technical Letters (ETL) 94-4 Energy Usage Criteria for Facilities in the Military Construction Program.

Air Force Engineering Technical Letter (ETL) 00-5 Seismic Design for Buildings and Other Structures

Energy Policy Act of 1992 (Public Law 102-486).

Executive Order 12902, Energy Efficiency and Water Conservation at Federal Facilities.

- Executive Order 13123, Greening the Government Through Efficient Energy Management.

Instrument Society of America Standard (ISA S75.01).

International Building Code, ICBO.

International Plumbing Code, ICBO.

National Fire Codes (NFPA):

13 Installation of Sprinkler systems
54 National Fuel Gas Code
72 National Fire Alarm Code
90A Installation of Air Conditioning and Ventilating Systems

90B Installation of Warm Air Heating and Air Conditioning Systems
211 Chimneys, fireplaces, Vents and solid Fuel Burning Appliances.

National Fuel Code.

National Electrical Safety Code, IEEE.

National Sanitation Foundation

SMACNA - HVAC Systems - Duct Design.

SMACNA -HVAC Duct Construction Standard - Method and Flexible.

Title 10 CFR, Part 435, Subpart A, pages 4535-4720 inclusive, Energy Conservation Voluntary Performance Standards for New Commercial and Multi-family High Rise Residential Buildings, Mandatory For New Federal Buildings Published January 30, 1989.

Title 10 CFR Part 436 Federal Energy Management and Planning Programs, Life Cycle Cost Methodology and Procedures, January 25, 1990.

Underwriters Laboratories (UL 142),(UL 441).

Unified Facilities Criteria (UFC) 3-400-01 Design: Energy Conservation

Unified Facilities Criteria (UFC) 4-010-01 DoD Minimum Antiterrorism Standards for Buildings

Uniform Mechanical Code, ICBO.

US Green Building Council's Leadership in Energy & Environmental Design (LEED) http://www.usgbc.org/

DCID 1/21, Director of Central Intelligence Directive No. 1/21, Manual for Physical Security Standards for Sensitive Compartmented Information Facilities. (SCIFs), 30 Jan 94.

All other applicable NFPA and Air Force standards.

PART 2 PRODUCTS & EXECUTION

2.1 GENERAL REQUIREMENTS

The mechanical design shall consist of heating, ventilating, and air-conditioning, gas distribution, HVAC controls, plumbing, and other miscellaneous mechanical systems and equipment. Drawings, specifications, design analysis, and calculations shall be provided for both the 60 percent design and Final design submittals, and shall be in accordance with SECTION 01336 - 60 PERCENT DESIGN REQUIREMENTS, & SECTION 01338 - 100 PERCENT DESIGN REQUIREMENTS and FINAL BACKCHECK DESIGN SUBMITTALS.

This chapter contains instructions and engineering requirements for the following:

- Equipment Identification and Abbreviations.
- Identification of Piping.
- Protection for Mechanical Piping and Equipment.
- Thermal Insulation of Mechanical Systems.
- Plumbing Systems.

- Exterior Gas Distribution Systems.
- Interior Gas Piping Systems.
- Heating, Ventilating, and Air-conditioning Systems.
- Building Temperature Control Systems.
- Testing, Adjusting, and Balancing of HVAC Systems.
- Technical Specifications.
- Energy Use Budget (EUB) Compliance Check.
- Training.
- Commissioning of HVAC.

- Miscellaneous Mechanical Systems and Equipment.

a. Provide new mechanical systems, complete and ready for operation. The design and installation of all mechanical systems, including manufacturer's products, shall meet the instructions and requirements contained herein and the requirements of the provided technical guide specifications. Where conflicts between these instructions and the guide specifications or criteria exist, these instructions shall take precedence. Any installation requirements within these instructions, but not contained in the specifications, shall be added to the specifications or shown on the drawings. For minimum specification requirements see paragraph TECHNICAL SPECIFICATIONS.

b. Mechanical designs shall give maximum consideration to the comfort of the occupants. The design shall also be economical, maintainable, energy conservative and shall take into account the functional requirements and planned life of the facility. Mechanical designs shall also consider life cycle operability, maintenance and repair of the facility and real property installed equipment components and systems. Ease of access to components and systems in accordance with industry standards and safe working practices is a design requirement. All like equipment and accessories shall be from a single manufacturer.

c. Standard Products - Material and equipment shall be a standard product of a manufacturer regularly engaged in the manufacture of the product and shall be essentially duplicate items that have been in satisfactory use for at least 2 years prior to bid opening. The label or listing of the Underwriters Laboratories, Inc., will be accepted as evidence that the materials or equipment conform to the applicable standards of that agency. In lieu of this label or listing, a statement from a nationally recognized, adequately equipped testing agency indicating that the items have been tested in accordance with required procedures and that the materials and equipment comply with all contract requirements will be accepted.

d. Calculations shall be provided for all mechanical equipment such as heating & cooling coils, unit heaters, piping, pumps, fans, ducts, louvers, gas services and piping, plumbing, water heaters, gas distribution and etc. Heating and cooling calculations may be provided by computer analysis i.e., Elite Software Inc., Trane Trace Load 700, Carrier E20-II Hourly Analysis Program (HAP) version 3.04 loads program etc. Heat Loss calculation shall use actual design U-values. Design Energy Usage shall meet or be below Energy Use Budget target (see paragraph ENERGY USE BUDGET (EUB) COMPLIANCE CHECK).

2.1.1 Facility Description

The facility is a Consolidated Space Group Operations Facility and is to be

located at Schriever Air Force Base, Colorado. The facility will enhance the mission effectiveness, level of security and base operations.

Space is required for operations management, briefing/debriefing, planning, training, testing, safety, mobility functions, technical order libraries, locker rooms, and scheduling.

For mechanical calculation purposes, the normal operating hours of the facility are 6 a. m. to 6 p.m., 7 days a week.

Mechanical rooms, vestibules, janitor's closets, crawl spaces, and storage rooms shall be assumed as unoccupied. The following are occupied spaces with number of personnel required.

Room	Maximum Personnel
310th Space Group	
Group Commander	1
Group Administration	2
Executive Officer	1
Vice/Deputy Commander	1
Senior Enlisted Advisor/Superintendent	1
Career Advisor	1
Copier/Recycling/Shredder	0
Plans, Etc.	7
Conference	12
7th Space Operatiions Squadron	
Commander	1
Administration	1
Operations Officer	1
Copier/Recycling/Shredder	0
Scheduling	2
Standardization and Evaluation	3
1st Sergeant	1
Emulator	10
Training	10
Training Officer and Training NCO	3
Flight CC's/Ops Sup	3
Additional TR's	8
14th Test Squadron	
Commander	1
Administration	1
Operations Officer	1
Copier/Recycling/Shredder	0
Records and Data Management	0
1st Sergeant	1
Flight CC's	4
Additional TR's	34
19th Space Operations Squadron	
Commander	1
Administration	2
Operations Officer	1

1st Sergeant	1
Records and Data Management	0
Conference Room	8
Copier/Recycling/Shredder	0
Training (Classroom)	10
Emulator	10
Scheduling	2
Standardization and Evaluation	4
Training Officer and Training NCO	2
Flight NCO's	2
Flight CC's	2
Additional TR's	26
Additional FT's	15
26th Aggressor Squadron	
Commander	1
Administration	1
Operations Officer	1
Operations Superintendent	1
Copier/Recycling/Shredder	0
1st Sergeant	1
Additional TR's	19
FUTURE SCIF	
Entry Area	0
ISR Suite	5
Electronic Warfare	6
Conference Area	32
Shared Areas	
1st Floor Conference Room	12
1st Floor Breakroom	15
Mailroom	2
2nd Floor Conference Room	12
2nd Floor Breakroom	20

The above numbers are facility maximums. Normal occupancy will be the above numbers less the "Additional TR's".

2.1.2 Design Conditions

The following conditions shall be used in designing the mechanical systems:

1. Site Elevation:

Equipment design elevation is 6172 feet above sea level. Appropriate corrections shall be made when calculating the capacity of all mechanical equipment installed at this elevation.

2. Latitude: 38.82 Deg N
Heating Degree Days: 6766 annual (65°F)
Cooling Degree Days: 720 annual (65°F)

3. Outside Design Conditions:

Winter:
5°F DB for outside makeup air and infiltration loads.

12°F DB for transmission loads.

Summer:
85°F DB; 58°F MCWB for building loads
88°F DB air cooled equipment.

4. Inside Design Conditions:

Winter: 70°F for Office Spaces and Communications Closets.
55°F for Storage Areas, Mechanical Rooms, and ElectricalRooms.

Summer: 75°F for Office Spaces and Communications Closets.
98°F for Storage Areas, Mechanical Rooms, and Electrical Rooms.

5. Minimum Ventilation Requirements:

General: 20 cfm supply of outside air per person. Provide carbon dioxide sensors to modulate fresh air intake. Controls shall allow for two separate minimum outside air intake settings (both adjustable), one for normal or full time occupation, and one for temporary or maximum occupation.

Toilets: 2 cfm exhaust per square foot. Maintain negative pressure in toilets.

Locker Rooms: 2.5 cfm exhaust per square foot. Maintain negative pressure in locker room areas.

7. Cooling Loads:

Lighting - Coordinate with Electrical designer.
Communication equipment room. - Coordinate with Electrical designer. Communications equipment shall be assumed 100% resistive heating.
PC/Monitor/Printer = 850 watts total per station.
Staff/Visitors = 255 BTUH/person sensible and 255 BTUH/person latent; moderately active office work per ASHRAE Handbook of Fundamentals.

8. Building Pressurization:

Entire building shall be pressurized. For negative pressurization see paragraph MINIMUM VENTILATION REQUIREMENTS.

9. Anti-terrorism & Force Protection:

As applicable, the following shall be provided for all new mechanical systems:

a. Air intakes: Air intakes to heating, ventilation, and air conditioning (HVAC) systems that are designed to move air throughout a building that are at ground level provide an opportunity for aggressors to easily place contaminants that could be drawn into the building.

1) New buildings: For all new buildings covered by this document locate all air intakes at least 10-ft above the ground.

b. Emergency air distribution shutoff: For all new buildings provide an emergency shutoff switch in the HVAC control system that can immediately shut down air distribution throughout the building. The

switch (or switches) must be located to be easily accessible by building occupants. Providing such a capability will allow building occupants to limit the distribution of airborne contaminants that may be introduced into the building.

c. Utility distribution and installation: Utility systems can suffer significant damage when subjected to the shock of an explosion. Some of these utilities may be critical to safely evacuating personnel from the building or their destruction could cause damage that is disproportionate to other building damage resulting from an explosion. To minimize the possibility of the above hazards apply the following measures:

1) Utility routing. For all new buildings route critical or fragile utilities such that they are not on exterior walls.

d. Equipment bracing. Mount all overhead utilities and other fixtures to minimize the likelihood that they will fall and injure building occupants. Design all equipment mountings to resist forces of 0.5 times the equipment weight in any direction and 1.5 times the equipment weight in the downward direction. This standard does not preclude the need to design equipment mountings for forces required by other criteria such as seismic standards.

2.1.3 Mechanical Room Layout Requirements

The mechanical equipment room layouts shall be provided with ample floor space to accommodate routine maintenance of equipment and have head-room to accommodate required equipment. Ample space shall be provided around equipment to allow unobstructed access for entry, servicing, and routine maintenance. Space provided in rooms for service and/or replacement of filters, coils, motors, and other equipment items shall be indicated with broken (dashed) lines on the drawings. Provisions for installation, removal, and future replacement of equipment shall be coordinated with the architectural design. The as-built drawings shall be provided in accordance with Section 01040, AS-BUILT DRAWINGS. When Fire Protection risers and equipment is located in a mechanical equipment room, the dedicated fire protection space shall be indicated by a dashed line and noted "Fire Protection Space". The arrangement, selection, and sizing of all mechanical equipment shall be such that it can be broken down and removed from the building without dismantling any adjacent systems or structures. A 60 percent design submittal shall be provided for approval to verify mechanical room layout.

2.1.4 Mechanical/Electrical Equipment Coordination

Arrangement of all mechanical equipment and piping shall be coordinated with electrical work to prevent interference with electrical conduits that may run through the mechanical room and to insure adequate space in shared chases. Mechanical equipment (pipes, ducts, etc.) shall not be installed over or within space which is dedicated to transformers, panelboards, or other electrical equipment. When electrical equipment is located in a mechanical equipment room, the dedicated electrical space shall be indicated by a dashed line and noted "Electrical Equipment Space".

2.1.5 General Piping Requirements

As applicable, the following shall be provided for all new mechanical systems:

a. All piping and equipment located in finished areas of the building shall be concealed or furred-in; exposed piping and equipment is only allowed in utility, equipment, storage and other rooms of this nature.

b. Piping and supports shall not interfere with equipment maintenance access.

c. Dielectric unions shall be installed between dissimilar metals in soldered and threaded piping systems and insulated flanges shall be installed for welded systems.

d. All underground metallic lines, fittings, and valves; except for cast-iron soil and storm drain piping systems, shall be cathodically protected in accordance with Electrical Section paragraph entitled "Cathodic Protection".

e. All exterior, underground non-metallic piping shall be buried with pipe detection tape. See also, paragraph SERVICE LINE PROTECTION.

f. Water and natural gas service lines shall be metered where they enter the building. Water and natural gas meters shall be provided with pulse generators compatible with the EMCS system for monitoring water and gas usage.

g. All centrifugal pumps, regardless of service, shall be non-overloading allowing the pump to operate at any point in its characteristic curve.

h. Provide vent and drain valves with hose-end connections on all mechanical systems. Air vents shall be installed on all high points in piping systems. Drain valves shall be installed at low points and at equipment, which must be desmantled for servicing.

i. Pipe taps, suitable for use with either a 1/8 inch OD temperature or pressure probe, shall be located at each pressure gauge.

j. Provide isolation valves, balancing valve, flow measuring device, and pressure/temperature test plugs at all heating and/or cooling terminal units.

k. All coils shall be provided with valved drain and air vent connections.

l. On air handling units with multiple coils, isolation valves shall be installed on the supply piping and a balancing valve on the return piping of each coil. A thermometer shall be installed on the supply piping of each coil. Temperature/pressure taps shall be provided on the supply and return piping of each coil.

m. Strainers shall be provided with a valved blowdown connection and piped to a floor drain.

n. Provide bypass piping with isolation valve around all non-redundant control and regulating valves.

o. All pipe, ductwork, and equipment supports and hangers shall be coordinated with the roof design to avoid possible overloading of any of the structural elements.

2.1.6 Roof Mounted Equipment

Except for plumbing vents, supply and exhaust fans, and louvered intake or relief penthouses, mechanical equipment shall not be located on the roof of the facility.

2.1.7 Vibration Isolation/Equipment Pads

Provide vibration isolation devices on all new floor mounted or suspended mechanical equipment capable of 98 percent efficiency. All new floor mounted mechanical equipment shall be provided with 6 inch thick housekeeping pads which extend 6 inches all around equipment provided.

2.1.8 Permanent Maintenance Instrumentation

Provide sufficient instrumentation to aid maintenance personnel in balancing and/or troubleshooting mechanical systems. Instrumentation shall be provided in the media at each change in temperature and at all mixing points in air handling systems, at all discharges of air handlers, and at all return mains. Pressure gauges, thermometers, flow indicators, sight glasses, etc., shall be installed to be easily read from the adjacent floor. Thermometers shall have separable socket thermowells. Allow for the removal, repair, or cleaning of flow measuring devices without having to shut down the system. Provide a portable meter, with appropriate range, for each type of flow measuring device installed.

2.1.9 Temporary Control Instrumentation

Instrumentation shall be provided for the field calibration of all control and monitoring devices, and for the commissioning of the mechanical systems. Provide local indication measuring instrumentation for each of the HVAC control system components. Local instruments are to be independent of sensing devices used for the control system. The exceptions are air flow measuring stations, turbine flow meters, pitot tubes, and other flow measuring devices that may be shared as sensing devices by local indicating devices and control system devices and are required to be permanent. Local instruments are to be of industrial quality, must be certified as being factory calibrated, and must be capable of field calibration using standard procedures. Measuring provisions shall be provided at each varying input and control output in the system.

2.1.10 Color Coding Scheme for Locating Hidden Utility Components

To identify points of access for maintenance and operation of hidden utility components, a color coding scheme shall be provided for all areas of the facility where suspended grid ceilings are installed. Color coding scheme shall meet the requirements of Technical Specification 09900, PAINTING, GENERAL.

2.1.11 Utility Interruptions

Certain limitations on utility interruptions apply. Unauthorized utility interruptions will not be permitted. Any work that requires a utility interruption shall be scheduled in advance. Outages are subject to postponement or cancelation by site authorities without prior notification. Coordination requirements of utility interruptions shall be in accordance with SECTION 00800 SPECIAL CONTRACT REQUIREMENTS. All utility interruptions shall be identified with notes on the project drawings.

2.1.12 Power Outage Start-Up

Upon an electrical power outage, all air handling units and other major mechanical equipment will shut down and shall be restarted in a logical and efficient manner. Timing between starts and sequence of equipment starting upon restoration of electrical power shall be provided and programmed into the HVAC temperature control system, with programming capable of being changed by the operating personnel.

2.1.13 Spare Parts Lists

Recommended spare parts lists that require more than a 60 day lead time, and/or any special service tools shall be provided to the Government at the Final Inspection.

2.1.14 Equipment Room Diagrams

The following "As-Built" information, permanently mounted in a frame and covered by clear plexiglass, shall be provided in the mechanical equipment rooms:

a. Air distribution diagrams and damper schedules.

b. Hot water piping diagrams and valve schedules.

c. Chilled water piping diagrams and valve schedules.

d. Control diagrams, control device schedules, and sequences of operation.

2.1.15 Interior Design - Color Coordination

All mechanical items located in finished areas and on exterior walls, shall be coordinated with and painted to match the color scheme requirements of Technical Specification 09915, COLOR SCHEDULE.

2.2 EQUIPMENT IDENTIFICATION AND ABBREVIATIONS

This Section contains requirements for the identification and abbreviation of mechanical equipment.

2.2.1 Equipment Identification

Provide a brass name tag for each valve, temperature control device, control system device, etc., installed in all mechanical systems. In addition, all mechanical equipment shall be clearly identified with a conspicuously located, permanent label. Mechanical equipment shall be identified by type and sequence number. For example, the first air handling unit in the building shall be identified as AHU-1, the second air handling unit shall be AHU-2, etc.

2.2.2 Abbreviations

The following list of abbreviations shall be used to describe the HVAC equipment types:

Air Handling Unit . . . . . AHU

BoiLeR . . . . . BLR

Cabinet Unit Heater . . . . . CUH

Chilled Water Pump . . . . . CWP

Control Valve CV

Domestic Water Heater . . . . . DWH

Exhaust Fan . . . . . EF

Expansion Tank . . . . . ET

Fan Coil Unit . . . . . FCU

Filter Bank . . . . . FB

Fin Tube Radiation . . . . . FTR

Gov't Furnished Contractor Installed . . GFCI

Gov't Furnished Gov't Installed . . . . GFGI

Heating Ventilating Unit . . . . . HVU

Hot Water Pump . . . . . HWP

Horizontal Unit Heater . . . . . HUH

Tube Radiant Heater . . . . . TRH

Local Control Panel . . . . . LCP

Motor Operated Damper . . . . . MOD

Make-up Air Unit . . . . . MAU

Not In Contract . . . . . NIC

ReHeat Coil . . . . . RHC

Relief Hood .. . . . . RH

Supply Fan. . . . . .SF

Transfer Fan . . . . . TF

Vertical Unit Heater . . . . . VUH

2.3 IDENTIFICATION OF PIPING

All exposed and concealed piping in accessible spaces shall be identified with color coded bands and titles in accordance with the requirements of Technical Specification 09900 PAINTS AND COATINGS.

2.4 PROTECTION FOR MECHANICAL PIPING AND EQUIPMENT

This Section contains instructions and engineering requirements relating to the protection design of new mechanical piping, ductwork, and equipment. This Section contains instructions and engineering requirements relating to the protection design of new mechanical piping, ductwork, and equipment. Structural bracing and mounting of mechanical equipment shall be designed in accordance with Technical Specification 13080 SEISMIC PROTECTION FOR MISCELLANEOUS EQUIPMENT. In addition see Anti-terrorism & Force Protection requirements for additional requirements.

a. The facility shall be designed in accordance with Technical Specification 13080 SEISMIC PROTECTION FOR MISCELLANEOUS EQUIPMENT.

b. The mechanical design for the facility shall meet the requirements of Technical Specification 15070A SEISMIC PROTECTION FOR MECHANICAL EQUIPMENT.

2.4.1 Piping

Piping within the facility, except fire protection piping, is required to have restraints. All water pipes for fire protection systems shall be designed under the provisions of the current issue of the "Standard for the Installation of Sprinkler Systems" of the National Fire Protection Association NFPA 13, see Section 01008 FIRE PROTECTION REQUIREMENTS.

2.4.2 Ductwork

Ductwork within the facility is required to have restraints.

2.4.3 Floor Mounted or Suspended Equipment

See Specification 13080A SEISMIC PROTECTION FOR MISCELLANEOUS EQUIPMENT for requirements in securing floor mounted and suspended equipment within the facility.

2.4.4 Miscellaneous Equipment

Miscellaneous items which consist of a number of individual components built into an assembly by the manufacturers may require additional internal reinforcements to meet Specification 13080 SEISMIC PROTECTION FOR MISCELLANEOUS EQUIPMENT.

2.5 THERMAL INSULATION OF MECHANICAL SYSTEMS

Insulation requirements of new mechanical systems, including insulation of plumbing systems and equipment, domestic hot water supply and recirculating piping systems, and the insulation of the duct systems shall meet the requirements of Technical Specification 15080 THERMAL INSULATION FOR MECHANICAL SYSTEMS. Domestic hot and cold water piping shall be insulated. All ducts shall be insulated in the mechanical rooms and all supply ducts shall be insulated. Cold piping shall have a vapor barrier. High abuse areas shall have aluminum jacket such as janitor closets and mechanical rooms.

2.5.1 Insulation Covers

Provide reusable insulation covers at all check valves, control valves, strainers, filters, or any other piping component requiring access for routine maintenance. Insulation exposed to the weather or possible physical damage shall be covered by an aluminum metal jacket. All piping

with metal jacket shall be identified on the drawings.

2.6 PLUMBING SYSTEM

This Section contains instructions and engineering requirements relating to the design of the new plumbing systems as required. A plumbing system consists of the domestic hot and cold water supply distribution system to the various plumbing fixtures with isolation valves; fixtures, and fixture traps; soil, waste, and vent piping; and shall extend from connections within the structure to a point 5 feet outside the structure. The design of all plumbing systems shall, unless otherwise stated herein, comply with the most current Uniform Plumbing Code and shall meet the requirements of Technical Specification 15400A PLUMBING, GENERAL PURPOSE. Traps for lavatories, and sinks shall be chromium-plated, adjustable-bent tube, 20-gauge brass, where exposed and no cleanouts. All backflow preventers shall be installed for accessibility per guide specification and shall comply with the requirements of the Department of Environmental Quality (DEQ) of the State of Colorado. State licensed plumbers shall install and/or test backflow preventors and cross connections devices. For Fire Protection backflow preventor requirements see Section 01008 FIRE PROTECTION REQUIREMENTS. Lead content in the water distribution system (including in-line devices) shall comply with SDWA of 1998 with amendments and ANSI/NSF 61, section 8. In-line devices shall include water meters, building valves, check valves, meter stops, valves and fittings and backflow preventors. Soil piping does not require any cathodic protection. Provide sleeves through slab-on-grade floors.

2.6.1 Water Service Entrances

New water service entrance lines shall be installed below the recognized frost line and enter the buildings through the mechanical room floors. New water service entrances shall be provided with a positive displacement type water meter up to and including 2 inch and a turbine type water meter for greater than 2 inch, a pressure reducing valve and a reduced pressure principal backflow preventer with isolation valves located inside the building. Meters shall be provided with a direct non-resettable, digital readout. Meters shall have a pulse switch initiator pulse output capable of operating up to speeds of 500 pulses per minute with no false pulses and shall require no field adjustments or 4-20 mA output. Initiators shall provide the maximum number of pulses up to 500 per minute that is obtainable from the manufacturer. Meters shall be connected to the EMCS system. Meter is required in accordance with Air Force ETL 94-2.

2.6.2 Piping Runs

Piping runs in buildings shall be arranged to not interfere with movement of personnel and equipment. Neither water nor drainage piping shall be located over electrical equipment or panels. Domestic water piping located outside of mechanical equipment areas shall be routed in the ceiling space above the corridors. Water and waste piping shall not be located in exterior walls or other spaces where there is danger of freezing except for wall hydrants. Where piping is to be concealed in wall spaces or pipe chases, such spaces shall be checked to insure that clearances are adequate to properly accommodate the piping. Water piping shall be designed not to exceed a velocity of 6.0 fps at full flow.

2.6.3 Pipe Materials

Table I in Technical Specification 15400A PLUMBING, GENERAL PURPOSE

identifies available material alternatives for above/below ground soil, waste, and vent. Materials for domestic hot, hot water recirculating and cold water distribution systems shall be copper. All piping 2 inch and smaller shall be soldered using 95/5 tin antimony solder, piping 2-1/2 inches and larger shall be brazed. Multi-flame torch is not required for soldering or brazing. The Tables shall be edited to indicate which materials shall be used for installation of each system.

2.6.4 Protection of Water Supplies

Cross connections between water supply piping and waste, drain, vent, or sewer piping are prohibited. Reduced pressure type backflow preventers shall be provided on the domestic water service to the building and on the landscape irrigation system.

2.6.5 Fixtures

Plumbing fixtures shall conform to ASME standards and Executive Order 12902 with lead-free faucets. End-point devices shall meet lead leaching requirements of ANSI/NSF 61, section 9, ie. lavatory faucets, kitchen faucets, supply stops and end point control valves). In-line devices do not have to meet section 9 (i.e., all drains, backflow preventors). Work shall consist of but not be limited to the following. Coordinate location with the architectural plans.

a. Electric water cooler located near rest room entrance.

b. Floor-mounted Janitor sink in Janitor's closets.

c. Waterless urinals shall not be allowed.

d. Water conservation fixtures (low flow type) with mechanical automatic metering devices conforming to the Technical Specification 15400A shall be provided in all restrooms. Electronic sensor solenoid operated valves shall be used on lavatories only.

e. All showers shall be provided with spray heads that are height adjustable.

2.6.6 Janitors Closet Mop Sinks

A molded stone floor mounted type service sink shall be provided in all janitor closets. Overall sink dimensions shall be approximately 24 inch x 24 inch. The depth of the floor sink bowl shall be approximately 10 inch. Provide sink faucet with hose connection, hose, and hose bracket, mop bracket, and wallguard.

2.6.7 Breakrooms

Each of the Breakrooms shall be provided with a 1/2" domestic cold water line to be hard connected to an automatic coffee maker. Each of the Breakrooms shall be provided with residential type garbage disposals. The Breakroom on second floor shall be provided with a residential type automatic dishwasher. The dishwashing cycle shall be performed using 140 °F water. The 140 °F water may be supplied directly to the dishwasher, or the dishwasher may be provided with an integral booster heater to internally heat the water to 140 °F.

2.6.8 Electric Water Coolers

Bi-level, accessible or barrier-free, mechanically refrigerated electric water coolers shall be located near restrooms. Bottom spout unit shall be 28 inches above finished floor. Upper spout shall be 34 inches above finished floor. The push bar shall be front or front and side mounted. Single mechanically refrigerated electric water coolers shall not be permitted. Cooler shall be lead-free and use CFC-free refrigerant R-134a. Unit shall provide a minimum of 8 gph at 50°F. Coolers shall be certified to meet ANSI/NSF 61, Section 9 and meet lead leaching requirements of section 9.

2.6.9 Water Hammer Arresters

Commercially available water hammer arresters shall be provided at all new quick closing valves such as solenoid valves and will be installed according to manufacturers recommendations. Vertical capped pipe columns are not permitted.

2.6.10 Wall Hydrants

Exterior freeze-proof wall hydrants with vacuum-breaker backflow-preventer shall be located on outside walls at 100 feet intervals of the facility. A wall hydrant shall be provided near all Mechanical Room exterior doors. Exterior wall hydrants shall be mounted 36 inches above finished grade.

2.6.11 Wall Faucets

An interior wall faucet shall be provided in all Mechanical Rooms. Wall faucets shall be mounted 36 inches above the finished floor.

2.6.12 Lawn Irrigation

An automatic lawn sprinkler irrigation system shall be provided. Design requirements for the sprinkler irrigation system is defined in the Section 01002 Site Work. A reduced pressure principal backflow preventer with isolation valves shall be provided in the supply line to each lawn irrigation system in order to protect the domestic water system in the building from the lawn irrigation system. Piping within 5-feet of the building shall be in accordance with Guide Specification 15400A.

2.6.13 Not Used

2.6.14 Service Stop Isolation Valves

For normal maintenance or replacement, servicing stop isolation valves shall be installed in water connections to all installed new equipment and new fixtures. In addition, stop valves shall be provided to isolate portions of systems so as to not require shutdown of entire systems. Stop isolation valves for piping and equipment shall be shown on the drawings. Service stop isolation valves to faucets shall meet ANSI/NSF 61, section 9 lead leaching requirements.

2.6.15 Floor Drains

A floor drain shall be provided in all mechanical rooms, toilet rooms, janitors closets, and all outside entries with a recessed floor mat. To prevent traps from drying out, deep seal traps shall be provided on all floor drains located in areas other than mechanical rooms.

2.6.16 Cleanouts

On straight runs of pipe, cleanouts shall be provided at not more than 50 feet apart. Cleanouts shall be provided at each change of direction of pipe and shall be provided at the base of all storm, soil, waste, and vent stacks.

2.6.17 Plumbing Vents

Where feasible, combine circuit vents in a concealed space to a main vent through the roof in lieu of an excessive number of individual vents through the roof. All vent lines through roof shall be 4 inch and terminate a minimum of 6 inches above finished roof. Where vents connect to horizontal soil or waste lines, the vent shall be taken off so that the invert of the vent pipe is at or above the centerline of the horizontal soil or waste pipe.

2.6.18 Duct Drainage

Outside air intake louvers and louvered penthouses shall be ducted and shall have provisions to dispose of melted snow and wind-blown rain which enters through the louvers. The duct seams shall be sealed watertight (soldering or brazing is not required) and a drain provided at the duct low point. The drain shall be routed to a floor drain. Duct access doors shall be provided near the louvers.

2.6.19 Domestic Hot-Water

Domestic water heaters shall be located in the mechanical room and adequately sized to deliver 140°F water. Heaters shall be gas fired with a combined water storage tank. The capacity of the water heaters shall be adequate to meet the peak hot water requirements of the facility and shall be designed in accordance with Chapter 48, Service Water Heating, of the 1999 ASHRAE HVAC Applications Manual. An inlet water temperature of 39.2°F shall be used for sizing the water heater. Minimum efficiency shall be 80 percent for gas-fired type. Water storage temperature shall be minimum 131°F to prevent bacterial growth within the tank. Provide 110°F hot water at fixtures by using mixing valves.

2.6.19.1 Domestic Hot Water Re-circulation System

Domestic hot water recirculating pumps shall be provided for each water heater. Pump sizing shall be in accordance with simplified pump sizing method 1995 ASHRAE Applications Manual unless specific conditions warrant the need for more detailed calculations. The system shall continually circulate domestic hot water in order to insure that domestic hot water is available at each fixture without delay. The domestic hot water recirculating pumps shall be all bronze for long life. A clock or other automatic control will be installed on domestic hot water circulation pumps to permit operation only during periods of occupancy plus 30 minutes prior. An aquastat shall be installed to limit pump operation to periods when recirculation is required to maintain temperature of water in pipes.

2.6.20 Storm Drain System

Where required by the architectural drawings, roof drains, with auxiliary overflow drains, shall be provided at the low points of the roof. Storm water shall be routed through interior piping and routed directly to the facility storm system where required. Roof drains shall be designed for a

maximum rainfall rate of a 100-year return with a 15-minute duration per National Standard Plumbing Code and shall be sized in accordance with the National Standard Plumbing Code. All elbows for the storm drainage and overflow drainage piping 10 inches and smaller shall have 90 degree short sweep elbows.

2.6.21 Cathodic Protection

Cathodic protection shall be provided for any new underground metallic piping, fittings, and valves except cast iron soil pipe. Design of cathodic protection system shall in accordance with Section 01007 ELECTRICAL REQUIREMENTS, paragraph entitled "Cathodic Protection".

2.7 EXTERIOR GAS DISTRIBUTION SYSTEMS

This Section contains instructions and engineering requirements relating to the design of the new exterior natural gas distribution system where required, including the building gas service lines and gas service regulator assemblies. The gas distribution systems shall be designed in accordance with NFPA-54, and shall meet the requirements of Technical Specification 02556A GAS DISTRIBUTION.

2.7.1 Service Lines

A new service line shall be provided. The point of connection shall be provided with a shutoff plug valve, conveniently located outside of any traffic area and protected with a valve box.

a. This may necessitate a **base-wide shutdown** of the gas system. Coordinate shutdown with base. (See Paragraph 1.2.12, Utility Interruptions.)

b. Tap into the existing line shall be a "hot tap" and the Base Fire Department shall be given 30 days advance notification of the date of the tap (see minimum service line sizing paragraph Service Line Sizing).

c. Service lines shall not be installed under or routed thru the facility. Except for piping located at the new gas meter/service regulator assemblies, no aboveground gas piping shall be exposed to view. The service line shall enter the buildings in an accessible location outside the mechanical room areas. The gas meter/service regulator assemblies shall be hidden from view to the greatest extent possible.

d. Service lines to buildings shall run parallel and/or perpendicular to the building lines, shall be buried at least 18 inch below the ground surface, shall not be laid in the same trench with other utilities, and shall be above other utilities whenever they cross. New gas lines shall not be laid under paved streets, parking lots, roads or in other locations subject to heavy traffic whenever practicably avoidable and economically feasible to locate elsewhere. Whenever it is necessary to locate gas lines in such locations, the lines shall be protected by suitable encasement or by burying to a depth to provide at least 5 feet of cover over the top of the pipe except that new gas lines shall be provided with encasement when laid under new or existing paved streets, and new parking lots.

e. All manholes, or valve boxes, of any nature within the project that do not conform to the new finish grade in either surfaced or unsurfaced

areas shall be adjusted to the new finish grade. Where manholes, or valve boxes fall within a surfaced or unpaved roadway or parking, the existing frames and cover shall be removed and replaced with a heavy-duty frame and cover. The structure shall be adjusted as needed to fit the new conditions. All structures shall be of a type suitable for the intended use and shall conform to the requirements of the applicable section of these specifications

2.7.2 Service Line Sizing

The size of the service lines shall be sufficient to supply the demand without excessive pressure drop greater than 10 percent and shall not be less than 1 inch in size.

2.7.3 Service Line Materials

All new underground service lines shall be polyethylene and all aboveground lines steel.

2.7.4 Service Line Markers

New underground service lines shall be identified by a permanent on grade utilities marker which indicates the type of service and depth of burial. Markers shall be located a maximum of 100 feet apart on straight runs and at every change in direction. Markers in high traffic areas shall be protected from physical damage. Markers shall consist of a stamped or engraved brass name plate embedded in concrete. Tracer wire shall be 18 gauge AWWG copper secured to piping at not more than 3 foot intervals.

2.7.5 Service Line Protection

New below grade lines shall be protected from physical damage by placing a continuous, detectable plastic ribbon in the trench such that any excavation will uncover the ribbon prior to reaching the line. When non-ferrous service lines are installed, a foil backed magnetic tape shall be installed above the pipe to permit locating with a metal detector.

2.7.6 Cathodic Protection

Cathodic protection shall be provided for any underground metallic piping and fittings required for the transition between the underground pipe and the aboveground metallic pipe. Design of cathodic protection system shall in accordance with Section 01007 ELECTRICAL REQUIREMENTS, paragraph entitled "Cathodic Protection".

2.7.7 Gas Meters

A new gas meter shall be provided as part of the new service regulator assembly. Meters shall be provided with a direct non-resettable, digital readout. Meters shall have a pulse switch initiator capable pulse output of operating up to speeds of 500 pulses per minute with no false pulses and shall require no field adjustments or 4-20 mA output. Initiators shall provide the maximum number of pulses up to 500 per minute that is obtainable from the manufacturer. It shall provide not less than one pulse per 100 cubic feet of gas. Meters shall be connected to EMCS. Meter is required in accordance with Air Force ETL 94-2.

2.8 INTERIOR GAS PIPING SYSTEMS

This Section contains instructions and engineering requirements relating to the design of new interior natural gas piping systems. Interior gas piping systems shall extend from the outlet of the gas service regulator/meter assembly to the point of connection of each gas utilization device. The aboveground gas piping system shall be steel designed in accordance with NFPA 54 and shall meet the requirements of Technical Specification 15190A GAS PIPING.

2.8.1 Gas Piping

Piping shall be sized in accordance with NFPA 54 to supply the demand without excessive pressure drop between the point of delivery and the gas utilization equipment. Minimum interior gas pipe size shall be 3/4 inch. The calorific value of the natural gas to be used in calculations for sizing equipment and piping is 840 Btu/cubic foot. Gas piping shall be shown on the mechanical HVAC Drawings.

2.8.2 Equipment Connections

The final connection to gas equipment shall be made with rigid metallic pipe and fittings. Accessible gas shutoff valve and coupling are required for each piece of gas equipment.

2.9 GAS FIRED HEATING SYSTEMS

Gas fired heating systems shall comply with 15565 HEATING SYTEM; GAS-FIRED HEATERS.

2.10 HYDRONIC HEATING SYSTEMS

Hydronic heating system shall be a forced-air/hot water system consisting of natural gas fired boilers, water distribution system, circulating pumps, and associated heating equipment. Heating media shall be a solution of 35 percent propylene glycol and 65 perecnt water (by volume). The heating system shall be capable of providing heat for the building air ventilation systems. The heating water piping system shall be used to circulate hot water to the heating equipment during the heating season. Piping shall utilize reverse-return configuration. The heating system designs shall meet the requirements of Technical Specification 15569 WATER AND STEAM HEATING; OIL, GAS OR BOTH; UP TO 20 MBTUH and, unless otherwise stated, shall comply with the American Society of Heating, Refrigerating, and Air Conditioning Engineers (ASHRAE) Handbooks and Terminology of HVAC&R guide. The heating system design shall include safeguards to protect against freezing damage. Hot water pipe velocities shall be sized to not exceed 5 feet per second .

2.10.1 Boilers

The hot water supply shall be heated to 200 degrees F. (93.3 degrees C.) and supplied by natural gas-fired, cast iron, fire-tube or water-tube type boilers rated for a pressure of 30 psig (207 kPa). (NOTE: If multiple boilers are utilized, the total boiler capacity shall add up to 100% of the total heating load) Unless noted otherwise, each boiler shall be provided with modulating, forced-draft burners and shall be interlocked with the hot water pumps' flow sensors to provide a continuous flow of hot water to the facility at outdoor temperatures below 60 degrees F. (15.6 degrees C.) (adjustable). The hot water system supply temperature to the space shall be automatically controlled by manufacturer's standard controls. The

boilers shall be interlocked with the heating water circulating pumps, through the control system, such that the boilers' burner can not fire unless flow is present through the boiler's piping system. The boilers shall have a minimum efficiency of 80 percent. The use of a natural draft boilers shall be allowed if the minimum efficiency of 80 percent can be met at the site elevation. The entire building hot water system, including all piping, equipment, and appurtenances, shall be filled with a solution of 35 percent propylene glycol and 65 percent water (by volume). This solution shall be added after all pressure testing and cleaning of piping systems has been satisfactorily completed and prior to testing and balancing of the systems. Required flow rate and head loss shall be corrected for glycol. This corrected flow rate shall be used in selecting all other heating equipment, i.e. heating coils.

2.10.1.1 Boiler Connections

Design of boiler connections and auxiliary equipment shall conform to the requirements of ASME Boiler Code.

2.10.1.2 Low-Water Cutoffs

Float-type safety water feeders with low water cutoffs shall be provided for the hot-water boilers.

2.10.1.3 Water Column Connections

Provide crosses at right-angle turns on water column connections to boiler.

2.10.1.4 Smoke Connection

Boiler flue stack connections shall be in accordance with NFPA 211. Also, see paragraph Vents and Stacks.

2.10.1.5 Boiler Flue Termination

The boiler flue shall extend up through the roof of the building. The flue shall be provided with a rain cap fitting.

2.10.1.6 Boiler Location

The boilers and all associated fuel burning equipment shall be located in mechanical room .

2.10.2 Heating Water Distribution Pumps

The heating water shall be circulated by two parallel base mounted, end-suction, centrifugal pumps with mechanical seals. Each pump shall be sized for 50 percent of the maximum required heating water flow and 100 percent of the maximum system head pressure. The pumps capacity shall be based on a 200 degrees F. (93.3 degree C.) supply and 180 degrees F. (82.2 degree C.) return water. The pumps shall be non-overloading allowing the pump to operate at any point on its characteristic curve. Each pump shall be provided with a suction diffuser and shall be mounted on a 6-inch (150 mm) thick concrete housekeeping pad. Each pump shall be provided with a calibrated bronze balancing valve, check valve and shut-off valves. Pump flow rate (and head loss) shall be corrected for glycol. This corrected flow rate shall be used in selecting all other equipment ie. coils.

2.10.3 Expansion Tanks

A floor mounted bladder type expansion tank shall be provided in the heating hot water piping systems. The expansion tank's precharge pressure and acceptance volume shall be selected based on the design of the piping systems. The STRUCTURAL DESIGN ENGINNER shall be thoroughly consulted before hanging the tank from the structure.

2.10.4 Air Separation Tanks

The heating hot water piping systems shall be provided with an air separation tank. The air separator shall include an automatic air vent and make-up water system, consisting of a pressure reducing valve, strainer, reduced pressure type backflow preventer and isolation valves.

2.10.5 Water Treatment Systems

Provide a mixture of 35% propylene glycol and 65% water into the heating systems. Provide a shot feeder (chemical feeder) at the heating water distribution pumps to allow introduction of chemicals into the system. Provide the chemical treatment necessary to protect the heating system's equipment from damage due to corrosion and freezing. The water treatment system shall be capable of feeding chemicals and bleeding the system to prevent corrosion and scale within the boiler(s) and piping distribution system. The water shall be treated to maintain the conditions recommended by the boiler manufacturer. Chemicals shall meet required federal, state, and local environmental regulations for the treatment of boilers and discharge to the sanitary sewer. The services of a company regularly engaged in the treatment of boilers shall be used to determine the correct chemicals and concentrations required for water treatment. The company shall maintain the chemical treatment and provide all chemicals required for a period of 1 year from the date of occupancy. Filming amines and propreitary chemicals shall not be used. The water treatment chemicals shall remain stable throughout the operating temperature range of the system and shall be compatible with pump seals and other elements of the system.

2.10.6 Air handling Unit Coils

a. Each air handling unit coil shall be provided with a three-way control valve.

b. Leaving air temperatures for heating coils (except for preheat) shall be between 100 to 105 degrees F. (38 to 41 degrees C.).

c. Coils shall be selected with no more than 500 fpm (3 m/s) coil face velocity.

2.10.7 Variable Air Volume Box Reheat Coils

Each VAV Box shall be provided with a two or three-way control valve. Leaving air temperatures for reheat coils shall be a minimum of 104 deg rees F. (40 degrees C.) at 40% of maximum air flow rate. Each VAV box shall be provided with a volume damper which allows only 40% of the maximum cooling air flow rate - when the box is in the reheat mode.

2.10.8 Piping

All piping shall be pitched up in the direction of flow, (1 inch in 40 feet) (25.4 mm in 12 meters) shall be designed without pockets which would permit accumulation of air, and shall be provided with vents at high points and drains at low points.

2.10.8.1 Pipe Materials

All new heating water piping within the facility shall be black steel conforming to ASTM A53, Schedule 40 or copper.

2.10.8.2 Pipe Joints

Heating water pipe joints shall be of the following types:

a. Heating water piping installed within the facility shall utilize threaded joints or welded joints. Welded joints and fittings shall be used for joints 2-1/2 inch (65 mm) and larger. Copper pipe joints 2 1/2 inch (65 mm) and larger shall be brazed. Grooved mechanical joints shall not be used.

b. Connections to equipment shall utilize unions for pipe 2-inch (50 mm) and smaller and flanges for pipe 2-1/2 inch (65 mm) and larger.

2.10.8.3 Pipe Expansion

In runs of pipe 50 feet (15 meters) and longer, or in shorter runs where design deems it necessary, indicate size on project drawings the location of all anchors, bends, loops, and pipe guides to adequately limit and provide for pipe expansion. Do not use expansion joints in piping unless absolutely necessary and justified. Anchors and guides shall be indicated on the project drawings and detailed for installation in the building structure provided. The STRUCTURAL DESIGN ENGINEER shall be thoroughly in formed of all forces generated.

2.10.9 Vents and Stacks

Stacks shall be in accordance with NFPA 211. Generally all stacks shall be of the prefabricated type with individual stack provided for each appliance. Stacks are generally used for forced draft applications. Vents shall conform to UL 441 and be Type B. Vents are generally used for atmospheric burners only. Vents can be tied together to a main vent. Combined stacks shall not be used for appliances with power burners or draft fans. Stacks and vents can not be tied together. Height of stacks and vents shall be as required by NFPA 54 and shall be provided with a rain cap.

2.10.10 Heating of Mechanical Equipment Rooms

The mechanical equipment rooms shall be provided with thermostatically controlled, hot-water, horizontal throw unit heaters to maintain the required space temperature. The unit heater airflow shall be directed toward the combustion air intake(s) in order to warm the combustion air.

2.10.11 Combustion Air

The mechanical equipment room shall be provided with combustion air louvers sized and located in accordance with NFPA 54. The combustion air louvers shall be provided without dampers and shall be ducted to within 12 inches (300 mm) of the mechanical room roof (in order to minimize the potential

for piping freeze-up in the mechanical room due to combustion air intake).

2.10.12 Fintube

If fintube radiation is to be utilized, indicate on the drawings the mounting height from bottom of radiator coveer to floor. Height shall be coordinated with installation of electrical outlets to prevent any interferences. Where necessary to clear electrical receptacles, fintube radiators shall be installed with the bottom of the radiator cover 16 inches above the floor, space permitting. Space allocation shall be carefully coordinated with architectural design where radiation is installed in toilet rooms. In administrative buildings, hot water fintube radiators shall be provided with individual room temperature control and shall be equipped with solid front, slotted, sloping top covers.

2.10.13 Not Used

2.10.14 Unit Heaters

Thermostatically controlled, hot water unit heaters are permitted in mechanical rooms, electrical rooms, and storage areas. Unit heaters shall cycle on and off to maintain setpoint. Suspended ceiling cabinet unit heaters shall be provided near all Admin. area exits, with wall mounted thermostats located 60" above finished floor.

2.11 ELECTRIC RESISTANCE HEATING

The use of electric resistance heating is <u>not permitted</u>.

2.12 CHILLED WATER SYSTEMS

These systems shall meet the requirements of Technical Specification 15650 CENTRAL REFRIGERATATED AIR-CONDITIONING SYSTEM and unless otherwise stated, shall comply with the American Society of Heating, Refrigerating, and Air Conditioning Engineers (ASHRAE) Handbooks and ASHRAE 15.

a. Each air handling unit coil shall be provided with a three-way control valve.
b. Coils shall be selected with no more than 500 FPM (3 m/s) coil face velocity.

2.12.1 Refrigeration System.

The refrigeration system shall be a package chiller unit mounted on an exterior 6-inch (150 mm) thick pad. Unit shall have a minimum EER = 10.0. Chilled fluid shall be a mixture of 35% propylene glycol and 65% water. Unit shall be provided with manufacturer's standard packaged controls. The unit shall be provided with at least four steps of capacity reduction. Refrigeration equipment provided shall have an ozone depletion factor of 0.05 or less. HCFC-22 <u>shall not</u> be allowed. HCFC-22 alternatives shall be documented in the design analysis and catalog cuts provided for three manufacturer's before an alternate refrigerant equipment will be allowed.

2.12.2 Chilled Water System Design.

Air conditioning shall be designed with chilled water/glycol as the cooling media. The pumping, piping, and hydronic ancillaries scheme shall be designed to include components described for the HYDRONIC HEATING SYSTEM that are applicable, such as, air separators, expansion tanks, pumps,

piping, water treatment, air handling unit coils, etc. unless specified otherwise hereinafter. The design shall include safeguards to protect against freezing damage. Piping shall utilize a reverse-return configuration. The entire building chilled water system, including all piping, equipment, and appurtenances, shall be filled with a solution of 35 percent propylene glycol and 65 perecnt water (by volume). This solution shall be added after all pressure testing and cleaning of piping systems has been satisfactorily completed and prior to testing and balancing of the systems. Required flow rate and head loss shall be corrected for glycol. This corrected flow rate shall be used in selecting all other cooling equimpment, i.e. cooling coils.

2.12.3 Other Systems

The use of evaporative cooling, heat pumps and direct expansion (DX) coil type systems will not be permitted.

2.12.4 Chilled Water Distribution Pumps

The cooling water (glycol/water solution) shall be circulated by two base mounted, end-suction, centrifugal pumps with mechanical seals. Each pump shall be sized for 50 percent of the maximum required cooling water flow and 100 percent of the maximum system head pressure. The pumps capacity shall be based on a 55 degrees F. (12.8 degree C.) return and 45 degrees F. (7.2 degree C.) supply water. The pumps shall be non-overloading allowing the pump to operate at any point on its characteristic curve. Each pump shall be provided with a suction diffuser and mounted on a 6-inch (150 mm) thick concrete housekeeping pad. Each pump shall be provided with a calibrated bronze balancing valve, check valve and shut-off valves. Pumps shall run at temperature above 65 degrees F. (18.3 degree C.) (adjustable). Pump flow rate (and head loss) shall be corrected for glycol solution. This corrected flow rate shall be used in selecting all other equipment i.e. coils.

2.13 AIR SUPPLY AND DISTRIBUTION, AND VENTILATION AND EXHAUST SYSTEMS

This Section contains instructions and engineering requirements relating to the design of the new HVAC supply and distribution systems. The design of all systems shall comply with the American Society of Heating, Refrigerating, and Air Conditioning Engineers (ASHRAE) Handbooks, to the requirements of NFPA Standards Nos. 90A and shall meet the requirements of Technical Specifications 15895A AIR SUPPLY, DISTRIBUTION, VENTILATION, AND EXHAUST SYSTEMS. Mechanical ventilation and ventilation requirements for occupants shall provide the minimum outdoor air supply rates for occupants in heated or air-conditioned facilities, or both, required by ASHRAE Ventilation Standard 62.

a. Air distribution systems shall be designed to prevent infiltration at the anticipated prevailing wind.

b. Equipment capacities and flows shall be corrected for altitude on drawings (schedules).

c. Noise Criteria unless otherwise indicated is as follows:

d. Noise and Room Criteria (see ASHRAE 1999 APPLICATIONS) unless otherwise indicated is as follows:

1) Mechanical Equipment rooms = 60 NC (max)

2) Administrative/Office areas = 35 RC(N)(max)
3) Lobby/Toilets/Corridors = 45 RC(N)(max)
4) Private Offices = 35 RC(N)

2.13.1 System Designs

All spaces in the facility except for janitor closets and interior storage shall be heated and cooled by mechanical ventilation or air-conditioning as indicated.

a. Vestibules, stairs, etc, shall be heated for freeze protection of sprinklers only (or Mechanical design shall be coordinated with the Fire Sprinkler Installation for freeze protection).

b. Ventilation in restrooms, storage, and janitors shall be for odor exhaust only and shall be interlocked with AHU relief dampers. Building shall be maintained at a positive pressure when operating. Excess outside air shall first be relieved through areas generating odors (such as toilet rooms) then through relief louvers.

c. Unheated or air conditioned closets and storage areas in air-conditioned facilities shall be provided either directly with air conditioned air or provided with exhaust to transfer conditioned air to adjacent spaces.

d. Suspended air handling units, and heating and ventilating units not located in mechanical rooms shall be on platforms or catwalks with perimeter railings for maintenance access. Railings shall be in accordance with OSHA requirements.

2.13.2 Air Handling Units

2.13.2.1 AHU Systems in Administration area, Men's & Women's Toilet Rooms, etc.

Air Handling units shall meet the requirements of Technical Specifications 15895A AIR SUPPLY, DISTRIBUTION, VENTILATION, AND EXHAUST SYSTEMS..

2.13.3 Filtration

Indoor air quality is of primary concern. The combined supply air, including return and outside air, shall be filtered by 30 percent efficient filter as determined by the dust spot test specified in ASHRAE Standard 52.1 and particulate removal efficiency in ASHRAE Standard 52.2.

2.13.4 Ductwork

a. All duct shall be low pressure and built to low pressure and Class C seal requirements. Offices with common exposures or functions shall be zoned together. All ductwork shall be sized using the equal friction method with 0.07 inches of water column per 100 feet for supply and return ducts and 0.1 inches of water column per 100 feet for exhaust ducts. Constant Volume duct velocity shall never exceed 1,400 fpm. Ductwork shall be metal except for fan connections. Ductwork shall typically be run above the ceiling. There shall be 15 feet of return air duct to an air handling unit provided with acoustical liner. This is the minimum amount of return air duct that will be accepted for each air handling unit. Flexible ductwork shall never exceed 6 feet in

length. Duct Construction; all ductwork shall be constructed from galvanized sheetmetal, in accordance with SMACNA Guidelines.

b. Penetrations for ductwork serving the "Future SCIF" shall be kept to a minimum. Only ductwork serving the "Future SCIF" shall be located in the ceiling space of this area. No ductwork serving other areas shall be routed through the ceiling space of the "Future SCIF" area. Ductwork serving this area shall be designed and installed to easily accommodate future modifications to that ductwork to allow conformance to DCID 1/21. Ductwork serving the "Future SCIF" shall be designed and installed such that the sound attenuators required by DCID 1/21 will be provided with adequate space to allow hanging from the structure above.

2.13.5 Ceiling Mounted Supply Diffusers

Ceiling diffusers shall be suitable for use in a lay-in ceiling or a gypsum board ceiling and shall be located as necessary. All new diffusers shall be provided with a 4-way adjustable discharge pattern; standard diffusers with fixed discharge patterns are not permitted. Diffusers shall be sized to distribute the required quantity of air evenly over the space intended without causing noticeable drafts, air movement faster than 50 fpm in the occupied zone, or causing dead spots anywhere in the conditioned space. Maximum velocity of 500 fpm with a NC of 30 maximum. Diffusers in lay-in ceilings shall have 24 inch x 24 inch panels.

2.13.6 Ceiling Mounted Return Grilles

Ceiling return air grilles, suitable for use in lay-in ceilings or gypsum board ceilings, shall be located as necessary. The maximum size of new return grilles shall be 24 inch x 24 inch, minimum size shall be 24 inch x 12 inch. Return grilles shall not be located close to outdoor openings or in locations where bypassing of supply air may occur. Recommended return air velocities based on free area of the opening shall be 500 fpm.

2.13.7 Supply and Exhaust Fans

All fans shall be centrifugal type and connected directly to weather-proof louvers using ductwork. Low leakage motorized dampers shall be provided. Fans larger than 2000 cfm in capacity shall be provided with V-belt drives. Care shall be taken to ensure that the noise level generated by exhaust fans and associated relief louvers is not transmitted to the exterior of the building. In-line fans located outside the main mechanical and electrical areas shall be the provided with a manufacturers standard acoustical enclosure to inhibit noise transmission to the adjoining occupied spaces. Sone value of fans measured 5 feet from fan inlet shall be less than 30 sones outside the mechanical equipment room. Direct drive fans shall be provided with variable speed controllers.

2.13.8 Outdoor Intakes and Exhausts

New outdoor air intakes shall be located in areas where potential for air contamination is lowest such as away from overhead doors. Maximize the distance between intakes and exhausts by maintaining a minimum distance of 30 feet between intakes and exhausts and 50 feet between intakes and toilet, janitor room, etc. Motorized low-leakage damper with blade and jamb seals, shall be provided at all outside air intake and exhausts. If feasible, locate intakes and exhausts on different building faces. Maximum velocity through net area of air intakes shall be limited to 500 fpm.

Required flow rates shall be corrected for altitude.

2.13.9 Special Requirements

2.13.9.1 Toilet Rooms

The rest rooms shall be exhausted at the rate of 2 cfm per square foot. The required make-up air for the exhaust system shall be provided by supply air for the heating/cooling loads and through a door grilles (sized for a velocity of 500 fpm).

2.13.9.2 Janitors Closet

The janitor closet shall be exhausted at the rate of 2 cfm per square foot in order to maintain a negative room pressure. The required make-up air for the exhaust system shall be provided through a door grille (sized for a velocity of 500 fpm).

2.13.9.3 Mechanical and Electrical Equipment Rooms

a. The mechanical and electrical equipment rooms shall each be ventilated and cooled with outside air by thermostatically controlled fans; set to operate when the respective space temperature exceeds 85°F. Size of fan shall be based on removal of heat generated in room so inside temperature shall not exceed 98°F at design ambient temperature, but the system design shall not be less than 10 air changes per hour. Sone values of fans measured 5 feet from fan inlet shall be less than 20 Sones.

b. The mechanical equipment rooms containing gas burning equipment shall be provided with combustion air louvers sized and located in accordance with NFPA 54. The combustion air louvers shall be provided without dampers and shall be ducted down to within 12 inches of the mechanical room finished floor and ducted up to within 12 inches of roof level in order to minimize the potential for piping freeze-up in the mechanical room due to combustion air intake.

2.13.10 Security

All building penetrations shall be protected with security bars.

2.14 BUILDING TEMPERATURE CONTROL SYSTEMS

This paragraph contains instructions and engineering requirements for the design of the new building temperature control systems required for the operation of the building mechanical systems. The temperature controls shall be by HSQ Technology or Siemens Building Technologies, Building Automation and shall be fully integrated and connected to either the Base HSQ Technology or the Base Siemens Building Technologies, Building Automation EMCS system. DDC/EMCS system shall be supplied by the Contractor under this Contract and coordinated with either HSQ Technology or Siemens Building Technologies. All HVAC functions in the DDC system shall be controlled and monitored by the EMCS. The design of the control systems for the HVAC equipment shall be in accordance with Technical Specification 15951A DIRECT DIGITAL CONTROL FOR HVAC, revised as herein indicated. HSQ Technology or Siemens Building Technologies shall re-program the head-end computer to accommodate the Consolidated Space Group Operations Facility and provide equipment and services, peer-peer communications including software database programming, graphics

generation, calibration, and end-to-end testing of the head-end computer and this project's remote DDC panels, DTC's, and temperature control panels. EMCS fiber shall be extended in accordance with Section 01007 ELECTRICAL REQUIREMENTS. The control system shall be designed to provide continuous and automatic control of all HVAC equipment. Where equipment is provided with a packaged control system, such as in the case of boilers and chillers, the building control systems shall interface with the equipment's packaged control systems. The temperature control panels shall be located in the mechanical room(s). The number of control panels shall be dictated by the number of and types of equipment in the final design. This type of control system allows the EMCS operator to easily adjust setpoint, operating times and other system parameters, if and when necessary, once the building has been occupied.

2.14.1 General DDC Requirements

All mechanical systems and equipment, shall be controlled by local direct digital control (DDC) panel(s) located in the facility's Mechanical room(s). The DDC panel(s) shall operate in a stand alone fashion. Design shall be provided using Technical Specification Section 15951A DIRECT DIGITAL CONTROL FOR HVAC. To facilitate maintenance and to allow manual starting and stopping of equipment by maintenance personnel, a hard-wired Hand-Off-Automatic (HOA) control switch shall be provided for each new major piece of equipment (air handling unit, exhaust fan, etc.) in order to override the automatic DDC start and stop functions. Coordination with and input from the Base, and existing facility User and HSQ Technology, Inc. or Siemens Building Technologies has been required in order to ensure that the appropriate system points are monitored.

a. Fire alarm condition on any fire alarm circuit shall automatically initiate the deactivation of the air handling units throughout the building.

b. All computing devices, shall be as defined in FCC Rules and Regulations FCC Part 15, and shall be certified to comply with the requirements for Class A computing devices and labeled as set forth in FCC Rules and Regulations FCC Part 15.

c. Temperature Control Contractor Experience - The temperature control Contractor shall have a working knowledge of the DDC system (HSQ Technology, Inc. or Siemens Building Technologies) and experience installing these systems. The Contractor shall provide for approval the names and qualification of supervisory personnel (ie. Project Manager and /or Superintendent) that will be used on this project. The Contractor shall also provide a list of references to be contacted from recent projects on which the proposed personnel performed similar duties. Approval shall be based on previous experience with the DDC system (HSQ Technology, Inc. or Siemens Building Technologies) to be installed, qualifications and demonstrated ability of proposed personnel to manage resources in an efficient and effective manner. Experience and supervisory personnel qualifications must be submitted and approved before submittal of any technical data.

d. Emergency Service During Warranty - The Government will initiate service calls when the installed DDC/EMCS is not functioning properly. Qualified personnel shall be available to provide service to the complete DDC/EMCS installed under this project. Qualified personnel shall be defined as a factory trained journeyman in the brand of control system provided, this level of training shall be considered a

minimum. The Government shall be furnished with a telephone number where the service supervisor can be reached at all times. Service personnel shall be at the site within 8 hours after receiving a request for service. The control system shall be restored to proper operating condition within 3 calendar days after receiving a request for service.

e. Software - The Contractor shall provide all software updates and verify operation in the system. These updates shall be accomplished in a timely manner, fully coordinated with base operators, and shall be incorporated into the operations and maintenance manuals, and software documentation provided as submittals in section 15951A. There shall be at least one scheduled update near the end of the first year's warranty period, at which time the Contractor shall install and validate the latest released version of the Contractor's software.

f. All utility meters shall be provided to be connected to the base EMCS system to allow the necessary monitoring.

g. Fuses shall not be used for surge protection. Provide transient voltage surge suppression (TVSS).

h. Scheduled inspections shall be at the beginning of construction.

i. System descriptions and analyses submittal shall indicate how new system will interface with the existing Base EMCS as manufactured by HSQ Technology or Siemens Building Technologies.

2.14.2 DDC/EMCS DDD Panels and DTC Panels

DDC PANEL (REMOTE TERMINAL UNIT)

DDC panels shall be provided by HSQ Technology, Inc. or Siemaens Building Technologies, including associated interface boards, expansion boards, photo switches, circuit breakers, convenience outlets, power supplies, and pulse to analog (PTA) converters. Any RTU not on UPS power shall have full battery backup. The battery shall have sufficient power to last for six hours. Each DDC panel shall be defined as including all specified DDC panel characteristics, including I/O functions as specified. All RAM based programs shall be downline loadable from the CCU, building controller, or portable tester. All DDC default settings shall be saved in EPROM.

a. DDC panels shall be microcomputer-based with a minimum word size of eight bets. Each DDC panel shall have a minimum of 10 percent of it's I/O functions as spare capacity. The type of spares shall be in the same proportion as the implemented I/O funtions on the DDC panel, but in no case shall there be less than two spare points of each implemented I/O type. The DDC panel I/O functions shall be furnished complete, with no changes or additions necessary to support implementation of spare functions. Output relays associated with digital signals shall be considered part of the I/O function, whether physically mounted in the enclosure or separately mounted. Implementation of spare points by others shall necessitate only providing the addtitional field sensor or control, field wiring including connection to the system, and point definition assignment by the operator. The DDC panel shall contain all necessary I/O functions to connect to field sensors and control panels.

b. The DDC panel shall include: (deviations may be submitted for approval to the Contracting Officer)

(1) The following controls:

(a) Main power switch.
(b) On-off line switch - enables and disables communications with CCU/CCC and/or building controller.
(c) Self test switch - exercise DDC panel functions.
(d) Reset switch - initializes CPU operation.
(e) DDC panel outputs disable switch.

(2) The following indicators:

(a) Power on - includes one for each power supply voltage.
(b) On line (remotely controlled).
(c) GO-NO GO for self test of DDC panel and all communications functions.
(d) DDC panel outputs disabled.

c. Sufficient memory shall be provided to perform all specified and shown DDC panel functions and operations, including all spares, but not less than 64K bytes.

d. DDC Panel Communications. DDC panel to CCU Communications: Communications interfaces shall be provided for specified DTM circuit between DDC panels and the CCU and/or the building controller.

e. The DDC panel shall contain hardware to support a power fail automatic restart as specified.

DATA TERMINAL CABINET (DTC)

The DTC shall serve as an interface between each DDC panel, and the DE instrumentation and controls. No instrumentation or control devices shall be located within the DTC.

a. The DTC shall be an independent metallic enclosure not physically part of the DDC panel. The DTC shall be sized to accommodate the number of I/O functions required for each DDC panel, including installed spares, plus 25 percent expansion for each type of I/O function provided.

b. The DTC shall be provided with double sided screw type terminal strips. One side of the terminal strip shall be used for termination of field wiring from instrumentation and controls. The other side shall be used to connect the DTC to the DDC panel. Terminal strips shall have individual terminal identification numbers.

c. The DTC shall be a locking type mounting enclosure, with common deying and door switch wired to a DDC panel input for intusion alarm annunciation in the MCR. DTC keying shall be identical to the DDC panel.

SUPPORT EQUIPMENT

PROM Programmer - Where the DDC panel utilizes PROM for applications programs or data file parameters, provide a PROM programmer to program those PROM's used. The programmer shall be driven remotely through a dedicated EIA RS-232 interface or from the DDC panel portable tester. Provide means to remotely create, verify, modify, add to,and list the

applications programs and data file parameters. Provide means to erase each type of EPROM supplied. Ten spares of each PROM or EPROM type used for applications programs and data file parameters shall be delivered.

ENCLOSURES

Enclosures shall conform to the requirements of NEMA 250 for the types specified. Fininsh color shall be the manufacturer's standard, unless otherwise indicated. Damaged surfaces shall be repaired and refinished using original type finish. Enclosures installed indoors shall be NEMA 12 unless otherwise indicated. Enclosures for DDC panels and DTC's installed outdoors shall be NEMA 4 unless otherwise indicated. Enclosures for DDC panels and DTC's installed outdoors shall contain a thermostatically controlled space heater to maintain the enclosure above the dew point.

POWER SUPPLY

The DDC panels shall have power conditioning hardware.

DDC PANEL SOFTWARE

a. Monitoring and Control - Each command shall be executed by the DDC panel only after all constraint checks have been passed. Each command point shall have unique constraints assigned. High and low reasonableness values or one differential rate-of-change value shall be assigned to each analog input. Values outside the reasonableness limits shall be rejected.

b. DDC Panel Self-Test Diagnostics - Each DDC panel shall have self-test diagnostic routines implemented in firmware. The tests shall include routines that exercise memory.

c. DDC Panel Resident Applications Programs - The Contractor shall provide the following applications programs as specified in paragraph APPLICATIONS PROGRAMS and as required by the I/O summary tables, and the associated constraints and interlocks as specifice and shown, resident in the panel.

d. Software Control Blocks - The Contractor shall provide a hard copy of the software control blocks on media compatible with the DDC panel portable tester as specified herein.

DDC PANEL COMMAND SOFTWARE

a. Calculated Point - This value shall be created by calculating it from any combination of digital and analog points, or other data. The result of the calculation will be an analog or digital point having all the properties of real points, including alarms, without the associated hardware. The calculated analog point shall have point identification in the same format as any other analog point. The calculated point shall be used in any program where the real value is not obtainable directly. Calculated point values shall be current for use by the system within 10 seconds of the time any input value changes.

b. Analog Totalization - Any analog point shall be operator assignable to the totalization program. Analog values shall be totalized within a given time period. This time period shall be defined uniquely for each point for intervals of 1 minute over an 8-hour period, 1 hour over a 1-week period, 1 week over a 1 month period, and 1 month over a 1 year

period. At the end of the period, store the totals for future reference. Totalization shall then restart from zero for the next time period. The program shall keep track of the peak and total value measured during the current period and for the previous period. The operator shall be able to initiate a summary of all totalization information on a point, unit, building, or entire system. The operator shall be able to set or reset each totalized value individually. The operator shall be able to define, modify, or delete the time period on-line.

DDC PANEL APPLICATIONS PROGRAMS

a. Program Inputs - The Contractor shall select the appropriate program inputs listed for each application program to calculate the required program outputs. Where the specific program inputs are not available, such as no status indication called for on the I/O summary table, provide a default value to replace the missing input, thus allowing the application program to be tested. All analog inputs to applications programs shall have an operator adjustable deadband to preclude short cycling or hunting.

b. PID Tuning Program - Software shall be provided to generate a time base plot of the PID control action. The plotted variables shall be the process variable and the control output, which shall be displayed and updated in real time as the control parameters are changed. The major tuning parameters for the PID control loop shall be displayed on the plot.

c. Control Applications - Software shall be provided to allow the operator to generate control logic programs in free form which shall include the following basic capabilities:

(1) If, else, then statement logic.
(2) Do-loops
(3) Algebraic calculatins.
(4) Bolean logic statements.
(5) Relational expressions.

2.14.2.1 Editing Technical Guide Specification Section 15951A DIRECT DIGITAL CONTROL FOR HVAC

As a minimum, the following paragraphs shall be marked for deletion or addition using SpecsIntact and deleted or added in the Final Design/Build Contract Specifications.

a. Direct Digital (DDC) Hardware:

(1) Delete Network Control Panel, RIU, and Data Terminal Cabinet (DTC) paragraphs and replace with paragraph DDC/EMCS DDC PANELS AND DTC PANELS in this Section.

(2) Delete Universal Programmable Controllers (UPC) paragraphs.

(3) Delete Unitary Controller paragraphs (HSQ Technology, Inc. does not provide a unitary controller or what is commonly called an Application Specific Controller (ASC)).

(4) Delete all references to pneumatic, tubing, compressed air stations, PE's, Ep's, IP's, etc.

(5) Add information as required by paragraph GENERAL DDC REQUIREMENTS of this Section

b. DDC Software:

(1) Delete Resident Application Software paragraphs.

c. Execution:

(1) Extension of fiber optics shall be provided as indicated in Section 01007 ELECTRICAL REQUIREMENTS.

2.14.2.2 Controllers

All modulating mechanical processes (e.g., temperature, pressure, flow control) shall be controlled directly by the local DDC control panel. Except for safety and protection functions, software logic shall be used in lieu of relay logic. The contacts of safety and protection function instruments shall be hardwired in series with the common side of each equipment's HOA switch, and their proper operation shall not depend in any way upon the DDC.

2.14.2.3 Digital Controllers

Digital controller blocks or points within the control panels shall utilize a full proportional algorithm.

2.14.2.4 Stand-Alone Operation

The local control panels shall be fully capable of stand-alone operation on a continuous basis. All programs, including those based upon real-time clock or calendar events, shall reside in the local DDC panel.

2.14.3 Input/Output Devices

The control system shall utilize off-the-shelf input and output instruments (e.g., RTD sensors, actuators, relays) which are commercially available from third party vendors and who are independent from the DDC panel manufacturers.

2.14.4 Analog Sensors, Digital inputs & Digital outputs

All sensing devices shall be capable of removal from the system without disruption of service to the system in which they are installed. Sensors provided shall include, but not limited to, the following:

Supply air and return air temperature; Air Flow Measuring Stations (to be shown on mechanical HVAC drawings)
Boiler Inlet Temperature
Boiler Outlet Temperature
Boiler Fuel Flow
Boiler Water Reset
Heating Water Flow
Chilled Water Flow
Chiller Inlet Temperature
Chiller Outlet Temperature
Space temperature(s) (to be shown on mechanical HVAC drawings)

Outside air temperature sensors (to be shown on HVAC mechanical drawings)
Mixed air temperature sensors (to be shown on HVAC mechanical drawings)

Heating Coil Controls
Cooling Coil Controls
Hot Water Pump(s) Status
Hot Water Pump(s) start/stop
Chilled Water Pump(s) Status
Chilled Water Pump(s) Start/Stop
Air handling unit(s) status
Air handling unit(s) start/stop
Return Air Fan Status
Return Air Fan Start/Stop
Kilowatt meter
Gas meter
Water meter
Exterior Lighting Control on/off through the lighting contactors and DTC
Fan Coil Heating Coil Controls
\ Fan Coil Cooling Coil Controls
Fan Coil Unit(s) Status
Fan Coil Unit(s) Start/Stop

Liquid flow measurement for use by the DDC system shall be performed by paddle wheel-type flow sensors only. Pitot-type sensing elements may be installed for local instrumentation used for testing and balancing purposes only.

2.14.5 Cable and Wiring

Cable and wire for the DDC system shall be separate from the disstribution system serving any other system. All cable and wiring shall be installed in conduit. The data transmission media (DTM) shall be provided by the Contractor. The DTM shall be fiber optics cable complying to Class A computing devices as set forthe in FCC Part 15. The Contractor shall provide data transmission media (DTM). DTM shall be as specified and extended as on the electrical drawings in accordance with Section 01007 ELECTRICAL REQUIREMENTS.

2.14.6 Control Valves

Sizing of control valves shall take into account upstream and downstream fittings and shall be in accordance with Instrument Society of America standard ISA S75.01-1985.

2.14.7 Variable Air Volume Boxes

Variable air volume (VAV) boxes shall be fitted with DDC controllers and velocity sensors compatible with the existing EMCS. VAV box temperature sensors shall be located atop an associated return grille and be provided with 30 feet of sensor wire for future relocations. Where VAV air handling units with VAV boxes are provided, flow monitoring stations shall be provided to ensure proper indoor air quality when operating at minimum supply air flows.

2.14.8 Damper Actuators

All main mechanical equipment; AHU's, etc., shall be provided with 4-20 MA operated damper actuators. All minor/remote equipment shall be provided with 4-20 MA operated dampers operators.

2.14.9 Valve Actuators

All valves shall be provided with 4-20 mA-operated valve actuators.

2.14.10 HVAC Control Drawings

HVAC control drawings, for both the 60 percent and Final submittals, shall be in accordance with SECTION 01336 - 60 PERCENT DESIGN REQUIREMENTS, & SECTION 01338 - 100 PERCENT DESIGN REQUIREMENTS. Control drawings for each facility shall include a system schematic section, an elementary (ladder) diagram, a detailed sequence of control, a list of required components with a brief description of each component, a control panel detail, legend and schedules, a listing of input and output points and a matrix showing the point type, alarms and applications programs associated with each of the input or output points. EMCS details and points to be monitored shall be detailed on the contract drawings and follow the conventions as set forth in TM 5-815-2. System I/O summaries shall be detailed.

2.14.11 Control Schematic

The control schematic shall be a schematic representation of the HVAC system and the associated control equipment. The control schematic shall be drawn to a large scale to allow for ample space to indicate any necessary performance parameters such as setpoint, etc.. The control schematic shall be cross referenced to the elementary diagram and the control panel detail by numbered terminal points. Each component shall be identified by a unique alpha-numeric designator such as S1 for sensor number 1. This provides a means of cross referencing to the description of components and the sequence of control. All major control items relative to the system shall be shown. This may include, but shall not be limited to:

Supply Fans

Filters

Cooling Coils

Heating Coils

Pressure Sensors/Switches

Flow Sensors/Switches

Freezestats with manual reset

Smoke Detectors with connection to the FACP

Temperature Sensors

Dampers and Damper Actuators

VAV Boxes

Humidifiers

Relative Humidity Sensors

Fan Coils

2.14.12 Elementary Diagram

An elementary diagram or diagrams shall be provided showing the wiring of the control system devices. It shall be drawn to a large scale for easy reading and to allow space for indicting performance parameters. The elementary diagram shall be cross referenced to the control schematic and the control panel detail through the use of numbered terminal points.

2.14.13 Sequence of Control

The sequence of control is a written statement of the operation of the system. It should be as detailed and complete as possible and it should refer to individual components by their alpha-numeric designator whenever possible. The sequence shall break the overall system into sub-systems, such as supply fan control, mixed air control, heating control, cooling control, etc., and shall describe the operation of each of the subsystems. The sequence of control shall also describe the operation of all safety devices such as smoke detectors or freezestats, fire alarm interlock and shall describe the operation of the system in both the occupied, warm-up and unoccupied modes.

2.14.14 Description of Components

The description of components shall provide a generic description of the performance of each component. The components shall be referred to by their alpha-numeric designator.

2.14.15 Control Panel Detail

The control panel detail shall show the intended mounting location of any devices that are to be located in the control panel or on the front face of the panel. All field sensors and controls will be connected to data terminal cabinets to provide ease of diagnosis and repair of the system components. DTC panels shall be as specified in section 15951A with installed spares plus 25 percent expansion of each type of I/O function being provided. Control panels and DTC panels shall be shown on mechanical drawings.

2.14.16 Legends and Schedules

The legend shall provide a definition of all symbols used in the control drawings. Schedules shall provide all necessary information to clarify the operation of the components or the overall system.

2.14.17 System Checklists and Startup Instructions

The designer shall develop Pre-commissioning Test Checklists, Functional Performance Test Checklists, and Startup Instructions for each system and item of equipment controlled by the temperature control system and shall include them in the temperature controls Specification. Each system and item of equipment shall have its own separate Checklist and Startup Instructions. The Checklists and Startup Instructions shall be tailored to each individual component of the respective system or item of equipment and

shall use the terminology and nomenclature used in the drawings and specification.

2.15 TESTING, ADJUSTING, AND BALANCING OF HVAC SYSTEMS

This Section contains instructions and engineering requirements relating to the testing, adjusting, and balancing requirements of new mechanical HVAC systems. The work required by this section shall be complete, including all test and inspection reports, before starting the EMCS Field Test. Testing, adjusting, and balancing shall be meet the requirements of Technical Specification 15990A TESTING, ADJUSTING AND BALANCING OF HVAC SYSTEMS.

2.15.1 Balancing Firms Qualifications

Testing, Adjusting, and Balancing (TAB) shall be performed by an independent firm using certified technicians under the direct supervision of a certified technician. Technicians shall be certified by the National Environmental Balancing Bureau (NEBB) or the Associated Air Balance Council (AABC). The firm shall select AABC MN-1, or NEBB-01 as the standard for providing testing, adjusting and balancing of the mechanical systems. Air handling units' filters shall be artificially loaded during testing and balancing operations. Air handling unit(s) air flow shall be set for maximum with filters fully loaded.

a. TAB can be performed only after each system is complete, including installation and operation of controls, and all aspects of the facility that have any bearing on the HVAC systems, including installation of ceilings, walls, windows, doors, and partitions, are complete. All items such as ductwork and piping parts, terminal connections, etc, necessary to perform TAB shall be complete during the Systems Readiness Check.

2.16 CRAWL SPACE(S) (OPTIONS 1,2 AND 3)

As part of the crawl space option(s), the Contractor shall provide air shafts to the crawl space for ventilation air intake and relief. Air quantities shall be based on the requirements of ASHRAE 62 - Ventilation for Acceptable Indoor Air Quality and a people density of 8 persons per 1000 square feet.

2.17 RADON DE-PRESSURIZATION SYSTEM

2.17.1 General

The Contractor shall provide a radon de-pressurization system in accordance with Army ETL 1110-3-438 under all interior concrete slabs. The design and construction of the sub-slab system shall assume the presence of a high level (20 to 200 picocurries per liter (pCi/l)) of radon gas. For radon concentrations this high, ETL 1110-3-438 requires a system meeting the requirements of "Letter Codes A and C".

2.17.2 Radon Exhaust Ductwork

Radon exhaust ductwork installed in or beneath slabs shall be fabricated from Schedule 40 PVC pipe that conforms to ASTM D 1785. Fittings shall conform to ASTM D 2466. Solvent cement used to make joints shall conform to ASTM D 2564.

2.18 TECHNICAL SPECIFICATIONS

Government provided (UFGS) technical guide specifications (available to the Design-Build Contractor as indicated in Section 01332, SUBMITTALS FOR DESIGN) shall be completely edited and fully coordinated with the drawings to accurately and clearly identify the product and installation requirements for the facility. The specifications shall be edited in accordance with the designer notes associated with each specification and with the Specification Requirements (Division 01 General Requirement Specifications). In case of a conflict, the criteria found in the Specification Requirements (Division 01 General Requirement Specifications) shall take precedence. The provided specifications define the minimum requirements for items of equipment, materials, installation, training, operating and maintenance instructions, O&M manuals and testing that shall be provided for the facility. Where items of equipment, materials, installation, training, operating and maintenance instructions, O&M manuals or testing requirements are not covered in the provided specifications, special Sections within each guide specification(s) shall be prepared to cover those subjects. Specific items of equipment identified in the provided specifications but not required for the facility shall be edited out.

2.19 ENERGY USE BUDGET (EUB) COMPLIANCE CHECK

Design energy Usage (DEU) estimates shall be calculated for the new building to verify compliance with EUB in accordance with 10 CFR, Subpart A, Part 435, ASHRAE/IESNA 90.1; and the Energy Policy Act of 1992. Energy Usage Budget shall be done without process loads. Values indicated below shall be the maximum EUB target allowed. DEU shall be less than Energy Usage (EUB) target values indicated in Table I.

Table I
Energy Usage Budget Target For This Project.

Building	Type	Region	EUB Target	Hours per Day /Days per Week
Administration	A1	6	45,000 Btuh/square feet/year	10/5

If another distinct function or facility type is being performed in an area which comprises 10 percent or more of the building's gross floor area, the EUB will be normalized by using the following formula:

EUB = EUB21(Area 1/Area T)+ EUB2 (Area 2/Area T) +..+ EUBN (Area N/Area T) where EUB is for the mixed use building, EUBN is for one of the distinct functional areas, AreaN is the gross floor area devoted to the function N, and Area T is the total gross floor area of the building.

Building EUB shall be provided using a computer-based program.

M = Million

2.19.1 Computer Simulation

The Energy Usage Budgets shall be calculated using a computer simulation. Method used must take into account the constantly changing temperatures, sun loads, etc., through a year's operation. Use of the program "BLAST" is encouraged. If "BLAST" is used, the "REVIEW SUMMARY REPORT" shall be

included in the output report. Any program other than Building Load Analysis and Systems Thermodynamics "BLAST","TRANE TRACE latest version",Carriers' latest version, DOE 2.1.E or BESA (Canada) requires prior approval for use. Request for use must demonstrate compliance with the following:

2.19.1.1 Acceptable Engineering Procedures

The energy analysis and building simulation will use a computer program which is based on acceptable engineering procedures. Load calculations and the systems simulation will be on an hourly basis for 12 to 365 days. Although hourly data for 365 days is preferred, a minimum of 12 model days (a statistically average day per month) is acceptable. If calculations are based on less than 365 days, the weather data selected for these days will be statistically derived.

2.19.1.2 Capable of Change

The computer program must be capable of changing the various cooling and heating loads and the thermostat settings to simulate building operations and to simulate dead band and deck/coil reset control strategies.

2.19.1.3 Cooling and Heating Loads Influencing the Building Design

The program must consider all cooling and heating loads which influence the building design. These include solar, outside air, people, lighting, equipment, etc., as well as taking into account the thermal time lag of materials.

2.19.1.4 Alternatives

Some of the alternatives that the program should be capable of analyzing include:

a. Orientation of Building.

b. Wall and roof construction and insulation.

c. Dimensions of Building.

d. Window area, solar shielding, tinted, and single or multiple glazed windows.

e. Types of fuel.

f. Central heating versus individual systems.

g. Type of equipment.

h. Type of mechanical systems, e.g., Constant/Variable volume, single zone/multizone.

i. Type of lighting systems, e.g., standard incandescent or fluorescent and low wattage, high output lighting systems.

2.19.2 Summary Report

Provide a summary section in the separate energy analysis report and results in the design analysis. Include all input data such as U values,

design temperatures, hours of operation, building population and size, etc. Include output data such as distribution percentages (lighting, heating, cooling, fan, etc.).

2.20 TRAINING

Training courses shall be conducted for 15 operating staff members designated by the Contracting Officer in the maintenance and operation of all systems (one week for DDC/EMCS controls). Two week notice shall be given the Contracting Officer prior to training. A training day is defined as 8 hours of classroom instruction, including breaks and lunchtime, Monday through Friday, during the daytime shift in effect at the training facility. For guidance in planning the required instruction, the Contractor shall assume that the attendees will have a high school education or equivalent, and are familiar with the systems. No training shall be scheduled until training manuals and O&M manuals have been approved by the Government. A minimum of 15 O&M manuals shall be provided for the instructions and 1 manual for each facility shall be given to the Contracting Officer to turnover to the Base Civil Engineer.

2.20.1 Training Course Content

The courses shall be taught at the project site for a period of 5 training days. The training courses shall cover all the material contained in the Operating and Maintenance Instructions, and O&M manuals the layout and location of each system and shall include the following for each system:

a. Troubleshooting
b. Diagnostics
c. Calibration
d. Adjustment
e. Commissioning
f. Repair procedures

Typical systems and similar systems may be treated as a group, with instruction on the physical layout of one such system. The results of the performance verification tests and the calibration, adjustment and commissioning reports shall be presented as benchmarks of the system(s) performance by which to measure operation and maintenance effectiveness.

-- End of Section --t

SECTION TABLE OF CONTENTS

DIVISION 01 - GENERAL REQUIREMENTS

SECTION 01007

ELECTRICAL REQUIREMENTS

PART 1 ELECTRICAL DESCRIPTIONS AND NARRATIVES

1.1 GENERAL
1.1.1 References
1.1.2 STANDARD PRODUCTS
1.1.3 Special Environmental Conditions
1.1.4 Color of Exterior Equipment
1.1.5 Accommodation of Disabilities
1.1.6 Antiterrorism/Force Protection
1.2 COORDINATION OF ELECTRICAL CRITERIA
1.3 EXTERIOR PRIMARY ELECTRICAL DISTRIBUTION SYSTEM
1.3.1 Exterior Underground Primary Electrical Requirements
1.3.1.1 Medium Voltage Cables and Conduit
1.3.1.2 Terminations and Splices
1.3.2 Medium Voltage Pad Mounted Switch
1.3.3 Manholes and Duct Banks
1.4 EXTERIOR UNDERGROUND SECONDARY ELECTRICAL DISTRIBUTION REQUIREMENTS.
1.4.1 Pad-Mounted Tamperproof Compartmental Transformer
1.4.2 Locations
1.4.3 Grounding
1.5 UNDERGROUND SERVICE ENTRANCE/FEEDER/BRANCH CIRCUITS
1.5.1 Conduits
1.6 EXTERIOR LIGHTING SYSTEM
1.6.1 Area Lighting
1.6.1.1 Walkway Lighting
1.6.1.2 Exterior Building Lighting
1.6.2 Exterior Lighting Control
1.6.3 Underground Lighting Circuits
1.7 COMMUNICATIONS DUCT BANK/MANHOLES
1.8 CATHODIC PROTECTION SYSTEM
1.9 UNDERGROUND CABLE MARKINGS
1.10 INTERIOR ELECTRICAL DISTRIBUTION SYSTEM
1.10.1 Service Equipment
1.10.1.1 Main Distribution Panel (MDP)/Panelboard
1.10.1.2 KWHR Meter
1.10.1.3 Protective Coordination Study
1.10.2 Panelboards
1.10.3 Motors
1.10.4 General Purpose Duplex Receptacle Outlets
1.10.5 Special Receptacles
1.10.6 Computer Outlets
1.10.6.1 Additional Computer Outlet - Locations
1.10.6.2 Device Plates
1.10.7 Other Loads
1.10.8 Architectural/Mechanical Connections
1.10.9 Portable Generator Connection
1.11 INTERIOR LIGHTING SYSTEM
1.11.1 Illumination Levels

1.11.2 Conservation Requirements
1.11.3 Fluorescent Fixtures
1.11.4 Incandescent Lighting Fixtures
1.11.5 Egress and Exit Lighting Fixtures
1.12 INTERIOR COMMUNICATION SYSTEM
1.12.1 General
1.12.2 Communication Terminal Backboard
1.12.3 Communications Raceway
1.12.4 Telephone/Data(LAN) Conductors
1.12.5 Telephone/Data(LAN) Outlets
1.12.6 Cross Connect Blocks
1.12.7 Patch Panels
1.12.8 Satellite Support
1.12.8.1 TELEVISION (CATV)
1.14 PUBLIC ADDRESS (PA) SYSTEM
1.13 EMCS (ENERGY MONITORING AND CONTROL SYSTEM)
1.14 BALANCED MAGNETIC SWITCHES
1.15 GROUNDING SYSTEM
1.15.1 Communication Grounding System
1.15.2 Equipment Grounding Conductors
1.15.3 Earth Electrode System
1.15.4 Separately Derived Systems
1.16 LIGHTNING PROTECTION SYSTEM
1.17 FIRE DETECTION AND ALARM SYSTEM
1.18 EQUIPMENT SIZING REQUIREMENTS AND RATINGS
1.18.1 Interrupting Capacities
1.18.2 FEEDERS AND BRANCH CIRCUITS
1.18.2.1 Transformer Feeders
1.18.2.2 Neutral Sizing
1.18.2.3 Derating
1.18.2.4 Parallel Runs
1.18.3 Nuisance Tripping
1.18.4 Installation

PART 2 NOT USED

PART 3 NOT USED

-- End of Section Table of Contents --

SECTION 01007

ELECTRICAL REQUIREMENTS

PART 1 ELECTRICAL DESCRIPTIONS AND NARRATIVES

1.1 GENERAL

1.1.1 References

Publications, codes, specifications and standards shall be used as the basic for the project design and shall include, but not be limited to the following:

ASSOCIATION OF EDISON ILLUMINATING COMPANIES (AEIC)

AEIC CS6	(1996)Ethylene Propylene Rubber Insulated Shielded Power Cables Rated 5 Through 69 kV

AMEICAN NATIONAL STANDARDS INSTITUTE (ANSI)

C57.12.26	(1993)Pad-Mounted Compartmental-Type, Self-Cooled, Three-Phase Distribution Transformers for Use with Separable Insulated High-Voltage Connectors, High-Voltage, 34 500 Grd Y/19 920 Volts and Below; 2500 kVa and Smaller
IEEE C2	(1997) National Electrical Safety Code

NATIONAL ASSOCIATION OF CORROSION ENGINEERS(NACE)

NACE RP0169	(1992) Control of External Corrosion on Underground or Submerged Metallic Piping Systems

NATIONAL ELECTRICAL MANUFACTURERS ASSOCIATION (NEMA)

NEMA WC 8	(1988; Rev 3; 1996) Ethylene-Propylene-Rubber-Insulated Wire and Cable for the Transmission and Distribution of Electrical Energy

NATIONAL FIRE PROTECTION ASSOCIATION (NFPA)

NFPA 70	(2002)National Electrical Code (NEC)
NFPA 75	(1999)Standard for the Protection of Electronic Computer/Data Processing Equipment
NFPA 101	(1997)Safety to Life from Fire in Buildings and Structures
NFPA 780	(1997)National Lightning Protection Code

UNDERWRITERS LABORATORIES (UL)

UL 44	(1999)Thermoset-Insulated Wires and Cables
UL 83	Safety Thermoplastic-Insulated Wires and Cables
UL 854	(1996; Rev Oct. 1999)Service-Entrance Cables
IES HANDBOOK	(1993)Illuminating Engineering Society Handbook
LIGHTING STANDARDS	(Oct. 97)Corps of Engineers Standard Lighting Fixture Details Drawing Series No. 40-06-04 http://cadlib.wes.army.mil CADD Details Library, Electrical Details USACE Standard Details 40-06-04, Oct. 97
DISTRIBUTION STANDARDS	Corps of Engineers Standard Electrical Distribution Details. http://cadlib.wes.army.mil CADD Details Library, Electrical Details Electrical Service and Distribution
ETL 94-2	Utility Meters in New and Renovated Facilities
AFJMAN 32-1080	Electrical Power Supply and Distribution
Facilities Installation Standard (FIS)	03 JAN 2000, 50th Space Wing Instruction 33-105
UFC 4-010-01	DoD Minimum Antiterrorism Standards for Buildings
ISO/IEC 11801	Generic Cabling for Customer Premises
ICEA S-83-596	Fiber Optic Premises Distribution Cable
ICEA S-80-576	Communications Wire and Cable for Wiring of Premises
IEC 60297-1	Mechanics for Racks - 19 inch Common Standard (DIN41494)

TELECOMMUNICATIONS INDUSTRY ASSOCIATION/ELECTRONIC INDUSTRIES ASSOCIATION (TIA/EIA).

568B	Commercial Building Telecommunications Cabling Standard
569A	Commercial Building Standard for Telecommunications Pathways and Spaces
570A	Residential Telecommunications Cabling Standard
606A	Administration Standard for Commercial Telecommunications Infrastructure

607A Commercial Building Grounding (Earthing) and Bonding Requirements for Telecommunications

485A Electrical Characteristics of Generators and Receivers for Use in Balanced Digital Multipoint Systems

644A Electrical Characteristics of Low Voltage Differential Signaling (LVDS) Interface Circuits

TIA-232-F Interface Between Data Terminal Equipment and Data Circuit-Terminating Equipment Employing Serial Binary Data Interchange

222-F Structural Standards for Steel Antenna Towers and Antenna Supporting Structures

EIA-310-D Cabinets, Racks, Panels, and Associated Equipment

TSB 67 Transmission Performance Specifications for Field Testing of Unshielded Twisted-Pair Cabling Systems

1.1.2 STANDARD PRODUCTS

Material and equipment shall be a standard product of a manufacturer regularly engaged in the manufacture of the product and shall essentially duplicate items that have been in satisfactory use for at least 2 years prior to bid opening. The label or listing of the Underwriters Laboratories, Inc., will be accepted as evidence that the materials or equipment conform to the applicable standards of that agency. In lieu of this label or listing, a statement from a nationally recognized, adequately equipped testing agency indicating that the items have been tested in accordance with required procedures and that the materials and equipment comply with all contract requirements will be accepted.

1.1.3 Special Environmental Conditions

Exterior electrical equipment such as facility transformers, generators, and lights shall be suitable for environment and shall operate within a temperature range of -20 degree F to 100 degrees F. Equipment shall be at an elevation of 6145 feet.

1.1.4 Color of Exterior Equipment

All exterior electrical equipment such as the service entrance transformer and pad-mounted switches shall be factory painted Federal Standard color 595a (dark brown).

1.1.5 Accommodation of Disabilities

All designs shall incorporate provisions of the Americans with Disabilities Act Guidelines (ADAAG), NFPA 72 and the Uniform Federal Accessibility Standards (UFAS). All aspects concerning placement and sizing from these standards shall be incorporated. In case of a conflict between the ADAAG and the UFAS or the ADAAG and NFPA 72, the ADAAG shall govern. Provisions pertaining to clearances shall generally be accommodated by other

disciplines, however the design shall observe some precautions such as avoiding equipment configurations which would project into restricted clear space in corridors.

1.1.6 Antiterrorism/Force Protection

a. Unobstructed Space. It is assumed that aggressors will not attempt to place explosive devices in areas near buildings where these explosive devices could be visually detected by building occupants observing the area around the building. Therefore, ensure that obstructions within 33 feet of inhabited buildings or portions thereof do not allow for concealment from observation of explosive devices 6 inches or greater in height. This does not preclude the placement of site furnishings or plantings around buildings. It only requires conditions such that any explosive devices placed in that space would be observable by building occupants.

1) Electrical and Mechanical Equipment. The preferred location of electrical and mechanical equipment such as transformers, air-cooled condensers, and packaged chillers is outside the unobstructed space. However, this standard does not preclude placement within the unobstructed space as long the equipment provides no opportunity for concealment of explosive devices.

2) Equipment Enclosures. If walls or other screening devices with more than two sides are placed around electrical or mechanical equipment within the unobstructed space, enclose the equipment on all four sides and the top. Openings in screening materials and gaps between the ground and screens or walls making up an enclosure will not be greater than 6 inches. Secure any surfaces of the enclosures that can be opened so that unauthorized personnel cannot gain access through them.

b. Utility Distribution and Installation. Utility systems can suffer significant damage when subjected to the shock of an explosion. Some of these utilities may be critical for safely evacuating personnel from the building or their destruction could cause damage that is disproportionate to other building damage resulting from an explosion. To minimize the possibility of the above hazards, apply the following measures:

1) Utility Routing. For all new inhabited buildings, route critical or fragile utilities so that they are not on exterior walls or on walls shared with mailrooms.

2) Emergency Backup Systems. Where emergency backup systems are required in accordance with requirements or criteria, ensure that they are located away from the system components for which they provide backup.

c. Equipment Bracing. Mount all overhead utilities and other fixtures weighing 31 pounds or more to minimize the likelihood that they will fall and injure building occupants. Design all equipment mountings to resist forces of 0.5 times the equipment weight in any direction and 1.5 times the equipment weight in the downward direction. This standard does not preclude the need to design equipment mountings for forces required by other criteria such as seismic standards.

d. Mass Notification. All inhabited buildings must have a timely means to notify occupants of threats and instruct them what to do in response to those threats.

1) New Buildings. All new inhabited buildings must have a capability

to provide real-time information to building occupants or personnel in the immediate vicinity of the building during emergency situations. The information relayed must be specific enough to determine the appropriate response actions. Any system, procedure, or combination thereof that provides this capability will be acceptable under this standard.

1.2 COORDINATION OF ELECTRICAL CRITERIA

All electrical criteria provide in this section shall be coordinated with the architectural section, mechanical section, fire protection section, structural section, interior design section, civil and site section, and all other sections not mentioned here. The number and location of all electrical equipment indicated in the electrical requirements are approximate. Contractor design shall meet the intent of the electrical requirements provided in this section. Contractor shall coordinate the final locations of all electrical equipment with the BASE USERS to be provided by the Contracting Officer in the Field after the award of the RFP.

1.3 EXTERIOR PRIMARY ELECTRICAL DISTRIBUTION SYSTEM

The existing base primary electrical distribution system is a 12,470 volt DELTA, 3-phase, 3-wire + ground, 60 Hertz underground distribution system. Contractor shall extend and route non-critical primary distribution from an existing Manhole next to Building 440. The existing Manhole to the east of Building 440 contains a spare set of conductors (one for each phase) and a spare duct running east out of this Manhole. The Contractor shall install a new switch to the east of this existing Manhole. Contractor shall route new conductors from the new switch to the existing Manhole east of Discoverer Street. Contractor shall continue to route electrical primary north to another existing Manhole then east to a new Manhole, and then south to the new pad-mounted transformer. Load break elbows are not permitted in electrical manholes. #4/0 A.W.G. minimum primary conductors shall be routed in 4" conduit in concrete encased duct bank from pad-mounted switch to a new pad-mounted transformer. One spare 4" conduit shall be routed in same duct bank. New pad-mounted transformer shall be provided by Contractor.

1.3.1 Exterior Underground Primary Electrical Requirements

1.3.1.1 Medium Voltage Cables and Conduit

The primary cable shall be 133 percent insulated copper conductors (EPR) in concrete encased PVC conduit. Minimum burial depth shall be 3'-6" below finished grade. EPR cable insulation shall conform to the requirements of NEMA WC 8 and AEIC CS6.

1.3.1.2 Terminations and Splices

All primary load break elbows and termination kits shall be rated 15 kV and shall be 3M type or approved equal.

1.3.2 Medium Voltage Pad Mounted Switch

A new pad-mounted switch shall be placed on a concrete pad located to the east of the existing Manhole next to Building 440. Switch shall be of dead front construction. A ground ring or counterpoise #1/0 AWG minimum shall be provided with two ground rods at opposite corners. The new switch shall have two 12 inch spacers installed between the pad and the switch. Orientation and placement of the new switch shall allow a 10 ft hot stick

to be used on the switch in all compartments. Sides which do not require hot stick operation shall not be closer than 4 ft to another object.

1.3.3 Manholes and Duct Banks

All new distribution primary lines shall be installed underground in a concrete encased duct bank with 4" conduits. There shall be one spare 4" conduit/duct for each filled conduit/duct as a minimum. The duct/conduit used in the concrete-encased duct bank shall be schedule 40 pvc. Contractor shall either bore or push 4" electric conduits under roadways. Roadways shall NOT be cut for new duct bank crossing. New electric power manholes shall be provided at 90 degree turns and outside the facility as a minimum.

Distance between manholes shall not exceed 300 feet and not more than 360 degrees of total bend. Electric manhole covers shall be stamped "Electric" or similar working to indicate an electric manhole. Minimum size of manholes shall be 12 ft height by 8 ft wide by 6 ft deep. Each manhole and handhole shall have at least one ground rod and a looped ground conductor around the manhole mounted 12 inches above the floor. Where the ground rod enters the concrete, the ground rod shall be taped with electrical tape to 6" to each side of the concrete. Each manhole shall have mounting hardware to support the cable. The hardware shall be grounded to the ground conductor if metallic. Non-metallic hardware is preferred.

Each manhole shall have hardware to allow for the pulling of conductors installed at the duct bank entrance. Each manhole shall have collars added to raise the lid enough for water runoff, and a minimum of 12" of gravel under the manhole to allow for water drainage. Each manhole shall have a permanently installed ladder as part of the manhole. The ladder rungs shall be 12" apart, and an extendable hand hold shall be attached to the ladder which extends at least 3 ft above ground level to gain access to the ladder. The ladder shall have fall protection requirements. The neck shall be securely attached and not just laid in place. The neck shall also be sealed water tight. Necks made of bricks shall not be used. Conductors shall be looped around the manhole. All conductors in manholes shall be fire taped. Each circuit shall be fire taped individually. Power and communications ducts can be installed in the same trench. The power and communication ducts would be on the same horizontal level. No other utilities are allowed in the trench. For additional guidance see Attachment 5: CABLE MANAGEMENT COORDINATION SHEET.

1.4 EXTERIOR UNDERGROUND SECONDARY ELECTRICAL DISTRIBUTION REQUIREMENTS.

Exterior secondary electrical distribution system to the Consolidated Space Group Operations Facility shall be 480Y/277 volt, 3-phase, 4-wire underground service in conduit routed underground from pad mounted transformer to a main service rated circuit breaker in NEMA 3R enclosure located on the exterior building wall. The main service disconnect shall be accessible from grade level. From the main service disconnect, the service shall be routed through a manual transfer switch (also NEMA 3R enclosure) located next to the service disconnect, up to the Main Distribution Panel (MDP) located in the first level electrical room. A tap shall be made ahead of main service disconnect for the building fire pump, which meets all requirements in NFPA 70 for fire pump feeders. The manual transfer switch will allow switching between building main service and a mobile generator (generator is base provided). Manual transfer switch shall be equipped with means of locking it in the closed position. Install new generator inlet box next to transfer switch to permit connection of

mobile generator. Main facility feeder, manual transfer switch and main distribution panel shall be sized to have a minimum of 30% spare capacity above the estimated maximum demand for the building.

1.4.1 Pad-Mounted Tamperproof Compartmental Transformer

The pad-mounted transformer shall be a 12,470 volt, three-phase, delta-wye; oil-immersed unit (non-PCB), outdoor type with copper windings and conductors. Aluminum is not acceptable. Facility transformer shall be sized to have a minimum of 30% spare capacity above the estimated maximum demand for the building. Facility transformer shall be derated for altitude. The transformer shall be loop feed type with surge arresters on spare bushings. See Exterior Underground Secondary Electrical Distribution Requirements for pad-mounted transformer secondary distribution voltages. Transformer pad shall extend 10" beyond the edge of the transformer furnished. Pad-mount transformer shall comply with ANSI C57.12.26.

1.4.2 Locations

Transformers of the mineral oil-insulated or low flammability ("non-flammable", "less flammable liquid-filled") type shall be loacted not less than 33 feet from combustible walls or building openings. Where this is not feasible, the requirements of Mil Handbook 1008C shall be met.

1.4.3 Grounding

a. When the transformer is delta on the primary, but the primary system voltage is a grounded-wye, bring the neutral (grounded conductor) and connect to the ground lug on the transformer.

b. Frame of the transformer is to grounded from the high voltage equipment pad and the low voltage equipment pad.

c. On a grounded-wye secondary, a ground strap is required from XO to the frame.

d. When a building has a lightning protection system with a ground ring and the transformer has a ground ring and the ground rings are within 25 FT of each other, then the ground rings shall be interconnected below grade.

e. Service from transformer to building should not have a grounding conductor. NEC does not require this conductor. If the service is a bus duct, there may be a benefit to installing a grounding conductor of the same size as the neutral.

f. Install a ground ring (counterpoise), minimum size shall be #1/0 AWG, around concrete pad with a ground rod at each corner. The ground ring size shall be increased in size to the proper size per IEEE, if the fault current indicates that #1/0 AWG is not adequate. Bond perimeter steel columns to ground ring and bond building slab rebar to steel columns.

g. Extend separate conductors from arresters and transformer neutral/housing and connect to the ground ring.

h. Ground any metallic conduit/duct to the ground ring.

i. Provide any other connections required by the NEC or NESC.

1.5 UNDERGROUND SERVICE ENTRANCE/FEEDER/BRANCH CIRCUITS

Service entrance conductors, branch and feeder circuits shall be single conductors, Type USE or RHW. Service entrance conductors and underground feeder/branch circuits shall be copper conductors with insulating grounding conductor in Sch. 40 PVC conduit. Transition to RGS conduit when above grade. Aluminum conductors and direct buried cables are NOT acceptable. The Consolidated Space Group Operations Facility shall be feed from existing circuit B-6 from the Power Plant (BLDG 600).

1.5.1 Conduits

Conduits shall be non-encased direct-burial Sch. 40 PVC for low voltage circuits. Top of conduit shall be 36" below finished grade. Transition to RGS conduit when above grade.

1.6 EXTERIOR LIGHTING SYSTEM

Area lighting shall be provided for all walkways, above all exit doors, and area signage. Lighting fixtures shall utilize high pressure sodium lamps. Fixtures shall match existing fixtures on BASE as to height and style. Fixture finish shall be anodized bronze to match existing lighting finishes. Design shall be in accordance with IES Handbook, and the requirements in this section.

1.6.1 Area Lighting

Area lighting shall be provided for all areas noted above. Area lighting contactors and controls for the building shall be installed in the electrical rooms. Exact location of lighting controls shall be coordinated with the USER during the design of the project. Area lighting control shall as referenced in paragraph "Lighting Control" below.

1.6.1.1 Walkway Lighting

Walkway lighting fixtures shall be bollard type. Walkway lighting bollards shall be placed along walkway and between walkway and parking lot to block parking lot traffic from side walk access. Lamps shall high pressure sodium and shall be sized to meet lighting criteria. The bollards shall match existing fixtures installed on base. Walkway lighting control shall be as referenced in paragraph "Lighting Control" below.

1.6.1.2 Exterior Building Lighting

Exterior building lighting fixtures shall match existing installed on base. Lamps shall be high pressure sodium and sized to meet the lighting criteria. Fixtures shall be mounted at each entrance for the building. Exterior building lighting control shall be as referenced in paragraph "Exterior Lighting Control" below. Fixtures shall be wired from within the building and shall conform to the interior wiring standards described in this Section. No building lighting circuits shall be surface mounted.

1.6.2 Exterior Lighting Control

Provide disconnect switch with HAND-OFF-AUTOMATIC switch and lighting contactors for exterior lighting controls. Lighting contactors shall be controlled from an EMCS Panel dry contact through the automatic leg of the

HOA switches. Install lighting controls in the electrical room or otherwise indicated in this section. Lighting controls installed outside the electrical rooms shall be in weatherproof enclosures. Install lighting controls per requirements of this section. Exact location of all lighting controls shall be verified with the USER during design of the project.

1.6.3 Underground Lighting Circuits

Provide underground branch circuits for all exterior lighting circuits. Branch circuits shall be insulated copper conductors with insulated grounding conductor in conduit. Aluminum conductors are NOT acceptable. Direct buried conductors are NOT acceptable. All underground lighting conductors shall be in schedule 80 PVC. Transition to RGS conduit when above grade. Top of conduit shall be 36" below finished grade.

1.7 COMMUNICATIONS DUCT BANK/MANHOLES

Contractor shall install a new unclassified communications duct bank from the Consolidated Space Group Operations Facility to an existing Manhole located to the north of the site. Contractor shall install a new classified communications duct bank from the Consolidated Space Group Operations Facility to an existing system in Bldg. 401.

Communications ductbank shall be encased with 8" of concrete in all directions and buried minimum 36" below finished grade. Contractor shall either bore or push communications conduits under roadways. Roadways shall NOT be cut for new duct bank crossing. The manholes will be grounded in accordance with IEEE C2. Each manhole shall have mounting hardware to support the cable. The hardware shall be grounded to the grounding conductor if metallic. Non-metallic hardware is preferred. Provide pull strings in each duct. Duct banks under roadways shall consist of PVC coated rigid steel conduit.

All Communications manholes shall mirror Manhole 130 (12'L x 8'W x 6'D interior) with 32" cover. Covers shall be casted with "Communication" along with the respective manhole numbers (to be provided by government), galvanized rails and racks on all walls and French drains with grate and lock. Populate 50% of all ductbank and 4" conduit with 1 1/2" 1x4 Maxcell by TVC like/type inner duct with pull string.

Each manhole shall have hardware to allow for the pulling of conductors installed at the duct bank entrance. Each manhole shall have collars added to raise the lid enough for water runoff, and a minimum of 12" of gravel under the manhole to allow for water drainage. Each manhole shall have a permanently installed ladder as part of the manhole. The ladder rungs shall be 12" apart, and an extendable hand hold shall be attached to the ladder which extends at least 3 ft above ground level to gain access to the ladder. The ladder shall have fall protection requirements. The neck shall be securely attached and not just laid in place. The neck shall also be sealed water tight. Necks made of bricks shall not be used. Conductors shall be looped around the manhole. All conductors in manholes shall be fire taped. Each circuit shall be fire taped individually. Power and communications ducts can be installed in the same trench. The power and communication ducts would be on the same horizontal level. No other utilities are allowed in the trench. For additional guidance see Attachment 5: CABLE MANAGEMENT COORDINATION SHEET.

1.8 CATHODIC PROTECTION SYSTEM

A sacrificial anode cathodic protection system shall be provided for all underground metallic lines (including sewer lines), fittings, valves and fire hydrants. If underground lines are non-metallic, then all associated metallic fittings, valves, hydrants, Tee's and 90's, etc. shall be protected and there shall be a tracer wire provided over the pipeline. A dedicated galvanic anode shall be used for each fitting, valve, hydrant, etc. All galvanic anodes shall be connected to the structure through a test station. At least one test station shall be provided on each valve, fire hydrant and metallic pipe. Isolate all new piping from existing piping. All insulated flanges or couplings, if not accessible, shall have a test station which is connected to either side of the insulated flange or coupling. All connections to structures shall be done with two conductors: one is the active conductor and one is a spare. A conductor color coding system shall be used: black for anode, red for main structure and blue for a second structure. In addition to the anodes, all metallic pipes must be provided with a coating system. The cathodic protection systems shall be designed and installed in accordance with NACE RP0169 Standards. The design of the system shall be a minimum of 25 years with a soil resistivity of 1500 ohm-cm. The highest quality magnesium anode shall be used. Criteria for determining the adequacy of protection shall be in accordance with NACE RP0169 and shall be selected by the corrosion engineer as applicable. Test stations shall be flush-curb box mounted in 1' X 1' concrete pads. Anode wires shall be #10 AWG.

1.9 UNDERGROUND CABLE MARKINGS

A color-coded plastic warning tape shall be placed at least 4" wide within the trench above all buried utility lines. RED shall be supplied for the buried electrical lines and ORANGE shall be supplied for all the buried communication lines.

1.10 INTERIOR ELECTRICAL DISTRIBUTION SYSTEM

The interior secondary distribution voltage within the building shall be 480Y/277 volt, 3-phase, 4-wire. Conductors shall be copper, type THHN/THWN conforming to UL83, 600 volt. Aluminum is not acceptable. 480 volts, 3-phase shall be available at main distribution panel and be used for larger motor loads, equipment loads, exterior lighting and all other required loads. Provide step down transformers (480: 120/208V, 3-phase) and associated distribution panelboards for all receptacle loads, small motor loads, computer loads, interior lighting, and all other loads as required. Step down transformers shall have a 30% spare capacity for future loads. Transformer windings and conductors shall be copper. Aluminum is not acceptable. Transformers that serve non-linear loads such as the computer receptacles shall have K-rated transformers. Wiring shall consist of insulated conductors installed in rigid zinc-coated steel conduit or electrical metallic tubing, conforming to latest edition of NFPA 70. Plastic conduit is allowed only underground or under the floor slab. Raceways shall be concealed within finished walls, ceiling, and floors.

1.10.1 Service Equipment

Service equipment/disconnecting means shall be provided in the service rated enclosed main circuit breaker located on the exterior building wall. Service disconnect means shall be of the insulated-case circuit breaker type. Secondary surge protection shall be provided at the Main Distribution Panel.

1.10.1.1 Main Distribution Panel (MDP)/Panelboard

Main Distribution Panel(MDP)shall be in a metal-enclosure. MDP main circuit breaker shall be of the insulated-case circuit breaker type. Branch circuit breakers shall be molded-case type circuit breakers, except that branch circuit breakers 200 amp trip and larger shall be insulated-case type. Enclosure shall be ventilated general purpose type wall mounted type. Busses for the Main Distribution Panel (MDP) and all panelboards shall be tin-plated copper only. Aluminium shall not be allowed. Each phase, neutral and equipment grounding bus shall be clearly shown on the drawings. Short circuit rating of all busses shall be clearly indicated on the drawings. Enclosure for Main Distribution Panel and all interior panelboards shall be NEMA type 1.

1.10.1.2 KWHR Meter

Metering shall comply with Engineering Technical Letter (ETL) 94-2: Utility Meters in New and Renovated Facilities. KWHR meters with 15 minute demand registers shall be provided for recording power consumption of the facility. Meters shall be provided with pulse initiators for connection to the BASE EMCS - (Energy Monitoring and Control System).

1.10.1.3 Protective Coordination Study

A full protective coordination study to include overcurrent and short current analysis shall be done on the electrical distribution system for the building. The study shall include the interior electrical distribution system and primary distribution system back to the existing primary line.

1.10.2 Panelboards

Lighting and appliance branch-circuit panelboards shall be of the circuit breaker conforming to NEMA AB-1 and UL 489 and shall be located in the electrical room.

a. Load-center type panelboards and half size breakers shall not be allowed.

b. Panelboard shall not exceed 78" in height from the finished floor.

c. All panelboards shall have a minimum of 30 percent spare capacity for all loads. Panelboards shall have a minimum of 30 percent spare circuit breakers. Spare circuit breakers shall be redundant of the type of circuit breaker being provided in the panelboard.

d. Panelboard busses shall be tin-plated copper only. Aluminum busses are not acceptable.

e. The phase loading on panelboards shall be balanced as much as practical by the type of loads on the panel. This includes equally disbursing the spares between the phases.

f. All panelboards shall be provided with a panel schedule which is typed and placed in a protective holder located on the front inside of the panelboard door.

g. Panels shall have a hinged door with a master keyed flush tumbler latch.

h. All circuit breakers shall be bolt-on type breakers only. Stab-in breakers shall not be allowed.

1.10.3 Motors

Motors shall be of sufficient size for the duty to be performed and shall not exceed the full-loading rating when the driven equipment is operating at specified capacity under the most severe conditions encountered.

a. All motors shall have open frames and continuous-duty classification and be based on a 40 degree C ambient temperature reference.

b. All motors shall be derated for altitude.

c. All permanently wired polyphase motors of 747 watts or more shall meet the minimum full-load efficiencies as indicated in the Electrical Work, Interior Specification Section 16415a.

d. Power factor correction capacitors are to be installed with individual motors 25 HP and larger as a minimum, unless the motor is controlled by a variable frequency drive (VFD). In the case of VFD, capacitors are not required.

e. Motor starters shall use circuit breakers instead of fuses.

f. Thermal overloads shall be the bimetallic type that can be reset. The magnetic overload option shall only be used if indicated by the manufacturer of the equipment.

g. Reduced voltage starters shall be used on motors which are 60 Hp or larger as a minimum.

h. Motors above 1 HP shall be high efficiency.

i. All three-phase motors shall have phase loss protection.

j. Disconnect switches for motors shall be heavy duty type. Exterior switches shall be rain-tight. Disconnect switches for packaged HVAC equipment shall be as required by HVAC equipment manufacturer.

1.10.4 General Purpose Duplex Receptacle Outlets

Duplex receptacle outlets for general purpose applications shall be 20 amp, 125 volt, 2-pole, 3-wire grounding type. A maximum of five duplex receptacle outlets may be connected to a receptacle circuit in offices and computer rooms; all other locations 8 duplex receptacle outlets maximum per circuit is permitted. Receptacle circuits shall not supply lighting loads. General purpose duplex receptacle outlets shall be located in the facility as follows:

a. Provide general duplex receptacle outlets every 10' along the walls in all areas of the building. For small rooms that do not have 10' walls, a minimum of one (1) outlet shall be installed on each wall. Receptacles shall be mounted 15" above finished floor.

b. Provide a general purpose duplex receptacle outlet adjacent to each mirror for each sink position located in the bathrooms. Where mirrors are located other than above sinks, provide additional receptacles to

accommodate hair dryers. Receptacle outlets shall have (GFCI) ground fault circuit interrupters. Mount receptacle outlets 48" above finished floor.

c. Provide flush floor-mounted duplex receptacle outlets with 2 voice/2 data in open office space. Exact location of all receptacle outlets including Open Office Space shall be verified and coordinated with the USER during the design of the project. Coordinate the location of the receptacle outlets with the Interior Design package (furniture layout) locations for the demountable walls.

1.10.5 Special Receptacles

Ground Fault Circuit Interrupter (GFCI) receptacle outlets shall be provided in all rest rooms, sink countertops, janitor's closet and other wet locations. Weatherproof GFCI receptacles for exterior use, shall be weatherproof whether or not plug is inserted and have a polycarbonate cover plate. Exact location of the receptacles noted below shall be coordinated with the USER during the design of this project. Provide 20 amp,125 volt, 2-pole, 3-wire grounding type, duplex receptacles unless, indicated otherwise below in the following locations:

a. Provide duplex receptacles outlets for all vending machines to be installed by the government in the vending areas.

b. Provide a duplex receptacle outlet for each electric water cooler located in the lobby areas.

c. Provide duplex receptacle outlet for the government furnished and government installed copier and fax machine in locations coordinated with the User. Provide a dedicated receptacle for each copier.

d. Provide a weatherproof duplex receptacle with ground fault circuit interrupter on the exterior of the building adjacent to each personnel exit door of the building. Mount receptacles 24" above finished grade.

e. Provide one (1) dedicated 20 amp, 125 volt duplex receptacle outlet for the EMCS panel. The receptacle provided for the EMCS panels shall have a dedicated branch circuit.

f. Provide three (3) dedicated 20 amp, 125 volt double duplex receptacles for the LAN rack. Receptacle provided for the LAN rack shall have a dedicated branch circuit and ground.

g. Provide one (1) flush ceiling-mounted duplex receptacle to power an overhead projection system (not in contract), and one (1) flush floor-mounted duplex receptacle outlet with LAN connections in all Conference Rooms. In each area, locate the floor and ceiling mounted receptacles in a centralized area. Coordinate exact locations with the conference room table.

h. In Training area (office east of 130), provide LAN and flush floor-mounted duplex receptacle outlets for computer access and portable projection system. Coordinate exact locations with the USER.

i. Provide one (1) wall-mounted cable TV outlet in the following locations: Break Room, Open Office Space, Admininstration Area, Commander's Office, and the large Conference Room (Room 205). Coordinate all locations with the USER.

j. In the Break Room:

- Provide four (4) (GFCI) receptacle outlets in all sink countertops, and other wet locations. Provide one (1) dedicated 20 amp, 125 volt duplex receptacle outlet to accommodate a counter-top microwave oven. Provide two (2) duplex receptacles outlets for a vending machine and refrigerator to be installed by the government. In the second floor break room, provide one (1) dedicated 20 amp, 125 volt duplex receptacle outlet to accommodate a built-in dishwasher.

k. Future SCIF:

- Provide a dedicated duplex receptacle outlet for each computer workstation. Coordinate all receptacle outlet locations with the User. Each receptacle shall be supplied from its own dedicated 20 amp, 1 pole circuit breaker at the lighting panelboard.

- Provide a duplex receptacle outlet for the government furnished and government installed copier and fax machine in locations coordinated with the User. Provide a dedicated receptacle for each copier.

l. Provide two (2) dedicated 20 amp, 125 volt duplex receptacle outlets for the communications terminal backboard. Receptacle outlets provided for the backboard shall have a dedicated branch circuit and ground.

m. Provide a dedicated 20 amp, 125 volt quad-plex receptacle outlet on each wall in each Communications Room. Receptacle outlets shall have a dedicated branch circuit.

1.10.6 Computer Outlets

Computer outlets shall be duplex, 20 amp, 125 volt, 2-pole, 3-wire grounding type receptacles. A maximum of three duplex computer outlets shall be connected to a receptacle circuit. Circuits with dedicated neutral conductors shall be sized using 600 volt-amp per computer. Computer outlets shall be labeled as "COMPUTER". Mount the outlets 15" above finished floor. Computer outlets shall be mounted adjacent to the Telephone/Data outlets. Maintain a separation of 6" from the Telephone/Data outlets. Exact location of all Computer Outlets including Open Office Space shall be verified and coordinated with the USER during the design of the project. Additional computer outlets shall be located in the buildings as follows:

1.10.6.1 Additional Computer Outlet - Locations

Computer outlets shall be located as follows:

a. In Training area (office east of 130), provide LAN and flush floor-mounted duplex receptacle outlets for computer access and portable projection system. Coordinate exact locations with the USER.

b. In the Emulator room, provide LAN access for one computer and dedicated computer outlets for nine computer locations. Coordinate exact locations with the USER.

c. Provide a SIPRNET in the south end of the building on the first floor in the 14TS area. Provide a SIPRNET in the XP office on the second floor of the building. Coordinate all locations with the USER.

ROOM	QUANTITY OF OUTLETS
ADMINISTRATION ROOMS	4
FUTURE SCIF	15
COMMANDER'S OFFICE	2

1.10.6.2 Device Plates

Device plates and receptacle bodies shall be ivory in color. Device plates shall be impact resistant plastic in areas with finished walls. In areas with unfinished walls like mechanical walls, the device plate shall be stainless steel.

1.10.7 Other Loads

Contractor shall provide electrical power to the following loads either by receptacle or direct wired as applicable:

a. Contractor shall provide all power connections, control and conduit as required for the motorized projection screen located in all Conference Rooms.

b. Contractor shall provide a podium with all power connections and controls including LAN access from the podium in all Conference Rooms.

1.10.8 Architectural/Mechanical Connections

Contractor shall provide branch circuits, disconnect switches, magnetic starters, and all other related electrical equipment and material for all architectural, mechanical equipment and environmental equipment to be installed in the project (includes the facility and site). This shall include all hand dryers, HVAC units, unit heaters, pumps, exhaust fans, and all other mechanical equipment in the facility. Urinals, sinks, and blow dryers shall be controlled by passive infrared sensors hard wired to the building electrical distribution system. No batteries shall be allowed for this purpose. Contractor shall coordinate this electrical requirement with the architectural and mechanical requirements.

1.10.9 Portable Generator Connection

Receptacle outlet for BASE portable generator shall be located on the exterior building wall near the Electrical Room. The receptacle outlet shall be sized as required for a 450-500KW generator. The outlet will be mounted next to a manual transfer switch which will allow power to the main panel to be switched between normal and generator power. Coordinate outlet location with BASE personnel.

1.11 INTERIOR LIGHTING SYSTEM

1.11.1 Illumination Levels

Maintained illumination levels shall generally not be less than the values listed in the table below.

ROOM TYPE	INTENSITY (fc)
Mail Room	50
Corridors	15

Electrical; Communications Room	30
Janitor Closet	5
Mechanical Rooms	30
Office Areas	50
Restrooms	30
Conference Rooms	50
Stairways	15
Storage Rooms	5
Vestibule	15

1.11.2 Conservation Requirements

Contractor shall incorporate into the Facility Lighting system Green Technology. Contractor shall optimize building performance by the use of occupancy sensors and the use of sensors to control loads based on the availability of natural light. Illumination levels, in conjunction with energy conservation, shall be obtained by the most life cycle cost-effective techniques including, but not limited to, the following:

a. Provide multiple switching of multi lamp fixtures or multiple switching of fixture groups in large rooms, or both, to permit lighting fixtures to be turned off in unoccupied areas.

b. Provide energy efficient lamps and solid-state electronic ballasts.

c. Occupancy sensors shall be used for locations such as toilets where use would be intermittent and where control would generally be accessible to several individuals or functions. Passive configurations such as infrared sensors are to be used, unless the application is better suited to ultrasonic.

d. Location of light switches shall be coordinated with the floor plan and furniture layout to ensure that they are easily accessible and convenient. Location shall be coordinated with the User.

1.11.3 Fluorescent Fixtures

Fluorescent light fixtures with T8, 34 watt lamps shall be used in all areas of the building. Fluorescent light fixtures in the Conference Rooms, Break Rooms, Mail Room, and Open Office Space shall use 3 lamp, parabolic reflectors with silver finish to reduce glare (type RF12 - Corps. of Engineers Standard Detail Drawings No. D502275E). Offices shall be provided with multi-level switching (33%-66%-100%). Fixtures in other areas such corridors, restrooms, storage, etc. shall be 2 or 3 lamp fluorescent type fixtures with parabolic louvers - silver finish (type RF12 - Corps of Engineers Std. Det. Dwg. No. D502275E). Acrylic lenses shall not be used. Fixtures in utility areas such mechanical rooms, electrical/ communications room, storage rooms, and janitor's closet shall be industrial fluorescent type fixtures with open reflectors. All ballasts shall be of the energy saving electronic type with power factor correction to exceed 90%. Compact fluorescent vanity lights (type WF3 - Corps of Engineers Std. Detail Drawings No. D502275B) shall be installed above each restroom mirror.

Compact fluorescent lighting with dimmable electronic ballasts and dimmer

switches shall be installed in all Conference Rooms. In the large Conference Room (Room 205), provide accent wall sconce lighting. All lighting in this conference room including wall sconces shall be on dimmer switches.

1.11.4 Incandescent Lighting Fixtures

Incandescent lighting fixtures shall NOT be used except for accent lighting applications. Incandescent lamps for accent lighting applications shall be rated for a minimum of 2500 hours.

1.11.5 Egress and Exit Lighting Fixtures

Egress and exit lighting design design shall be in accordance with NFPA 101. Egress and exit lighting fixtures shall be powered from a central battery/inverter system located in the electrical room to meet USER requirement. Exit lights shall be LED (green on white) type XL1 - Corps of Engineers Std. Det. Dwg. No. D502057E. Egress lighting fixtures shall be provided from room fluorescent light fixtures through out the facility.

1.12 INTERIOR COMMUNICATION SYSTEM

Contrator shall provide that the Communications Rooms be centrally located in such a way that each voice/data cable drop shall not exceed 290'. Contractor shall provide a Communications Room on each floor and one above the other with four 4" conduits connecting each Communications Room. In each Communications Room, provide a single quad-plex receptacle outlet on each wall and provide each quad-plex its own dedicated circuit.

The telecommunications (telephone) system design shall comply with NEC Article 800, Corps of Engineers Specifications, TIA/EIA 568B, 569A, 607A, 485A, 644A, 232-F and applicable regulations. The design shall form a complete communications system, including, but not limited to: wires, terminations, raceway, cabinets, and outlets. All LAN/telephone cabling shall be Cat-5e rated and plenum (CL2P), TIA/EIA 568B. The base wiring standard color code is 568B. All interior cabling must be tested to TIA/EIA 607A standards and the test results given to the 50 SCS/SCX. All voice and data cable installed shall be tested and meet standards with results on hard and soft copy turned over to the government.

All interior communication wiring systems shall have the cabling labeled per the Facilities Installation Standard. The label shall also be placed at the corresponding jack on the device plate.

At the point where the exterior cabling enters the interior communciations room, shrink resistance caulking shall be installed around the conduits to prevent any foreign materials from entering the communications room. A record of all communication wiring installed by this contract shall be in format acceptable to the Cable Management Office. For additional guidance see Attachment 5: CABLE MANAGEMENT COORDINATION SHEET.

1.12.1 General

All electronic devices (computers, file servers, hubs, concentrators, phones, etc.) are not part of this contract and will be installed by the USER. Each facility design shall be in accordance with the requirements of this section. Distance limitations for cabling lengths shall be in accordance with the TIA/EIA standards.

Contractor shall provide and install all internal wiring within the facility from the Communications Closets to the workstations data and telephone outlets. Contractor shall install stand alone floor mounted communications racks in each Communciations Room grounded with electrical power on dedicated circuits. Ensure 36" of unobstructed space in front and back of open frame Communications Equipment Racks. Contractor shall terminate and label LAN drops from workstations to a patch panel mounted in the Communications Rack. Contractor shall provide backbone cabling between Communications Rooms consisting of both fiber optic and copper cabling.

1.12.2 Communication Terminal Backboard

Provide a 4 FT x 8 FT x 3/4 IN plywood backboard from wall to wall and floor to ceiling covered with flame retardent paint in each Communications Room. Contractor shall coordinate location of incoming telephone service with the Base Communications Squadron. All underground conduits entering the Communication Room shall be stubbed up 6" above finished floor adjacent to the telephone backboard. At the point where the exterior cabling enters the interior communciations room, shrink resistance caulking shall be installed around the conduits to prevent any foreign materials from entering the communications room. The equipment layout in the Communication Room shall be approved by Base Communications Squadron.

1.12.3 Communications Raceway

The wiring between outlets and the termination points in the Communication Room shall be as described below. For additional guidance see Attachment 5:, COMMUNICATIONS CABLE TRAY AND CONDUIT GROUNDING.

All phone and data wiring shall be routed in conduit or cable tray. Contractor shall install a flexible cable tray system 24" wide x 6" deep. Grounding is required of the flex trays, communication cabinets, and the conduits in the ceiling. Trays shall have a rung/wire spacing suitable for Category-5e cables and have a 20% spare capacity. Conduits shall be mounted from outlets up to ceiling area (above suspended ceilings in applicable rooms). Conduits shall be routed inside the walls of room with finished walls.

Cable trays shall be provided in the ceiling area above the cabinets and wall-mounted cross connect blocks in the Communication Room. Sizing shall include the 20 percent spare capacity. Cable trays shall not penetrate Sensitive Compartmented Information Facilities (SCIF) or restricted access area walls. Convert the cable tray to conduits of equivalent capacity prior to entering a SCIF or restricted access area.

1.12.4 Telephone/Data(LAN) Conductors

The copper cables(voice) shall be 24 gauge, 150 pair cable that can support Cat-5e unshielded twisted pair (UTP), plenum rated, solid copper station cable standards. Voice Cat-5e cable shall have white sheath and terminate in Communications Room on wall mount Cat-5e 110 blocks using guide wires and Cat-5e wall jacks on wall plates located at end user locations. Data Cat-5e cable shall have blue sheath and terminate in Communications Room on rack mounted Cat-5e patch panels using wire guides and Cat-5e wall jacks on wall plates located at end user locations. The fiber optic cable(data) shall be single cable consisting of 6 single mode/12 multimode (or 12sm/24mm) fibers. Both ends shall have ST connectors installed with ceramic/Zirconia ferral and metal body.

All cables including patch cords shall be U.L. tested at a minimum of 155 MHz operation. Extrapolation from a lower frequency is not allowed. The installation acceptance test shall be a "channel test" and includes all patch connections and cables. Testing shall be accomplished with a Cat. 5e, Level 2 compliant, time domain reflectometer. Cables are dedicated to one device/jack i.e. no daisy chaining. Cable numbering will be provided by the Communication Squadron.

1.12.5 Telephone/Data(LAN) Outlets

The outlets shall be at minimum the standard wall jacks consisting of two LAN and two telephone jacks. Each outlet shall be RJ-45, eight pin. Contractor shall locate outlets in the office areas two voice/two data jacks on every wall, and in the conference rooms and open office space two voice/two data jacks every 5'-10' along the wall. Telephone and data (LAN) cables are not allowed to be visibly exposed along wall or ceilings except in the Communications Room. Therefore, ensure there is a conduit patch or open area (above a suspended ceiling or below raised floor), which allows the signal and communication cable and/or conduit to get from the outlet to the termination point. The cable tray shall be used to distribute the telephone and LAN wiring throughout the facility. The tables below show additional quantity requirements for telephone outlets.

Provide a secure communications telephone line (STU) in the Commander's Office on the first floor in the 14TS and the 7SOPS areas. Provide a STU in the XP Office and the Group Commander's Office on the second floor.

All telephone (CAT 5e) cable drops and RJ-45 (CAT 5e) jacks located in the future SCIF areas shall terminate on CAT 5e supportable 110 blocks located on a telephone terminal board in the VTC Computer Room. Telephone outlets located outside the SCIF area shall terminate on CAT 5e supportable 110 blocks located on a telephone terminal board in the Communications room. Telephone cables passing thru the SCIF area from outside the SCIF area shall be in conduit. Provide conduit for a future single wall telephone outlet mounted 54 inches at SCIF doors connected to personnel in the SCIF to allow unauthorized personnel to gain access.

Wall-mounted phone shall be 60" AFF, desk use phone/outlet shall be 18" AFF. All Telephone/data outlets locations shall be coordinated with the interior design package to include the furniture layout. The Communications Squadron shall have final approval on the location of the outlets.

TELEPHONE OUTLETS ONLY.

ROOM NAME	**QUANTITY OF OUTLETS**
BREAK ROOM (1st floor)	1 wall-mounted
BREAK ROOM (2nd floor)	1 wall-mounted
MECHANICAL ROOM	1 wall-mounted
ELECTRICAL ROOM	1 wall-mounted
COMMUNICATION ROOM (1st floor)	1 wall-mounted
COMMUNICATION ROOM (2nd floor)	1 wall-mounted
STORAGE ROOM (124)	1 wall-mounted
STORAGE ROOM (125)	1 wall-mounted
LOBBY (1st floor)	1 wall-mounted

1.12.6 Cross Connect Blocks

Cross connect blocks shall be the Category-5e, 110 type. The telephone cross connect blocks shall have stand-off brackets and shall be wall mounted in the Communications Room. Each 4-pair telephone shall terminate on its own terminal on the 110 block. Provide the necessary quantity of blocks to accomplish this plus provide one additional block for future connections. Communications racks shall be purchased by Contractor per Base Communications Specifications and installed at locations determined by Base Communications.

1.12.7 Patch Panels

The LAN (Data) cables shall terminate on 24-port rack-mounted patch panels located in the Communications Room. The size of the patch panel shall be coordinated with the cabinet. The quantity shall be coordinated with the number of 4-pair cables required. Communications squadron to provide rack information.

1.12.8 Satellite Support

Provide a 2" roof penetration and galvanized, rigid steel conduit which runs from the Communications Room to area of roof above Communications Room for satellite TV or Land Mobile Radio. The conduit shall terminate at a weatherproof junction box on roof. Provide pull cord and extend conduit 6" into Communications Room and cap.

1.12.8.1 TELEVISION (CATV)

Contractor shall provide a flush mounted receptacle outler 6" below ceiling for all wall-mounted CATV locations. Refer to the Interior Design drawing sheets I1.01 and I1.02 for general locations for CATV. The location of the outlets shall be coordinated with the interior design package (furniture layout) and shall be approved by Schriever AFB personnel.

The CATV shall have all conduit, junction boxes, and a quad shield RG-6 coaxial 75-ohm cable, and terminators for a complete and usable system in accordance with the guidance herein and with the requirements given in UFGS 16710. The cables shall be homerun to the nearest Communications Closet. NO DAISY CHAINING ALLOWED. Each cable is dedicated to a single outlet. Cables shall be terminated in the nearest Communications Closet with F-Type connectors and each cable shall have a minimum excess length of 6ft. The single-gang, outlet junction box for the jacks shall be sized in accordance with the requirements of UFGS 16710 and 16794. The CATV jacks shall be F-Type, female connectors. The 3/4" conduit from the outlet box shall terminate 8" above the suspended ceiling. In areas where this isn't a suspended ceiling, the conduit with pull junction boxes per UFGS 16710 shall be provided to a point 6" into an area. CATV cables are not allowed to be visibly exposed along wall or ceilings except in the communications room. Two duplex receptacles are required in the Communications Rooms to support the CATV equipment.

All interior communication wiring systems shall have the cabling labeled with a unique alpha-numeric number at beginning and end termination points of the cable.

1.14 PUBLIC ADDRESS (PA) SYSTEM

Contractor shall verify and test to ensure that the PA system will be compatible, interface, and operate with the Schriever AFB PA system. The

public address system shall have all conduit, junction boxes, and Category-5e shielded pair plenum wiring (24 AWG) for speakers, Category-5e 110 blocks, speakers, grilles, amplifiers, etc. for a complete and usable public address system in accordance with the guidance herein and with the requirements given in UFGS 16770. The speaker cables shall terminate on cabinet-mounted 110 blocks located in the Communications Room. The physical size of the blocks shall be coordinated with the cabinet. The quantity shall be coordinated with the number of cables required. Each speaker cable shall terminate on its own terminal at the 110 blocks. All power required for the system shall be supplied. Public address system cables are not allowed to be visibly exposed along wall or ceilings except in the communications room. The speakers inside the facility are ceiling mounted in the ceiling tile.

All areas throughout the building are to have a PA system. Contractor shall provide the exact location for the speakers for approval by the Government. Design/Build Contractor shall ensure obstructions are not present which would prevent or hinder the installation of the speakers, conduit and wiring. The amplifiers for the public address system shall be supplied and installed in the Communications Room.

All interior communication wiring systems shall have the cabling labeled with a unique alpha-numeric number at beginning and end termination points of the cable.

1.13 EMCS (ENERGY MONITORING AND CONTROL SYSTEM)

The building shall be wired for EMCS (Energy Monitoring and Control System). All EMCS sensors will be installed per Mechanical specifications. See Mechanical SECTION 01006 for EMCS options and requirements. Provide 62.5 micron, duplex, multi-mode fiber optic cable in 3/4" conduit from each DDC panel to the patch panels located in the Communications Room. Provide power as required for all EMCS or DDC components (such as dampers, VAV boxes, control panels, etc.) requiring power.

1.14 BALANCED MAGNETIC SWITCHES

Contractor shall install empty conduit system for balanced magnetic switches (BMS) that will be located on all exterior doors. Contractor shall also provide empty conduit and junction box at each exterior door for a keypad. Contractor shall provide conduit rough-in for door strikes. Switches, keypads, and associated wiring shall be provided and installed by BASE. In architecturally finished areas, all conduit for the BMS will be routed inside walls and recessed junction box with cover plate shall be installed directly above door frame and directly above location of BMS. In non-finished areas, a surface mounted junction box with cover shall be located at each BMS location. Conduits from each exterior door BMS location shall be routed back to a junction box in the electrical room. A single conduit shall be routed from junction box in electrical room down to a weatherproof junction box on exterior building wall, accessible at grade level. The exterior junction shall be provided with a cover tamper switch mounted on interior side of junction box hinged cover. Size conduits and junction boxes as required based on coordination with BASE. Provide wiring and conduit for interior door to the future SCIF for sensor controlled access for entry.

1.15 GROUNDING SYSTEM

The grounding system shall be designed in accordance with NEC Article 250

and the following criteria. In general, all metallic building components including reinforcing steel and miscellaneous metals shall be part of an electrically continuous ground system. Steel studs used in interior wall , T bars of the ceiling grid, diffusers of the air distribution system, and door hardware are exempt from this bonding requirement. Bonding shall be by exothermic welding or the brazing of a copper wire between components. All ground rods on the project shall be 3/4" x 10' copper clad steel.

1.15.1 Communication Grounding System

All exposed non-current carrying metallic parts of the telephone equipment, cable sheaths, cable splices and terminals shall be grounded. Contractor shall provide a 12" x 1/4" grounding bar along each wall in each Communications Room and communications entry point. The bars shall be connected together by #1/0 AWG insulated copper cable. The ground system for the Communication Room shall be interconnected with #1/0 AWG insulated copper cable in 1" PVC conduit. The grounding system in Communications Room shall be bonded to a dedicated ground rod located outside which in turn is bonded to the ground ring (counterpoise) for the facility. Use #1/0 AWG copper grounding conductor in 1" conduit from the ground bus (located in the Communication Room) to the building service ground.

1.15.2 Equipment Grounding Conductors

A green equipment grounding conductor, sized in accordance with NFPA 70 shall be provided, regardless of the type of conduit. Equipment grounding bars shall be provided in all panelboards. The equipment grounding conductors shall be carried back to the service entrance grounding connection or separately derived grounding connection. Equipment grounding conductors shall be provided in all branch including lighting circuits and feeders circuits.

1.15.3 Earth Electrode System

The maximum resistance measured of the each electrode system shall not exceed 5 ohms under normally dry conditions. Ground rods shall be 3/4" x 10' copper clad ground rods.

1.15.4 Separately Derived Systems

For dry-type transformers within buildings, the grounding electrode conductor shall be connected to adjacent structural steel per NEC. If there are multiple dry-type transformers within a room, a copper ground bar shall be used as the connection point. This bar shall be bonded to the building ground ring via a ground rod located outside. The grounding bar and the conductor connecting the bar to the ground ring shall be sized to handle the combined fault duty of the equipment connected. Use exothermic welds for the connection. Backup generators that can assume building loads, interconnect with the service ground. Verify that connections are located so that any service ground fault equipment will operate as intended (one neutral bond or 4-pole transfer switches, etc).

1.16 LIGHTNING PROTECTION SYSTEM

NFPA 780, Appendix H - Risk Assessment Guide conducted for this building indicates a risk (R) of 5.5 which is in the moderate to severe category. Based on this assessment, the Contractor shall provide a lighting protection system in accordance with NFPA 780. Lighting protection system provided shall include (but not limited to) 18" air terminals at 20'

spacing, main conductors, down conductors, bonding conductors, and 3/4" x 10' copper clad steel ground rods interconnected by a counterpoise routed around the perimeter of the building. In addition to the ground rods, 4 ground wells (one at each corner of the building) shall be provided for test purposes. All conductors shall be copper, except that aluminum or bronze may be used for connection to mechanical aluminum housings. All connections below grade, to main conductor and down conductors shall be by exothermic weld process. Alternate bonding methods will be allowed to metal bodies (vent hoods, exhaust stacks . . .) which have light enough weight to make exothermic welds impractical. Down conductors shall be concealed in PVC conduit. The lightning protection system shall be a concealed system.

1.17 FIRE DETECTION AND ALARM SYSTEM

The fire detection and alarm system requirements are provided in Fire Protection SECTION 01008 and herein. Fire alarm system shall be addressable to each device. Hybrid systems which have addressable loops are NOT acceptable. All alarms/status conditions for each device shall report/sound/flash local to the facility and also report back to the BASE Fire Station. Contractor shall provide all programming required at the facility and at the BASE Fire Stations.

1.18 EQUIPMENT SIZING REQUIREMENTS AND RATINGS

Required capacity of the equipment bus shall be computed from the estimated maximum demand for the panelboard, switchboard, and specified as the next larger manufactured standard bus or main lug size. Overcurrent protection for panelboards, switchboards, switchgear and motor control centers with heavy motor loads, sizing must also consider starting current of the largest motor or motors in addition to the continuous demand amperes.

1.18.1 Interrupting Capacities

Equipment ratings shall be determined based on results of the short circuit analysis. Minimum standard interrupting ratings shall be identified on the plans preferably on a one-line diagram or alternately in panel schedules. Ratings may be called out in the specifications when single items are involved. The designer shall identify variables (such ad equipment impedances) which could affect available short circuit current and verify that equipment acceptable under contract plans and specifications would not permit fault current levels higher than the specified interrupting ratings.

1.18.2 FEEDERS AND BRANCH CIRCUITS

Feeders to distribution equipment such as panelboards, motor control centers, and switchboards shall be sized to allow the full capacity of the panelboards, motor control centers, and switchboards bus bar amperage rating to be used. Voltage drop shall be taken into account when sizing branch circuits.

1.18.2.1 Transformer Feeders

Sizes for primary and secondary feeders for transformers shall be based on the transformer kVA. This criteria also applies to the service entrance conductors.

1.18.2.2 Neutral Sizing

Use of full size neutrals shall be standard practice. For all applications involving discharge type lighting (fluorescent, HID) or other harmonics generating equipment (inverter, variable frequency drives, other solid state apparatus), the neutral must be treated as a current carrying conductor. In data processing applications including personal computers, the neutral must be sized larger than the phase conductors. Size the neutral at 133 percent minimum (of the phase conductors) unless a harmonic analysis or field data demonstrates that a smaller size would be adequate. Multi-wire branch circuits with oversized neutrals shall not share a common neutral, but will have an individual neutral for each phase conductor.

1.18.2.3 Derating

Ampacity of conductors is to be derated per NEC Article 310, if more than three current carrying conductors are installed in a raceway. Four wire feeders where neutral is considered a current carrying conductors shall have an additional 80% derating. A maximum of nine current carrying conductors, using NEC designated derating factors, shall be installed in any raceway. When nonlinear loads are service, the neutral must be treated as a phase conductor. If a double size neutral is employed, count it as two line conductors.

1.18.2.4 Parallel Runs

Use of bus duct should be considered in lieu of parallel runs of cable when required ampacity is at or above 800A. Parallel runs of cable shall be limited to a maximum of 4. Equipment grounding conductors in each leg must be sized to carrying the total fault current based on the rating of the upstream overcurrent device.

1.18.3 Nuisance Tripping

For a period of one year after construction, the contractor shall be responsible for correcting problems which may arise from nuisance tripping. Nuisance tripping shall be defined has having breakers or fuses activating under an overload condition while the equipment was being operating within manufacturer parameters. These situations shall be corrected by making changes to the installation at no cost to the Government. These corrections can be increasing the trip setting or ruse size, as long as the increased setting is still at or below setting maximums given in NFPA 70. Any change could impact other items not listed such as conductor sizing and upstream coordination settings.

1.18.4 Installation

The Contractor shall install all system components including Government furnished equipment, and appurtenances in accordance with the manufacturer's instructions and shall furnish all necessary connectors, terminators, interconnections, services, and adjustments required for a complete and operable system. All interior wiring, including low voltage wiring shall be installed in steel conduit. Minimum conduit shall be 1/2 inch. Flexible cords or cord connections shall not be used to supply power to any components, except where specifically allowed in writing by the Government. Grounding shall be installed as necessary to preclude ground loops, noise, and surges from adversely affecting system operation. The installation wiring shall use terminal strips only; wire nuts or crimp terminals shall not be permitted. Devices shall use terminal points, strips or screw terminals for the wiring connections points - pigtail

connections are not acceptable. If the manufacturer needs to use special cable e.g. twisted and shielded, then the wire size minimum and insulation voltage rating shall as a minimum be met.

PART 2 NOT USED
PART 3 NOT USED

-- End of Section --

This page was intentionally left blank for duplex printing.

SECTION TABLE OF CONTENTS

DIVISION 01 - GENERAL REQUIREMENTS

SECTION 01008

FIRE PROTECTION REQUIREMENTS

PART 1 FIRE PROTECTION REQUIREMENTS

1.1 GENERAL PARAMETERS
1.1.1 Types of Occupancies and List of Hazardous Areas/Essential Equipment
1.1.1.1 Occupancy Classification
1.1.1.2 Classification of Hazard of Contents
1.1.2 Separation of Structures
1.1.2.1 Exposure Classification
1.1.2.2 Separation Distance in Feet
1.1.3 Fire Fighting Support
1.2 FUNCTIONAL AND TECHNICAL REQUIREMENTS
1.2.1 Construction for Fire Resistances of the Building Including Roofs, Walls, and Doors.
1.2.1.1 Building Construction Type
1.2.1.2 Exterior Walls
1.2.1.3 Roof
1.2.1.4 Interior Walls
1.2.2 Type of Occupancies, Occupant Loads, Exits, and Travel Distances to Exits
1.2.2.1 Occupancies
1.2.2.2 Occupant Load
1.2.2.3 Means of Egress
1.2.2.4 Travel Distance to Exits
1.2.2.5 Allowable Floor Area
1.2.2.6 Maximum Building Height
1.2.3 Fire Extinguisher Cabinets
1.2.4 Sprinkler Systems
1.2.5 Fire Department Connections and Fire Hydrants
1.2.6 Resistance to Interior Finishes and Materials to Flame Spread and Smoke Development
1.2.6.1 Interior Finishes
1.2.6.2 [Enter Appropriate Subpart Title Here]
1.2.6.3 Floor Finishes
1.2.7 Fire Alarm and Detection System
1.2.7.1 Panel Location
1.2.7.2 NFPA 13 and NFPA 72 Requirements
1.2.7.3 Other Requirements
1.2.7.4 Alarm Verification
1.2.7.5 Indicating Devices
1.2.7.6 System Design
1.3 DESIGN OBJECTIVES AND PROVISIONS
1.3.1 Zoning and Treatment of Each Potential Hazard
1.3.1.1 Walls
1.3.1.2 Limiting Fire Spread
1.3.1.3 Fire Alarms and Extinguishing Systems
1.3.2 Provision and Maintenance of an Unobstructed Emergency Egress System.

1.3.3 Dead Ends
1.3.4 Egress Locations
1.3.5 Outside Exit Doors
1.3.6 Required Fire Exits

PART 2 NOT USED

PART 3 NOT USED

-- End of Section Table of Contents --

SECTION 01008

FIRE PROTECTION REQUIREMENTS

PART 1 FIRE PROTECTION REQUIREMENTS

1.1 GENERAL PARAMETERS

Fire protection shall be based on sound fire protection engineering principles that gives safeguards against loss of life and property by fire, consistent with the mission, risk involved, and economical utilization. The latest edition of the following standards and codes in effect and amended as of date of supplier's proposal, and any subsections thereof as applicable, shall govern design and selection of equipment and material supplied:

International Building Code (2000 Edition)
NFPA 101 (Life Safety Code, 2000 Edition)
NFPA 72 (National Fire Alarm Code, 1999 Edition)
NFPA 13 (Installation of Sprinkler Systems, 1999 Edition)
Unified Facilities Criteria (UFC 3-600-01, 2003 Edition)
UL 864 Control Units for Fire-Protective Signaling Systems (1996)

All applicable requirements of the aforementioned codes shall be incorporated into the design. Life Safety Code, NFPA 101 relative to this design shall give special attention to the application of fire codes as they relate to Life Safety. Features of fire protection based on the following shall be included in the design: automatic operating devices; exiting for inhabitants and the protection of egress components; personnel safety in hazardous areas; appropriate ratings of partitions, doors and windows; travel distances; common paths of travel; occupancy types; hazard of occupancies and their contents; isolation from the remainder of the facility; etc.

Applicable requirements of the International Building Code shall also be included in the design. These shall include the following: Types of construction; Fire area limitations; increases to allowable floor areas; separation of structures.

All military construction must comply with the code requirements set/forth in UFC 3-600-01.

1.1.1 Types of Occupancies and List of Hazardous Areas/Essential Equipment

1.1.1.1 Occupancy Classification

This project consists of one building. The building shall be a Business Occupancy in accordance with NFPA 101. According to the International Building Code (IBC), the building shall be classified as "Group B 2" occupancy in accordance with Chapter 3.

1.1.1.2 Classification of Hazard of Contents

The classification of hazard of contents shall be determined by the portion of each building which has the greatest hazard.

1.1.2 Separation of Structures

1.1.2.1 Exposure Classification

The building construction is a two-story structure with optional crawl space. The types of non-combustible roof construction options available for each facility shall be determined by the Proposer.

1.1.2.2 Separation Distance in Feet

IBC, Table 602 requires a separation of 5 feet for a one-hour wall, and no requirement if greater than 30 feet.

1.1.3 Fire Fighting Support

The main fire fighting support shall be supplied by an automatic wet pipe sprinkler system. This fire protection and suppression system shall be tied into the building's fire detection and alarm system. The building shall be provided with fire extinguisher cabinets. These shall be located so that not more than 75 feet of travel distance between fire extinguisher cabinets shall be required at any point in the facility. The fire extinguisher cabinets shall be of the fully recessed type in all finished areas.

In addition a zoned fire alarm system shall be provided that covers the various parts of the building, monitoring of the sprinkler system, air handling units, etc..

See subsequent paragraphs of this Fire Protection section for additional information regarding fire suppression, detection, and other aspects of fire fighting support. Fire extinguishers are to be Contractor furnished/Contractor installed.

1.2 FUNCTIONAL AND TECHNICAL REQUIREMENTS

1.2.1 Construction for Fire Resistances of the Building Including Roofs, Walls, and Doors.

1.2.1.1 Building Construction Type

The building shall comply with a minimum Type II-B in accordance with IBC, Table No. 601.

1.2.1.2 Exterior Walls

Exterior walls of the facilities shall be permitted to be non-combustible, non-rated as long as minimum distances from other buildings are maintained.

1.2.1.3 Roof

The building roof covering shall be Factory Mutual Approved or classified by Underwriter's Laboratory as Class A, roof system.

1.2.1.4 Interior Walls

One hour fire resistive walls shall be constructed around stair enclosures, elevators, separate janitor's closets, mechanical rooms, electrical rooms, and communications rooms per NFPA 101, from other parts of the buildings. All penetrations in fire rated walls (conduits, pipes, cable trays...etc.)

shall be fireproofed according to their respective wall/floor/ceiling rating (sealed) at each penetration.

1.2.2 Type of Occupancies, Occupant Loads, Exits, and Travel Distances to Exits

1.2.2.1 Occupancies

The facility shall be considered a storage occupancy in accordance with NFPA 101, Chapter 38.

1.2.2.2 Occupant Load

For purposes of determining required exits, the occupant load shall be based upon the maximum number of persons intended to occupy that space but not less than that required by NFPA 101.

1.2.2.3 Means of Egress

Not less than two exits shall be accessible from every part of the facility.

1.2.2.4 Travel Distance to Exits

Allowable travel distance limits to exits shall be per NFPA 101, chapter 38.

1.2.2.5 Allowable Floor Area

Allowable floor area limitations shall be in accordance with IBC, Table 503 and Section 506 and 507. Proposer shall determine construction type and apply the applicable portion of this code requirement. However, it is required that the building, be provided with 100% automatic sprinkler coverage.

1.2.2.6 Maximum Building Height

Maximum height limitations are outlined in IBC, Table 503.

1.2.3 Fire Extinguisher Cabinets

Fire extinguisher cabinets shall be provided per NFPA 10 with a travel distance between fire extinguisher cabinets not to exceed 75 feet. Fire extinguisher cabinets shall be fully-recessed in finished areas, such as administrative, conference, corridors, etc.. Fire extinguishers shall be part of this contract.

1.2.4 Sprinkler Systems

Sprinkler systems shall be provided for 100% coverage and shall be a wet pipe sprinkler system. System design shall be in accordance with NFPA 13 and UFC 3-600-01. Provide post indicator valve (PIV) with tamper switch on water main service to building. Provide horizontal double check backflow preventer on water service inside building.

The office area for this building is to be designed for Light Hazard, and will be sprinkled in accordance with NFPA 13 and UFC 3-600-01. Include hose stream in accordance with UFC 3-600-01. Note that the area of demand shall be 3,000 square feet. Areas of the building that is not office space shall have a sprinkler density comenserate with the hazard. Plastic piping will not be permitted for the sprinkler system.

Provide hose stream in accordance with UFC 3-600-01.

The Schriever AFB main water plant in Building 421/422 has four domestic water pumps (maximum three operational with one on standby), two 1000 GPM/132 PSI electric fire pumps, and one 1500 GPM/132 PSI diesel fire pump.

Contractor shall perform fire flow readings and base fire sprinkler design on contractor's results.

Contractor shall not base design on activation of Building 421/422 fire pumps. Contractor shall evaluate the ability of the domestic water pumps in Building 421/422 to satisfy the fire sprinkler demand in the building. If the domestic water pumps cannot handle the fire sprinkler demand, a fire pump dedicated to the new Consolidated Space Group Operations Facility will be included.

1.2.5 Fire Department Connections and Fire Hydrants

Fire Department connections for the sprinkler system(s) shall be provided with suitable all weather access for pumper apparatus within 150 feet, reference UFC 3-600-01. A minimum of one fire hydrant shall be located within 150 feet of the fire department connections. Fire Department Connection (FDC) shall be provided remote(outside) from the facility, location to be coordinated with the User.

1.2.6 Resistance to Interior Finishes and Materials to Flame Spread and Smoke Development

1.2.6.1 Interior Finishes

Interior finish materials on walls, ceilings, and partitions in all exits shall be Class A as defined in NFPA 101 and UFC 3-600-01. All other areas shall have Class A or B interior finish materials for walls, ceilings, and furnishings.

1.2.6.2 [Enter Appropriate Subpart Title Here]

1.2.6.3 Floor Finishes

Floor finishes shall be Class I or Class II. Carpet and other floor finishes shall have passed the acceptable criteria of American Society for Testing and Materials (ASTM) standard 84 or equivalent.

1.2.7 Fire Alarm and Detection System

The fire alarm and detection system shall be compatible with and tied into the existing BASE system. Existing base system is by Honeywell. Consolidated Space Group Operations Facility fire reporting system shall be a Honeywell XLS system, with all system programming, data base, and graphics by Honewell, Inc. The entire facility shall have automatic fire detectors designed in accordance with NFPA 72 and NFPA 101. Manual pull stations shall be provided and located in accordance with NFPA 101. Supervisory initiating devices shall be provided and designed in accordance with NFPA 13 and 72. Placement of audio/visual devices shall comply with the Americans with Disabilities Act (ADA), paragraph 4.28 and NFPA 72, Chapter 6. Use the most stringent requirements from ADA or NFPA 72 where conflicts occur. Outside electric bell for sprinkler system(s) shall also be provided with a visual strobe. The facility shall be provided with a

main control panel. A Graphic Annuciator at the Consolidated Space Group Operations Facility is required. Fire alarm system shall be addressable to each device. Hybrid systems which have addressable loops are NOT acceptable. The main building fire alarm panel shall be located on a wall near the main entrance door. All alarms/status conditions for each device shall report/sound/flash local to the facility and also report back to the BASE Fire Department. Contractor shall provide all programming required at the Consolidated Space Group Operations Facility and at the BASE Fire Department to accommodate the Consolidated Space Group Operations Facility fire detection and alarm system.

1.2.7.1 Panel Location

The Main Fire Alarm control panel shall be located on a wall near the main entrance. A Graphic Annuciator at the Consolidated Space Group Operations Facility is required. Graphic Annunciator shall show complete building outline with all areas delineated. LED's shall be used on the Graphic Annunciator to show all alrm devices. Final location of the Main Fire Alarm control panel shall be coordinated with the BASE Fire Marshal.

1.2.7.2 NFPA 13 and NFPA 72 Requirements

Provide control modules, smoke detectors, heat detectors, OS&Y tamper switches, PIV valve tamper switch, and water flow switches as required by NFPA 13 and NFPA 72.

1.2.7.3 Other Requirements

Provide duct detectors, manual pull stations, flow switches, tamper switches, notifications appliances, etc.. The notification appliances shall be with flashing strobe.

1.2.7.4 Alarm Verification

The system shall be provided with alarm verification features. The alarm verification features shall reduce false alarms due to transient conditions. The alarm/activation delay shall be adjustable from 0 to 60 seconds.

1.2.7.5 Indicating Devices

Evacuation indicating signalling devices shall be provided and designed in accordance with NFPA 101. Evacuation alarms shall be activated by a smoke detector, a manual pull station, or a flow switch.

1.2.7.6 System Design

The fire alarm system shall be a complete, supervised fire alarm reporting system. The system shall be activated into the alarm mode by actuation of any alarm initiating device. The system shall remain in alarm mode until the initiating device is reset and the fire alarm control panel is reset and restored to normal. Other system operational features include, but are not limited to, one person test mode, electrical supervision for circuits used for supervisory signal services (i.e., sprinkler systems, valves, etc.), supervised addressable relays for HVAC shutdown, and battery backup power. Wiring system shall be a looped Class A system.

The Main Fire Alarm Control Panel shall comply with the requirements of UL 864. The control panel and field panels shall be software reprogrammable

to enable expansion or modification of the system without replacement of hardware or firmware. The fire alarm panel shall monitor the fire sprinkler system and other fire protection extinguishing system.

The equipment specified herein for the Consolidated Space Group Operations Facility shall operate as an extension of the existing base configuration. Existing base fire alarm equipment shall be expanded, modified, or supplemented as necessary to extend the existing monitoring functions to the new points or zones. New components shall be capable of merging with the existing system without degrading the performance of either system. Fire alarm panel shall connect to existing based system via two fiber optic cables with 6 fibers each (multimode) routed in conduit underground. Coordinate this connection point with the base.

1.3 DESIGN OBJECTIVES AND PROVISIONS

1.3.1 Zoning and Treatment of Each Potential Hazard

1.3.1.1 Walls

All areas where a potential hazard exists greater than that of the primary occupancy, shall be separated from the primary occupancy by walls having not less than 1-hour fire resistive construction.

1.3.1.2 Limiting Fire Spread

Every horizontal opening, and hazardous location as defined by NFPA 101 shall be protected.

1.3.1.3 Fire Alarms and Extinguishing Systems

The facilities shall be provided with a fire suppression system and a detection system as indicated previously.

1.3.2 Provision and Maintenance of an Unobstructed Emergency Egress System.

All corridor widths, clear space requirements relative to exit doors, etc., shall be in accordance with the Uniform Federal Accessibility Standards for unobstructed egress.

1.3.3 Dead Ends

Maximum dead ends shall be as per NFPA 101.

1.3.4 Egress Locations

Egress locations shall be marked with exit signs per NFPA 101.

1.3.5 Outside Exit Doors

Doors for outside exit doors shall swing in the direction of exit travel. Outside exit doors shall be equipped with panic hardware mounted 44 inches above the finish floor and have a minimum clear width of 34 inches to allow for egress.

1.3.6 Required Fire Exits

Required fire exits from the building shall lead to a public way or to a

clear safe area at a minimum distance of 75 feet from the building.

1.3.7 Standpipe System

Provide a dry standpipe for each stair. Standpipe to be sized in accordance with NFPA 14. Fire Department connection (for standpipe)to be provided remote from building at a location approved by the User.

PART 2 NOT USED

PART 3 NOT USED

-- End of Section --

This page was intentionally left blank for duplex printing.

SECTION TABLE OF CONTENTS

DIVISION 01 - GENERAL REQUIREMENTS

SECTION 01040

AS-BUILT DRAWINGS

10/02; Rev 01/03

PART 1 GENERAL

1.1 DEFINITIONS
1.1.1 Red-Line Drawings
1.1.2 As-Built Drawings
1.1.3 Vellum Drawings
1.1.4 Black-Line Drawings
1.1.5 Full-Size Drawings
1.1.6 Half-Size Drawings
1.1.7 Modification Circle
1.1.8 Mylar Drawings
1.1.9 Electronic CADD Files
1.1.10 Accepted Design Drawings
1.2 GENERAL REQUIREMENTS
1.3 PAYMENT
1.4 TRANSMITTAL OF AS-BUILT DRAWINGS
1.4.1 Preliminary As-Built Drawings
1.4.2 Final As-Built Drawings
1.4.3 As-Built Preparation
1.4.3.1 Not Used
1.4.3.2 For AutoCADD (*DWG) Files
1.5 PROCEDURE
1.6 TITLE BLOCKS
1.7 PROCEDURES FOR POSTING MODIFICATION CHANGES TO DRAWINGS
1.8 WORD ABBREVIATIONS
1.9 LEGEND SHEETS
1.10 CONTRACTOR SHOP DRAWINGS
1.11 INDEXING OF DRAWINGS

PART 2 PRODUCTS (NOT APPLICABLE)

PART 3 EXECUTION

3.1 GENERAL
3.2 SITE WORK
3.2.1 Utilities
3.2.2 Structures
3.2.3 Grades
3.3 STRUCTURAL
3.3.1 Steel
3.4 MECHANICAL
3.4.1 Ductwork
3.4.2 Plumbing
3.5 ELECTRICAL
3.5.1 PANELS

3.5.2 Controls

-- End of Section Table of Contents --

SECTION 01040

AS-BUILT DRAWINGS
10/02; Rev 01/03

PART 1 GENERAL

1.1 DEFINITIONS

The definitions listed below form a part of this specification.

1.1.1 Red-Line Drawings

Accepted design drawings marked-up to show actual work performed to include necessary sketches, modification drawings, shop drawings and notes. Green ink is used to indicate work deleted from the contract. Red ink is used for additions and deviations from the contract.

1.1.2 As-Built Drawings

Professional finished vellum drawings and electronic CADD files developed from the accepted design drawings that include all of the information from the redline drawings and suitable for half-size reproduction.

1.1.3 Vellum Drawings

Drawings on erasable Vellum 20# similar or equal to Xerox Zero solvent vellum.

1.1.4 Black-Line Drawings

Paper drawings reproduced from electronic CADD files or high quality reproducible drawings.

1.1.5 Full-Size Drawings

28 inches x 40 inches nominal size drawings with all details visually readable.

1.1.6 Half-Size Drawings

14 inches x 20 inches nominal size drawings with all details visually readable.

1.1.7 Modification Circle

A circle with a horizontal line through the center. The top half will contain the letter "P" with the bottom half containing the Modification number. The lettering standard will be 120/6 WRICO or similar.

1.1.8 Mylar Drawings

Drawings on polyester film, 3 or 5 mil, similar or equal to K & E Stabilene.

1.1.9 Electronic CADD Files

Electronic CADD files are files saved on CD-ROM in accordance with appropriate CADD standard. The CADD standard will include level on/off status, special characters, line wieghts, font, and size requirements.

1.1.10 Accepted Design Drawings

Construction set of complete design drawings, which have been accepted by the Government, for the construction phase of the contract.

1.2 GENERAL REQUIREMENTS

The work includes creation of vellumdrawings and electronic CADD files on AutoCADD 2002 for as-built drawings to accurately depict existing conditions of the project. As-Built Drawings will become the permanent record drawings of the construction. The Contractor is responsible for development of electronic CADD files in accordance with Omaha DistrictCADD standards Omaha District AutoCADD Standards will be made available to the successful offeror. AutoCADD Standard utilize the National CAD standards with Omaha District refinements concerning file names, layers, colors, line widths, details and symbols. See requirements in this section for a summary of Omaha District file format and font requirements. The Contractor shall be responsible for furnishing the required CAD software. The As-Built drawings shall include all major features of the work and all details to the same level as the accepted design set of drawings. All changes from the accepted design drawings, including but not limited to all deviations, additional information, and modifications to the contract. Where accepted design drawings or specifications allow for options, only the option selected and actually constructed shall be shown on the As-Built Drawings. Systems designed or enhanced by the Contractor such as HVAC control system, fire alarm system fire sprinkler system, irrigation sprinkler system, letters of clarification, shall be accurately and neatly recorded on the As-Built Drawings using the same symbols, terminology, and general quality as the original set of accepted design drawings. All sheets affected by a change shall be revised. The transmittal requirements for the As-built Drawings shall be shown as events on the Contractor prepared project schedule.

1.3 PAYMENT

In accordance with the clause "Payment Under Fixed - Price Construction Contracts", which provides for progress payments on estimates of work accomplished (which meets the standards of quality established under the contract), $(number of drawings in accepted design package x $250 per sheet) will be withheld from payment for the creation of As-Built drawings until the final as-built drawings are delivered to the Contracting Officer (including any necessary revisions and subject to the approval of the Contracting Officer).

The Government will assign the Contractor a performance rating (CCASS for Corps of Engineers projects) upon completion of the project. The timeliness of satisfactory As-Built drawing submittals will be an important factor in determining the assigned rating. An unsatisfactory performance of As-Built drawings creation will be given to the Contractor if the Contractor demonstrates an unwillingness to work with the Government on As-Built drawing creation or the Contractor fails to submit satisfactory Final As-Built drawings within 60 calendar days of turning the completed project over to the Using Service.

1.4 TRANSMITTAL OF AS-BUILT DRAWINGS

1.4.1 Preliminary As-Built Drawings

The Contractor shall produce Preliminary As-Built Drawings indicating as-built conditions on AutoCADD (Version 2002) with "clouding".The Contractor shall contact Jim Janicek at (402)221-4519 before beginning As-Built preparation. As-Built preparation process is provided in paragraph As-Built Preparation below. Preliminary drawings shall consist of 15 percent of total project drawings. These drawings shall be sheets used for the construction of this project (exludes Cover Sheet, Vicinity Map, Location Plan and Indexes). The As-Built CADD files which include all changes up to the time Preliminary Drawings shall be sent as stated below. The Contractor shall draw attention to all drawing changes by "clouding" the affected area. This "clouding" shall be accomplished on layer 63 of the drawing file. The Preliminary Drawings shall consist of one (1) set of CADD files on a CD-ROM and one (1) full-size set of the Black-Line Drawings. One (1) set of CADD files on a CD-ROM shall be submitted to the Omaha District Office (ATTN: CENWO-ED-DI, Jim Janicek). One (1) full-size set of the Black-Line Drawings shall be submitted to the COR. Both documents shall be submitted three (3)weeks prior to the final acceptance inspection unless otherwise directed by the COR. The COR will notify the Contractor in writing of approval / disapproval. The Contractor shall not submit the Final Drawings until he receives the COR's letter approving the Preliminary Drawings.

1.4.2 Final As-Built Drawings

The Contractor shall produce Final As-Built Drawings on AutoCADD (Version 2002) without "clouding". As-Built preparpation process is provided in paragraph As-Built Preparation below. The Final Drawings shall include all changes. The Final Drawings in the form of a CD-ROM shall be submitted to the COR and Omaha District Office (CENWO-ED-DI) no earlier than the day of acceptance of the project and no later than thirty (30) days after the date on the acceptance letter for the Preliminary Drawing unless otherwise directed by the COR. (Note: Final drawings shall not be forwarded to the customer. Corps of Engineers, Omaha District COR will forward to the customer after Quality Review.) Contractor shall submit one (1) set of CADD files on a CD-ROM to the Omaha District Office (ATTN: CENWO-ED-DI, Jim Janicek). Contractor shall send the following documents to the COR:

a) One (1) set of CADD files on CD-ROM (folder name containing as-built files shall be designated "AS-BUILTS" on each CD-ROM). Both CD case and CD-ROM shall contain the name of the project, location, specification number, and contract number, and words "As-Built Record Set"). The folder shall contain drawings, indexes and X-REF files related to all as-builts.

b) One (1) full-size set of vellumAs-Built Drawings, along with all red-lined hard copy drawings prepared by the Contractor during construction.

COR will forward one (1) full-size set of drawings along with CD-ROM to the customer.

1.4.3 As-Built Preparation

Both preliminary and final electronic as-built drawings shall be produced in accordance with the following process for AutoCADD drawings:

1.4.3.1 Not Used

1.4.3.2 For AutoCADD (*DWG) Files

a. When opened, the drawing shall be seen exactly as it should be plotted.
b. The view shall be zoomed to fit the border.
c. All information in the title block shall filled in, including plot scale.
d. The information in the title block shall be correct, including the design file name and the plot scale.
e. All files shall reference an AutoCAD border supplied by the Omaha District.
f. All unnecessary information outside the border shall be deleted.
g. All files shall be purged.
h. All xrefs shall be included.
i. All fonts used shall be included with the set, even if it is the standard AutoCAD fonts.
j. An ASCII text file shall be provided with the following information: the name and phone number of the person we need to contact if we have problems, and the version of AutoCAD used to create and/or work on the drawings.
k. Both the .ctb file and the .pc3 file shall be supplied.
l. Each sheet/design shall have its own file and file name.
m. All proxy graphics shall be exploded to allow editing with AutoCAD without the use of Autodesk desktop software.

1.5 PROCEDURE

The Contractor shall create a set of electronic Cadd files and full-size Red-Line Drawings to fully indicate As-Built conditions. The Red-Line Drawings shall be maintained at the site, in a current condition until the completion of the work and shall be available for review by the COR at all times. All as-built conditions shall be on the Red-Line Drawings within two (2) days after the work activity is completed or shall be entered on the deficiency tracking system (see Section 01451A, CONTRACTOR QUALITY CONTROL). The Contractor shall not convert electronic drawing files from one software language to another (i.e. Microstation to AutoCADD or AutoCADD to Microstation).

1.6 TITLE BLOCKS

The contract number and the specification number (if available) shall be shown on all sheets. "RECORD DRAWING" shall be added below the title block on all sheets. All modifications to the contract shall be posted in ascending order. The top line of the revision box shall state "REVISED TO SHOW AS-BUILT CONDITIONS" and dated. All modifications to all plans, sections, or details, shall have a modification number placed in the revision box under column entitled "Symbol". The statement "GENERAL REVISIONS" may be used when applicable. The date to be added in the revision box for modifications is found in Block 3 of Form SF-30. Cover Sheet will have Contract Award Set changed to As-Built Record Set with month & year completed. Month and year completed will also go in the date box in the title block. There will be no separate dates.

1.7 PROCEDURES FOR POSTING MODIFICATION CHANGES TO DRAWINGS

Follow directions in the modification for posting descriptive

changes.
A Modification Circle shall be place at the location of each deletion.
The highest modification number on the sheet should be shown in the modification circle in the "DATE" and "DRAWING CODE" boxes of the title block.
For all new details or sections that are added to a drawing, place a Modification Circle by the detail or section title.

For changes to a drawing, place a Modification Circle by the title of the affected plan, section or detail titles (each location).
For changes to schedules on drawings, a Modification Circle shall be placed either by the schedule heading or by the change in the schedule.
The Modification Circle size shall be 1/2-inch diameter unless the area where circle is to be placed is crowded. Use smaller size circle for crowded areas.

1.8 WORD ABBREVIATIONS

Abbreviations shown on the abbreviation sheet shall be used to describe all work items. Additional word abbreviations, not found on the abbreviation sheet but necessary to describe the work, shall be properly identified and incorporated with the other standard word abbreviations.

1.9 LEGEND SHEETS

Symbols, which conflict with those on the original accepted design legend sheet, shall not be used. Additional symbols, necessary to depict any additional work items, shall be properly identified and added to the legend sheet or supplemental legend. Those projects that do not have legend sheets may use supplemental legends on each sheet where symbol is shown.

1.10 CONTRACTOR SHOP DRAWINGS

Contractor shop drawings,which supersede data on the accepted design plans and/or additional drawings, prepared by the Contractor, shall be incorporated into the As-Built Drawings. Design plans prepared by Contractor shall include the designer's name on the As-Built Drawings.

1.11 INDEXING OF DRAWINGS

If drawings are added to the portfolio of drawings to depict as-built conditions, the index of drawings shall be revised accordingly.

PART 2 PRODUCTS (NOT APPLICABLE)

PART 3 EXECUTION

3.1 GENERAL

As-Built drawings shall include as-built information to the same level of detail as shown on the original details, unless otherwise specified. The Contractor shall provide any additional full-size drawings as required to display all the details.

3.2 SITE WORK

3.2.1 Utilities

All utilities shall be shown whether active, inactive, shown on the original accepted design drawings, or found on-site. The type of utility, location, general direction, size, material make-up and depth shall be shown. The location and description of any utility line or other installations of any kind known to exist within the construction area shall be shown. The location shall include dimensions to permanent features.

3.2.2 Structures

Structures above and below ground shall be shown. The size, material make-up, location, height, and/or depth shall be shown. Manholes shall show rim elevation and invert elevations as applicable. Power poles shall show electrical equipment and voltage rating.

3.2.3 Grades

Grade or alignment of roads, structures, or utilities shall be corrected if any changes were made from the contract drawings. Elevations shall be corrected if changes were made in site grading.

3.3 STRUCTURAL

3.3.1 Steel

Shop drawings that deviate from the accepted design drawings shall be incorporated in the As-Built Drawings.

3.4 MECHANICAL

3.4.1 Ductwork

Ductwork shall be shown to reflect actual installation and duct size. Ductwork routing changes shall be shown.

3.4.2 Plumbing

Piping and fixtures shall be shown to reflect the type of material, size and the route or location.

3.5 ELECTRICAL

3.5.1 PANELS

All accepted design drawing panel schedules shall be revised to show as-built conditions. Home-run circuit designation on electrical drawings shall accurately correspond to the as-built panel schedules.

3.5.2 Controls

All control diagrams in accepted design drawings shall be revised to reflect as-built conditions, and setpoints.

-- End of Section --

SECTION TABLE OF CONTENTS

DIVISION 01 - GENERAL REQUIREMENTS

SECTION 01200

WARRANTY OF CONSTRUCTION

5/00; Rev 01/02

PART 1 GENERAL

1.1 WARRANTY OF CONSTRUCTION
1.2 ADDITIONAL WARRANTY REQUIREMENTS
1.2.1 Performance Bond
1.2.2 Pre-Warranty Conference
1.2.3 Equipment Warranty Identification
1.2.4 Warranty Service Calls
1.2.5 Equipment Warranty Booklet
1.3 SUBMITTALS
1.4 EQUIPMENT WARRANTY IDENTIFICATIONS TAGS
1.4.1 GENERAL REQUIREMENTS
1.4.1.1 Tags and Information
1.4.1.2 Tags for Warranted Equipment
1.4.1.3 Exclusion to Providing Tags
1.4.2 EXECUTION
1.4.3 Equipment Warranty Tag Replacement

PART 2 NOT USED

PART 3 NOT USED

-- End of Section Table of Contents --

SECTION 01200

WARRANTY OF CONSTRUCTION
5/00; Rev 01/02

PART 1 GENERAL

1.1 WARRANTY OF CONSTRUCTION

(a) Foremost and in addition to any other warranties in this contract, the Contractor warrants, except as provided in paragraph (i) of this clause, that work performed under this contract conforms to the contract requirements and is free of any defect in equipment, material, design furnished, or workmanship performed by the Contractor or any subcontractor or supplier at any tier.

(b) This warranty shall continue for a period of 1 year from the date of final acceptance of the work. If the Government takes possession of any part of the work before final acceptance, this warranty shall continue for a period of 1 year from the date the Government takes possession of that portion of the work.

(c) The Contractor shall remedy at the Contractor's expense any failure to conform, or any defect. In addition, the Contractor shall remedy at the Contractor's expense any damage to Government-owned or controlled real or personal property, when that damage is the result of--

(1) The Contractor's failure to conform to contract requirements; or

(2) Any defect of equipment, material, workmanship, or design furnished by the Contractor.

(d) The Contractor shall restore any work damaged in fulfilling the terms and conditions of this clause.

(e) The Contractor's warranty with respect to work restored, repaired or replaced will run for 1 year from the date of restoration, repair or replacement. This provision applies equally to all items restored, repaired, or replaced under paragraph (c) and (d) above.

(f) The Government will notify the Contractor, in writing, within a reasonable time after the discovery of any failure, defect, or damage. Repair work necessary to correct a warranty condition which arises to threaten the health or safety of personnel, the physical safety of property or equipment, or which impairs operations, habitability of living spaces, etc., will be performed by the Contractor on an immediate basis as directed verbally by the Government. Written verification will follow verbal instruction.

(g) If the Contractor fails to remedy any failure, defect, or damage within a reasonable time after receipt of verbal or written notice, the Government shall have the right to replace, repair, or otherwise remedy the failure, defect, or damage at the Contractor's expense.

(h) With respect to all warranties, express or implied, from subcontractors, manufacturers, or suppliers for work performed and materials furnished under this contract, the Contractor shall--

(1) Obtain all warranties that would be given in normal commercial practice;

(2) Require all warranties to be executed, in writing, for the benefit of the Government, if directed by the Contracting Officer; and

(3) Enforce all warranties for the benefit of the Government, if directed by the Contracting Officer.

(i) In the event the Contractor's warranty under paragraph (b) of this clause has expired, the Government may bring suit at its expense to enforce a subcontractor's, manufacturer's, or supplier's warranty.

(j) Unless a defect is caused by the negligence of the Contractor or subcontractor or supplier at any tier, the Contractor shall not be liable for the repair of any defects of material or design furnished by the Government nor for the repair of any damage that results from any defect in Government-furnished material or design.

(k) This warranty shall not limit the Government's rights under the Inspection and Acceptance clause of this contract with respect to latent defects, gross mistakes, or fraud.

(l) The Prime Contractor shall designate a representative to attend and chair warranty meetings that will be held each month at the project site for the duration of the warranty period, with government and subcontractor personnel as necessary. The meeting shall review past warranty corrections and response times, open warranty items, up-coming scheduled corrections, site investigations, and other issues.

1.2 ADDITIONAL WARRANTY REQUIREMENTS

1.2.1 Performance Bond

(a) It is understood that the Contractor's Performance Bond will remain effective for one (1) year from the date of acceptance.

(b) If either the Contractor or his representative doesn't diligently pursue warranty work to completion, the contractor and surety will be liable for all costs. The Government, at its option, will either have the work performed by others or require the surety to have it done. Both direct and administrative costs will be reimbursable to the Government.

1.2.2 Pre-Warranty Conference

(a) Prior to contract completion and at a time designated by the Contracting Officer or his authorized representative, the Contractor shall meet with the Contracting Officer or his authorized representative to develop a mutual understanding with respect to the requirements of the Paragraph: WARRANTY OF CONSTRUCTION. Communication procedures for Contractor notification of warranty defects, priorities with respect to the type of defect and other

details deemed necessary by the Contracting Officer or his authorized representative for the execution of the construction warranty shall be established/reviewed at this meeting.

(b) In connection with these requirements and at the time of the Contractor's quality control completion inspection, the Contractor will furnish the name, telephone number and address of the service representative which is authorized to initiate and pursue warranty work action on behalf of the Contractor and surety. This single point of contact will be located within the local service area of the warranted construction, will be continuously available, and will be responsive to Government inquiry on warranty work action and status. This requirement does not relieve the Contractor of any Contractual responsibilities in connection with the paragraph: WARRANTY OF CONSTRUCTION.

(c) Local service area is defined as the area in which the contractor or his representative can meet the response times as described in paragraph 1.2.4 and in any event shall not exceed 200 miles radius of the construction site.

1.2.3 Equipment Warranty Identification

The Contractor shall provide warranty identification tags on all mechanical and electrical equipment installed under this contract. Tags and installation shall be in accordance with the requirements of Paragraph: EQUIPMENT WARRANTY IDENTIFICATION TAGS.

1.2.4 Warranty Service Calls

The Contractor or his local service representative will respond to the site, to a call within the time periods as follows: Four (4) hours for Heating, Air Conditioning, Refrigeration, Air Supply and Distribution, Critical Electrical service Systems and Food Service Equipment and Twenty-Four (24) hours For All Other Systems.

1.2.5 Equipment Warranty Booklet

At or before 30 days prior to final inspection and acceptance of the work, the Contractor shall submit the data mentioned as follows:

The Contractor shall provided a Booklet, which consists of a listing of all equipment items (see paragraphs a. and b. below) which are specified to be guaranteed along with the warranty papers for each piece of equipment. Three (3) legible bound copies of the booklet shall be submitted for approval and shall be indexed alphabetically by equipment type. For each specific guaranteed item, the name, address, and telephone number shall be shown on the list for the subcontractor who installed equipment, equipment supplier or distributor, and equipment manufacturer. Completion date of the guarantee period shall correspond to the applicable specification requirements for each guaranteed item. The names of service representatives that will make warranty calls along with the day, night, weekend and holiday contacts for response to a call within the time period specified shall also be identified.

a. For Equipment in Place: The equipment list shall show unit retail value and nameplate data including model number, size, manufacturer, etc. This would include capital equipment and other nonexpendable supplies of a movable nature that are not affixed as an integral part of the facility and

may be removed without destroying or reducing the usefulness of the facility. Some examples are spare parts, special tools, manufacturing equipment, maintenance equipment, instruments, installed under this contract.

b. For Installed Building Equipment: The equipment list shall show unit retail value and nameplate data including model number, size, manufacturer, etc. This would include items of equipment and furnishings (including material for installation thereof), which are required to make the facility usable and are affixed as a permanent part of the structure. Some examples are plumbing fixtures, laboratory counters and cabinets, kitchen equipment, mechanical equipment, electrical equipment, and fire protection systems installed under this contract.

1.3 SUBMITTALS

Government approval is required for submittals with a "G" designation; submittals not having a "G" designation are for information only. When used, a designation following the "G" designation identifies the office that will review the submittal for the Government. The following shall be submitted in accordance with Section 01330 SUBMITTAL PROCEDURES:

SD-11 Closeout Submittals

Equipment Warranty Booklet

1.4 EQUIPMENT WARRANTY IDENTIFICATIONS TAGS

1.4.1 GENERAL REQUIREMENTS

The Contractor shall provide warranty identification tags on all Contractor and government furnished equipment which is Contractor installed.

1.4.1.1 Tags and Information

The tags and information shall be similar in format and size to the exhibits provided by this specification, and shall be suitable for interior and exterior locations, resistant to solvents, abrasion, and to fading caused by sunlight, precipitation, etc. These tags shall have a permanent pressure- sensitive adhesive back, and shall be installed in a position that is easily (or most easily) noticeable. If the equipment surface is not suitable for adhesive back, Contractor shall submit his alternative to the Contracting Officer's Authorized Representative for review and approval. Contractor furnished equipment that has differing warranties on its components will have each component tagged.

1.4.1.2 Tags for Warranted Equipment

The tag for his equipment shall be similar to the following:

```
+-------------------------------------------+
¦            EQUIPMENT WARRANTY             ¦
¦                                           ¦
¦      CONTRACTOR FURNISHED EQUIPMENT       ¦
¦                                           ¦
¦                                           ¦
¦ MFG----------------MODEL NO.-----------   ¦
¦                                           ¦
¦ SERIAL NO.------------------------------ ¦
```

```
|                                          |
| CONTRACT NO.---------------------------- |
|                                          |
| CONTRACTOR NAME------------------------- |
|                                          |
| CONTRACTOR ADDRESS---------------------- |
|                                          |
| CONTRACTOR TELEPHONE-------------------- |
|                                          |
| CONTRACTOR WARRANTY EXPIRES------------- |
|                                          |
| IN CASE OF WARRANTY ACTION FIRST CONTACT |
|                                          |
|     [DEH] [BCE] AT [TELEPHONE NUMBER]    |
|                                          |
+------------------------------------------+
```

```
+--------------------------------------------------+
|                                                  |
|                EQUIPMENT WARRANTY                |
|                                                  |
|          GOVERNMENT FURNISHED EQUIPMENT          |
|                                                  |
|  MFG ________________  MODEL NO._______________  |
|                                                  |
|  SERIAL NO. ___________________________________  |
|                                                  |
|  CONTRACT NO. _________________________________  |
|                                                  |
|  DATE EQUIP PLACED IN SERVICE __________________ |
|                                                  |
+--------------------------------------------------+
```

1.4.1.3 Exclusion to Providing Tags

If the manufacturer's name (MFG), model number and serial number are on the manufacturer's equipment data plate and this data plate is easily found and fully legible, this information need not be duplicated on the equipment warranty tag. The Contractor's warranty expiration date and the final manufacturer's warranty expiration date will be determined as specified by the Paragraph "WARRANTY OF CONSTRUCTION".

1.4.2 EXECUTION

The Contractor will complete the required information on each tag and install these tags on the equipment by the time of and as a condition of final acceptance of the equipment. The Contractor shall be responsible for scheduling acceptance inspection with the Contracting Officer (verbal and written notification required). If this inspection is delayed by the Contractor, the Contractor shall, at his own expense, update the in-service and warranty expiration dates on these tags.

1.4.3 Equipment Warranty Tag Replacement

Under the terms of this contract, the Contractor's warranty with respect to work repaired or replaced shall run for one year from the date of repair or replacement. Such activity shall include a data warranty identification tag on the repaired or replaced equipment. The tag shall be furnished and

installed by the Contractor, and shall be similar to the original tag, except that it should include the scope of repair and that the contractor's warranty expiration date will be one year from the date of acceptance of the repair or replacement. In the case of repair, the repair only will be covered by the extended warranty. In the case of replacement of a component, the component only will be covered by the extended warranty. In these cases, the original tags will not be removed, but an additional tag will be installed for the repair or component replacement.

PART 2 NOT USED

PART 3 NOT USED

-- End of Section --

This page was intentionally left blank for duplex printing.

SECTION TABLE OF CONTENTS

DIVISION 01 - GENERAL REQUIREMENTS

SECTION 01320A

PROJECT SCHEDULE

05/02; Omaha Rev. 2/03

PART 1 GENERAL

1.1 REFERENCES
1.2 QUALIFICATIONS

PART 2 PRODUCTS (Not Applicable)

PART 3 EXECUTION

3.1 GENERAL REQUIREMENTS
3.2 BASIS FOR PAYMENT
3.3 PROJECT SCHEDULE
3.3.1 Use of the Critical Path Method
3.3.2 Level of Detail Required
3.3.2.1 Activity Durations
3.3.2.2 Design and Permit Activities
3.3.2.3 Procurement Activities
3.3.2.4 Critical Activities
3.3.2.5 Government Activities
3.3.2.6 Responsibility
3.3.2.7 Work Areas
3.3.2.8 Modification or Claim Number
3.3.2.9 Bid Item
3.3.2.10 Phase of Work
3.3.2.11 Category of Work
3.3.2.12 Feature of Work
3.3.3 Scheduled Project Completion
3.3.3.1 Project Start Date
3.3.3.2 Constraint of Last Activity
3.3.3.3 Early Project Completion
3.3.4 Interim Completion Dates
3.3.4.1 Start Phase
3.3.4.2 End Phase
3.3.4.3 Phase X
3.3.5 Default Progress Data Disallowed
3.3.6 Out-of-Sequence Progress
3.3.7 Negative Lags
3.4 PROJECT SCHEDULE SUBMISSIONS
3.4.1 Preliminary Project Schedule Submission
3.4.2 Initial Project Schedule Submission
3.4.3 Monthly Schedule Updates
3.4.4 Standard Activity Coding Dictionary
3.5 SUBMISSION REQUIREMENTS
3.5.1 Data Disks
3.5.1.1 File Medium

3.5.1.2 Disk Label
3.5.1.3 File Name
3.5.2 Narrative Report
3.5.3 Approved Changes Verification
3.5.4 Schedule Reports
3.5.4.1 Activity Report
3.5.4.2 Logic Report
3.5.4.3 Total Float Report
3.5.4.4 Earnings Report
3.5.5 Network Diagram
3.5.5.1 Continuous Flow
3.5.5.2 Project Milestone Dates
3.5.5.3 Critical Path
3.5.5.4 Banding
3.5.5.5 S-Curves
3.6 PERIODIC PROGRESS MEETINGS
3.6.1 Meeting Attendance
3.6.2 Update Submission Following Progress Meeting
3.6.3 Progress Meeting Contents
3.6.3.1 Start and Finish Dates
3.6.3.2 Time Completion
3.6.3.3 Cost Completion
3.6.3.4 Logic Changes
3.6.3.5 Other Changes
3.7 REQUESTS FOR TIME EXTENSIONS
3.7.1 Justification of Delay
3.7.2 Submission Requirements
3.7.3 Additional Submission Requirements
3.8 DIRECTED CHANGES
3.9 OWNERSHIP OF FLOAT

-- End of Section Table of Contents --

SECTION 01320A

PROJECT SCHEDULE
05/02; Omaha Rev. 2/03

PART 1 GENERAL

1.1 REFERENCES

The publications listed below form a part of the specification to the extent referenced. The publications are referenced in the text by basic designation only.

U.S. ARMY CORPS OF ENGINEERS (USACE)

ER 1-1-11	(1995) Progress, Schedules, and Network Analysis Systems

1.2 QUALIFICATIONS

The Contractor shall designate an authorized representative who shall be responsible for the preparation of all required project schedule reports.

PART 2 PRODUCTS (Not Applicable)

PART 3 EXECUTION

3.1 GENERAL REQUIREMENTS

Pursuant to the Contract Clause, SCHEDULE FOR CONSTRUCTION CONTRACTS, a Project Schedule as described below shall be prepared. The scheduling of design and construction shall be the responsibility of the Contractor. Contractor management personnel shall actively participate in its development. Designers, subcontractors and suppliers working on the project shall also contribute in developing and maintaining an accurate Project Schedule. The approved Project Schedule shall be used to measure the progress of the work, to aid in evaluating time extensions, and to provide the basis of all progress payments. The scheduler shall be a direct employee of the prime contractor and have a minimum of 2 years experience in scheduling.

3.2 BASIS FOR PAYMENT

The schedule shall be the basis for measuring Contractor progress. Lack of an approved schedule or scheduling personnel will result in an inability of the Contracting Officer to evaluate Contractor's progress for the purposes of payment. Failure of the Contractor to provide all information, as specified below, shall result in the disapproval of the entire Project Schedule submission and the inability of the Contracting Officer to evaluate Contractor progress for payment purposes. In the case where Project Schedule revisions have been directed by the Contracting Officer and those revisions have not been included in the Project Schedule, the Contracting Officer may hold retainage up to the maximum allowed by contract, each payment period, until revisions to the Project Schedule have been made.

3.3 PROJECT SCHEDULE

The computer software system utilized by the Contractor to produce the Project Schedule shall be capable of providing all requirements of this specification. Failure of the Contractor to meet the requirements of this specification shall result in the disapproval of the schedule. Manual methods used to produce any required information shall require approval by the Contracting Officer.

3.3.1 Use of the Critical Path Method

The Critical Path Method (CPM) of network calculation shall be used to generate the Project Schedule. The Contractor shall provide the Project Schedule in the Precedence Diagram Method (PDM).

3.3.2 Level of Detail Required

The Project Schedule shall include an appropriate level of detail. Failure to develop or update the Project Schedule or provide data to the Contracting Officer at the appropriate level of detail, as specified by the Contracting Officer, shall result in the disapproval of the schedule. The Contracting Officer will use, but is not limited to, the following conditions to determine the appropriate level of detail to be used in the Project Schedule:

3.3.2.1 Activity Durations

Contractor submissions shall follow the direction of the Contracting Officer regarding reasonable activity durations. Reasonable durations are those that allow the progress of activities to be accurately determined between payment periods (usually less than 2 percent of all non-procurement activities' Original Durations are greater than 20 days).

3.3.2.2 Design and Permit Activities

Design and permitting activities, including necessary conferences and follow-up actions and design package submission dates, shall be integrated into the schedule.

3.3.2.3 Procurement Activities

Tasks related to the procurement of long lead materials or equipment shall be included as separate activities in the project schedule. Long lead materials and equipment are those materials that have a procurement cycle of over 90 days. Examples of procurement process activities include, but are not limited to: submittals, approvals, procurement, fabrication, and delivery.

3.3.2.4 Critical Activities

The following activities shall be listed as separate line activities on the Contractor's project schedule:

a. Submission and approval of mechanical/electrical layout drawings.

b. Submission and approval of O & M manuals.

c. Submission and approval of as-built drawings.

d. Submission and approval of 1354 data and installed equipment lists.

e. Submission and approval of testing and air balance (TAB).

f. Submission of TAB specialist design review report.

g. Submission and approval of fire protection specialist.

h. Submission and approval of testing and balancing of HVAC plus commissioning plans and data.

i. Air and water balance dates.

j. HVAC commissioning dates.

k. Controls testing plan.

l. Controls testing.

m. Performance Verification testing.

n. Other systems testing, if required.

o. Prefinal inspection.

p. Correction of punchlist from prefinal inspection.

q. Final inspection.

3.3.2.5 Government Activities

Government and other agency activities that could impact progress shall be shown. These activities include, but are not limited to: approvals, design reviews, environmental permit approvals by State regulators, inspections, utility tie-in, Government Furnished Equipment (GFE) and Notice to Proceed (NTP) for phasing requirements.

3.3.2.6 Responsibility

All activities shall be identified in the project schedule by the party responsible to perform the work. Responsibility includes, but is not limited to, the subcontracting firm, contractor work force, or government agency performing a given task. Activities shall not belong to more than one responsible party. The responsible party for each activity shall be identified by the Responsibility Code.

3.3.2.7 Work Areas

All activities shall be identified in the project schedule by the work area in which the activity occurs. Activities shall not be allowed to cover more than one work area. The work area of each activity shall be identified by the Work Area Code.

3.3.2.8 Modification or Claim Number

Any activity that is added or changed by contract modification or used to justify claimed time shall be identified by a mod or claim code that changed the activity. Activities shall not belong to more than one

modification or claim item. The modification or claim number of each activity shall be identified by the Mod or Claim Number. Whenever possible, changes shall be added to the schedule by adding new activities. Existing activities shall not normally be changed to reflect modifications.

3.3.2.9 Bid Item

All activities shall be identified in the project schedule by the Bid Item to which the activity belongs. An activity shall not contain work in more than one bid item. The bid item for each appropriate activity shall be identified by the Bid Item Code.

3.3.2.10 Phase of Work

All activities shall be identified in the project schedule by the phases of work in which the activity occurs. Activities shall not contain work in more than one phase of work. The project phase of each activity shall be by the unique Phase of Work Code.

3.3.2.11 Category of Work

All Activities shall be identified in the project schedule according to the category of work which best describes the activity. Category of work refers, but is not limited, to the procurement chain of activities including such items as designs, design package submissions design reviews, review conferences, permits, submittals, approvals, procurement, fabrication, delivery, installation, start-up, and testing. The category of work for each activity shall be identified by the Category of Work Code.

3.3.2.12 Feature of Work

All activities shall be identified in the project schedule according to the feature of work to which the activity belongs. Feature of work refers, but is not limited to, a work breakdown structure for the project. The feature of work for each activity shall be identified by the Feature of Work Code.

3.3.3 Scheduled Project Completion

The schedule interval shall extend from NTP to the contract completion date.

3.3.3.1 Project Start Date

The schedule shall start no earlier than the date on which the NTP was acknowledged. The Contractor shall include as the first activity in the project schedule an activity called "Start Project". The "Start Project" activity shall have an "ES" constraint date equal to the date that the NTP was acknowledged, and a zero day duration.

3.3.3.2 Constraint of Last Activity

Completion of the last activity in the schedule shall be constrained by the contract completion date. Calculation on project updates shall be such that if the early finish of the last activity falls after the contract completion date, then the float calculation shall reflect a negative float on the critical path. The Contractor shall include as the last activity in the project schedule an activity called "End Project". The "End Project" activity shall have an "LF" constraint date equal to the completion date for the project, and a zero day duration.

3.3.3.3 Early Project Completion

In the event the project schedule shows completion of the project prior to the contract completion date, the Contractor shall identify those activities that have been accelerated and/or those activities that are scheduled in parallel to support the Contractor's "early" completion. Contractor shall specifically address each of the activities noted in the narrative report at every project schedule update period to assist the Contracting Officer in evaluating the Contractor's ability to actually complete prior to the contract period.

3.3.4 Interim Completion Dates

Contractually specified interim completion dates shall also be constrained to show negative float if the early finish date of the last activity in that phase falls after the interim completion date.

3.3.4.1 Start Phase

The Contractor shall include as the first activity for a project phase an activity called "Start Phase X" where "X" refers to the phase of work. The "Start Phase X" activity shall have an "ES" constraint date equal to the date on which the NTP was acknowledged, and a zero day duration.

3.3.4.2 End Phase

The Contractor shall include as the last activity in a project phase an activity called "End Phase X" where "X" refers to the phase of work. The "End Phase X" activity shall have an "LF" constraint date equal to the completion date for the project, and a zero day duration.

3.3.4.3 Phase X

The Contractor shall include a hammock type activity for each project phase called "Phase X" where "X" refers to the phase of work. The "Phase X" activity shall be logically tied to the earliest and latest activities in the phase.

3.3.5 Default Progress Data Disallowed

Actual Start and Finish dates shall not be automatically updated by default mechanisms that may be included in CPM scheduling software systems. Actual Start and Finish dates on the CPM schedule shall match those dates provided from Contractor Quality Control Reports. Failure of the Contractor to document the Actual Start and Finish dates on the Daily Quality Control report for every in-progress or completed activity, and failure to ensure that the data contained on the Daily Quality Control reports is the sole basis for schedule updating shall result in the disapproval of the Contractor's schedule and the inability of the Contracting Officer to evaluate Contractor progress for payment purposes. Updating of the percent complete and the remaining duration of any activity shall be independent functions. Program features which calculate one of these parameters from the other shall be disabled.

3.3.6 Out-of-Sequence Progress

Activities that have posted progress without all preceding logic being satisfied (Out-of-Sequence Progress) will be allowed only on a case-by-case approval of the Contracting Officer. The Contractor shall propose logic

corrections to eliminate all out of sequence progress or justify not changing the sequencing for approval prior to submitting an updated project schedule.

3.3.7 Negative Lags

Lag durations contained in the project schedule shall not have a negative value.

3.4 PROJECT SCHEDULE SUBMISSIONS

The Contractor shall provide the submissions as described below. The data disk, reports, and network diagrams required for each submission are contained in paragraph SUBMISSION REQUIREMENTS.

3.4.1 Preliminary Project Schedule Submission

The Preliminary Project Schedule, defining the Contractor's planned operations for the first 60 calendar days shall be submitted for approval within 20 calendar days after the NTP is acknowledged. The approved preliminary schedule shall be used for payment purposes not to exceed 60 calendar days after NTP.

3.4.2 Initial Project Schedule Submission

The Initial Project Schedule shall be submitted for approval within 40 calendar days after NTP. The schedule shall provide a reasonable sequence of activities which represent work through the entire project and shall be at a reasonable level of detail.

3.4.3 Monthly Schedule Updates

Based on the result of progress meetings, specified in "Monthly Progress Meetings," the Contractor shall submit monthly schedule updates. These submissions shall enable the Contracting Officer to assess Contractor's progress. If the Contractor fails or refuses to furnish the information and project schedule data, which in the judgement of the Contracting Officer or authorized representative is necessary for verifying the Contractor's progress, the Contractor shall be deemed not to have provided an estimate upon which progress payment may be made.

3.4.4 Standard Activity Coding Dictionary

The Contractor shall use the activity coding structure defined in the Standard Data Exchange Format (SDEF) in ER 1-1-11, Appendix A. This exact structure is mandatory, even if some fields are not used.

3.5 SUBMISSION REQUIREMENTS

The following items shall be submitted by the Contractor for the preliminary submission, initial submission, and every monthly project schedule update throughout the life of the project:

3.5.1 Data Disks

Two data disks containing the project schedule shall be provided. Data on the disks shall adhere to the SDEF format specified in ER 1-1-11, Appendix A.

3.5.1.1 File Medium

Required data shall be submitted on 3.5 disks, formatted to hold 1.44 MB of data, compatible with Microsoft Windows 95/98 operating systems, unless otherwise approved by the Contracting Officer.

3.5.1.2 Disk Label

A permanent exterior label shall be affixed to each disk submitted. The label shall indicate the type of schedule (Preliminary, Initial, Update, or Change), full contract number, project name, project location, data date, name and telephone number or person responsible for the schedule.

3.5.1.3 File Name

Each file submitted shall have a name related to either the schedule data date, project name, or contract number. The Contractor shall develop a naming convention that will ensure that the names of the files submitted are unique. The Contractor shall submit the file naming convention to the Contracting Officer for approval.

3.5.2 Narrative Report

A Narrative Report shall be provided with the preliminary, initial, and each update of the project schedule. This report shall be provided as the basis of the Contractor's progress payment request. The Narrative Report shall include: a description of activities along the 2 most critical paths, a description of current and anticipated problem areas or delaying factors and their impact, and an explanation of corrective actions taken or required to be taken. The narrative report is expected to relay to the Government, the Contractor's thorough analysis of the schedule output and its plans to compensate for any problems, either current or potential, which are revealed through that analysis.

3.5.3 Approved Changes Verification

Only project schedule changes that have been previously approved by the Contracting Officer shall be included in the schedule submission. The Narrative Report shall specifically reference, on an activity by activity basis, all changes made since the previous period and relate each change to documented, approved schedule changes.

3.5.4 Schedule Reports

The format for each activity for the schedule reports listed below shall contain: Activity Numbers, Activity Description, Original Duration, Remaining Duration, Early Start Date, Early Finish Date, Late Start Date, Late Finish Date, Total Float. Actual Start and Actual Finish Dates shall be printed for those activities in progress or completed.

3.5.4.1 Activity Report

A list of all activities sorted according to activity number.

3.5.4.2 Logic Report

A list of Preceding and Succeeding activities for every activity in ascending order by activity number. Preceeding and succeeding activities shall include all information listed above in paragraph Schedule Reports.

A blank line shall be left between each activity grouping.

3.5.4.3 Total Float Report

A list of all incomplete activities sorted in ascending order of total float. Activities which have the same amount of total float shall be listed in ascending order of Early Start Dates. Completed activities shall not be shown on this report.

3.5.4.4 Earnings Report

A compilation of the Contractor's Total Earnings on the project from the NTP until the most recent Monthly Progress Meeting. This report shall reflect the Earnings of specific activities based on the agreements made in the field and approved between the Contractor and Contracting Officer at the most recent Monthly Progress Meeting. Provided that the Contractor has provided a complete schedule update, this report shall serve as the basis of determining Contractor Payment. Activities shall be grouped by bid item and sorted by activity numbers. This report shall: sum all activities in a bid item and provide a bid item percent; and complete and sum all bid items to provide a total project percent complete. The printed report shall contain, for each activity: the Activity Number, Activity Description, Original Budgeted Amount, Total Quantity, Quantity to Date, Percent Complete (based on cost), and Earnings to Date.

3.5.5 Network Diagram

The network diagram shall be required on the initial schedule submission and on monthly schedule update submissions. The network diagram shall depict and display the order and interdependence of activities and the sequence in which the work is to be accomplished. The Contracting Officer will use, but is not limited to, the following conditions to review compliance with this paragraph:

3.5.5.1 Continuous Flow

Diagrams shall show a continuous flow from left to right with no arrows from right to left. The activity number, description, duration, and estimated earned value shall be shown on the diagram.

3.5.5.2 Project Milestone Dates

Dates shall be shown on the diagram for start of project, any contract required interim completion dates, and contract completion dates.

3.5.5.3 Critical Path

The critical path shall be clearly shown.

3.5.5.4 Banding

Activities shall be grouped to assist in the understanding of the activity sequence. Typically, this flow will group activities by category of work, work area and/or responsibility.

3.5.5.5 S-Curves

Earnings curves showing projected early and late earnings and earnings to date.

3.6 PERIODIC PROGRESS MEETINGS

Progress meetings to discuss payment shall include a monthly onsite meeting or other regular intervals mutually agreed to at the preconstruction conference. During this meeting the Contractor shall describe, on an activity by activity basis, all proposed revisions and adjustments to the project schedule required to reflect the current status of the project. The Contracting Officer will approve activity progress, proposed revisions, and adjustments as appropriate.

3.6.1 Meeting Attendance

The Contractor's Project Manager and Scheduler shall attend the regular progress meeting.

3.6.2 Update Submission Following Progress Meeting

A complete update of the project schedule containing all approved progress, revisions, and adjustments, based on the regular progress meeting, shall be submitted not later than 4 working days after the monthly progress meeting.

3.6.3 Progress Meeting Contents

Update information, including Actual Start Dates, Actual Finish Dates, Remaining Durations, and Cost-to-Date shall be subject to the approval of the Contracting Officer. As a minimum, the Contractor shall address the following items on an activity by activity basis during each progress meeting.

3.6.3.1 Start and Finish Dates

The Actual Start and Actual Finish dates for each activity currently in-progress or completed.

3.6.3.2 Time Completion

The estimated Remaining Duration for each activity in-progress. Time-based progress calculations shall be based on Remaining Duration for each activity.

3.6.3.3 Cost Completion

The earnings for each activity started. Payment will be based on earnings for each in-progress or completed activity. Payment for individual activities will not be made for work that contains quality defects. A portion of the overall project amount may be retained based on delays of activities.

3.6.3.4 Logic Changes

All logic changes pertaining to NTP on change orders, change orders to be incorporated into the schedule, contractor proposed changes in work sequence, corrections to schedule logic for out-of-sequence progress, lag durations, and other changes that have been made pursuant to contract provisions shall be specifically identified and discussed.

3.6.3.5 Other Changes

Other changes required due to delays in completion of any activity or group of activities include: 1) delays beyond the Contractor's control, such as strikes and unusual weather. 2) delays encountered due to submittals, Government Activities, deliveries or work stoppages which make re-planning the work necessary. 3) Changes required to correct a schedule which does not represent the actual or planned prosecution and progress of the work.

3.7 REQUESTS FOR TIME EXTENSIONS

In the event the Contractor requests an extension of the contract completion date, or any interim milestone date, the Contractor shall furnish the following for a determination as to whether or not the Contractor is entitled to an extension of time under the provisions of the contract: justification, project schedule data, and supporting evidence as the Contracting Officer may deem necessary. Submission of proof of delay, based on revised activity logic, duration, and costs (updated to the specific date that the delay occurred) is obligatory to any approvals.

3.7.1 Justification of Delay

The project schedule shall clearly display that the Contractor has used, in full, all the float time available for the work involved with this request. The Contracting Officer's determination as to the number of allowable days of contract extension shall be based upon the project schedule updates in effect for the time period in question, and other factual information. Actual delays that are found to be caused by the Contractor's own actions, which result in the extension of the schedule, will not be a cause for a time extension to the contract completion date.

3.7.2 Submission Requirements

The Contractor shall submit a justification for each request for a change in the contract completion date of under 2 weeks based upon the most recent schedule update at the time of the NTP or constructive direction issued for the change. Such a request shall be in accordance with the requirements of other appropriate Contract Clauses and shall include, as a minimum:

a. A list of affected activities, with their associated project schedule activity number.

b. A brief explanation of the causes of the change.

c. An analysis of the overall impact of the changes proposed.

d. A sub-network of the affected area.

Activities impacted in each justification for change shall be identified by a unique activity code contained in the required data file.

3.7.3 Additional Submission Requirements

For any requested time extension of over 2 weeks, the Contracting Officer may request an interim update with revised activities for a specific change request. The Contractor shall provide this disk within 4 days of the Contracting Officer's request.

3.8 DIRECTED CHANGES

If the NTP is issued for changes prior to settlement of price and/or time,

the Contractor shall submit proposed schedule revisions to the Contracting Officer within 2 weeks of the NTP being issued. The proposed revisions to the schedule will be approved by the Contracting Officer prior to inclusion of those changes within the project schedule. If the Contractor fails to submit the proposed revisions, the Contracting Officer may furnish the Contractor with suggested revisions to the project schedule. The Contractor shall include these revisions in the project schedule until revisions are submitted, and final changes and impacts have been negotiated. If the Contractor has any objections to the revisions furnished by the Contracting Officer, the Contractor shall advise the Contracting Officer within 2 weeks of receipt of the revisions. Regardless of the objections, the Contractor shall continue to update the schedule with the Contracting Officer's revisions until a mutual agreement in the revisions is reached. If the Contractor fails to submit alternative revisions within 2 weeks of receipt of the Contracting Officer's proposed revisions, the Contractor will be deemed to have concurred with the Contracting Officer's proposed revisions. The proposed revisions will then be the basis for an equitable adjustment for performance of the work.

3.9 OWNERSHIP OF FLOAT

Float available in the schedule, at any time, shall not be considered for the exclusive use of either the Government or the Contractor.

-- End of Section --

This page was intentionally left blank for duplex printing.

SECTION TABLE OF CONTENTS

DIVISION 01 - GENERAL REQUIREMENTS

SECTION 01330

SUBMITTAL PROCEDURES

09/01; Omaha Update 21/03

PART 1 GENERAL

1.1 SUMMARY
1.2 CONTRACTOR RESPONSIBILITIES
1.3 SUBMITTAL IDENTIFICATION (SD)
1.4 SUBMITTAL CLASSIFICATION
1.4.1 Designer Approved ("G-AE")
1.4.2 Government Reviewed Construction Submittals ("G-AO")
1.4.3 Information Only (FIO)
1.4.4 Administrative Submittals
1.5 GOVERNMENT REVIEWED SUBMITTALS
1.6 DISAPPROVED SUBMITTALS
1.7 WITHHOLDING OF PAYMENT
1.8 GENERAL
1.9 SUBMITTAL REGISTER AND ENG FORM 4288 (RMS) SUBMITTAL REGISTER
1.10 SCHEDULING
1.11 TRANSMITTAL FORM (ENG FORM 4025)
1.12 SUBMITTAL PROCEDURES
1.12.1 Procedures
1.12.1.1 "G-AE" Submittals
1.12.1.2 "G-AO" and FIO Submittals
1.12.1.3 Base Civil Engineering Office Submittals
1.12.1.4 Certificates of Compliance
1.12.1.5 Purchase Orders
1.12.1.6 Operation and Maintenance Instructions and/or Manuals
1.12.1.7 Interior/Exterior Finish Sample and Data
1.12.2 Variations
1.13 CONTROL OF SUBMITTALS
1.14 SUBMITTALS (FINAL COPY)
1.14.1 "G-AE" Submittals
1.14.2 "G-AO" Submittals
1.15 INFORMATION ONLY SUBMITTALS
1.16 STAMPS

-- End of Section Table of Contents --

SECTION 01330

SUBMITTAL PROCEDURES
09/01; Omaha Update 21/03

PART 1 GENERAL

Attachments: Submittal Register
ENG Form 4025, Transmittal Form

1.1 SUMMARY

This section includes administrative and procedural requirements for construction submittals presented by the Contractor after 100% corrected plans and specifications have been accepted by the government. This section also includes requirements for developing, submitting and maintaining a "Submittal Register".

1.2 CONTRACTOR RESPONSIBILITIES

The Contractor is responsible for total management of his work including approval, scheduling, control, and certification of all submittals. The submittal management system provided in these specifications is intended to be a complete system for the Contractor to use to control the quality of materials, equipment and workmanship provided by manufacturers, fabricators, suppliers and subcontractors. The Contractor shall review each submittal for contract compliance. The Submittal Register (ENG Form 4288) will be utilized to log and monitor all submittal activities. No construction or installation activities shall be performed prior to required approvals and Government compliance reviews of applicable submittals. The Contractor shall perform a check to assure that all materials and/or equipment have been tested, submitted and approved during the preparatory phase of quality control inspections. The Contractor shall coordinate all submittals with the Contractor's Designer (A-E). Approval by the Contractor's Designer means that the submittal is in compliance with the Construction Set design submittal.

1.3 SUBMITTAL IDENTIFICATION (SD)

Submittals required are identified by SD numbers and titles as follows:

SD-01 Preconstruction Submittals

Tabular lists showing location, features, or other pertinent information regarding products, materials, equipment, or components to be used in the work.

In addition, the following items are included:

Work plan
Permits

SD-02 Shop Drawings

Submittals which graphically show relationship of various components of the work, schematic diagrams of systems, details of fabrication, layouts of particular elements, connections, and other relational aspects of the work.

SD-03 Product Data

Catalog cuts, illustrations, schedules, diagrams, performance charts, instructions and brochures illustrating size, physical appearance and other characteristics of materials or equipment for some portion of the work.

Samples of warranty language when the contract requires extended product warranties.

SD-04 Samples

Samples, including both fabricated and unfabricated physical examples of materials, products, and units of work as complete units or as portions of units of work.

Physical examples of materials, equipment or workmanship that illustrate functional and aesthetic characteristics of a material or product and establish standards by which the work can be judged. Color samples from the manufacturer's standard line (or custom color samples if specified) to be used in selecting or approving colors for the project.

Field samples and mock-ups constructed on the project site establish standards by which the ensuring work can be judged. Includes assemblies or portions of assemblies which are to be incorporated into the project and those which will be removed at conclusion of the work.

SD-05 Design Data

Calculations, mix designs, analyses or other data pertaining to a part of work.

SD-06 Test Reports

Report signed by authorized official of testing laboratory that a material, product or system identical to the material, product or system to be provided has been tested in accordance with specified requirements. (Testing must have been within three years of date of contract award for the project.)

Report which includes findings of a test required to be performed by the contractor on an actual portion of the work or prototype prepared for the project before shipment to job site.

Report which includes finding of a test made at the job site or on sample taken from the job site, on portion of work during or after installation.

Investigation reports

Daily checklists

Final acceptance test and operational test procedure

SD-07 Certificates

A document, required of the Contractor, or through the Contractor, from a supplier, installer, manufacturer, or other lower tier Contractor, the purpose of which is to confirm the quality or orderly progression of a portion of the work by documenting procedures, acceptability of methods or personnel, qualifications, or other verifications of quality.

Statement signed by an official authorized to certify on behalf of the manufacturer of a product, system or material, attesting that the product, system or material meets specified requirements. The statement must be dated after the award of the contract, must state the Contractor's name and address, must name the project and location, and must list the specific requirements which are being certified.

Confined space entry permits.

SD-08 Manufacturer's Instructions

Preprinted material describing installation of a product, system or material, including special notices and material safety data sheets, if any, concerning impedances, hazards, and safety precautions.

SD-09 Manufacturer's Field Reports

Documentation of the testing and verification actions taken by manufacturer's representative to confirm compliance with manufacturer's standards or instructions.

Factory test reports.

SD-10 Operation and Maintenance Data

Data intended to be incorporated in operations and maintenance manuals.

SD-11 Closeout Submittals

Documentation to record compliance with technical or administrative requirements or to establish an administrative mechanism.

In addition, the following items are included:

As-built drawings

Special warranties

Posted operating instructions

Training plan

1.4 SUBMITTAL CLASSIFICATION

Submittals are classified as follows:

1.4.1 Designer Approved ("G-AE")

Designer approval is required for extensions of design, critical materials, deviations, any deviations from the solicitation, the accepted proposal, or the completed design, equipment whose compatibility with the entire system must be checked, and other items as designated by the Contracting Officer.

Within the terms of the Contract Clause entitled "Specifications and Drawings for Construction," they are considered to be "shop drawings." All submittals noted in the technical specifications and Submittal Register as "G-AE" are subject to approval by the Contractor's Designer, prior to submittal to the Government. The Contracting Officer has the option to review any submittal. The Government will review all "G-AE" submittals for conformance to the solicitation and all submittals designated as variations from the Solicitation or 100% corrected design or as directed by the Contracting Officer.

1.4.2 Government Reviewed Construction Submittals ("G-AO")

"G-AO" submittals subject to Government review are those so designated by the Contracting Officer during the design process or preconstruction meeting. All "G-AO" submittals shall be reviewed and approved by the Contractor's Quality Control Representative and the Contractor's Designer prior to submittal to the Government. Within the terms of the Contract Clause entitled "Specification and Drawings for Construction," they are considered to be "shop drawings." Any variance must clearly identify the variance as specified in paragraph: "Variations", below.

Government review is required for designated "G-AO" submittals and variations from the the solicitation requirements and completed design. Review will be only for conformance with the contract requirements. This also includes those construction submittals for which the design documents did not include enough detail to ascertain contract compliance. Government review will not include development of design calculations or other means of determining adequacy of design. The Contractor and his designer retains the sole responsibility for adequacy of design.

1.4.3 Information Only (FIO)

All "FIO" submittals shall be reviewed and approved by the Contractor's Quality Control Representative and the Contractor's Designer prior to submittal to the Government. They are not considered to be "shop drawings" within the terms of the Contract Clause referred to above. The Contracting Officer has the option to review any submittal.

1.4.4 Administrative Submittals

The submittal items listed below are not be included on the Submittal Register (as discussed below). Unless directed otherwise by the Contracting Officer, the following administrative submittals shall be submitted to the Area or Resident (as directed) Office, for approval, via a Serial Letter: Quality Control Plans (Section 01451A CONTRACTOR QUALITY CONTROL), Accident Prevention Plans (Section 01400 SPECIAL SAFETY REQUIREMENTS, Revisions to Environmental Protection Plans (Section 01355 ENVIRONMENTAL PROTECTION) and other submittals as directed by the Contracting Officer. Format for the Serial Letter shall be as directed by the Area or Resident Office.

1.5 GOVERNMENT REVIEWED SUBMITTALS

The Contracting Officer's review of submittals shall not be construed as a complete check, but will indicate only that the general method of construction, materials, detailing and other information appear to meet the Solicitation requirements. Government Review will not relieve the Contractor of the responsibility for any error which may exist, as the

Contractor under the Design and CQC requirements of this contract is responsible for design, compliance with design criteria required in the solicitation, dimensions, all design extensions, such as the design of adequate connections and details, etc. and the satisfactory construction of all work. After submittals have been reviewed for conformance or approval, as applicable, by the Contracting Officer, no resubmittal for the purpose of substituting materials or equipment will be considered unless accompanied by an explanation of why a substitution is necessary.

1.6 DISAPPROVED SUBMITTALS

The Contractor shall make all corrections required by the Contracting Officer, obtain the Contractor's Designer approval and Government review, or approval, when applicable, and promptly furnish a corrected submittal in the form and number of copies specified for the initial submittal. Any submittal found to contain errors or unapproved variations from the solicitation or accepted proposal, shall be resubmitted as one requiring "approval" action, requiring both Designer's approval and Government conformance review or approval, as applicable. If the Contractor considers any correction indicated on the submittals to constitute a change to the contract, a notice in accordance with the Contract Clause "Changes" shall be given promptly to the Contracting Officer.

1.7 WITHHOLDING OF PAYMENT

No Payment for materials incorporated in the work will be made if all required Designer or Contractor Quality Control Representative approvals or required Government conformance reviews, or appprovals, as applicable, have not been obtained. No payment will be made for any materials incorporated in the work for any conformance review submittals or information only submittals found to contain errors or deviations from the Solicitation or Accepted Proposal.

1.8 GENERAL

The Contractor shall make submittals as required by the specifications. The Contracting Officer may request submittals in addition to those specified when deemed necessary to adequately describe the work covered in the respective sections. Units of weights and measures used on all submittals shall be the same as those used in the contract drawings. Each submittal shall be complete and in sufficient detail to allow ready determination of compliance with contract requirements. The Contractor's Quality Control (CQC) representative, and the Designer, as applicable, shall check, approve and stamp, sign, and date each item, indicating action taken. Proposed variations from the solicitation (contract requirements)or accepted 100% corrected design shall be clearly identified. Submittals shall include items such as: Contractor's, manufacturer's, or fabricator's drawings; descriptive literature including (but not limited to) catalog cuts, diagrams, operating charts or curves; test reports; test cylinders; samples; O&M manuals (including parts list); certifications; warranties; and other such required submittals. Submittals requiring conformance review or approval by the Government shall be scheduled and made prior to the acquisition of the material or equipment covered thereby. Samples remaining upon completion of the work shall be picked up and disposed of in accordance with manufacturer's Material Safety Data Sheets (MSDS) and in compliance with existing laws and regulations.

1.9 SUBMITTAL REGISTER AND ENG FORM 4288 (RMS) SUBMITTAL REGISTER

The Contractor's Designer(s) shall develop a complete list of submittals during design. The Designer shall identify required submittals in the specifications. The list is to be used in preparing Submittal Register as approved by the Contracting Officer Representative. The example Submittal Register furnished with the Solicitation was created using Specsintact Software. The Contractor shall replace this example Submittal Register with the actual submittal register for the completed design specifications. The list is not all inclusive and additional submittals may be required. The attached and Contractor generated submittal register identifies only the submittal section, type of submittal, description of item submitted, paragraph number related to submittal item (section submittal paragraph if none listed), submittal classification (G), and submittal reviewer identifier (AE or AO). Any submittal without a submittal classification and submittal reviewer identifier is considered to be For Information Only (FIO). The submittal register generated by the Government Resident Management System (RMS) Software is used for tracking construction submittals and is referred to as ENG Form 4288 (RMS). Much of the same information contained on the Contractor generated submittal register will be included on the ENG Forms 4288 (RMS). The Contractor shall maintain a ENG Form 4288 (RMS) for the project in accordance with the attached ENG Form 4288 (RMS) Instructions. The Contractor will be furnished one (1) set of ENG Forms 4288 (RMS) at the preconstruction conference on which will be listed each item of equipment and material of each type for which fabricators' drawings, and/or related descriptive data, test reports, samples, spare parts lists, O&M manuals, or other types of submittals are required by the completed project specifications. The Contractor shall complete the appropriate columns as indicated on the attached ENG Form 4288 (RMS) Instructions and return six (6) completed copies to the Contracting Officer for acceptance within 20 calendar days after the preconstruction conference. Upon acceptance of the ENG Form 4288 (RMS) by the Contracting Officer, the ENG Form 4288 (RMS) will serve as a scheduling document for submittals and will be used to control submittal actions throughout the contract period. The ENG Form 4288 (RMS) ACTIVITY NO. is filled in when a network analysis system is a contract requirement. The TRANSMITTAL NO. and ITEM NO. shall be left blank and used later to record the respective transmittal and item number corresponding to those listed on the transmittal form entitled: "TRANSMITTAL OF SHOP DRAWINGS, EQUIPMENT DATA, MATERIAL SAMPLES, OR MANUFACTURER'S CERTIFICATES OF COMPLIANCE" (ENG Form 4025). The approved ENG Form 4288 (RMS) will become the scheduling document and will be used to control submittals throughout the life of the contract. The submittal register and the progress schedules shall be coordinated. Updates to the submittal register showing the Contractor action codes and actual dates shall be submitted monthly or until all submittals have been satisfactorily completed. When the progress schedule is revised, the ENG Form 4288 (RMS) shall also be revised and both submitted for approval.

1.10 SCHEDULING

Submittals covering component items forming a system or items that are interrelated shall be scheduled to be coordinated and submitted concurrently. Certifications to be submitted with the pertinent drawings shall be so scheduled. Adequate time (a minimum of 20 calendar days exclusive of mailing time) shall be allowed and shown on the register for conformance reviews by the Contracting Officer for submittals requiring Government review and for submittals which vary from the solicitation or

accepted 100% corrected design. No delay damages or time extensions will be allowed for time lost in late submittals.

1.11 TRANSMITTAL FORM (ENG FORM 4025)

The sample transmittal form (ENG Form 4025) attached to this section shall be used for submitting all submittals in accordance with the instructions on the reverse side of the form. These forms will be furnished to the Contractor. This form shall be properly completed by filling out all the heading blank spaces and identifying each item submitted. Special care shall be exercised to ensure proper listing of the specification paragraph and/or sheet number of the contract drawings pertinent to the data submitted for each item.

1.12 SUBMITTAL PROCEDURES

Submittals shall be made as follows:

1.12.1 Procedures

1.12.1.1 "G-AE" Submittals

All "G-AE" submittals shall be reviewed and approved by the Contractor's Quality Control Representative and Contractor's Designer prior to submittal to the Government. A conformance review is required by the Government on all "G-AE" submittals, prior to construction of the related items.

Except as noted below, data for all items listed as "G-AE" Submittals in the various sections shall be submitted in seven (7 copies). All seven (7) copies shall be submitted to the Area Engineer using the transmittal form. Items not to be submitted in multiples, such as samples and test cylinders, shall be submitted to the Area or Resident Engineer (as directed), accompanied by seven (7) copies of the transmittal form.

Each required submittal, which is in the form of a drawing, shall be submitted as seven (7) prints of the drawing. Drawing prints shall be either blue or black line permanent-type prints on a white background or blueprint and shall be sufficiently clear and suitable for making legible copies.

Catalog cuts and other descriptive data which have more than one model, size, or type or which shows optional equipment shall be clearly marked to show the model, size, or type and all optional equipment which is provided. Submittals on component items forming a system or that are interrelated shall be submitted at one time as a single submittal in order to demonstrate that the items have been properly coordinated and will function as a unit.

An additional copy of reviewed and approved submittals related to fire protection/detection systems shall be submitted to the Base Civil Engineering Office. The mailing address for these submittals shall be obtained at the preconstruction conference.

1.12.1.2 "G-AO" and FIO Submittals

Except as noted below, data for all items listed as "G-AO" Submittals in the various sections shall be submitted in five (5) copies. All five

copies shall be submitted to the Area Engineer for solicitation conformance review using the transmittal form. Items not to be submitted in multiples, such as samples and test cylinders, shall be submitted to the Area or Resident Engineer (as directed) accompanied by five (5) copies of the transmittal form.

Except as noted below, data for all items listed as "FIO" Submittals in the various sections shall be submitted in three (3) copies. All three copies shall be submitted to the Area Engineer using the transmittal form. Items not to be submitted in multiples, such as samples and test cylinders, shall be submitted to the Area or Resident Engineer (as directed) accompanied by three (3) copies of the transmittal form.

All "G-AO" and "FIO" submittals shall be reviewed and approved by the Contractor's Quality Control Representative and Contractor's Designer prior to submittal to the Government. A completed Government conformance review is required on all "G-AO" submittals, prior to construction of the related items.

The Government has the option to review any For Information Only submittals.

1.12.1.3 Base Civil Engineering Office Submittals

An additional copy of submittals related to the following systems: All interior finishes (i.e. carpet, , wallcovering, paint, laminates, etc.), All exterior finishes (i.e. stone, metal panels, storefront, glazing, etc.), All equipment Operation and Maintenance Manuals, Testing and balancing reports (HVAC, electrical, cathodic protection, and fire detection alarm), , DDC/EMCS Controls, Fire Protection System, Fire Detection System, and Telephone System Wiring Schematic shall be submitted concurrently to the Base Civil Engineering Office for their information. The mailing address for these submittals shall be obtained at the preconstruction conference.

1.12.1.4 Certificates of Compliance

Each certificate shall be signed by an official authorized to certify in behalf of the manufacturing company and shall contain the name and address of the Contractor, the project name and location, and the quantity and date or dates of shipment or delivery to which the certificates apply. Copies of laboratory test reports submitted with certificates shall contain the name and address of the testing laboratory and the date or dates of the tests to which the report applies. Certification shall not be construed as relieving the Contractor from furnishing satisfactory material, if, after tests are performed on selected samples, the material is found not to meet the specific requirements.

1.12.1.5 Purchase Orders

Copies of purchase orders shall be furnished to the Contracting Officer when the Contractor requests assistance for expediting deliveries of equipment or materials, or when requested by the Contracting Officer for the purpose of quality assurance review. Each purchase order issued by the Contractor or his subcontractors for materials and equipment to be incorporated into the project shall (1) be clearly identified with the applicable DA contract number, (2) carry an identifying number, (3) be in sufficient detail to identify the material being purchased, (4) indicate a definite delivery date, and (5) display the DMS priority rating, if applicable.

1.12.1.6 Operation and Maintenance Instructions and/or Manuals

Where required by various technical sections, operations and maintenance instructions and/or manuals with parts lists included shall be provided by the Contractor in quintuplicate, unless otherwise specified, and shall be assembled in three-ring binders with index and tabbed section divider and having a cover indicating the contents by equipment or system name and project title and shall be submitted to the Area Engineer for approval (after approval by the Contractor's Quality Control Representative), 90 days prior to final tests of mechanical and electrical systems, unless otherwise specified. Each operation and maintenance manual shall contain a copy of all warranties. If field testing requires these copies to be revised, they shall be updated and resubmitted for review within 10 calendar days after completion of tests. The Operations and Maintenance Instructions and/or Manuals shall be shown as a separate activity on the Contractor prepared construction schedule bar chart or network analysis system.

1.12.1.7 Interior/Exterior Finish Sample and Data

All submittals regarding color boards (Section 09915 COLOR SCHEDULE) for interior finish samples and data shall be submitted concurrently and all submittals for exterior finish samples and data shall be submitted concurrently. These color boards are in addition to the samples required under the specfic technical specifications listed as "samples".

1.12.2 Variations

Variations from the solicitation (contract requirements) or the accepted 100% corrected design must be approved by the Contractor's Designer, Contractor's Quality Control Representative and Contracting Officer. For submittals which include proposed variations, the column "variation" of ENG Form 4025 shall be checked and a serial letter shall be simultaneously prepared and sent to the Area Engineer referencing this variation. The Contractor shall set forth in writing the reason for any variations and clearly annotate such variations on the submittal. The narrative shall include documentation of the nature and features of the variation and why the variation is desirable and beneficial to the Government. When submitting a variation for acceptance, the Contractor warrants that the contract has been reviewed to establish that the variation, if incorporated, will be compatible with other elements of the work. The Contractor shall take actions and bear the additional costs, including review costs by the Government, necessary due to the proposed variation. In addition to the submittal review period specified above, allow ten (10) additional working days for consideration by the Government of submittals with variations. The Government reserves the right to rescind inadvertent action codes of submittals containing unnoted variations.

1.13 CONTROL OF SUBMITTALS

The Contractor shall carefully control his procurement operations to ensure that each individual submittal is made on or before the Contractor scheduled submittal date shown on the approved "Submittal Register."

1.14 SUBMITTALS (FINAL COPY)

Upon completion of review of submittals requiring Government conformance review or approval, the submittals will be identified as having received

satisfactory review by being so stamped and dated.

1.14.1 "G-AE" Submittals

The Contracting Officer has the option to review any submittal. Two (2) copies of "G-AE" submittals, for conformance review by the Government, will be returned to the Contractor, except for samples, test cylinders, and O&M manuals for which two (2) copies of the transmittal form only will be returned to the Contractor. The Government reserves the right to require the Contractor to resubmit any item found not to comply with the contract. All "G-AE" submittals shall be reviewed and approved by the Contractor's Designer and Contractor's Quality Control Representative prior to submittal to the Government.

1.14.2 "G-AO" Submittals

Two (2) copies of "G-AO" submittals for conformance review will be returned to the Contractor except for samples, test cylinders, and O&M manuals for which two (2) copies of the transmittal form only will be returned to the Contractor.

1.15 INFORMATION ONLY SUBMITTALS

Normally submittals for information only will not be returned. Approval of the Contracting Officer is not required on information only submittals. The Government reserves the right to require the Contractor to resubmit any item found not to comply with the contract. This does not relieve the Contractor from the obligation to furnish material conforming to the plans and specifications; will not prevent the Contracting Officer from requiring removal and replacement of nonconforming material incorporated in the work; and does not relieve the Contractor of the requirement to furnish samples for testing by the Government laboratory or for check testing by the Government in those instances where the technical specifications so prescribe.

1.16 STAMPS

Stamps used by the Contractor's Designer and the Contractor's designated Quality Control person on the submittal data to certify that the submittal meets contract requirements shall be similar to the following (use two stamps for submittals reviewed by both):

CONTRACTOR

(Firm Name)

_____ Approved

_____ Approved with corrections as noted on submittal data and/or attached sheets(s).

SIGNATURE: _____

TITLE: _____

DATE: _____

INSTRUCTIONS
ENG FORM 4288 (RMS)

1. The Contractor shall utilize the ENG Form 4288 (RMS) generated by the Government Residential Management System (RMS)software for tracking construction submittals. The Submittal Register information, columns (c) thru (f) from the Contractor generated Submittal Register, will be utilized by the Government to generate the ENG Form 4288 (RMS). The Government will furnish the Contractor a hard copy of the ENG Form 4288 (RMS) at the preconstruction conference. . The ENG Form 4288 (RMS) includes the following items and parties responsible for completing the information required on the ENG Form 4288 (RMS). The subparagraph headings below do not correspond to the Submittal Register column headings.

a. Activity Number: will be provided by the Contractor from his Network Analysis, if required, and when a network analysis is accepted.

b. Transmittal Number and Item Number: will be provided by the Contractor from ENG Form 4025 for each item.

c. Specification Paragraph Number: will be provided by the Contractor from the Submittal Register from column entitled "Specification Paragraph Number".

d. Description of Submittal: will be provided by the Contractor from the Submittal Register from column entitled "Description of Item Submitted".

e. Type of Submittal: will be provided by the Contractor from the Submittal Register from column entitled "Type of Submittal" or "Description of Item Submitted".

f. Classification: will be provided by the Contractor from the Submittal Register from column entitled "Classification".

g. Reviewing Office - Reviewer: will be provided by the Contractor from the Submittal Register from column entitled "Classification" or "Reviewer".

h. Contractor Schedule Dates: the Contractor will provide schedule dates for

"Submit Needed By" (Date the Contractor expects to submit an item. It is the Contractors responsibility to calculate the lead time needed for the government approval. Note if resubmittal is required it is the Contractors responsibility to make all adjustments necessary to meet the contract completion date.)

"Approval Needed By" (date the Contractor can receive approval and still obtain the material by need date.), and

"Material Needed By" (date that the material is needed at the site. If there is a network analysis it should reflect that date on the analysis.)

i. Contractor Action: Includes the following items: "Code" and "Submit to the Corps". These items will be completed by the Contractor and/or Contractor's Designer. The action codes will be one of the following:

A - Approved as submitted.

B - Approved, except as noted.
G - Other (specify)

j. Government Action: This item includes a Government Action "Code" and "Date" and is reserved for Government use. The Government reserves the right to review any submittal for contract compliance. Receipt of an Action Code "F - Receipt Acknowledged" or failure of the Contractor to receive an Action Code by the Government, does not mean that the submittal is in compliance with the contract requirements. For this design-build soclicitaion, unless noted otherwise by the Contracting Officer, the Action Codes for this form, when used by the Government, will be one of the following:

A - Reviewed for conformance. No except taken
B - Reviewed for conformance. Exceptions as noted.
C - Reviewed for conformance. Exceptions as noted. Refer to attached ____ sheet resubmission required.
D - Will be returned by separate correspondence.
E - Reviewed. Does not comply (See Attached). Resubmission required.
F - Receipt Acknowledged.
Fx - Receipt acknowledged, does not comply as noted with contract requirements.
G - Other (specify).

2. Reviewer Abbreviation code will be as follows;

G-AE - Approved by Contractor's Designer, Contractor's Quality Control Representative and Conformance Review by the Government, as applicable. Approval by the Contractor's Designer means that the submittal complies with Construction Set design submittal.

G-AO - Approved by Contracor's Quality Control Representative and Designer and conformance review by the Government.

For Information Only - All other submittals without a G-AO or G-AE abbreviation code, Approved by Contractors Quality Control Representative and/or Designer. The Government reserves the right review any submittal for conformance with the solicitation.

INSTRUCTIONS
ENG FORM 4025

1. DATE at the top of form will be the date submitted to the DOR which is to be completed by the Contractor.

2. TRANSMITTAL NO. Each new transmittal (i.e. G-AE, G-AO or FIO) shall be numbered consecutively for each specification section in the space provided in "Transmittal No.". This number will be the identifying symbol for each submittal. Example: "15400A-001", "15895A-001" "15895A-002", "16415A-001", etc. For each new submittal or for a resubmittal, the appropriate box must be marked. Resubmittals must be designated by their original sequential number followed by an ".1", ".2", etc. for each sequential resubmittal. Example: "15895A-001.1" (previous submittal No. 15895A-001).

3. TO: Box will contain the name and address of the office which will review the submittal (as designated by the Contracting Officer).

4. FROM: Box will be the name and address of the Contractor. Contractor is to complete this box.

5. CONTRACT NO. box will contain the Contractors construction contract number (e.g., DACXXX-XX-C-XXXX).

6. CHECK ONE box

a. CHECK ONE box (for transmittal/ retransmittal) will be completed by the Contractor with one box marked. If a resubmittal is provided last transmittal number will be added.

b. CHECK ONE box will be completed by the Contractor with one box marked for the submittal type.

7. SPECIFICATION SECTION NO. box will be completed by the Contractor. The number will be the five digit number found in the specifications. No more than one section will be covered with each transmittal.

8. PROJECT TITLE AND LOCATION box will be completed by the Contractor.

9. Column a, will be completed by the Contractor and will contain a different number for each item submitted in that transmittal. Once a number is assigned to an item it will remain the same even if there is a resubmittal.

10. Column b, will be completed by the Contractor. The description of each item on this form will be the descriptions provided on the submittal register. The Contractor shall submit each submittal register item all at once on one transmittal if possible. If a submittal register item can not be submitted all at once Contractor should note that in the remarks box.

11. Column c, will be completed by the Contractor. The information will be the appropriate submittal description number as described this Section or shown on the submittal register (e.g. SD-XX).

12. Column d, will be completed by the Contractor. The number of copies will be determined by the Contractor after review of submittal register for the classification of the item and after review of paragraph: SUBMITTAL PROCEDURES of this Section.

13. Column e, will be completed by the Contractor. The Contractor shall state all applicable paragraph numbers.

14. Column f, will be completed by the Contractor. The Contractor shall state all applicable drawing sheet numbers.

15. Column g, will be completed by the Contractor and/or Contractor's Designer. The action codes will be one of the following:

A - Approved as submitted.
B - Approved, except as noted.
G - Other (specify)

16. Column h, will be completely by the Contractor. A check shall be placed in this column when a submittal is not in accordance with the plans and specifications also, a written statement to that effect shall be included in the space provided for "Remarks".

17. Column i, is reserved for Government use and may or may not be provided. For this design-build soclicitaion, unless noted otherwise by the Contracting Officer, the Action Codes for this form, when used by the Government, will be one of the following:

A - Reviewed for conformance. No except taken.
B - Reviewed for conformance. Exceptions as noted.
C - Reviewed for conformance. Exceptions as noted. Refer to attached ____ sheet resubmission required.
D - Will be returned by separate correspondence.
E - Reviewed. Does not comply (See Attached). Resubmission required.
F - Receipt Acknowledged.
Fx - Receipt acknowledged, does not comply as noted with contract requirements.
G - Other (specify).

18. REMARKS box self explained.

19. Contractor Quality Control Manager must provide name and sign all Eng Form 4025 certifying conformance. In the space for the name and signature, also include a phone number where the CQC Manager may be reached.

20. Section II will be completed by the Contractor, unless approval is required by the Government.

See reverse side of ENG Form 4025 for additional instructions.

-- End of Section --

SUBMITTAL REGISTER

CONTRACT NO.

TITLE AND LOCATION
CONSOLIDATED SPACE GROUP OPS FAC, SCHRIEVER AFB, CO

CONTRACTOR

ACTIVITY NO	TRANSMITTAL NO	SPEC SECT	DESCRIPTION ITEM SUBMITTED	PARAG# RAPH	CLASSIFICATION	GOVT OR A/E REVWR	CONTRACTOR: SCHEDULE DATES			CONTRACTOR ACTION			APPROVING AUTHORITY					
							SUBMIT	APPROVAL NEEDED BY	MATERIAL NEEDED BY	ACTION CODE	DATE OF ACTION	DATE FWD TO APPR AUTH/ DATE RCD FROM CONTR	DATE FWD TO OTHER REVIEWER	DATE RCD FROM OTH REVIEWER	ACTION CODE	DATE OF ACTION	MAILED TO CONTR/ DATE RCD FRM APPR AUTH	REMARKS
(a)	(b)	(c)	(d)	(e)	(f)		(g)	(h)	(i)	(j)	(k)	(l)	(m)	(n)	(o)	(p)	(q)	(r)
		00800	SD-02 Shop Drawings															
			Equipment Room Drawings	1.22	G AO													
		01200	SD-11 Closeout Submittals															
			Equipment Warranty Booklet	1.2.5														
		01356	SD-07 Certificates															
			Mill Certificate or Affidavit	2.1.3														
		01400	SD-01 Preconstruction Submittals															
			Accident Prevention Plan		G AO													
		02560	SD-03 Product Data															
			Plant, Equipment, and Tools	1.9														
			Job Mix Formula	2.1.1	G ED													
			Mixture Proportions	2.3.1	G ED													
			SD-06 Test Reports															
			Initial Tests	2.11	G RE													
			Contractor Quality Control	3.2.1	G RE													
			Contractor Quality Control	3.4.4	G RE													
			Acceptability of Work	3.2.2	G RE													
			Acceptability of Work	3.4.5	G RE													
			Acceptability of Work	3.6.1	G RE													
			SD-07 Certificates															
			Asphalt Cement Binder	2.1.2	G RE													
			Bituminous Tack and Prime Coat	2.2	G RE													
			SD-08 Manufacturer’s Instructions															
			Manufacturer's Recommendations	3.4.3	G RE													
		15951A	SD-02 Shop Drawings															
			HVAC Control System	3.1.1														

SUBMITTAL REGISTER

CONTRACT NO.

TITLE AND LOCATION
CONSOLIDATED SPACE GROUP OPS FAC, SCHRIEVER AFB, CO

CONTRACTOR

ACTIVITY NO	TRANSMITTAL NO	SPEC SECT	DESCRIPTION ITEM SUBMITTED	PARAGRAPH #	CLASSIFICATION	GOVT OR A/E REVWR	CONTRACTOR: SCHEDULE DATES			CONTRACTOR ACTION			APPROVING AUTHORITY					
							SUBMIT	APPROVAL NEEDED BY	MATERIAL NEEDED BY	ACTION CODE	DATE OF ACTION	DATE FWD TO APPR AUTH/ DATE RCD FROM CONTR	DATE FWD TO OTHER REVIEWER	DATE RCD FROM OTH REVIEWER	ACTION CODE	DATE OF ACTION	MAILED TO CONTR/ DATE RCD FRM APPR AUTH	REMARKS
(a)	(b)	(c)	(d)	(e)	(f)		(g)	(h)	(i)	(j)	(k)	(l)	(m)	(n)	(o)	(p)	(q)	(r)
		15951A	[ ], [ ]															
			SD-03 Product Data															
			Service Organizations															
			[ ], [ ]															
			Equipment Compliance Booklet	1.6														
			Commissioning Procedures	3.4														
			Performance Verification Test	1.6														
			Procedures															
			Training	3.6														
			SD-06 Test Reports															
			Commissioning Report	3.6.2														
			[ ], [ ]															
			Performance Verification Test	3.5.3														
			SD-07 Certificates															
			Air Storage Tank	2.13.1														
			[ ], [ ]															
			SD-10 Operation and Maintenance															
			Data															
			Operation Manual	1.5														
			[ ], [ ]															
			Maintenance and Repair Manual	1.6														

TRANSMITTAL OF SHOP DRAWINGS, EQUIPMENT DATA, MATERIAL SAMPLES, OR MANUFACTURER'S CERTIFICATES OF COMPLIANCE *(Read instructions on the reverse side prior to initiating this form)*	DATE	TRANSMITTAL NO.

SECTION I - REQUEST FOR APPROVAL OF THE FOLLOWING ITEMS *(This section will be initiated by the contractor)*

TO:	FROM:	CONTRACT NO.	CHECK ONE: ☐ THIS IS A NEW TRANSMITTAL ☐ THIS IS A RESUBMITTAL OF TRANSMITTAL _____
SPECIFICATION SEC. NO. *(Cover only one section with each transmittal)*	PROJECT TITLE AND LOCATION		CHECK ONE: THIS TRANSMITTAL IS FOR ☐ FIO ☐ GOV'T. APPROVAL

ITEM NO. *a.*	DESCRIPTION OF ITEM SUBMITTED *(Type size, model number/etc.)* *b.*	MFG OR CONTR. CAT., CURVE DRAWING OR BROCHURE NO. *(See instruction no. 8)* *c.*	NO. OF COPIES *d.*	CONTRACT REFERENCE DOCUMENT		FOR CONTRACTOR USE CODE *g.*	VARIATION *(See instruction No. 6)* *h.*	FOR CE USE CODE *i.*
				SPEC. PARA. NO. *e.*	DRAWING SHEET NO. *f.*			

REMARKS

I certify that the above submitted items have been reviewed in detail and are correct and in strict conformance with the contract drawings and specifications except as other wise stated.

_____

NAME AND SIGNATURE OF CONTRACTOR

SECTION II - APPROVAL ACTION

ENCLOSURES RETURNED *(List by Item No.)*	NAME, TITLE AND SIGNATURE OF APPROVING AUTHORITY	DATE

INSTRUCTIONS

1. Section I will be initiated by the Contractor in the required number of copies.

2. Each transmittal shall be numbered consecutively in the space provided for "Transmittal No.". This number, in addition to the contract number, will form a serial number for identifying each submittal. For new submittals or resubmittals mark the appropriate box; on resubmittals, insert transmittal number of last submission as well as the new submittal number.

3. The "Item No." will be the same "Item No." as indicated on ENG FORM 4288-R for each entry on this form.

4. Submittals requiring expeditious handling will be submitted on a separate form.

5. Separate transmittal form will be used for submittals under separate sections of the specifications.

6. A check shall be placed in the "Variation" column when a submittal is not in accordance with the plans and specifications--also, a written statement to that effect shall be included in the space provided for "Remarks".

7. Form is self-transmittal, letter of transmittal is not required.

8. When a sample of material or Manufacturer's Certificate of Compliance is transmitted, indicate "Sample" or "Certificate" in column c, Section I.

9. U.S. Army Corps of Engineers approving authority will assign action codes as indicated below in space provided in Section I, column i to each item submitted. In addition they will ensure enclosures are indicated and attached to the form prior to return to the contractor. The Contractor will assign action codes as indicated below in Section I, column g, to each item submitted.

THE FOLLOWING ACTION CODES ARE GIVEN TO ITEMS SUBMITTED

A	--	Approved as submitted.	E	--	Disapproved (See attached).
B	--	Approved, except as noted on drawings.	F	--	Receipt acknowledged.
C	--	Approved, except as noted on drawings. Refer to attached sheet resubmission required.	FX	--	Receipt acknowledged, does not comply as noted with contract requirements.
D	--	Will be returned by separate correspondence.	G	--	Other (*Specify)*

10. Approval of items does not relieve the contractor from complying with all the requirements of the contact plans and specifications.

(Reverse of ENG Form 4025-R)

SECTION TABLE OF CONTENTS

DIVISION 01 - GENERAL REQUIREMENTS

SECTION 01332

DESIGN AND CONSTRUCTION DELIVERABLES/PROCEDURES

11/02; Rev 01/03

PART 1 GENERAL

1.1 SUMMARY
1.1.1 Section Includes
1.1.2 Section Excludes
1.2 REFERENCES
1.2.1 THE CONSTRUCTION SPECIFICATIONS INSTITUTE (CSI)
1.2.2 OMAHA DISTRICT CADD STANDARDS MANUAL
1.2.3 WEB SITES
1.3 NOT USED
1.4 DEFINITIONS
1.4.1 Contractor
1.4.2 Design
1.4.3 Design Drawings
1.4.4 Designer
1.4.5 Request for Proposal (RFP)
1.5 QUALITY ASSURANCE
1.5.1 Construction Personnel Experience
1.5.2 Designer Qualifications and Experience
1.6 SUBMISSION OF DESIGN DRAWINGS, SPECIFICATIONS AND DESIGN ANALYSES
1.6.1 Design Certification
1.6.2 Deviations
1.6.3 Field Inspection
1.6.4 Drawings
1.6.4.1 Software Requirements
1.6.4.2 RFP Drawings
1.6.5 Design Documents
1.6.6 Design Reviews
1.6.7 Document Packaging

PART 2 PRODUCTS (NOT APPLICABLE)

PART 3 EXECUTION

3.1 DRAWINGS
3.1.1 Drawings Format
3.1.2 Drawings Sequence
3.1.3 Drawings Required
3.2 SPECIFICATIONS
3.2.1 Format for Project Specifications
3.2.2 Reports
3.2.3 Construction Submittals
3.2.3.1 Submittals Register (Form)
3.3 DESIGN ANALYSES
3.3.1 Format
3.3.1.1 Part 1 - General Description.
3.3.1.2 Part 2 - Design Requirements and Provisions.

3.3.2 Calculations
3.3.3 Engineering Considerations and Instructions (ECI) for Field Personnel
3.3.3.1 Separate Appendix
3.3.3.2 Format
3.3.3.3 Distribution of ECI's
3.3.4 Requests for Information, Meeting Minutes and Comments
3.4 DESIGN CERTIFICATION
3.5 60 PERCENT DESIGN SUBMITTALS
3.6 100 PERCENT DESIGN SUBMITTALS
3.7 REVIEW BY GOVERNMENT AGENCIES
3.7.1 Distribution of Design Documents for Conformance Review
3.7.1.1 Submittal Items
3.7.1.2 Activity Distribution Addresses
3.7.1.3 60 Percent Design Distribution
3.7.1.4 100 Percent Design Distribution
3.7.1.5 100 Percent Corrected Design Distribution
3.7.1.6 Construction Set Distribution
3.7.1.7 As-Built Submittals
3.7.1.8 Design Submittal Alternative
3.7.2 Review Comments:
3.7.3 Using Automated Review Management System:
3.7.4 Delays
3.7.5 Reproduction (For Construction):
3.7.6 Government Design Review and Acceptance
3.7.6.1 Design Review Conference and Post-Design Review Conference Action:
3.7.6.2 Complete Design Documents
3.7.6.3 Accuracy and Completeness of Design
3.7.6.4 Responses to Review Comments
3.7.7 DD Form 1354, Transfer and Acceptance of Military Real Property
3.8 REVISIONS TO THE ACCEPTED DESIGN

-- End of Section Table of Contents --

SECTION 01332

DESIGN AND CONSTRUCTION DELIVERABLES/PROCEDURES
11/02; Rev 01/03

PART 1 GENERAL

Attachments: Attachment A, Design Certification and Transmittal Letter
DD Form 1354 - Transfer and Acceptance of Military Real Property
Instructions for Preparation of DD Form 1354

1.1 SUMMARY

1.1.1 Section Includes

a. Design

This section includes general requirements for developing and submitting a design including preparation of drawings, specifications, design analyses and other design deliverables conforming to the requirements contained in this section. Distribution requirements for design deliverables is also covered in this section. See Section 01336 60 PERCENT DESIGN REQUIRMENTS and Section 01338 100 PERCENT DESIGN REQUIREMENTS for specific requirements.

b. Construction

This section includes distribution requirements for the construction set of design deliverables and distribution requirements for DD Form 1354 and as-built drawings.

1.1.2 Section Excludes

This section does not include requirements for construction submittals which are specified in Section 01330, "Submittal Procedures."

1.2 REFERENCES

The references listed below form a part of this specification to the extent referenced.

1.2.1 THE CONSTRUCTION SPECIFICATIONS INSTITUTE (CSI)

CSI Masterformat Master List of Section Titles and Numbers

1.2.2 OMAHA DISTRICT CADD STANDARDS MANUAL

(a) Omaha District AutoCADD Standards will be made available to the successful offeror. AutoCADD Standard utilize the National CAD standards with Omaha District refinements concerning file names, layers, colors, line widths, details and symbols. See Section 01040 AS-BUILT DRAWINGS for a summary of Omaha District file format and font requirements. The Contractor shall be responsible for furnishing the required CAD software.

(b) Corps of Engineers Civil Standards.

Corps of Engineers Civil Standards (Adobe Acrobat .pdf format) are included

on the solicitation CD-ROM and is located under the folder "CADDSTD"

file: civilstd.pdf

AutoCADD Civil Standards are available at:

ftp://aecadd@ftp.nwo.usace.army.mil/ae/ under folder labeled "Standard Drawings". This ftp is password protected. The successful offeror will be given access rights to this ftp site.

1.2.3 WEB SITES

In addition to the web sites listed in this section, other RFP Sections may list web sites where design criteria references used in this solicitation package may be found.

NOTE: FOR ITEMS (a), (b), AND (c) BELOW, REFERENCES TO RECEIVING APPROVAL FROM OTHER GOVERNMENT AGENCIES FOR ALTERNATIVE DESIGNS ARE NOT APPLICABLE TO THIS PROJECT. THE CONTRACTOR IS THE DESIGNER WHEN READING THESE DOCUMENTS.

ALL ITEMS LISTED BELOW ARE CONSIDERED TO BE A PART OF THE RFP SOLICITATION DOCUMENT (AS APPLICABLE) AND THE RESULTANT CONTRACT.

(a) TECHNICAL MANUALS (TM), TECHNICAL INSTRUCTIONS (TI), AIR FORCE MANUALS (AFM), ENGINEERING TECHNICAL LETTERS (ETL), ARMY ARCHITECTURAL AND ENGINEERING DESIGN CRITERIA (AEI), SUSTAINABLE DESIGN DOCUMENTS, AND MILITARY HANDBOOKS (MIL HNDBK) can be obtained from the National Institute of Building Sciences Construction Criteria Base (CCB) on CD-ROM. Contact the CCB directly at (202) 289-7800 for an order form or obtain an order form at the following internet address: http://www.ccb.org/ccbsubscribe/Subsmain.asp. There is a regular annual subscription fee to the CCB (Price is noted on internet address, currently $700 per year). The CCB is available on CD-ROM or DVD. Selected references are also available for downloading in Acrobat .pdf file format at the following internet address:

http://www.hnd.usace.army.mil/techinfo.

Additional web sites are as follows:

(1) TECHNICAL MANUALS, ETL's, ETC.:

www.usace.army.mil/inet/usace-docs

Click on "Information", then the desired publication.

(2) AIR FORCE DESIGN CRITERIA:

http://afpubs.hq.af.mil

(3) UNIFIED FACILITIES GUIDE SPECIFICAITONS (UFGS)

This includes UFGS sections referenced, but not provided in the solicitation and other UFGS sections required in developing the project specifications. Unless noted otherwise these Guide sections are located on the CD-ROM issued with solicitation (Specsintact files under a directory labeled "Guides" An Index of available UFGS sections is included in

Attachment No. 3 of this RFP.

Specsintact software is available on the CCB referred to paragraph (a) above or may be downloaded at the following internet address:

http://si.ksc.nasa.gov/specsintact/software/software.htm

SI Version 3.0 (Version SI3.3.460) or later shall be used. The new unified submittal format shall be selected for file format. A copy of the software (SI Version 3.0) has been included on the CD-ROM issued with this solicitation. See folder: "Software", file "si3.exe".

1.3 NOT USED

1.4 DEFINITIONS

1.4.1 Contractor

Firm or company to whom award was made to design and construct the Consolidated Space Group Operations Facility, GLEN 043003, located at Schriever AFB, Colorado.

1.4.2 Design

Documents or deliverables, as defined in this section, prepared by or under the direct supervision of registered professional architects and engineers and proposed by the Contractor to meet the requirements of this solicitation.

1.4.3 Design Drawings

Documentation showing in graphic and quantitative form the extent, design, location, relationships, and dimensions of the construction to be provided by the Contractor. (Note: Shop Drawings, as defined in Section 01330, "Submittals Procedures" are not to be provided until after design drawings are determined satisfactory for construction.)

1.4.4 Designer

Architects and Engineers (A-E) associated with the Contractor who are responsible for (1) preparing the design documents, (2) checking construction submittals, considered extensions of design (A-E), for compliance with the prepared Construction set design documents and (3) have the qualifications and experience specified herein.

1.4.5 Request for Proposal (RFP)

Documents furnished to prospective offerors containing proposal information and specifying criteria and project requirements for design and construction of a Consolidated Space Group Operations Facility located at Schriever AFB, Colorado. The documents include this specification, attachments, and the RFP drawings.

1.5 QUALITY ASSURANCE

1.5.1 Construction Personnel Experience

The Contruction Personnel experience shall be as submitted per the requirements of Section 00110: PROPOSAL INSTRUCTIONS, SUBMISSION

REQUIREMENTS AND EVALUATION . If, because of reasons beyond the control of the construction firm, the named individuals are not able to fulfill this obligation, replacement personnel with similar skills and experience shall be presented for acceptance by the Contracting Officer. The Contractor shall obtain the Contracting Officer's wrtitten consent before making any substitution for these designated personnel.

1.5.2 Designer Qualifications and Experience

The designer qualifications and experience shall be as submitted per the requirements of Section 00110: PROPOSAL INSTRUCTIONS, SUBMISSION REQUIREMENTS AND EVALUATION. If, because of reasons beyond the control of the design team, the named individuals are not able to fulfill this obligation, replacement personnel with similar education and experience shall be presented for acceptance by the Contracting Officer. The Contractor shall obtain the Contracting Officer's wrtitten consent before making any substitution for these designated personnel.

1.6 SUBMISSION OF DESIGN DRAWINGS, SPECIFICATIONS AND DESIGN ANALYSES

1.6.1 Design Certification

Within each design submittal, the Contractor shall certify that all items submitted in the design documents (after construction award) comply with Division 1 specifications and mandatory requirements of the UFGS and designated CEGS. The criteria specified in this RFP are binding contract criteria and in case of any conflict, after award, between the RFP criteria and Contractor's submittals, the RFP criteria will govern unless there is a written and signed agreement between the Contracting Officer and the Contractor waiving a specific requirement. The Contractor shall present with the letter of transmittal for each design submittal (including the 100% corrected design (backcheck) submittal) a certification that the submittal (plans, specifications, design analysis, etc.) complies with the requirements stated above, similar to that shown at Attachment A of this section.

1.6.2 Deviations

Deviations from the RFP technical requirements shall be identified in the letter of transmittal and design certification letter. Deviations from the RFP technical requirements will be considered and accepted by the Contracting Officer, if the changes results in a significant improvement to the project or it exceeds the minimum RFP technical requirements.

1.6.3 Field Inspection

The Contractor shall verify field conditions which are significant to design, by field inspection, researching and obtaining all necessary existing facility as-built drawings and reproducing them for his own use as necessary, and discussing status with knowledgeable personnel. The information shall be reflected in the design documents.

1.6.4 Drawings

1.6.4.1 Software Requirements

All design drawings shall be done by the Contractor using AutoCAD 2002(.dwg) file format. Format shall conform to the Omaha District CADD Standards and the Omaha District CADD Design File and Sheet Naming Conventions. See

Omaha District CADD Standards requirements listed above. **(In the case where the RFP documents furnished to the Contractor follow procedure other than the Omaha District CADD Standards, the Contractor may utilize the format utilized on the RFP Contract Drawings furnished to him after award)**.

1.6.4.2 RFP Drawings

The drawings furnished with this solicitation will be furnished to the Contractor in AutoCAD 2002 (.dwg) file format within 30 calendar days of contract award.

1.6.5 Design Documents

Design documents, as required by the 60 percent and 100 percent design submittals stated hereafter, shall include construction drawings, specifications, design analysis, and other design deliverables for categories such as, but not limited to, architectural, interior design, structural, mechanical, electrical, grading, drainage, paving, and outside utility services. Specifications shall be in sufficient detail to fully describe and demonstrate the quality of materials, the installation and performance of equipment, and the quality of workmanship. Detailing and installation of all equipment and materials shall comply with the manufacturer's recommendations. The design analysis shall be for each discipline of work and shall include all features with the necessary calculations, tables, methods and sources used in determining equipment and material sizes and capacities, and shall provide sufficient information to support the design.

1.6.6 Design Reviews

A minimum of two design reviews during design will be held at Schriever AFB at the 60 percent and the 100 percent completion stages of the final design. A backcheck review will be made on the Corrected 100 percent design. Once that the Corrected 100 percent design is reviewed and determined to be satisfactory for the purpose of beginning construction, the Contractor shall prepare and distribute sets of documents for construction. The Contractor shall attend the design reviews, visit the site and make other trips as necessary during the design to accomplish the work.

1.6.7 Document Packaging

The 60 percent design submittal includes the 60 percent complete site and utility design and building design. These documents shall be packaged and stamped "For Review Only - 60% Design"; and each sheet of the drawings shall also be stamped. The 100 percent design submittal includes 100 percent complete site and utility design and building design and shall be stamped "For Review Only -100% Design", and each sheet of the drawings shall also be stamped. The backcheck design submittal(s) after the Government review of the 100 percent complete site and utility design and building design shall be stamped "100% Corrected Design"; and each sheet of the drawings shall also be stamped. The 100% Corrected Design submittal is for making corrections resulting from review comments and for preparing the final project documents. No additional time for completion of the contract will be granted to the Contractor due to insufficient design submittals. See paragraph 3.7.6 "Government Design Review and Acceptance" for additional requirements.

PART 2 PRODUCTS (NOT APPLICABLE)

PART 3 EXECUTION

3.1 DRAWINGS

Prepare, organize, and present drawings in the format specified herein. Provide drawings complete, accurate and explicit enough to show compliance with the RFP requirements and to permit construction. Drawings illustrating systems proposed to meet the requirements of the RFP performance specifications shall reflect proper detailing for each such system to assure appropriate use, proper fit, compatibility of components and coordination with the design analysis and specifications required by this section. Coordinate drawings to ensure there are no conflicts between design disciplines and between drawings and specifications. For specific drawing requirements, see Sections 01336 60 PERCENT DESIGN REQUIREMENTS and 01338 100 PERCENT DESIGN REQUIREMENTS. The following subparagraphs cover general drawing requirements.

3.1.1 Drawings Format

Full size drawings are considered 28 inches x 40 inches. Half-size drawings are considered 14 inches x 20 inches. Title block shall be as indicated in the Omaha District CADD Standards Manual or as shown on RFP drawings. Recommended drawing scales are specified in Sections 01336 60 PERCENT DESIGN REQUIREMENTS and 01338 100 PERCENT DESIGN REQUIREMENTS. The Cover Sheet of the Contractor prepared drawings shall bear the stamp or seal and signature of the registered architect or appropriate engineer responsible for the work and proposed to meet the RFP requirements. Drawing code numbers for the design and construction drawings shall be as follows:

AF 610-90-06

3.1.2 Drawings Sequence

Arrange drawings by design discipline in accordance with Omaha District CADD Standards Manual.

3.1.3 Drawings Required

As a minimum, the Contractor shall prepare and submit the following design drawings:

a. Title Sheet, Index of Drawings, Legend and Abbreviations and Soil Borings.

b. Civil Drawings

c. Utility Drawings (Water Supply, Wastewater, Gas, and Electrical)

d. Architectural Drawings

e. Interior Design Drawings

f. Structural Drawings

g. Mechanical Drawings

h. Plumbing drawings

i. Electrical Drawings

j. Fire Protection Drawings

3.2 SPECIFICATIONS

The Contractor shall develop project specifications utilizing the Division 1 Specifications furnished with this RFP; unedited Unified Facilities Guide Specifications (UFGS); designated specification sections furnished with this RFP; and the development of additional project specifications not covered by UFGS. Guide specifications are located on the CD-ROM issued with this solicitaton.

The Contractor shall utilize Specsintact software.

Minimum and recommend hardware requirements are as follows:

MINIMUM REQUIREMENTS	RECOMMENDED REQUIREMENTS
486 (Windows 95/98/ME/NT/2000) Pentium NT/2000	Pentium 133 - Windows 95/98/ME Pentium 266 NT/2000
16MB RAM (Windows 95/98) 32MB RAM (Windows NT/ME) 64MB RAM (Windows 2000)	32MB RAM (Windows 95/98) 64MB RAM (Windows NT/ME) 128MB RAM (Windows 2000)
24MB (local) 56MB (Network) Free Hard Drive Space	50 MB (local) 75 MB (Network) Free Hard Drive Space
SVGA Monitor	SVGA Monitor with 800 x 600 resolution
3 1/2 inch 1.44 MB floppy drive	3 1/2 inch 1.44 MB floppy drive
CD ROM Drive	CD ROM Drive
Laser Printer	Laser Printer

Note: Additional Hard Drive space is required for storing project specifications and masters.

a. Technical Specifications

The Contractor shall be required to use unedited UFGS and designated unedited CEGS sections for developing project specifications. Specification paragraphs and subparagraphs shall <u>not</u> be rewritten to lessen the quality of the original technical specification sections, unless directed otherwise. The technical guide specifications describe the type and quality of material and installation normally acceptable for Construction, and often represent specific agreement between the Government and the applicable industry. The provision of the technical guide specification should not be changed without justification. Justifications and identification for additional materials shall be identified in the design analysis under the appropriate design discipline. Designer notes shall not appear in any design submittals. Only bracketed choices and inapplicable items shall be marked for deletion. These items shall be removed in corrected 100 percent specifications submittal. The Contractor shall complete the editing of all options in these specifications. Where

designer notes are provided, the Contractor shall edit the choice in accordance with the recommendations and guidance of the Notes, except where specific guidance has been provided with this RFP (i.e. submittal paragraph). See additional requirements in Sections 01336 60 PERCENT DESIGN REQUIREMENTS and 01338 100 PERCENT DESIGN REQUIREMENTS.

b. Editing Technical Specifications (Designated CEGS or UFGS)

(1) Incorporating Established RFP Requirements into Guide Specifications

Where specific requirements in regards to materials, methods and end function requirements are provided in the edited RFP Division 1 provided in this RFP, the unedited Unified Facilities Guide Specifications (UFGS) and designated unedited CEGS (Omaha) shall be edited to reflect these requirements. Variations to these requirements will not be permitted, unless authorized as a design deviation by the Contracting Officer.

(2) Requirements of Guide Specifications Not Established By RFP Requirements

Where specific direction has not been provided in regards to materials, methods and end function requirements, the final requirements will be a result of the completed design by the Contractor.

The applicable unedited UFGS and designated CEGS (Omaha) Sections, Divisions 2 through 16, provide requirements for a variety of materials and systems. Deleting applicable requirements from these specifications will not be permitted, unless accepted as a design deviation by the Contracting Officer.

(3) ADDITIONS: If the specifications of the UFGS or designated CEGS does not cover a feature that is in the project, new sentences and/or paragraphs shall be inserted in the proper locations to adequately cover the feature of work. Additions shall not lesson the quality of materials indicated by the specifications. If a new material is added, it shall be properly referenced in "Applicable Publications," "MATERIALS," "SUBMITTAL," "TESTS," and "INSTALLATION" paragraphs, as applicable.

(4) DELETION OF INAPPLICABLE TEXT MATERIAL, AS NECESSARY, TO TAILOR THE SPECIFICATIONS TO FIT THE PROJECT: After deletion has been made to all inapplicable paragraphs, subparagraphs, choices, and schedules from the body of the specifications (including but not limited to the correction of lists in "Submittals," "Tests," and "Installation" paragraphs), delete all nonapplicable references listed in the preceding "APPLICABLE PUBLICATIONS" and "MATERIALS" paragraphs. Deletions shall not lesson the quality of materials indicated by the specifications.

(5) Do not remove any special code markings for submittals, references, tests or section references, unless the text is not required.

(6) REFERENCES TO SPECIFICATION SECTIONS. The Contractor shall be responsible for coordinating section references, along with the technical requirements, to specific specification sections (number and title) within the project specifications. Section references (title

and number) shall be revised to reflect the titles and numbers of specification sections used.

(7) REFERENCES. The Contractor shall be responsible for coordinating references or publications referenced in the text of each specfications with those references listed at the beginning of each section. See paragraph: Reports below. The Specsintact Software removes references or publications not referenced in the text from the Reference Article, when printing from the Jobs menu.

(8) SUBMITTALS. Each section of the specifications includes a submittal paragraph which lists all applicable Contractor submittals.Submittals shall be properly marked as outlined in the Specsintact documentation and in this section. These codings are used for automatic generation of the Submittal Register in the Specsintact Software. These codings must NOT be deleted from the text, unless the submittal is not required. The Submittal Item text between the coding shall be identical (word for word, including punctuation and spacing) to the paragraph text in the reference paragraph(s). Text may be either upper or lower case letters. An example of an submittal paragraph is listed below with text telling what each item stands for directly below each listing.

"1._ SUBMITTALS

Government review is required for submittals with a "G" designation; submittals not having a "G" designation are for information only. When used, a designation following the "G" designation identifies the office that will review the submittal for the Government. The following shall be submitted in accordance with Section 01330 SUBMITTAL PROCEDURES:

SD-02 Shop Drawings

Fire Sprinkler Design Drawings; G-AE

SD-03 Product Data

Meters;

Regulators

SD-08 Manufacturer's Instructions

Dielectric Unions

Pressure Reducing Valves

SD-10 Operation and Maintenance Data

Wet Pipe Sprinkler System; G-AO

See Section 01330: SUBMITTAL PROCEDURES for the list of Submittal Descriptions and Numbers and for submittal classification and further explanation of the submittal process.

Submittal Classifications (G-AE, G-AO, and FIO) are as follows:

G-AE - G-AE submittals are those that involve extensions of design (those that show design work performed by the Construction Contractor not

previously included in the 100% Corrected for Construction drawings to include color boards and finish samples for major finishes such as paint, floor coverings, wall coverings, etc), or changes/variation in design. These submittals require knowledge of the design and must be reviewed and approved by the Contractor's Designer of the responsible design organization. The Government will review all G-AE approved submittals for conformance to the Solicitation. The Government will review all submittals designated as deviating from the Solicitation or completed design.

Typical G-AE type submittals:

Extensions of Design:

Note, for the following examples, the responsible designer will determine the criticality of each "extension of design" submittal and may, with the concurrence of the field office, change the review office to the field office.

1. Structural steel
2. Lawn irrigation systems
3. Concrete reinforcement and Pre-cast Concrete
4. Millwork/casework
5. Masonry reinforcement
6. Fire Sprinkler Systems
7. Fire Detection Systems
8. Interior signage
9. Cathodic protection
10. Asbestos abatement layouts
11. Control systems
12. Security systems
13. Interior / Exterior Finishes
14. Furniture Systems
15. Pavement Concrete mix designs (special use - non routine, e.g., Airfield Paving)
16. Asphalt mix designs (special use - non routine, e.g., Airfield Paving)
17. Color boards
18. Finish samples for major finishes

Changes/Variation to Design:

· Design changes in material or function to the design

G-AO - G-AO submittals are those that need to be reviewed for conformance to the contract by either the Area or Resident Office (as directed). In general, G-AO submittals are those involving test procedures/reports, minor finish samples such as caulking and sealants, toilet accessories, etc and O&M Manuals and related information. In addition, G-AO submittals would include items which vary from the Solicitation package or 100% Corrected Design and other items as designated by the Contracting Officer's Representative. Submittals shall be reviewed and approved by the Contractor's Quality Control Representative and Designer (if applicable), prior to submittal to the Government. Typical G-AO submittals are listed below.

· All Testing, Adjusting, and Balancing (TAB) submittals
· All System type testing procedures and acceptance reports (e.g., Fire Detection, Fire Protection, Security/Communication Systems, etc.)

· All O&M Manuals
· Other final operational type submittals such as Spare Parts Data, Framed Instructions, Warranty Information, etc.
· Training plans and schedules for Systems Training
· Minor finish samples

FIO - For Information Only. These submittals do not compliance review by the Government. These submittals shall be approved by the Contractor's Quality Control Representative and/or Designer, prior to submittal to the Contracting Officer's Representative. NOTE: "FIO" IS ANY SUBMITTAL ITEM THAT DOES NOT HAVE A "G-AE" OR "G-AO" CLASSIFICATION. SEE PARAGRAPH BELOW ON HOW TO CORRECTLY IDENTIFY A FIO SUBMITTAL.

For each submittal requirement in the Guide specification, designers shall indicate a submittal type (G-AE, G-AO, or FIO) or shall delete the requirement for the submittal. To designate a submittal item as FIO, mark the semi-colon following the submittal item and also the submittal tags up to the Item tag for deletion (i.e. "; [ ], [ ]"). Designers shall identify submittal classifications for all required submittals.

(9) USE OF UFGS SECTIONS

UFGS sections are joint effort of the U.S. Army Corps of Engineers (USACE), the Naval Facilities Engineering Command (NAVFAC) and the Airforce Civil Engineer Support Agency (AFCESA). Unless directed to otherwise, use UFGS sections. Available UFGS sections include sections that have a 5 digit section number with either the letters "A" or "N" following the section number or no letter following the section number. The letters designate the specification proponent ("A" is for USACE and "N" is for NAVFAC). The Contractor shall use sections with the letter "A" following the section number or sections with no letter following the section number. Sections with the letter "N" following the section number shall not be used unless there is no other available section, the solicitation directs the use of these sections or the available sections do not meet the solicitation requirements. Do not use Division 1 Sections that have the letter "N" following the section number. Where UFGS sections include tailoring options for both Army and Navy, use the Army tailoring option. Where conflicts exist that cannot be resolved, the Contracting Officer shall be contacted to resolve the issue.

c. Developing Additional Project Specifications.

If the need should arise for developing project specifications on materials/items not covered in by the UFGS or desginated CEGS, the Contractor shall develop specifications utilizing commercial Construction Specifications Institute (CSI), 16 Division, 3 Part Section Format. These specifications shall conform to the applicable criteria requirements indicated in the solicitation. For these specification sections, write at the Mediumscope level of detail as described in CSI Masterformat. Use Mediumscope level section numbers and titles as identified in CSI Masterformat. Adjust section numbers which conflict with the specifications used in the Project Specifications. Each of these developed specification sections shall be in the same format as the CSI format specifications included in the UFGS (including the submittal paragraph). Commercially available guide specifications such as "SpecText" published by The Construction Specifications Institute and "MasterSpec" published by The American Institute of Architects or Unified Facilities Guide Specifications

(UFGS) may be used, subject to the format, coding and submittal paragraph requirements. References to the "Architect/Engineer" and the "Owner" shall be changed to refer to the "Government" or "Contracting Officer," as appropriate. The specifications shall clearly identify, where appropriate, the specific products chosen to meet the requirements of the specifications (manufacturers' brand names and model numbers or similar product information). The Contractor shall be responsible for coordinating references, along with the technical requirements, to specific specification sections (number and title) within the project specifications. Section references (title and number) shall be revised to reflect the titles and numbers of specification sections used.

d. Division 1 Sections

Include Division 1 specifications sections (01040 AS-BUILT DRAWINGS, 01200 WARRANTY OF CONSTRUCTION, 01320A PROJECT SCHEDULE, 01330 SUBMITTAL PROCEDURES, 01355 ENVIRONMENT PROTECTION, 01451ACONTRACTOR QUALITY CONTROL, 01565 (FEDERAL FACILITIES COLORADO) NPDES PERMIT REQUIREMENTS FOR STORM WATER DISCHARGES), 01670 RECYCLED/RECOVERED MATERIALS contained in the RFP as part of the project specifications without change, except where directed otherwise. Copies of these sections and other Division 1 specifications included with the RFP are included on the solicitation CD-ROM in Specsintact. Any other Division 1 Specifications required by the Contract shall be the responsibility of the Contractor. See Attachment 3 for a list of Specifications and their defined usage. The Contractor will be responsible for posting any amendments issued during the advertisement period.

3.2.1 Format for Project Specifications

Submit the project specification, including a Cover page and Table of Contents, printed with a word processor (Using Specintact software) using good quality white paper. For the 60 percent and 100 percent design submittals, editing of the CEGS and UFGS shall be shown as indicated in the Specsintact documentation for text deletions and for text insertions. The corrected 100 percent specifications with review comments incorporated shall be cleaned up (markings for insertion and deletion removed) and submitted in both hard copy and on magnetic media ("Specsintact " micro computer software package). The Cover page and attachments to specification sections shall be prepared in a Microsoft Word compatible with Microsoft Word 2000 format. Carbon copies are not acceptable.

Format shall be as outlined in the Specsintact documentation.

Each specification section shall include a Section Table of Contents which is combined with the page numbering of the specification section.

The Cover page shall be similar to the RFP Cover page and shall include:

a. Project title, Project Number, activity and location

b. Construction contract number

c. Construction Contractor's name and address

d. Design firm's name and address

e. Names of design team members (Designers of record) responsible for each Contractor prepared technical discipline of the project specification

f. Name and signature of a Principal of the design firm

The Table of Contents shall list the 16 Divisions contained in CSI format and the specification section numbers and titles contained in the project specification.

3.2.2 Reports

The Contractor shall submit the following Specsintact reports with the 100 percent and Corrected 100 percent design submittals: Address Verification, Reference Verification, Section Verification, Bracket Verification, Submittal Verification, Submittal Register and any other reports requested by the Contracting Officer. References shall be reconciled when printing reports. The reports to be submitted for review shall be after the Contractor has corrected the errors generated by these reports. From the errors generated by the reference verification reports, fix only those errors where there is a discrepancy with the issue date of a publication (i.e., NFPA 70, revise to the latest code requirement). Address, Reference and Submittal Reconcilation shall be completed prior to submittal of the 100 percent design.

3.2.3 Construction Submittals

All construction submittals shall be in accordance with Section 01330, "SUBMITTAL PROCEDURES".

Construction submittal types and products, including the submittal description numbers and data package numbers, shall be included in the specification sections, where required. When appropriate, use specific product terms instead of the generic product terms contained in the specifications sections (e.g., asphalt shingles, built-up roofing, EPDM single ply, etc. vs roof covering; concrete masonry units, brick, metal siding, etc. vs exterior skin; mineral fiber board, block, batt or blanket, polystyrene, polyurethane, polyisocyanurate board vs insulation).

3.2.3.1 Submittals Register (Form)

Prepare and maintain a Submittals Register. The Submittal Register (ENG Form 4288 "Submittal Register" shall be prepared using Specsintact Software. Additional instructions for completing the form are contained in Section 01330, "Submittal Procedures."

Fill in columns "c" through "f" and submit with the 100 percent design submittal. The Submittal Register will be returned to the Contractor along with the reviewed and accepted design.

Resubmit the Submittal Register as a construction submittal as required in Section 01330, "SUBMITTAL PROCEDURES." The Contracor shall provide an electronic copy of the accepted submittal register (navy4288.txt file), generated by the Specsintact software, three (3) working days prior to the pre-construction conference. Remaining columns will be filled in at the appropriate time and by the appropriate authorities during construction.

3.3 DESIGN ANALYSES

Prepare design analyses (basis of design and calculations) for each design discipline. Specific requirements relative to the technical content to be provided are specified herein and in Section 01336 60 PERCENT DESIGN

SUBMITTALS and Section 01338 100 PERCENT DESIGN SUBMITTALS. The design analyses shall include a basis of design and calculations for each discipline. The design analyses shall be a presentation of facts to demonstrate that the concept of the project is fully understood and that the design is based on sound engineering. The design analysis for each discipline shall include:

a. A basis of design consisting of:

(1) An introductory description of the project concept which addresses the salient points of the design;

(2) An orderly and comprehensive documentation of criteria, rationale, assumptions and reasoning for system selection.

b. Calculations required to support the design.

c. Project Engineering Considerations and Instructions (ECI) for Final Design Analysis.

The Contractor shall not make reference to the RFP [solicitation][task order] to avoid stating the requirements for the basis for design.

3.3.1 Format

The design analysis shall include: a cover page indicating the stage of design "PRELIMINARY DESIGN ANALYSIS": for 60 percent design submittal and "FINAL DESIGN ANALYSIS" for 100 percent design submittal, the project title "Consolidated Space Group Operations Facility, GLEN 043003", fiscal year and program funding "FY 2003 MCAF", location "SCHRIEVER AFB, COLORADO", who prepared the design analysis "Prepared By:" followed by Name of AE and Construction Contractor, location of AE and Construction Contractor Office involved with the design, and construction contract number; table of contents; and tabbed separations for each part of design analysis for quick reference. The cover sheet shall indicate the volume number and total number of volumes for the project. Provide a cover sheet for each volume. Submit design analyses prepared on 8 1/2 by 11 inch white paper. The design analysis for all disciplines shall be bound in one volume, excluding calculations. Multiple volumes for individual disciplines, appropriately numbered, may be provided, when required. For Electronic media requirements, see the NOTES for the Construction Set Distribution (paragraph 3.7.1.6). Narratives shall be provided in decimal paragraph numbering system (i.e. 1, 1.1, 1.1.1, 1.1.1.1 etc.). Narratives shall be an original document that does not copy the text from the RFP document sections, unless directed otherwise and shall be written in the same tense (Past or Present) for the entire design analysis. Each part of the design analysis shall include part number and page numbering (consecutive page numbering for each part). Organize design analysis narrative into the following parts, as follows:

3.3.1.1 Part 1 - General Description.

This part will provide statements of purpose, authority and applicable criteria. A description of the project and a summary of the economic factors influencing the choice of the civil, architectural, structural, mechanical, electrical, fire safety, water supply and wastewater disposal systems used in the project shall be provided along with an indication of how initial and life costs were considered.

a. Purpose. Include the following statement under the heading of "PURPOSE":

"The Facility is required to co-locate the Reserve Space Group and four newly activated operational squadrons. The project is required to consolidate AFSC gained AF Reserve Operational squadrons and the group leadership and associated functions. Space is required for operational management biefing/debriefing, planning, training, testing, safety, mobility functions, technical order libraries, standardization, eveluation, locker rooms and scheduling."

b. Authority. Provide the following authorization statement under the heading "AUTHORITY" for the project: (Furnished by Michael Armstrong/Progams and Project Manager)

"The preparation of design documents was authorized by Design Directive (Furnished by Michael Armstrong/Progams and Project Manager)"

c. Applicable Criteria. Provide a list of the general criteria that pertains to all disciplines used in the design. Specific criteria used in a particular engineering/architectural discipline shall be listed in the text of the appropriate discipline in Part 2 of the design analysis. Such criteria shall be referenced accordingly.

d. Project Description. Provide a description of the project and summary of economic factors influencing the choice of materials and systems used in the project.

3.3.1.2 Part 2 - Design Requirements and Provisions.

This part of the design analysis shall provide statements of factors considered and provided in the design along with supporting justification of design decisions and design calculations. Include narratives for each of the following areas or disciplines. See Sections 01336 60 PERCENT DESIGN REQUIREMENTS and 01338 100 PERCENT DESIGN REQUIREMENTS for specific requirements.

a. Civil

b. Water Supply and Wastewater

c. Architectural

d. Interior Design

e. Structural

f. Mechanical

g. Electrical

h. Fire Protection

i. Environmental Protection, Compliance and Permits

j. Not Used

k. Sustainable Design

3.3.2 Calculations

All calculations shall be placed in separate appendix volume(s). Calculations shall include a cover page similar to the design analysis narrative cover page, a table of contents, index page and a summary of criteria for each appendix on the first pages and the project title, and location identified on every page of the calculations. All calculation pages shall be clearly legible and photo-ready. Each discipline which requires calculations shall be consecutively numbered (Example: A-1, A-2, A-3 etc. for Water Supply and Wastewater Calculations and B-1, B-2, B-3, etc. for Structural Calculations) and the date. Cite criteria from which the calculations, rationale, and formulae are extracted by publication number, title, edition and page number. The cover page and each page of calculations shall also include the names of the persons originating and checking the calculations. The person checking the calculations shall be a registered professional engineer other than the originator. In addition, the signature and seal of the appropriate registered professional engineer responsible for the work shall appear on the cover page of the calculations for each discipline. Each appendix index page shall list subtopics (e.g. for Structural - Loads, Materials, References, Wind Analysis, Footing Design, Wall Design, Column Design, etc.) with pages numbers where each of these subtopics can be found in the calculations.

Computer printouts shall be consecutively page numbered and identified similar to the calculations. Identify the computer program name, source, and version. All schematic models used for computer input shall be provided.

3.3.3 Engineering Considerations and Instructions (ECI) for Field Personnel

3.3.3.1 Separate Appendix

Under a separate appendix in the Final Design Analysis, the Design-Build Contractor shall include the following items:

a. Features critical to the quality of the final construction product requiring special attention.

b. Submittals requiring special attention during construction.

c. Special user requirements or instructions.

d. Assumed field conditions, pertinent significant aspects, or critical phases of the project used as a basis of project design.

3.3.3.2 Format

Format for ECI's shall include the following information:

"ENGINEERING CONSIDERATIONS AND INSTRUCTIONS

Project Name:_____

Location: _____

Designer Name:_____ Phone:_____

Discipline:_____

Design-Build designers have prepared the following engineering considerations and instructions (ECI). These ECI's should be followed during the construction of the above project. If you have any questions, contact the appropriate Design-Build designer."

3.3.3.3 Distribution of ECI's

In addition to including ECI's in a separate appendix of the final design analysis and after acceptance of the 100 percent corrected design and prior to the start of construction, the design-build Contractor shall e-mail a copy of the ECI's to the appropriate U.S. Army Corps of Engineer's Field representative for his consideration with a copy also sent to the appropriate individual in following office(s): CENWO-CD-QR and CENWO-PM-M. The Government will provide the names and e-mail addresses to the design-build Contractor at either the pre-design or pre-construction conference.

3.3.4 Requests for Information, Meeting Minutes and Comments

Copies of Requests for Information (RFI) made by the Contractor to the Government shall be included as an appendix to the design analysis. An index of each RFI, which documents the RFI number, the date RFI given to Government, the date the RFI is answered and the Action Response provided by the Government.

A copy of all meeting minutes and design review comments (if any) with action responses shall be included as an appendix to the design analysis.

Appendices for RFI's and Meeting Minutes and design review comments shall have page numbering that follows the same format as for Calculations listed above.

3.4 DESIGN CERTIFICATION

The Contractor shall provide certification signed by an officer of the Contractor's company attesting that the drawings, specifications and design analyses prepared for the construction of the facility meet the requirements of the RFP. The certification shall accompany the submission of the design documents along with names and disciplines for the designers of record. This design certification shall include a list of deviations (variations) from the solicitation or accepted final design. Prepare the design certification and transmittal letter in the format shown on Attachment A included at the end of this section.

3.5 60 PERCENT DESIGN SUBMITTALS

See Section 01336 60 PERCENT DESIGN REQUIREMENTS.

3.6 100 PERCENT DESIGN SUBMITTALS

See Section 01338 100 PERCENT DESIGN REQUIREMENTS.

3.7 REVIEW BY GOVERNMENT AGENCIES

3.7.1 Distribution of Design Documents for Conformance Review

(a) Government agencies shall receive review documents thirty (30) days prior to review conferences. The documents will be in their then-present "on-board" design status (except for the 100% design submittal). Agencies

reviewing documents, and in the quantities indicated, are listed below. All documents must contain an index of contents. Work shall continue during the review period between the 60% design submission and the 60% design review conference. Work shall be 100% complete when the 100% design is submitted. Design work shall not continue during the review period between the 100% design submission and the 100% design review conference. All submittals shall be transmitted by **express mail**. Originals of transmittal letters should be sent to the Omaha District and copies should accompany each mail package. Transmittal letters shall indicate distribution by use of the "ATTN" code shown in the address. Design document set shall include the items listed below. Some of the Construction submittals are also listed. Design submittals shall be submitted as a complete package. The distribution listed below also applies to all design reviews and design package accepted for construction.

(b) If the Government requires more time than the thirty (30) days given, prior to either of the review conferences, the Contractor will be granted an extension of time equal to the number of calendar days of delay.

(c) The Government requires fourteen (14) days to review 100 Percent Corrected Design submittals after receipt of these documents. If the Government requires more than the days given, the Contractor will be granted an extension of time equal to the number of calendar days of delay.

3.7.1.1 Submittal Items

The submittal items listed below are intended to identify the different design submittals required throughout the design process and select submittals required during and at the completion of Construction. Each submittal item has an Abbreviation, which will be used in conjunction with the number of required copies. See paragraphs 3.7.1.3 through 3.7.1.7 for required copies for distribution.

SUBMITTAL ITEM - **ABBREVIATION**

Design Analysis Narrative - **DANar**
Design Analysis Calculations - **DACalcs**
Specifications - **Specs**
Specification Error Reports - **SpecER**
Submittal Register - **SubReg**
Drawings (1/2 size) - **Dwg-1/2**
Drawings (Full size) - Dwg-full
Meeting Minutes with Annotated Comments and Other Attachments - **MMin**
As-Built Drawings - **Asblt**
Electronic Media Drawings - **EMDwg**
Electronic Media Specifications - **EMSpecs**
Electronic Media Design Analysis - **EMDA**
Design Certification Letter - **DCLet**
Color Board - **ColBd**
DD Form 1354 - Transfer and Acceptance of Military Real Property - **DD1354**
Environmental Protection Plan - **EP Plan**
Engineering Considerations and Instructions - **ECI**
Renderings - **Rend**
Backcheck Review Comments - **Brvw Cmnts**

3.7.1.2 Activity Distribution Addresses

Engineering Division
Attn: CENWO-PM-M (Michael Armstrong)

U.S Army Engineer District, Omaha
106 South 15th Street
Omaha, NE 68l02-1618

Construction Division
Attn: CENWO-CD-Q
U.S. Army Engineer District, Omaha
106 South 15th Street
Omaha, NE 68l02-1618

Rocky Mountain Area Engineer
Attn: CENWO-CD-RM, Attn:John Offen
U.S. Army Corps of Engineers
1050 South Academy Boulevard, Suite 100
Colorado Springs, Co 80914-2370

310th Space Group
ATTN: 310 SG/XP, Attn: MAJ T. Kueker-Murphy
300 O'Malley Ave., Suite 126
Schriever AFB, CO 80912

50 Civil Engineering Squadron
ATTN: 50 CES/CECC, Attn: Jeff Murray
300 O'Malley Ave., Suite 19
Schriever AFB, CO 80912-5019

Headquarters Air Force Space Command
ATTN: HQ, AFSPC/CECE, Attn:CPT Boswell/Pete Cramer
150 Vandenberg Street, Suite 1105
Peterson AFB, CO 80914-4150

3.7.1.3 60 Percent Design Distribution

See paragraphs above explaining Submittal Abbreviation Codes and Activity Distribution Addresses. The number of copies required for each submittal item are listed below.

Activity Submittal Item	CENWO-PM-M	CENWO-CD-Q	CENWO-CD-RM	HQ, AFSPC/CEC	50 CES/CECC
DANar-	10	2	4	1	8
DACalcs-	6	2	2	1	4
Specs-*(1)	10	2	4	1	8
Dwg-1/2-	10	2	4	1	8
MMin-*(2)	10	2	4	1	8
EMDwg-	1*(3)	-	-	-	-
DCLet-	10	2	4	1	8
ColBd-	1	-	-	1	1
Rend-*(4)	1	-	-	1	1
EP Plan	1	-	1	-	1

Activity Submittal Item	310 SG/XP
DANar-	2
DACalcs-	1
Specs-*(1)	2
Dwg-1/2-	2
MMin-*(2)	2
EMDwg-	-
DCLet-	1
ColBd-	1
EP Plan	1
Rend-*(4)	1

*60 PERCENT SUBMITTAL NOTES:

Specific submittal requirements are identified in Sections 01332 and 01336

*(1) Copy shall show deletions and insertions (Revisions On) for all UFGS and designated CEGS specifications submitted. Process and Print Options for each section furnished shall include the following minimum requirements: Under "Sections" Print/Process Sections and Renumber Paragraphs boxes are checked; Under "Reports" a Section Table of Contents (Include Without Scope and Combine sections and section tables of contents); Under "Options" Section Dates shown, Units of Measure as english, Tags are Hidden, Notes are hidden, Revisions are shown, Start Page Numbering with "1", and Restart for each section box is checked; and Under "Header/Footer" jobtitle and jobname as a Header and Section number and Page number as a footer (similar to format shown on this section of the RFP).
*(2) To be submitted after Review Conference per requirements of this section.
*(3) Electronic Media Drawings:

Fifteen (15) percent of all drawings (exludes Cover Sheet, Vicinity Map, Location Plan and Indexes), representative of all design disciplines, shall be submitted in AutoCAD 2002 on CD-ROM to verify that the CADD standards being specified are complied with.

Provide a CD, 100MB ZIP disk or 3.5" floppy of the following drawings:

- interior design furniture footprint
- architectural composite and area floor plans, and reflected ceiling plans
- electrical lighting, thermostat, power and communication drawings

*(4) Pencil or Computer Sketch Rendering (3 views).

3.7.1.4 100 Percent Design Distribution

See paragraphs above explaining Submittal Abbreviation Codes and Activity Distribution Addresses. The number of copies required for each submittal item are listed below.

Activity Submittal Item	CENWO-PM-M	CENWO-CD-Q	CENWO-CD-RM	HQ, AFSPC/CEC	50 CES/CECC
DANar-	10	2	4	1	8
DACalcs-	6	2	2	1	4
Specs-*(1)	10	2	4	1	8
Dwg-1/2-	10	2	4	1	8
MMin-*(2)	10	2	4	1	8
EMDwg-*(3)	1	-	-	-	-
DCLet-	10	2	4	1	8
ColBd-*(4)	1	-	-	1	1
Rend-*(5)	1	-	-	1	1
EP Plan	1	-	1	-	1

Activity Submittal Item	310 SG/XP
DANar-	2
DACalcs-	1
Specs-*(1)	2
Dwg-1/2-	2
MMin-*(2)	2
EMDwg-	-
DCLet-	1
ColBd-*(4)	1
EP Plan	1
Rend-*(5)	1

*100 PERCENT SUBMITTAL NOTES:

Specific Submittal requirements are addressed in Section 01332 and 01338.

*(1) Copy shall show deletions and insertions (Revisions On) for all UFGS and designated CEGS specifications submitted. Process and Print Options for each section furnished shall include the following minimum requirements: Under "Sections" Reconcile References, Print/Process Sections and Renumber Paragraphs boxes are checked; Under "Reports" a Section Table of Contents (Include Without Scope and Combine sections and section tables of contents), and Reference Verification, Submittal Verification, Reference Verification, Submittal Verification, Bracket Verification, Section Verification and Submittal Register boxes are checked; Under "Options" Section Dates shown, Units of Measure as english, Tags are Hidden, Notes are hidden, Revisions are shown, Start Page Numbering with "1", and Restart for each section box is checked; and Under "Header/Footer" jobtitle and jobname as a Header and Section number and Page number as a footer (similar to format shown on this section of the RFP).
*(2) To be submitted after Review Conference per requirements of this section.
*(3) Electronic Media Drawings:

Fifteen (15) percent of all drawings (exludes Cover Sheet, Vicinity Map, Location Plan and Indexes), representative of all design disciplines, shall be submitted in AutoCAD 2002 on CD-ROM to verify that the CADD standards being specified are complied with.

Provide a CD-ROM, 100MB ZIP disk or 3.5" floppy of the following drawings:

- interior design furniture footprint
- architectural composite and area floor plans, and reflected ceiling plans
- electrical lighting, thermostat, power and communication drawings

*(4) Color boards shall show actual color samples of all proposed exterior and interior finishes.

*(5) Color Copy of Rendering.

3.7.1.5 100 Percent Corrected Design Distribution

See paragraphs above explaining Submittal Abbreviation Codes and Activity Distribution Addresses. The number of copies required for each submittal item are listed below.

Activity Submittal Item	CENWO-PM-M	CENWO-CD-Q	CENWO-CD-RM	HQ, AFSPC/CEC	50 CES/CECC
DANar-	10	2	4	1	8
DACalcs-	6	2	2	1	4
Specs-*(1)	10	2	4	1	8
Dwg-1/2-	10	2	4	1	8
MMin-	10	2	4	1	8
EMDwg-*(2)	1	-	-	-	-
DCLet-	10	2	4	1	8
ColBd-*(3)	1	-	-	1	1
Rend-*(4)	-	-	-	2	3
EP Plan	1	-	1	-	1

Activity Submittal Item	310 SG/XP
DANar-	2
DACalcs-	1
Specs-*(1)	2
Dwg-1/2-	2
MMin-	2
EMDwg-*(2)	-
DCLet-	1
ColBd-*(3)	1
Rend-*(4)	2
EP Plan	1

*100 PERCENT CORRECTED SUBMITTAL NOTES:

Specific Submittal requirements are addressed in Section 01332 and 01338.

*(1) Copy shall show revisions executed (deletions removed and insertions markings removed) for all specification sections submitted. Process and Print Options for each section furnished shall include the following minimum requirements: Under "Sections" Reconcile References and Addresses, Print/Process Sections and Renumber Paragraphs boxes are checked; Under

"Reports" a Section Table of Contents (Include Without Scope and Combine sections and section tables of contents), and Reference Verification, Submittal Verification, Reference Verification, Submittal Verification, Bracket Verification, Section Verification and Submittal Register boxes are checked; Under "Options" Section Dates shown, Units of Measure as english, Tags are Hidden, Notes are hidden, Revisions are hidden, Start Page Numbering with "1", and Restart for each section box is checked; and Under "Header/Footer" jobtitle and jobname as a Header and Section number and Page number as a footer (similar to format shown on this section of the RFP).

*(2) Electronic Media Drawings (AutoCAD 2002) on CD-ROM shall be submitted to verify that the CADD standards being specified are complied with. Resubmittal is not required for interior design submittal, if there are no changes required to the previous submittal. If major changes are required, provide a CD-ROM, 100MB ZIP disk or 3.5" floppy of the following drawings:

- interior design furniture footprint
- architectural composite and area floor plans, and reflected ceiling plans
- electrical lighting, thermostat, power and communication drawings

*(3) Color Boards are not required if there are no changes from the previous design submittal and if only minor changes are required, submit applicable coded samples (with tape ready for application) and corrected color legend. If major changes to the color board are required, resubmit the Color boards with actual color samples of all proposed exterior and interior finishes and revised corrected color legend.

*(4) Framed and matted Renderings.

3.7.1.6 Construction Set Distribution

See paragraphs above explaining Submittal Abbreviation Codes and Activity Distribution Addresses. The number of copies required for each submittal item are listed below.

Activity Submittal Item	CENWO-PM-M	CENWO-CD-Q	CENWO-CD-RM	HQ, AFSPC/CEC	50 CES/CECC
DANar-	8	2	6	1	8
DACalcs-	6	2	2	1	8
Specs-*(1)	8	2	6	1	8
SpecER-	1	1	-	-	-
SubReg-	2	2	2	-	-
Dwg-1/2-	8	2	6	1	8
Dwg-full-	-	-	1*(2)	-	1*(2)
EMDwg-*(3)	4	-	-	-	-
EMSpecs-*(3)	4	-	-	-	-
EMDA-*(3)	4	-	-	-	-
DCLet-	8	2	2	1	8
ECI-	8	2*(4)	4*(4)	1	8
Colbd-*5	-	-	1	-	-
Brvw Cmnts	8	2	4	1	8

Activity Submittal Item	310 SG/XP
DANar-	2
DACalcs-	1
Specs-*(1)	2
SpecER-	-
SubReg-	-
Dwg-1/2-	2
Dwg-full-	1*(2)
EMDwg	-
EMSpecs	-
EMDA	-
DCLet-	1
ECI-	1
Colbd-*5	1
Brvw Cmnts	1

*CONSTRUCTION SET SUBMITTAL NOTES:

Specific Submittal requirements are addressed in Section 01332 and 01338.

*(1) Copy shall shall be the same as the 100 pecent Corrected submittal and incorporate any additional comments made to 100 percent corrected design submittal.
*(2) Each drawing sheet shall be stamped (P.E.) by the appropriate Designer.
*(3) Electronic Media Drawings (AutoCAD 2002), Electronic Media Specifications (Specsintact), and Electronic Media Design Analysis (MS Word (compatible with MS Word 2000) and Adobe Acrobat 5.0. The Design Analysis Calculations shall be included with the design analysis narrative and shall be scanned and saved in Adobe Acrobat 5.0. The design analysis and calculations shall utilize bookmarks for each chapter of the design analysis and each appendix or calculations.
Electronic Media shall be on CD-ROM (Recordable compact disk with minimum 650 megabyte capacity)
*(4) In addition, the Contractor shall e-mail the designated offices a copy of the ECI per requirements stated in this section.

*(5) Reflects all changes made through accepted 100 Percent Corrected Design.

3.7.1.7 As-Built Submittals

See paragraphs above explaining Submittal Abbreviation Codes and Activity Distribution Addresses. The number of copies required for each submittal item are listed below.

Activity	CENWO-PM-M	CENWO-CD-Q	CENWO-CD-RM	HQ, AFSPC/CEC	50 CES/CECC
Submittal Item					
Asblt-	*	-	-	-	-
DD1354-	1	1	1	1	1

Activity	310 SG/XP
Submittal Item	
Asblt-	*
DD1354-	1

*NOTES for As-Built Submittals:

*See Section 01040, AS-BUILT DRAWINGS for requirements.

3.7.1.8 Design Submittal Alternative

The design-build Contractor may submit an electronic copy of the design analysis, design analysis calculations and appendices, specifications, specification error reports, submittal register, design certification letter with deviations, and engineering considerations and instructions on CD-ROM in an Adobe Acrobat 5.0 .pdf format and maximum of 1 hard copy per office per submittal listed above (CD's are substituted for hard copy numbers). If this alternative is selected, each of these documents shall utilize bookmarks with titles, which ease the review of the design. Each design submittal item and submittal item components shall be made easy to find (i.e. each specification section, chapters and appendices of design analysis, and each submittal item). This alternative will only be allowed if the design-build Contractor presents a legible and easy to review design. Failure to meet this requirement on one design submittal will result in requiring all future submittals and resubmittals to be hard copy as required above, at no additional cost to the Government.

3.7.2 Review Comments:

For each design review submittal, the Contractor will be furnished comments from Omaha District and other agencies involved in the review process approximately 21 days after receipt, unless indicated otherwise. Review conference for the 60 Percent and 100 Percent Design submittals will be held approximately 30 days after receipt. If the Contractor disagrees technically with any comment or comments and does not intend to comply with the comment, he/she shall clearly outline, with justification reasons for noncompliance at the design review conference in order that the comments can be resolved. Annotated comments, including the disposition of all comments shall be furnished in writing by the Contractor within [five (5) days] of the review conference and shall be recorded in the Contractor prepared Meeting Minutes described in paragraph 3.7.6.1. The written documentation shall be forwarded in the same quantities to the distribution list shown in paragraph: "Distribution of Design Documents for Conformance Review" above.

The Government will review the 100% Backcheck Review Documents for a period of fourteen (14) days after receipt of the documents. After this review, a formal letter will be sent to the Contractor allowing him to commence

construction or rejecting the submittal.

Any backcheck review comments made by the indicated Government agencies to the 100 percenct Corrected Design Submittals shall be resolved prior to distribution of Construction Set documents. The Contractor shall furnish copies of Annotated backcheck review comments indicating disposition of all comments with the Construction document set.

3.7.3 Using Automated Review Management System:

Conference and post conference action: Government personnel, from the above Government Agencies, will present review comments for discussion and resolution. Copies of comments, annotated with comment action agreed on, will be made available to all parties before the conference adjourns. Unresolved problems will be resolved by immediate follow-on action at the end of conferences. Valid comments will be incorporated. After receipt of final corrected design documents upon incorporation of all backcheck comments (as many backchecks as are deemed necessary by the Government will be conducted), the Omaha District will recommend acceptance to proceed with construction. The Government, however, reserves the right to not accept design document submittals and withhold design payments, if comments are of too great a significance. In this case, every effort shall be made during follow-up action between the Contractor and the Omaha District to resolve conflicts and problems such that documents can be fully accepted. However, if final submittal(s) are incomplete or deficient, requiring correction by the Contractor and resubmittal for review, the cost of rehandling and reviewing will be deducted from payment due the Contractor at the rate of $1500.00(for each design discipline requiring resubmittal) per submittal. "Design Disciplines" in this paragraph consist of Architectural, Structural, Interior Design, Mechanical, Electrical, Civil/Site work, and Fire Protection.

3.7.4 Delays

Delays caused by the Contractor in completion of the 60 percent design, the 100 percent design or the 100 percent corrected design will not be considered as valid reason to delay completion of the entire design. The Government may not be held liable for delays caused by re-submittal efforts caused by designs submitted, which are rejected by the reviewers.

3.7.5 Reproduction (For Construction):

Upon the Government's completion of the review of the 100% Corrected Design submittal, the Contractor shall reproduce copies of the design documents (accepted for the purposes of beginning construction), subject to the incorporation of the Corrected 100% design review comments. The Cover Sheet of the Contractor prepared drawings shall bear the stamp or seal and signature of the registered architect or appropriate engineer responsible for the work and proposed to meet the RFP requirements. The date on each drawing shall reflect the month and year that the drawings were cleared for the purposes of beginning construction. The Cover Sheet of the drawings, Cover Sheet of the Specifications, and Cover Sheet of the Design Analysis shall include the date that the design documents were cleared for the purposes of beginning construction. The Contractor shall provide corrected 100 percent specifications in both hard copy and electronic media (Specsintact Software Version as noted above or later). Distribution shall be as indicated above. The originals will be retained by the Contractor for recording of as-built conditions. Upon completion of the project, the accepted design documents corrected to reflect as-built conditions shall be

supplied to the Government. See Section 01040 AS-BUILT DRAWINGS for as-built drawing requirements.

3.7.6 Government Design Review and Acceptance

3.7.6.1 Design Review Conference and Post-Design Review Conference Action:

All design review conferences shall be held on Schriever AFB. Government personnel will forward review comments to the Contractor for discussion and resolution prior to the design review conference. Copies of comments, annotated with comment action agreed on, will be made available to all parties before the design review conference adjourns. Unresolved problems will be resolved by immediate follow-on action at end of conferences. Valid comments will be incorporated. Upon satisfactory Government review of the 100 percent corrected design documents, the Omaha District will formally provide Government acceptance necessary to initiate construction. The Government, however, reserves the right to not accept design document submittals and to withhold design payments, if comments are of too great a significance. In this case, every effort shall be made during follow-up action between the Contractor and the Omaha District to resolve conflicts and problems such that documents can be fully accepted. However, if final submittal(s) are incomplete or deficient, requiring correction by the Contractor and resubmittal for review, the cost of rehandling and reviewing will be deducted from payment due the Contractor at the rate of $1500.00 (for each design discipline requiring resubmittal) per submittal. The Contractor shall submit to the Contracting Officer within five (5) calendar days, two two (2) copies of meeting minutes summarizing major decision points and issues which requires resolution and the action office. Annotated comments shall be attached to these minutes.

3.7.6.2 Complete Design Documents

The Contractor shall submit complete design documents in the same quantity and to the same offices listed above in paragraph "**Distribution of Design Documents for Conformance Review"**, for each corrected 100 percent design submittal (one or more) until the Government is satisfied that all review comments have been addressed and resolved.

3.7.6.3 Accuracy and Completeness of Design

Reviews by the Government of the design documents shall not be construed to be an endorsement of the accuracy or completeness of the design. Design deficiencies or omissions in the accepted design shall be the responsibility of the Contractor.

3.7.6.4 Responses to Review Comments

In responding to review comments presented by the Government, the Contractor's designer shall state how and where comments were addressed. In addition, all comments shall be annotated and complete prior to the review conferences.

3.7.7 DD Form 1354, Transfer and Acceptance of Military Real Property

The Contractor shall provide, for acceptance, a completed DD Form 1354 "Transfer and Acceptance of Military Real Property" (Copy attached at the end of this section) with the 100 percent corrected design documents. DD Form 1354 shall be filled out in accordance with attached Instructions for Preparation of DD Form 1354 and Army Pamphlet 415-28 "Guide to Army Real

Property Codes" (Copy dated 02/11/2000 is available at the following website: http://www.usapa.army.mil/usapa_home.asp (Under "Search Publications" for "415-28" or or on solicitation CD-ROM in an Adobe Acrobat .pdf format under UFGS specification folder labeled "GUIDES", file name "p415_28.pdf".) The number of copies of the completed DD Form 1354 is noted above.

3.8 REVISIONS TO THE ACCEPTED DESIGN

(a) The accepted design will be used by all parties involved in construction and in administration of the contract. Therefore, it is imperative that the design documents be kept up to date and an effective system of making and distributing changes be implemented. Since changes to the design increase risk of construction errors and deplete available administrative resources, every effort shall be made to minimize revisions to the accepted design. One of the measures of the Contractor's effectiveness of management will be how well the goal of minimizing changes to the accepted design is met. The use of effective quality control during design, and utilization of experienced and capable designers are some of the means that are expected to be used to accomplish this goal.

(b) If revisions to the accepted design become necessary, the procedures described in Section 01330 SUBMITTAL PROCEDURES will be used to accomplish the revisions. The revisions will be considered a "Variation" and shall be submitted as a "G-AO" submittal. All the requirements in paragraph: "Variations" in Section 01330 SUBMITTAL PROCEDURES will apply to revisions to the accepted design. All design analysis and calculations necessary to establish that the proposed revision satisfies applicable design requirements shall be included in the submittal.

Attachment A

[Contractor's Letterhead]

[Date: _____]
[Contract No. _____]

[Reviewing Component Address]

Subj: DESIGN CERTIFICATION AND TRANSMITTAL FOR
[Project Title _____]
[Project Location _____]
[Contract No. _____]

Gentlemen

Enclosed are the following documents, which I hereby certify are in compliance with the RFP requirements of the subject construction contract and can be used to commence construction subject to Government approval:

1. Design Drawings

2. Project Specification

3. Design Analysis

   a. Civil
   b. Water Supply and Wastewater Collection
   c. Architectural
   d. Interior Design
   e. Structural
   f. Mechanical
   g. Fire Protection
   h. Electrical
   i. Environmental Protection, Compliance and Permits
   j. Reserved
   k. Sustainable Design

4. Submittals Register

5. All other Design Deliverables

6. Deviations (List of Deviations with Justification Attached)

[Typed Name and Signature of an
Officer of the Contractor's Company]

Copy to:
[As standard with the Contractor]

-- End of Section --

TRANSFER AND ACCEPTANCE OF MILITARY REAL PROPERTY

Form Approved
OMB No. 0704-0188

PAGE OF PAGES

Public reporting burden for this collection of information is estimated to average 30 minutes per response, including the time for reviewing instructions, searching existing data sources, gathering and maintaining the data needed, and completing and reviewing the collection of information. Send comments regarding this burden estimate or any other aspect of this collection of information, including suggestions for reducing this burden, to Washington Headquarters Services, Directorate for Information Operations and Reports, 1215 Jefferson Davis Highway, Suite 1204, Arlington, Va 22202-4302, and to the Office of Management and Budget, Paperwork Reduction Project (0704-0188), Washington, DC 20503.

1. **FROM** *(Installation/Activity/Serviceand Zip code)*	2. OPERATING UNIT	3. DISTRICT CODE	4. OPERATING AGENCY	5. DATE	6. JOB NUMBER	7. SERIAL NUMBER	8. CONTRACT NUMBER

9. **TO** *(Installation/Activity/Serviceand Zip code)*	10. OPERATING UNIT	11. DISTRICT CODE	12. OPERATING AGENCY	13. ACCOUNTING NUMBER	14. ACCOUNTABLE OFFICE NUMBER	15. TYPE OF TRANSACTION		16. PROJECT NUMBER
						A. ☐ NEW CONSTR. ☐ EXISTING FAC. ☐ CAPITAL IMP. ☐ OTHER *(Specify)*	B. ☐ BENF/O ☐ PHYSICAL COM. ☐ FINAN. COM. ☐ OTHER *(Specify)*	

ITEM NO. 17	CATEGORY CODE 18	FACILITY *(Category description)* 19	NO. OF UNITS 20	TYPE 21	UNIT OF MEAS. 22	TOTAL QUANTITY 23	COST 24	DRAWING NUMBERS 25	REMARKS 26

27. STATEMENT OF COMPLETION: The facilities listed hereon are in accordance with maps, drawings, and specifications and change orders approved by the authorized representative of the using agency except for the deficiencies listed on the reverse side.

TRANSFERRED BY *(Signature)* — DATE

TITLE *(Area Engr./Base Engr./DPWO)*

28. ACCEPTED BY *(Signature)* — DATE

TITLE *(Post Engr./Base Civ. Engr./Navy Rep.)*

29. PROPERTY VOUCHER NUMBER

30. CONSTRUCTION DEFICIENCIES

31. REMARKS

INSTRUCTIONS

This form has been designed and issued for use in connection with the transfer of military real property between the military departments and to or from other government agencies. It supersedes ENG Forms 290 and 290B (formerly used by the Army and Air Force) and NAVDOCKS Form 2317 (formerly used by the Navy).

Existing instructions issued by the military departments relative to the preparation of the three superseded forms are applicable to this form to the extent that the various items and columns on the superseded forms have been retained. Additional instructions, as appropriate, will be promulgated by the military departments in connection with any new items appearing hereon.

With the issuance of this DD form, it is not intended that the departments shall revise and reprint manuals and directives simply to show the number of this DD form. Such action can be accomplished through the normal course of revision for other reasons.

INSTRUCTIONS FOR PREPARATION OF DD FORM 1354

Purpose. This table provides the procedures for completing DD Form 1354 (Transfer and Acceptance of Military Real Property) by all responsible parties.

Detailed Instructions. Only the shaded blocks to the DD Form 1354 are required to be filled in by the Contractor as follows:

1. From: This block will include the name of the transferring agency: organization, installation, division, etc. It will also include the address and zip code. This information is for those performing the work or making the transfer.

2. Operating Unit: For other than Army use.

3. District Code: For other than Army use.

4. Operating Agency: For other than Army use.

5. Date: This is the preparation date of the DD Form 1354.

6. Job Number: The job number depends on who initiates the job. If the Director of Engineering and Housing (DEH) or the Director of Public Works (DPW) initiates the job then they will put a job number in this block and it will relate to a special project (for contract) or a DA 4283 job order (in house).

7. Serial Number: This is the voucher number at source,
e.g., DPW, COE**.**

8. Contract Number: If a project has been let to a contractor then the contract number will be that assigned by the contracting office in the Director of Contracting or the District Engineer contracting office.

9. To: This will include the name of the receiving organization, installation, division, etc. where the work has been performed or where the transfer has been made. The address and zip code will also be included.

10. Operating Unit: Other than Army Use.

11. District Code: Other than Army use.

12. Operating Agency: Other than Army Use.

13. Accounting Number: Other than Army Use.

14. Accountable Officer Number: Other than Army Use.

15. Type of Transaction: This will identify whether it is new construction, capital improvement or other. It will also indicate whether it is the final cost of the project, beneficial occupancy or physical completion The District Engineer or in house project officer must indicate on the DD Form 1354 whether cost shown is preliminary (for Beneficial Occupancy/Physical Completion DD Forms 1354) or final cost.

If it is a preliminary (estimated cost) the real property officer will create a suspense file to ensure that the district furnishes an updated DD Form 1354 with final construction cost. Update to the database should be handled accordingly. Final costs may take several years if legal claims are involved.

Indicate whether the transaction involves new construction, transfer of existing facilities or capital improvements to existing facilities.

16. Project Number: Enter the project number and code number assigned to identify the project. For construction, enter the public law authorizing the work.

17. Item Number: Identify each entry on the DD Form 1354 by giving it an item number. Each portion of a facility with a unique DA PAM 41528 category code must be identified with a separate line number.

18. Category Code: This column will identify the five-digit design use category code associated with the design of the facility as indicated in the DA PAM 41528. Each facility may have more than one design use; however, they must be identified as separate items in block 17.

19. Facility (Category Description): The description for the facility will be entered as it relates to the category short title in the DA PAM 41528. Each facility number should be identified in this field as it relates to the construction.

20. Number of Units: Self-explanatory.

21. Type: This will indicate the type of construction: "P"
= Permanent, "T" = Temporary and "S" = Semi permanent.

22. Unit of Measure UM1, UM2: This indicates the gross area or capacity of a facility as it relates to the design use category code of the facility. See DA PAM 41528.

23. Total Quantity: This indicates the total quantity of the facility as it relates to the unit of measure assigned to the facility: e.g., UM1 = square feet (SF), acres (AC) or square yards (SY), UM2 = each (EA), families (FA), etc.

24. Cost: Cost for each line item entry must be entered.
All engineering, design and inspection costs associated with a project must also be captured on the DD Form 1354.

a. If the cost is the final cost figure for the line item it will carry an alphabetical suffix of "F" indicating that it is a final cost. If the cost is preliminary it will contain a "P" indicating it to be a preliminary cost and not final.
b. If the cost is a capital improvement to an existing facility previously accounted for, enter only the amount which will increase the cost of the real property, i.e., enter the amount by which the general ledger balance is to be increased.
c. All engineering, design and inspection costs will be entered on the DD Form 1354 for the real property office to capitalize as project costs. These will be identified as a separate entry.

Types of funds are mandatory and will be shown in column 24 or column 26 (i.e.: MCA, Housing, and NAF).

25. Drawing Number: Indicates the number assigned to a particular drawing of a construction project as it relates to the different components to a facility: the architectural drawing would be number one, the

plumbing would be number two, etc. Using the old manual system the drawing numbers would relate to each page of the project, however, now that the automated system of CADD is operational at many installations this is not the case.

26. Remarks: Self-evident. This field may be used to note any information about the drawing numbers, project number, reason for the DD Form 1354: change in unit of measure, reason for increase/decrease in cost, etc.

27. Statement of Completion: Indicates the signature/title of the individual responsible for the transfer of the facility/equipment. The date is self-explanatory, however, the date must be prior to or the same as the date of acceptance in item 28 on the 1354.

28. Accepted By: Indicates the signature/title of the individual responsible for accepting the transfer of such properties. The date is self-explanatory.

29. Property Voucher Number: This number will be assigned sequentially by the receiving real property office to indicate the voucher occurrence that the transaction was accepted/vouchered.

Example: V12390, This indicates that this is the 123rd voucher for FY 90. When an installation transfers from one to another, the losing installation fills in block 7 and the gaining block 29.

30. Construction Deficiencies: This should indicate any deficiencies of the design or construction of the project.

31. Remarks: Self-explanatory. If the "Other" box is checked in item 15 an explanation should be noted in the "Remarks" column.

This page was intentionally left blank for duplex printing.

SECTION TABLE OF CONTENTS

DIVISION 01 - GENERAL REQUIREMENTS

SECTION 01336

60 PERCENT DESIGN REQUIREMENTS

PART 1 60 PERCENT DESIGN SUBMITTALS

1.1 SITE PLANNING
1.1.1 Drawings
1.1.1.1 Location Plan and Vicinity Map
1.1.1.2 Survey Plan
1.1.1.3 Removal Plan
1.1.1.4 Site Plan
1.1.1.5 Free Zone and Construction Limit Plan
1.1.1.6 Site Furnishing Details
1.1.1.7 Landscape Plan
1.1.1.8 Landscape Details
1.1.1.9 Sprinkler Irrigation Systems
1.1.2 Specifications
1.1.3 Design Analysis Narrative
1.1.3.1 Design References
1.1.3.2 Basis, Specific Goals, Objectives and Priorities For Site Design
1.2 CIVIL
1.2.1 Drawings
1.2.1.1 Grading and Drainage Plan
1.2.1.2 Grading Sections
1.2.1.3 Typical Pavement Sections
1.2.2 Specifications
1.2.3 Design Analysis Narrative
1.2.3.1 References
1.2.3.2 Grading
1.2.3.3 Pavements
1.2.3.4 Drainage
1.2.3.5 Basis, Specific Goals, Objectives and Priorities For Civil Design
1.2.4 Design Analysis Calculations
1.2.4.1 Storm Drainage System Calculations
1.3 GEOTECHNICAL
1.4 WATER SUPPLY AND WASTEWATER
1.4.1 Drawings
1.4.1.1 Water Distribution and Sewage Collection Systems Plan (including building services)
1.4.2 Specifications
1.4.3 Design Analysis Narrative
1.4.3.1 References
1.4.3.2 Water Supply and Distribution Systems
1.4.3.3 Wastewater and Sewers
1.5 ARCHITECTURAL
1.5.1 Drawings
1.5.1.1 Floor Plans
1.5.1.2 Reflected Ceiling Plans
1.5.1.3 Roof Plan
1.5.1.4 Building Elevations
1.5.1.5 Building Sections

1.5.1.6 Wall Sections
1.5.1.7 Room Finish Schedules
1.5.1.8 Door, Window, and Louver Schedules
1.5.1.9 Fire Ratings
1.5.1.10 Drawing Scales
1.5.1.11 Legends
1.5.1.12 North Arrows
1.5.1.13 Modular Design
1.5.1.14 Symbols
1.5.1.15 Schedules
1.5.1.16 Notes
1.5.1.17 Dimensions
1.5.1.18 Facility Elevation
1.5.1.19 Access to Utilities
1.5.1.20 Reflected Ceiling Plans
1.5.1.21 Sketches
1.5.2 Technical Specifications
1.5.2.1 Use of Technical Guide Specifications
1.5.3 Design Analysis Narrative
1.5.3.1 Basic Criteria Statement
1.5.3.2 Description of Materials
1.5.3.3 Additional Criteria/Clarification
1.5.3.4 Reason for Selection
1.5.3.5 Site Adaptation of Standard Drawings
1.5.3.6 General Parameters
1.5.3.7 Functional and Technical Requirements
1.5.3.8 Design Objectives and Provisions
1.5.3.9 Coordination with Installation or Outside Agencies
1.5.3.10 Checklists
1.5.4 Design Analysis Calculations
1.6 INTERIORS
1.6.1 DESIGN ANALYSIS/NARRATIVE
1.6.2 DRAWINGS
1.6.2.1 FURNITURE FOOTPRINT
1.6.2.2
1.6.3 TECHNICAL SPECIFICATIONS
1.6.4 COLOR BOARDS AND LEGENDS
1.6.5 FURNITURE FOOTPRINT
1.7 STRUCTURAL
1.7.1 DRAWINGS
1.7.2 SPECIFICATIONS
1.7.3 DESIGN ANALYSIS NARRATIVE
1.7.3.1 Design Criteria and References
1.7.3.2 Design Loads and Conditions
1.7.3.3 Structural Materials
1.7.3.4 Availability of Precast Concrete Units
1.7.3.5 Description of the Structural System
1.7.4 DESIGN ANALYSIS CALCULATIONS
1.8 MECHANICAL
1.8.1 DESIGN DRAWINGS
1.8.1.1 Mechanical Index Sheet
1.8.1.2 Mechanical Abbreviation, Legend, and General Notes Sheet
1.8.1.3 Exterior Utility Drawings
1.8.1.4 Plumbing Drawings
1.8.1.5 Mechanical HVAC Drawings
1.8.1.6 HVAC Control Drawings
1.8.2 TECHNICAL SPECIFICATIONS
1.8.3 DESIGN ANALYSIS NARRATIVE
1.8.3.1 Index

1.8.3.2 Project Summary
1.8.3.3 Applicable Criteria
1.8.3.4 Technical Specifications
1.8.3.5 Design Conditions
1.8.3.6 System Descriptions
1.8.4 DESIGN ANALYSIS CALCULATIONS
1.8.4.1 Index
1.8.4.2 Design Conditions
1.8.4.3 Zone Air-Conditioning Loads
1.8.4.4 Block Air-Conditioning Loads
1.8.4.5 Chilled Water Pump Selections
1.8.4.6 Heating Loads
1.8.4.7 Heating Load Summary
1.8.4.8 Boiler Selection
1.8.4.9 Hot Water Pump Selection
1.8.4.10 Combustion-Air Requirements
1.8.4.11 Unit Heater Selections
1.8.4.12 Mechanical Ventilation
1.8.4.13 Toilets/Janitor Room Ventilation
1.8.4.14 Air Handling Units
1.8.4.15 Domestic Water Demand
1.8.4.16 Domestic Hot Water Demand
1.8.4.17 Electrical Load Summary
1.8.5 ENERGY CONSERVATION
1.8.6 AIR POLLUTION CONTROL
1.9 ELECTRICAL
1.9.1 Drawings
1.9.1.1 Lighting Layout and List of Fixtures
1.9.1.2 Receptacle Layout
1.9.1.3 Power Equipment and Layout
1.9.1.4 Power One Line Diagram
1.9.1.5 Communications
1.9.1.6 Fire Detection
1.9.1.7 Miscellaneous Details of Special Equipment
1.9.2 Specifications
1.9.3 Design Analysis Narrative
1.9.4 Design Analysis Calculations
1.9.4.1 Service
1.9.4.2 Transformers
1.9.4.3 Feeders
1.9.4.4 Panelboards
1.9.4.5 Illumination Calculations
1.9.4.6 Short Circuit Evaluation
1.10 FIRE PROTECTION
1.10.1 DRAWINGS
1.10.2 DESIGN ANALYSIS
1.10.3 TECHNICAL GUIDE SPECIFICATIONS
1.11 ENVIRONMENTAL PROTECTION, COMPLIANCE, AND PERMITS
1.11.1 General Requirements
1.11.2 Design Analysis Chapter
1.11.3 Draft Environmental Protection Plan
1.11.4 Appendix to the Environmental Protection Plan

PART 2 NOT USED

PART 3 NOT USED

-- End of Section Table of Contents --

SECTION 01336

60 PERCENT DESIGN REQUIREMENTS

PART 1 60 PERCENT DESIGN SUBMITTALS

For general submittal requirements, See Section 01332 SUBMITTALS FOR DESIGN.

1.1 SITE PLANNING

1.1.1 Drawings

1.1.1.1 Location Plan and Vicinity Map

A vicinity map consists of a small scale drawing of the project location, similar to a road map. A Location Plan consists of a small scale drawing showing the Government property or reservation limit with the construction project site shown. The drawing shall show the facility approved Contractor Access and Haul Routes.

1.1.1.2 Survey Plan

The information depicting existing conditions used to generate site drawings shall be shown on this drawing. An engineering survey of the site will be presented to the Contractor selected as a result of this RFP process. Any additional survey information required by the Contractor for design above that shown in the prepared engineering survey shall be procured and paid for by the Contractor. The scale of the survey plan shall match that of the site plan.

1.1.1.3 Removal Plan

The removal plan will show the existing physical features and condition of the site before construction. This information should include the field survey to show all above and below ground utilities; buildings, drives, roads and parking areas, walks, and vegetation; and such facilities as retaining walls, underground storage tanks, foundations, etc. Each physical feature to be removed shall be as indicated on the standard legend sheet, a legend on the removal plan, and properly noted: to be removed, to remain, or to be relocated. No existing or proposed contours shall be shown on this plan. The scale of the removal plan shall match that of the site plan.

1.1.1.4 Site Plan

The site plan shall show all the site layout information necessary to field locate the building, service drives, walks, and all other appurtenances to be constructed on the project. All site related work to be constructed will be located by dimensions. The site plan will identify all site related items such as: curbs, pavements, walks, courtyards, bollards, trash enclosures, chiller units, electrical transformers locations, etc. in accordance with a standard legend sheet or with additional legends or notes. Site plans shall be at a scale of 1" = 30' or 1" = 40'. No existing or proposed contours shall be shown on this plan. The site plan, prior to adding the dimensions, should serve as the base sheet to the other plans, such as: survey plan, removal plan, utilities plan, grading and

drainage plan and landscape plan. The site plan shall show all existing physical features and utilities within and adjacent to the work site that will remain after the proposed construction has been completed. Whenever the site plan occupies more than one sheet of drawings, a key plan shall be included. Additional plans showing specific areas of the site in smaller scales can be included if more detail is necessary.

1.1.1.5 Free Zone and Construction Limit Plan

The free zone and construction limit plan shall show the free zone, the construction limits, storage areas, staging areas, etc. The scale shall be appropriate to the information provided. Any specific construction phasing and security concerns shall be included in these plans.

1.1.1.6 Site Furnishing Details

The Contractor shall provide designs and details as necessary for site furnishings and accessories.

1.1.1.7 Landscape Plan

A landscape plan is included in the drawing set to serve as a guide in preparing the final contract drawings. A detailed landscape plan showing trees, shrubs, ground covers, seeded and sodded areas, shall be prepared by the Contractor. The landscape plan shall be prepared by a fully qualified, experienced professional Landscape Architect. The Contractor shall specify types of plant materials that are locally grown, commercially available and acclimated to the project environment. The landscape plan shall include a plant materials schedule or listing. This schedule shall include botanical names, common names, key, size and the method of transplanting. The Landscape Plan shall also show all unsurfaced ground areas disturbed by construction within the project limits with these areas shown to be seeded, sodded, or mulched as required. The scale of the landscape plan shall match that of the site plan.

1.1.1.8 Landscape Details

The Contractor shall verify the methods of planting to meet the project site/installation requirements and provide the necessary landscape details to perform the contract design work. Details shall reflect local practices and conditions for installation. The Contractor shall provide designs and details as necessary for other required site furnishings and accessories.

1.1.1.9 Sprinkler Irrigation Systems

A list of applicable criteria and/or design standards shall be provided. This shall also include precipitation rates, allowable pipe material and preliminary calculations of total flow and pressure requirements. A narrative description of the system including special requirements and trickle systems shall be provided.

1.1.2 Specifications

Provide a listing by title and number of all Technical Specifications proposed for use in the final site design.

1.1.3 Design Analysis Narrative

Design analysis shall include the following:

1.1.3.1 Design References

Design references used in preparing the site design.

1.1.3.2 Basis, Specific Goals, Objectives and Priorities For Site Design

The design analysis should give the basis, specific goals, objectives and priorities for site design of the project. Identify, explain and document use of design criteria and how the design meets goals, objectives and priorities. Identify the preferred site development concept. Document pollution prevention measures and other environmental considerations made during design. The 60 percent design analysis must be approved and accepted before Final Design.

1.2 CIVIL

1.2.1 Drawings

1.2.1.1 Grading and Drainage Plan

A preliminary grading and drainage plan shall be provided at the same scale as the site plan. Tentative new and existing grading contours shall be indicated at 1 foot contour intervals. Indicate finished floor elevation of the new building. Plans shall show layout of the new and existing storm drainage systems. Uniform grades shall be labeled using slope arrows. Provide spot elevations at building corners, access drives, sidewalks, changes in grade, etc. Provide location and description of benchmarks and indicate vertical and horizontal datums.

1.2.1.2 Grading Sections

Provide grading sections through the site showing finished and existing grades, pavement sections in detail, slope percentage, ditches, etc.

1.2.1.3 Typical Pavement Sections

Provide typical pavement sections and details showing interface between new and existing pavements and new pavements of different sections.

1.2.2 Specifications

Provide a listing by title and number of all Technical Specifications proposed for use in the final Civil design.

1.2.3 Design Analysis Narrative

Design analysis shall include the following:

1.2.3.1 References

Design references used in preparing the civil design.

1.2.3.2 Grading

A narrative of the grading design and criteria used.

1.2.3.3 Pavements

A narrative of the pavement design and criteria used.

1.2.3.4 Drainage

A narrative of the drainage design and criteria used. Include information on the storm drain pipe materials selected and their ability to withstand earth dead loads and live loads that will be imposed.

1.2.3.5 Basis, Specific Goals, Objectives and Priorities For Civil Design

The design analysis should give the basis for the Civil design and should establish specific goals, objectives and priorities for Civil design of the project. Identify, explain and document use of design criteria and how the design meets goals, objectives and priorities. Identify the preferred site development concept. Document pollution prevention measures and other environmental considerations made during design. The 60 percent Design Analysis must be approved and accepted before Final Design.

1.2.4 Design Analysis Calculations

1.2.4.1 Storm Drainage System Calculations

Storm Drainage System Calculations shall include the following:

a. Drainage area map showing boundaries of each drainage area and respective drain inlet or culvert.

b. Storm run-off calculations for each drainage area.

c. Preliminary storm drain pipe sizing calculations.

1.3 GEOTECHNICAL

See Structural Design Requirements.

1.4 WATER SUPPLY AND WASTEWATER

1.4.1 Drawings

1.4.1.1 Water Distribution and Sewage Collection Systems Plan (including building services)

Provide all existing utilities and above ground features which may pose as an obstacle (i.e., water, sewer, gas, electrical, etc.) on the basic site plan layout. Exclude siting notes and dimensions from the plan. Provide all proposed new water and sewer lines with preliminary sizes. This shall include all new service lines up to the 5 feet building line. Show the proposed locations of all new manholes, fire hydrants, valves (including PIV's), connection points and etc.

1.4.2 Specifications

Specifications shall be coordinated with the plans and include all items. Provide a listing of specifications to be provided. Provide a complete copy of special sections to cover those subjects for which no UFGS guide specifications are used or available.

1.4.3 Design Analysis Narrative

Design analysis shall include the following:

1.4.3.1 References

Provide design references used in preparing the water and wastewater design.

1.4.3.2 Water Supply and Distribution Systems

A narrative of the water supply and distribution systems design and applicable criteria used shall be provided. Include calculations for the peak and average domestic demands, the fire flow required and the available flow and residual pressures. A description of the water distribution system, a listing of allowable piping materials, hydrant flow test data and preliminary calculations necessary to support equipment, piping sizes, fire and domestic demands, headloss, etc., shall be provided. Hydrant flow test data will include status information on the domestic and fire pumps.

1.4.3.3 Wastewater and Sewers

Based on existing information the sanitary sewer system in the vicinity of the proposed facility is assumed to be adequate to carry the flows expected to be generated by the new facility. A narrative of the wastewater supply design and applicable criteria used shall be provided. Include the preliminary calculations used to design the average and peak contributing flows. Field verify the available capacity and full flow capacity of the existing system to ensure that it will be adequate for the flows generated by the new facility. Include the available capacity and full flow capacity in the design analysis. Preliminary calculations necessary to support equipment and piping sizes and a listing of allowable piping materials shall be provided.

1.5 ARCHITECTURAL

1.5.1 Drawings

Sixty percent architectural drawing submittal shall be a complete set of architectural drawings without large scale details. All other drawings shall be complete except referencing of the large scale details.

1.5.1.1 Floor Plans

Provide a double line Composite Floor Plan of the entire building, drawn at the largest scale practicable to include the entire building on a single sheet. This building is of a size that will require the floor plans to be divided into multiple areas. See paragraph on Drawing Scales for plan scale requirements. Floor plans shall essentially be complete with the exception of large scale detail referencing. Floor plans shall be scaled double-line drawings showing the functional arrangement, pocheing, location of all openings and plumbing fixtures, all section cuts, wall types, all notes and leaders, all general notes, and all dimensions shall be completed. The plans shall indicate door swings, door numbers and window type; door and window schedules are required. A north arrow shall be shown on each floor plan. Enlarged toilet and stair plans shall also be included. The first composite plan sheet shall include a gross area tabulation comparing the actual square meters with the authorized square meters of the facility. Architect-Engineer suggestions for plan improvement shall be fully shown and justified. Include the following:

Overall, control, and door/ window opening dimensioning.

Match lines for combining individual portions of floor plans.
Room names and numbers.
Structural column or bay indicators.
Wall and building section cuts.
Door swings and door numbers.
Window types.
Area in square meters.
General notes.

Also provide a Key Plan at a uniform location on all Floor Plan sheets which shows the interrelationships between the building portions. This key plan will be scaled, and oriented in the same manner as the floor plan for all plan type drawings of all disciplines. When dimensioning, use arrowheads, not dots or slashes. Where major structural elements are included as parts of architectural detailing, do not indicate sizes. These elements should all be fully defined as part of the structural design documents. Major elements of mechanical and electrical equipment affecting room size or shape, shall be shown on the architectural plans to a practicable extent and coordinated with other respective disciplines. When applicable, Government-furnished, Contractor-installed, or Government-furnished and Government-installed items shall be shown as a dashed line.

1.5.1.2 Reflected Ceiling Plans

Reflected ceiling plans shall be complete including all electrical lights, mechanical supply & diffusers, notes, complete legends and pocheing of all materials to be used. See paragraph on Drawing Scales for reflected ceiling plan scale requirements.

1.5.1.3 Roof Plan

Composite and larger area roof plans shall be complete including all notes, legends, slope indications, gutter and downspout locations, and roof overflow drains. All elements located on the roof shall be coordinated with all disciplines. See paragraph on Drawing Scales for roof plan scale requirements.

1.5.1.4 Building Elevations

Provide all building elevations complete showing the appearance and architectural treatment. Elevations shall be dimensioned to show total height, and relation to grade. Critical elevations such as top of finish floor, top of steel, etc. shall be indicated. All notes for materials shall be included. See paragraph on Drawing Scales for Exterior Building Elevation scale requirements.

1.5.1.5 Building Sections

Building cross section and longitudinal sections shall be included to show general interior volumes, construction methods, and height of ceilings and partitions. Identify materials used and necessary dimensions. See paragraph on Drawing Scales for Building Section scale requirements.

1.5.1.6 Wall Sections

Drawings shall include all wall sections and stair section conditions including corridors, showing vertical control elevations and dimensions, with all materials labeled. The sections should normally be cut through doors, windows, and other critical wall section locations. Wall sections

shall not be broken. Additional details shall be included when necessary to illustrate important or unusual features. All horizontal dimensions shall occur on the plans and vertical dimensions on the sections and elevations. See paragraph on Drawing Scales for Wall Section scale requirements.

1.5.1.7 Room Finish Schedules

Room finish schedule shall be complete in accordance with Corps of Engineers (COE) standard format.

1.5.1.8 Door, Window, and Louver Schedules

Door schedule shall be complete in accordance with Corps of Engineers (COE) standard format. Schedule shall include door and frame types, except referencing to door details and hardware sets. Window and louver schedules shall be complete including window and louver types except referencing to details.

1.5.1.9 Fire Ratings

Wall ratings, and fire hazards shall be clearly indicated as required by Fire Protection criteria. Wall fire ratings shall be graphically shown by a continuous symbol or pocheing within the wall on a Fire Protection /Life Safety Plan. When other functions coexist with the fire protection functions, their integration shall be clearly indicated, with an analysis that describes how both functions will be served. Provide a separate, composite type floor plan which makes an accurate presentation of these various features and functions.

1.5.1.10 Drawing Scales

Architectural work shall be drawn at the scales listed below. Other scales may be used only by written authorization through the Project Manager, Omaha District. Units of measurements shown on the drawings shall be done in millimeters. All disciplines should use the same scale for plan sheets. The following is a comparison guide to establish equivalent scaling of drawings:

	ENGLISH
Composite Plans (Note 1)	Varies
Floor Plans	1/4-Inch = 1'-0"
Reflected Ceiling Plans	1/4-Inch = 1'-0"
Detail Plans (Note 2)	1/2-Inch = 1'-0"
Roof Plans	1/4-Inch = 1'-0"
Exterior Elevations	Same scale as plan
Interior Elevations	1/2-Inch = 1'-0"
Interior Toilet Elevations	1/2-Inch = 1'-0"
Building Cross Sections	1/4-Inch = 1'-0"
Wall Sections (Note 3)	3/4-Inch = 1'-0"
Stair Sections	3/4-Inch = 1'-0"
Details (Note 2)	3-Inches = 1'-0"
Wall Types	3/4-Inch = 1'-0"
Fire Protection Plans (Note 1)	Varies

Notes:

1. Scale of composite plan shall be as required so that the entire facility is drawn on one sheet without break lines.

2. The goal of this requirement is that the details be large enough to show all fixtures, accessories, equipment, materials, manner of construction, clearances required for proper maintenance, and complete dimensions. Toilet rooms and Equipment rooms are examples of the kind of spaces which shall be drawn as a Detail Plan.

1.5.1.11 Legends

Standard architectural material symbols used on the drawings shall be provided as a separate architectural legend drawing located just in front of the architectural drawings in the set. Additional material symbols should be added to the Legend Sheet as needed for the project.

1.5.1.12 North Arrows

North arrows shall be oriented the same direction on all plan sheets and by all disciplines; including site and civil drawings. Plan north shall be "up" or the left on the drawings. Indicate true north on composite plan drawings. North arrows shall be located approximately at the same location on all sheets.

1.5.1.13 Modular Design

Modular Design practices shall be followed in the design of all masonry buildings or components of buildings. Dimensions shall be figured to whole or half-unit lengths of standard units in order to reduce on-site cutting of masonry.

1.5.1.14 Symbols

The Room and Door Numbering system shall be consistent. The standard symbols for Amendments (a triangular box) or Modifications (a type of circular box, see the chapter on Drafting Criteria) to the contract shall not be used for any other purpose, and care must be taken to avoid using even similar appearing but technically different symbols. Room numbering shall start at the main entrance and proceed clockwise around functional areas.

1.5.1.15 Schedules

Schedules for room finish, doors, windows, louvers, etc., shall be clear and complete. As many columns as necessary should be provided in order to present the essential information. The "Remarks" column should not be used as a substitute for an information column. Normally a single item should be presented on each schedule line. Other scheduling methods as standard with the A-E may be used if approved by written authorization from the Project Architect, Omaha District.

1.5.1.16 Notes

Notes may be placed on drawings to reduce the amount of repetitive drafting, provided that clarity is not lost. General notes should be placed at the right-hand edge of the sheet and, if possible, should be located on the first sheet in the set. Notes that pertain to each drawing however, should be placed on each drawing.

1.5.1.17 Dimensions

Dimensions must be complete, accurate and fully coordinated. Dimensions should be to points easily measurable in the construction, and should be laid out to eliminate refiguring in the field. Dimensions should be tied-in to column lines, etc., to facilitate checking. Plan dimensions for frame construction should be to face of stud (or sheathing) for exterior walls, to one face of stud for interior partitions, and to centerline of openings. For masonry construction, dimensions should be to one or both nominal faces of masonry and to jambs of openings.

1.5.1.18 Facility Elevation

The level of finished floor shall be indicated as EL.= 100 000. Elevations for footings, etc., shall be related to this figure. Sea level elevations shall not be shown on the building drawings.

1.5.1.19 Access to Utilities

All utilities within the building, such as piping, ductwork, electrical work, etc., shall be concealed in finished areas. Provide plumbing chases in toilet areas. The clear space above ceilings and the size of chases must be carefully figured to accommodate piping slopes and connections, ductwork crossovers, and similar situations. Access must be provided to valves, cleanouts, etc. Space provided for utilities systems must be adequate but should not be excessive.

1.5.1.20 Reflected Ceiling Plans

Reflected Ceiling Plans shall be provided for all spaces in the building. Reflected ceiling plans shall show the ceiling tile layout and location of gypsum wallboard and other ceiling types where applicable. All light fixtures, air diffusers, grilles, registers, PA speakers, sprinkler head layout, smoke and heat detectors - if ceiling mounted, and other ceiling mounted items will also be shown on the reflected ceiling plans. The fixtures and other equipment shall be laid out in a regular pattern symmetrical with the ceiling tile grid, or symmetrical with the room centerlines, columns, windows, or other feature that dominates. All ceiling mounted items shown shall be fully coordinated with all other disciplines.

1.5.1.21 Sketches

All sketches presented during the design phase shall be reduced to 8-1/2" by 11" and included in this design analysis to document the design options and decisions evaluated during the design process.

1.5.2 Technical Specifications

1.5.2.1 Use of Technical Guide Specifications

a. Technical Guide Specifications are prepared by the Corps of Engineers to achieve the maximum uniformity in contract specifications. The technical guide specifications describe the type and quality of material and installation normally acceptable for Corps construction, and often represent specific agreement between the Corps and the applicable industry. The provisions of the technical guide specifications should not be changed without justification. The 60% submittal shall include a draft edited specifications of all the applicable sections. Items added or

deleted in these specification sections shall be evident. Complete descriptions including specific size, gauge, and configuration are included in the technical Guide Specifications for a wide variety of items. The designer must be familiar with the technical Guide Specification requirements in order to provide details fully coordinated with the technical specification descriptions. Terminology used on the drawings shall be the same as used in the Technical Guide Specifications. Where it is desirable to detail a variance with the standard provisions of the Technical Guide Specifications, the specifications must be revised to coordinate with the details. In addition to the guidance in SECTION 01332 on editing technical specifications, data and sample submittals for all interior and exterior finishes shall be "GA1" submittals.

b. New guide specifications shall be limited to those specialty type items not covered in the regular sections of Technical Guide Specifications.

1.5.3 Design Analysis Narrative

The Design Analysis shall be essentially complete with emphasis on the following:

1.5.3.1 Basic Criteria Statement

A statement indicating the basic criteria to be applied to the design including type of construction (noncombustible, etc.), category of construction (permanent, etc.), major fire protection and exit requirements, etc..

1.5.3.2 Description of Materials

A description of materials for all major building components and of all interior and exterior finishes ascertaining their matching of existing. The description of materials must include type of exterior wall construction, room finish schedule, window types, panel materials, etc. The description of materials should follow the continuity of the Military Handbook 1190. The description of finishes may be presented in schedule form.

1.5.3.3 Additional Criteria/Clarification

A list of items on which additional criteria, clarification, or guidance is required.

1.5.3.4 Reason for Selection

The written presentation must include the designer's reasons for selecting specific materials, architectural compatibility, and architectural treatment in all cases in which the reason for selection is not obvious.

1.5.3.5 Site Adaptation of Standard Drawings

Site adaptation of standard drawings shall include the following in the design analysis.

a. An outline of the selections made where the standards permit the designer a choice of design or material.

b. An outline of items on the standard that do not conform to current criteria or to the design instructions, and suggested methods for changing the standards.

c. An outline of errors found in the standards and suggested methods for correction.

d. An outline of improvements the designer feels should be made to the standards, with full explanation and justification.

1.5.3.6 General Parameters

The design analysis shall follow the format described herein.

a. The purposes, overall functions, and total capacities of the facility.

b. The design theme or visual appearance of the exterior and interiors of the building, and how this facility coordinates with the image criteria of the installation on which it will be constructed.

c. The number of personnel to use facility.

d. The type of activities and equipment involved.

e. The anticipated life of the functions to be accommodated.

f. The category of construction; permanent

1.5.3.7 Functional and Technical Requirements

a. Functional areas, occupant capacities, and allocation, including a functional relationship matrix.

b. All items of equipment, required.

c. Occupational safety and health.

d. Handicapped accessibility.

e. Energy conservation energy budget goals.

f. Sound and vibration control.

g. Interior service areas.

h. Physical security; lock and keying, intrusion-detection, alarms, restricted access areas, interior guard support, and ties to local authorities.

i. Justification for selection of exterior and interior finishes and materials.

j. Moisture Vapor Control.

k. Lessons learned incorporated into the design.

1.5.3.8 Design Objectives and Provisions

a. Adaptation of the building to the size, shape, and orientation of the site.

b. Building layout to establish convenient circulation flows during normal operation and emergency evacuation activities, for materials, equipment, services, and people.

c. Grouping spaces into sound-compatible zones and protective construction zones, e.g., for fire and storm.

d. Space layout compatible with modular (structural and environmental) support systems.

e. Type of construction materials, architectural systems, and finishes.

f. Building expandability/changeability.

g. Physical security.

h. Barrier-free design.

i. Energy conservation. (insulation, orientation)

j. Acoustical design.

k. Moisture vapor condensation design.

l. Composition of masses and spaces architectural compatibility and architectural details to reflect the design theme and desired image, and the scale and nature of the activities involved.

m. Perception of the building details and volumes. (Specific provisions made, e.g., an identifiable sequence of viewing positions for experiencing the interior and exterior architectural design.)

n. Enhancement of materials and systems maintenance and operation.

o. Economy of building construction, operation, and maintenance: life-cycle cost effectiveness.

1.5.3.9 Coordination with Installation or Outside Agencies

a. Physical security support.

b. Occupational safety and health, as required.

c. Government furnished equipment.

d. Operations and maintenance support.

1.5.3.10 Checklists

Fire Protection Code Analysis and Handicapped Checklist shall be included

in the Design Analysis. See attachments No. 1 and No. 2 at the end of this section.

1.5.4 Design Analysis Calculations

a. Net room areas, occupant capacity and gross building areas.

(Categorize areas and capacities under the titles of "Operational Space Requirements", "Administrative Space Requirements", "Storage Space Requirements", and "Support Space Requirements".)

b. U-values for each wall, window, door, or roof type studied or selected.

c. Acoustics.

d. Rainfall intensity relative to roof area and roof drain size and number calculations.

1.6 INTERIORS

1.6.1 DESIGN ANALYSIS/NARRATIVE

The design analysis shall contain an explanation of the desired image or visual appearance of the interior of the facility and the design intent.

1.6.2 DRAWINGS

1.6.2.1 FURNITURE FOOTPRINT

A furniture footprint indicating proposed furniture layout shall be incorporated into the drawings. Drawings shall be at 1:100 scale. Prewired workstation panel placement shall be shown and electrical, communications, and EDP outlet placement shall be clearly indicated. Typical workstations shall be coded (A typical, B typical, A similar, etc.).

1.6.2.2

1.6.3 TECHNICAL SPECIFICATIONS

Appropriate technicalspecifications shall be provided and coordinated with the drawings and design analysis. Specifications shall be edited to identify proposed product and installation requirements. Where materials or installation requirements are not covered in the provided specifications, information shall be prepared to cover these items. In addition to guidance provided in SECTION 01332 on editing technical specifications, data and sample submittals for all interior and exterior finishes (including but not limited to interior design and architectural specifications) shall be G-DO submittals.

1.6.4 COLOR BOARDS AND LEGENDS

Color boards shall show actual color samples of all proposed exterior and interior finishes. A color board legend shall accompany the boards and shall clearly identify all finishes. Clarification of finish placement shall be required when more than one color of a single finish is proposed.

Color boards shall be 8 1/2" x 11" in size and provided in a three ring binder. Include project name and location, design stage and date on the front cover and spine of the binder.

1.6.5 FURNITURE FOOTPRINT

A revised furniture footprint shall be provided. Also provide a CD or 100MB ZIP disk of the following revised drawings:

- interior design furniture footprint
- architectural composite, area floor plans and reflected ceiling plans
- electrical lighting, thermostat, power and communication drawing

Drawings shall be provided in AutoCadd 2000.

1.7 STRUCTURAL

1.7.1 DRAWINGS

Drawings shall include roof framing plans, floor slab plans and foundation plans. Roof framing plans shall show sufficient details to clearly indicate the type of framing system used, size and spacing of members and their elevations. The location of all columns or pilasters shall be shown, and all building structural members shall be at least outlined. The sizes, locations and elevations of footings shall be shown. Slab plans shall be coordinated with the Architectural sheets and shall indicate the locations of structural walls and masonry partitions, recessed slabs and contraction or construction joints. Concrete slab-on-grade thicknesses and sections shall be shown. Proposed treatment of unique or complex features and details shall be shown on the drawings. Elevation views, sections and details necessary to illustrate the design at a 60% level of completion shall be provided. Drawings shall also include overall building plan dimensions, north arrows, and design notes. Drawings shall be at done at a scale appropriate for the design, in no case however, shall plan type drawings be done at a scale smaller than 1/4"=1'-0" or detail type drawings at a scale smaller than 3/4"=1"-0".

1.7.2 SPECIFICATIONS

For this 60% design submittal the Contractor shall provide a listing by title and number of all Technical Specifications proposed for use in the final structural design.

1.7.3 DESIGN ANALYSIS NARRATIVE

Design analysis shall follow the format described in Section 01332 SUBMITTALS DURING DESIGN, Paragraph 3.3, "Design Analyses" and the specific content shall be essentially as outlined below.

1.7.3.1 Design Criteria and References

A list of design criteria references, such as Department of the Air Force Technical Manuals, ACI Standards, AISC Specifications, etc., and any other references which were used in the design of the project shall be included in the narrative.

1.7.3.2 Design Loads and Conditions

A list of structural design loads and conditions shall be provided, including:

- Snow load parameters;
- Wind load parameters
- Seismic design parameters;
- Roof live loads;
- Floor live loads, identifying each loading with usage and the room or space where used;
- Foundation design criteria, including the design depth for footings, allowable soil bearing pressure, equivalent fluid densities (or lateral earth pressure coefficients) for the design of earth retaining structures and building components, modulus of subgrade reaction, and any other pertinent data derived from the recommendations of the Final Foundation Analysis report (See Attachment #1 included as an appendix to this solicitation), a copy of which shall be included as an Appendix to the design analysis.

1.7.3.3 Structural Materials

A list of structural materials shall be provided, together with the stress grades and/or ASTM designations, as applicable, for structural steel, concrete, and reinforcing steel; the series for steel joists; and identification of the proposed use of each material in the structure.

1.7.3.4 Availability of Precast Concrete Units

Where precast concrete units of particular cross section(s) and concrete strength are a part of the structural design, verification of their availability from precast producers in the project vicinity shall be documented. Acceptable documentation consists of letters from the producers or a written statement by the Contractor identifying the name and address of the precaster(s), description of units and concrete strength(s) available, date when availability was verified, and name of Contractor's staff member who obtained the verification.

1.7.3.5 Description of the Structural System

A concise description of the proposed structural system for the building, together with the reasons for its selection, shall be provided. All principal elements of the structural system selected shall be described. Typically, these shall include:

- Primary supporting members for the roof;

- Masonry walls, type of material, and whether load bearing

or non-load bearing, with location of load-bearing walls defined, and

measures taken to compensate for expansion/contraction and crack

control in masonry walls;

- The proposed system for resisting lateral forces (wind and

earthquake) and transferring them to the ground, whether diaphragms,

chord bracing, shear walls, braced or moment resisting frame, etc;

- Foundations, description of special designs to accommodate existing

site conditions;

- Concrete slab-on-grade floors, description of floor surface finish treatment, accommodation of live loads, and the use, location and types of crack control joints;

- The proposed treatment of any unusual structural loadings, features or unique solutions to structural problems.

- Identification of any major vibrating elements and measures taken to isolate them.

1.7.4 DESIGN ANALYSIS CALCULATIONS

The extent of the structural calculations shall be indicative of a design which has reached a 60% level of completion. Computations shall include snow, wind, seismic, dead and live loads. Computations shall show sizing and spacing of structural members for roof framing, sidewalls and foundation sizes, as appropriate to the systems to be used for these elements.

1.8 MECHANICAL

Compliance with the design requirements for the building mechanical systems will be determined by a review of the submitted 60 percent drawings, design analysis, and specifications. Any conflicts in the design requirements or lack of thorough understanding of the nature and scope of work shall be identified and resolved prior to submittal of the 60 percent design.

1.8.1 DESIGN DRAWINGS

The 60 percent design drawings shall be fully coordinated with the design analysis. Sufficient plans, piping diagrams, sections, flow diagrams, details, schedules, and control diagrams/sequences shall be provided as necessary to define the required design intent. Floor plans shall use the architectural floor plans as a basis, with the building outline half-toned. Unless otherwise indicated, all floor plans shall be drawn at 1/8" = 1'-0" scale and show all room names and numbers. An exception to this are administrative areas being air-conditioned shall be 1/4" = 1'-0" scale and mechanical room plans shall be 1/2" = 1'-0" scale. Sheet reference number sequencing shall be in accordance with the Omaha District CADD Standards Manual. Submittal drawings shall include, but not limited to, the following:

1.8.1.1 Mechanical Index Sheet

An index sheet identifying all mechanical drawings shall be provided, including those drawings anticipated to be provided in the 100 percent design submittal. Index shall include drawing design file numbers, drawing numbers, sheet numbers, and drawing descriptions.

1.8.1.2 Mechanical Abbreviation, Legend, and General Notes Sheet

This sheet shall include all mechanical abbreviations and symbols that will be used on the drawings. Symbols shall be grouped into sections; as a minimum, provide sections for Plumbing, Heating, Miscellaneous Piping,

Valves and Fittings, and ventilation.

1.8.1.3 Exterior Utility Drawings

The following exterior utility drawings shall be provided:

a. Removal Plan

All existing exterior mechanical utilities and utilities which are to be removed shall be indicated on the Site Removal Plan located in the civil section of the drawing package.

b. Utility Plan:

All existing and new mechanical utilities shall be indicated on the Site Composite Utilities Plan located in the civil section of the drawing package. The location of existing exterior utilities shall be thoroughly checked and indicated on plans and profiles, thus preventing interference with new services. The utility drawing shall indicate all new utilities, including tie-in points, and existing utilities which are to be abandoned.

1.8.1.4 Plumbing Drawings

The following plumbing drawings shall be provided:

a. Plumbing Plans

Plumbing plans showing the design and tentative layout of the domestic hot and cold water distribution systems; make-up water piping; soil, waste and vent piping; and storm water drainage system shall be provided. Plans shall show all anticipated routing of piping systems from the connections within the structure to a point 5 feet outside the structure. The grade of all drain lines shall be calculated and invert elevations established. All electrical panels/equipment and pertinent HVAC equipment (expansion tanks, boilers, AHU's, pumps, lawn sprinkler system, etc.) shall be outlined in half-tone on the plumbing plans. Plans may combine building areas and be drawn at 1/8" = 1'-0" scale as long as legibility is not compromised. Plumbing fixtures and drains shown on the drawings shall be designated by the same identification system used in the Technical Specification and Plumbing Fixture Schedule.

b. Enlarged Mechanical Room Plumbing Plan

An enlarged mechanical room plumbing plan drawn at a minimum 1/4" = 1'-0" scale shall be provided. Plan shall show layout of all plumbing equipment and piping within the rooms. In addition to all the plumbing systems required, the plan shall show half-toned outlines of all HVAC equipment located in the room, gas service, lawn sprinkler apparatus, the fire protection entrance and risers, and the outline of any electrical panels or equipment located in the room.

c. Plumbing Detail and Schedule Sheet

The following details shall be provided: water heaters, and water service entrance. The provided plumbing fixture schedule and a contractor generated water heater schedule shall be provided.

1.8.1.5 Mechanical HVAC Drawings

Show on mechanical HVAC drawings, all items of mechanical equipment, including boiler room equipment, HVAC equipment layout, air handling units, air distribution and exhaust systems, etc., to determine proper space allocation within the intent of the architectural layout requirements. Plans, elevations, and sections shall be developed sufficiently to insure that major equipment items, piping, and ductwork cause no interference with structural members, electrical equipment, etc. The following HVAC drawings shall be provided:

a. Mechanical HVAC Plans

Mechanical HVAC plans showing the design and tentative layout of the hot water piping distribution system and equipment, the air supply and distribution systems, and the ventilation and exhaust systems shall be provided. Air supply and distribution systems shall show all ductwork, including supply and return ductwork, ductwork to diffusers, and all diffusers. For the 60 percent submittal, all ductwork may be shown as single-lined. The final design submittal shall show all ductwork as double-lined. All electrical panels/equipment and pertinent plumbing equipment shall be outlined in half-tone on the HVAC plans.

b. Enlarged Mechanical Room HVAC Plans

Enlarged mechanical room HVAC plans showing all mechanical systems and drawn at a minimum 1/2" = 1'-0" scale shall be provided. Plans shall show layout of all equipment, piping, and ducts located within the rooms. Equipment shall include (but not limited to) air handling units with associated outside air intakes, relief air, and supply/return ducts; exhaust/supply fans, mechanical room ventilation intake/relief openings, gas service entrance, combustion air opening, unit heaters, HW pumps, boilers, expansion tanks, and temperature control panels. Plans shall show dedicated access space for items requiring maintenance. In addition to all the mechanical HVAC systems required, the plan shall show half-toned outlines of all major plumbing equipment, the water service entrance, fire protection entrance and riser, lawn sprinkler apparatus, and any electrical equipment or panels located in the room.

c. Mechanical Room Sections:

For each air handling unit within the mechanical room, a mechanical room section view shall be provided showing, but not limited to, all AHU components, ductwork connections/routing, and relationship to adjacent structural features.

d. Chilled Water System Flow Diagram:

Provide flow diagram showing the facility piping system including the pumps and connected chilled water equipment. Each pump and equipment item shall show associated cfm flowrate. All thermometers, pressure gauges, isolation and control valves, bypass piping, freeze protection piping, etc. shall be shown on the flow diagram.

e. Mechanical Detail Sheets:

Installation details showing all specification requirements such as isolation and balancing valves, thermometers, pressure gauges, equipment pads, strainers, vents, hangers, vibration isolation, etc. shall be provided for each item of mechanical equipment. As a minimum, the following mechanical details shall be provided to the extent they are

included in the design:

Refrigerant Piping Diagram
Hot Water Boiler and Piping Diagram
Chilled water piping Diagram
Chilled water pumps
Hot Water Pumps
Expansion Tanks
Horizontal Unit Heater
Vertical Unit Heater
Chemical Shot Feeders
Gas Service Entrance
Radiant Floor Heating Piping Diagram
Radiant Floor Manifolds
Cabinet Unit Heater
Air Handling Units
Wall Propeller Supply/Exhaust Fan
In-line Supply/Exhaust Fan
Relief Hood
Relief Vent
Exhaust Hoods
Seismic Requirements for Floor-
Mounted and Suspended Equipment
Infra-red System

f. Mechanical Schedule Sheets

Schedules, with preliminary capacities, shall be provided for each item of mechanical equipment. Furnished typical equipment schedules shall be used whenever possible and shall be revised and completed as necessary to suit the project requirements. In addition to the furnished schedules, damper and control valve schedules shall also be provided.

1.8.1.6 HVAC Control Drawings

Simplified, one-line type control schematics showing all control system interface points and detailed sequence of operation shall be provided for all mechanical equipment and systems. Sequence of operation for each item of equipment and system shall be sub-sectioned into paragraphs describing discreet operational requirements. The following drawings shall be provided:

HVAC Controls Legend:

This sheet shall include all control abbreviations and symbols that will be used on the drawings. Furnished Controls Legend sheet shall be used as a basis for all abbreviations and symbols used on the Final Control Drawings.

a. Misc Systems

These sheets shall include all miscellaneous equipment items such as supply/exhaust fans, unit heaters, radiant floor, infra-red heaters, controls air compressor, etc. that are not interlocked to the main HW or air handling unit systems. Provide control schematic and sequence of control for each item of equipment on the same sheet.

b. Hot Water System

Provide a boiler and pumping system control schematic and sequence of

operation.

c. Radiant Floor Water System

Provide a manifold and zone pumping system control schematic and sequence of operation.

d. Air Conditioning System:

Provide a condensing unit, evaporator and chilled water pumping system control schematic and sequence of operation.

e. Air Handling Systems

For each air handling system, including outside air makeup system, provide a control schematic and a sequence of operation. Include all items of equipment that are interlocked to each system.

f. Control Points Lists

Provide Local Control Panel control points lists for all items of equipment and systems, identifying all anticipated temperature control system input/output points. The format for defining the input/output points shall be as identified on the furnished Example Control Point List sheets.

1.8.2 TECHNICAL SPECIFICATIONS

The following UFGS guide specifications shall be edited and coordinated with the drawings and design analysis to identify the proposed product and installation requirements for the facility:

02556A Gas Distribution System
13814A Building Preparation for Energy Monitoring and Control Systems (EMCS)
15070A Seismic Protection for Mechanical Equipment
15080A Thermal Insulation for Mechanical Systems
15181A Chilled and Condenser Water Piping and Accessories
15182A Refrigerant Piping
15190A Gas Piping Systems
15400A Plumbing, General Purpose
15565A Heating System: Gas-fired Heaters
15569A Water and Steam Heating; Oil, Gas or Both; up to 20 MBTUH
15620A Liquid Chillers
15895A Air-Supply, Distribution, Ventilation, and Exhaust System
15951A Direct Digital Control for HVAC
15990A Testing, Adjusting and Balancing of HVAC Systems
15995A Commissioning of HVAC Systems

Proposed HVAC and Temperature Control System Performance Test and Functional Performance Checklists shall be included in the appropriate specifications.

1.8.3 DESIGN ANALYSIS NARRATIVE

The narrative portion of the design analysis shall contain a narrative description and analysis for each of the mechanical portions of the design. The basis and reasons for specific engineering decisions, special features, unusual requirements, etc., shall be explained or summarized as applicable. If it is necessary to deviate from criteria or standard

practice, reasons shall also be included. Design statements shall be provided in sufficient detail to enable the reviewer to get a clear picture and understanding of all included work so that approval will be granted. Narrative shall be complete relative to scope and intended design approaches. The total scope projected to final design shall be outlined in a form that will be conveniently adapted, expanded, and detailed at the final design stage. If alternatives were to be evaluated and selected by the designer, findings (pros and cons) and conclusions shall be included. The design analysis shall carry a complete narrative for every item and system covered in the design, and shall include, but not be limited to, the following:

1.8.3.1 Index

Provide a design analysis index identifying all main and sub-paragraph headings.

1.8.3.2 Project Summary

Provide a brief description of the mechanical design objectives.

1.8.3.3 Applicable Criteria

A list of all applicable criteria used for basis of design.

1.8.3.4 Technical Specifications

A list of Technical Guide Specifications that will be used for the project.

1.8.3.5 Design Conditions

A list of Mechanical HVAC design conditions including elevation, latitude, heating/cooling degree days, winter and summer outside design temperatures, inside design temperatures for all spaces, ventilation rates, etc. shall be provided.

1.8.3.6 System Descriptions

Provide a complete description of all building systems; include the designer's reasons for selecting specific materials, systems, etc. in which the reason for selection is not obvious. System descriptions shall be include, but not limited to, the following:

Plumbing System
Exterior Gas Distribution System
Interior Gas Piping System
Hot Water Heating System
Radiant Floor System
Exhaust Hoods
Air Supply and Distribution Systems
Ventilation and Exhaust Systems
Temperature Control System
Seismic Protection
Chilled Water System
Refrigeration System
Infra-red system

1.8.4 DESIGN ANALYSIS CALCULATIONS

The Design Analysis calculations shall provide an estimate of the heating, cooling, and ventilation loads to determine a preliminary selection of the type and size of mechanical equipment to be used. Design calculations shall be provided in sufficient detail to enable the reviewer to get a clear understanding of all work to allow approval. Backup data shall be furnished to support basic design decisions related to sizing of major equipment and materials, performance of specific systems or equipment. Manufacturer's catalog data sheets shall be provided for each item of equipment selected. Calculations may be performed by manual or computerized procedures. Use of standardized charts, curves, tables, graphs will generally be acceptable for portions of required calculations lieu of specific calculation procedures. Such data must be from a recognized source which is identified in the design analysis and shall be included with the calculations. Design calculations and computations shall be provided for all systems and shall include, but not limited to, the following:

1.8.4.1 Index

Provide a design analysis index identifying all calculation items.

1.8.4.2 Design Conditions

A list of Mechanical HVAC design conditions including elevation, latitude, heating/cooling degree days, winter and summer outside design temperatures, inside design temperatures for all spaces, ventilation rates, etc. shall be provided.

1.8.4.3 Zone Air-Conditioning Loads

Preliminary cooling calculations shall be prepared using the Cooling Load Temperature Differential/Cooling Load Factors (CLTD/CLF) Method as described in the ASHRAE Handbook Fundamentals.

1.8.4.4 Block Air-Conditioning Loads

Preliminary block cooling load calculations, compassing the air-conditioned areas, shall be prepared using the CLTD/DLF Method and the furnished Air Force Air Conditioning Load Estimate Form AF-108.

1.8.4.5 Chilled Water Pump Selections

Include pump flow calculations and catalog selection data indicating dimensions, connection sizes, rpm, horsepower, and efficiency.

1.8.4.6 Heating Loads

For each area or room requiring heat; provide calculations.

1.8.4.7 Heating Load Summary

A tabular summary of all heating load calculations for each area or room, including combustion air heating, shall be provided.

1.8.4.8 Boiler Selection

Include boiler capacity adjustments for altitude, inefficiency, and net rating. Provide catalog data indicating input capacity, net output capacity, dimensions, and water and flue size connections.

1.8.4.9 Hot Water Pump Selection

Include pump flow calculations and catalog selection data indicating dimensions, connection sizes, rpm, horsepower, and efficiency.

1.8.4.10 Combustion-Air Requirements

Include combustion air quantity and free area calculations, louver selection, combustion air heating requirements, and selection of heating equipment.

1.8.4.11 Unit Heater Selections

For each area requiring a unit heater, provide data on capacity, weight, and horsepower.

1.8.4.12 Mechanical Ventilation

For each area or room requiring mechanical ventilation for cooling; provide calculations similar to zone air-conditioning, louver selection, and catalog fan data.

1.8.4.13 Toilets/Janitor Room Ventilation

Provide calculations, catalog fan data, and louver selections, for each toilet area.

1.8.4.14 Air Handling Units

A tabular summary of all airflow calculations for each area or room shall be provided on each air distribution system for fan sizing. summary

1.8.4.15 Domestic Water Demand

Calculations for determining the size of the domestic cold water supply line to the building shall be provided.

1.8.4.16 Domestic Hot Water Demand

The design guidance provided for service water heating in ASHRAE Handbook HVAC Systems and Applications shall be followed to determine the domestic hot water demand for the facility. Provide catalog data for the domestic water heaters.

1.8.4.17 Electrical Load Summary

A summary of all mechanical equipment and the associated electrical load requirements shall be provided.

1.8.5 ENERGY CONSERVATION

Mechanical designs shall be economical, maintainable and energy conservative with full consideration given to the functional requirements and planned life of the facility. Emphasis shall be given to heat reclamation, outside air usage and other energy conservation measures for mechanical systems. Each major item of proposed mechanical equipment shall have a net efficiency rating that is equal to or exceeds the net efficiency ratings of similar or equal equipment of the four manufacturers each having

one of the four highest ratings.

1.8.6 AIR POLLUTION CONTROL

Air pollution control shall be incorporated in all designs. The Architect-Engineer shall investigate the latest Using Service, Local, State, and Federal regulations and standards, analyze and report on requirements in the design analysis, and include in the design as applicable. The most stringent of all regulations and standards shall be implemented into the design. If in doubt as to requirements, contact this office for assistance.

1.9 ELECTRICAL

1.9.1 Drawings

Drawing scale shall match architectural drawing requirements. Drawings shall show the following:

1.9.1.1 Lighting Layout and List of Fixtures

Complete lighting layout of all areas shall be provided. The type of fixture shall be indicated on the drawing. Complete list of fixtures proposed with type of lamp and wattage.

1.9.1.2 Receptacle Layout

Complete receptacle layout should be provided for all areas to indicate project requirements.

1.9.1.3 Power Equipment and Layout

Power equipment and layout such as switchgear, panelboards, large motor driven items, etc.

1.9.1.4 Power One Line Diagram

Power one line diagram shall be shown to indicate arrangement of the system.

1.9.1.5 Communications

Communications (telephone, public address) shall be shown sufficiently to indicate the designers understanding of the Section 01007 ELECTRICAL REQUIREMENTS.

1.9.1.6 Fire Detection

Fire Detection drawings shall be provided and inserted in the Fire Protection/Fire Suppression F-Series of drawings.

1.9.1.7 Miscellaneous Details of Special Equipment

Miscellaneous details of special equipment to indicate understanding of 01007 ELECTRICAL REQUIREMENTS.

1.9.2 Specifications

Submit prescriptive specification sections to specify the quality, characteristics, installation procedures and testing requirements for all

items of the proposed electrical design.

Specifications shall be provided (to approximately 60 percent completion). See Section 01332 SUBMITTALS DURING DESIGN, paragraph 3.2, SPECIFICATIONS for additional requirements.

1.9.3 Design Analysis Narrative

The design analysis shall contain a description and analysis of the electrical portions of the design. Special features, unusual requirements, etc., should be noted. Narrative must address all technical requirements identified in Section 01007 ELECTRICAL REQUIREMENTS.

1.9.4 Design Analysis Calculations

Backup data shall be furnished to support basic design decisions related to sizing of major equipment and materials. As a minimum the following shall be submitted.

1.9.4.1 Service

Sizing of building services EMD (Estimated Maximum Demand) for all the building loads.

1.9.4.2 Transformers

Sizing of general purpose dry type transformers.

1.9.4.3 Feeders

Sizing of main feeders.

1.9.4.4 Panelboards

Sizing of panelboards and distribution equipment.

1.9.4.5 Illumination Calculations

Data should identify target and calculated illumination levels for all typical rooms. Calculations should be adjusted to compensate for special applications such as irregularly shaped rooms, open sides, ceiling obstructions (beams, ductwork), corridors, etc. If the lumen method is used for corridor calculations, the calculations should be performed using a module in which the length doesn't exceed 3 times the width (2:1 ratio preferred).

1.9.4.6 Short Circuit Evaluation

The maximum possible fault current at the building service should be calculated.

1.10 FIRE PROTECTION

1.10.1 DRAWINGS

Features of Fire Protection, their ratings, and the hazards requiring them, shall be clearly indicated. Sprinkler and fire alarm/detection areas shall also be clearly indicated. Fire detection and sprinkler systems shall be laid out and detailed sufficiently to indicate the designers understanding

of the Section 01008 FIRE PROTECTION REQUIREMENTS. When other functions co-exist with the fire protection functions, their integration shall be clearly indicated, with an analysis that describes how both functions will be served. Provide a separate, composite type floor plan which makes an accurate presentation of these various features and functions. As part of the submittal, provide a set of plans that shows emergency egress for the facility.

1.10.2 DESIGN ANALYSIS

The design analysis shall include a separate fire protection report containing, but not limited to, review statements and/or comments on the following items, where applicable.

a. Location and rating of fire walls and fire partitions.

b. Column, floor, and roof protection.

c. Path of travel for emergency egress and operation of panic exits.

d. Access to building for fire fighting.

e. Design and placement of fire and smoke stop doors.

f. Labeled windows, where required.

g. Venting of smoke.

h. Placement of hand fire extinguisher cabinets.

i. Type and adequacy of sprinkler system.

j. Building exterior fire protection facilities and building clearances.

k. Type of occupancy.

l. Zoning of fixed fire protection systems.

m. Type and adequacy of fire alarm and detection systems.

n. Zoning of fire alarm and detection systems.

o. Number of zones of alarm and detection systems that are separately transmitted to the base or installation fire department.

1.10.3 TECHNICAL GUIDE SPECIFICATIONS

None of the government provided guide specifications are required to be submitted at this design stage. However; any Contractor generated specifications required to meet the project specifics, or individual specification items added to the provided guide specifications shall be submitted for review. Note that guide specifications 13930, WET PIPE SPRINKLER SYSTEMS, FIRE PROTECTION and 16721, FIRE DETECTION AND ALARM SYSTEM are a part of this contract. As such they may be edited only for those portions that do not apply to this project. For the items that do apply, no changes may be made.

1.11 ENVIRONMENTAL PROTECTION, COMPLIANCE, AND PERMITS

1.11.1 General Requirements

Specification Section 01355, ENVIRONMENTAL PROTECTION, furnished with Division 1 of this RFP, contains requirements presently known to be required for environmental protection, compliance, and permits on this project. It is the Contractor's responsibility to provide any additional requirements to ensure that the project is in full environmental compliance with Federal, State, and local laws and regulations. The Contractor shall include any additional requirements in the 60% Environmental Protection, Compliance, and Permits Design Analysis Chapter and the Environmental Protection Plan for the project.

1.11.2 Design Analysis Chapter

The Contractor shall prepare a chapter in the Design Analysis entitled: "ENVIRONMENTAL PROTECTION, COMPLIANCE, AND PERMITS". This chapter shall include a summary of environmental coordination, compliance, approvals, permits, and etc. required for the project. The Contractor shall include documentation of the persons contacted along with phone numbers, summary of coordination, discussions, phone conversation records, and/or letters required to assure that the project is in full compliance with all Federal, State, and local environmental laws and regulations. A list of environmental permits, approvals, notifications, etc. that are required for the project shall be included.

1.11.3 Draft Environmental Protection Plan

The Contractor shall prepare and submit a Draft Environmental Protection Plan in accordance with the requirements of Section 01355 ENVIRONMENTAL PROTECTION. If additional environmental compliance plans are identified during the design, the Contractor shall include the additional plans.

1.11.4 Appendix to the Environmental Protection Plan

As an Appendix to the Draft Environmental Protection Plan, the Contractor shall submit copies of the permit applications and associated documents, notices, reviews, and/or approvals that are required for the project. If at 60% Design any permits or approvals have been received, copies of the permits and/or approvals shall be included.

PART 2 NOT USED

PART 3 NOT USED

-- End of Section --

This page was intentionally left blank for duplex printing.

ADA ARCHITECTURAL DESIGN CHECKLIST

Project Name: _____
Project Location: _____
Design Phase: _____

ITEM NO.	INCORP	INCORP LATER	N/A
1. Established with the Base/owner of the facility the for handicap accessibility.	_____	_____	_____
2. Received a waiver for no handicap accessibility requirements on the facility.	_____	_____	_____
3. Facility is designed utilizing:			
New Construction Criteria	_____	_____	_____
Building Alteration Criteria	_____	_____	_____
Historic Building Preservation Criteria:	_____	_____	_____
4. Accessible Route (egress/corridors/halls/aisles).			
- Provided minimum fire egress routes.	_____	_____	_____
- Provided minimum site accessible routes.	_____	_____	_____
- Provided proper clearance widths.	_____	_____	_____
- Provided proper floor level changes.	_____	_____	_____
- Provided proper floor materials.	_____	_____	_____
- Provided protection from protruding objects.	_____	_____	_____
5. Ramps:			
- Maximum slopes less than 1:12	_____	_____	_____
- Maximum run less than 30 feet for 1:12 slopes 40 feet for 1:16 slopes	_____	_____	_____
- Minimum clear width exceeds 36-inches.	_____	_____	_____
- Provided proper edge protection.	_____	_____	_____
- Provided handrails of proper configuration and diameter.	_____	_____	_____
- Provided proper handrail extensions at top and bottom of ramp.	_____	_____	_____
- Provided handrails at proper mounting heights.	_____	_____	_____
- Provided proper landings.	_____	_____	_____
- Provided proper cross slope on ramp surface.	_____	_____	_____
6. Stairs:			
- Protected the space below stairs from access by the blind.	_____	_____	_____
- Provided handrails of proper configuration and diameter.	_____	_____	_____
- Provided proper handrail extensions at top and bottom of stairs.	_____	_____	_____
- Provided handrails at proper mounting heights.	_____	_____	_____
- Provided treads greater than 11-inches in width.	_____	_____	_____
- Provided proper nosings.	_____	_____	_____

ITEM NO.	INCORP	INCORP LATER	N/A
7. Elevators:			
- Provided buttons and lanterns at the proper mounting height.	_____	_____	_____
- Provided Braille characters.	_____	_____	_____
- Provided proper door widths.	_____	_____	_____
- Provided proper clearance inside elevator car.	_____	_____	_____
8. Doors And Hardware:			
- Provided proper door widths.	_____	_____	_____
- Provided proper clearance on both sides of jambs.	_____	_____	_____
- Entrance vestibules provided with adequate clearances.	_____	_____	_____
- Provided levers on locksets and exit hardware.	_____	_____	_____
- Provided closers with mechanical adjustments.	_____	_____	_____
- Provided accessible thresholds.	_____	_____	_____
- Provided protection plates on doors heavily used by wheel chair bound people.	_____	_____	_____
9. Toilet Facilities:			
- Provided proper floor clearance through out the toilet rooms.	_____	_____	_____
- Provided minimum number of required accessible fixtures.	_____	_____	_____
- Provided accessible toilet stalls.	_____	_____	_____
- Provided stall doors with correct direction of swing.	_____	_____	_____
- Provided accessible water closets.	_____	_____	_____
- Provided grab bars at accessible water closets.	_____	_____	_____
- Provided grab bars with correct configuration and dimension.	_____	_____	_____
- Provided accessible sinks/lavatories.	_____	_____	_____
- Provided accessible urinals.	_____	_____	_____
- Provided accessible water coolers and fountains.	_____	_____	_____
- Provided accessible mirrors.	_____	_____	_____
- Provided accessible toilet accessories at required locations.	_____	_____	_____
- Provided all fixtures and accessories at proper mounting heights and clearances.	_____	_____	_____
- Provided insulated or protected exposed pipes at lavatories.	_____	_____	_____
10. Shower/Tub Facilities:			
- Provided the minimum number of accessible showers/tubs.	_____	_____	_____
- Provided showers/tubs with grab bars.	_____	_____	_____
- Provided showers/tubs with seats as required.	_____	_____	_____
- Provided controls mounted at the proper height and location.	_____	_____	_____
- Provided proper clearances and dimensions in showers/tubs.	_____	_____	_____
- Provided proper floor clearance through out shower/tubs rooms.	_____	_____	_____
- Provided doors with correct direction of swing and clearance.	_____	_____	_____
11. Storage:			
- Provided accessible cabinets, shelves, closets, and drawers as required.	_____	_____	_____
- Provided proper clearance, mounting heights, and reach provisions.	_____	_____	_____

ITEM NO.	INCORP	INCORP LATER	N/A
12. Telephones and Vending:			
- Provided the minimum number of required accessible public telephones.	_____	_____	_____
- Provided proper floor clearance around telephone.	_____	_____	_____
- Phone and controls mounted at proper heights and within reach.	_____	_____	_____
- Provided vending machines on an accessible route.	_____	_____	_____
- Provided vending machines with accessible clearances and protruding object safe guards.	_____	_____	_____
13. Fixed Or Built-in Seating And Tables:			
- Provided the minimum number of accommodations for accessibility in areas which required fixed furniture.	_____	_____	_____
- Provided proper floor clearance around furniture.	_____	_____	_____
- Provide proper knee space at tables.	_____	_____	_____
- Provided tables and counters with proper top surface heights.	_____	_____	_____
14. Assembly Areas:			
- Provided the minimum number of accessible seating spaces.	_____	_____	_____
- Provided seating which is easily accessible to emergency egress.	_____	_____	_____
- Provided companion seating.	_____	_____	_____
- Integrated and dispersed accessible seating with the rest of the seating.	_____	_____	_____
- Provided accessible dressing rooms.	_____	_____	_____
- Provided level floor surface at accessible seat locations.	_____	_____	_____
- Provided clear ground or floor space at accessible seat locations	_____	_____	_____
- Provided access to all performing areas and associated spaces.	_____	_____	_____
15. Dining Halls And Cafeterias:			
- Provided the minimum number of accessible dining spaces.	_____	_____	_____
- Provided accessible counters and bars.	_____	_____	_____
- Provided accessible aisles between tables or walls.	_____	_____	_____
- Provided clear floor space at accessible dining locations.	_____	_____	_____
- Provided accessible food service lines meeting minimum clearances and reaches.	_____	_____	_____
- Provided accessible tableware and condiment areas.	_____	_____	_____
- Provided raised speaker platform with protected edges.	_____	_____	_____
16. Medical Care Facilities:			
- At least 10% of the general patient rooms are accessible.	_____	_____	_____
- Provided the number of accessible patient rooms as required for specialized treatment, long term care, or alterations of existing patient rooms.	_____	_____	_____
- Provided at least one accessible entrance with weather protecting canopy or roof overhang.	_____	_____	_____
- Provided minimum clearances within the patient rooms and around the beds.	_____	_____	_____
- Provided accessible patient toilet/bath rooms.	_____	_____	_____

ITEM NO.	INCORP	INCORP LATER	N/A
17. Business And Mercantile:			
- Provided at least one accessible sales counter, services counter, teller, information window, etc.	_____	_____	_____
- Security bollards when provided, do not prevent access or egress to people in wheel chairs.	_____	_____	_____
18. Libraries:			
- Provided access to all reading and stack areas, reference reference rooms, reserve areas, and special facilities or collections.	_____	_____	_____
- Provided at least 5% or a minimum of one of each element or fixed seating, tables, or study carrels as accessible.	_____	_____	_____
- Provided at least one lane of check out areas as accessible.	_____	_____	_____
- Provided adequate clearance and reach distances at card catalogs and magazine displays.	_____	_____	_____
- Provide stacks with minimum clear aisle width.	_____	_____	_____
19. Temporary Lodging:			
- All common and public use areas are accessible.	_____	_____	_____
- Provided accessible units, sleeping rooms, and suites.	_____	_____	_____
- Provided sleeping accommodations for persons with hearing impairments.	_____	_____	_____
- Provided a dispersed class and a range of room options.	_____	_____	_____
- Provided accessible rooms in ADAL projects.	_____	_____	_____
- Provided an accessible route to accessible sleeping rooms.	_____	_____	_____
- Provided accessible clearance widths within sleeping rooms and around beds.	_____	_____	_____
- Provided accessible doors within accessible sleeping rooms.	_____	_____	_____
- Provided accessible fixed or built-in furniture and storage units.	_____	_____	_____
- Provided accessible controls throughout accessible units.	_____	_____	_____
- Where provided as part of an accessible unit each of the following were provided as accessible: living area, dining area, at least one sleeping area, patio/terrace/ balcony, toilet/bath, and carport/garage/parking.	_____	_____	_____
- Where provided as apart of an accessible unit, the kitchen, kitchenettes, wet bars, or similar amenities were also provided with accessible features.	_____	_____	_____
- Provided visual alarms, notification devices, and accessible telephones.	_____	_____	_____
- Provided accessible doors and doorways designed to allow passage into and within all sleeping units or other covered units.	_____	_____	_____

20. Transportation Facilities:

(This section covers Air, Rail, and Bus public transportation facilities. See Section 10 of the ADA Guide for specific requirements for these facilities)

CODE ANALYSIS

UNIFORM BUILDING CODE (UBC) AND NFPA "LIFE SAFETY CODE" ANALYSIS

1. **NFPA 101 "LIFE SAFETY CODE"**

1.1. CLASSIFICATION OF OCCUPANCY: _____

_____

HAZARD OF CONTENTS:

LOW _____
_____
_____

ORDINARY _____
_____
_____

HIGH _____
_____
_____

1.2. FIRE RESISTIVE REQUIREMENTS:

EXTERIOR WALLS: _____ HRS ____

INTERIOR WALLS: _____ HRS ____

STRUCTURAL FRAME: _____ HRS ____

VERTICAL OPENINGS: _____ HRS ____

FLOORS: _____HRS ____

ROOFS: _____ HRS ____

EXTERIOR DOORS: _____ HRS ____

EXTERIOR WINDOWS: _____ HRS ____

BOILER ROOM ENCLOSURE _____ HRS ____

OTHER (LIST) _____ HRS ____
_____ HRS ____

_____ HRS ____

1.3. MEANS OF EGRESS:

OCCUPANCY LOAD FACTOR: _____

OCCUPANCY FACTOR ACTUAL AREA ACTUAL LOAD

_____
_____
_____
_____
_____

1.4. NUMBER OF EXITS REQUIRED: _____
_____
_____
_____
_____

1.5. MINIMUM WIDTH OF EXITS:

CALCULATED: _____
_____
_____

ACTUAL: _____
_____

1.6. MAXIMUM ALLOWABLE TRAVEL DISTANCE TO EXIT: _____
_____

WITH SPRINKLERS: _____
_____

1.7. EXIT DOORS:

MINIMUM WIDTH ALLOWED:_____
MAXIMUM LEAF WIDTH ALLOWED: _____
WIDTH REQUIRED FOR NO.OF OCCUPANTS: _____
_____

1.8. EXIT CORRIDORS:

MAX. COMMON PATH OF TRAVEL: _____
MINIMUM ALLOWABLE WIDTH: _____

REQUIRED TO HAVE EXIT AT EACH END OF CORRIDOR? ___
_____
DEAD END CORRIDORS ALLOWED? _____
MAXIMUM LENGTH: _____
WALL FIRE RESISTANCE REQUIRED: _____
_____
_____
DOORS & FRAME FIRE RESISTANCE REQUIRED: _____
_____
_____

1.9. STAIRS:

MINIMUM WIDTH _____ FOR OCCUP. LOAD OF _____
MINIMUM WIDTH _____ FOR OCCUP. LOAD OF _____
MINIMUM WIDTH _____ FOR OCCUP. LOAD OF _____
MINIMUM WIDTH _____ FOR OCCUP. LOAD OF _____

MAX. RISER ALLOWED: _____
MINIMUM TREAD ALLOWED: _____

LANDINGS:

MIN. SIZE: _____
MAX. VERTICAL DIST. BETWEEN LANDINGS: _____
_____
_____
REQUIRED HEIGHT OF RAILINGS: _____
_____

HANDRAILS:

REQUIRED AT EACH SIDE? _____
INTERMEDIATE RAIL REQUIRED? _____
HEIGHT ABOVE NOSING _____
INTERMEDIATE RAIL REQUIRED? _____
MAX. SPACE ALLOWED BETWEEN RAILS: _____
_____

STAIR ENCLOSURE REQUIRED? _____

STAIR TO ROOF REQUIRED? _____

STAIR TO BASEMENT REQUIRED? _____

1.10. HATCHWAY ACCESS TO ROOF REQUIRED? _____

1.11. LADDER ACCESS TO ROOF REQUIRED? _____

1.12. HORIZONTAL EXIT REQUIREMENTS: _____
_____
_____

1.13. PROTECTION OF OPENINGS NEAR EXTERIOR STAIR EXIT DOORS:
_____
_____
_____

1.14. SMOKEPROOF ENCLOSURE REQUIRED: _____
_____

1.15. RAMPS:
MAX. SLOPE TO USE AS EXIT _____
HANDRAILS REQUIRED? _____

1.16. COMMENTS:

_____
_____
_____
_____
_____
_____

DESIGNER: _____

FOLLOWING IS A LIST OF ADDITIONAL "NFPA" CODES THAT ARE COMMONLY USED. INDICATE WHICH OF THESE CODES ARE USED AND ADD THOSE REQUIREMENTS TO THIS ANALYSIS.

MIL HDBK-1008C	FIRE PROTECTION FOR FACILITIES, ENGR, DESIGN AND CONSTRUCTION.
NFPA 10	FIRE EXTINGUISHERS, PORTABLE
NFPA 75	COMPUTER/DATA PROCESSING FACILITIES
NFPA 80	FIRE DOORS AND WINDOWS
NFPA 88A	PARKING STRUCTURES
NFPA 409	AIRCRAFT HANGARS
AFM 88-4	DATA PROCESSING FAC. DESIGN AND CONST.
AF ETL 89-3	FIRE PROTECTION CRITERIA FOR ELECTRONIC EQUIPMENT INSTALLATIONS.

This page was intentionally left blank for duplex printing.

SECTION TABLE OF CONTENTS

DIVISION 01 - GENERAL REQUIREMENTS

SECTION 01338

100 PERCENT DESIGN REQUIREMENTS

PART 1 100 PERCENT DESIGN SUBMITTALS

1.1 SITE PLANNING
1.1.1 Drawings
1.1.1.1 Location Plan and Vicinity Map
1.1.1.2 Survey Plan
1.1.1.3 Removal Plan
1.1.1.4 Site Plan
1.1.1.5 Free Zone and Construction Limit Plan
1.1.1.6 Site Furnishing Details
1.1.1.7 Landscape Plan
1.1.1.8 Landscape Details
1.1.1.9 Composite Utilities Plan
1.1.2 Specifications
1.1.3 Design Analysis Narrative
1.1.3.1 References
1.1.3.2 Basis For Design
1.1.3.3 Calculations
1.2 CIVIL
1.2.1 Drawings
1.2.1.1 Grading and Drainage Plan
1.2.1.2 Grading Sections
1.2.1.3 Storm Drain Profiles
1.2.1.4 Drainage Structure Details
1.2.1.5 Pavement Details
1.2.1.6 Pavement Joint Layout Plans
1.2.1.7 Concrete Pavement Joint Details
1.2.1.8 Fence Details
1.2.1.9 Erosion Control Details
1.2.2 Specifications
1.2.3 Design Analysis Narrative
1.2.3.1 References
1.2.3.2 Grading
1.2.3.3 Drainage
1.2.4 Design Analysis Calculations
1.2.4.1 Storm Drainage System Calculations
1.3 GEOTECHNICAL
1.4 WATER SUPPLY AND WASTEWATER
1.4.1 Drawings
1.4.1.1 Water Distribution and Sewage Collection Systems Plans (including building services)
1.4.1.2 Water Distribution and Sewage Collection Systems Profiles
1.4.1.3 Water Distribution and Sewage Collection Systems Details
1.4.2 Specifications
1.4.3 Design Analysis Narrative
1.4.3.1 References
1.4.3.2 Water Supply and Distribution Systems
1.4.3.3 Wastewater and Sewers
1.5 ARCHITECTURAL
1.5.1 Drawings

1.5.2 Technical Specifications
1.5.3 Design Analysis Narrative
1.5.4 Design Analysis Calculations
1.5.5 Common Deficiencies
1.6 INTERIORS
1.6.1 DESIGN ANALYSIS/NARRATIVE
1.6.2 DRAWINGS
1.6.2.1 FURNITURE FOOTPRINT
1.6.2.2 [Enter Appropriate Subpart Title Here]
1.6.3 TECHNICAL SPECIFICATIONS
1.6.4 COLOR BOARDS AND LEGENDS
1.7 STRUCTURAL
1.7.1 DRAWINGS
1.7.1.1 Grid Systems, Dimensions, and Floor Elevations
1.7.1.2 Plan Sheets
1.7.1.3 Elevation Views, Sections and Details Sheets
1.7.1.4 Schedules
1.7.1.5 Equipment Loads
1.7.1.6 Notes
1.7.2 SPECIFICATIONS
1.7.3 DESIGN ANALYSIS NARRATIVE
1.7.4 DESIGN ANALYSIS CALCULATIONS
1.7.4.1 Computer Calculation Submittals
1.8 MECHANICAL
1.8.1 DESIGN DRAWINGS
1.8.1.1 Mechanical Abbreviation, Legend, and General Notes Sheet
1.8.1.2 Plumbing Drawings
1.8.1.3 Mechanical HVAC Drawings
1.8.1.4 HVAC Control Drawings
1.8.2 TECHNICAL SPECIFICATIONS
1.8.3 DESIGN ANALYSIS NARRATIVE
1.8.4 DESIGN ANALYSIS CALCULATIONS
1.9 ELECTRICAL
1.9.1 Drawings
1.9.1.1 Interior Drawings
1.9.1.2 Floor Plans
1.9.1.3 Diagrams
1.9.1.4 Schedules
1.9.1.5 Exterior Drawings
1.9.2 Specifications
1.9.3 Design Analysis Narrative
1.9.4 Design Analysis Calculations
1.9.4.1 Service
1.9.4.2 Transformers
1.9.4.3 Feeders
1.9.4.4 Panelboards
1.9.4.5 Voltage drop determination
1.9.4.6 Illumination calculations
1.9.4.7 Short Circuit Evaluation
1.9.4.8 Protective Coordination Analysis
1.9.4.9 Specialized Applications
1.10 FIRE PROTECTION
1.10.1 DRAWINGS
1.10.2 DESIGN ANALYSIS
1.10.3 TECHNICAL GUIDE SPECIFICATIONS
1.11 ENVIRONMENTAL PROTECTION COMPLIANCE
1.11.1 Guide Specifications
1.11.2 Design Analysis
1.11.3 Submittal of Environmental Approvals, Permit Application and

Associated Documents

PART 2 NOT USED

PART 3 NOT USED

-- End of Section Table of Contents --

SECTION 01338

100 PERCENT DESIGN REQUIREMENTS

PART 1 100 PERCENT DESIGN SUBMITTALS

For general submittal requirements, see Section 01332 SUBMITTALS DURING DESIGN.

1.1 SITE PLANNING

1.1.1 Drawings

1.1.1.1 Location Plan and Vicinity Map

A vicinity map consists of a small scale drawing of the project location, similar to a road map. A Location Plan consists of a small scale drawing showing the Government property or reservation limit with the construction project site shown. The drawing shall show the facility approved Contractor access and haul routes.

1.1.1.2 Survey Plan

The information depicting existing conditions used to generate site drawings shall be shown on this drawing. An engineering survey of the site will be presented to the Contractor selected as a result of this RFP process. Any additional survey information required by the Contractor for design above that shown in the prepared engineering survey shall be procured and paid for by the Contractor.

1.1.1.3 Removal Plan

The removal plan will show the existing physical features and condition of the site before construction. This information should include the field survey to show all above and below ground utilities; buildings, drives, roads and parking areas, walks, and vegetation; and such facilities as retaining walls, underground storage tanks, foundations, etc. Each physical feature to be removed shall be as indicated on the standard legend sheet, a legend on the removal plan, and properly noted: to be removed, to remain, or to be relocated. No existing or proposed contours shall be shown on this plan.

1.1.1.4 Site Plan

The site plan shall show all the site layout information necessary to field locate the building, service drives, walks, and all other appurtenances to be constructed on the project. All site related work to be constructed will be located by dimensions. The site plan will identify all site related items such as: curbs, pavements, walks, courtyards, bollards, trash enclosures, chiller units, electrical transformers locations, etc. in accordance with a standard legend sheet or with additional legends or notes. Site plans shall be at a scale of 1" = 30' or 1" = 40'. No existing or proposed contours shall be shown on this plan. The site plan, prior to adding the dimensions, should serve as the base sheet to the other plans, such as: utilities plan, grading and drainage plans and landscape plan. The site plan shall show all existing physical features and utilities within and adjacent to the work site that will remain after the proposed construction has been completed. Whenever the Site Plan occupies

more than one sheet of drawings, a key plan shall be included. Additional plans showing specific areas of the site in smaller scales can be included if more detail is necessary.

1.1.1.5 Free Zone and Construction Limit Plan

The free zone and construction limit plan shall show all free zones, construction limits, and storage areas, staging areas, etc. The scale shall be appropriate to the information provided. Any specific construction phasing and security concerns shall be included in these plans.

1.1.1.6 Site Furnishing Details

The Contractor shall provide designs and details as necessary for site furnishings and accessories.

1.1.1.7 Landscape Plan

A landscape plan showing trees, shrubs, ground covers, seeded and sodded areas, shall be prepared. The landscape plan shall be prepared by a fully qualified, experienced professional Landscape Architect. The A-E (Contactor's Designer) shall specify types of plant materials that are locally grown, commercially available and acclimated to the project environment. The landscape plan shall include a plant materials schedule or listing. This schedule shall include botanical names, common names, key, size and the method of transplanting. The landscape plan shall also show all unsurfaced ground areas disturbed by construction within the project limits with these areas shown to be seeded, sodded, or mulched as required.

1.1.1.8 Landscape Details

The Contractor shall verify the methods of planting to meet the project site/installation requirements and provide the necessary Landscape Details to perform the contract design work. Details shall reflect local practices and conditions for installation. The Contractor shall provide designs and details as necessary for other required site furnishings and accessories.

1.1.1.9 Composite Utilities Plan

A composite utilities plan shall be provided at a scale of 1" = 30' or 1" = 40'. New and existing utilities shall be indicated. Plans shall show layout of the new and existing storm drainage systems, gas systems, sanitary systems, electrical systems, communication systems, water systems, steam systems and any other utilities which need to be provided for. Include new and existing contours.

1.1.2 Specifications

a. Provide complete edited specifications for all items. Technical specifications shall be complete and fully coordinated with the drawings. All specification indexes shall be completely edited to reflect the paragraphs retained in the body of the specification. All references that have not been used in the body of the specification shall be edited from the technical specification.

b. Specifications shall be coordinated with the plans and include all items including seeding, sodding, trees and shrubs. Special sections shall be prepared to cover those subjects for which no pattern guide

specifications are available. These special sections shall include all approved changes from the 60 percent review stage. All guide specifications, to be provided, shall be in edited form showing all text to be deleted and added. These specifications shall include all changes requested during the 60% review stage.

1.1.3 Design Analysis Narrative

Design analysis shall include the following:

1.1.3.1 References

Provide design references used in preparing the Site design.

1.1.3.2 Basis For Design

The Design Analysis should give the basis, specific goals, objectives and priorities for site design of the project. Identify, explain and document use of design criteria and how the design meets goals, objectives and priorities. Identify the preferred site development concept. Document pollution prevention measures and other environmental considerations made during design.

1.1.3.3 Calculations

a. Sprinkler Irrigation System Plan: Sprinkler irrigation plan shall designate the trees, shrubs, bushes, ground cover, and lawn area to be irrigated. Provide flow and pressure requirements. Also include appropriate details.

b. Sprinkler Irrigation System Design Parameters: A list of applicable criteria and/or design standards shall be provided. This shall also include precipitation rates, pipe sizes and material and complete calculations of total flow and pressure requirements and head losses. A narrative description of the system including special requirements and trickle systems shall be provided.

1.2 CIVIL

1.2.1 Drawings

1.2.1.1 Grading and Drainage Plan

A final grading and drainage plan shall be provided at the same scale as the site plan. In addition to the requirements for the preliminary plan, the final plan shall show the final location of all storm drains and roof drains. Storm drainage lines and structures shall be labeled. The rim elevation of all manholes, curb inlets, and area inlets shall be indicated. Provide spot elevations at building corners, access drives, sidewalks, changes in grade, etc. Provide location and description of benchmarks and indicate vertical and horizontal datums.

1.2.1.2 Grading Sections

The preliminary grading sections shall be revised as necessary.

1.2.1.3 Storm Drain Profiles

Provide profiles of all new storm drains showing new and existing grades,

new and existing utilities, pavement sections in detail, pipe diameters and lengths, pipe slopes, invert elevations, etc. Class and gauge of all storm drain, subdrain, and culvert pipes shall be provided. Profiles of roof drain runout lines may or may not be provided, at the Contractor's discretion.

1.2.1.4 Drainage Structure Details

Provide typical details of all storm drainage structures. Unless otherwise directed, use Omaha District standard detail drawings. The use of alternate details shall be approved prior to the final design documents. A, B, C, and D dimensions of all storm drain structures shall be shown. Dimensions may be shown on either the storm drain schedules, profiles, or structure detail drawings.

1.2.1.5 Pavement Details

Provide details of concrete curb and gutter, integral curb, typical pavement sections, typical sidewalk section, and interface detail between new and existing pavement.

1.2.1.6 Pavement Joint Layout Plans

Provide pavement joint layout plans with spot elevations at joint intersections for all new concrete pavements. Each type of joint shall be shown with a different symbol and a joint legend provided. Pavement joint layout plans shall be drawn at a scale of 1" = 10' or 1" = 20'. Under no circumstances shall pavement joint layout plan be combined with any other plans.

1.2.1.7 Concrete Pavement Joint Details

Provide concrete pavement joint details. Use Omaha District standard detail drawings.

1.2.1.8 Fence Details

Provide details of fence and gates. Use Omaha District standard detail drawings.

1.2.1.9 Erosion Control Details

Provide details of best management practices used to control erosion.

1.2.2 Specifications

Provide complete edited specifications for all items. Technical specifications shall be complete and fully coordinated with the drawings. All specification indexes shall be completely edited to reflect the paragraphs retained in the body of the specification. All references that have not been used in the body of the specification shall be edited from the technical specification.

1.2.3 Design Analysis Narrative

Design analysis shall include the following:

1.2.3.1 References

Provide design references used in preparing the civil design.

1.2.3.2 Grading

A narrative of the grading design and criteria used.

1.2.3.3 Drainage

A narrative of the drainage design and criteria used. Include information on the storm drain pipe materials selected and their ability to withstand earth dead loads and live loads that will be imposed.

1.2.4 Design Analysis Calculations

1.2.4.1 Storm Drainage System Calculations

Storm Drainage System Calculations shall include the following:

a. Drainage area map showing boundaries of each drainage area and respective drain inlet or culvert.

b. Storm run-off calculations for each drainage area.

c. Tabulation of capacities of new storm drains including: diameter and slope of storm drain pipes, design storm discharge and velocity for each storm drain pipe, maximum discharge capacity of each storm drain pipe, headwater depth of each culvert during design storm discharge.

1.3 GEOTECHNICAL

See Structural Design Requirements.

1.4 WATER SUPPLY AND WASTEWATER

1.4.1 Drawings

Generally, the corrected and approved 60 percent plans may be used as the basis for the final plans. However, all profiles and details necessary for complete construction must be included. The 100 percent final design submittal shall include all the information presented in the 60 percent submittal, updated to final design status, corrected to reflect any changes made in response to review comments, and shall include the additional requirements specified hereinafter. Any concerns in developing the final design documents shall be resolved prior to starting the final design stage.

1.4.1.1 Water Distribution and Sewage Collection Systems Plans (including building services)

Provide all existing utilities and above ground features, including sizes and material types, which may pose as an obstacle (i.e., water, sewer, gas, electrical, etc.) on the basic site plan layout. Indicate existing pipe material and sizes where new lines connect along with the type of connection and elevations of connections. Provide all new water and sewer lines with sizes. This will include all new service lines, up to within the 5 foot building line. Locations of all new manholes, fire hydrants, valves (including PIV's), similar appurtenances, connection points and etc. shall be provided. Show contours on plan view. Include stationing on both plan and profile sheets.

1.4.1.2 Water Distribution and Sewage Collection Systems Profiles

Profiles of all gravity sewers, waterlines and sewage forcemains shall be provided. Profiles may be omitted for short waterlines, unless necessary to assure adequate cover or avoid interference with other underground facilities. Indicate existing pipe material and sizes where new lines connect. Indicate type of connection and elevation. Include all interference elevations.

1.4.1.3 Water Distribution and Sewage Collection Systems Details

Appropriate water and sewer details shall be provided. Use Omaha District standard detail drawings. The standard detail sheets will be furnished if required. For roadway pavement crossings, indicate installation method (open cut, boring, jacking, etc.). Include standard casing details.

1.4.2 Specifications

Specifications shall be coordinated with the plans and include all items. Provide special sections to cover those subjects for which no UFGS guide specifications are used or available. These special sections shall include all approved changes from the 60 percent review stage. All UFGS guide specifications, to be provided, shall be in edited form showing all text to be deleted and added.

1.4.3 Design Analysis Narrative

Design analysis shall include the following and all applicable data contained in the 60 percent design analysis narrative shall be repeated. References shall not be made to the previous design analysis. The final design analysis shall be corrected to reflect changes in content made in response to review comments, and shall be expanded to reflect the completed design.

1.4.3.1 References

Provide design references used in preparing the water and wastewater design.

1.4.3.2 Water Supply and Distribution Systems

A narrative of the water supply and distribution systems design and applicable criteria used shall be provided. Include the peak domestic demands based on fixture counts, the interior and exterior fire flow requirements and the available flow and residual pressures. A description of the water distribution system, and complete calculations necessary to support equipment, piping sizes, interior and exterior fire demands, and domestic demands, etc. shall be provided.

1.4.3.3 Wastewater and Sewers

A narrative of the wastewater supply design and applicable criteria used shall be provided. Include the peak contributing flows along with the available capacity and full flow capacity of the existing system. A listing of allowable piping materials, and complete calculations necessary to support equipment and piping sizes shall be provided.

1.5 ARCHITECTURAL

1.5.1 Drawings

The drawings shall be complete, include all necessary and required details, thoroughly checked, and fully coordinated with the technical Specifications and all other Construction Documents. Previous comments and applicable criteria changes shall have been incorporated into the design. Removal work and details should be shown on separate drawings. The contract drawings shall fully describe the type and the scope of work required. The layout of individual sheets and the organization of the assembled set shall follow and communicate a logical sequence. General information shall be presented first, progressing to more detailed information. When assembling details, begin in the upper left-hand corner of the sheet with letters progressing to the right and down. When dimensioning, use arrowheads, not dots or slashes. Where major structural elements are included as parts of architectural detailing, do not indicate sizes. These elements must be fully defined in the structural design documents. See 60% Architectural drawing submittal requirements for drawing scales of remaining drawings to be submitted. Include all drawings from the 60% submittal plus all additional detail drawings required for complete 100% design. These shall include but not be limited to the following:

Interior Elevations and Details
Door Details
Window Details
Louver Details
Roof Details
Stair Details
Casework Plans, Elevations, and Details
Wall Plan Details and Plan Details
Fire Wall Details and Penetration Conditions
Sealant Details
Ceramic Tile Details
Ceiling Details
Control/Expansion Joint Details
All Miscellaneous Details

1.5.2 Technical Specifications

The technical specifications shall be complete and fully coordinated with the drawings. Special sections shall be prepared to cover those subjects for which no pattern guide specification is available. Notes to the Designer that accompany specifications shall be used in editing technical guide specifications. All specification indexes shall be completely edited to reflect the paragraphs retained in the body of the specification. All UFGS guide specifications shall be edited in accordance with Section 01332 SUBMITTALS DURING DESIGN.

1.5.3 Design Analysis Narrative

The Design Analysis shall include the basic information presented in the previous submittal, corrected to reflect changes in content made in response to review comments. Outline specifications shall be omitted from the Final Design Analysis as the information is included on the final drawings and project specifications. The design analysis shall be written in the present tense.

1.5.4 Design Analysis Calculations

The Design Analysis calculations shall include the basic information presented in the previous submittal, corrected to reflect changes in content made in response to review comments.

1.5.5 Common Deficiencies

Some repeated errors have occurred in the preparation of design documents in the past. Subsequently these errors have been identified and the Contractor directed to make corrections. The work involved in such corrections becomes lost effort and time for the designer. Some of these errors which are most often overlooked include:

a. Not using correct abbreviations or terminology on the drawings. Abbreviations must match what is used on the standard abbreviation sheet and terminology must match what is used in the standard technical guide specifications.

b. Not using the correct scales, north arrow designation, section cut system, or incomplete dimensioning on the drawings.

c. Not providing sufficient space for door operation hardware at doors which swing into a wall running perpendicular to the opening. 4-inches minimum is required between edge of door frame and perpendicular walls.

d. Not providing correct and complete Design Analysis information written in the present tense. The Design Analysis will be written following the format indicated herein. A separate Fire Protection section in the Design Analysis with input from all disciplines is one area which is often overlooked and shall be included.

e. Not providing a structural stoop at exterior doors where the slab is at the same approximate elevation as the interior floor. The use of simple slabs on exterior grade leads to lifting of the slab in below-freezing temperatures which interferes with the safe operation of the door.

f. Not correctly presenting or coordinating (to avoid interference) features of Fire Protection, Noise Control, and Physical Security.

g. Not correctly referencing and cross referencing building sections, wall sections, details, etc.

h. Failure to read/use technical notes in editing the Technical Guide Specifications.

i. Failure to coordinate all disciplines prior to submittal of projects for review.

j. Improper use of fire-retardant wood. Fire-retardant wood is combustible; its use in buildings that are of noncombustible construction is extremely limited (see UBC for the minor allowable uses). Because of the potential for severe degradation, fire retardant plywood shall not be used in a roof or roofing system, or in structural applications.

k. Incorrectly listing trade names in door hardware specifications in lieu of ANSI numbers and failure to correctly specify hardware finishes.

l. Control joints in CMU walls and brick expansion joints in face

brick are not shown on both architectural plans, elevations and structural plans, or are inconsistent. Note also control joint locating and coordination for floor tile per Tile Council of America recommendations.

m. Failure to delete all publications which do not apply to the particular project.

n. North is not oriented the same direction on all sheets (civil, site, arch).

1.6 INTERIORS

1.6.1 DESIGN ANALYSIS/NARRATIVE

Updates as a result of the 60% review conference shall be made to the design analysis.

1.6.2 DRAWINGS

1.6.2.1 FURNITURE FOOTPRINT

Updates required to the furniture footprint as a result of 60% review shall be incorporated into the drawings.

1.6.2.2 [Enter Appropriate Subpart Title Here]

1.6.3 TECHNICAL SPECIFICATIONS

Technical specifications shall be in final form for construction (in accordance with the requirements of Section 01332 SUBMITTALS DURING DESIGN) and shall include all changes requested during the 60% review stage. All specifications shall be completely edited and fully coordinated with the drawings to accurately and clearly identify the product, installation requirements, and testing methods for this facility.

1.6.4 COLOR BOARDS AND LEGENDS

Color boards shall show actual color samples of all proposed exterior and interior finishes, specialties, and prewired workstations. A color board legend shall accompany the boards and shall clearly identify all finishes. Clarification of finish placement shall be required when more than one color of a single finish is proposed. Color boards shall be 8 1/2" x 11" in size and be provided in a three ring binder. Include project name and location, design stage and date on the front cover and spine of the binder.

1.7 STRUCTURAL

1.7.1 DRAWINGS

Final drawings shall be complete, thoroughly checked, and fully coordinated with the other disciplines, specifications and all other construction documents. Previous comments and applicable criteria changes shall have been incorporated into the design. The drawings shall be complete with all plan views, elevations, sections, details, schedules, diagrams, and notes necessary for the construction of the project. For structural steel framing, the drawings shall meet the requirements for design drawings set forth in the AISC Specification for the Design, Fabrication, and Erection of Structural Steel for Buildings. All structural steel members and

connections shall be fully detailed. Design of structural steel connections shall be the responsibility of the structural design engineer and shall not be delegated to the steel fabricator. For structural concrete, the drawings shall conform to the standards for engineering (design) drawings set forth in the ACI Detailing Manual-1988 (SP-66). Additionally, those items described below which are applicable to the design shall be incorporated into the drawings. Drawings shall be at a scale appropriate for the design, in no case however, shall plan type drawings be done at a scale smaller than 1/4"=1'-0" or detail type drawings at scale smaller than 3/4"=1'-0".

1.7.1.1 Grid Systems, Dimensions, and Floor Elevations

Each foundation and slab plan, floor framing plan and roof framing plan shall have an alpha-numeric grid system aligned with any columns or pilasters, or with load bearing and non-load bearing walls, as applicable. The same grid system shall be used for all plan views. Each plan view shown shall have all necessary dimensions. On plan views, the dimensions shall define the location of grid lines, offsets, and all structural elements, as well as the overall sizes of the structure. The finish elevation of the ground floor slab shall be indicated as 100'-0", and elevations for all other structural elements shall be numerically referenced to this basic elevation.

1.7.1.2 Plan Sheets

a. Foundation and Slab Plans: Foundation and slab plans shall show the size and location of all foundation elements, such as foundation walls and footings. Elevations for footings shall be indicated on the plan. Plans for slabs-on-grade and exterior stoop slabs at building entrances shall show location and type of joints, slab thicknesses and reinforcing, elevation of slab surfaces, and any other design features, such as equipment bases, which affect the slab design. Also, indicate that slabs are placed over capillary water barrier,geotextile, and vapor barrier .

b. Roof and Floor Framing Plans: Roof and floor framing plans shall be provided for all parts of the structure. Plans shall show the size, spacing, and location of all roof and floor framing members, their supporting columns, pilasters or walls, all auxiliary members such as bracing and bridging, and the size and location of all major openings through the roofand floors. Weights of mechanical equipment shall also be shown.

1.7.1.3 Elevation Views, Sections and Details Sheets

Elevation views, sections and details necessary to illustrate fully the design shall be provided. Some requirements peculiar to the various structural materials are described below.

a. Concrete: Include elevation views as necessary, plus sections and details to show the outlines of concrete cross-sections, reinforcing bar arrangements, concrete cover for rebar, installation of embedded items, and joint construction. All lap splice and embedment lengths for reinforcing bars shall be clearly indicated on the drawings. A sill detail for each foundation condition at exterior and interior doors shall be provided. Show types of precast concrete and their connects to the foundation and structure.

b. Masonry: Wall reinforcing shall be located and identified on plans, in section cuts, elevation views or in schedules. Structural elevations when needed shall be included to clarify the construction requirements for masonry reinforcement, especially the reinforcement around wall openings. Details applicable to the project shall be shown on the structural drawings. Listed below are some frequently required masonry details, most of which are shown in Air Force Technical Manual AFM 88-3, Chp 13, and on the Typical Masonry Sheets. The Typical Masonry Sheets will be provided to the successful offeror upon request and may be edited and incorporated into the final drawings as needed. Additional details as required shall be extracted from other sources and incorporated into the final drawings. All details shall be fully edited to reflect the specific requirements of this project. Supplemental details shall be added as necessary to complete the design.

Masonry Details Frequently Used

- Masonry Control Joint (MCJ).
- Control Joint at Bond Beam.
- Bond Beam Corner Reinforcement.
- Seismic Reinforcement Around Wall Openings.
- Wall Reinforcement Details for l and/or 2 bar-per-cell stiffeners.
- Doweled or Other Connection of Masonry to Foundation, Floor, Roof or Bond Beam.
- Bond Beam (or Steel) Lintels and Bearing Details
- Lateral Support Detail for Top of Masonry Partition Walls. (lateral support locations must be shown on framing plan sheets.)

c. Structural Steel, Steel Joists, and Steel Decking: Structural steel connections shall be fully detailed and shown on the drawings. The anchorage of beams, trusses, joists, and steel deck to walls or other bearings, and the extra framing or reinforcement required at deck openings shall also be detailed. Notes, details, or schedules on the drawings shall indicate the steel deck attachment method to be used, and shall give the size and spacing for perimeter, side lap, intermediate supports and end lap attachments. Welded connections shall be detailed using standard weld symbols illustrated in AWS D1.1. All applicable weld sizes, spacing, types, contours and finishes shall be shown.

1.7.1.4 Schedules

a. Foundation Schedules: Foundation schedules for footings shall be included, as applicable. The schedule shall include all pertinent information required for the foundation system being used.

b. Framing Schedules: For concrete framing, beam and column schedules shall conform to the requirements of the ACI Detailing Manual. For structural steel framing, provide a column schedule complete with design loads at splices, if any, and at column bases.

1.7.1.5 Equipment Loads

All equipment loads which exceed 200 lbs and are not supported by concrete slab-on-grade shall be identified on the drawings by showing equipment locations, total weights, and reaction loads at support points.

1.7.1.6 Notes

a. Design Notes: Under the heading "Designer's Notes," the structural drawings shall contain notes which begin: "The structural design was prepared using the following data:". The data then listed shall include the structural loading criteria used for design, such as roof and floor live loads, snow load design parameters, wind speed and wind load design parameters, seismic design parameters (SS, S1, Site Class, and Occupancy Category), allowable soil bearing pressures (as recommended by the Final Foundation Analysis report), foundation design depth, design wind uplift pressures for steel joists and other data pertinent to future alterations. Also, to be listed are the ASTM designations and stress grades of the applicable structural materials: steel, masonry, concrete for each usage, reinforcing bars, welds, and bolts.

b. General Notes: Other notes, which direct the work to be performed, the materials to be used, etc., shall be grouped under the heading of "General Notes." Included in these notes should be a description of the building's structural system, if necessary.

1.7.2 SPECIFICATIONS

Technical specifications for final design shall be prepared in accordance with the instructions provided in Section 01332 SUBMITTALS DURING DESIGN, Paragraph 3.2 "Specifications". The technical specifications shall be complete and fully coordinated with the drawings. All specification indexes shall be completely edited to reflect the paragraphs retained in the body of the specification. All references that have not been used in the body of the specification shall be edited from the technical specification.

1.7.3 DESIGN ANALYSIS NARRATIVE

The final design analysis narrative shall repeat and expand upon the basic information presented in the 60% design analysis narrative, and shall be corrected to reflect revisions made for the final design.

1.7.4 DESIGN ANALYSIS CALCULATIONS

Calculations shall be prepared by an experienced structural engineer and shall include an investigation of loading, (gravity, wind, seismic, etc.) shear, moment, wind uplift, stability and deflection calculations. The computations are to be systematic and accurate. Similar beams, columns, panels, or connections may be grouped by designing the largest member or connection in the group, but every individual slab, beam, column, footing, connection or other structural member or structural consideration indicated by the plans shall be accounted for by pertinent calculations, statement or reasoning, or reference to source. Design formulas shall be written out in symbols the first time each is used, before the numerical values are supplied. All answers shall be identified by dimensional units. Basic assumptions of loads, working stresses, and methods of analysis must appear in the calculations; these assumptions must be applied consistently to a given problem. The calculations shall be presented in a clear and legible form, incorporating a title page, table of contents, and a tabulation showing all design loads and conditions. Pages shall be numbered consecutively and identified in the table of contents. Cross referencing shall be clear. The source of loading conditions, formulas, and references will be identified. Assumptions and conclusions will be explained. Superseded areas of computations must be ruled out. All computations shall be given a complete numerical and theoretical check

within the Contractor's office. Calculation sheets shall carry the names or initials of the developer and the checker, and the dates of calculations and checking. No portion of the design calculations shall be developed and checked by the same individual.

1.7.4.1 Computer Calculation Submittals

All applicable input and output data shall be included in readable printed form as part of the design calculations. Continuous paper such as that used in computer terminals or printers shall be cut into individual pages and shall not be submitted in a continuous roll form. All input and output data shall include a brief synopsis of the computer program(s) stating required input, method of solution, approximations used, codes and specifications used, output generated, extent of previous usage or certification of the program(s), and program author(s). Generalized flow chart(s) may be used to supplement description of solution process, if desired. All computer generated and long-hand calculation sheets shall be identified by sheet number, indexing and cross-referencing. Each member or structure being analyzed shall be identified, dimensioned and shown in a loading diagram. A separate diagram shall be provided for each load case, such as dead plus live, dead plus wind, etc. Input and output values including intermediate values shall clearly be identified if such values are necessary for evaluation of the submittal.

1.8 MECHANICAL

The 100 percent final design submittal shall include all the information presented in the 60 percent submittal, updated to final design status, corrected to reflect any changes made in response to review comments, and shall include the additional requirements specified hereinafter. Any concerns in developing the final design documents shall be resolved prior to starting the final design stage.

1.8.1 DESIGN DRAWINGS

The final design drawings shall be fully coordinated with the design analysis and specifications. Provide sufficient plans, piping diagrams and isometrics, mechanical room sections, water and air flow diagrams, details, schedules, control diagrams, sequences of operation, etc., as necessary to define the design requirements. Large-scale plans of congested areas shall be provided. Coordinate with architectural design for provision of access panels for all concealed valves, traps and air vents, etc. Floor plans shall use the architectural floor plans as a basis, with the building outline half-toned. The final design drawings shall include all the requirements and drawings defined for the 60 percent submittal. In addition, the following new drawing requirements and drawings shall be provided:

1.8.1.1 Mechanical Abbreviation, Legend, and General Notes Sheet

On this sheet, include any mechanical general installation notes that may be required to clarify the construction intent that may not be readily apparent in the specifications or on the drawings. General notes may be provided on a separate sheet if space does not exist on the Abbreviation and Legend sheet.

1.8.1.2 Plumbing Drawings

Enlarged Toilet Room Plans:

Enlarged toilet room plans showing all fixtures, water, waste, and vent piping shall be provided for each toilet area. Enlarged plans shall be drawn at a minimum 1/8" = 1'-0" scale.

1.8.1.3 Mechanical HVAC Drawings

Hot Water System Flow Diagram:

Provide a hot water flow diagram showing the boiler, pumps, and all connected heating equipment including radiant floor heating system. Each equipment item shall show associated flowrate. All thermometers, pressure gauges, isolation and control valves, bypass piping, etc. shall be shown on the flow diagram.

Chilled Water System Flow Diagram:

Provide a chilled water flow diagram showing the cooler, pumps, and all connected cooling equipment. Each equipment item shall show associated flowrate. All thermometers, pressure gauges, isolation and control valves, bypass piping, etc. shall be shown on the flow diagram.

1.8.1.4 HVAC Control Drawings

In addition to the updated Controls Legend and System Block Diagram Sheets, final HVAC control drawings for each system and item of equipment shall be in accordance with the following requirements:

Control Diagrams:

Control Diagrams shall be provided for each system or item of equipment. Systems diagrams shall include every major component installed in or connected to the system, and only one system shall be shown on each diagram. Control Diagrams shall schematically show all sensors, controllers, actuators, indicators, and operator interface devices that are required for the complete automatic control and monitoring of the system. All sensing devices utilized in the control or instrumentation of the system, and all actuating devices shall be shown in their correct mechanical location and functionally interconnected to the other control devices which comprise the control loop. All controlling devices shall be shown with all functional interconnections to inputs and outputs. Each sensing, controlling, actuating, and indicating device shall have its own unique control loop tag identifier. Communication linkages required to complete the entire intended interface between operators and the control system shall be shown schematically. This includes interconnections between local temperature control panels and the base EMCS. All associated thermometers and pressure gauges, located in their correct mechanical locations, shall also be shown on the diagrams. See furnished Example HVAC Control Drawings for the required level of detail and formatting.

Sequence of Operations:

Sequence of Operations shall be provided for each item of equipment or system and shall fully describe the intended operation of the equipment or system in all different operating modes. As identified on the furnished Example Control Drawings, each Sequence shall be broken down by individual control loops and shall include descriptions of both normal operating modes (running, shutdown, standby, etc.) and abnormal, emergency or safety related modes. Sequences shall include a description of all indication

instrumentation, alarm conditions, and automatic actions to be taken upon occurrence of alarm conditions. Each device referenced in the sequence shall be referred to by its unique tag identifier, with each component designator shown in parenthesis. Design setpoints shall be specified for each control loop and indicated as being adjustable. See furnished Example HVAC Control Drawings for the required level of detail and formatting.

The designer shall analyze every component of each system and write each Sequence of Operation to compliment the Functional Performance Checklists. The Sequence of Control on the project drawings shall be explicit and written to ensure that all the requirements of the "Functional Performance Test Checklists" can be accomplished.

Control Points Lists:

Control points lists, identifying each temperature control system input and output, shall be developed for each temperature control panel. See furnished Example HVAC Control Drawings for the required level of detail and formatting.

1.8.2 TECHNICAL SPECIFICATIONS

The submitted 60 percent technical guide specifications shall be updated, completely edited, and fully coordinated with the drawings to accurately and clearly identify the final product and installation requirements for the facility.

1.8.3 DESIGN ANALYSIS NARRATIVE

The Final Design Analysis Narrative shall include the information presented in the 60 percent submittal, shall be corrected to reflect changes in content made in response to review comments, and shall be expanded to reflect the completed design.

1.8.4 DESIGN ANALYSIS CALCULATIONS

The Final Design Analysis calculations shall include all the information presented in the 60 percent submittal, shall be corrected to reflect changes in content made in response to review comments, and shall be expanded to reflect the completed design. In addition, the following new calculations shall be provided:

a. Pipe sizing calculations for the chilled & heating hot water, plumbing, gas piping systems.

b. Chilled & heating hot water pump head calculations.

c. Chilled & heating hot water expansion tank sizing.

d. External static pressure calculations for all fans.

e. Control Valve CV calculations.

1.9 ELECTRICAL

1.9.1 Drawings

Drawing scale shall match architectural drawing requirements.

1.9.1.1 Interior Drawings

Drawings shall be complete and accurate in every detail and shall include arrangements and types of light fixtures, receptacles, switching, location of special features, necessary details, including legends, fixture schedule, panel schedules, one-line diagrams, layout or functional diagrams for each of the various systems, riser diagrams if applicable, estimated maximum demand for each panel and for entire building and any other relative information which will help clear up any and all questionable items on the plans or in the specifications toward the development of a set of plans which will be clear, concise and correct. Additional drawing requirements for specific equipment or systems have been included in subsequent paragraphs pertaining to the equipment or systems.

1.9.1.2 Floor Plans

All rooms must be identified by name and number. Plans must be legible. Plans shall be developed using the same scale and areas as the architectural floor plans. Separate floor plans must be provided for lighting, power, communications, and fire detection.

1.9.1.3 Diagrams

The power one-line diagram shall be on a dedicated sheet. The diagram should show ratings of major equipment including short circuit ratings. Power, communications diagrams, fire detection and telephone diagrams should be on separate sheets also.

1.9.1.4 Schedules

Provide panelboard and lighting fixture schedules. Panelboard schedules shall include the designation, location, mounting (flush or surface), number of phases and wires, voltage, ampacity and total connected and demand load. Indicate the trip rating, frame size, interrupting rating and number of poles for each circuit breaker in the panelboards. List the circuit number, circuit description and load for each branch circuit.

1.9.1.5 Exterior Drawings

Drawings shall be complete and accurate in all details and shall include the routing of all feeder and branch circuits.

1.9.2 Specifications

All specifications shall be completely edited and fully coordinated with the drawings to accurately and clearly identify the product, installation requirements, and testing methods for this facility.

1.9.3 Design Analysis Narrative

The text of the preliminary design analysis should be expanded to reflect the completed design. Calculations used to develop the design should be included. The document in its final form should conform in all applicable respects to the requirements of Section 01007 ELECTRICAL DESIGN REQUIREMENTS.

1.9.4 Design Analysis Calculations

Backup data shall be furnished to support basic design decisions related to sizing of major equipment and materials, selection of economic alternatives, performance of specific systems or equipment. Calculations may be performed by manual or computerized procedures. Use of standardized charts, curves, tables, graphs will generally be acceptable for portions of required calculations or in lieu of specific calculation procedures. Such data must be from a recognized source which is identified in the design analysis. If possible, a copy of applicable sheets or pages should be included with the calculations. For given equipment, the calculations must conform to requirements identified under subsequent paragraphs herein pertaining to the equipment.

1.9.4.1 Service

Sizing of building service.

1.9.4.2 Transformers

Sizing of all transformers. (Generally for dry type transformers, 1 or 2 samples of detailed calculations to identify the method are sufficient, if input data for remaining units can be derived from panel or feeder sizing data.)

1.9.4.3 Feeders

Sizing of feeders (One detailed sample calculation is sufficient to establish the procedure, remaining data can be in schedules, tables, etc.).

1.9.4.4 Panelboards

Sizing and loading of panelboards and distribution equipment.

1.9.4.5 Voltage drop determination

Provide voltage drop calculations in accordance with IEEE 241 to demonstrate that the voltage drop requirements of NFPA 70 are satisfied.

1.9.4.6 Illumination calculations

Data should identify target and calculated illumination levels for all rooms and areas. Calculations should be adjusted to compensate for special applications -- irregularly shaped rooms, open sides, ceiling obstructions (beams, ductwork), corridors, etc. If the lumen method is used for corridor calculations, the calculations should be performed using a module in which the length doesn't exceed 3 times the width (2:1 ratio preferred).

1.9.4.7 Short Circuit Evaluation

Calculate the fault current in accordance with IEEE 242 for each node in the electrical distribution system.

1.9.4.8 Protective Coordination Analysis

A protective coordination study shall be performed to show that the power system is selectively coordinated and is fully coordinated with the upstream loadcenter breakers. In addition the study shall include all existing and new devices in the Power Plant affected by the installation of the Consolidated Space Group Operations Facility. The protective

coordination / short circuit study shall be complete and approved by the government before any changes are made to the existing equipment.

1.9.4.9 Specialized Applications

Additional engineering backup should be included to address special requirements such as accommodation of nonlinear loads, harmonics analysis, energy studies, etc.

1.10 FIRE PROTECTION

1.10.1 DRAWINGS

Design will be an extension of the 60% submittal, incorporating all comments thereto and any revised criteria, as specifically directed by the District Office. All conflicts, lack of specific criteria, and/or direction, inconsistencies, ambiguities, and lack of thorough understanding of the nature and scope of work shall be resolved prior to starting final design work. The fire protection plans shall show the following: entire sprinkler system; fire detection system, to include control panels, remote annunciators, alarm notification devices, and each initiating device; fire walls; fire partitions; building separations; other fire protection features.

1.10.2 DESIGN ANALYSIS

The final design analysis will be an extension of the 60% design analysis and shall be complete for every item covered in the design and will include, but not be limited to, the following:

a. List of design criteria.

b. Design conditions.

c. Design calculations.

d. Complete description of system alarm zones.

e. Complete description of system sprinkler system.

f. Complete description of the building fire protection features.

g. Other pertinent information of value for future use in construction contract administration, substantiation of design methods, or permanent record shall be included.

1.10.3 TECHNICAL GUIDE SPECIFICATIONS

The following UFGS guide specifications shall be completely edited and fully coordinated with the drawings to accurately and clearly identify the product and installation requirements for the facility:

13930A	Wet-Pipe Sprinkler Systems, Fire Protection
16721A	Fire Detection System and Alarm System

All items identified in the specifications not required shall be marked for deletion in accordance with the requirements of Section 01332 SUBMITTALS DURING DESIGN. Those items of equipment, materials, or installation requirements that are required are not permitted to be modified or changed

from that presently shown. Government approval is required for the final submittal of these guide specs.

1.11 ENVIRONMENTAL PROTECTION COMPLIANCE

1.11.1 Guide Specifications

The Contractor shall be responsible for updating/revising Specification Section 01355 ENVIRONMENTAL PROTECTION. See Attachment No. [ ]. Any additional environmental compliances that may be required for this project shall be included. This section shall be included with the 100% Design Specifications rather it has any revisions or not. See 60% submittal requirements for additional information.

1.11.2 Design Analysis

The Contractor shall update/revise the chapter in the 60% Design Analysis entitled: "Environmental Protection Compliance".

1.11.3 Submittal of Environmental Approvals, Permit Application and Associated Documents

Any revisions that may be required to the permits and/or approvals which were submitted with the 60 percent submittals shall be submitted with final design submittals. If these submittals were not required to be submitted to the governing agencies for a permit or approval at 60% design, they shall be submitted with the 100% Design documents. Any additional approvals and/or Permits required, which were not previously submitted, shall be submitted to the Corps of Engineers with sufficient time for the permits to be obtained prior to construction commencing or with the final design submittals.

PART 2 NOT USED

PART 3 NOT USED

-- End of Section --

SECTION TABLE OF CONTENTS

DIVISION 01 - GENERAL REQUIREMENTS

SECTION 01355

ENVIRONMENTAL PROTECTION

10/00

PART 1 GENERAL

1.1 REFERENCES
1.2 DEFINITIONS
1.2.1 Environmental Pollution and Damage
1.2.2 Environmental Protection
1.2.3 Contractor Generated Hazardous Waste
1.2.4 Installation Pest Management Coordinator
1.2.5 Land Application for Discharge Water
1.2.6 Pesticide
1.2.7 Pests
1.2.8 Surface Discharge
1.2.9 Waters of the United States
1.2.10 Wetlands
1.3 GENERAL REQUIREMENTS
1.4 SUBCONTRACTORS
1.5 PAYMENT
1.6 CERTIFICATION REQUIREMENTS
1.7 ENVIRONMENTAL COORDINATION, PERMITS, NOTICES, REVIEWS AND/OR APPROVALS
1.7.1 Applications, Supporting Documents, and Fees
1.7.2 Consolidated Space Group Operations Facility at Schriever AFB's Environmental Permits, Notices, Reviews, and/or Approvalss
1.8 ENVIRONMENTAL PROTECTION PLAN
1.8.1 Compliance
1.8.2 Contents
1.8.3 Appendix
1.9 PROTECTION FEATURES
1.10 ENVIRONMENTAL ASSESSMENT OF CONTRACT DEVIATIONS
1.11 NOTIFICATION

PART 2 PRODUCTS (NOT USED)

PART 3 EXECUTION

3.1 LAND RESOURCES
3.1.1 Work Area Limits
3.1.2 Landscape
3.1.3 Erosion and Sediment Controls
3.1.4 Contractor Facilities and Work Areas
3.2 WATER RESOURCES
3.2.1 Wetlands
3.3 AIR RESOURCES
3.3.1 Particulates
3.3.2 Odors

3.3.3 Sound Intrusions
3.3.4 Burning
3.4 CHEMICAL MATERIALS MANAGEMENT AND WASTE DISPOSAL
3.4.1 Solid Wastes
3.4.2 Chemicals and Chemical Wastes
3.4.3 Contractor Generated Hazardous Wastes/Excess Hazardous Materials
3.4.4 Fuel and Lubricants
3.4.5 Waste Water
3.5 RECYCLING AND WASTE MINIMIZATION
3.6 NON-HAZARDOUS SOLID WASTE DIVERSION REPORT
3.7 HISTORICAL, ARCHAEOLOGICAL, AND CULTURAL RESOURCES
3.8 BIOLOGICAL RESOURCES
3.9 INTEGRATED PEST MANAGEMENT
3.9.1 Pesticide Delivery and Storage
3.9.2 Qualifications
3.9.3 Pesticide Handling Requirements
3.9.4 Application
3.10 PREVIOUSLY USED EQUIPMENT
3.11 MAINTENANCE OF POLLUTION FACILITIES
3.12 MILITARY MUNITIONS
3.13 TRAINING OF CONTRACTOR PERSONNEL
3.14 POST CONSTRUCTION CLEANUP

-- End of Section Table of Contents --

SECTION 01355

ENVIRONMENTAL PROTECTION
10/00

PART 1 GENERAL

1.1 REFERENCES

The publications listed below form a part of this specification to the extent referenced. The publications are referred to in the text by basic designation only.

U.S. AIR FORCE (USAF)

AFI 32-1053	(1999) Pest Management Program

U.S. NATIONAL ARCHIVES AND RECORDS ADMINISTRATION (NARA)

33 CFR 328	Definitions
40 CFR 68	Chemical Accident Prevention Provisions
40 CFR 152 - 186	Pesticide Programs
40 CFR 260	Hazardous Waste Management System: General
40 CFR 261	Identification and Listing of Hazardous Waste
40 CFR 262	Standards Applicable to Generators of Hazardous Waste
40 CFR 279	Standards for the Management of Used Oil
40 CFR 302	Designation, Reportable Quantities, and Notification
40 CFR 355	Emergency Planning and Notification
49 CFR 171 - 178	Hazardous Materials Regulations

ENGINEERING MANUALS (EM)

EM 385-1-1	(1996) U.S. Army Corps on Engineers Safety and Health Requirements Manual

SCHRIEVER AFB COLORADO

Haz Mat Plan	Hazardous Material Emergency Response Plan

US ARMY CORPS OF ENGINEERS TECHNICAL REPORT

WETLAND MANUAL	Corps of Engineers Wetlands Delineation

1.2 DEFINITIONS

1.2.1 Environmental Pollution and Damage

Environmental pollution and damage is the presence of chemical, physical, or biological elements or agents which adversely affect human health or welfare; unfavorably alter ecological balances of importance to human life; affect other species of importance to humankind; or degrade the environment aesthetically, culturally and/or historically.

1.2.2 Environmental Protection

Environmental protection is the prevention/control of pollution and habitat disruption that may occur to the environment during construction. The control of environmental pollution and damage requires consideration of land, water, and air; biological and cultural resources; and includes management of visual aesthetics; noise; solid, chemical, gaseous, and liquid waste; radiant energy and radioactive material as well as other pollutants.

1.2.3 Contractor Generated Hazardous Waste

Contractor generated hazardous waste means materials that, if abandoned or disposed of, may meet the definition of a hazardous waste. These waste streams would typically consist of material brought on site by the Contractor to execute work, but are not fully consumed during the course of construction. Examples include, but are not limited to, excess paint thinners (i.e. methyl ethyl ketone, toluene etc.), waste thinners,excess paints, excess solvents, waste solvents, and excess pesticides, and contaminated pesticide equipment rinse water.

1.2.4 Installation Pest Management Coordinator

Installation Pest Management Coordinator (IPMC) is the individual officially designated by the Installation Commander to oversee the Installation Pest Management Program and the Installation Pest Management Plan.

1.2.5 Land Application for Discharge Water

The term "Land Application" for discharge water implies that the Contractor shall discharge water at a rate which allows the water to percolate into the soil. No sheeting action, soil erosion, discharge into storm sewers, discharge into defined drainage areas, or discharge into the "waters of the United States" shall occur. Land Application shall be in compliance with all applicable Federal, State, and local laws and regulations.

1.2.6 Pesticide

Pesticide is defined as any substance or mixture of substances intended for preventing, destroying, repelling, or mitigating any pest, or intended for use as a plant regulator, defoliant or desiccant.

1.2.7 Pests

The term "pests" means arthropods, birds, rodents, nematodes, fungi, bacteria, viruses, algae, snails, marine borers, snakes, weeds and other

organisms (except for human or animal disease-causing organisms) that adversely affect readiness, military operations, or the well-being of personnel and animals; attack or damage real property, supplies, equipment, or vegetation; or are otherwise undesirable.

1.2.8 Surface Discharge

The term "Surface Discharge" implies that the water is discharged with possible sheeting action and subsequent soil erosion may occur. Waters that are surface discharged may terminate in drainage ditches, storm sewers,creeks, and/or "waters of the United States" and would require a permit to discharge water from the governing agency.

1.2.9 Waters of the United States

All waters which are under the jurisdiction of the Clean Water Act, as defined in 33 CFR 328.

1.2.10 Wetlands

Wetlands means those areas that are inundated or saturated by surface or ground water at a frequency and duration sufficient to support, and that under normal circumstances do support, a prevalence of vegetation typically adapted for life in saturated soil conditions. Wetlands generally include swamps, marshes, and bogs. Official determination of whether or not an area is classified as a wetland must be done in accordance with WETLAND MANUAL.

1.3 GENERAL REQUIREMENTS

The Contractor shall be responsible for ensuring that the project is constructed in full compliance with all applicable Federal, State, Local and Regional environmental laws and regulations. The Contractor shall minimize environmental pollution and damage that may occur as the result of construction operations. The environmental resources within the project boundaries and those affected outside the limits of permanent work shall be protected during the entire duration of this contract. The Contractor shall be responsible for any delays resulting from failure to comply with environmental laws and regulations.

1.4 SUBCONTRACTORS

The Contractor shall ensure compliance with this section by subcontractors.

1.5 PAYMENT

All costs associated with this section shall be included in the contract price. No separate payment will be made for work covered under this section. The Contractor shall be responsible for payment of fees associated with environmental permits, application, and/or notices obtained by the Contractor. The Contractor shall be responsible for payment of all fines/fees for violations or non-compliance with Federal, State, and local environmental laws and regulations.

1.6 CERTIFICATION REQUIREMENTS

An environmental agency may require design and construction documents to be certified by a Professional Engineer (PE) registered in the State of Colorado. The Contractor shall comply with the certification requirements

of the environmental regulatory agencies.

1.7 ENVIRONMENTAL COORDINATION, PERMITS, NOTICES, REVIEWS AND/OR APPROVALS

The Contractor shall be responsible for contacting the appropriate Federal, State, Regional, and local environmental agencies to identify all required environmental permits (construction and operating), notices, reviews, and approvals required for the project. Once the requirements are identified, the Contractor shall be responsible for coordinating the requirements with Schriever AFB's Environmental personnel and the Contracting Officer in regard to implementation for a Federal Facility project. The Contractor shall ensure that all coordination, permits, notices, reviews and/or approvals are completed with each applicable phase of the design prior to construction starting for that phase. The Contractor shall be responsible for any contract delays resulting from failure to obtain environmental permits, notices, reviews and/or approvals when required.

1.7.1 Applications, Supporting Documents, and Fees

The Contractor shall obtain and complete all environmental permit applications and notices including any documents required for a modification for an existing permit held by the Facility. The Contractor is responsible for preparing all supporting documents, including but not limited to engineering reports, emission surveys, diagrams, pollutant load calculations, etc. If, in lieu of permits, the governing agency requires review and approval of the design, the Contractor shall submit and obtain approval of the design and associated documents. The Contractor shall be responsible for all fees associated with the permits, applications, reviews, approvals, and notices.

1.7.2 Consolidated Space Group Operations Facility at Schriever AFB's Environmental Permits, Notices, Reviews, and/or Approvalss

The following is a listing of permits, notices, reviews, and/or approvals which **may be** required for this project. This listing and requirements are not to be considered all-inclusive by the Contractor, but is provided as information to be used in successfully accomplishing the environmental compliances.

a. In the State of Colorado, **EPA** has authority for the National Pollutant Discharge Elimination System (NPDES) on **Federal Facilities**. **If** construction activities results in the disturbance of 1 acre of land or more, coverage under the EPA Storm Water General Permit For Construction Activities (Colorado Permit No. COR10*##F) is required. (NOTE: The requirement changed from 5 acres to 1 acre of disturbed land on 10 March 2003.) The Contractor and the Omaha District Corps of Engineers shall be co-permittees. The Contractor shall be responsible for editing and applying Specification Section 01565NPDES PERMIT REQUIREMENTS FOR STORM WATER DISCHARGES FROM CONSTRUCTION SITES.

b. A State of Colorado Air Pollution Emission Notice (APEN) for Fugitive Dust Permit for Land Development is required, if construction disturbs surface areas of more than 25 contiguous acres **or** if surface areas of more than 1 acre are to remain disturbed more than six months. The Colorado Department of Public Health and Environment (CDPHE), Division Air Quality issues the permit. The Contractor shall be the permittee and the permit is required prior to any construction starting on the project

site. The submittal package to CDPHE shall include a completed Air Pollution Emission Notice (APEN), a Land Disturbance Dust Control Plan, the grading plan, the location plan, and the application fee. The CDPHE requires a minimum of 30 days for review of the package. Prior to issuing the Construction Permit, CDPHE requires the permittee to pay the cost of the review in addition to the application fee.

c. An El Paso County Construction Activities Permit will be required **instead** of the State of Colorado Fugitive Dust Permit, **if** the land disturbance will be greater than 1 acre but less than 25 acres **and** will not exceed six months in duration.

d. The Colorado Department of Public Health and Environment (CDPHE), Air Quality Division, may require an Air Pollutant Emission Notice (APEN) and a Permit-to-Construct for a new stationary source emitting an air pollutant. The Contractor shall review the State of Colorado Air Quality regulations for applicability of an APEN and the air permit requirements as well as the Colorado State Standards of Performance for New Fuel Burning Equipment to determine if an APEN and/or a Permit-to-Construct is required. In addition, the Contractor shall be responsible for coordination with Schriever AFB Environmental Flight for compliance with the Facilities Air Permit and shall coordinated all requirements with the Contracting Officer.

e. The Colorado Water Quality Control Act and Regulations promulgated thereunder requires that the construction or expansion of any domestic wastewater treatment works with a design capacity of pumping more than two thousand gallons per day have approval of the site location and of the design of the construction or expansion. The Contractor shall be responsible for obtaining the approval of the site and the design of any expansion and/or lift stations that meets these requirement. The Contractor shall be responsible for completion of application, associated design documents, and all requirements for the site approval process in accordance with the State requirements. The Contractor shall be responsible for payment of all fees associated with the review and approval. In addition, the Contractor shall be responsible for coordination of the site approval process with Schriever AFB's Environmental Flight and the approving agencies. The Contractor shall attend all local government board meetings required by the Pikes Peak Area Council of Governments for approval. The site approval process may require up to 4-5 months and should be started as soon as the location of the lift station and the design calculations are available. A Professional Engineer registered in the State of Colorado is required to certify the design documents and to certify that the expansion and/or lift station was constructed in accordance with the approved design.

f. Coordination and Notification may be required prior to discharge of hydrostatic test water and disinfection water to the sanitary sewer. The Contractor shall be responsible for coordination with Schriever AFB and the Contracting Officer. The discharge shall be in accordance with all Federal, State, and local laws and regulations.

1.8 ENVIRONMENTAL PROTECTION PLAN

During the initial design phase, the Contractor shall submit an Environmental Protection Plan for compliance review and acceptance by the Contracting Officer. For each additional submittal phases, the plan shall be updated and submitted for compliance review and acceptance by the Contracting Officer. Prior to construction, the Contractor shall meet with the Contracting Officer for the purpose of discussing the implementation of the environmental plan, possible subsequent additions and revisions to the plan including any reporting requirements, and methods for administration of the Contractor's environmental plans. During Construction, the Contractor shall maintain the current version of the Environmental Protection Plan on the project site for review by interested parties.

1.8.1 Compliance

No requirement in this Section shall be construed as relieving the Contractor of any applicable Federal, State, and local environmental protection laws and regulations. During Construction, the Contractor shall be responsible for identifying, submitting for compliance review, and implementing any additional requirements to be included in the Environmental Protection Plan.

1.8.2 Contents

The environmental protection plan shall include, but shall not be limited to, the following:

a. Name(s) of person(s) within the Contractor's organization who is(are) responsible for ensuring adherence to the Environmental Protection Plan.

b. Name(s) and qualifications of person(s) responsible for manifesting hazardous waste to be removed from the site, if applicable.

c. Name(s) and qualifications of person(s) responsible for training the Contractor's environmental protection personnel.

d. Description of the Contractor's environmental protection personnel training program.

e. An erosion and sediment control plan which identifies the type and location of the erosion and sediment controls to be provided. The plan shall include monitoring and reporting requirements to assure that the control measures are in compliance with the erosion and sediment control plan, Federal, State, and local laws and regulations. A Storm Water Pollution Prevention Plan (SWPPP) may be substituted for this plan.

f. Drawings showing locations of proposed temporary excavations or embankments for haul roads, stream crossings, material storage areas, structures, sanitary facilities, and stockpiles of excess or spoil materials including methods to control runoff and to contain materials on the site.

g. Traffic control plans including measures to reduce erosion of temporary roadbeds by construction traffic, especially during wet weather. Plan shall include measures to minimize the amount of mud transported onto paved public roads by vehicles or runoff.

h. Work area plan showing the proposed activity in each portion of the

area and identifying the areas of limited use or nonuse. Plan should include measures for marking the limits of use areas including methods for protection of features to be preserved within authorized work areas.

i. Drawing showing the location of borrow areas.

j. The Spill Control plan shall include the procedures, instructions, and reports to be used in the event of an unforeseen spill of a substance regulated by 40 CFR 68, 40 CFR 302, 40 CFR 355, and/or regulated under State or Local laws and regulations. The Spill Control Plan supplements the requirements of EM 385-1-1 and Schriever AFB's Haz Mat Plan. The Hazardous Material Emergency Response Plan may be reviewed at the Environmental Flight office at Schriever AFB. This plan shall include as a minimum:

1. The name of the individual who will report any spills or hazardous substance releases and who will follow up with complete documentation. This individual shall immediately notify the Contracting Officer, Schriever AFB's Fire Department, and Schriever AFB's Environmental Flight in addition to the legally required Federal, State, and local reporting channels (including the National Response Center 1-800-424-8802) if a reportable quantity is released to the environment. The plan shall contain a list of the required reporting channels and telephone numbers.

2. The name and qualifications of the individual who will be responsible for implementing and supervising the containment and cleanup.

3. Training requirements for Contractor's personnel and methods of accomplishing the training.

4. A list of materials and equipment to be immediately available at the job site, tailored to cleanup work of the potential hazard(s) identified.

5. The names and locations of suppliers of containment materials and locations of additional fuel oil recovery, cleanup, restoration, and material-placement equipment available in case of an unforeseen spill emergency.

6. The methods and procedures to be used for expeditious contaminant cleanup.

k. A non-hazardous solid waste disposal plan identifying methods and locations for solid waste disposal including clearing debris. The plan shall include schedules for disposal. The Contractor shall identify any subcontractors responsible for the transportation and disposal of solid waste. Licenses or permits shall be submitted for solid waste disposal sites that are not a commercial operating facility. Evidence of the disposal facility's acceptance of the solid waste shall be attached to this plan during the construction. The Contractor shall attach a copy of each of the Non-hazardous Solid Waste Diversion Reports to the disposal plan. The report shall be submitted on the first working day after the first quarter that non-hazardous solid waste has been disposed and/or diverted and shall be for the previous quarter (e.g. the first working day of January, April, July, and October). The report shall indicate the total amount of waste generated and total amount of waste diverted in cubic yards or tons

along with the percent that was diverted.

l. A recycling and solid waste minimization plan with a list of measures to reduce consumption of energy and natural resources. The plan shall detail the Contractor's actions to comply with and to participate in Federal, State, Regional, and local government sponsored recycling programs to reduce the volume of solid waste at the source.

m. An air pollution control plan detailing provisions to assure that dust, debris, materials, trash, etc., do not become air borne and travel off the project site. If a State of Colorado Fugitive Dust permit or an El Paso County Construction Activity Permit is required, a copy of any plans and/or permits shall be included as an attachment to the plan.

n. A contaminant prevention plan that: identifies potentially hazardous substances to be used on the job site; identifies the intended actions to prevent introduction of such materials into the air, water, or ground; and details provisions for compliance with Federal, State, and local laws and regulations for storage and handling of these materials. In accordance with EM 385-1-1, a copy of the Material Safety Data Sheets (MSDS) and the maximum quantity of each hazardous material to be on site at any given time shall be included in the contaminant prevention plan. As new hazardous materials are brought on site or removed from the site, the plan shall be updated. Copies of all correspondence, inventories, notifications, etc. to Schriever AFB's Hazardous Materials Pharmacy, 50 CES/CEV, and the Contracting Officer shall be included with the plan.

o. A waste water management plan that identifies the methods and procedures for management and/or discharge of waste waters which are directly derived from construction activities, such as concrete curing water, clean-up water, dewatering of ground water, disinfection water, hydrostatic test water, and water used in flushing of lines. If a settling/retention pond is required, the plan shall include the design of the pond including drawings, removal plan, and testing requirements for possible pollutants. If land application will be the method of disposal for the waste water, the plan shall include a sketch showing the location for land application along with a description of the pretreatment methods to be implemented. If disposal is to a sanitary sewer, the plan shall include documentation that the Waste Water Treatment Plant Operator has approved the flow rate, volume, and type of discharge.

p. A historical, archaeological, cultural resources biological resources and wetlands plan that defines procedures for identifying and protecting historical, archaeological, cultural resources, biological resources and wetlands known to be on the project site: and/or identifies procedures to be followed if historical archaeological, cultural resources, biological resources and wetlands not previously known to be on site or in the area are discovered during construction. The plan shall include methods to assure the protection of known or discovered resources and shall identify lines of communication between Contractor personnel and the Contracting Officer.

q. A pesticide treatment plan shall be included and updated, as information becomes available. The plan shall include: sequence of treatment, dates, times, locations, pesticide trade name, EPA registration numbers, authorized uses, chemical composition,

formulation, original and applied concentration, application rates of active ingredient (i.e. pounds of active ingredient applied), equipment used for application and calibration of equipment. The Contractor is responsible for Federal, State, Regional and Local pest management record keeping and reporting requirements as well as any additional Installation specific requirements. The Contractor shall follow AFI 32-1053 Sections 3.4.13 and 3.4.14 for data required to be reported to the Installation.

1.8.3 Appendix

Copies of all environmental permits, permit application packages, approvals to construct, notifications, certifications, reports, and termination documents shall be attached, as an appendix, to the Environmental Protection Plan.

1.9 PROTECTION FEATURES

This paragraph supplements the Contract Clause PROTECTION OF EXISTING VEGETATION, STRUCTURES, EQUIPMENT, UTILITIES, AND IMPROVEMENTS. Prior to start of any on site construction activities, the Contractor and the Contracting Officer shall make a joint condition survey. Immediately following the survey, the Contractor shall prepare a brief report including a plan describing the features requiring protection under the provisions of the Contract Clauses, which are not specifically identified on the drawings as environmental features requiring protection along with the condition of trees, shrubs and grassed areas immediately adjacent to the site of work and adjacent to the Contractor's assigned storage area and access route(s), as applicable. This survey report shall be signed by both the the Contractor and the Contracting Officer upon mutual agreement as to its accuracy and completeness. The Contractor shall protect those environmental features included in the survey report and any indicated on the drawings, regardless of interference which their preservation may cause to the Contractor's work under the contract.

1.10 ENVIRONMENTAL ASSESSMENT OF CONTRACT DEVIATIONS

Any deviations, requested by the Contractor, from the drawings,plans and specifications which may have an environmental impact will be subject to approval by the Contracting Officer and may require an extended review, processing, and approval time. The Contracting Officer reserves the right to disapprove alternate methods, even if they are more cost effective, if the Contracting Officer determines that the proposed alternate method will have an adverse environmental impact.

1.11 NOTIFICATION

The Contracting Officer will notify the Contractor in writing of any observed noncompliance with Federal, State or local environmental laws or regulations, permits, and other elements of the Contractor's Environmental Protection plan. The Contractor shall, after receipt of such notice, inform the Contracting Officer of the proposed corrective action and take such action when approved by the Contracting Officer. The Contracting Officer may issue an order stopping all or part of the work until satisfactory corrective action has been taken. No time extensions shall be granted or equitable adjustments allowed to the Contractor for any such suspensions. This is in addition to any other actions the Contracting Officer may take under the contract, or in accordance with the Federal Acquisition Regulation or Federal Law.

PART 2 PRODUCTS (NOT USED)

PART 3 EXECUTION

3.1 LAND RESOURCES

The Contractor shall confine all activities to areas defined by the drawings and specifications. Prior to the beginning of any construction, the Contractor shall identify any land resources to be preserved within the work area. Except in areas indicated on the drawings or specified to be cleared, the Contractor shall not remove, cut, deface, injure, or destroy land resources including trees, shrubs, vines, grasses, topsoil, and land forms without approval. No ropes, cables, or guys shall be fastened to or attached to any trees for anchorage unless specifically authorized. The Contractor shall provide effective protection for land and vegetation resources at all times as defined in the following subparagraphs. Stone, soil, or other materials displaced into uncleared areas shall be removed by the Contractor.

3.1.1 Work Area Limits

Prior to commencing construction activities, the Contractor shall mark the areas that need not be disturbed under this contract. Isolated areas within the general work area which are not to be disturbed shall be marked or fenced. Monuments and markers shall be protected before construction operations commence. Where construction operations are to be conducted during darkness, any markers shall be visible in the dark. The Contractor's personnel shall be knowledgeable of the purpose for marking and/or protecting particular objects.

3.1.2 Landscape

Trees, shrubs, vines, grasses, land forms and other landscape features indicated and defined on the drawings to be preserved shall be clearly identified by marking, fencing, or wrapping with boards, or any other approved techniques. The Contractor shall restore landscape features damaged or destroyed during construction operations outside the limits of the approved work area.

3.1.3 Erosion and Sediment Controls

The Contractor shall be responsible for providing erosion and sediment control measures in accordance with Federal, State, and local laws and regulations. The erosion and sediment controls selected and maintained by the Contractor shall be such that water quality standards are not violated as a result of the Contractor's construction activities. The area of bare soil exposed at any one time by construction operations should be kept to a minimum. The Contractor shall construct or install temporary and permanent erosion and sediment control best management practices (BMPs). BMPs may include, but not be limited to, vegetation cover, silt fences, stream bank stabilization, slope stabilization, silt fences, construction of terraces, interceptor channels, sediment traps, inlet and outfall protection, diversion channels, and sedimentation basins.

3.1.4 Contractor Facilities and Work Areas

The Contractor's field offices, staging areas, stockpile storage, and temporary buildings shall be placed in areas designated on the drawings or

as directed by the Contracting Officer. Temporary movement or relocation of Contractor facilities shall be made only when approved. Erosion and sediment controls shall be provided for on-site borrow and spoil areas to prevent sediment from entering nearby waters. Temporary excavation and embankments for plant and/or work areas shall be controlled to protect adjacent areas.

3.2 WATER RESOURCES

The Contractor shall monitor construction activities to prevent pollution of surface and ground waters. Toxic or hazardous chemicals shall not be applied to soil or vegetation unless otherwise indicated. All water areas affected by construction activities shall be monitored by the Contractor. For construction activities immediately adjacent to impaired surface waters, the Contractor shall be capable of quantifying sediment or pollutant loading to that surface water when required by State or Federally issued Clean Water Act permits.

3.2.1 Wetlands

The Contractor shall not enter, disturb, destroy, or allow discharge of contaminants into any wetlands.

3.3 AIR RESOURCES

Equipment operation, activities, or processes performed by the Contractor shall be in accordance with all Federal and State air emission and performance laws and standards.

3.3.1 Particulates

Dust particles; aerosols and gaseous by-products from construction activities; and processing and preparation of materials, such as from asphalt batch plants; shall be controlled at all times, including weekends, holidays and hours when work is not in progress. The Contractor shall maintain excavations, stockpiles, haul roads, permanent and temporary access roads, plant sites, spoil areas, borrow areas, and other work areas within or outside the project boundaries free from particulates which would cause the Federal, State, and local air pollution standards to be exceeded or which would cause a hazard or a nuisance. Sprinkling, chemical treatment of an approved type, baghouse, scrubbers, electrostatic precipitators or other methods will be permitted to control particulates in the work area. Sprinkling, to be efficient, must be repeated to keep the disturbed area damp at all times. The Contractor must have sufficient, competent equipment available to accomplish these tasks. Particulate control shall be performed as the work proceeds and whenever a particulate nuisance or hazard occurs. The Contractor shall comply with all State and local visibility regulations.

3.3.2 Odors

Odors from construction activities shall be controlled at all times. The odors shall not cause a health hazard and shall be in compliance with State regulations and/or local ordinances.

3.3.3 Sound Intrusions

The Contractor shall keep construction activities under surveillance and control to minimize environment damage by noise. The Contractor shall

comply with the provisions of the State of Colorado's rules.

3.3.4 Burning

Burning shall be prohibited on the Government premises.

3.4 CHEMICAL MATERIALS MANAGEMENT AND WASTE DISPOSAL

Disposal of wastes shall be as directed below, unless otherwise specified in other sections and/or shown on the drawings.

3.4.1 Solid Wastes

Solid wastes (excluding clearing debris) shall be placed in containers which are emptied on a regular schedule. Handling, storage, and disposal shall be conducted to prevent contamination. Segregation measures shall be employed so that no hazardous or toxic waste will become co-mingled with solid waste. The Contractor shall transport solid waste off Government property and dispose of it in compliance with Federal, State, and local requirements for solid waste disposal. A Subtitle D RCRA permitted landfill shall be the minimum acceptable off-site solid waste disposal option. The Contractor shall verify that the selected transporters and disposal facilities have the necessary permits and licenses to operate.

3.4.2 Chemicals and Chemical Wastes

Chemicals shall be dispensed ensuring no spillage to the ground or water. Periodic inspections of dispensing areas to identify leakage and initiate corrective action shall be performed and documented. This documentation will be periodically reviewed by the Government. Chemical waste shall be collected in corrosion resistant, compatible containers. Collection drums shall be monitored and removed to a staging or storage area when contents are within 6 inches of the top. Wastes shall be classified, managed, stored, and disposed of in accordance with Federal, State, and local laws and regulations.

3.4.3 Contractor Generated Hazardous Wastes/Excess Hazardous Materials

Hazardous wastes are defined in 40 CFR 261, or are as defined by applicable State and local regulations. Hazardous materials are defined in 49 CFR 171 - 178. Prior to generation of a hazardous waste stream, the Contractor shall be responsible for coordination with Schriever AFB's 50 CES/CEV for specific requirements for management and storage of hazardous waste. Regardless of the Contractor's hazardous waste activity generator status, the Contractor shall be responsible for compliance with Schriever AFB's requirements. The Contractor shall, at a minimum, manage and store hazardous waste in compliance with 40 CFR 262 and shall manage and store hazardous waste in accordance with the Schriever's Haz Mat Plan. The Contractor shall take sufficient measures to prevent spillage of hazardous and toxic materials during dispensing. The Contractor shall segregate hazardous waste from other materials and wastes, shall protect it from the weather by placing it in a safe covered location, and shall take precautionary measures such as berming or other appropriate measures against accidental spillage. The Contractor shall be responsible for storage, describing, packaging, labeling, marking, and placarding of hazardous waste and hazardous material in accordance with 49 CFR 171 - 178, State, and local laws and regulations. The Contractor shall transport Contractor generated hazardous waste off Government property within 60 days in accordance with the Environmental Protection Agency and the Department

of Transportation laws and regulations. The Contractor shall dispose of hazardous waste in compliance with Federal, State and local laws and regulations. Spills of hazardous or toxic materials shall be immediately reported to the Contracting Officer and Schriever AFB Environmental Office.. Cleanup and cleanup costs due to spills shall be the Contractor's responsibility.

3.4.4 Fuel and Lubricants

Storage, fueling and lubrication of equipment and motor vehicles shall be conducted in a manner that affords the maximum protection against spill and evaporation. Fuel, lubricants and oil shall be managed and stored in accordance with all Federal, State, Regional, and local laws and regulations. Used lubricants and used oil to be discarded shall be stored in marked corrosion-resistant containers and recycled or disposed in accordance with 40 CFR 279, State, and local laws and regulations. There shall be no storage of fuel on the project site. Fuel must be brought to the project site each day that work is performed.

3.4.5 Waste Water

Disposal of waste water shall be as specified below.

a. Waste water from construction activities, such as on site material processing, concrete curing, foundation and concrete clean-up, water used in concrete trucks, forms, etc. shall not be allowed to enter water ways or to be discharged prior to being treated to remove pollutants. The Contractor shall dispose of the construction related waste water off-Government property in accordance with all Federal, State, Regional and Local laws and regulations or by collecting and placing it in a retention pond where suspended material can be settled out and/or the water can evaporate to separate pollutants from the water. The site for the retention pond shall be coordinated and approved with the Contracting Officer. The residue left in the pond prior to completion of the project shall be removed, tested, and disposed off-Government property in accordance with Federal, State, and local laws and regulations. The area shall be backfilled to the original grade, top-soiled and seeded/sodded.

b. Water generated from dewatering activities shall be land apply on site in accordance with both the Federal and the State of Colorado laws and regulations for land application.

c. Water generated from the flushing of lines after disinfection or disinfection in conjunction with hydrostatic testing shall be discharged into the sanitary sewer with prior approval and/or notification to the Waste Water Treatment Plant's Operator.

3.5 RECYCLING AND WASTE MINIMIZATION

The Contractor shall participate in State and local government sponsored recycling programs. The Contractor is further encouraged to minimize solid waste generation throughout the duration of the project.

3.6 NON-HAZARDOUS SOLID WASTE DIVERSION REPORT

The Contractor shall maintain an inventory of non-hazardous solid waste diversion and disposal of construction and demolition debris. The

Contractor shall submit a report to Schriever AFB Environmental Office through the Contracting Officer on the first working day after each fiscal year quarter, starting the first quarter that non-hazardous solid waste has been generated. The following shall be included in the report:

a. Construction and Demolition (C&D) Debris Disposed = _____ in cubic yards or tons, as appropriate.

b. Construction and Demolition (C&D) Debris Recycled = _____ in cubic yards or tons, as appropriate.

c. Total C&D Debris Generated = _____ in cubic yards or tons, as appropriate.

d. Waste Sent to Waste-To-Energy Incineration Plant (This amount should not be included in the recycled amount) = _____ in cubic yards or tons, as appropriate.

3.7 HISTORICAL, ARCHAEOLOGICAL, AND CULTURAL RESOURCES

If during excavation or other construction activities any previously unidentified or unanticipated historical, archaeological, and cultural resources are discovered or found, all activities that may damage or alter such resources shall be temporarily suspended. Resources covered by this paragraph include but are not limited to: any human skeletal remains or burials; artifacts; shell, midden, bone, charcoal, or other deposits; rock or coral alignments, pavings, wall, or other constructed features; and any indication of agricultural or other human historical activities. Upon such discovery or find, the Contractor shall immediately notify the Contracting Officer so that the appropriate authorities may be notified and a determination made as to their significance and what, if any, special disposition of the finds should be made. The Contractor shall cease all activities that may result in impact to or the destruction of these resources. The Contractor shall secure the area and prevent employees or other persons from trespassing on, removing, or otherwise disturbing such resources.

3.8 BIOLOGICAL RESOURCES

The Contractor shall minimize interference with, disturbance to, and damage to fish, wildlife, and plants including their habitat. The Contractor shall be responsible for the protection of threatened and endangered animal and plant species including their habitat in accordance with Federal, State, Regional, and local laws and regulations.

3.9 INTEGRATED PEST MANAGEMENT

In order to minimize impacts to existing fauna and flora, the Contractor, through the Contracting Officer, shall coordinate with the Installation Pest Management Coordinator (IPMC) at the earliest possible time prior to pesticide application. The Contractor shall discuss integrated pest management strategies with the IPMC and receive concurrence from the IPMC through the COR prior to the application of any pesticide associated with these specifications. Installation Pest Management personnel shall be given the opportunity to be present at all meetings concerning treatment measures for pest or disease control and during application of the pesticide. The use and management of pesticides are regulated under 40 CFR 152 - 186.

3.9.1 Pesticide Delivery and Storage

Pesticides shall be delivered to the site in the original, unopened containers bearing legible labels indicating the EPA registration number and the manufacturer's registered uses. Pesticides shall be stored according to manufacturer's instructions and under lock and key when unattended.

3.9.2 Qualifications

For the application of pesticides, the Contractor shall use the services of a subcontractor whose principal business is pest control. The subcontractor shall be licensed and certified in the state where the work is to be performed.

3.9.3 Pesticide Handling Requirements

The Contractor shall formulate, treat with, and dispose of pesticides and associated containers in accordance with label directions and shall use the clothing and personal protective equipment specified on the labeling for use during all phases of the application. Material Safety Data Sheets (MSDS)shall be available for all pesticide products.

3.9.4 Application

Pesticides shall be applied by a State Certified Pesticide Applicator in accordance with EPA label restrictions and recommendation. The Certified Applicator shall wear clothing and personal protective equipment as specified on the pesticide label. Water used for formulating shall only come from locations designated by the Contracting Officer. The Contractor shall not allow the equipment to overflow. Prior to application of pesticide, all equipment shall be inspected for leaks, clogging, wear, or damage and shall be repaired prior to being used.

3.10 PREVIOUSLY USED EQUIPMENT

The Contractor shall clean all previously used construction equipment prior to bringing it onto the project site. The Contractor shall ensure that the equipment is free from soil residuals, egg deposits from plant pests, noxious weeds, and plant seeds. The Contractor shall consult with the USDA jurisdictional office for additional cleaning requirements.

3.11 MAINTENANCE OF POLLUTION FACILITIES

The Contractor shall maintain permanent and temporary pollution control facilities and devices for the duration of the contract or for that length of time construction activities create the particular pollutant.

3.12 MILITARY MUNITIONS

In the event the Contractor discovers or uncovers military munitions as defined in 40 CFR 260, the Contractor shall immediately stop work in that area and immediately inform the Contracting Officer.

3.13 TRAINING OF CONTRACTOR PERSONNEL

The Contractor's personnel shall be trained in all phases of environmental protection and pollution control. The Contractor shall conduct environmental protection/pollution control meetings for all Contractor

personnel prior to commencing construction activities. The Contract shall document the attendees and dates of attendance at all meetings. Additional meetings shall be conducted for new personnel and when site conditions change. The training and meeting agenda shall include: methods of detecting and avoiding pollution; familiarization with statutory and contractual pollution standards; installation and care of devices, vegetative covers, and instruments required for monitoring purposes to ensure adequate and continuous environmental protection/pollution control; anticipated hazardous or toxic chemicals or wastes, and other regulated contaminants; recognition and protection of archaeological sites, artifacts, wetlands, and endangered species and their habitat that are known to be in the area.

3.14 POST CONSTRUCTION CLEANUP

The Contractor shall clean up all areas used for construction in accordance with Contract Clause: "Cleaning Up". The Contractor shall, unless otherwise instructed in writing by the Contracting Officer, obliterate all signs of temporary construction facilities such as haul roads, work area, structures, foundations of temporary structures, stockpiles of excess or waste materials, and other vestiges of construction prior to final acceptance of the work. The disturbed area shall be graded, filled and the entire area seeded unless otherwise indicated. -- End of Section --

SECTION TABLE OF CONTENTS

DIVISION 01 - GENERAL REQUIREMENTS

SECTION 01400

SPECIAL SAFETY REQUIREMENTS

05/00 Rev 12/01

PART 1 GENERAL

1.1 REFERENCES
1.2 SUMMARY
1.2.1 General
1.3 PRECONSTRUCTION CONFERENCE
1.4 SUBMITTALS
1.5 ACCIDENT PREVENTION PLAN
1.5.1 Requirements
1.5.1.1 Responsible Individual(s)
1.5.1.2 Subcontractor Supervision
1.5.1.3 Indoctrination of New Employees
1.5.1.4 Tool Box Safety Meetings
1.5.1.5 Fire Prevention and Protection
1.5.1.6 Housekeeping
1.5.1.7 Mechanical Equipment Inspection
1.5.1.8 First Aid and Medical Facilities
1.5.1.9 Sanitation
1.5.1.10 Safety Promotions
1.5.1.11 Accident Reporting
1.5.1.12 Job Hazard Analysis
1.6 RADIOLOGICAL EQUIPMENT
1.7 EXCAVATION AND TRENCHING

PART 2 PRODUCTS (NOT APPLICABLE)

PART 3 EXECUTION (NOT APPLICABLE)

-- End of Section Table of Contents --

SECTION 01400

SPECIAL SAFETY REQUIREMENTS
05/00 Rev 12/01

PART 1 GENERAL

1.1 REFERENCES

The publications listed below form a part of this specification to the extent referenced. The publications are referred to in the text by basic designation only.

CODE OF FEDERAL REGULATIONS (CFR)

29 CFR 1910	Occupational Safety and Health Standards
29 CFR 1926	Safety and Health Regulations for Construction

ENGINEERING MANUALS (EM)

EM 385-1-1	(1996 and Changes) Safety and Health Requirements Manual

1.2 SUMMARY

1.2.1 General

This section provides guidelines for preparation of accident prevention plans, and to implement the accident prevention clause (this specification) and EM 385-1-1, Safety and Health Requirements Manual. The U.S. Army Corps of Engineers Safety and Health Requirements Manual, EM 385-1-1 is available from U.S. Government bookstores operated by the Government Printing Office [and a copy is included on the CD-ROM issued with this solicitation.] Changes to EM 385-1-1 applicable to this contract include only those revisions posted at the following website (all revisions up to the time this solicitation is issued): http://www.hq.usace.army.mil/soh/hqusace_soh.htm ("Changes to EM"). U.S. Government bookstores are located in most major cities including Milwaukee, Chicago, Kansas City, Denver, and Pueblo, Colorado.

1.3 PRECONSTRUCTION CONFERENCE

See Contract Clause "PRECONSTRUCTION CONFERENCE". A preconstruction conference will be scheduled prior to beginning of site work. Requirements relative to planning and administration of the overall safety program will be discussed.

1.4 SUBMITTALS

Government approval is required for submittals with a "G" designation; submittals not having a "G" designation are for information only. When used, a designation following the "G" designation identifies the office that will review the submittal for the Government. The following shall be

submitted in accordance with Section 01330SUBMITTAL PROCEDURES:

SD-01 Preconstruction Submittals

Accident Prevention Plan; G-AO

The written site-specific Accident Prevention Plan.

1.5 ACCIDENT PREVENTION PLAN

The Contractor shall submit, prior to the start of on site construction activity, a proposed accident prevention plan which shall be the accident prevention policy to be followed by all of the Contractor's and subcontractor's personnel and supervisory staff during performance of the work.

1.5.1 Requirements

The proposed plan shall be developed after a careful analysis of the work involved and shall be tailored specifically to the conditions of this project. The Contractor's accident prevention plan shall contain, as a minimum, the following general information or procedures for the activity indicated. The Contractor shall submit his plan for review and acceptance prior to commencing work.

1.5.1.1 Responsible Individual(s)

The Contractor shall designate an onsite employee as the individual responsible for insuring the accident prevention plan is implemented and enforced.

1.5.1.2 Subcontractor Supervision

Explain procedures to assure that subcontractor(s) fully comply with the accident prevention plan.

1.5.1.3 Indoctrination of New Employees

The plan shall include provisions for advising workers of the purpose of the accident prevention plan, specific hazards on the job and precautions to be taken, emergency procedures, information concerning tool box safety meetings, required protective equipment, cleanup rules and location of company safety rules (posting or handout).

1.5.1.4 Tool Box Safety Meetings

Hold weekly "Tool Box" safety meetings. Timely safety subjects shall be determined by a responsible individual. Employees will be informed of time, location, who will conduct, and subject. Identify procedures for including subcontractors. The Contractor shall provide a copy of the Weekly Tool Box Meeting and Monthly Supervisor's Safety Meeting to the Contracting Officer.

1.5.1.5 Fire Prevention and Protection

Identify source of fire protection. Insure adequate fire extinguishers, water barrels, or other fire-fighting equipment is located on site. Explain prevention activities to include storage areas and special hazards such as welding and use of flammable liquids, and other special hazards.

1.5.1.6 Housekeeping

Daily cleanup of all debris and waste materials is required. Adequate disposal containers should be placed strategically around the site. Debris shall be removed on a regular basis. Explain procedures that include use of barrels, dumpsters, trash chutes, etc.

1.5.1.7 Mechanical Equipment Inspection

All mechanical equipment (trucks, cranes, forklifts, backhoes, graders, etc.) shall be inspected prior to use and at fixed intervals throughout the life of the contract. Explain how inspections will be accomplished (frequency, by whom, and records to be kept).

1.5.1.8 First Aid and Medical Facilities

First aid facilities shall be made available on the job site. Arrangements for emergency medical attention shall be made prior to start of work. All emergency numbers (doctor, hospital, ambulance, fire department) shall be posted at the project superintendent's office.

1.5.1.9 Sanitation

Include provisions for toilet facilities, drinking water and washing facilities. A sufficient number of toilet facilities as specified in EM 385-1-1 shall be provided unless permission is granted to use existing facilities (portable chemical are authorized). Insure safe drinking water and individual cups are available. For the projects where corrosive or toxic materials are used, separate washing facilities are required.

1.5.1.10 Safety Promotions

The Contractor shall promote accident prevention. Identify method (posters, awards etc.).

1.5.1.11 Accident Reporting

All accidents (employee injuries, vehicle, building, or equipment damage etc.) regardless of their severity, shall be reported to the onsite government representative or to the area engineer, who in turn will advise the Contractor of forms to be submitted and timeframes.

1.5.1.12 Job Hazard Analysis

When job situations change and it is necessary to alter safety requirements, a Job Hazard Analysis will be accomplished, documented, and added as an addendum to the Accident Prevention Plan. Each Job Hazard Analysis shall include, but not be limited to, a description of the work, probable hazards related to that work and positive precautionary measures to be taken to reduce or eliminate each hazard. An example of changing situations may be new subcontractors performing work such as earth moving, trenching, concrete work, roofing, electrical, masonry etc. The onsite government representative will determine the format and amount of detail required of the written plan.

1.6 RADIOLOGICAL EQUIPMENT

In addition to any applicable Nuclear Regulatory Commission, state, local, or other federal licenses or permits, and in accordance with requirements of EM 385-1-1, Safety and Health Requirement Manual, the Contractor is required to obtain a service permit to use, store, operate, or handle a radiation producing machine or radioactive materials on a Department of Defense (DOD) Installation. The service permit shall be obtained from the appropriate U.S. Army or U.S. Air Force Command through the Contracting Officer's representative. The Contractor should notify the Contracting Officer during the prework conference if a radiation producing device will be utilized on a DOD Installation in order to determine the permit application requirements, and allow a lead time of 45 days for obtaining a permit.

1.7 EXCAVATION AND TRENCHING

The standards for excavation and trenching are outlined in 29 CFR 1926, Subpart P. These standards shall be followed in addition to those outlined in EM 385-1-1.

PART 2 PRODUCTS (NOT APPLICABLE)

PART 3 EXECUTION (NOT APPLICABLE)

-- End of Section --

This page was intentionally left blank for duplex printing.

SECTION TABLE OF CONTENTS

DIVISION 01 - GENERAL REQUIREMENTS

SECTION 01451A

CONTRACTOR QUALITY CONTROL

10/02; Omaha Revision 11/02

PART 1 GENERAL

1.1 REFERENCES
1.2 PAYMENT

PART 2 PRODUCTS (Not Applicable)

PART 3 EXECUTION

3.1 GENERAL REQUIREMENTS
3.2 QUALITY CONTROL PLAN
3.2.1 Content of the CQC Plan
3.2.2 Additional Requirements for Design Quality Control (DQC) Plan
3.2.3 Acceptance of Plan
3.2.4 Notification of Changes
3.3 COORDINATION MEETING
3.4 QUALITY CONTROL ORGANIZATION
3.4.1 Personnel Requirements
3.4.2 CQC System Manager
3.4.3 CQC Personnel
3.4.4 Additional Requirement
3.4.5 Organizational Changes
3.5 SUBMITTALS AND DELIVERABLES
3.6 CONTROL
3.6.1 Preparatory Phase
3.6.2 Initial Phase
3.6.3 Follow-up Phase
3.6.4 Additional Preparatory and Initial Phases
3.7 TESTS
3.7.1 Testing Procedure
3.7.2 Testing Laboratories
3.7.2.1 Capability Check
3.7.2.2 Capability Recheck
3.7.3 Onsite Laboratory
3.7.4 Furnishing or Transportation of Samples for Testing
3.8 COMPLETION INSPECTION
3.8.1 Punch-Out Inspection
3.8.2 Pre-Final Inspection
3.8.3 Final Acceptance Inspection
3.9 DOCUMENTATION
3.10 SAMPLE FORMS
3.11 NOTIFICATION OF NONCOMPLIANCE

-- End of Section Table of Contents --

SECTION 01451A

CONTRACTOR QUALITY CONTROL
10/02; Omaha Revision 11/02

PART 1 GENERAL

1.1 REFERENCES

The publications listed below form a part of this specification to the extent referenced. The publications are referred to in the text by basic designation only.

AMERICAN SOCIETY FOR TESTING AND MATERIALS (ASTM)

ASTM D 3740	(2001) Minimum Requirements for Agencies Engaged in the Testing and/or Inspection of Soil and Rock as Used in Engineering Design and Construction
ASTM E 329	(2000b) Agencies Engaged in the Testing and/or Inspection of Materials Used in Construction

ENGINEERING REGULATIONS (ER)

ER 1110-1-12	(1 June 1993) Engineering and Design - Quality Management

1.2 PAYMENT

Separate payment will not be made for providing and maintaining an effective Quality Control program, and all costs associated therewith shall be included in the applicable unit prices or lump-sum prices contained in the Pricing Schedule.

PART 2 PRODUCTS (Not Applicable)

PART 3 EXECUTION

3.1 GENERAL REQUIREMENTS

The Contractor is responsible for quality control and shall establish and maintain an effective quality control system in compliance with the Contract Clause titled "Inspection of Construction." The quality control system shall consist of plans, procedures, and organization necessary to produce an end product which complies with the contract requirements. The system shall cover all design and construction operations, both onsite and offsite, and shall be keyed to the proposed construction sequence. The site project superintendent will be held responsible for the quality of work on the job and is subject to removal by the Contracting Officer for non-compliance with the quality requirements specified in the contract. The site project superintendent in this context shall be the highest level manager responsible for the overall construction activities at the site,

including quality and production. The site project superintendent shall maintain a physical presence at the site at all times, except as otherwise acceptable to the Contracting Officer, and shall be responsible for all construction and construction related activities at the site.

3.2 QUALITY CONTROL PLAN

The Contractor shall furnish for review by the Government, not later than 10 days after receipt of notice to proceed, the Contractor Quality Control (CQC) Plan proposed to implement the requirements of the Contract Clause titled "Inspection of Construction." The plan shall identify personnel, procedures, control, instructions, tests, records, and forms to be used. The Government will consider an interim plan for the first 30 days of operation. Design and construction will be permitted to begin only after acceptance of the CQC Plan or acceptance of an interim plan applicable to the particular feature of work to be started. Work outside of the features of work included in an accepted interim plan will not be permitted to begin until acceptance of a CQC Plan or another interim plan containing the additional features of work to be started.

3.2.1 Content of the CQC Plan

The CQC Plan shall include, as a minimum, the following to cover all design and construction operations, both onsite and offsite, including work by subcontractors, designers of record, consultants, architect/engineers (AE), fabricators, suppliers, and purchasing agents:

a. A description of the quality control organization, including a chart showing lines of authority and acknowledgment that the CQC staff shall implement the three phase control system for all aspects of the work specified. The staff shall include a CQC System Manager who shall report to the project superintendent.

b. The name, qualifications (in resume format), duties, responsibilities, and authorities of each person assigned a CQC function.

c. A copy of the letter to the CQC System Manager signed by an authorized official of the firm which describes the responsibilities and delegates sufficient authorities to adequately perform the functions of the CQC System Manager, including authority to stop work which is not in compliance with the contract. The CQC System Manager shall issue letters of direction to all other various quality control representatives outlining duties, authorities, and responsibilities. Copies of these letters shall also be furnished to the Government.

d. Procedures for scheduling, reviewing, certifying, and managing submittals, including those of subcontractors, designers of record, consultants, architect engineers (AE), offsite fabricators, suppliers, and purchasing agents. These procedures shall be in accordance with Section 01330 SUBMITTAL PROCEDURES.

e. Control, verification, and acceptance testing procedures for each specific test to include the test name, specification paragraph requiring test, feature of work to be tested, test frequency, and person responsible for each test. (Laboratory facilities approved by the Contracting Officer shall be used.)

f. Procedures for tracking preparatory, initial, and follow-up control phases and control, verification, and acceptance tests including documentation.

g. Procedures for tracking design and construction deficiencies from identification through acceptable corrective action. These procedures shall establish verification that identified deficiencies have been corrected.

h. Reporting procedures, including proposed reporting formats.

i. A list of the definable features of work. A definable feature of work is a task which is separate and distinct from other tasks, has separate control requirements, and may be identified by different trades or disciplines, or it may be work by the same trade in a different environment. Although each section of the specifications may generally be considered as a definable feature of work, there are frequently more than one definable features under a particular section. This list will be agreed upon during the coordination meeting.

3.2.2 Additional Requirements for Design Quality Control (DQC) Plan

The following additional requirements apply to the Design Quality Control (DQC) plan:

(1) The Contractor's QCP Plan shall provide and maintain a Design Quality Control (DQC) Plan as an effective quality control program which will assure that all services required by this design-build contract are performed and provided in a manner that meets professional architectural and engineering quality standards. As a minimum, all documents shall be technically reviewed by competent, independent reviewers identified in the DQC Plan. The same element that produced the product shall not perform the independent technical review (ITR). In addition, the DQC Plan shall incorporate the Lessons Learned Databases provided by the Government. The Contractor shall correct errors and deficiencies in the design documents prior to submitting them to the Government.

(2) The Contractor shall include the design schedule in the master project schedule, showing the sequence of events involved in carrying out the project design tasks within the specific contract period. This should be at a detailed level of scheduling sufficient to identify all major design tasks, including those that control the flow of work. The schedule shall include review and correction periods associated with each item. This should be a forward planning as well as a project monitoring tool. The schedule reflects calendar days and not dates for each activity. If the schedule is changed, the Contractor shall submit a revised schedule reflecting the change within 7 calendar days. The Contractor shall include in the DQC Plan the discipline-specific checklists to be used during the design and quality control of each submittal. These completed checklists shall be submitted at each design phase as part of the project documentation. Example checklists can be found in ER 1110-1-12.

(3) The DQC Plan shall be implemented by an Design Quality Control Manager who has the responsibility of being cognizant of and assuring that all documents on the project have been coordinated. This individual shall be a person who has verifiable engineering or architectural design experience and is a registered professional engineer or architect. The Design Quality Control Manager shall be assigned as Design Quality Control Manager, but may have duties as Design Project Manager in addition to quality control. The Contractor shall notify the Contracting Officer, in writing, of the name of the individual, and the name of an alternate person assigned to the position.

The Contracting Officer will notify the Contractor in writing of the acceptance of the DQC Plan. After acceptance, any changes proposed by the Contractor are subject to the acceptance of the Contracting Officer.

3.2.3 Acceptance of Plan

Acceptance of the Contractor's plan is required prior to the start of design and construction. Acceptance is conditional and will be predicated on satisfactory performance during the design and construction. The Government reserves the right to require the Contractor to make changes in his CQC Plan and operations including removal of personnel, as necessary, to obtain the quality specified.

3.2.4 Notification of Changes

After acceptance of the CQC Plan, the Contractor shall notify the Contracting Officer in writing of any proposed change. Proposed changes are subject to acceptance by the Contracting Officer.

3.3 COORDINATION MEETING

After the Postaward Conference, before start of design or construction, and prior to acceptance by the Government of the CQC Plan, the Contractor shall meet with the Contracting Officer or Authorized Representative and discuss the Contractor's quality control system. The CQC Plan shall be submitted for review a minimum of 10 calendar days prior to the Coordination Meeting. During the meeting, a mutual understanding of the system details shall be developed, including the forms for recording the CQC operations, design activities, control activities, testing, administration of the system for both onsite and offsite work, and the interrelationship of Contractor's Management and control with the Government's Quality Assurance. Minutes of the meeting shall be prepared by the Contractor and signed by both the Contractor and the Contracting Officer. The minutes shall become a part of the contract file. There may be occasions when subsequent conferences will be called by either party to reconfirm mutual understandings and/or address deficiencies in the CQC system or procedures which may require corrective action by the Contractor.

3.4 QUALITY CONTROL ORGANIZATION

3.4.1 Personnel Requirements

The requirements for the CQC organization are a CQC System Manager, a Design Quality Control Manager, and sufficient number of additional

qualified personnel to ensure safety and contract compliance. The Safety and Health Manager shall receive direction and authority from the CQC System Manager and shall serve as a member of the CQC staff. Personnel identified in the technical provisions as requiring specialized skills to assure the required work is being performed properly will also be included as part of the CQC organization. The Contractor's CQC staff shall maintain a presence at the site at all times during progress of the work and have complete authority and responsibility to take any action necessary to ensure contract compliance. The CQC staff shall be subject to acceptance by the Contracting Officer. The Contractor shall provide adequate office space, filing systems and other resources as necessary to maintain an effective and fully functional CQC organization. Complete records of all letters, material submittals, show drawing submittals, schedules and all other project documentation shall be promptly furnished to the CQC organization by the Contractor. The CQC organization shall be responsible to maintain these documents and records at the site at all times, except as otherwise acceptable to the Contracting Officer.

3.4.2 CQC System Manager

The Contractor shall identify as CQC System Manager an individual within the onsite work organization who shall be responsible for overall management of CQC and have the authority to act in all CQC matters for the Contractor. The CQC System Manager shall be a construction person with a minimum of 5 years in related work. This CQC System Manager shall be on the site at all times during construction and shall be employed by the prime Contractor. The CQC System Manager shall be assigned as System Manager but may have duties as project superintendent in addition to quality control. An alternate for the CQC System Manager shall be identified in the plan to serve in the event of the System Manager's absence. The requirements for the alternate shall be the same as for the designated CQC System Manager.

3.4.3 CQC Personnel

A staff shall be maintained under the direction of the CQC system manager to perform all QC activities. The staff must be of sufficient size to ensure adequate QC coverage of all work phases, work shifts, and work crews involved in the construction. These personnel may perform other duties, but must be fully qualified by experience and technical training to perform their assigned QC responsibilities and must be allowed sufficient time to carry out these responsibilities. The QC plan will clearly state the duties and responsibilities of each staff member. A Design Quality Control Manager, who is a Registered Architect or Professional Engineer, shall be part of the Contractor's quality control staff. Other technical specifications may specify individuals for maintaining quality control for specific areas of work. These individuals shall be under the direction of the CQC System Manager.

3.4.4 Additional Requirement

In addition to the above experience and/or education requirements the CQC System Manager shall have completed the course entitled "Construction Quality Management For Contractors". This course is periodically offered at each of the four area offices in the Omaha District according to the following revolving training schedule:.

Badger Area	First Session	Between 15 & 25 April
	Second Session	Between 15 & 25 October
Point of Contact	Roy Brewer	(319) 753-1386
Black Hills Area	First Session	Between 1 & 10 March
	Second Session	Between 1 & 10 September
Point of Contact	Dwight Pochant	(605) 923-2983
Fort Crook Area	First Session	Between 15 & 25 January
	Second Session	Between 15 & 25 July
Point of Contact	Al Kreisler	(402) 293-2540
Rocky Mountain	First Session	Between 1 & 10 June
	Second Session	Between 1 & 10 December
Point of Contact	Paul Jendzejec	(719) 556-4184

The exact date and location for the sessions will be determined approximately 30 days in advance of the training. The cost of training is presently established at $50 to be paid by each student in advance of the training. For information about a particular session, the best source is the point of contact listed above.

3.4.5 Organizational Changes

The Contractor shall maintain the CQC staff at full strength at all times. When it is necessary to make changes to the CQC staff, the Contractor shall revise the CQC Plan to reflect the changes and submit the changes to the Contracting Officer for acceptance.

3.5 SUBMITTALS AND DELIVERABLES

Submittals, if needed, shall be made as specified in Section 01330 SUBMITTAL PROCEDURES. The CQC organization shall be responsible for certifying that all submittals and deliverables are in compliance with the contract requirements. When Section 15950A HEATING, VENTILATING AND AIR CONDITIONING (HVAC) CONTROL SYSTEMS; 15951A DIRECT DIGITAL CONTROL FOR HVAC; 15990A TESTING, ADJUSTING, AND BALANCING OF HVAC SYSTEMS; or 15995A COMMISSIONING OF HVAC SYSTEMS are included in the contract, the submittals required by those sections shall be coordinated with Section 01330 SUBMITTAL PROCEDURES to ensure adequate time is allowed for each type of submittal required.

3.6 CONTROL

Contractor Quality Control is the means by which the Contractor ensures that the construction, to include that of subcontractors and suppliers, complies with the requirements of the contract. At least three phases of control shall be conducted by the CQC System Manager for each definable feature of the construction work as follows:

3.6.1 Preparatory Phase

This phase shall be performed prior to beginning work on each definable feature of work, after all required plans/documents/materials are approved/accepted, and after copies are at the work site. This phase shall include:

a. A review of each paragraph of applicable specifications, reference

codes, and standards. Prior to the preparatory meeting for each definable feature of work, the Contractor shall provide all technical references (i.e. building codes, life safety codes, etc.) referenced in the project specifications for feature(s) of work being addressed at the preparatory meeting. These technical references shall be onsite and available for use by Contractor and Government personnel before the preparatory meeting is held and maintained until the feature(s) of work is/are accepted by the Government.

b. A review of the contract drawings.

c. A check to assure that all materials and/or equipment have been tested, submitted, and approved.

d. Review of provisions that have been made to provide required control inspection and testing.

e. Examination of the work area to assure that all required preliminary work has been completed and is in compliance with the contract.

f. A physical examination of required materials, equipment, and sample work to assure that they are on hand, conform to approved shop drawings or submitted data, and are properly stored.

g. A review of the appropriate activity hazard analysis to assure safety requirements are met.

h. Discussion of procedures for controlling quality of the work including repetitive deficiencies. Document construction tolerances and workmanship standards for that feature of work.

i. A check to ensure that the portion of the plan for the work to be performed has been accepted by the Contracting Officer.

j. Discussion of the initial control phase.

k. The Government shall be notified at least 48 hours in advance of beginning the preparatory control phase. This phase shall include a meeting conducted by the CQC System Manager and attended by the superintendent, other CQC personnel (as applicable), and the foreman responsible for the definable feature. The results of the preparatory phase actions shall be documented by separate minutes prepared by the CQC System Manager and attached to the daily CQC report. The Contractor shall instruct applicable workers as to the acceptable level of workmanship required in order to meet contract specifications.

3.6.2 Initial Phase

This phase shall be accomplished at the beginning of a definable feature of work. The following shall be accomplished:

a. A check of work to ensure that it is in full compliance with contract requirements. Review minutes of the preparatory meeting.

b. Verify adequacy of controls to ensure full contract compliance. Verify required control inspection and testing.

c. Establish level of workmanship and verify that it meets minimum acceptable workmanship standards. Compare with required sample panels as appropriate.

d. Resolve all differences.

e. Check safety to include compliance with and upgrading of the safety plan and activity hazard analysis. Review the activity analysis with each worker.

f. The Government shall be notified at least 48 hours in advance of beginning the initial phase. Separate minutes of this phase shall be prepared by the CQC System Manager and attached to the daily CQC report. Exact location of initial phase shall be indicated for future reference and comparison with follow-up phases.

g. The initial phase should be repeated for each new crew to work onsite, or any time acceptable specified quality standards are not being met.

3.6.3 Follow-up Phase

Daily checks shall be performed to assure control activities, including control testing, are providing continued compliance with contract requirements, until completion of the particular feature of work. The checks shall be made a matter of record in the CQC documentation. Final follow-up checks shall be conducted and all deficiencies corrected prior to the start of additional features of work which may be affected by the deficient work. The Contractor shall not build upon nor conceal non-conforming work.

3.6.4 Additional Preparatory and Initial Phases

Additional preparatory and initial phases shall be conducted on the same definable features of work if: the quality of on-going work is unacceptable; if there are changes in the applicable CQC staff, onsite production supervision or work crew; if work on a definable feature is resumed after a substantial period of inactivity; or if other problems develop.

3.7 TESTS

3.7.1 Testing Procedure

The Contractor shall perform specified or required tests to verify that control measures are adequate to provide a product which conforms to contract requirements. Upon request, the Contractor shall furnish to the Government duplicate samples of test specimens for possible testing by the Government. Testing includes operation and/or acceptance tests when specified. The Contractor shall procure the services of a Corps of Engineers approved testing laboratory or establish an approved testing laboratory at the project site. The Contractor shall perform the following activities and record and provide the following data:

a. Verify that testing procedures comply with contract requirements.

b. Verify that facilities and testing equipment are available and comply with testing standards.

c. Check test instrument calibration data against certified standards.

d. Verify that recording forms and test identification control number system, including all of the test documentation requirements, have been prepared.

e. Results of all tests taken, both passing and failing tests, shall be recorded on the CQC report for the date taken. Specification paragraph reference, location where tests were taken, and the sequential control number identifying the test shall be given. If approved by the Contracting Officer, actual test reports may be submitted later with a reference to the test number and date taken. An information copy of tests performed by an offsite or commercial test facility shall be provided directly to the Contracting Officer. Failure to submit timely test reports as stated may result in nonpayment for related work performed and disapproval of the test facility for this contract.

3.7.2 Testing Laboratories

3.7.2.1 Capability Check

The Government reserves the right to check laboratory equipment in the proposed laboratory for compliance with the standards set forth in the contract specifications and to check the laboratory technician's testing procedures and techniques. Laboratories utilized for testing soils, concrete, asphalt, and steel shall meet criteria detailed in ASTM D 3740 and ASTM E 329.

3.7.2.2 Capability Recheck

If the selected laboratory fails the capability check, the Contractor will be assessed the actual cost for the recheck to reimburse the Government for each succeeding recheck of the laboratory or the checking of a subsequently selected laboratory. Such costs will be deducted from the contract amount due the Contractor.

3.7.3 Onsite Laboratory

The Government reserves the right to utilize the Contractor's control testing laboratory and equipment to make assurance tests, and to check the Contractor's testing procedures, techniques, and test results at no additional cost to the Government.

3.7.4 Furnishing or Transportation of Samples for Testing

Costs incidental to the transportation of samples or materials shall be borne by the Contractor. Samples of materials for test verification and acceptance testing by the Government shall be delivered to the Resident or Area (as directed) Office.

Coordination for each specific test, exact delivery location, and dates will be made through the Resident or Area (as directed) Office.

3.8 COMPLETION INSPECTION

3.8.1 Punch-Out Inspection

Near the end of the work, or any increment of the work established by a time stated in the Special Clause, "Commencement, Prosecution, and Completion of Work", or by the specifications, the CQC Manager shall conduct an inspection of the work. A punch list of items which do not conform to the approved drawings and specifications shall be prepared and included in the CQC documentation, as required by paragraph DOCUMENTATION. The list of deficiencies shall include the estimated date by which the deficiencies will be corrected. The CQC System Manager or staff shall make a second inspection to ascertain that all deficiencies have been corrected. Once this is accomplished, the Contractor shall notify the Government that the facility is ready for the Government Pre-Final inspection.

3.8.2 Pre-Final Inspection

The Government will perform the pre-final inspection to verify that the facility is complete and ready to be occupied. A Government Pre-Final Punch List may be developed as a result of this inspection. The Contractor's CQC System Manager shall ensure that all items on this list have been corrected before notifying the Government, so that a Final inspection with the customer can be scheduled. Any items noted on the Pre-Final inspection shall be corrected in a timely manner. These inspections and any deficiency corrections required by this paragraph shall be accomplished within the time slated for completion of the entire work or any particular increment of the work if the project is divided into increments by separate completion dates.

3.8.3 Final Acceptance Inspection

The Contractor's Quality Control Inspection personnel, plus the superintendent or other primary management person, and the Contracting Officer's Representative shall be in attendance at the final acceptance inspection. Additional Government personnel including, but not limited to, those from Base/Post Civil Facility Engineer user groups, and major commands may also be in attendance. The final acceptance inspection will be formally scheduled by the Contracting Officer based upon results of the Pre-Final inspection. Notice shall be given to the Contracting Officer at least 14 days prior to the final acceptance inspection and shall include the Contractor's assurance that all specific items previously identified to the Contractor as being unacceptable, along with all remaining work performed under the contract, will be complete and acceptable by the date scheduled for the final acceptance inspection. Failure of the Contractor to have all contract work acceptably complete for this inspection will be cause for the Contracting Officer to bill the Contractor for the Government's additional inspection cost in accordance with the contract clause titled "Inspection of Construction".

3.9 DOCUMENTATION

The Contractor shall maintain current records providing factual evidence that required quality control activities and/or tests have been performed. These records shall include the work of subcontractors and suppliers and shall be on an acceptable form that includes, as a minimum, the following information:

a. Contractor/subcontractor and their area of responsibility.

b. Operating plant/equipment with hours worked, idle, or down for repair.

c. Work performed each day, giving location, description, and by whom. When Network Analysis (NAS) is used, identify each phase of work performed each day by NAS activity number.

d. Test and/or control activities performed with results and references to specifications/drawings requirements. The control phase shall be identified (Preparatory, Initial, Follow-up). List of deficiencies noted, along with corrective action.

e. Quantity of materials received at the site with statement as to acceptability, storage, and reference to specifications/drawings requirements.

f. Submittals and deliverables reviewed, with contract reference, by whom, and action taken.

g. Offsite surveillance activities, including actions taken.

h. Job safety evaluations stating what was checked, results, and instructions or corrective actions.

i. Instructions given/received and conflicts in plans and/or specifications.

j. Contractor's verification statement.

These records shall indicate a description of trades working on the project; the number of personnel working; weather conditions encountered; and any delays encountered. These records shall cover both conforming and deficient features and shall include a statement that equipment and materials incorporated in the work and workmanship comply with the contract. The original and one copy of these records in report form shall be furnished to the Contracting Officer's Representative on the first day following the date(s) covered by the report, except that reports need not be submitted for days on which no work is performed. As a minimum, one report shall be prepared and submitted for every 7 days of no work and on the last day of a no work period. All calendar days shall be accounted for throughout the life of the contract. The first report following a day of no work shall be for that day only. Reports shall be signed and dated by the CQC System Manager. The report from the CQC System Manager shall include copies of test reports and copies of reports prepared by all subordinate quality control personnel.

3.10 SAMPLE FORMS

Sample forms enclosed at the end of this section.

3.11 NOTIFICATION OF NONCOMPLIANCE

The Contracting Officer will notify the Contractor of any detected noncompliance with the foregoing requirements. The Contractor shall take immediate corrective action after receipt of such notice. Such notice, when delivered to the Contractor at the work site, shall be deemed sufficient for the purpose of notification. If the Contractor fails or refuses to comply promptly, the Contracting Officer may issue an order

stopping all or part of the work until satisfactory corrective action has been taken. No part of the time lost due to such stop orders shall be made the subject of claim for extension of time or for excess costs or damages by the Contractor.

_____
(FIRM NAME)

DAILY QUALITY CONTROL REPORT

Daily Report No.: _____ DATE: _____
Contract No. _____
Project Title & Location:
_____
Weather: ____ Precipitation: _____ in. _____ Temp:____ Min. ____ Max. ____

1. Contract/Subcontractors and Area of Responsibility:

NUMBER:	TRADE	HOURS	EMPLOYER	LOCATION/DESCRIPTION WORK

2. Operating Plant or Equipment. (Not hand tools)

Plant/Equipment	Date of Arrival/Departure	Date of Safety Check	Hours Used	Hours Idle	Hours Repair

3. Work Performed Today: (Indicate location and description of work performed by prime and/or subcontractors. When network analysis is used, identify work by NAS activity number).

4. Control Activities Performed:
   Preparatory Inspections: (Identify feature of work and attach minutes).
   Initial Inspections: (Identify feature of work and attach minutes).
   Follow-Up Inspections: (List inspections performed, results of inspection compared to specification requirements, and corrective actions taken when deficiencies are noted).

5. Tests Performed and Test Results: (Identify test requirement by paragraph number in specifications and/or sheet number in plans).

6. Material Received: (Note inspection results and storage provided).

7. Submittals Reviewed:

(a) Submittal No.	(b) Spec/Plan Reference	(c) By Whom	(d) Action

8. Offsite Surveillance Activities, Including Action Taken:

_____
_____
_____
_____
_____
_____
_____
_____

9. Job Safety: (List items checked, results, instructions and corrective actions taken).

_____
_____
_____
_____
_____
_____
_____
_____
_____

10. Remarks: (Instructions received or given. Conflict(s) in Plans and/or specifications. Delays encountered.).

_____
_____
_____
_____
_____
_____
_____

Contractor's Verification: On behalf of the Contractor, I certify this report is complete and correct, and all materials and equipment used and work performed during this reporting period are in compliance with the contract plans and specifications, to the best of my knowledge, except as may be noted above.

_____

CQC System Manager Date

-- End of Section --

SECTION 01510

SPECIAL SECURITY

PART 1 GENERAL **2**

1.1 NOT USED. 2
1.2 INTRODUCTION. 2
1.3 CONSTRUCTION OF FREE ZONE. 2
1.4 SECURITY OFFICERS. 2
1.5 SECURITY ZONES. 2
1.6 ESCORT OFFICIALS. 3
1.7 ACCESS INTO SECURITY ZONES. 5
1.8 RESTRICTED AREA/ESCORT BADGING PROCEDURES. 8
1.9 NOT USED. 9
1.10 NOT USED. 9
1.11 TRAINING. 9
1.12 VEHICLE PROCEDURES. 10
1.13 OPERATIONAL DELAYS. 10
1.14 RIGHT TO DENY ENTRY. 10

PART 2 PRODUCTS (NOT APPLICABLE) **11**

PART 3 EXECUTION (NOT APPLICABLE) **11**

-- END OF SECTION -- **11**

SECTION 01510

SPECIAL SECURITY

PART 1 GENERAL

Attachments: Attachment No. 1: AF Form 2586, Unescorted Entry Authorization Certificate
Attachment No. 2: AF Form 2583, Request for Personnel Security Action
Attachment No. 3: SF 86, Questionnaire for National Security Positions

1.1 NOT USED.

1.2 INTRODUCTION.

For areas outside Secure Area (the double fence), the provisions found in Section 00800 SPECIAL CONTRACT REQUIREMENTS apply. Work within the double fence will require Contractor access into the Secure Area Fence. For the work inside these areas, the provisions found in this section shall be followed.

1.3 CONSTRUCTION OF FREE ZONE.

Before any work begins on the portion of work inside the Secure Area (the double fence), the Contractor shall erect a construction free zone around the entire construction area, as shown on the project drawings. All construction materials and Contractor trailers shall be located outside of the double fence and away from this free zone. During construction of the free zone, Contractor-provided escorts meeting the qualifications listed in this section will escort all construction workers.

1.4 SECURITY OFFICERS.

All security related matters will be processed through the Contractor and Government Security Officers.

1.4.1 CONTRACTOR'S SECURITY OFFICER.

The Contractor shall submit to the Contracting Officer for approval within twenty (20) days after Notice to Proceed, the name of an individual to serve as the Security Officer responsible for all security matters with regard to this contract.

1.4.2 GOVERNMENT'S SECURITY OFFICER.

All security matters shall be coordinated through the Corps of Engineers, Schriever AFB Project Office serving as the Government's Security Officer. The Government's Security Officer is also a Representative of the Contracting Officer. The Corps of Engineers Security Officer will coordinate all security matters with the 50SFS.

1.5 SECURITY ZONES.

Three "zones" are employed by Schriever AFB to assure security integrity is maintained. The Contractor will be working in these zones in the performance of work under this contract.

1.5.1 ZONE 1.

Zone 1 is a Restricted (Controlled) Area. This area is located within the double security fence surrounding Schriever AFB but outside the Free Zone (Zone 2). All personnel entering this area must be properly badged with Restricted Area Badge, Temporary Badges, or display Visitor Badges and be escorted by an escort official.

1.5.2 ZONE 2.

Zone 2 is a Construction Free Zone. Construction Free Zone boundaries are specified herein and are identified on the drawings. A Construction Free Zone is a fenced-in-area in which Contractor employees who do not possess a Restricted Area Badge may move about freely. It encompasses the work site for the work inside the double fenced. Restricted Area Badges are not required in this area; however, the Schriever AFB Badging System (V-Badges) shall be used to prevent unauthorized entry.

1.5.3 ZONE 3.

Zone 3 is not applicable to this project.

1.6 ESCORT OFFICIALS.

Any individual issued a Restricted Area Badge may serve as an escort for those individuals who do not have Restricted Area Badges. The Contractor shall provide sufficient escorts for work in Zone 1. All personnel proposed as escort officials must have been awarded, at a minimum, a high school equivalence certificate and possess no health problems which would interfere with duty performance by prohibiting walking or standing for long periods of time. Escorts shall be trained and knowledgeable about Schriever AFB duress procedures. The Contractor shall ensure escorts follow procedures defined by the 50SFS in performing spot checks of all hand-carried materials (for pedestrian entry) and vehicle carried materials (for construction vehicles) to protect against the introduction of contraband (weapons, explosives, illegal substances, etc.) onto Schriever AFB. The Contractor shall provide 50SFS with identity and contact information for all provided escort and guard personnel, to include duty rosters, home and business contact information, and information which Contractor supervisors can be immediately contacted in the event of emergencies. The Contractor shall provide the necessary completed documents for processing of the proposed escorts. There are two types of escort officials at Schriever AFB. They are Designated Escort Officials (DEO) and Standard Escort Officials (SEO). Each has different functions and identifications.

1.6.1 DESIGNATED ESCORT OFFICIAL (DEO).

A DEO for Schriever AFB is identified in a number of different ways, depending upon the type of Restricted Area Badge in use. Some Restricted Area Badges have a slash across Area Seven, some have an

"(E, 7)" typed in red under the photo, and some have a large "E" to the right of the person's name with the area 7 having a blue background. In order for individuals without Restricted Area Badges to be permitted entry and movement in Zone 1, they must be processed through the Visitor’s Center, issued a Visitor Badge (V-Badge), and escorted into the Restricted Area by a DEO.

1.6.2 STANDARD ESCORT OFFICIAL (SEO).

Any individual who possesses an unescorted entry badge may serve as a SEO. Once the DEO has processed someone requiring escort into the Restricted Area, the DEO may transfer escort responsibilities to a SEO.

1.6.3 HIRED ESCORTS.

Escort support shall be provided through direct hiring of personnel from a private security firm. All personnel to be used as escorts shall have previously received security clearances or presently maintain a Secret Clearance and have proof of a National Security Check (NAC) or a previous favorable NAC. All proposed escorts shall be processed in accordance with paragraph: RESTRICTED AREA/ESCORT BADGING PROCEDURES.

1.6.4 ESCORT/WORKER RATIO.

Each escort may control as many people as he/she can handle (positive control and line of site for all escorted personnel must be maintained). The Contractor shall provide a sufficient number of escorts to ensure adequate observation and physical control of construction workers while in Zone 1, regardless of whether escort is of pedestrian construction personnel or of construction vehicles. Final number of escort personnel and functional policies and procedures shall be coordinated with 50SPS prior to construction start. The Contractor shall, as a minimum, provide the following personnel. Note that “guards”, as used herein, shall meet the same qualifications as “escorts”, as delineated in this Section.

(1) Not Used.

(2) Whenever vehicles must enter the Zone 1 Area, the contractor shall provide one unarmed guard at the South Entry Gate into the Schriever AFB double fence to verify identity of pedestrian construction personnel prior to their entry into Zone 1 (Restricted Area). This guard shall also perform spot-checks to prevent the introduction of contraband onto Schriever AFB.

(3) Not Used.

(4) Enough escorts to accompany construction vehicles and personnel when they work outside the free zone but stay within the Restricted Area (e.g., when installing utility connections outside the free zone).

(5) Security monitors within the free zone, as described in Paragraph 1.7.2.2.c below.

1.6.5 NOT USED.

1.7 ACCESS INTO SECURITY ZONES.

Access to the security zones shall be in accordance with the following requirements.

1.7.1 ZONE 1.

Any person within the Schriever AFB Restricted Area (Zone 1) will be required to display a Restricted Area Badge, or display a Visitor Badge and be escorted by a Designated Escort Official (DEO) or Standard Escort Official (SEO). Entry to Zone 1 shall be through the South Gate of the Secure Area Fence, which is the designated Entry Control Point (ECP). This gate will be controlled using the Contractor's Construction Personnel Roster.

1.7.1.1 Worker's Requiring Escort.

All unbadged employees shall obtain a Visitor's Badge (V-Badge) at the Visitor’s Center and proceed to the Entry Control Point (ECP). All day laborers (as defined in paragraph: Construction Personnel Roster below) requiring a V-Badge will need to be processed in each day at the Visitor’s Center by their DEO. All workers, other than day laborers, shall follow the procedures in this specification section to obtain a Visitors Badge (V-Badge) for a period no to exceed ninety (90) days. The employee may retain these V-Badges for this period of time, after which the employee shall turn in the V-Badge to the Visitor’s Center for reissuance. All V-Badged employees may proceed to the ECP to wait processing through the ECP by the DEO. After processing through the ECP, the Designated Escort Official may continue to escort the employee(s) themselves or relinquish the employee(s) after entry to the area to another badged employee serving as either a DEO or Standard Escort Official (SEO). All escorted employees must be under the surveillance of an escort at all times. V-Badges for all day laborers will be turned in to the DEO each day upon leaving the Restricted Area. The DEO will then turn in all V-Badges to the Schriever AFB Security Police. V-Badges for worker other than day laborers may be retained by the employee as described in this paragraph.

1.7.1.2 Entry Control Points (ECP).

All personnel shall enter the Restricted Area only through the designated Entry Control Points (ECP).

1.7.1.3 Construction Personnel Roster.

Upon Contractor receipt of escort approval from the Government, the Contractor shall provide a Construction Personnel Roster to the Government Security Officer. The Construction Personnel Roster shall list all Contractor employees who must perform work in the Restricted Area. The Construction Personnel Roster shall identify the DEO's, SEO's and those requiring escorting. The Construction Personnel Roster shall be submitted on company stationary and signed by the Contractor's Security Officer. All construction personnel, except day laborers, must successfully complete a Local Agency Check. Day

laborers are defined as those workers who will not be on site for more than five (5) days at a time. Local Agency Checks shall be requested through 50SFS. Personnel who do not have a successfully completed Local Agency Check will be denied access to Schriever AFB. The Schriever AFB Security Police will verify the identity and authorization of each Contractor employee entering the area by means of a picture identification card and the Construction Personnel Roster respectively. The Contractor shall ensure the list is current at all times. Persons not listed on the Construction Personnel Roster will be denied entry. The Construction Personnel Roster shall be updated, at a minimum, weekly to remove those employees no longer requiring access. The Security Police may conduct a search of any baggage or items that the employee requires for the project. The Security Police may search vehicles operating on Schriever AFB by the Contractor. The search will be primarily to ensure no explosive devices or unauthorized personnel are covertly introduced onto Schriever AFB.

1.7.1.4 Vehicle Passes.

The Contractor may acquire temporary vehicle passes at the Visitor’s Center. Only those vehicles determined necessary in the accomplishment of the work will be permitted access to Zone 1.

1.7.1.5 Security Breach.

When inside Restricted Areas, Contractor/subcontractor personnel shall display Restricted Area Badges on their outer garments above their waist. All personnel displaying badges shall provide such badges to the Schriever AFB Security Police for examination upon request. The badge shall be removed upon exiting Restricted Areas and deposited on their person or within hand carried items to prevent loss. Any person not properly displaying badges or violating escort procedures (working out of view of escort) shall be treated as a breach of security and is susceptible to apprehension, search and detainment.

1.7.1.6 Surrendering of Badges.

Restricted Area Badges are valid only as long as the employee who was issued the badge has a frequent and regular need to enter the area(s). All Restricted Area and Temporary Badges must be surrendered to the Schriever AFB Security Police through the Contracting Office when the need to enter no longer exists, or when employment is terminated. The Contractor is responsible for ensuring unwarranted badges are turned in to the Government's Security Officer. The associated original of AF Form 2586 must be turned in with the badge. All badges must be returned upon termination or completion of the contract or when requested by the Contracting Officer.

1.7.2 ZONE 2.

All personnel entering the Construction Free Zone (Zone 2) will be controlled using the Schriever AFB Badging System (using "V" Badges). Control of personnel allowed entry into Zone 2 shall be provided by use of a Construction Personnel Roster, developed and maintained by the Contractor. The Contractor shall post fenced areas of Zone 2 with signs provided by the Contracting Officer. Assuring integrity of the free zone will be the Contractor's responsibility.

All vehicles entering Schriever AFB will be required to display a vehicle pass issued at the Visitor’s Center.

1.7.2.1 Personnel Control.

Control of personnel entering Zone 2 (Construction Free Zone) will be accomplished by use of the Schriever AFB Badging System and the Construction Personnel Roster. All personnel within Zone 2 shall carry photographic identification at all times.

The Contractor shall provide a Construction Personnel Roster to the Government's Security Officer. The Construction Personnel Roster shall list all personnel requiring access to Zone 2. The Construction Personnel Roster shall be submitted on company stationary and signed by the Contractor's Security Officer. The Contractor's Security Officer, or his approved designee, serving as the Entry Controller, will verify the identity and authorization of each Contractor employee passing through the gate by means of a picture I.D. Card and the Construction Personnel Roster. The Construction Personnel Roster is to be kept current at all times and submitted, at a minimum, once a week for review by the Government's Security Officer to assure personnel no longer requiring access are removed from the Construction Personnel Roster. Also, any person not identified on the Construction Personnel Roster shall be denied access. The Contractor shall notify 50SFS/SFO on the day they dismiss any employee under "other than normal circumstances."

1.7.2.2 Free Zone Control/Boundary Monitoring.

Free Zone Control and Boundary Monitoring shall be in accordance with the following procedures.

a. Free Zone Opening.

Prior to the start of each workday, the on-duty Entry Controller will be required to contact the Schriever AFB Security Police to activate the free-zone area. The Entry Controller will be required to have a means of direct communication to the Schriever AFB Security Police to open/close perimeter free-zones or to provide other security response if needed.

b. Free Zone Purge.

At the completion of the workday, the Entry Controller will notify the Schriever AFB Security Police that the free zone is ready to be secured. The Entry Controller and the Schriever AFB Security Police personnel will purge the free zone together to ensure all workers have vacated.

c. Boundary Monitoring.

While the free zone is active, the Contractor working within must continuously monitor the boundary and any violations of the boundary immediately reported to the Entry Controller. The Contractor shall provide the personnel needed to assure integrity of boundaries is maintained. The sole duty of these personnel will be security monitoring. Construction workers with a dual

role as security monitor are unacceptable. These personnel will also require a line of communication to the Entry Controller so that the Schriever AFB Security Police can be notified to respond if the need arises. The Contractor shall coordinate the method of providing two-way communications with the 50SFS (desired/used radio frequencies, phone requirements, etc.). If the Contractor selects a mobile radio solution, the Contractor shall provide to the 50SFS a compatible transceiving station (along with all required equipment, e.g., battery chargers, power adapters, etc.) for the duration of the contract.

d. Not Used.

e. Not Used.

1.8 RESTRICTED AREA/ESCORT BADGING PROCEDURES.

The Contractor shall provide the necessary documents for each individual the Contractor proposes for issuance of a Restricted Area Badge. A Restricted Area Badge is required for access to, and escorting in, Zone 1. Depending upon the past security investigation clearance of the proposed escort, the processing procedures as well as the time necessary for approval varies. At a minimum, each individual proposed for issuance of an unescorted entry badge must have been the subject of a favorable National Security Check (NAC).

1.8.1 PREVIOUS NAC/BREAK IN SERVICE.

The Contractor's Security Officer must verify that the proposed escort did at one time receive a favorable NAC and has not had a break in service of over one year. The Contractor's Security Officer shall furnish such proof to the Government's Security Officer. Upon confirmation of previous security clearance by the Government's Security Officer, the Contractor shall complete AF Form 2586, Unescorted Entry Authorization Certificate (attachment 1) and submit to the Government's Security Officer for approval. The Contractor's Security Officer shall identify those individuals he desires to have DEO capabilities upon submission of AF Form 2586 to the Government's Security Officer for recertification and approval. Upon approval, the AF Form 2586 will be returned. The Contractor will then have the proposed escort hand carry the AF Form 2586 to the Visitor’s Center for issuance of a Restricted Area Badge. The completed AF Force 2586 will be provided to the employee along with the Restricted Area Badge. The completed form shall be returned to the Government's Security Officer. All completed AF Forms 2586 are property of the Government and will be retained by the Government's Security Officer. A minimum of sixty (60) days shall be permitted for Government processing of the AF Form 2586, recertification by way of a local files check by the Schriever AFB Security Police, Government approval of the proposed escorts, and issuance of a Restricted Area Badge. This sixty (60) calendar day period does not include the time required for confirmation of the proposed escorts previous receipt of a favorable NAC.

1.8.1.1 Previous NAC/Current Service.

A proposed escort may have previously been the subject of a favorable NAC and is presently maintaining that position for which the NAC was received shall be verified by the Contractor's Security Officer and proof submitted to the Government's Security Officer. Upon confirmation of such, the Contractor shall prepare and submit AF Form 2586 (attachment 1) on the proposed escort. Upon approval, the AF Form 2586 will be returned. The Contractor will have the proposed escort hand carry the AF Form 2586 to the Visitor’s Center for issuance of a Restricted Area Badge. The completed AF Form 2586 will be provided to the proposed escort along with the Restricted Area Badge. The completed form shall be returned to the Government's Security Officer. All completed AF Forms 2586 are the property of the Government and will be retained by the Government's Security Officer. A minimum of three (3) working days shall be permitted for Government processing of the AF Form 2586, Government approval of the escort, and issuance of a Restricted Area Badge. This three (3) day period does not include the time necessary for confirmation of the proposed escort's previous NAC with no break in service.

1.8.2 NEW NAC.

If the proposed escort has never been the subject of a NAC, a completed AF Form 2583, Request for Personnel Security Action (attachment 2); a completed Standard Form SF 86, Questionnaire for National Security Positions (attachment 3) original and two (2) copies; and AF Form 2586 (attachment 1) on the proposed escort shall be submitted to the Schriever AFB Security Police through the Government's Security Officer. The Contractor's Security Officer shall identify those individuals he desires to have DEO capabilities upon submission of the AF Form 2586. Upon receipt of these forms, the Schriever AFB Security Police will schedule an interview with the proposed escort for fingerprinting and reviewing of the forms. Upon completion of the interview, the Schriever AFB Security Police will perform a local files check. Upon successful completion of the NAC, the Contractor will be notified and at such time he shall complete a new AF Form 2586 and submit for approval. Upon approval, the AF Form 2586 will be returned. The Contractor will have the proposed escort hand carry the approved AF Form 2586 to the Visitor’s Center for issuance of the Restricted Area Badge. The completed AF Form 2586 will be provided to the employee along with the Restricted Area Badge. The completed form shall be returned to the Government's Security Officer. All completed AF Forms 2586 are the property of the Government and will be retained by the Government's Security Officer. A minimum of 120 calendar days shall be permitted for final approval of the proposed escort and issuance of the Restricted Area Badge. The number of new NAC's requested shall not exceed twelve for the duration of the contract.

1.9 NOT USED.

1.10 NOT USED.

1.11 TRAINING.

1.11.1 ESCORTS, ENTRY CONTROLLERS, FREE ZONE SURVEILLANCE PERSONNEL.

At a minimum, the Contractor's Security Officer shall provide initial and semi-annual training for all personnel serving as Escorts. This training shall include, as a minimum, locally established security procedures, duress procedures, entry control and escort procedures, individual security responsibilities, and security reporting and alerting system. Training plans shall be submitted when requested by the Contracting Officer to the Schriever AFB Security Police through the Contracting Officer for approval.

1.11.2 CONSTRUCTION PERSONNEL.

The Contractor shall ensure that all construction employees are knowledgeable and follow all Schriever AFB emergency procedures, to include knowledge of possible entry/exit delays due to emergencies, exercises, existence of security cordons, awaiting vehicle or pedestrian escorts, etc., which may cause base lock-outs or lock-ins or cause other temporary delays.

1.12 VEHICLE PROCEDURES.

1.12.1 PRIVATELY OWNED VEHICLES (POV).

All vehicles entering or leaving Schriever AFB are subject to search by the Schriever AFB Security Police. Alcohol and firearms or other weapons are not allowed on Schriever AFB. If any of these items found, individual may be barred from future access. All vehicles entering Schriever AFB will be required to display a vehicle pass issued at the Visitor’s Center.

1.12.2 CONSTRUCTION VEHICLES.

a. Construction vehicles shall only enter the Restricted Area via the gate designated by the Contracting Officer. Only the authorized driver shall be in the vehicle cabs upon entry or exit. The escort shall search each construction vehicle for contraband (weapons, explosives, illegal substances, etc.) prior to being allowed entry to the Restricted Area, and optionally, prior to being allowed to exit the Restricted Area. The drivers shall identify themselves to the escorts, prior to being allowed entry into the Restricted Area with their vehicle.

b. All construction vehicles shall have external markings that clearly identify their corporate or company association/ownership.

1.13 OPERATIONAL DELAYS.

Delays can be anticipated at the Entry Control Point each time an individual enters the Restricted Area. These delays are a routine matter when the Schriever AFB Security Police search vehicles and hand carried items and check badges and credentials. Delays may also be experienced if Contractor employees must wait for an escort official. The Contractor and his personnel shall immediately leave Schriever AFB upon direction by the Contracting Officer, or the Schriever AFB Security Police.

1.14 RIGHT TO DENY ENTRY.

The installation commander may deny entry into the Schriever AFB Restricted Areas to any employee whose NAC is unfavorable or who poses a security risk that may be harmful to national security interests. Additionally, the violation of, or deviation from, established security procedures by Contractor employees might result in the confiscation of Restricted Area Badges and the denial of future entry.

PART 2 PRODUCTS (NOT APPLICABLE)

PART 3 EXECUTION (NOT APPLICABLE)

-- End Of Section --

This page was intentionally left blank for duplex printing.

SECTION TABLE OF CONTENTS

DIVISION 01 - GENERAL REQUIREMENTS

SECTION 01565

(FEDERAL FACILITIES COLORADO) NPDES PERMIT REQUIREMENTS FOR STORM WATER DISCHARGES FROM CONSTRUCTION SITES

10/01

PART 1 GENERAL

1.1 REFERENCES (Not Applicable)
1.2 SUBMITTALS (Not Applicable)

PART 2 PRODUCTS (Not Applicable)

PART 3 EXECUTION

3.1 GENERAL
3.2 IMPLEMENTATION
3.2.1 Notice of Intent
3.2.2 Storm Water Pollution Prevention Plan
3.2.2.1 General
3.2.2.2 Acceptance of SWPPP
3.2.2.3 Notification of Changes
3.2.3 Posting Notice
3.2.4 Inspections and Reporting
3.2.5 Maintenance
3.2.6 Notice of Termination
3.2.7 Retention of Records
3.2.8 Continuation of Expired Permit

-- End of Section Table of Contents --

SECTION 01565

(FEDERAL FACILITIES COLORADO) NPDES PERMIT REQUIREMENTS FOR STORM WATER DISCHARGES FROM CONSTRUCTION SITES

10/01

Attachments:
Storm Water General Permit For Construction Activities
Notice of Intent
Notice of Termination

PART 1 GENERAL

1.1 REFERENCES (Not Applicable)

1.2 SUBMITTALS (Not Applicable)

PART 2 PRODUCTS (Not Applicable)

PART 3 EXECUTION

3.1 GENERAL

The Contractor shall be responsible for implementing the terms and requirements of the attached Storm Water General Permit For Construction Activities (Permit No. COR10*##F) as specified below. The Government and the Contractor shall be considered co-permittees. The Government has operational control over construction plans and specifications, including the ability to make modifications to those plans and specifications. The Contractor shall have day-to-day operational control of those activities which are necessary to ensure compliance with the requirements specified herein. The Government shall be responsible for all submissions to the EPA. The Government shall retain the official copy of all documents pertaining to compliance with the permit during construction. The project site is not located in designated critical habitat and there are no known "listed species" located in the project area.

3.2 IMPLEMENTATION

3.2.1 Notice of Intent

The Contractor shall complete and sign a Notice of Intent (NOI) in accordance with NPDES Permit No. COR10*##F. The Contractor's NOI shall be furnished to the Contracting Officer at least 7 calendar days prior to the commencement of construction activities. The Government shall submit the Contractor's and Government's NOIs to the EPA. The Government will not submit the NOIs to the EPA until the Storm Water Pollution Prevention Plan has been accepted. Copies of all NOIs shall be submitted to 50 CES/CEV. The Contractor may not begin land disturbance activities until authorized by the Contracting Officer. The Status of Owner/Operator shall be "F" for both the Contractor and the Government. The Contractor shall check the box marked (d) concerning eligibility with regard to protection of endangered species.

3.2.2 Storm Water Pollution Prevention Plan

3.2.2.1 General

The Contractor shall be responsible for preparing the Storm Water Pollution Prevention Plan (SWPPP). The SWPPP shall be submitted to 50 CES/CEV for acceptance prior to the NTP being issued. The Contractor shall be responsible for implementing, maintaining and updating the SWPPP (including Site Map) during construction. Unless otherwise indicated, the Contractor shall be responsible for implementing all measures described in the SWPPP. The Contractor shall maintain the following records and attach to the SWPPP: the dates when major grading activities occur; the dates when construction activities temporarily or permanently cease on a portion of the site; and the dates when stabilization measures are initiated. The Government shall keep the official plan at the site. The SWPPP shall be signed by the Government and the Contractor. If major changes to the SWPPP are required during construction, the SWPPP shall be recertified by the Government and the Contractor.

3.2.2.2 Acceptance of SWPPP

Acceptance of the SWPPP by CES/CEV is required prior to the start of construction. Acceptance is conditional and will be predicated on satisfactory performance during the construction. The Government reserves the right to require the Contractor to make changes to the SWPPP if the Contracting Officer determines that environmental protection requirements are not being met.

3.2.2.3 Notification of Changes

After acceptance of the SWPPP, the Contractor shall notify the Contracting Officer in writing of any proposed change. Proposed changes are subject to acceptance by the Contracting Officer.

3.2.3 Posting Notice

The Contractor shall indicate the NPDES permit number, name and telephone number of a local contact person, and a brief description of the project near the main entrance of the construction site in accordance with Part IV.B.2 of the general permit.

3.2.4 Inspections and Reporting

The Contractor shall be responsible for all inspections specified in the SWPPP and the general permit. The Contractor shall also prepare and sign all reports summarizing the inspections as required by the SWPPP and the general permit. Copies of inspection reports shall be furnished to the Contracting Officer for attachment to the SWPPP no more than 2 days after each inspection. Reports are subject to no-notice inspection by 50 CES/CEV. The Contractor shall notify the Contracting Officer within 24 hours if an inspection identifies any incidents of non-compliance with the SWPPP and the general permit.

3.2.5 Maintenance

The Contractor shall be responsible for maintaining all erosion and sediment control measures and other protective measures identified in the SWPPP in an effective operating condition. The Government reserves the right to require the Contractor to perform maintenance on erosion and

sediment control measures and other protective measures if the Contracting Officer determines that environmental protection requirements are not being met.

3.2.6 Notice of Termination

The Contractor shall notify the Contracting Officer within 24 hours after final stabilization on all portions of the site has been achieved in accordance with Part I.D.2. of the permit. The Contractor shall complete and sign a Notice of Termination (NOT) in accordance with NPDES Permit No. COR10*##F. The Contractor's NOT shall be furnished to the Contracting Officer within 5 calendar days after final stabilization (as defined in the permit) has been achieved on all portions of the site. The Government shall submit the Contractor's and Government's NOTs to the EPA. Copies of all NOTs shall be submitted to 50 CES/CEV.

3.2.7 Retention of Records

The Government shall be responsible for retaining copies of the SWPPP and all reports in accordance with NPDES Permit No. COR10*##F.

3.2.8 Continuation of Expired Permit

If the current NPDES general permit expires prior to completion of construction, the Contractor shall comply with the conditions of the new permit. -- End of Section --

UNITED STATES ENVIRONMENTAL PROTECTION AGENCY
REGION VIII
999 18TH STREET, SUITE 500
DENVER, COLORADO 80202-2466

STORM WATER GENERAL PERMIT FOR CONSTRUCTION ACTIVITIES

For Federal Facilities in the State of Colorado, except those located on Indian Country Lands

AUTHORIZATION TO DISCHARGE UNDER THE NATIONAL POLLUTANT DISCHARGE ELIMINATION SYSTEM

In compliance with the provisions of the Clean Water Act, as amended, (33 U.S.C. 1251 et.seq.), except as provided in Part I.B.3 of this permit, operators of construction activities located in an area specified in Part I.A. and who submit a Notice of Intent in accordance with Part II, are authorized to discharge pollutants to waters of the United States in accordance with the conditions and requirements set forth herein.

This permit shall become effective on February 17, 1998

This permit and the authorization to discharge shall expire at midnight, February 17, 2003

Signed and issued this 15th day of January, 1998

Kerrigan Clough

Authorized Permitting Official

Kerrigan G. Clough, Assistant Regional Administrator
Office of Pollution Prevention, State and Tribal Assistance
Title

NOTE-THIS PAGE WILL BE REPLACED BY COPY OF SIGNED PAGE

UNITED STATES ENVIRONMENTAL PROTECTION AGENCY
REGION VIII
999 18TH STREET, SUITE 500
DENVER, COLORADO 80202-2466

STORM WATER GENERAL PERMIT FOR CONSTRUCTION ACTIVITIES

For Federal Facilities in the State of Colorado, except those located on Indian Country Lands

AUTHORIZATION TO DISCHARGE UNDER THE
NATIONAL POLLUTANT DISCHARGE ELIMINATION SYSTEM

In compliance with the provisions of the Clean Water Act, as amended, (33 U.S.C. 1251 et.seq.), except as provided in Part I.B.3 of this permit, operators of construction activities located in an area specified in Part I.A. and who submit a Notice of Intent in accordance with Part II, are authorized to discharge pollutants to waters of the United States in accordance with the conditions and requirements set forth herein.

This permit shall become effective on **February 17, 1998**

This permit and the authorization to discharge shall expire at midnight, **February 17, 2003**

Signed and issued this 15th day of January, 1998

_____
Authorized Permitting Official

Kerrigan G. Clough, Assistant Regional Administrator
Office of Pollution Prevention, State and Tribal Assistance
Title

NPDES GENERAL PERMIT FOR STORM WATER DISCHARGES FROM CONSTRUCTION ACTIVITIES

TABLE OF CONTENTS

Preface 4

Part I. COVERAGE UNDER THIS PERMIT 4
A. Permit Area 4
B. Eligibility 4
C. Obtaining Authorization 7
D. Terminating Coverage 7

Part II. NOTICE OF INTENT REQUIREMENTS 8
A. Deadlines for Notification 8
B. Contents of Notice of Intent 9
C. Where to Submit 10

Part III. SPECIAL CONDITIONS, MANAGEMENT PRACTICES, AND OTHER NON-NUMERIC LIMITATIONS 11
A. Prohibition on Non-Storm Water Discharges 11
B. Releases in Excess of Reportable Quantities 11
C. Spills 11
D. Discharge Compliance with Water Quality Standards 11
E. Responsibilities of Operators 12

Part IV. STORM WATER POLLUTION PREVENTION PLANS 13
A. Deadlines for Plan Preparation and Compliance 13
B. Signature, Plan Review and Making Plans Available 13
C. Keeping Plans Current 14
D. Contents of Plan 14

Part V. RETENTION OF RECORDS 21
A. Documents 21
B. Accessibility 21
C. Addresses 21

Part VI. STANDARD PERMIT CONDITIONS 22
A. Duty to Comply 22
B. Continuation of the Expired General Permit 23
C. Need to Halt or Reduce Activity not a Defense 23
D. Duty to Mitigate 23
E. Duty to Provide Information. 23
F. Other Information 23
G. Signatory Requirements 23
H. Penalties for Falsification of Reports 25
I. Oil and Hazardous Substance Liability 25
J. Property Rights 25
K. Severability 25
L. Requiring an Individual Permit or an Alternative General Permit 25
M. State/Tribal Environmental Laws 26

Part VI. STANDARD PERMIT CONDITIONS (Continued)
N. Proper Operation and Maintenance 26
O. Inspection and Entry 26
P. Permit Actions 26

Part VII. REOPENER CLAUSE 26

Part VIII. TERMINATION OF COVERAGE 27
A. Notice of Termination 27
B. Addresses 27

Part IX. DEFINITIONS 28

ADDENDA
A. ENDANGERED SPECIES 31
B. HISTORIC PROPERTIES (RESERVED) 44
C. NOTICE OF INTENT (NOI) FORM 45
D. NOTICE OF TERMINATION (NOT) FORM 47

Preface

EPA's reissued construction general permits (CGP) were published in the Federal Register on February 17, 1998 (see 63 FR 7857). That document included the conditions for 38 separate permits involving 7 different Regions of EPA. Seven of those permits involve EPA Region VIII and this permit is one of them. In order to make this permit easier to read and understand, it has been reformatted from the style used in the Federal Register and limited to conditions and information that only apply to the area covered by this permit. References, conditions and information pertaining to all other Regions, States and Tribes that were included in the Federal Register, but not applicable to the areas covered by this permit, were removed. The conditions in this permit mimic the permits published in the Federal Register in all other ways. Persons that want CGP information for areas not covered by this permit should refer to the February 17, 1998 Federal Register or one of the other permits prepared by EPA Region VIII.

Part I. COVERAGE UNDER THIS PERMIT

A. Permit Area.

Federal Facilities in the State of Colorado, except those located on Indian Country lands.

B. Eligibility.

1. Permittees are authorized to discharge pollutants in storm water runoff associated with construction activities as defined in 40 CFR 122.26(b)(14)(x) and those construction site discharges designated by the Director as needing a storm water permit under 122.26(a)(1)(v) or under 122.26(a)(9) and 122.26(g)(1)(i). Discharges identified under Part I.B.3 are excluded from coverage. Any discharge authorized by a different NPDES permit may be commingled with discharges authorized by this permit.

2. This permit also authorizes storm water discharges from support activities (e.g., concrete or asphalt batch plants, equipment staging yards, material storage areas, excavated material disposal areas, borrow areas) provided:

   a. the support activity is directly related to a construction site that is required to have NPDES permit coverage for discharges of storm water associated with construction activity;

   b. the support activity is not a commercial operation serving multiple unrelated construction projects by different operators, and does not operate beyond the completion of the construction activity at the last construction project it supports; and

   c. appropriate controls and measures are identified in a storm water pollution prevention plan covering the discharges from the support activity areas.

3. Limitations on Coverage.

a. Post Construction Discharges. This permit does not authorize storm water discharges that originate from the site after construction activities have been completed and the site, including any temporary support activity site, has undergone final stabilization. Industrial post-construction storm water discharges may need to be covered by a separate NPDES permit.

b. Discharges Mixed with Non-Storm Water. This permit does not authorize discharges that are mixed with sources of non-storm water, other than those discharges which are identified in Part III.A.2. or 3. (exceptions to prohibition on non-storm water discharges) and are in compliance with Part IV.D.5 (non-storm water discharges).

c. Discharges Covered by Another Permit. This permit does not authorize storm water discharges associated with construction activity that have been covered under an individual permit or required to obtain coverage under an alternative general permit in accordance with Part VI.L.

d. Discharges Threatening Water Quality. This permit does not authorize storm water discharges from construction sites that the Director (EPA) determines will cause, or have reasonable potential to cause or contribute to, violations of water quality standards. Where such determinations have been made, the Director may notify the operator(s) that an individual permit application is necessary in accordance with Part VI.L. However, the Director may authorize coverage under this permit after appropriate controls and implementation procedures designed to bring the discharges into compliance with water quality standards have been included in the storm water pollution prevention plan;

e. Storm water discharges and storm water discharge-related activities that are not protective of Federally listed endangered and threatened ("listed") species or designated critical habitat ("critical habitat").

(1) For the purposes of complying with the Part I.B.3.e. eligibility requirements, "storm water discharge-related activities" include:

(a) activities which cause, contribute to, or result in point source storm water pollutant discharges, including but not limited to: excavation, site development, grading and other surface disturbance activities; and

(b) measures to control storm water including the siting, construction and operation of best management practices (BMPs) to control, reduce or prevent storm water pollution.

(2) Coverage under this permit is available only if the applicant certifies that it meets at least one of the criteria in paragraphs (a)-(d) below. Failure to continue to meet one of these criteria during the term of the permit will render a permittee ineligible for coverage under this permit.

(a) The storm water discharges and storm water discharge-related activities are not likely to adversely affect listed species or critical habitat; or

(b) Formal or informal consultation with the Fish and Wildlife Service and/or the National Marine Fisheries Service (the "Services") under section 7 of the Endangered Species Act (ESA) has been concluded which addresses the effects of the applicant's storm water discharges and storm water discharge-related activities on listed species and critical

3. Limitations on Coverage. (Continued)

habitat and the consultation results in either a no jeopardy opinion or a written concurrence by the Service(s) on a finding that the applicant's storm water discharges and storm water discharge-related activities are not likely to adversely affect listed species or critical habitat. A section 7 consultation may occur in the context of another Federal action (e.g., a ESA section 7 consultation was performed for issuance of a wetlands dredge and fill permit for the project, or as part of a National Environmental Policy Act (NEPA) review); or

(c) The applicant's construction activities are authorized under section 10 of the ESA and that authorization addresses the effects of the applicant's storm water discharges and storm water discharge-related activities on listed species and critical habitat; or

(d) The applicant's storm water discharges and storm water discharge-related activities were already addressed in another operator's certification of eligibility under Part I.B.3.e.(2)(a), (b), or (c) which included the applicant's project area. By certifying eligibility under Part I.B.3.e.(2)(d), the applicant agrees to comply with any measures or controls upon which the other operator's certification under Part I.B.3.e.(2)(a), (b) or (c) was based.

(3) All applicants must follow the procedures provided at Addendum A of this permit when applying for permit coverage.

(4) The applicant must comply with any applicable terms, conditions or other requirements developed in the process of meeting eligibility requirements of Part I.B.3.e.(2)(a), (b), (c), or (d) above to remain eligible for coverage under this permit. Such terms and conditions must be incorporated in the applicant's storm water pollution prevention plan.

(5) Applicants who choose to conduct informal consultation to meet the eligibility requirements of Part I.B.3.e.(2)(b) are automatically designated as non-Federal representatives under this permit. See 50 CFR 402.08. Applicants who choose to conduct informal consultation as a non-Federal representatives must notify EPA and the appropriate Service office in writing of that decision.

(6) This permit does not authorize any storm water discharges where the discharges or storm water discharge-related activities cause prohibited "take" (as defined under section 3 of the Endangered Species Act and 50 CFR 17.3) of endangered or threatened species unless such takes are authorized under sections 7 or 10 of the Endangered Species Act.

(7) This permit does not authorize any storm water discharges where the discharges or storm water discharge-related activities are likely to jeopardize the continued existence of any species that are listed or proposed to be listed as endangered or threatened under the ESA or result in the adverse modification or destruction of habitat that is designated or proposed to be designated as critical under the ESA.

f. <u>Storm water Discharges and Storm Water Discharge-Related Activities with Unconsidered Adverse Effects on Historic Properties</u>. (Reserved)

C. Obtaining Authorization.

1. In order for storm water discharges from construction activities to be authorized under this general permit, an operator must:

   a. meet the Part I.B eligibility requirements;

   b. except as provided in Parts II.A.5 and II.A.6, develop a storm water pollution prevention plan (SWPPP) covering either the entire site or all portions of the site for which they are operators (see definition in Part IX.N) according to the requirements in Part IV. A "joint" SWPPP may be developed and implemented as a cooperative effort where there is more than one operator at a site; and

   c. submit a Notice of Intent (NOI) in accordance with the requirements of Part II, using an NOI form provided by the Director (or a photocopy thereof, see Addendum C, page 45). Only one NOI need be submitted to cover all of the permittee's activities on the common plan of development or sale (e.g., you do not need to submit a separate NOI for each separate lot in a residential subdivision or for two separate buildings being constructed at a manufacturing facility, provided your SWPPP covers each area for which you are an operator). The SWPPP must be implemented upon commencement of construction activities.

2. Any new operator on site, including those who replace an operator who has previously obtained permit coverage, must submit an NOI to obtain permit coverage.

3. Unless notified by the Director to the contrary, operators who submit a correctly completed NOI in accordance with the requirements of this permit are authorized to discharge storm water from construction activities under the terms and conditions of this permit two (2) days after the date that the NOI is postmarked. The Director may deny coverage under this permit and require submittal of an application for an individual NPDES permit based on a review of the NOI or other information (see Part VI.L).

D. Terminating Coverage.

1. Permittees wishing to terminate coverage under this permit must submit a Notice of Termination (NOT) in accordance with Part VIII of this permit (see Addendum D, page 47). Compliance with this permit is required until an NOT is submitted. The permittee's authorization to discharge under this permit terminates at midnight of the day the NOT is signed.

2. All permittees must submit an NOT within thirty (30) days after one or more of the following conditions have been met:

   a. final stabilization (see definition Part IX.I) has been achieved on all portions of the site for which the permittee is responsible (including if applicable, returning agricultural land to its pre-construction agricultural use);

   b. another operator/permittee has assumed control according to Part VI.G.2.c. over all areas of the site that have not been finally stabilized; or

D. Terminating Coverage. (Continued)

c. for residential construction only, temporary stabilization has been completed and the residence has been transferred to the homeowner.

Enforcement actions may be taken if a permittee submits an NOT without meeting one or more of these conditions.

Part II. NOTICE OF INTENT REQUIREMENTS

A. Deadlines for Notification.

1. Except as provided in Parts II.A.3, II.A.4, II.A.5 or II.A.6 below, parties defined as operators (see definition in Part IX.N) due to their operational control over construction plans and specifications, including the ability to make modifications to those plans and specifications, must submit a Notice of Intent (NOI) in accordance with the requirements of this Part at least two (2) days prior to the commencement of construction activities (i.e., the initial disturbance of soils associated with clearing, grading, excavation activities, or other construction activities).

2. Except as provided in Parts II.A.3, II.A.4, II.A.5 or II.A.6 below, parties defined as operators (see definition in Part IX.N) due to their day-to-day operational control over activities at a project which are necessary to ensure compliance with a storm water pollution prevention plan or other permit conditions (e.g., general contractor, erosion control contractor) must submit an NOI at least two (2) days prior to commencing work on-site.

3. For storm water discharges from construction projects where the operator changes, including instances where an operator is added after an NOI has been submitted under Parts II.A.1 or II.A.2, the new operator must submit an NOI at least two (2) days before assuming operational control over site specifications or commencing work on-site.

4. Operators are not prohibited from submitting late NOIs. When a late NOI is submitted, authorization is only for discharges that occur after permit coverage is granted. The Agency reserves the right to take appropriate enforcement actions for any unpermitted activities that may have occurred between the time construction commenced and authorization of future discharges is granted (typically 2 days after a complete NOI is submitted).

5. Operators of on-going construction projects as of the effective date of this permit which received authorization to discharge for these projects under the 1992 baseline construction general permit must:

   a. submit an NOI according to Part II.B. within 90 days of the effective date of this permit. If the permittee is eligible to submit a Notice of Termination (e.g., construction is finished and final stabilization has been achieved) before the 90th day, a new NOI is not required to be submitted;

   b. for the first 90 days from the effective date of this permit, comply with the terms and conditions of the 1992 baseline construction general permit they were previously authorized under; and

   c. update their storm water pollution prevention plan to comply with the requirements of Part IV within 90 days after the effective date of this permit.

A. **Deadlines for Notification.** (Continued)

6. Operators of on-going construction projects as of the effective date of this permit which did **not** receive authorization to discharge for these projects under the 1992 baseline construction general permit must:

   a. prepare and comply with an interim storm water pollution prevention plan in accordance with the 1992 baseline construction general permit prior to submitting an NOI;

   b. submit a NOI according to Part II.B; and

   c. update their storm water pollution prevention plan to comply with the requirements of Part IV within 90 days after the effective date of this permit.

B. **Contents of Notice of Intent (NOI).**

1. The NOI form shall be signed in accordance with Part VI.G of this permit and shall include the following information:

   a. the name, address, and telephone number of the operator filing the NOI for permit coverage;

   b. an indication of whether the operator is a Federal, State, Tribal, private, or other public entity;

   NOTE: All projects on Federal Facilities in Colorado must have an "F" in the Status of Owner/Operator box on the NOI. Even private contracting companies must put an "F" in that box so that we can tell its a Federal Facility project, thus regulated by EPA not the State of Colorado.

   c. the name (or other identifier), address, county, and latitude/longitude of the construction project or site;

   d. an indication of whether the project or site is located on Indian Country lands;

   e. confirmation that a storm water pollution prevention plan (SWPPP) has been developed or will be developed prior to commencing construction activities, and that the SWPPP will be compliant with any applicable local sediment and erosion control plans. Copies of SWPPPs or permits should not be included with the NOI submission;

   f. optional information: the location where the SWPPP may be viewed and the name and telephone number of a contact person for scheduling viewing times;

   g. the name of nearest named the receiving water(s);

   h. estimates of project start and completion dates, and estimates of the number of acres of the site on which soil will be disturbed (if less than 1 acre, enter "1");

   i. based on the instructions in Addendum A, whether any listed or proposed threatened or endangered species, or designated critical habitat, are in proximity to the storm water discharges or storm water discharge-related activities to be covered by this permit; and

B. Contents of Notice of Intent (NOI). (Continued)

j. under which section(s) of Part I.B.3.e. (Endangered Species) the applicant is certifying eligibility.

Note that as of the effective date of this permit, reporting of information relating to the preservation of historic properties has been reserved and is not required at this time. Such reservation in no way relieves applicants or permittees from any otherwise applicable obligations or liabilities related to historic preservation under State, Tribal or local law. After further discussions between EPA and the Advisory Council on Historic Preservation, the Agency may modify the permit. Any such modification may affect future Notice of Intent reporting requirements.

C. Where to Submit.

1. NOIs must be signed in accordance with Part VI.G. and sent to the following address:

Storm Water Notice of Intent (4203)
US EPA
401 M. Street, SW
Washington, D.C. 20460

Part III. SPECIAL CONDITIONS, MANAGEMENT PRACTICES, AND OTHER NON-NUMERIC LIMITATIONS

A. Prohibition on Non-Storm Water Discharges.

1. Except as provided in Parts I.B.2 or 3 and III.A.2 or 3, all discharges covered by this permit shall be composed entirely of storm water associated with construction activity.

2. Discharges of material other than storm water that are in compliance with an NPDES permit (other than this permit) issued for that discharge may be discharged or mixed with discharges authorized by this permit.

3. The following non-storm water discharges from active construction sites are authorized by this permit provided the non-storm water component of the discharge is in compliance with Part IV.D.5 (non-storm water discharges): discharges from fire fighting activities; fire hydrant flushings; waters used to wash vehicles where detergents are not used; water used to control dust in accordance with Part IV.D.2.c.(2); potable water sources including waterline flushings; routine external building wash down which does not use detergents; pavement washwaters where spills or leaks of toxic or hazardous materials have not occurred (unless all spilled material has been removed) and where detergents are not used; air conditioning condensate; uncontaminated ground water or spring water; and foundation or footing drains where flows are not contaminated with process materials such as solvents.

B. Releases in Excess of Reportable Quantities. The discharge of hazardous substances or oil in the storm water discharge(s) from a facility shall be prevented or minimized in accordance with the applicable storm water pollution prevention plan for the facility. This permit does not relieve the permittee of the reporting requirements of 40 CFR 110, 40 CFR 117 and 40 CFR 302. Where a release containing a hazardous substance or oil in an amount equal to or in excess of a reportable quantity established under either 40 CFR 110, 40 CFR 117 or 40 CFR 302, occurs during a 24 hour period:

1. The permittee is required to notify the National Response Center (NRC) (800-424-8802; in the Washington, DC, metropolitan area call 202-426-2675) in accordance with the requirements of 40 CFR 110, 40 CFR 117 and 40 CFR 302 as soon as he or she has knowledge of the discharge;

2. The storm water pollution prevention plan required under Part IV of this permit must be modified within 14 calendar days of knowledge of the release to: provide a description of the release, the circumstances leading to the release, and the date of the release. In addition, the plan must be reviewed to identify measures to prevent the reoccurrence of such releases and to respond to such releases, and the plan must be modified where appropriate.

C. Spills. This permit does not authorize the discharge of hazardous substances or oil resulting from an on-site spill.

D. Discharge Compliance with Water Quality Standards. Operators seeking coverage under this permit shall not be causing or have the reasonable potential to cause or contribute to a violation of a water quality standard. Where a discharge is already authorized under this permit and is later determined to cause or have the reasonable potential to cause or contribute to the violation of an applicable water quality standard, the Director will notify the operator of such violation(s). The permittee shall take all necessary actions to ensure future discharges do not cause or contribute to the violation of a water quality standard and document these actions in the storm water pollution prevention plan. If violations remain or

D. Discharge Compliance with Water Quality Standards. (Continued)

re-occur, then coverage under this permit may be terminated by the Director, and an alternative general permit or individual permit may be issued. Compliance with this requirement does not preclude any enforcement activity as provided by the Clean Water Act for the underlying violation.

E. Responsibilities of Operators. Permittees may meet one or both of the operational control components in the definition of "operator" found in Part IX.N. Either Parts III.E.1 or III.E.2 or both will apply depending on the type of operational control exerted by an individual permittee. Part III.E.3 applies to all permittees.

1. Permittees with operational control over construction plans and specifications, including the ability to make modifications to those plans and specifications (e.g., developer or owner), must:

   a. ensure the project specifications that they develop meet the minimum requirements of Part IV (Storm Water Pollution Prevention Plans (SWPPP)) and all other applicable conditions;

   b. ensure that the SWPPP indicates the areas of the project where they have operational control over project specifications (including the ability to make modifications in specifications), and ensure all other permittees implementing portions of the SWPPP impacted by any changes they make to the plan are notified of such modifications in a timely manner; and

   c. ensure that the SWPPP for portions of the project where they are operators indicates the name and NPDES permit number for parties with day-to-day operational control of those activities necessary to ensure compliance with the SWPPP or other permit conditions. If these parties have not been identified at the time the SWPPP is initially developed, the permittee with operational control over project specifications shall be considered to be the responsible party until such time as the authority is transferred to another party (e.g., general contractor) and the plan updated.

2. Permittee(s) with day-to-day operational control of those activities at a project which are necessary to ensure compliance with a SWPPP for the site or other permit conditions (e.g., general contractor) must:

   a. ensure that the SWPPP for portions of the project where they are operators meets the minimum requirements of Part IV (Storm Water Pollution Prevention Plan) and identifies the parties responsible for implementation of control measures identified in the plan;

   b. ensure that the SWPPP indicates areas of the project where they have operational control over day-to-day activities;

   c. ensure that the SWPPP for portions of the project where they are operators indicates the name and NPDES permit number of the party(ies) with operational control over project specifications (including the ability to make modifications in specifications);

3. Permittees with operational control over only a portion of a larger construction project (e.g., one of four homebuilders in a subdivision) are responsible for compliance with all applicable terms and conditions of this permit as it relates to their activities on their portion of the construction site, including protection of endangered species and implementation of BMPs and other controls required by the SWPPP. Permittees shall ensure either directly or through coordination with other permittees, that their activities do not render another party's pollution controls ineffective. Permittees must either implement their portions of a common SWPPP or develop and implement their own SWPPP.

Part IV. STORM WATER POLLUTION PREVENTION PLANS

At least one storm water pollution prevention plan (SWPPP) shall be developed for each construction project or site covered by this permit. For more effective coordination of BMPs and opportunities for cost sharing, a cooperative effort by the different operators at a site to prepare and participate in a comprehensive SWPPP is encouraged. Individual operators at a site may, but are not required, to develop separate SWPPPs that cover only their portion of the project provided reference is made to other operators at the site. In instances where there is more than one SWPPP for a site, coordination must be conducted between the permittees to ensure the storm water discharge controls and other measures are consistent with one another (e.g., provisions to protect listed species and critical habitat).

Storm water pollution prevention plans shall be prepared in accordance with good engineering practices. The SWPPP shall identify potential sources of pollution which may reasonably be expected to affect the quality of storm water discharges from the construction site. The SWPPP shall describe and ensure the implementation of practices which will be used to reduce the pollutants in storm water discharges associated with construction activity at the construction site and assure compliance with the terms and conditions of this permit.

When developing SWPPPs, applicants must follow the procedures in Addendum A of this permit to determine whether listed endangered or threatened species or critical habitat would be affected by the applicant's storm water discharges or storm water discharge-related activities. Any information on whether listed species or critical habitat are found in proximity to the construction site must be included in the SWPPP. Any terms or conditions that are imposed under the eligibility requirements of Part I.B.3.e and Addendum A of this permit to protect listed species or critical habitat from storm water discharges or storm water discharge-related activity must be incorporated into the SWPPP. Permittees must implement the applicable provisions of the SWPPP required under this part as a condition of this permit.

A. **Deadlines for Plan Preparation and Compliance.** The storm water pollution prevention plan shall:

1. be completed prior to the submittal of an NOI to be covered under this permit (except as provided in Parts II.A.5 and II.A.6) updated as appropriate; and

2. provide for compliance with the terms and schedule of the SWPPP beginning with the initiation of construction activities.

B. **Signature, Plan Review and Making Plans Available.**

1. The SWPPP shall be signed in accordance with Part VI.G, and be retained on-site at the facility which generates the storm water discharge in accordance with Part V (Retention of Records) of this permit.

2. The permittee shall post a notice near the main entrance of the construction site with the following information:

   a. the NPDES permit number for the project or a copy of the NOI if a permit number has not yet been assigned;

   b. the name and telephone number of a local contact person;

   c. a brief description of the project; and

B. Signature, Plan Review and Making Plans Available. (Continued)

d. the location of the SWPPP if the site is inactive or does not have an on-site location to store the plan.

If posting this information near a main entrance is infeasible due to safety concerns, the notice shall be posted in a local public building. If the construction project is a linear construction project (e.g., pipeline, highway, etc.), the notice must be placed in a publicly accessible location near where construction is actively underway and moved as necessary. This permit does not provide the public with any right to trespass on a construction site for any reason, including inspection of a site; nor does this permit require that permittees allow members of the public access to a construction site.

3. The permittee shall make SWPPPs available upon request to the Director, a State, Tribal or local agency approving sediment and erosion plans, grading plans, or storm water management plans; local government officials; or the operator of a municipal separate storm sewer receiving discharges from the site. The copy of the SWPPP that is required to be kept on-site or locally available must be made available to the Director for review at the time of an on-site inspection. Also, in the interest of public involvement, EPA encourages permittees to make their SWPPPs available to the public for viewing during normal business hours.

4. The Director may notify the permittee at any time that the SWPPP does not meet one or more of the minimum requirements of this Part. Such notification shall identify those provision of this permit which are not being met by the SWPPP as well as those requiring modification in order to meet the minimum requirements of this Part. Within seven (7) calendar days of receipt of such notification from the Director (or as otherwise provided by the Director), the permittee shall make the required changes to the SWPPP and shall submit to the Director a written certification that the requested changes have been made. The Director may take appropriate enforcement action for the period of time the permittee was operating under a plan that did not meet the minimum requirements of this permit.

C. Keeping Plans Current. The permittee must amend the storm water pollution prevention plan whenever:

1. There is a change in design, construction, operation, or maintenance which has a significant effect on the discharge of pollutants to the waters of the United States which has not been addressed in the SWPPP; or

2. Inspections or investigations by site operators, local, State, Tribal or Federal officials indicate the SWPPP is proving ineffective in eliminating or significantly minimizing pollutants from sources identified under Part IV.D.1 of this permit, or is otherwise not achieving the general objectives of controlling pollutants in storm water discharges associated with construction activity.

D. Contents of Plan. The storm water pollution prevention plan (SWPPP) shall include the following items:

1. **Site Description.** Each SWPPP shall provide a description of potential pollutant sources and other information as indicated below:

a. a description of the nature of the construction activity;

1. **Site Description.** (Continued)

   b. a description of the intended sequence of major activities which disturb soils for major portions of the site (e.g., grubbing, excavation, grading, utilities and infrastructure installation);

   c. estimates of the total area of the site and the total area of the site that is expected to be disturbed by excavation, grading, or other activities including off-site borrow and fill areas;

   d. an estimate of the runoff coefficient of the site for both the pre-construction and post-construction conditions and data describing the soil or the quality of any discharge from the site;

   e. a general location map (e.g., a portion of a city or county map) and a site map indicating the following: drainage patterns and approximate slopes anticipated after major grading activities; areas of soil disturbance; areas which will not be disturbed; locations of major structural and nonstructural controls identified in the SWPPP; locations where stabilization practices are expected to occur; locations of off-site material, waste, borrow or equipment storage areas; surface waters (including wetlands); and locations where storm water discharges to a surface water;

   f. location and description of any discharge associated with industrial activity other than construction, including storm water discharges from dedicated asphalt plants and dedicated concrete plants, which is covered by this permit;

   g. the name of the receiving water(s) and the areal extent and description of wetland or other special aquatic sites (as described under 40 CFR 230.3(q-1)) at or near the site which will be disturbed or which will receive discharges from disturbed areas of the project;

   h. a copy of the permit requirements (attaching a copy of this permit is acceptable); and

   i. information on whether listed endangered or threatened species, or critical habitat, are found in proximity to the construction activity and whether such species may be affected by the applicant's storm water discharges or storm water discharge-related activities.

2. **Controls.** Each SWPPP shall include a description of appropriate control measures (i.e., BMPs) that will be implemented as part of the construction activity to control pollutants in storm water discharges. The SWPPP must clearly describe for each major activity identified in Part IV.D.1.b: **a)** appropriate control measures and the general timing (or sequence) during the construction process that the measures will be implemented; and **b)** which permittee is responsible for implementation (e.g., perimeter controls for one portion of the site will be installed by Contractor A after the clearing and grubbing necessary for installation of the measure, but before the clearing and grubbing for the remaining portions of the site; and perimeter controls will be actively maintained by Contractor B until final stabilization of those portions of the site up-gradient of the perimeter control; and temporary perimeter controls will be removed by the owner after final stabilization). The description and implementation of control measures shall address the following minimum components:

   a. <u>Erosion and Sediment Controls.</u>

      (1) *Short and Long Term Goals and Criteria*:

         (a) The construction-phase erosion and sediment controls should be designed to retain sediment on site to the extent practicable.

(1) *Short and Long Term Goals and Criteria*: (Continued)

(b) All control measures must be properly selected, installed, and maintained in accordance with the manufacturers specifications and good engineering practices. If periodic inspections or other information indicates a control has been used inappropriately, or incorrectly, the permittee must replace or modify the control for site situations.

(c) If sediment escapes the construction site, off-site accumulations of sediment must be removed at a frequency sufficient to minimize offsite impacts (e.g., fugitive sediment in street could be washed into storm sewers by the next rain and/or pose a safety hazard to users of public streets).

(d) Sediment must be removed from sediment traps or sedimentation ponds when design capacity has been reduced by 50%.

(e) Litter, construction debris, and construction chemicals exposed to storm water shall be prevented from becoming a pollutant source for storm water discharges (e.g., screening outfalls, picked up daily).

(f) Offsite material storage areas (also including overburden and stockpiles of dirt, borrow areas, etc.) used solely by the permitted project are considered a part of the project and shall be addressed in the SWPPP.

(2) *Stabilization Practices*: The SWPPP must include a description of interim and permanent stabilization practices for the site, including a schedule of when the practices will be implemented. Site plans should ensure that existing vegetation is preserved where attainable and that disturbed portions of the site are stabilized. Stabilization practices may include but are not limited to: establishment of temporary vegetation, establishment of permanent vegetation, mulching, geotextiles, sod stabilization, vegetative buffer strips, protection of trees, preservation of mature vegetation, and other appropriate measures. Use of impervious surfaces for stabilization should be avoided.

The following records shall be maintained and attached to the SWPPP: the dates when major grading activities occur; the dates when construction activities temporarily or permanently cease on a portion of the site; and the dates when stabilization measures are initiated.

Except as provided in Parts IV.D.2.a.(2)(a), (b), and (c) below, stabilization measures shall be initiated as soon as practicable in portions of the site where construction activities have temporarily or permanently ceased, but in no case more than 14 days after the construction activity in that portion of the site has temporarily or permanently ceased.

(a) Where the initiation of stabilization measures by the 14th day after construction activity temporary or permanently cease is precluded by snow cover or frozen ground conditions, stabilization measures shall be initiated as soon as practicable.

(b) Where construction activity on a portion of the site is temporarily ceased, and earth disturbing activities will be resumed within 21 days, temporary stabilization measures do not have to be initiated on that portion of site.

(2) *Stabilization Practices*: (Continued)

(c) In arid areas (areas with an average annual rainfall of 0 to 10 inches), semi-arid areas (areas with an average annual rainfall of 10 to 20 inches), and areas experiencing droughts where the initiation of stabilization measures by the 14th day after construction activity has temporarily or permanently ceased is precluded by seasonal arid conditions, stabilization measures shall be initiated as soon as practicable.

(3) *Structural Practices:* The SWPPP must include a description of structural practices to divert flows from exposed soils, store flows or otherwise limit runoff and the discharge of pollutants from exposed areas of the site to the degree attainable. Structural practices may include but are not limited to: silt fences, earth dikes, drainage swales, sediment traps, check dams, subsurface drains, pipe slope drains, level spreaders, storm drain inlet protection, rock outlet protection, reinforced soil retaining systems, gabions, and temporary or permanent sediment basins. Placement of structural practices in floodplains should be avoided to the degree attainable. The installation of these devices may be subject to section 404 of the CWA.

(a) For common drainage locations that serve an area with ten (10) or more acres disturbed at one time, a temporary (or permanent) sediment basin that provides storage for a calculated volume of runoff from a 2 year, 24 hour storm from each disturbed acre drained, or equivalent control measures, shall be provided where attainable until final stabilization of the site. Where no such calculation has been performed, a temporary (or permanent) sediment basin providing 3,600 cubic feet of storage per acre drained, or equivalent control measures, shall be provided where attainable until final stabilization of the site. When computing the number of acres draining into an common location it is not necessary to include flows from offsite areas and flows from onsite areas that are either undisturbed or have undergone final stabilization where such flows are diverted around both the disturbed area and the sediment basin.

In determining whether installing a sediment basin is attainable, the permittee may consider factors such as site soils, slope, available area on site, etc. In any event, the permittee must consider public safety, especially as it relates to children, as a design factor for the sediment basin and alternative sediment controls shall be used where site limitations would a preclude a safe design. For drainage locations which serve ten (10) or more disturbed acres at one time and where a temporary sediment basin or equivalent controls is not attainable, smaller sediment basins and/or sediment traps should be used. Where neither the sediment basin nor equivalent controls are attainable due to site limitations, silt fences, vegetative buffer strips, or equivalent sediment controls are required for all down slope boundaries of the construction area and for those side slope boundaries deemed appropriate as dictated by individual site conditions. EPA encourages the use of a combination of sediment and erosion control measures in order to achieve maximum pollutant removal.

(b) For drainage locations serving less than 10 acres, smaller sediment basins and/or sediment traps should be used. At a minimum, silt fences, vegetative buffer strips, or equivalent sediment controls are required for all down slope boundaries (and for those side slope boundaries deemed appropriate as dictated by individual site conditions) of the construction area unless a sediment basin providing storage for a calculated volume

(3) *Structural Practices*: (Continued)

of runoff from a 2 year, 24 hour storm or 3,600 cubic feet of storage per acre drained is provided. EPA encourages the use of a combination of sediment and erosion control measures in order to achieve maximum pollutant removal.

b. Storm Water Management. A description of measures that will be installed during the construction process to control pollutants in storm water discharges that will occur after construction operations have been completed must be included in the SWPPP. Structural measures should be placed on upland soils to the degree attainable. The installation of these devices may also require a separate permit under section 404 of the CWA. Permittees are only responsible for the installation and maintenance of storm water management measures prior to final stabilization of the site, and are not responsible for maintenance after storm water discharges associated with construction activity have been eliminated from the site. However, post-construction storm water BMPs that discharge pollutants from point sources once construction is completed, may in themselves, need authorization under a separate NPDES permit.

(1) Such practices may include but are not limited to: storm water detention structures (including wet ponds); storm water retention structures; flow attenuation by use of open vegetated swales and natural depressions; infiltration of runoff onsite; and sequential systems (which combine several practices). The SWPPP shall include an explanation of the technical basis used to select the practices to control pollution where flows exceed predevelopment levels.

(2) Velocity dissipation devices shall be placed at discharge locations and along the length of any outfall channel to provide a non-erosive flow velocity from the structure to a water course so that the natural physical and biological characteristics and functions are maintained and protected (e.g. no significant changes in the hydrological regime of the receiving water).

c. Other Controls.

(1) No solid materials, including building materials, shall be discharged to waters of the United States, except as authorized by a permit issued under section 404 of the CWA.

(2) Off-site vehicle tracking of sediments and the generation of dust shall be minimized.

(3) The SWPPP shall be consistent with applicable State, Tribal and/or local waste disposal, sanitary sewer or septic system regulations to the extent these are located within the permitted area.

(4) The SWPPP shall include a description of construction and waste materials expected to be stored on-site with updates as appropriate. The SWPPP shall also include a description of controls to reduce pollutants from these materials including storage practices to minimize exposure of the materials to storm water, and spill prevention and response.

(5) The SWPPP shall include a description of pollutant sources from areas other than construction (including storm water discharges from dedicated asphalt plants and dedicated concrete plants), and a description of controls and measures that will be implemented at those sites to minimize pollutant discharges.

c. Other Controls. (Continued)

(6) The SWPPP shall include a description of measures necessary to protect listed endangered or threatened species, or critical habitat, including any terms or conditions that are imposed under the eligibility requirements of Part I.B.3.e (4) of this permit. Failure to describe and implement such measures will result in storm water discharges from construction activities that are ineligible for coverage under this permit.

d. Approved State, Tribal or Local Plans.

(1) Permittees which discharge storm water associated with construction activities must ensure their storm water pollution prevention plan is consistent with requirements specified in applicable sediment and erosion site plans or site permits, or storm water management site plans or site permits approved by State, Tribal, or local officials.

(2) Storm water pollution prevention plans must be updated as necessary to remain consistent with any changes applicable to protecting surface water resources in sediment and erosion site plans or site permits, or storm water management site plans or site permits approved by State, Tribal or local officials for which the permittee receives written notice..

3. **Maintenance.** All erosion and sediment control measures and other protective measures identified in the SWPPP must be maintained in effective operating condition. If site inspections required by Part IV.D.4. identify BMPs that are not operating effectively, maintenance shall be performed before the next anticipated storm event, or as necessary to maintain the continued effectiveness of storm water controls. If maintenance prior to the next anticipated storm event is impracticable, maintenance must be scheduled and accomplished as soon as practicable.

4. **Inspections.** Qualified personnel (provided by the permittee or cooperatively by multiple permittees) shall inspect disturbed areas of the construction site that have not been finally stabilized, areas used for storage of materials that are exposed to precipitation, structural control measures, and locations where vehicles enter or exit the site, at least once every fourteen (14) calendar days and within 24 hours of the end of a storm event of 0.5 inches or greater.

Where sites have been finally or temporarily stabilized, runoff is unlikely due to winter conditions (e.g., site is covered with snow, ice, or frozen ground exists), or during seasonal arid periods in arid areas (areas with an average annual rainfall of 0 to 10 inches) and semi-arid areas (areas with an average annual rainfall of 10 to 20 inches) such inspections shall be conducted at least once every month.

Permittees are eligible for a waiver of monthly inspection requirements until one month **before** thawing conditions are expected to result in a discharge if all of the following requirements are met: 1) the project is located in an area where frozen conditions are anticipated to continue for extended periods of time (i.e., more than one month); 2) land disturbance activities have been suspended; and 3) the beginning and ending dates of the waiver period are documented in the SWPPP.

a. Disturbed areas and areas used for storage of materials that are exposed to precipitation shall be inspected for evidence of, or the potential for, pollutants entering the drainage system. Sediment and erosion control measures identified in the SWPPP shall be observed to ensure that they are operating correctly. Where discharge locations or points are accessible, they shall be inspected to ascertain whether erosion control measures are effective in preventing significant impacts to

4. **Inspections.** (Continued)

receiving waters. Where discharge locations are inaccessible, nearby downstream locations shall be inspected to the extent that such inspections are practicable. Locations where vehicles enter or exit the site shall be inspected for evidence of offsite sediment tracking.

b. Based on the results of the inspection, the SWPPP shall be modified as necessary (e.g., show additional controls on map required by Part IV.D.1; revise description of controls required by Part IV.D.2) to include additional or modified BMPs designed to correct problems identified. Revisions to the SWPPP shall be completed within 7 calendar days following the inspection. If existing BMPs need to be modified or if additional BMPs are necessary, implementation shall be completed before the next anticipated storm event. If implementation before the next anticipated storm event is impracticable, they shall be implemented as soon as practicable.

c. A report summarizing the scope of the inspection, name(s) and qualifications of personnel making the inspection, the date(s) of the inspection, and major observations relating to the implementation of the SWPPP shall be made and retained as part of the SWPPP for at least three years from the date that the site is finally stabilized. Major observations should include: the location(s) of discharges of sediment or other pollutants from the site; location(s) of BMPs that need to be maintained; location(s) of BMPs that failed to operate as designed or proved inadequate for a particular location; and location(s) where additional BMPs are needed that did not exist at the time of inspection. Actions taken in accordance with Part IV.D.4.b of this permit shall be made and retained as part of the storm water pollution prevention plan for at least three years from the date that the site is finally stabilized. Such reports shall identify any incidents of non-compliance. Where a report does not identify any incidents of non-compliance, the report shall contain a certification that the facility is in compliance with the storm water pollution prevention plan and this permit. The report shall be signed in accordance with Part VI.G of this permit.

5. **Non-Storm Water Discharges.** Except for flows from fire fighting activities, sources of non-storm water listed in Part III.A.2 or 3 of this permit that are combined with storm water discharges associated with construction activity must be identified in the SWPPP. The SWPPP shall identify and ensure the implementation of appropriate pollution prevention measures for the non-storm water component(s) of the discharge.

Part V. RETENTION OF RECORDS

A. **Documents.** The permittee shall retain copies of storm water pollution prevention plans and all reports required by this permit, and records of all data used to complete the Notice of Intent to be covered by this permit, for a period of at least three years from the date that the site is finally stabilized. This period may be extended by request of the Director at any time.

B. **Accessibility.** The permittee shall retain a copy of the storm water pollution prevention plan required by this permit (including a copy of the permit language) at the construction site (or other local location accessible to the Director, a State, Tribal or local agency approving sediment and erosion plans, grading plans, or storm water management plans; local government officials; or the operator of a municipal separate storm sewer receiving discharges from the site) from the date of project initiation to the date of final stabilization. Permittees with day-to-day operational control over SWPPP implementation shall have a copy of the SWPPP available at a central location on-site for the use of all operators and those identified as having responsibilities under the SWPPP whenever they are on the construction site.

C. **Addresses.** Except for the submittal of NOIs and NOTs (see Parts II.C and VIII.B, respectively), all written correspondence concerning discharges in any State, Indian Country land or from any Federal facility covered under this permit and directed to the EPA, including the submittal of individual permit applications, shall be sent to the following address:

United States EPA, Region 8
Ecosystems Protection Program (8EPR-EP)
Storm Water Staff
999 18th Street, Suite 500
Denver, CO 80202-2466

Part VI. STANDARD PERMIT CONDITIONS

A. Duty to Comply.

1. The permittee must comply with all conditions of this permit. Any permit noncompliance constitutes a violation of CWA and is grounds for enforcement action; for permit termination, revocation and reissuance, or modification; or for denial of a permit renewal application.

2. **Penalties for Violations of Permit Conditions.** The Director will adjust the civil and administrative penalties listed below in accordance with the Civil Monetary Penalty Inflation Adjustment Rule (Federal Register: December 31, 1996, Volume 61, Number 252, pages 69359-69366, as corrected, March 20, 1997, Volume 62, Number 54, pages 13514-13517) as mandated by the Debt Collection Improvement Act of 1996 for inflation on a periodic basis. This rule allows EPA's penalties to keep pace with inflation. The Agency is required to review its penalties at least once every four years thereafter and to adjust them as necessary for inflation according to a specified formula. The civil and administrative penalties listed below were adjusted for inflation starting in 1996.

   a. Criminal.

      (1) *Negligent Violations.* The CWA provides that any person who negligently violates permit conditions implementing sections 301, 302, 306, 307, 308, 318, or 405 of the Act is subject to a fine of not less than $2,500 nor more than $25,000 per day of violation, or by imprisonment for not more than 1 year, or both.

      (2) *Knowing Violations.* The CWA provides that any person who knowingly violates permit conditions implementing sections 301, 302, 306, 307, 308, 318, or 405 of the Act is subject to a fine of not less than $5,000 nor more than $50,000 per day of violation, or by imprisonment for not more than 3 years, or both.

      (3) *Knowing Endangerment.* The CWA provides that any person who knowingly violates permit conditions implementing sections 301, 302, 306, 307, 308, 318, or 405 of the Act and who knows at that time that he is placing another person in imminent danger of death or serious bodily injury is subject to a fine of not more than $250,000, or by imprisonment for not more than 15 years, or both.

      (4) *False Statement.* The CWA provides that any person who knowingly makes any false material statement, representation, or certification in any application, record, report, plan, or other document filed or required to be maintained under the Act or who knowingly falsifies, tampers with, or renders inaccurate, any monitoring device or method required to be maintained under the Act, shall upon conviction, be punished by a fine of not more than $10,000 or by imprisonment for not more than two years, or by both. If a conviction is for a violation committed after a first conviction of such person under this paragraph, punishment shall be by a fine of not more than $20,000 per day of violation, or by imprisonment of not more than four years, or by both. (See section 309.c.4 of the Clean Water Act).

   b. Civil Penalties. The CWA provides that any person who violates a permit condition implementing sections 301, 302, 306, 307, 308, 318, or 405 of the Act is subject to a civil penalty not to exceed $27,500 per day for each violation.

2. **Penalties for Violations of Permit Conditions.** (Continued)

   c. Administrative Penalties. The CWA provides that any person who violates a permit condition implementing sections 301, 302, 306, 307, 308, 318, or 405 of the Act is subject to an administrative penalty, as follows:

      (1) *Class I Penalty.* Not to exceed $11,000 per violation nor shall the maximum amount exceed $27,500.

      (2) *Class II Penalty.* Not to exceed $11,000 per day for each day during which the violation continues nor shall the maximum amount exceed $137,500.

B. **Continuation of the Expired General Permit.** If this permit is not reissued or replaced prior to the expiration date, it will be administratively continued in accordance with the Administrative Procedures Act and remain in force and effect. Any permittee who was granted permit coverage prior to the expiration date will automatically remain covered by the continued permit until the earlier of:

   1. Reissuance or replacement of this permit, at which time the permittee must comply with the Notice of Intent conditions of the new permit to maintain authorization to discharge; or

   2. the permittee's submittal of a Notice of Termination; or

   3. issuance of an individual permit for the permittee's discharges; or

   4. a formal permit decision by the Director not to reissue this general permit, at which time the permittee must seek coverage under an alternative general permit or an individual permit.

C. **Need to Halt or Reduce Activity not a Defense.** It shall not be a defense for a permittee in an enforcement action that it would have been necessary to halt or reduce the permitted activity in order to maintain compliance with the conditions of this permit.

D. **Duty to Mitigate.** The permittee shall take all reasonable steps to minimize or prevent any discharge in violation of this permit which has a reasonable likelihood of adversely affecting human health or the environment.

E. **Duty to Provide Information.** The permittee shall furnish to the Director or an authorized representative of the Director any information which is requested to determine compliance with this permit or other information.

F. **Other Information.** When the permittee becomes aware that he or she failed to submit any relevant facts or submitted incorrect information in the Notice of Intent or in any other report to the Director, he or she shall promptly submit such facts or information.

G. **Signatory Requirements.** All Notices of Intent, Notices of Termination, storm water pollution prevention plans, reports, certifications or information either submitted to the Director or the operator of a large or medium municipal separate storm sewer system, or that this permit requires be maintained by the permittee, shall be signed as follows:

   1. All Notices of Intent and Notices of Termination shall be signed as follows:

G. **Signatory Requirements.** (Continued)

a. for a corporation: by a responsible corporate officer. For the purpose of this section, a responsible corporate officer means: a president, secretary, treasurer, or vice-president of the corporation in charge of a principal business function, or any other person who performs similar policy or decision-making functions for the corporation; or the manager of one or more manufacturing, production or operating facilities employing more than 250 persons or having gross annual sales or expenditures exceeding $25,000,000 (in second-quarter 1980 dollars) if authority to sign documents has been assigned or delegated to the manager in accordance with corporate procedures;

b. for a partnership or sole proprietorship: by a general partner or the proprietor, respectively; or

c. for a municipality, State, Federal, or other public agency: by either a principal executive officer or ranking elected official. For purposes of this section, a principal executive officer of a Federal agency includes (1) the chief executive officer of the agency, or (2) a senior executive officer having responsibility for the overall operations of a principal geographic unit of the agency (e.g., Regional Administrators of EPA).

2. All reports required by this permit and other information requested by the Director or authorized representative of the Director shall be signed by a person described above or by a duly authorized representative of that person. A person is a duly authorized representative only if:

a. the authorization is made in writing by a person described above and submitted to the Director.

b. the authorization specifies either an individual or a position having responsibility for the overall operation of the regulated facility or activity, such as the position of manager, operator, superintendent, or position of equivalent responsibility or an individual or position having overall responsibility for environmental matters for the company. (A duly authorized representative may thus be either a named individual or any individual occupying a named position).

c. Changes to Authorization. If an authorization under Part II.B is no longer accurate because a different operator has responsibility for the overall operation of the construction site, a new Notice of Intent satisfying the requirements of Part II.B must be submitted to the Director prior to or together with any reports, information, or applications to be signed by an authorized representative. The change in authorization must be submitted within the time frame specified in Part II.A.3, and sent to the address specified in Part II.C.

d. Certification. Any person signing documents under Part VI.G shall make the following certification:

"I certify under penalty of law that this document and all attachments were prepared under my direction or supervision in accordance with a system designed to assure that qualified personnel properly gathered and evaluated the information submitted. Based on my inquiry of the person or persons who manage the system, or those persons directly responsible for gathering the information, the information submitted is, to the best of my knowledge and belief, true, accurate, and complete. I am aware that there are significant penalties for submitting false information, including the possibility of fine and imprisonment for knowing violations."

H. **Penalties for Falsification of Reports.** Section 309(c)(4) of the Clean Water Act provides that any person who knowingly makes any false material statement, representation, or certification in any record or other document submitted or required to be maintained under this permit, including reports of compliance or noncompliance shall, upon conviction, be punished by a fine of not more than $10,000, or by imprisonment for not more than two years, or by both.

I. **Oil and Hazardous Substance Liability.** Nothing in this permit shall be construed to preclude the institution of any legal action or relieve the permittee from any responsibilities, liabilities, or penalties to which the permittee is or may be subject under section 311 of the CWA or section 106 of the Comprehensive Environmental Response, Compensation and Liability Act of 1980 (CERCLA).

J. **Property Rights.** The issuance of this permit does not convey any property rights of any sort, nor any exclusive privileges, nor does it authorize any injury to private property nor any invasion of personal rights, nor any infringement of Federal, State or local laws or regulations.

K. **Severability.** The provisions of this permit are severable, and if any provision of this permit, or the application of any provision of this permit to any circumstance, is held invalid, the application of such provision to other circumstances, and the remainder of this permit shall not be affected thereby.

L. **Requiring an Individual Permit or an Alternative General Permit.**

1. The Director may require any person authorized by this permit to apply for and/or obtain either an individual NPDES permit or an alternative NPDES general permit. Any interested person may petition the Director to take action under this paragraph. Where the Director requires a permittee authorized to discharge under this permit to apply for an individual NPDES permit, the Director shall notify the permittee in writing that a permit application is required. This notification shall include a brief statement of the reasons for this decision, an application form, a statement setting a deadline for the permittee to file the application, and a statement that on the effective date of issuance or denial of the individual NPDES permit or the alternative general permit as it applies to the individual permittee, coverage under this general permit shall automatically terminate. Applications shall be submitted to the appropriate Regional Office indicated in Part V.C of this permit. The Director may grant additional time to submit the application upon request of the applicant. If a permittee fails to submit in a timely manner an individual NPDES permit application as required by the Director under this paragraph, then the applicability of this permit to the individual NPDES permittee is automatically terminated at the end of the day specified by the Director for application submittal.

2. Any permittee authorized by this permit may request to be excluded from the coverage of this permit by applying for an individual permit. In such cases, the permittee shall submit an individual application in accordance with the requirements of 40 CFR 122.26(c)(1)(ii), with reasons supporting the request, to the Director at the address for the appropriate Regional Office indicated in Part V.C of this permit. The request may be granted by issuance of any individual permit or an alternative general permit if the reasons cited by the permittee are adequate to support the request.

3. When an individual NPDES permit is issued to a permittee otherwise subject to this permit, or the permittee is authorized to discharge under an alternative NPDES general permit, the applicability of this permit to the individual NPDES permittee is automatically terminated on the effective date of the individual permit or the date of authorization of coverage under the alternative general permit, whichever the case may be. When an individual NPDES permit is denied to an owner or operator otherwise subject to this permit, or the owner or operator is denied for coverage under an alternative NPDES general permit, the applicability of this permit to the individual NPDES permittee is automatically terminated on the date of such denial, unless otherwise specified by the Director.

M. State/Tribal Environmental Laws.

1. Nothing in this permit shall be construed to preclude the institution of any legal action or relieve the permittee from any responsibilities, liabilities, or penalties established pursuant to any applicable State/Tribal law or regulation under authority preserved by section 510 of the Act.

2. No condition of this permit shall release the permittee from any responsibility or requirements under other environmental statutes or regulations.

N. Proper Operation and Maintenance. The permittee shall at all times properly operate and maintain all facilities and systems of treatment and control (and related appurtenances) which are installed or used by the permittee to achieve compliance with the conditions of this permit and with the requirements of storm water pollution prevention plans. Proper operation and maintenance also includes adequate laboratory controls and appropriate quality assurance procedures. Proper operation and maintenance requires the operation of backup or auxiliary facilities or similar systems, installed by a permittee only when necessary to achieve compliance with the conditions of this permit.

O. Inspection and Entry. The permittee shall allow the Director or an authorized representative of EPA, the State/Tribe, or, in the case of a construction site which discharges through a municipal separate storm sewer, an authorized representative of the municipal owner/operator or the separate storm sewer receiving the discharge, upon the presentation of credentials and other documents as may be required by law, to:

1. Enter upon the permittee's premises where a regulated facility or activity is located or conducted or where records must be kept under the conditions of this permit;

2. Have access to and copy at reasonable times, any records that must be kept under the conditions of this permit; and

3. Inspect at reasonable times any facilities or equipment (including monitoring and control equipment).

P. Permit Actions. This permit may be modified, revoked and reissued, or terminated for cause. The filing of a request by the permittee for a permit modification, revocation and reissuance, or termination, or a notification of planned changes or anticipated noncompliance does not stay any permit condition.

Part VII. REOPENER CLAUSE

A. If there is evidence indicating that the storm water discharges authorized by this permit cause, have the reasonable potential to cause or contribute to, a violation of a water quality standard, the permittee may be required to obtain an individual permit or an alternative general permit in accordance with Part I.C of this permit, or the permit may be modified to include different limitations and/or requirements.

B. Permit modification or revocation will be conducted according to 40 CFR 122.62, 122.63, 122.64 and 124.5.

C. EPA may propose a modification to this permit after further discussions between the Agency and the Advisory Council on Historic Preservation for the protection of historic properties.

Part VIII. TERMINATION OF COVERAGE

A. Notice of Termination. Permittees must submit a completed Notice of Termination (NOT) that is signed in accordance with Part VI.G of this permit when one or more of the conditions contained in Part I.D.2. (Terminating Coverage) have been met at a construction project. The NOT form found in Addendum D will be used unless it has been replaced by a revised version by the Director. The Notice of Termination shall include the following information:

1. The NPDES permit number for the storm water discharge identified by the Notice of Termination;

2. An indication of whether the storm water discharges associated with construction activity have been eliminated (i.e., regulated discharges of storm water are being terminated) or the permittee is no longer an operator at the site;

3. The name, address and telephone number of the permittee submitting the Notice of Termination;

4. The name of the project and street address (or a description of location if no street address is available) of the construction site for which the notification is submitted;

5. The latitude and longitude of the construction site; and

6. The following certification, signed in accordance with Part VI.G (signatory requirements) of this permit. For construction projects with more than one permittee and/or operator, the permittee need only make this certification for those portions of the construction site where the permittee was authorized under this permit and not for areas where the permittee was not an operator:

   "I certify under penalty of law that all storm water discharges associated with industrial activity from the identified facility that authorized by a general permit have been eliminated or that I am no longer the operator of the facility or construction site. I understand that by submitting this notice of termination, I am no longer authorized to discharge storm water associated with industrial activity under this general permit, and that discharging pollutants in storm water associated with industrial activity to waters of the United States is unlawful under the Clean Water Act where the discharge is not authorized by a NPDES permit. I also understand that the submittal of this Notice of Termination does not release an operator from liability for any violations of this permit or the Clean Water Act."

   For the purposes of this certification, elimination of storm water discharges associated with construction activity means that all disturbed soils at the portion of the construction site where the operator had control have been finally stabilized (as defined in Part IX.I) and temporary erosion and sediment control measures have been removed or will be removed at an appropriate time to ensure final stabilization is maintained, or that all storm water discharges associated with construction activities from the identified site that are authorized by a NPDES general permit have otherwise been eliminated from the portion of the construction site where the operator had control.

B. Addresses.

1. All Notices of Termination, signed in accordance with Part VI.G of this permit, are to be submitted using the form provided by the Director (or a photocopy thereof), to the address specified on the NOT form.

Part IX. DEFINITIONS

A. "**Best Management Practices**" ("BMPs") means schedules of activities, prohibitions of practices, maintenance procedures, and other management practices to prevent or reduce the discharge of pollutants to waters of the United States. BMPs also include treatment requirements, operating procedures, and practices to control plant site runoff, spillage or leaks, sludge or waste disposal, or drainage from raw material storage.

B. "**Control Measure**" as used in this permit, refers to any Best Management Practice or other method used to prevent or reduce the discharge of pollutants to waters of the United States.

C. "**Commencement of Construction**" the initial disturbance of soils associated with clearing, grading, or excavating activities or other construction activities.

D. "**CWA**" means the Clean Water Act or the Federal Water Pollution Control Act, 33 U.S.C. §1251 et seq.

E. "**Director**" means the Regional Administrator of the Environmental Protection Agency or an authorized representative.

F. "**Discharge**" when used without qualification means the "discharge of a pollutant."

G. "**Discharge of Storm Water Associated with Construction Activity**" as used in this permit, refers to a discharge of pollutants in storm water runoff from areas where soil disturbing activities (e.g., clearing, grading, or excavation), construction materials or equipment storage or maintenance (e.g., fill piles, borrow areas, concrete truck washout, fueling), or other industrial storm water directly related to the construction process (e.g., concrete or asphalt batch plants) are located.

H. "**Facility or Activity**" means any NPDES "point source" or any other facility or activity (including land or appurtenances thereto) that is subject to regulation under the NPDES program.

I. "**Final Stabilization**" means that either:

1. All soil disturbing activities at the site have been completed and a uniform (e.g., evenly distributed, without large bare areas) perennial vegetative cover with a density of 70% of the native background vegetative cover for the area has been established on all unpaved areas and areas not covered by permanent structures, or equivalent permanent stabilization measures (such as the use of riprap, gabions, or geotextiles) have been employed. In some parts of the country, background native vegetation will cover less than 100% of the ground (e.g., arid areas, beaches). Establishing at least 70% of the natural cover of native vegetation meets the vegetative cover criteria for final stabilization (e.g., if the native vegetation covers 50% of the ground, 70% of 50% would require 35% total cover for final stabilization; on a beach with no natural vegetation, no stabilization is required); or

2. For individual lots in residential construction by either: **a)** the homebuilder completing final stabilization as specified above, or **b)** the homebuilder establishing temporary stabilization including perimeter controls for an individual lot prior to occupation of the home by the homeowner and informing the homeowner of the need for, and benefits of, final stabilization. (Homeowners typically have an incentive to put in landscaping functionally equivalent to final stabilization as quick as possible to keep mud out of their homes and off their sidewalks and driveways.); or

I. "**Final Stabilization**" (continued)

3. For construction projects on land used for agricultural purposes (e.g., pipelines across crop or range land), final stabilization may be accomplished by returning the disturbed land to its preconstruction agricultural use. Areas disturbed that were not previously used for agricultural activities, such as buffer strips immediately adjacent to "waters of the United States," and areas which are not being returned to their preconstruction agricultural use must meet the final stabilization criteria in (1) or (2) above.

J. "**Flow-Weighted Composite Sample**" means a composite sample consisting of a mixture of aliquots collected at a constant time interval, where the volume of each aliquot is proportional to the flow rate of the discharge.

K. "**Large and Medium Municipal Separate Storm Sewer System**" - means all municipal separate storm sewers that are either:

1. Located in an incorporated place (city) with a population of 100,000 or more as determined by the latest Decennial Census by the Bureau of Census (these cities are listed in Appendices F and G of 40 CFR 122); or

2. Located in the counties with unincorporated urbanized populations of 100,000 or more, except municipal separate storm sewers that are located in the incorporated places, townships or towns within such counties (these counties are listed in Appendices H and I of 40 CFR 122); or

3. Owned or operated by a municipality other than those described in paragraph (i) or (ii) and that are designated by the Director as part of the large or medium municipal separate storm sewer system.

L. "**NOI**" means Notice of Intent to be covered by this permit (see Part II of this permit.)

M. "**NOT**" means Notice of Termination (see Part VIII of this permit).

N. "**Operator**" for the purpose of this permit and in the context of storm water associated with construction activity, means any party associated with a construction project that meets either of the following two criteria:

1. The party has operational control over construction plans and specifications, including the ability to make modifications to those plans and specifications; or

2. The party has day-to-day operational control of those activities at a project which are necessary to ensure compliance with a storm water pollution prevention plan for the site or other permit conditions (e.g., they are authorized to direct workers at a site to carry out activities required by the SWPPP or comply with other permit conditions).

This definition is provided to inform permittees of EPA's interpretation of how the regulatory definitions of "owner or operator" and "facility or activity" are applied to discharges of storm water associated with construction activity.

O "**Owner or Operator**" means the owner or operator of any "facility or activity" subject to regulation under the NPDES program.

P. "**Point Source**" means any discernible, confined, and discrete conveyance, including but not limited to, any pipe, ditch, channel, tunnel, conduit, well, discrete fissure, container, rolling stock, concentrated animal feeding operation, landfill leachate collection system, vessel or other floating craft from which pollutants are or may be discharged. This term does not include return flows from irrigated agriculture or agricultural storm water runoff.

Q. "**Pollutant**" is defined at 40 CFR 122.2. A partial listing from this definition includes: dredged spoil, solid waste, sewage, garbage, sewage sludge, chemical wastes, biological materials, heat, wrecked or discarded equipment, rock, sand, cellar dirt, and industrial or municipal waste.

R. "**Runoff Coefficient**" means the fraction of total rainfall that will appear at the conveyance as runoff.

S. "**Storm Water**" means storm water runoff, snow melt runoff, and surface runoff and drainage.

T. "**Storm Water Associated with Industrial Activity**" is defined at 40 CFR 122.26(b)(14) and incorporated here by reference. Most relevant to this permit is 40 CFR 122.26(b)(14)(x), which relates to construction activity including clearing, grading and excavation activities that result in the disturbance of five (5) or more acres of total land area, or are part of a larger common plan of development or sale.

U. "**Waters of the United States**" means:

1. All waters which are currently used, were used in the past, or may be susceptible to use in interstate or foreign commerce, including all waters which are subject to the ebb and flow of the tide;

2. All interstate waters, including interstate "wetlands";

3. All other waters such as interstate lakes, rivers, streams (including intermittent streams), mudflats, sandflats, wetlands, sloughs, prairie potholes, wet meadows, playa lakes, or natural ponds the use, degradation, or destruction of which would affect or could affect interstate or foreign commerce including any such waters:

   a. Which are or could be used by interstate or foreign travelers for recreational or other purposes;
   b. From which fish or shellfish are or could be taken and sold in interstate or foreign commerce; or
   c. Which are used or could be used for industrial purposes by industries in interstate commerce;

4. All impoundments of waters otherwise defined as waters of the United States under this definition;

5. Tributaries of waters identified in paragraphs (a) through (d) of this definition;

6. The territorial sea; and

7. Wetlands adjacent to waters (other than waters that are themselves wetlands) identified in paragraphs 1. through 6. of this definition.

Waste treatment systems, including treatment ponds or lagoons designed to meet the requirements of the CWA (other than cooling ponds for steam electric generation stations per 40 CFR 423) which also meet the criteria of this definition) are not waters of the United States. Waters of the United States do not include prior converted cropland. Notwithstanding the determination of an area's status as prior converted cropland by any other federal agency, for the purposes of the Clean Water Act, the final authority regarding Clean Water Act jurisdiction remains with EPA.

ADDENDUM A - ENDANGERED SPECIES

I. Instructions for Applicants

A. Background

To meet its obligations under the Clean Water Act and the Endangered Species Act (ESA) and to promote those Acts' goals, the Environmental Protection Agency (EPA) is seeking to ensure the activities regulated by the Construction General Permit (CGP) are protective of endangered and threatened species and critical habitat. To ensure that those goals are met, applicants for CGP coverage are required under Part I.B.3.e. to assess the impacts of their storm water discharges and storm water discharge-related activities on Federally listed endangered and threatened species ("listed species") and designated critical habitat ("critical habitat") by following Steps One through Six listed below. EPA strongly recommends that applicants follow these steps at the earliest possible stage to ensure that measures to protect listed species and critical habitat are incorporated early in the planning process. At minimum, the procedures should be followed when developing the storm water pollution prevention plan.

Permittees and applicants also have an independent ESA obligation to ensure that their activities do not result in any prohibited "takes" of listed species.[1] Many of the measures required in the CGP and in these instructions to protect species may also assist permittees in ensuring that their construction activities do not result in a prohibited take of species in violation of § 9 of the ESA. Applicants who plan construction activities in areas that harbor endangered and threatened species are advised to ensure that they are protected from potential takings liability under ESA § 9 by obtaining either an ESA § 10 permit or by requesting formal consultation under ESA § 7 (as described in more detail in Step Seven below). Applicants who seek protection from takings liability should be aware that it is possible that some specific construction activities may be too unrelated to storm water discharges to be afforded incidental take coverage through an ESA § 7 consultation that is performed to meet the eligibility requirements for CGP coverage. In such instances, applicants should apply for an ESA § 10 permit. Where applicants are not sure whether to pursue a § 10 permit or a § 7 consultation for takings protection, they should confer with the appropriate Fish and Wildlife Service (FWS) or National Marine Fisheries Service (NMFS) office.

This permit provides for the possibility of multiple permittees at a construction site. Applicants should be aware that in many cases they can meet the permit eligibility requirements by relying on another operator's certification of eligibility under Part I.B.3.e.(2)(a), (b), or (c). This is allowed under Part I.B.3.e.(2)(d) of the permit. However, the other operator's certification must apply to the applicant's project area and must address the effects from the applicant's storm water discharges and storm water discharge-related activities on listed species and critical habitat. By certifying eligibility under Part I.B.3.e.(2)(d), the applicant agrees to comply with any measures or controls upon which the other operator's certification under Part I.B.3.e.(2)(a), (b) or (c) was based. This situation will typically occur where a developer or primary contractor, such as one for construction of a subdivision or industrial park, conducts a comprehensive assessment of effects on listed species and critical habitat for the entire construction project, certifies eligibility under Part I.B.3.e.(2)(a), (b) or (c), and that certification is relied upon by other operators (i.e., contractors) at the site. However, applicants

---

[1] Section 9 of the ESA prohibits any person from "taking" a listed species (e.g., harassing or harming it) unless: 1) the taking is authorized through a "incidental take statement" as part of undergoing ESA § 7 formal consultation; 2) where an incidental take permit is obtained under ESA § 10 (which requires the development of a habitat conservation plan); or 3) where otherwise authorized or exempted under the ESA. This prohibition applies to all entities including private individuals, businesses, and governments.

A. Background (Continued)

that consider relying on another operator's certification should carefully review that certification along with any supporting information. If an applicant does not believe that the operator's certification provides adequate coverage for the applicant's storm water discharges and storm water discharge-related activities or for the applicant's particular project area, the applicant should provide its own independent certification under Part I.B.3.e.(2)(a), (b), or (c).

B. Procedures

To receive coverage under the Construction General Permit, applicants must assess the potential effects of their storm water discharges and storm water discharge-related activities on listed species and their critical habitat. To make this assessment, applicants must follow the steps outlined below prior to completing and submitting Notice of Intent (NOI) form. Applicants who are able to certify eligibility under Parts I.B.3.e.(2)(b), (c) or (d) because of a previously issued ESA § 10 permit, a previously completed ESA § 7 consultation, or because the applicant's activities were already addressed in another operator's certification of eligibility may proceed directly to Step Six.

Note - EPA's new NOI form which is included in Addendum C of this permit (published in the Federal Register on March 6, 1998, 63 FR 11253), requires that applicants provide detailed certification information on listed species. Previous versions of NOI forms should not be used any longer because they do not contain the specific certification provisions relating to listed species and critical habitats at construction projects. Use of the older NOI forms do **not** relieve applicants of their obligation to follow the procedures listed below to determine if their construction storm water discharges or storm water discharge-related activities meet permit eligibility requirements for the protection of listed species and critical habitat. By following these instructions, applicants will have sufficient information on listed species and critical habitat in order to complete the new NOI form (see Addendum C, page 45) and sign the certification statement.

Step One: Determine if the Construction Site Is Found Within Designated Critical Habitat for Listed Species

Some, but not all, listed species have designated critical habitat. Exact locations of such habitat is provided in the Service regulations at 50 CFR Parts 17 and 226. To determine if their construction site occurs within designated critical habitat, applicants should either:

- Contact the nearest Fish and Wildlife Service (FWS) and National Marine Fisheries Service (NMFS) Office. A list of FWS and NMFS offices is found in Section II of this Addendum; or

- Contact the State or Tribal Natural Heritage Centers. These centers compile and disseminate information on Federally listed and other protected species. They frequently have the most current information on listed species and critical habitat. A list of these centers is provided in Section III of this Addendum; or

Step Three: (Continued)

- Contacting the nearest State or Tribal wildlife agency, the Fish and Wildlife Service (FWS), or the National Marine Fisheries Service (NMFS). Many endangered and threatened species are found in well-defined areas or habitats. Such information is frequently known to State, Tribal, or Federal wildlife agencies. A list of FWS and NMFS offices is provided in Section II of this Addendum below.

- Contacting local/regional conservation groups or the State or Tribal Natural Heritage Centers (see Section III of this Addendum). State and local conservation groups may have location specific listed species information. The Natural Heritage Centers inventory species and their locations and maintain lists of sightings and habitats.

- Submitting a data request to a Natural Heritage Center. Many of these centers will provide site specific information on the presence of listed species in a project area. Some of these centers will charge a fee for researching data requests.

- Conducting a formal biological survey. Larger construction sites with extensive storm water discharges may choose to conduct biological surveys as the most effective way to assess whether species are located in the project area and whether there are likely adverse effects. Biological surveys are frequently performed by environmental consulting firms. A biological survey can be used to follow Steps Four through Six of these instructions.

- Conducting an environmental assessment under the National Environmental Policy Act (NEPA). Some construction activities may require environmental assessments under NEPA. Such assessments may indicate if listed species are in the project area. Coverage under the CGP does not trigger such an assessment because the permit does not regulate any dischargers subject to New Source Performance Standards under Section 306 of the Clean Water Act, and is thus statutorily exempted from NEPA. See CWA § 511(c). However, some construction activities might require review under NEPA because of Federal funding or other Federal involvement in the project.

If no species are found in the project area, an applicant is eligible for CGP coverage. Applicants must provide the necessary certification on the NOI form. If listed species are found in the project area, applicants must indicate the location and nature of this presence in the storm water pollution prevention plan and follow Step Four.

Step Four: Determine if Listed Species or Critical Habitat are likely to be Adversely Affected by the Construction Activity's Storm Water Discharges or Storm Water Discharge-related Activities.

To receive CGP coverage, applicants must assess whether their storm water discharges or storm water discharge-related activities are likely to adversely affect listed species or critical habitat. "Storm water discharge-related activities" include:

- activities which cause, contribute to, or result in point source storm water pollutant discharges, including but not limited to excavation, site development, grading, and other surface disturbance activities; and

Step Four: (Continued)

- measures to control storm water discharges including the siting, construction, operation of best management practices (BMPs) to control, reduce or prevent storm water pollution.

Potential adverse effects from storm water discharges and storm water discharge-related activities include:

- Hydrological. Storm water discharges may cause siltation, sedimentation or induce other changes in receiving waters such as temperature, salinity or pH. These effects will vary with the amount of storm water discharged and the volume and condition of the receiving water. Where a storm water discharge constitutes a minute portion of the total volume of the receiving water, adverse hydrological effects are less likely. Construction activity itself may also alter drainage patterns on a site where construction occurs which can impact listed species or critical habitat.

- Habitat. Excavation, site development, grading, and other surface disturbance activities from construction activities, including the installation or placement of storm water BMPs, may adversely affect listed species or their habitat. Storm water may drain or inundate listed species habitat.

- Toxicity. In some cases, pollutants in storm water may have toxic effects on listed species.

The scope of effects to consider will vary with each site. If the applicant is having difficulty in determining whether his or her project is likely to adversely effect a listed specie or critical habitat, then the appropriate office of the FWS, NMFS or Natural Heritage Center listed in Sections II and III of this Addendum should be contacted for assistance. If adverse effects are not likely, then the applicant should make the appropriate certification on the NOI form and apply for coverage under the permit. If adverse effects are likely, applicants must follow Step Five.

Step Five: Determine if Measures Can Be Implemented To Avoid any Adverse Effects

If an applicant makes a preliminary determination that adverse effects are likely, it can still receive coverage under Part I.B.3.e.(2)(a) of the CGP if appropriate measures are undertaken to avoid or eliminate the likelihood of adverse effects prior to applying for permit coverage. These measures may involve relatively simple changes to construction activities such as re-routing a storm water discharge to bypass an area where species are located, relocating BMPs, or by changing the "footprint" of the construction activity. Applicants may wish to contact the FWS and/or NMFS to see what appropriate measures might be suitable to avoid or eliminate the likelihood of adverse impacts to listed species and/or critical habitat. (See 50 CFR 402.13(b)). This can entail the initiation of informal consultation with the FWS and/or NMFS which is described in more detail in Step Six.

Step Five: (Continued)

If applicants adopt measures to avoid or eliminate adverse affects, they must continue to abide by those measures during the course of permit coverage. These measures must be described in the storm water pollution prevention plan and may be enforceable as permit conditions. If appropriate measures to avoid the likelihood of adverse effects are not available to the applicant, the applicant must follow Step Six.

Step Six: Determine if the Eligibility Requirements of Part I.B.3.e.(2)(b)-(d) Can Be Met.

Where adverse effects are likely, the applicant must contact the EPA and FWS/NMFS. Applicants may still be eligible for CGP coverage if any likely adverse effects can be addressed through meeting the criteria of Part I.B.3.e.(2)(b)-(d)of the permit. These criteria are as follows:

1. An ESA Section 7 Consultation is Performed for the Applicant's Activity (See Part I.B.3.e.(2)(b)

   Formal or informal ESA § 7 consultation is performed with the FWS and/or NMFS which addresses the effects of the applicant's storm water discharges and storm water discharge-related activities on listed species and critical habitat. The formal consultation must result in either a "no jeopardy opinion" or a "jeopardy opinion" that identifies reasonable and prudent alternatives to avoid jeopardy which are to be implemented by the applicant. The informal consultation must result in a written concurrence by the Service(s) on a finding that the applicant's storm water discharge(s) and storm water discharge-related activities are not likely to adversely affect listed species or critical habitat (for informal consultation, see 50 CFR 402.13).

   Most consultations are accomplished through informal consultation. By the terms of this permit, EPA has automatically designated applicants as non-Federal representatives for the purpose of conducting informal consultations. See Part I.B.3.e.(5) and 50 CFR 402.08 and 402.13. When conducting informal ESA § 7 consultation as a non-Federal representative, applicants must follow the procedures found in 50 CFR 402 of the ESA regulations.

   Applicants must also notify EPA and the Services of their intention and agreement to conduct consultation as a non-Federal representative. Consultation may occur in the context of another Federal action at the construction site (e.g., where ESA § 7 consultation was performed for issuance of a wetlands dredge and fill permit for the project or where a NEPA review is performed for the project which incorporates a section 7 consultation). Any terms and conditions developed through consultations to protect listed species and critical habitat must be incorporated into the SWPPP. As noted above, applicants may, if they wish, initiate consultation with the Services at Step Five.

   Whether ESA § 7 consultation must be performed with either the FWS, NMFS or both Services depends on the listed species which may be affected by the applicant's activity. In general, NMFS has jurisdiction over marine, estuarine, and anadromous species. Applicants should also be aware that while formal § 7 consultation provides protection from incidental takings liability, informal consultation does not.

Step Six: (Continued)

2. An Incidental Taking Permit Under Section 10 of the ESA is Issued for the Applicants Activity (See Part I.B.3.e.(2)(c))

   The applicant's construction activities are authorized through the issuance of a permit under § 10 of the ESA and that authorization addresses the effects of the applicant's storm water discharge(s) and storm water discharge-related activities on listed species and critical habitat. Applicants must follow FWS and/or NMFS procedures when applying for an ESA Section 10 permit (see 50 CFR § 17.22(b)(1) (FWS) and § 222.22 (NMFS)). Application instructions for Section 10 permits for NMFS species can be obtained by 1) accessing the "Office of Protected Resources" sector of the NMFS Home Page at "http://www.nmfs.gov" or by contacting the National Marine Fisheries Service, Office of Protected Resources, Endangered Species Division, F/PR3, 1315 East-West Highway, Silver Spring, Maryland 20910; telephone (301) 713-1401, fax (301) 713-0376.

3. The Applicant Is Covered Under the Eligibility Certification of Another Operator for the Project Area (See Part I.B.3.e.(2)(d))

   The applicant's storm water discharges and storm water discharge-related activities were already addressed in another operator's certification of eligibility under Part I.B.3.e.(2)(b), or (c) which also included the applicant's project area. By certifying eligibility under Part I.B.3.e.(2)(d), the applicant agrees to comply with any measures or controls upon which the other operator's certification under Part I.B.3.e.(2)(a), (b) or (c) was based. Certification under Part I.B.3.e.(2)(d) is discussed in more detail in Section I.A. of this addendum.

   The applicant must comply with any terms and conditions imposed under the eligibility requirements of paragraphs I.B.3.e(2)(a), (b), (c), (d) to ensure that its storm water discharges and storm water discharge-related activities are protective of listed species and/or critical habitat. Such terms and conditions must be incorporated in the project's SWPPP. If the eligibility requirements of Part I.B.3.e.(2)(a)-(d) cannot be met, then the applicant may not receive coverage under the CGP. Applicants should then consider applying to EPA for an individual permit.

II. LIST OF FISH AND WILDLIFE SERVICE OFFICES

A. U.S. FISH AND WILDLIFE SERVICE OFFICES

National Website For Endangered Species Information

Endangered Species Home page:
http://www.fws.gov/~r9endspp/endspp.html

Regional, State, Field and Project Offices Applicable to This Permit.

Region Six - Regional Office	
Division Chief, Endangered Species U.S. Fish and Wildlife Service ARD-Ecological Services P.O. Box 25486, DFC Denver, CO 80225	
State, Field, and Project Offices (Region Six)	
Field Supervisor U.S. Fish and Wildlife Service Colorado Field Office 730 Simms, Suite 290 Golden, CO 80401-4798	Field Supervisor U.S. Fish and Wildlife Service Western Colorado Field Office 764 Horizon Drive South, Annex A Grand Junction, CO 81506-3946
E.S. Coordinator U.S. Fish and Wildlife Service Rocky Mountain Arsenal National Wildlife Area, Building 111 Commerce City, CO 80022-1748	Colorado River Recovery Coordinator U.S. Fish and Wildlife Service P.O. Box 25486, DFC Denver, CO 80225

III. NATURAL HERITAGE CENTER

The Natural Heritage Network comprises 85 biodiversity data centers throughout the Western Hemisphere. These centers collect, organize, and share data relating to endangered and threatened species and habitat. The network was developed to inform land-use decisions for developers, corporations, conservationists, and government agencies and is also consulted for research and educational purposes. The centers maintain a **Natural Heritage Network Control Server Website (http://www.heritage.tnc.org)** which provides website and other access to a large number of specific biodiversity centers. The center located in Colorado is listed below:

Colorado Natural Heritage Program
Colorado State University
254 General Services Building
Fort Collins, CO 80523
970/491-1309 Fax: 970/491-3349

IV. COUNTY LIST OF ENDANGERED AND THREATENED SPECIES IN COLORADO

[The following list identifies federally listed or proposed U.S. species by State and County. It has been updated through September 1, 1997.]

Note: Species listed below with a status of both E and T are generally either endangered or threatened within the specified county. The assignment of two status designations for a species in a specific county is a function of the data set used to develop this list. For purposes of this permit, however, the obligation to assess the impact of storm water discharges on listed species does not vary based on which of the two statuses (e.g., endangered threatened) is assigned (see Addendum A Instructions). Designation of critical habitat (CH) does not mean that the county constitutes critical habitat, only that critical habitat has been designated for that species (see Addendum A Instructions).

State/County	Group name	Inverse name	Scientific name	Action/ Status
COLORADO				
ADAMS	BIRDS	EAGLE, BALD	Haliaeetus leucocephalus	L,T
ALAMOSA	BIRDS	EAGLE, BALD	Haliaeetus leucocephalus	L,T
		FALCON, PEREGRINE	Falco peregrinus	L,E
		OWL, MEXICAN SPOTTED	Strix occidentalis lucida	L,T,CH
	MAMMALS	FERRET, BLACK-FOOTED	Mustela nigripes	L,E
ARCHULETA	BIRDS	EAGLE, BALD	Haliaeetus leucocephalus	L,T
		FALCON, PEREGRINE	Falco peregrinus	L,E
		OWL, MEXICAN SPOTTED	Strix occidentalis lucida	L,T,CH
	MAMMALS	FERRET, BLACK-FOOTED	Mustela nigripes	L,E
BACA	BIRDS	EAGLE, BALD	Haliaeetus leucocephalus	L,T
BENT	BIRDS	EAGLE, BALD	Haliaeetus leucocephalus	L,T
BOULDER	FISHES	TROUT, GREENBACK CUTTHROAT	Salmo clarki stomias	L,T
	PLANTS	LADIES'-TRESSES, UTE	Spiranthes diluvialis	L,T
CHAFFEE	BIRDS	EAGLE, BALD	Haliaeetus leucocephalus	L,T
		FALCON, PEREGRINE	Falco peregrinus	L,E
		OWL, MEXICAN SPOTTED	Strix occidentalis lucida	L,T,CH
	INSECTS	BUTTERFLY, UNCOMPAHGRE FRITILLARY	Boloria acrocnema	L,E
CHEYENNE	BIRDS	EAGLE, BALD	Haliaeetus leucocephalus	L,T
CLEAR CREEK	FISHES	TROUT, GREENBACK CUTTHROAT	Salmo clarki stomias	L,T
CONEJOS	BIRDS	EAGLE, BALD	Haliaeetus leucocephalus	L,T
		FALCON, PEREGRINE	Falco peregrinus	L,E
		OWL, MEXICAN SPOTTED	Strix occidentalis lucida	L,T,CH
	MAMMALS	FERRET, BLACK-FOOTED	Mustela nigripes	L,E
COSTILLA	MAMMALS	FERRET, BLACK-FOOTED	Mustela nigripes	L,E
CUSTER	BIRDS	FALCON, PEREGRINE	Falco peregrinus	L,E
		OWL, MEXICAN SPOTTED	Strix occidentalis lucida	L,T,CH
	FISHES	TROUT, GREENBACK CUTTHROAT	Salmo clarki stomias	L,T
DELTA	BIRDS	EAGLE, BALD	Haliaeetus leucocephalus	L,T
		FALCON, PEREGRINE	Falco peregrinus	L,E
	FISHES	SQUAWFISH, COLORADO	Ptychocheilus lucius	L,CH
		SUCKER, RAZORBACK	Xyrauchen texanus	L,E,CH
	MAMMALS	FERRET, BLACK-FOOTED	Mustela nigripes	L,E
	PLANTS	CACTUS, SPINELESS HEDGEHOG	Echinocereus triglochidiatus var. inermis	L,E
		CACTUS, UINTA BASIN HOOKLESS	Sclerocactus glaucus(=Echinocactus g.,S. whipplei)	L,T
		WILD-BUCKWHEAT, CLAY-LOVING	Eriogonum pelinophilum	L,E,CH
DOLORES	BIRDS	EAGLE, BALD	Haliaeetus leucocephalus	L,T
		OWL, MEXICAN SPOTTED	Strix occidentalis lucida	L,T,CH
	MAMMALS	FERRET, BLACK-FOOTED	Mustela nigripes	L,E
DOUGLAS	BIRDS	EAGLE, BALD	Haliaeetus leucocephalus	L,T
	FISHES	TROUT, GREENBACK CUTTHROAT	Salmo clarki stomias	L,T
	INSECTS	SKIPPER, PAWNEE MONTANE	Hesperia leonardus (=pawnee) montana	L,T
EAGLE	BIRDS	EAGLE, BALD	Haliaeetus leucocephalus	L,T
	INSECTS	BUTTERFLY, UNCOMPAHGRE FRITILLARY	Boloria acrocnema	L,E
EL PASO	BIRDS	EAGLE, BALD	Haliaeetus leucocephalus	L,T
		FALCON, PEREGRINE	Falco peregrinus	L,E
		OWL, MEXICAN SPOTTED	Strix occidentalis lucida	L,T,CH

Key: L - Listed, P - Proposed, E - Endangered, T - Threatened, CH - Critical Habitat

IV. COUNTY/SPECIES LIST CONTINUED

The following list identifies federally listed or proposed U.S. species by State and County. It has been updated through September 1, 1997.

State/County	Group name	Inverse name	Scientific name	Action/ Status
	FISHES	TROUT, GREENBACK CUTTHROAT	Salmo clarki stomias	L,T
	BIRDS	EAGLE, BALD	Haliaeetus leucocephalus	L,T
FREMONT	BIRDS	OWL, MEXICAN SPOTTED	Strix occidentalis lucida	L,T,CH
GARFIELD	BIRDS	EAGLE, BALD	Haliaeetus leucocephalus	L,T
		FALCON, PEREGRINE	Falco peregrinus	L,E
	FISHES	SQUAWFISH, COLORADO	Ptychocheilus lucius	L,CH
		SUCKER, RAZORBACK	Xyrauchen texanus	L,E,CH
	MAMMALS	FERRET, BLACK-FOOTED	Mustela nigripes	L,E
	PLANTS	CACTUS, UINTA BASIN HOOKLESS	Sclerocactus glaucus(=Echinocactus g.,S. whipplei)	L,T
GRAND	BIRDS	EAGLE, BALD	Haliaeetus leucocephalus	L,T
	PLANTS	BEARDTONGUE, PENLAND	Penstemon penlandii	L,E
		MILK-VETCH, OSTERHOUT	Astragalus osterhoutii	L,E
GUNNISON	BIRDS	EAGLE, BALD	Haliaeetus leucocephalus	L,T
		FALCON, PEREGRINE	Falco peregrinus	L,E
	INSECTS	BUTTERFLY, UNCOMPAHGRE FRITILLARY	Boloria acrocnema	L,E
	MAMMALS	FERRET, BLACK-FOOTED	Mustela nigripes	L,E
HINSDALE	BIRDS	EAGLE, BALD	Haliaeetus leucocephalus	L,T
		OWL, MEXICAN SPOTTED	Strix occidentalis lucida	L,T,CH
	INSECTS	BUTTERFLY, UNCOMPAHGRE FRITILLARY	Boloria acrocnema	L,E
HUERFANO	BIRDS	EAGLE, BALD	Haliaeetus leucocephalus	L,T
		FALCON, PEREGRINE	Falco peregrinus	L,E
		OWL, MEXICAN SPOTTED	Strix occidentalis lucida	L,T,CH
	FISHES	TROUT, GREENBACK CUTTHROAT	Salmo clarki stomias	L,T
JACKSON	BIRDS	EAGLE, BALD	Haliaeetus leucocephalus	L,T
		FALCON, PEREGRINE	Falco peregrinus	L,E
	PLANTS	PHACELIA, NORTH PARK	Phacelia formosula	L,E
JEFFERSON	BIRDS	EAGLE, BALD	Haliaeetus leucocephalus	L,T
	INSECTS	SKIPPER, PAWNEE MONTANE	Hesperia leonardus (=pawnee) montana	L,T
	PLANTS	LADIES'-TRESSES, UTE	Spiranthes diluvialis	L,T
KIOWA	BIRDS	EAGLE, BALD	Haliaeetus leucocephalus	L,T
LA PLATA	BIRDS	EAGLE, BALD	Haliaeetus leucocephalus	L,T
		FALCON, PEREGRINE	Falco peregrinus	L,E
		OWL, MEXICAN SPOTTED	Strix occidentalis lucida	L,T,CH
	MAMMALS	FERRET, BLACK-FOOTED	Mustela nigripes	L,E
	PLANTS	CACTUS, KNOWLTON	Pediocactus knowltonii	L,E
LAKE	BIRDS	OWL, MEXICAN SPOTTED	Strix occidentalis lucida	L,T,CH
	FISHES	TROUT, GREENBACK CUTTHROAT	Salmo clarki stomias	L,T
	INSECTS	BUTTERFLY, UNCOMPAHGRE FRITILLARY	Boloria acrocnema	L,E
LARIMER	BIRDS	EAGLE, BALD	Haliaeetus leucocephalus	L,T
		FALCON, PEREGRINE	Falco peregrinus	L,E
	FISHES	TROUT, GREENBACK CUTTHROAT	Salmo clarki stomias	L,T
LAS ANIMAS	BIRDS	EAGLE, BALD	Haliaeetus leucocephalus	L,T
LINCOLN	BIRDS	EAGLE, BALD	Haliaeetus leucocephalus	L,T
LOGAN	BIRDS	EAGLE, BALD	Haliaeetus leucocephalus	L,T
MESA	BIRDS	EAGLE, BALD	Haliaeetus leucocephalus	L,T
		FALCON, PEREGRINE	Falco peregrinus	L,E
	FISHES	CHUB, BONYTAIL	Gila elegans	L,E,CH
		CHUB, HUMPBACK	Gila cypha	L,E,CH
		SQUAWFISH, COLORADO	Ptychocheilus lucius	L,CH
		SUCKER, RAZORBACK	Xyrauchen texanus	L,E,CH
	MAMMALS	FERRET, BLACK-FOOTED	Mustela nigripes	L,E
	PLANTS	CACTUS, SPINELESS HEDGEHOG	Echinocereus triglochidiatus var. inermis	L,E
		CACTUS, UINTA BASIN HOOKLESS	Sclerocactus glaucus(=Echinocactus g.,S. whipplei)	L,T
MOFFAT	BIRDS	EAGLE, BALD	Haliaeetus leucocephalus	L,T
		FALCON, PEREGRINE	Falco peregrinus	L,E
		OWL, MEXICAN SPOTTED	Strix occidentalis lucida	L,T,CH
	FISHES	CHUB, BONYTAIL	Gila elegans	L,E,CH
		CHUB, HUMPBACK	Gila cypha	L,E,CH

Key: L - Listed, P - Proposed, E - Endangered, T - Threatened, CH - Critical Habitat

IV. COUNTY/SPECIES LIST CONTINUED

The following list identifies federally listed or proposed U.S. species by State and County. It has been updated through September 1, 1997.

State/County	Group name	Inverse name	Scientific name	Action/ Status
		SQUAWFISH, COLORADO	Ptychocheilus lucius	L,CH
		SUCKER, RAZORBACK	Xyrauchen texanus	L,E,CH
	MAMMALS	FERRET, BLACK-FOOTED	Mustela nigripes	L,E
MONTEZUMA	BIRDS	EAGLE, BALD	Haliaeetus leucocephalus	L,T
		FALCON, PEREGRINE	Falco peregrinus	L,E
		OWL, MEXICAN SPOTTED	Strix occidentalis lucida	L,T,CH
	FISHES	SQUAWFISH, COLORADO	Ptychocheilus lucius	L,CH
	MAMMALS	FERRET, BLACK-FOOTED	Mustela nigripes	L,E
	PLANTS	CACTUS, MESA VERDE	Sclerocactus mesae-verdae (=Pediocactus m.)	L,T
		MILK-VETCH, MANCOS	Astragalus humillimus	L,E
MONTROSE	BIRDS	EAGLE, BALD	Haliaeetus leucocephalus	L,T
		FALCON, PEREGRINE	Falco peregrinus	L,E
		OWL, MEXICAN SPOTTED	Strix occidentalis lucida	L,T,CH
	MAMMALS	FERRET, BLACK-FOOTED	Mustela nigripes	L,E
	PLANTS	CACTUS, SPINELESS HEDGEHOG	Echinocereus triglochidiatus var. inermis	L,E
		CACTUS, UINTA BASIN HOOKLESS	Sclerocactus glaucus(=Echinocactus g.,S. whipplei)	L,T
		WILD-BUCKWHEAT, CLAY-LOVING	Eriogonum pelinophilum	L,E,CH
MORGAN	BIRDS	EAGLE, BALD	Haliaeetus leucocephalus	L,T
	PLANTS	LADIES'-TRESSES, UTE	Spiranthes diluvialis	L,T
OTERO	BIRDS	EAGLE, BALD	Haliaeetus leucocephalus	L,T
OURAY	BIRDS	EAGLE, BALD	Haliaeetus leucocephalus	L,T
		FALCON, PEREGRINE	Falco peregrinus	L,E
		OWL, MEXICAN SPOTTED	Strix occidentalis lucida	L,T,CH
	INSECTS	BUTTERFLY, UNCOMPAHGRE FRITILLARY	Boloria acrocnema	L,E
	MAMMALS	FERRET, BLACK-FOOTED	Mustela nigripes	L,E
PARK	BIRDS	EAGLE, BALD	Haliaeetus leucocephalus	L,T
	FISHES	TROUT, GREENBACK CUTTHROAT	Salmo clarki stomias	L,T
	INSECTS	SKIPPER, PAWNEE MONTANE	Hesperia leonardus (=pawnee) montana	L,T
	PLANTS	MUSTARD, PENLAND ALPINE FEN	Eutrema penlandii	L,T
PITKIN	INSECTS	BUTTERFLY, UNCOMPAHGRE FRITILLARY	Boloria acrocnema	L,E
PROWERS	BIRDS	EAGLE, BALD	Haliaeetus leucocephalus	L,T
PUEBLO	BIRDS	EAGLE, BALD	Haliaeetus leucocephalus	L,T
		OWL, MEXICAN SPOTTED	Strix occidentalis lucida	L,T,CH
RIO BLANCO	BIRDS	EAGLE, BALD	Haliaeetus leucocephalus	L,T
	FISHES	SQUAWFISH, COLORADO	Ptychocheilus lucius	L,CH
	MAMMALS	FERRET, BLACK-FOOTED	Mustela nigripes	L,E
	PLANTS	BLADDERPOD, DUDLEY BLUFFS	Lesquerella congesta	L,T
		TWINPOD, DUDLEY BLUFFS	Physaria obcordata	L,T
RIO GRANDE	BIRDS	EAGLE, BALD	Haliaeetus leucocephalus	L,T
		FALCON, PEREGRINE	Falco peregrinus	L,E
		OWL, MEXICAN SPOTTED	Strix occidentalis lucida	L,T,CH
	MAMMALS	FERRET, BLACK-FOOTED	Mustela nigripes	L,E
ROUTT	BIRDS	EAGLE, BALD	Haliaeetus leucocephalus	L,T
	MAMMALS	FERRET, BLACK-FOOTED	Mustela nigripes	L,E
SAGUACHE	BIRDS	EAGLE, BALD	Haliaeetus leucocephalus	L,T
		FALCON, PEREGRINE	Falco peregrinus	L,E
		OWL, MEXICAN SPOTTED	Strix occidentalis lucida	L,T,CH
	INSECTS	BUTTERFLY, UNCOMPAHGRE FRITILLARY	Boloria acrocnema	L,E
	MAMMALS	FERRET, BLACK-FOOTED	Mustela nigripes	L,E
SAN JUAN	BIRDS	EAGLE, BALD	Haliaeetus leucocephalus	L,T
		OWL, MEXICAN SPOTTED	Strix occidentalis lucida	L,T,CH
SAN MIGUEL	BIRDS	EAGLE, BALD	Haliaeetus leucocephalus	L,T
		FALCON, PEREGRINE	Falco peregrinus	L,E
		OWL, MEXICAN SPOTTED	Strix occidentalis lucida	L,T,CH
	INSECTS	BUTTERFLY, UNCOMPAHGRE FRITILLARY	Boloria acrocnema	L,E
	MAMMALS	FERRET, BLACK-FOOTED	Mustela nigripes	L,E
	PLANTS	CACTUS, SPINELESS HEDGEHOG	Echinocereus triglochidiatus var. inermis	L,E
SEDGWICK	BIRDS	EAGLE, BALD	Haliaeetus leucocephalus	L,T

Key: L - Listed, P - Proposed, E - Endangered, T - Threatened, CH - Critical Habitat

IV. COUNTY/SPECIES LIST CONTINUED

The following list identifies federally listed or proposed U.S. species by State and County. It has been updated through September 1, 1997.

State/County	Group name	Inverse name	Scientific name	Action/ Status
SUMMIT	BIRDS	EAGLE, BALD	Haliaeetus leucocephalus	L,T
	PLANTS	MUSTARD, PENLAND ALPINE FEN	Eutrema penlandii	L,T
TELLER	BIRDS	FALCON, PEREGRINE	Falco peregrinus	L,E
		OWL, MEXICAN SPOTTED	Strix occidentalis lucida	L,T,CH
	INSECTS	SKIPPER, PAWNEE MONTANE	Hesperia leonardus (=pawnee) montana	L,T
WASHINGTON	BIRDS	EAGLE, BALD	Haliaeetus leucocephalus	L,T
WELD	BIRDS	CRANE, WHOOPING	Grus americana	L,E,CH
		EAGLE, BALD	Haliaeetus leucocephalus	L,T
	PLANTS	LADIES'-TRESSES, UTE	Spiranthes diluvialis	L,T
YUMA	BIRDS	EAGLE, BALD	Haliaeetus leucocephalus	L,T

Key: L - Listed, P - Proposed, E - Endangered, T - Threatened, CH - Critical Habitat

ADDENDUM B - HISTORIC PROPERTIES (RESERVED)

Instructions related to historic preservation have not been included in the permit at this time. EPA may modify the permit to include such provisions at a later date. This does not relieve applicants or permittees of their responsibility to comply with applicable State, Tribal or local laws for the protection of historic properties.

This page was intentionally left blank for duplex printing.

THIS FORM REPLACES PREVIOUS FORM 3510-6 (8-98)
See Reverse for Instructions

Form Approved. OMB No. 2040-0188

NPDES FORM

United States Environmental Protection Agency
Washington, DC 20460

Notice of Intent (NOI) for Storm Water Discharges Associated with CONSTRUCTION ACTIVITY Under a NPDES General Permit

Submission of this Notice of Intent constitutes notice that the party identified in Section I of this form intends to be authorized by a NPDES permit issued for storm water discharges associated with construction activity in the State/Indian Country Land identified in Section II of this form. Submission of this Notice of Intent also constitutes notice that the party identified in Section I of this form meets the eligibility requirements in Part I.B. of the general permit (including those related to protection of endangered species determined through the procedures in Addendum A of the general permit), understands that continued authorization to discharge is contingent on maintaining permit eligibility, and that implementation of the Storm Water Pollution Prevention Plan required under Part IV of the general permit will begin at the time the permittee commences work on the construction project identified in Secion II below. IN ORDER TO OBTAIN AUTHORIZATION, ALL INFORMATION REQUESTED MUST BE INCLUDED ON THIS FORM. SEE INSTRUCTIONS ON BACK OF FORM.

I. Owner/Operator (Applicant) Information

Name: _____ Phone: _____

Address: _____ Status of Owner/Operator: P

City: _____ State: ____ Zip Code: _____–____

II. Project/Site Information

Is the facility located on Indian Country Lands? Yes ☐ No ☐

Project Name: _____

Project Address/Location: _____

City: _____ State: ____ Zip Code: _____–____

Latitude: _____ Longitude: _____ County: _____

Has the Storm Water Pollution Prevention Plan (SWPPP) been prepared? Yes ☐ No ☐

Optional: Address of location of SWPPP for viewing ☐ Address in Section I above ☐ Address in Section II above ☐ Other address (if known) below:

SWPPP Address: _____ Phone: _____

City: _____ State: ____ Zip Code: _____–____

Name of Receiving Water: _____

Estimated Construction Start Date: Month Day Year

Estimated Completion Date: Month Day Year

Estimate of area to be disturbed (to nearest acre): _____

Estimate of Likelihood of Discharge (choose only one):

1. ☐ Unlikely
2. ☐ Once per month
3. ☐ Once per week
4. ☐ Once per day
5. ☐ Continual

Based on instruction provided in Addendum A of the permit, are there any listed endangered or threatened species, or designated critical habitat in the project area?

Yes ☐ No ☐

I have satisfied permit eligibility with regard to protection of endangered species through the indicated section of Part I.B.3.e.(2) of the permit (check one or more boxes):

(a) ☐ (b) ☐ (c) ☐ (d) ☐

III. Certification

I certify under penalty of law that this document and all attachments were prepared under my direction or supervision in accordance with a system designed to assure that qualified personnel properly gather and evaluate the information submitted. Based on my inquiry of the person or persons who manage this system, or those persons directly responsible for gathering the information, the information submitted is, to the best of my knowledge and belief, true, accurate, and complete. I am aware that there are significant penalties for submitting false information, including the possibility of fine and imprisonment for knowing violations.

Print Name: _____ Date: _____

Signature: _____

Instructions – EPA Form 3510-9

Form Approved. OMB No. 2040-0188

Notice of Intent (NOI) for Storm Water Discharges Associated with Construction Activity to be Covered Under a NPDES Permit

Who Must File a Notice of Intent Form

Under the provisions of the Clean Water Act, as amended, (33 U.S.C. 1251 et.seq.; the Act), except as provided by Part I.B.3 the permit, Federal law prohibits discharges of pollutants in storm water from construction activities without a National Pollutant Discharge Elimination System Permit. Operator(s) of construction sites where 5 or more acres are disturbed, smaller sites that are part of a larger common plan of development or sale where there is a cumulative disturbance of at least 5 acres, or any site designated by the Director, must submit an NOI to obtain coverage under an NPDES Storm Water Construction General Permit. If you have questions about whether you need a permit under the NPDES Storm Water program, or if you need information as to whether a particular program is administered by EPA or a State agency, write to or telephone the Notice of Intent Processing Center at (703) 931-3230.

Where to File NOI Form

NOIs must be sent to the following address:

Storm Water Notice of Intent (4203)
USEPA
401 M. Street, SW
Washington, D.C. 20460

Do not send Storm Water Pollution Prevention Plans (SWPPPs) to the above address. For overnight/express delivery of NOIs, please include the room number 2104 Northeast Mall and phone number (202) 260-9541 in the address.

When to File

This form must be filed at least 48 hours before construction begins.

Completing the Form

OBTAIN AND READ A COPY OF THE APPROPRIATE EPA STORM WATER CONSTRUCTION GENERAL PERMIT FOR YOUR AREA. To complete this form, type or print, using uppercase letters, in the appropriate areas only. Please place each character between the marks (abbreviate if necessary to stay within the number of characters allowed for each item). Use one space for breaks between words, but not for punctuation marks unless they are needed to clarify your response. If you have any questions on this form, call the Notice of Intent Processing Center at (703) 931-3230.

Section I. Facility Owner/Operator (Applicant) Information

Provide the legal name, mailing address, and telephone number of the person, firm, public organization, or any other entity that meet either of the following two criteria: (1) they have operational control over construction plans and specifications, including the ability to make modifications to those plans and specifications; or (2) they have the day-to-day operational control of those activities at the project necessary to ensure compliance with SWPPP requirements or other permit conditions. Each person that meets either of these criteria must file this form. Do not use a colloquial name. Correspondence for the permit will be sent to this address.

Enter the appropriate letter to indicate the legal status of the owner/operator of the project: F = Federal; S = State; M = Public (other than federal or state); P = Private.

Section II. Project/Site Information

Enter the official or legal name and complete street address, including city, county, state, zip code, and phone number of the project or site. If it lacks a street address, indicate with a general statement the location of the site (e.g., Intersection of State Highways 61 and 34). Complete site information must be provided for permit coverage to be granted.

The applicant must also provide the latitude and longitude of the facility in degrees, minutes, and seconds to the nearest 15 seconds. The latitude and longitude of your facility can be located on USGS quadrangle maps. Quadrangle maps can be obtained by calling 1-800 USA MAPS. Longitude and latitude may also be obtained at the Census Bureau Internet site: http://www.census.gov/cgi-bin/gazetteer.

Latitude and longitude for a facility in decimal form must be converted to degrees, minutes and seconds for proper entry on the NOI form. To convert decimal latitude or longitude to degrees, minutes, and seconds, follow the steps in the following example.

Convert decimal latitude 45.1234567 to degrees, minutes, and seconds.

1) The numbers to the left of the decimal point are degrees.
2) To obtain minutes, multiply the first four numbers to the right of the decimal point by 0.006. 1234 x .006 = 7.404.
3) The numbers to the left of the decimal point in the result obtained in step 2 are the minutes: 7'.
4) To obtain seconds, multiply the remaining three numbers to the right of the decimal from the result in step 2 by 0.06: 404 x 0.06 = 24.24. Since the numbers to the right of the decimal point are not used, the result is 24".
5) The conversion for 45.1234 = 45° 7' 24".

Indicate whether the project is on Indian Country Lands.

Indicate if the Storm Water Pollution Prevention Plan (SWPPP) has been developed. Refer to Part IV of the general permit for information on SWPPPs. To be eligible for coverage, a SWPPP must have been prepared.

Optional: Provide the address and phone number where the SWPPP can be viewed if different from addresses previously given. Check appropriate box.

Enter the name of the closest water body which receives the project's construction storm water discharge.

Enter the estimated construction start and completion dates using four digits for the year (i.e. 05/27/1998).

Enter the estimated area to be disturbed including but not limited to: grubbing, excavation, grading, and utilities and infrastructure installation. Indicate to the nearest acre; if less than 1 acre, enter "1." Note: 1 acre = 43,560 sq. ft.

Indicate your best estimate of the likelihood of storm water discharges from the project. EPA recognizes that actual discharges may differ from this estimate due to unforeseen or chance circumstances.

Indicate if there are any listed endangered or threatened species, or designated critical habitat in the project area.

Indicate which Part of the permit that the applicant is eligible with regard to protection of endangered or threatened species, or designated critical habitat.

Section III. Certification

Federal Statutes provide for severe penalties for submitting false information on this application form. Federal regulations require this application to be signed as follows:

For a corporation: by a responsible corporate officer, which means: (i) president, secretary, treasurer, or vice president of the corporation in charge of a principal business function, or any other person who performs similar policy or decision making functions, or (ii) the manager of one or more manufacturing, production, or operating facilities employing more than 250 persons or having gross annual sales or expenditures exceeding $25 million (in second-quarter 1980 dollars), if authority to sign documents has been assigned or delegated to the manager in accordance with corporate procedures;

For a partnership or sole proprietorship: by a general partner of the proprietor, or

For a municipality, state, federal, or other public facility: by either a principal executive or ranking elected official. An unsigned or undated NOI form will not be granted permit coverage.

Paperwork Reduction Act Notice

Public reporting burden for this application is estimated to average 3.7 hours. This estimate includes time for reviewing instructions, searching existing data sources, gathering and maintaining the data needed, and completing and reviewing the collection of information. An agency may not conduct or sponsor, and a person is not required to respond to, a collection of information unless it displays a currently valid OMB control number. Send comments regarding the burden estimate, any other aspect of the collection of information, or suggestions for improving this form, including any suggestions which may increase or reduce this burden to: Director, OPPE Regulatory Information Division (2137), U.S. Environmental Protection Agency, 401 M Street, SW, Washington, D.C. 20460. Include the OMB control number on any correspondence. Do not send the completed form to this address.

TABLE OF CONTENTS

General Facility Information

1.0 Overview
- 1.1 Introduction
- 1.2 Objectives

2.0 Storm Water Pollution Prevention Team

3.0 Potential Sources of Storm Water Pollution
- 3.1 Site Map
- 3.2 Inventory of Exposed Materials
- 3.3 List of Past Spills and Leaks
- 3.4 Summary of Sampling Data

4.0 Best Management Practices
- 4.1 Non-Structural Control Measures
- 4.2 Structural Control Measures

5.0 Non-Storm Water Discharges

6.0 Record Keeping and Reporting
- 6.1 Annual Report
- 6.2 Sample Record Keeping and Reporting Forms

7.0 Certification Statement

GENERAL FACILITY INFORMATION

Name of Facility:

Facility Address:

Facility Contact:

Name: _____

Title: _____

Telephone: _____

Mailing Address: _____

_____

Owner: _____

Operator: _____
(if different from Owner)

Standard Industrial classification (SIC) Code:_____

Permit Information:

Type: ( ) General (X) Individual

Designated Name:

Permit Number: _____

Effective Date of Coverage: _____

Number of Storm Water Outfalls:

Receiving Waters: Arkansas River Basin

Emergency Contact:

Name: _____

Telephone: _____

1.0 OVERVIEW

1.1 INTRODUCTION

This storm water pollution prevention plan (SWPPP) covers the operations at _____. It has been developed as required under Part I.B of National Pollutant Discharge Elimination System (NPDES) general permit for storm water discharges and in accordance with good engineering practices. This SWPPP describes this facility and its operations, identifies potential sources of storm water pollution at the facility, recommends appropriate best management practices (BMPs) or pollution control measures to reduce the discharge of pollutants in storm water runoff, and provides for periodic review of this SWPPP.

This SWPPP becomes effective as of _____. The non-structural controls will be implemented by _____. Structural controls will be in place by _____.

The Government has operational control over the specifications for all areas of the project. The Contractor has operational control over day-to-day activities for all areas of the project. The references listed above shall be considered part of the Storm Water Pollution Prevention Plan (SWPPP).

1.2 OBJECTIVES

The goal of the storm water permit program is to improve the quality of surface waters by reducing the amount of pollutants potentially contained in the storm water runoff being discharged. Industrial facilities subject to an NPDES permit must prepare and implement an SWPPP for their facility.

The objective of this SWPPP is three-fold:

1. To identify potential sources of pollution at

2. To describe best management practices (BMPs) which are to be used at

3. To provide other elements such as, but not limited to, a facility inspection program, site compliance evaluation program, record keeping and reporting program that will help _____ comply with the terms and conditions of their storm water discharge permit.

2.0 STORM WATER POLLUTION PREVENTION TEAM

The storm water pollution prevention team is responsible for developing, implementing, maintaining, and revising this SWPPP. The members of the team are familiar with the management and operations of _____.

The member(s) of the team and their primary responsibilities (i.e. implementing, maintaining, record keeping, submitting reports, conducting inspections, employee training, conducting the annual compliance evaluation, testing for non-storm water discharges, signing the required certifications) are as follows:

Name & Title	Responsibility

3.0 POTENTIAL SOURCES OF POLLUTANTS

3.1 SITE MAP

Figure 1 presents a site map of the facility showing the following features (as required by the permit):

- Property boundaries
- Buildings and other permanent structures
- Storage or disposal areas for significant materials
- Storm water discharge outfalls
- Location of storm water inlets contributing to each outfall
- Outlines of drainage areas contributing to each outfall
- Location of NPDES permitted discharges other than storm water

- Structural runoff controls and storm water treatment facilities
- Areas of vegetation
- Areas of exposed and/or erodible soils
- Impervious surfaces (roof tops, asphalt, concrete)
- Names and locations of receiving waters
- Areas of known or suspected impacts on surface waters as designated under Part 201 of the Natural Resources and Environmental Protection Act of 1994, Public Act 451 (formerly Act 307).
- Locations where the following activities are exposed to storm water:
  - Fixed fueling operations
  - Vehicle and equipment maintenance and/or cleaning areas
  - Loading/unloading areas
  - Waste storage or disposal areas
  - Liquid storage tanks
  - Equipment operating areas
  - Storage areas
- Any other areas deemed appropriate

FIGURE 1.

3.2 INVENTORY OF EXPOSED MATERIALS

The permit requires a general inventory of significant materials on site. For each significant material on site an evaluation is to be conducted to determine the potential for these materials to be contributed to the runoff being discharged from the facility. Areas to focus on may include:

- Loading and unloading areas
- Other material handling operations (fuel pumps, etc.)
- Outdoor storage areas
- Processes which generate dust or particulate matter
- Roof vents, stacks, and blowers
- Waste generating areas
- Waste disposal practices
- Maintenance and cleaning practices for vehicles and equipment
- Sites of environmental contamination
- Areas where spills of polluting materials have occurred in the past three years
- Any other areas deemed appropriate

Include the ways in which these materials might be exposed to the storm water runoff. And identify the outfalls from which the materials may be discharged if a release should occur.

Area/Process	**Material**	**Method of Exposure**	**Outfall**
Trenching	**Sediment**	**Erosion during excavation**	

3.3 LIST OF PAST SPILLS AND LEAKS

The permit requires a listing of oil and other polluting materials that have been spilled or leaked over the three years prior to the completion of the plan be included in the plan. Also include the date, volume of materials, the exact location of each release, and the actions taken to clean up the materials and/or prevent exposure of the materials to storm water runoff or contamination of surface waters of the state. (If there have been no spills of polluting materials, state that in this section).
_____has no information on past spills in the area of our work.

DATE	MATERIAL	VOLUME	LOCATION	ACTIONS TAKEN

3.4 SUMMARY OF SAMPLING DATA

Not all facilities will have sampling data available. If there is data available for your facility it is to be included in the SWPPP. If there is no data available, please state that in this section.

The following is a summary of the sampling data available for

_____

Include sampling date, sampling location, parameters measured, range of concentrations for each parameter, sample collector, sample analyst, and a list of any changes in conditions that suggest the storm water data is no longer indicative of the current conditions at the facility.

_____ has no information on sample data from the area we will be working in.

4.0 BEST MANAGEMENT PRACTICES

Storm water management controls, or best management practices (BMPs), will be implemented to reduce the amount of pollutants in storm water discharged from_____

The permit requires that the following categories of BMPs to be considered, and selected where applicable.

4.1 NON-STRUCTURAL CONTROLS

Non-structural controls are practices that are specifically intended to reduce the amount of pollution getting into surface waters. There are generally implemented to address the problem at the source. They do not require any structural changes to the facility. The following Non-Structural Controls have been selected for implementation:

- **Preventive Maintenance**
  Preventive Maintenance involves the regular inspection, testing, and cleaning of facility equipment and operational systems. These inspections will help to uncover conditions, which might lead to a release of materials. Thus, allowing for maintenance to prevent such a release.

  The following equipment/activities will be included in the preventive maintenance program. (Examples: fuel pumps, storage tanks for waste fluids, all structural controls, etc.)

Equipment	Tasks	Frequency
Trencher	**Inspect**	**Daily**
Trucks	**Inspect**	**Daily**
Loader	**Inspect**	**Daily**

- **Semi-annual Comprehensive Inspections**
  Comprehensive inspections of the facility (equipment, plant areas, and structural controls) are required by the permit. These inspections must occur at least once every six months. Records of the inspections must be kept on file with the SWPPP.

  The following is a description of our facilities comprehensive inspection schedule.

  Area will be inspected at the beginning of project and weekly until complete.

  Any time of heavy moisture site will be inspected for damage or erosion.

- **Good Housekeeping Practices**
  Good housekeeping practices are designed to maintain a clean and orderly work environment. This will reduce the potential for significant materials to come contact with storm water.

  The follow practices are included in our good housekeeping routine. (Examples: keeping the pump area clean, keeping an accurate inventory, sweeping paved areas and floors, picking up repair facilities, etc.)

Area/Equipment	Tasks	Frequency
Trenching	Inspect	Daily
Cable laying	Clean up	Daily
Splicing	Clean up	Daily
Backfill	Compact	Daily
Seeding	Wet spray	One time

- **Sedimentation Control Measures**
  There may be certain areas at the facility that are prone to soil erosion. These areas need to be protected, and the soil kept out of the storm water discharge. (If there are no areas prone to soil erosion state that in this section.)

Area of Concern	Control Measures
Trench Area	Backfill and compact daily
Trench Area	Straw Bales
Trench Area	Reseed disturbed areas

- **Employee Training**
  Employee training will be a major component in ensuring the success of the facilities SWPPP. The more knowledgeable all employees are about the facility's SWPPP and what is expected of them, the greater the chance that the plan will be successful.

  The following is a description of the employee training programs to be implemented to inform appropriate personnel at all levels of

responsibility of the components and goals of the SWPPP. (Examples: good housekeeping practices, spill prevention and response procedures, waste minimization practices, informing customers of facility policies, etc.)

Topic	**Employees Included**	**Frequency**
House Keeping	_____and Subs	Weekly

- **List of Significant Materials Still Present**
  After the implementation of the non-structural controls the following significant materials are expected to be present in the storm water discharge. These materials will be addressed through the use of structural controls.

  After the implementation of non-structural controls the following materials are expected to still be present in the storm water being discharged from the facility. (If there will be no significant materials present after the implementation of non-structural controls, state that in this section.)
  There will be no additional discharge that _____control of.

Material	**Location**	**Outfall**	**Planned Control Measure**

4.2 STRUCTURAL CONTROLS

Structural control measures will be necessary to control any pollutants that are still present in the storm water after the non-structural controls have been implemented. These types of controls are physical features that control and prevent storm water pollution. They can range from preventive measures to collection structures to treatment systems. Structural controls will require construction of a physical feature or barrier. (If no structural control measures are needed at the facility, state that in this section).

- **Preventive Measures**
  Preventive measures are controls that are intended to prevent the exposure of storm water to contaminate.

  The following preventive measures have been chosen for this facility. (Examples: signs and labels, safety posts, fences, a security system, coverings over areas of concern, etc.)

Area	Material	Control Measure
Trench	Sediment	Backfill and compact daily

- **Diversions**
  Diversion practices are structures (including grading and paving) that are used to divert storm water away from high-risk areas and prevent contaminants from mixing with the runoff, or to channel contaminated storm water to a treatment facility or containment area.

  The following areas are to be protected through the use of diversion structures. (Examples: storage areas, processing areas, past spills, etc.)

  None at this time will evaluate as work progresses.

Area	Material	Control Measure

- **Containment**

  Containment areas are structures designed to hold pollutants or contaminated storm water to prevent it from being discharged to surface waters. These structures can range from drip pans to large containment areas required for Pollution Incident Prevention Plans (PIPP) or Spill Control and Countermeasures (SPCC) plans.

  Containment structures will be/have been installed in the following areas. (Examples: containment around waste fluid storage areas, drip pans under valves and pipe connections, curbing around dismantling areas or parts storage areas, etc.)**NA**

Area	Material	Control Measure

- **Other Controls**

  There are other control measures that can be used that may not fit into one of the previously mentioned categories. The use of such controls is encouraged.

  The following additional controls have to be used at the facility. (Examples: sumps, oil/water separators, sand filters, vegetative filters, basins [collection, retention, detention], reduce, reuse. and recycle materials, etc.) **NA**

Area	Material	Control Measure

5.0 NON-STORM WATER DISCHARGES

The permit requires that all discharge locations be evaluated for the presence of non-storm water discharges. Any unauthorized storm water dischargers must be eliminated, or covered under another National Pollutant Discharge Elimination System (NPDES) permit. Certification that there are no unauthorized discharges must be submitted to the appropriate district supervisor. The following is a list of non-storm water discharges authorized under the general permit.

> Fire fighting activities, fire hydrant flushing, potable water sources including waterline flushing, irrigation drainage, lawn watering, uncontaminated ground water, foundation or footing drains, building wash down where no detergents were used, air conditioning condensate, dust control spraying.

The following table summarizes the evaluation results.

Will evaluate but in area of construction non storm water discharges are unlikely.

Date	**Outfall**	**Method**	**Evaluator**	**Observations** (are there any non-storm water discharges? Authorized or unauthorized?)	**Date Corrected**

CERTIFICATION OF EVALUATION OF NON-STORM WATER DISCHARGES

I certify under penalty of law that the storm water drainage system in this SWPPP has been tested or evaluated for the presence of non-storm water discharges either by me, or under my direction and supervision. To the best of my knowledge and belief, the information submitted is true, accurate, and complete. And at the time this plan was completed no unauthorized discharges were present. I am aware that there are significant penalties for submitting false information, including the possibility of fine or imprisonment for knowing violations.

_____

_____
(Signature) (Date)

_____

_____
(Printed Name) (Title)

6.0 RECORD KEEPING AND REPORTING

The permit requires that records of all preventive maintenance inspections, the semi-annual comprehensive site inspections, records of employee training sessions, and the annual report be retained at _____ for at least three years after the permit coverage expires.

These records must be made available, upon request, to a representative of the regulating authority. In the case of facilities which discharge storm water to a municipal separate storm sewer system, the records must also be made available to the operator of the municipal system.

6.1 ANNUAL REPORT

The permit requires that _____prepare an annual report discussing the effectiveness of the SWPPP. This report should include any changes that have been made, the reason for the changes, any spills that occurred, what actions were taken as result of the spill, inspection results, and any other information relevant to the SWPPP. The annual report is to be retained on site.

6.2 SAMPLE RECORD KEEPING AND REPORTING FORMS

The following pages contain sample forms for the record keeping and reporting associated with the SWPPP. The following forms are examples; they are not required to be used by your facility.

Non-storm Water Inspection Report
Good Housekeeping
Preventive Maintenance
Storm Water Inspection Report

NON-STORM WATER INSPECTION REPORT

Date of Inspection: _____ Time: _____

Inspected by (printed name):
_____

Signature:
_____

Description of type of inspection (check those that apply):
 visual observation dye tests smoke tests TV line survey
 analysis of accurate schematics sampling/monitoring

Observations/Results:
_____

_____

_____

_____

_____

_____

_____

_____

_____

_____

Are there any non-storm water discharges? yes no

Is the discharge authorized under this permit? yes no

Is the discharge covered under another National Pollutant Discharge Elimination System (NPDES) permit? yes no

Are significant structural changes required to eliminate the discharge? yes no

GOOD HOUSEKEEPING

Date: _____ Time: _____

Inspected by (printed):

_____

Signature:

_____

Areas Inspected	Observations	Actions Taken
Parking areas		
Fuel pumps		
Outfalls		
Isles & walkways		
Dumpsters		
Grounds (in general)		

PREVENTIVE MAINTENANCE

Date: _____ Time: _____

Inspected by (printed):

_____

Signature:

_____

Areas Inspected	Observations	Actions Taken

COMPREHENSIVE INSPECTION

Date: _____ Time: _____

Inspected by (printed):

_____

Signature:

_____

Areas Inspected	Observations	Actions Taken
Storm water outfalls		
Property boundaries		
Grounds (in general)		
Parking lots		
Storage areas		
Dumpsters		
Waste storage areas		
Equipment		

7.0 CERTIFICATION OF THE SWPPP

I certify under penalty of law that this SWPPP has been developed in accordance with good engineering practices. To the best of my knowledge and belief, the information submitted is true, accurate, and complete. In addition, at the time this plan was completed no unauthorized discharges were present. I am aware that there are significant penalties for submitting false information, including the possibility of fine or imprisonment for knowing violations.

_____
(Signature of Operator)

_____ _____
(Printed Name) (Date)

_____ _____
(Signature of Corporate Officer) (Date)

_____ _____
(Printed Name) (Title)

STORM WATER POLLUTION PREVENTION PLAN CERTIFICATION

I certify under penalty of law that this document and all attachments were prepared under my direction or supervision in accordance with a system designed to assure that qualified personnel properly gathered and evaluated the information submitted. Based on my inquiry of the person or persons who manage the system, or those persons directly responsible for gathering the information, the information submitted is, to the best of my knowledge and belief, true, accurate, and complete. I am aware that there are significant penalties for submitting false information, including the possibility of fine and imprisonment for knowing violations.

_____ _____

Date

Authorized Representative
of the Contracting Officer

NPDES Permit Number: _____

THIS FORM REPLACES PREVIOUS FORM 3510-7 (8-92)

Please See Instructions Before Completing This Form

Form Approved. OMB No. 2040-0086
Approval expires: 8-31-98

NPDES FORM

United States Environmental Protection Agency
Washington, DC 20460

Notice of Termination (NOT) of Coverage Under a NPDES General Permit for Storm Water Discharges Associated with Industrial Activity

Submission of this Notice of Termination constitutes notice that the party identified in Section II of this form is no longer authorized to discharge storm water associated with industrial activity under the NPDES program. ALL NECESSARY INFORMATION MUST BE PROVIDED ON THIS FORM.

I. Permit Information

NPDES Storm Water General Permit Number: _____

Check Here if You are No Longer the Operator of the Facility: ☐

Check Here if the Storm Water Discharge is Being Terminated: ☐

II. Facility Operator Information

Name: _____ Phone: _____

Address: _____

City: _____ State: _____ ZIP Code: _____

III. Facility/Site Location Information

Name: _____

Address: _____

City: _____ State: _____ ZIP Code: _____

Latitude: _____ Longitude: _____ Quarter: _____ Section: _____ Township: _____ Range: _____

IV. Certification:

I certify under penalty of law that all storm water discharges associated with industrial activity from the identified facility that are authorized by a NPDES general permit have been eliminated or that I am no longer the operator of the facility or construction site. I understand that by submitting this Notice of Termination, I am no longer authorized to discharge storm water associated with industrial activity under this general permit, and that discharging pollutants in storm water associated with industrial activity to waters of the United States is unlawful under the Clean Water Act where the discharge is not authorized by a NPDES permit. I also understand that the submittal of this Notice of Termination does not release an operator from liability for any violations of this permit or the Clean Water Act.

Print Name: _____ Date: _____

Signature: _____

Instructions for Completing Notice of Termination (NOT) Form

Who May File a Notice of Termination (NOT) Form

Permittees who are presently covered under an EPA-issued National Pollutant Discharge Elimination System (NPDES) General Permit (including the 1995 Multi-Sector Permit) for Storm Water Dicharges Associated with Industrial Activity may submit a Notice of Termination (NOT) form when their facilities no longer have any storm water discharges associated with industrial activity as defined in the storm water regulations at 40 CFR 122.26(b)(14), or when they are no longer the operator of the facilities.

For construction activities, elimination of all storm water discharges associated with industrial activity occurs when disturbed soils at the construction site have been finally stabilized and temporary erosion and sediment control measures have been removed or will be removed at an appropriate time, or that all storm water discharges associated with industrial activity from the construction site that are authorized by a NPDES general permit have otherwise been eliminated. Final stabilization means that all soil-disturbing activities at the site have been completed, and that a uniform perennial vegetative cover with a density of 70% of the cover for unpaved areas and areas not covered by permanent structures has been established, or equivalent permanent stabilization measures (such as the use of riprap, gabions, or geotextiles) have been employed.

Where to File NOT Form

Send this form to the the following address:

Storm Water Notice of Termination (4203)
401 M Street, S.W.
Washington, DC 20460

Completing the Form

Type or print, using upper-case letters, in the appropriate areas only. Please place each character between the marks. Abbreviate if necessary to stay within the number of characters allowed for each item. Use only one space for breaks between words, but not for punctuation marks unless they are needed to clarify your response. If you have any questions about this form, telephone or write the Notice of Intent Processing Center at (703) 931-3230.

Instructions - EPA Form 3510-7
Notice of Termination (NOT) of Coverage Under The NPDES General Permit
for Storm Water Discharges Associated With Industrial Activity

Section I Permit Information

Enter the existing NPDES Storm Water General Permit number assigned to the facility or site identified in Section III. If you do not know the permit number, telephone or write your EPA Regional storm water contact person.

Indicate your reason for submitting this Notice of Termination by checking the appropriate box:

If there has been a change of operator and you are no longer the operator of the facility or site identified in Section III, check the corresponding box.

If all storm water discharges at the facility or site identified in Section III have been terminated, check the corresponding box.

Section II Facility Operator Information

Give the legal name of the person, firm, public organization, or any other entity that operates the facility or site described in this application. The name of the operator may or may not be the same name as the facility. The operator of the facility is the legal entity which controls the facility's operation, rather than the plant or site manager. Do not use a colloquial name. Enter the complete address and telephone number of the operator.

Section III Facility/Site Location Information

Enter the facility's or site's official or legal name and complete address, including city, state and ZIP code. If the facility lacks a street address, indicate the state, the latitude and longitude of the facility to the nearest 15 seconds, or the quarter section, township, and range (to the nearest quarter section) of the approximate center of the site.

Section IV Certification

Federal statutes provide for severe penalties for submitting false information on this application form. Federal regulations require this application to be signed as follows:

For a corporation: by a responsible corporate officer, which means: (i) president, secretary, treasurer, or vice-president of the corporation in charge of a principal business function, or any other person who performs similar policy or decision making functions, or (ii) the manager of one or more manufacturing, production, or operating facilities employing more than 250 persons or having gross annual sales or expenditures exceeding $25 million (in second-quarter 1980 dollars), if authority to sign documents has been assigned or delegated to the manager in accordance with corporate procedures;

For a partnership or sole proprietorship: by a general partner or the proprietor; or

For a municipality, State, Federal, or other public facility: by either a principal executive officer or ranking elected official.

Paperwork Reduction Act Notice

Public reporting burden for this application is estimated to average 0.5 hours per application, including time for reviewing instructions, searching existing data sources, gathering and maintaining the data needed, and completing and reviewing the collection of information. Send comments regarding the burden estimate, any other aspect of the collection of information, or suggestions for improving this form, including any suggestions which may increase or reduce this burden to: Chief, Information Policy Branch, 2136, U.S. Environmental Protection Agency, 401M Street, SW, Washington, DC 20460, or Director, Office of Information and Regulatory Affairs, Office of Management and Budget, Washington, DC 20503.

SECTION TABLE OF CONTENTS

DIVISION 01 - GENERAL REQUIREMENTS

SECTION 01670

RECYCLED / RECOVERED MATERIALS

12/01

PART 1 GENERAL

1.1 REFERENCES
1.2 OBJECTIVES
1.3 EPA DESIGNATED ITEMS INCORPORATED IN THE WORK
1.4 EPA PROPOSED ITEMS INCORPORATED IN THE WORK
1.5 EPA LISTED ITEMS USED IN CONDUCT OF THE WORK BUT NOT INCORPORATED IN THE WORK

-- End of Section Table of Contents --

SECTION 01670

RECYCLED / RECOVERED MATERIALS

12/01

PART 1 GENERAL

1.1 REFERENCES

The publications listed below form a part of this specification to the extent referenced. The publications are referred to in the text by basic designation only.

U.S. NATIONAL ARCHIVES AND RECORDS ADMINISTRATION (NARA)

40 CFR 247	Comprehensive Procurement Guideline for Products Containing Recovered Materials

1.2 OBJECTIVES

Government procurement policy is to acquire, in a cost effective manner, items containing the highest percentage of recycled and recovered materials practicable consistent with maintaining a satisfactory level of competition without adversely affecting performance requirements or exposing suppliers' employees to undue hazards from the recovered materials. The Environmental Protection Agency (EPA) has designated certain items which must contain a specified percent range of recovered or recycled materials. EPA designated products specified in this contract comply with the stated policy and with the EPA guidelines. The Contractor shall make all reasonable efforts to use recycled and recovered materials in providing the EPA designated products and in otherwise utilizing recycled and recovered materials in the execution of the work.

1.3 EPA DESIGNATED ITEMS INCORPORATED IN THE WORK

Various sections of the specifications contain requirements for materials that have been designated by EPA as being products which are or can be made with recovered or recycled materials. These items, when incorporated into the work under this contract, shall contain at least the specified percentage of recycled or recovered materials unless adequate justification (non-availability) for non-use is provided. When a designated item is specified as an option to a non-designated item, the designated item requirements apply only if the designated item is used in the work.

1.4 EPA PROPOSED ITEMS INCORPORATED IN THE WORK

Products other than those designated by EPA are still being researched and are being considered for future Comprehensive Procurement Guideline (CPG) designation. It is recommended that these items, when incorporated in the work under this contract, contain the highest practicable percentage of recycled or recovered materials, provided specified requirements are also met.

1.5 EPA LISTED ITEMS USED IN CONDUCT OF THE WORK BUT NOT INCORPORATED IN

THE WORK

There are many products listed in 40 CFR 247 which have been designated or proposed by EPA to include recycled or recovered materials that may be used by the Contractor in performing the work but will not be incorporated into the work. These products include office products, temporary traffic control products, and pallets. It is recommended that these non-construction products, when used in the conduct of the work, contain the highest practicable percentage of recycled or recovered materials and that these products be recycled when no longer needed.

-- End of Section --

This page was intentionally left blank for duplex printing.

ATTACHMENT NO. 1

FINAL FOUNDATION ANALYSIS AND SOIL BORINGS

ATTACHMENT NO. 1

FINAL FOUNDATION ANALYSIS

FOR
CONSOLIDATED SPACE GROUP
OPERATIONS FACILITY

SCHRIEVER AFB, COLORADO

FINAL FOUNDATION ANALYSIS

CONSOLIDATED SPACE GROUP OPERATIONS FACILITY
SCHRIEVER AIR FORCE BASE, COLORADO

1. Scope

The results of the foundation investigation and analysis for the Consolidated Space Group Operations Facility at Schriever Air Force Base, Colorado are presented in this report. The scope of the study was to (1) evaluate the engineering properties of the subsoils; (2) provide allowable soil bearing pressures and (3) recommend types and depths of foundation elements and other measures pertinent to foundation design and construction.

2. Proposed Construction

This project involves the construction of an approximately 2525 square meter (27,183 square foot) facility to house offices in support of on-going Space Group activities. The building will consist of two, two-story wings, oriented roughly N-S and E-W. Although not confirmed, a deep crawl space may be included under the building. Paved sidewalks are included, however no vehicle parking spaces will be built.

3. Subsurface Investigations

3.1. General

An Omaha District drill crew conducted the subsurface investigation from 27 February to 5 March 2003. The subsurface work consisted of six borings numbered sequentially from FS03-1 to FS03-6, and were advanced to depths of 6.1 meters (20 feet) and 9.15 meters (30 feet) within or near the building footprint. A Gus Pech 1100C drill rig using 12-cm (4 3/8-inch) inside-diameter (I.D.) hollow-stem augers and a 10.8-cm (4 1/4-inch) bullet bit was used. Boring locations were determined in the field by measuring from existing features; boring PF03-4 was relocated approximately 4.5 meter (15 feet) from the original location to avoid a tree. Holes were abandoned by filling with a high solids (30%) bentonite grout. After settlement of the grout the holes were topped soil cuttings.

TABLE 1: Summary of Borings

Boring Number	Date Drilled	Total Depth M (ft)	Water During Drilling M (ft)	Collapse Depth M (ft)
FS03-1	3-Mar-2003	6.1 (20)	Not Encountered	4.24 (13.9)
FS03-2	3-Mar-2003	9.15 (30)	Not Encountered	5.46 (17.9)
FS03-3	3-Mar-2003	6.1 (20)	Not Encountered	3.81 (12.5)
FS03-4	3-Mar-2003	6.1 (20)	Not Encountered	3.75 (12.3)
FS03-5	4-Mar-2003	9.15 (30)	Not Encountered	5.33 (17.5)
FS03-6	4-Mar-2003	6.1 (20)	Not Encountered	4.00 (13.1)

Collapse depth was measured following removal of the augers.

3.2. Standard Penetration Tests

Standard penetration tests were taken in all borings at depth intervals of 76 cm (2.5 feet) for the first 3.05 meters (10 feet) and every 1.52 meters (5 feet) for the remaining depth of the boring. The standard penetration samples were obtained in accordance with ASTM D 1586-99 "Penetration Test and Split-Barrel Sampling of Soils", using a 63.5 kg (140-pound) automatic trip hammer.

3.3. Disturbed Sampling

Representative disturbed samples of the subsoils were taken with a 50.8-mm (2-inch) outside diameter (O.D.) standard steel split spoon sampler using a 63.5 kg (140-pound) automatic SPT hammer, in accordance with ASTM D 1586-99. Samples were collected every 76 cm (2.5 feet) for the first 3.05 meters (10 feet), then every 1.52 meters (5 feet) for the remaining depth of the hole. Samples were placed in a pint jar and the lid sealed airtight with at least three wraps of electrical tape. Each jar was labeled, denoting the hole and sample number, depth, date collected, and the project name. The jars were placed in wooden boxes that were subsequently labeled with the appropriate project information.

3.4. Undisturbed Sampling

Undisturbed samples were taken using 76.2-mm (3-inch) O.D. Shelby tubes. The Shelby tubes were hydraulically pushed a distance of 61 cm (2 feet); the pressure exerted in pounds per square inch and duration in seconds of the 61-cm (2-foot) push were recorded on the field log. Undisturbed samples were taken at depths of 3.05-3.66 meters (10-12 feet) in boring FS03-2 and from 3.05-5.66 and 6.10-6.71 meters (20-22 feet) in boring FS03-5. Undisturbed Shelby tube samples were secured with packers and endcaps; endcaps were secured with at least five wraps of electrical tape. Shelby tubes were wiped clean and labeled on the outside with project, hole and depth information; in addition, a sample tag was completed and placed inside the tube prior to securing the endcaps. The tubes were placed inside foam-padded wooden boxes for shipment.

4. Laboratory Testing

Samples with transmittal sheets were shipped to the Omaha District Quality Assurance Facility for preparation, and were tested at the Terracon Inc. laboratory in Omaha, Nebraska. Tests were performed to determine visual classification, Atterberg Limits, grain size distribution, natural moisture content, sulfate ion content, soil pH, and soil resistivity. All tests were conducted in accordance with EM 1110-2-1906 "Laboratory Soils Testing".

Based upon the results of the testing program, the field logs were revised and supplemented as shown on the boring logs. These final logs represent an interpretation and compilation of the content of the field logs and the results of the laboratory tests of the field samples. The stratification lines shown on the boring logs represent the approximate boundaries between soil types and may be gradual. Boring logs and a boring location plan are included in the project drawings and are archived at the Geotechnical Branch, Soils Section A, of the Omaha District.

5. Site Conditions

5.1. General Geology

Schriever Air Force Base is located in the Colorado Piedmont Section of the Great Plains Physiographic Province. This section consists of a late mature to old elevated alluvial plain. An original mantle of Pleistocene sand and gravel has been progressively removed by stream erosion leaving an area of mesas topped by sand and gravel and bordered by stream valleys. Overburden consists generally of sand, gravel, silt and clay of alluvial origin. Bedrock is commonly the Laramie or Fox Hills Formation(s) of Cretaceous age. Due to the relatively shallow depths of borings for most structures, it is not known what the exact depth of overburden is. During an investigation for a structure near the center of the fenced compound, borings advanced to a depth of 12 meters (40 feet) did not encounter bedrock.

5.2. Site-Specific Geology

The site occupies an open field west of the Satellite Control Facility and has a moderate grass cover and a few trees. A drainage swale trending north-south is located on the site. Soils encountered consist mainly of sandy clay to a depth of approximately 2.5 meters (8 feet). Underlying that is predominantly silty sand (SM) to the bottom of the explored depth.

5.3. Ground Water

Ground water was not encountered during drilling and is not normally encountered within twenty feet of the surface at the installation. The exception to this is small areas of perched water within clay-rich zones. The soils encountered at the boring locations do not present good water-bearing media. They are capable of holding and transmitting capillary water and vapor, however. Although all of the borings collapsed after the augurs were pulled, this is believed to be the result of the granular nature of the soils rather than due to the presence of water. Collapse depths were inconsistent and the moisture content of the soils did not increase with depth.

5.4. Seismic Evaluation

In reference to the U.S. Army Corps of Engineers Technical Instructions "Seismic Design for Buildings" TI 809-04, dated 31 December 1998, and the Federal Emergency Management Agency (FEMA) publication "NEHRP Recommended Provisions for Seismic Regulations for New Buildings and Other Structures, 1997 Edition", Schriever AFB has a 0.2 second Spectral Response Acceleration (S_s) of 0.17g and a one second spectral response acceleration (S_1) of 0.05g. These accelerations were interpolated from 1:5,000,000 scale maps prepared by the U.S. Geologic Survey (USGS), Building Seismic Safety Council (BSSC), and FEMA for 0.2 Sec. Spectral Response Acceleration (5% of Critical Damping), Site Class B, and 1.0 Sec. Spectral Response Acceleration (5% Critical Damping), Site Class B, respectively. The spectral response accelerations taken from these maps must be adjusted for site class effects using coefficients provided in the aforementioned guidance. For design purposes, the reference site condition is taken as National Earthquake Hazards Reduction Program (NEHRP) site class D.

The adjusted maximum considered earthquake spectral response acceleration parameters are:

The Short-Period Spectral Acceleration ($S_{MS} = F_a S_S$) for site class D is (1.6 x 0.145)= 0.272.

The 1 Second Period Spectral Acceleration ($S_{M1} = F_v S_1$) for site class D is (2.4 x 0.040)= 0.12.

6. Subsurface Recommendations

6.1. General

Soils at the project site consist primarily of sandy clay (CL) and clayey sand (SC) underlain by silty sand (SM). These materials are suitable for use as building and pavement subgrades and for backfilling adjacent to structures. High plasticity clay was not encountered at this site and is not anticipated to be present. Prior to adding fill to the site, topsoil should be stripped and the subgrade soils scarified and recompacted. A slope of at least 1 percent and preferably 5 percent should be maintained within 3.05 meters (10 feet) of structures to ensure adequate drainage.

6.2. Foundation Recommendations

6.2.1. Shallow Spread and Continuous Footings

The recommended foundation type for this design is shallow spread and continuous footings bearing on recompacted native material if footings are located at a depth less than 3 meters (10 feet), or on undisturbed native material if footings are located at a depth of 3 meters (10 feet) or greater.

Footings bearing at less than 3 meters (10 feet) depth will be located in predominantly sandy clay (CL) possessing a Standard Penetration Test resistance of between 5 and 12 blows per unit of penetration. Because of the

variation in resistance, 915 mm (3 feet) of existing material must be removed, moisture conditioned, and replaced in maximum 200mm (8-inch) lifts at 95 percent of maximum Modified Proctor density in order to create a more uniform bearing surface. Footings bearing on this layer of recompacted soil may be designed for an excess bearing pressure of 95 kPa (2000 psf).

Footings bearing at greater than 3 meters (10 feet) depth will be located in predominantly silty sand (SM) possessing a Standard Penetration Test resistance of greater than 20 blows per unit of penetration. Footings bearing on an undisturbed surface of this material may be designed for an allowable excess bearing capacity of 120 kPa (2500 psf). These values represent the maximum allowable bearing pressure at the base of the footings in excess of that due to existing surrounding overburden.

All exterior footings for heated structures should be founded a minimum of 1 meter (3.3 feet) below final exterior grade to provide adequate frost protection.

All footings for unheated structures should be founded a minimum of 1 meter (3.3 feet) below final exterior grade to provide adequate frost protection.

6.2. Slabs on Grade

A vapor barrier overlying a 150-mm (6-inch) capillary water barrier will be required beneath all floor slabs on grade. The barrier should consist of either a minimum 1.27-mm (50-mil) membrane or combination of a 0.51-mm (20-mil) membrane with an overlying 300 g/m^3 (8-oz per square yard) non-woven geotextile. If grade-supported floor slabs are placed at shallow depth (i.e. the crawl space is not included in the project), they should bear on a layer of recompacted native soil 600 mm (2 feet) in thickness. The material must be moisture-conditioned and compacted to 95 percent of maximum Modified Proctor density. This thickness may include the capillary water barrier layer (i.e. the total thickness of replaced material plus the capillary barrier should equal 600 mm (2 feet)). Slabs bearing on a layer of recompacted native material at shallow depth may be designed using a modulus of subgrade reaction "K" of 4.86 kgf/cm^3. Slabs bearing on undisturbed native soil at a depth greater than 3 meters (10 feet) may be designed using a “K” value of 5.56 kgf/cm^3 (200 pci). If a sand layer is used between the capillary barrier and the slab, only enough sand to fill the surface voids in the barrier aggregate should be used as having loose sand immediately below the slab may result in a loss of support.

It is not recommended that the crawl space be constructed with a base slab omitted due to moisture and radon mitigation concerns. If the slab must be constructed later, the surface on which it bears must be either preserved or reconstructed prior to slab placement.

6.3. Pavement Design

Soils underlying pavement are predominantly clayey sands (CL). These soils have a frost design classification of F3 due to their fines content of greater than 15 percent.

If rigid pavement design does not consider frost penetration, a modulus of subgrade reaction "K" of 4.17 kgf/cm^3 (150 pci) is recommended for design purposes. Flexible pavement designs should use a California Bearing Ratio (CBR) value of 8 for subgrades compacted to 95 percent of maximum density per ASTM D 1557-78 when frost is not allowed to penetrate the subgrade. If frost penetration is considered in the design of rigid or flexible pavements, the design shall be in accordance with TM 5-818-2 "Pavement Design for Seasonal Frost Conditions".

6.4. Settlement

Based on Standard Penetration Test blow counts and experience with area soils, total settlement should not exceed 2.54 cm (1.0 inch) under the recommended loading conditions. Differential settlement should not exceed 1.27 cm (0.50 inch) under such conditions.

6.5. Cementing Properties

Sulfate ion content test results were not available at the time of issuance of the intermediate soils report. Results from tests conducted on representative site samples indicated a sulfate ion content between 0.2 percent and 2.0 percent, which is atypical of conditions normally encountered at Schriever AFB.

Based on criteria outlined in ACI 201.2, a “severe” exposure condition exists; therefore sulfate-resistant cement will be required for concrete in contact with soil or groundwater and within 24 inches above final grade. Portland cement will be ASTM C 150:

A. Type V, or

B. Type II having a tricalcium aluminate content of less than 5 percent, or meeting the optional physical requirement for sulfate expansion for Type V cement on Table 4, ASTM C 150, or

C. Type II blended with a pozzolan meeting the requirements of ASTM C 618, Type F.

In addition, sulfate-resistant concrete will have a water-cement ratio of less than 0.45. Calcium chloride or admixtures containing the chloride ion will not be permitted in sulfate-resistant concrete. The curing time for sulfate-resistant concrete will be 12 days. Concrete pavement will not require sulfate-resistant cement if it is isolated from the subgrade by a base course.

Due to the potential for alkali-aggregate reactivity within the boundaries of the Omaha District, cement meeting the optional chemical requirements for low alkali cement on Table 2, ASTM C 150 will also be specified for all concrete. The Resource Conservation Recovery Act (RCRA) mandates, where possible, all concrete specifications will also include the option to use pozzolan as a partial replacement for Portland cement.

6.6. Corrosion Potential

Soil resistivity tests were performed on representative samples. Test results indicated a resistivity of between 640 and 1100 ohm-cm. In accordance with corrosion classifications in the Department of the Army TM 5-811-4 (17 March 1965), "Electrical Design, Corrosion Control", a "severe" corrosion potential is expected. Soil pH measured 7.7 and 7.8.

6.7. Lateral Earth Pressure

The following values may be used for calculating lateral earth pressures against structures.

0-3 meters (0-10 feet) depth: K(active) = 0.50; K(passive) = 2.0; K(at-rest) = 0.66; moist density = 1922 kg/m^3 (120 lb/ft^3)
Greater than 3 meters (10 feet) depth: K(active) = 0.31; K(passive) = 3.3; K(at-rest) = 0.47; moist density = 1842 kg/m^3 (115 lb/ft^3)

6.8. Foundation Drainage

A foundation drain is recommended to prevent hydrostatic pressure against buried walls and the base slab if the crawl space is included in the project. If the crawl space is not included a foundation drain is not necessary.

7. Construction Considerations

Care must be taken to avoid disturbing the exposed surfaces on which deep foundation members will bear. Excavation to final grade should be made immediately prior to placement of forms and concrete. Disturbed surfaces or those softened by exposure to the weather should be scarified, moisture conditioned and recompacted prior to footing placement.

Site conditions markedly different to those described in this report should be brought to the attention of Soils A Section of the Geotechnical Branch immediately to determine if amendments to the design recommendations are warranted.

CENWO-ED-GA 14 May 2003

MEMORANDUM FOR CENWO-PM-M (Armstrong)

SUBJECT: Final Foundation Analysis for the Consolidated Space Group Operations Facility at Schriever Air Force Base, Colorado

1. Enclosed is the Final Foundation Analysis for the design of the Consolidated Space Group Operations Facility project at Schriever AFB, Colorado.

2. Questions regarding this report may be directed to Gordon Lewis, CENWO-ED-GA, (402) 221-4306.

Encl
as

JOHN W. MONZINGO, P.E.
Chief, Geotechnical Engineering
and Sciences Branch

Lewis/ggl/4306

Wagner/CENWO-ED-GG

Skeen/CENWO-ED-GG

Ray/CENWO-ED-GA

Monzingo/CENWO-ED-G

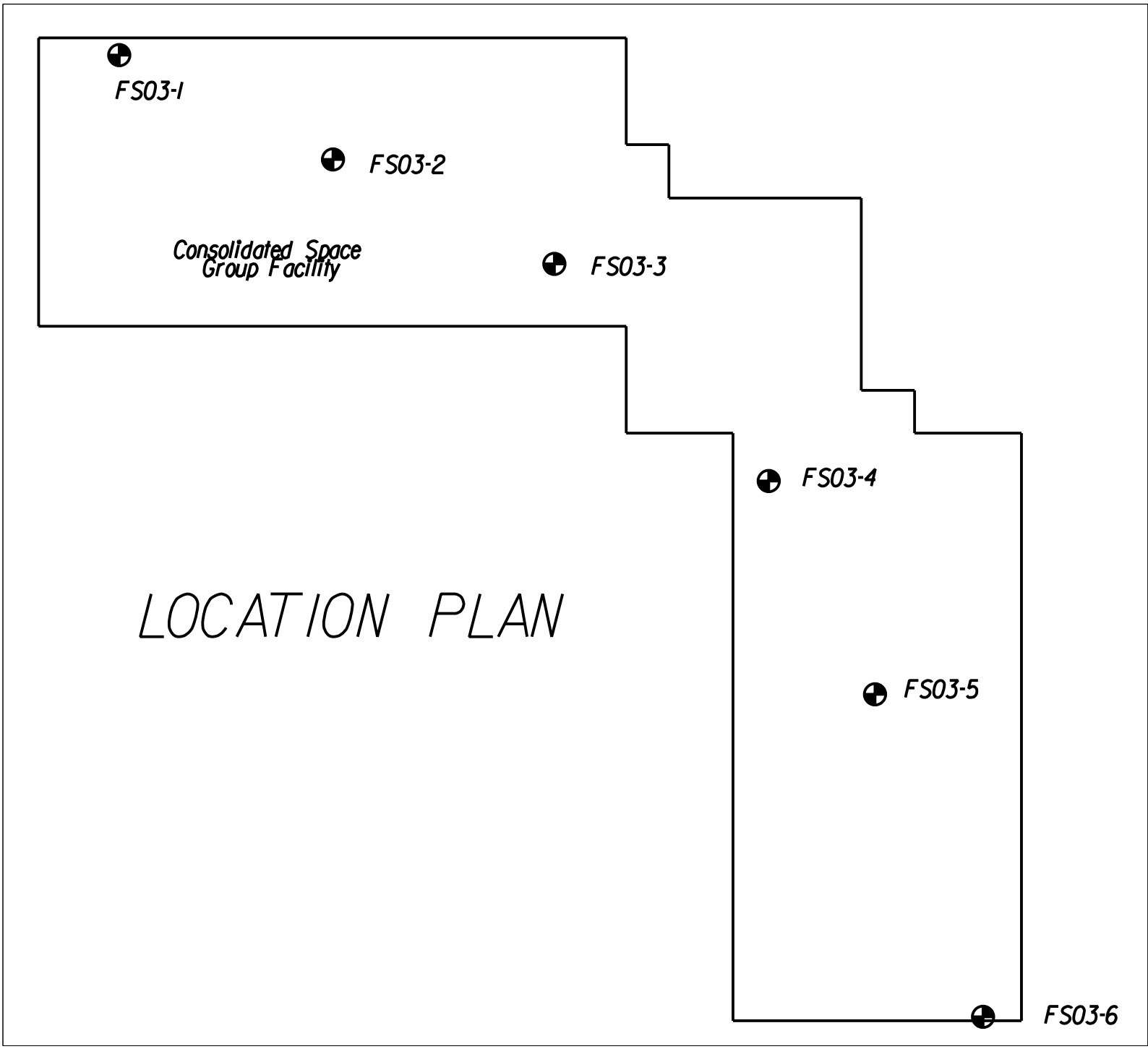

...\Schriever Space\fs10.dgn 05/14/2003 01:29:27 PM

BORING LEGEND

FS03-1	Drill hole number
March 3, 2003	Date boring completed
M	Natural moisture content in percent
LL	Liquid limit
PI	Plasticity index
N	Standard penetration blow count. Number of blows for a 140 pound weight dropping 30 inches, to drive a 2 inch outside diameter sampler, 1 foot.
SO_4	Sulfate ion content in soil, mg/L
% fines	Percent of soil by dry weight passing the No.200 sieve
FS03-1 ⊕	Drill hole number and location

...\Schriever Space\fs10.dgn 05/14/2003 01:21:05 PM

FS03-1
March 3, 2003

Depth In Feet	N	M	LL	PI		
0'	23	9.3	30	14	CL	SANDY LEAN CLAY, dk.brown, very stiff, fine sand, 69% fines, damp
	8	11.4	39	21	CL	LEAN CLAY, brown, med.stiff to stiff, some fine sand, damp pH=7.7, SO_4=266, Resisitivity=1100 Ohm-Cm
5'	8	11.5	36	18	CL	LEAN CLAY WITH SAND, brown, med.stiff to stiff, fine sand, 79% fines, damp
	25	3.7	21	5	SC-SM	SILTY CLAYEY SAND, yellowish brown, med.dense, fine to med.sand, 1% gravel, 17% fines, dry
10'	31	10.3	27	12	SC	CLAYEY SAND, yellowish brown, dense, fine to med.sand, 35% fines, dry
15'	32	3.1			SW-SM	SAND WITH SILT, lt.brown, dense, fine to coarse sand, 5% gravel, 7% fines, dry, nonplastic
20'						
25'						
30'						

No ground water table encountered

...\Schriever Space\fs10.dgn 05/14/2003 10:44:17 AM

FS03-2
March 3, 2003

Depth In Feet	N	M	LL	PI		
0'						
	9	11.8	28	10	CL	LEAN CLAY WITH SAND, dk.brown, stiff, fine sand, 71% fines
5'	9	14.5	42	25	CL	LEAN CLAY, yellowish brown, stiff, some fine sand, 86% fines
	5	14.4			CL	LEAN CLAY WITH SAND, brown, med.stiff, fine sand
10'	17	7.5			SC-SM	SILTY CLAYEY SAND, yellowish brown, med.dense, fine to med.sand, trace gravel, dry
		4.7			SM	SILTY SAND, grayish brown, fine to coarse sand, 3% gravel, 15% fines, dry to sl.moist, nonplastic, highly calcareous
15'	23	1.8				
20'	42	4.0			SW-SM	SAND WITH SILT, lt.brown, med.dense to dense, fine to coarse sand, some gravel, dry, nonplastic
25'	59	3.7			SM	SILTY SAND, lt.grayish brown, very dense to dense, fine to coarse sand, 3% gravel, 13% fines, dry, nonplastic
30'	36	2.9				

No ground water table encountered

FS03-3
March 3, 2003

Depth In Feet	N	M	LL	PI		
0'	31	9.1	29	12	CL	LEAN CLAY WITH SAND, dk.brown, hard, fine sand, 76% fines
5'	15	11.3			CL	LEAN CLAY WITH SAND, med.dk.brown, stiff to very stiff, fine sand, damp
	9	15.0			CL	LEAN CLAY, brown, stiff, some fine sand, damp
10'	10	10.2	29	12	SC	CLAYEY SAND, dk.yellowish brown, loose to med.dense, fine to med.sand, 36% fines, damp
15'	28	5.4			SM	SILTY SAND, lt.grayish brown, med.dense, fine to coarse sand, trace gravel, damp, nonplastic
20'	22	4.0			SW-SM	SAND WITH SILT, lt.brown, med.dense, fine to coarse sand, some gravel, damp, nonplastic
25'						
30'						

No ground water table encountered

...\Schriever Space\fs10.dgn 05/14/2003 10:48:15 AM

FS03-4
March 3, 2003

Depth In Feet	N	M	LL	PI		
0'	23	10.9			CL	LEAN CLAY WITH SAND, dk.brown, very stiff, fine sand, damp
5'	7	11.0			CL	LEAN CLAY, brown, med.stiff, some fine sand, dry
	10	10.7			CL	LEAN CLAY WITH SAND, brown, stiff, fine sand, dry
10'	14	6.5			SM	SILTY SAND, lt.brown, med.dense, fine to coarse sand, 1% gravel, 17% fines, damp, nonplastic
15'	21	3.2			SM	SILTY SAND, lt.grayish brown, med.dense to dense, fine to coarse sand, trace gravel, damp, nonplastic
20'	34	4.7				
25'						
30'						

No ground water table encountered

...\Schriever Space\fs10.dgn 05/14/2003 10:49:28 AM

FS03-5
March 4, 2003

Depth In Feet	N	M	LL	PI		
0'	34	7.6	32	16	SC	CLAYEY SAND, grayish brown, hard to stiff, fine to med. sand, trace gravel, 46% fines
5'	13	11.5				SANDY LEAN CLAY, brown, stiff, fine to med. sand, 1% gravel, 52% fines, possible cobbles
	13	9.4	32	17	CL	pH=7.8, SO4=3003, Resistivity=640 Ohm-Cm
10'	15	8.3	32	16	SC	CLAYEY SAND, lt. grayish brown, med. dense, fine to med. sand, 1% gravel, 40% fines, dry
		3.0			SW-SM	SAND WITH SILT, grayish brown, fine to coarse sand, 7% gravel, 6% fines, sl. moist, nonplastic
15'	28	2.7			SM	SILTY SAND, lt. grayish brown, med. dense to dense, fine to coarse sand, trace gravel, dry, nonplastic
20'	33	4.2				
		4.6			SM	SILTY SAND, grayish brown, fine to coarse sand, trace gravel, dry, nonplastic, noncalcareous
25'	38	4.6			SM	SILTY SAND, lt. grayish brown, dense, fine to coarse sand, trace gravel, dry, nonplastic
30'	22	7.2			SM	SILTY SAND, lt. grayish brown, med. dense, fine to coarse sand, 3% gravel, 13% fines, dry, nonplastic

No ground water table encountered

...\Schriever Space\fs10.dgn 05/14/2003 12:23:30 PM

FS03-6
March 4, 2003

Depth In Feet	N	M	LL	PI		
0'	33	10.7			SC	CLAYEY SAND, grayish brown, dense, fine to med. sand, trace gravel
5'	17	12.4			CL	SANDY LEAN CLAY, dk. brown, very stiff, fine to med. sand, trace gravel
	23	5.5				
10'	9	5.9			SM	SILTY SAND, lt. brown, med. dense to loose, fine to coarse sand, trace gravel, damp, nonplastic
15'	18	4.4			SM	SILTY SAND, lt. grayish brown, med. dense to dense, fine to coarse sand, trace gravel, dry, nonplastic
20'	35	5.4				
25'						
30'						

No ground water table encountered

ATTACHMENT NO. 2

LANDSCAPE AND WATER CONSERVATION DESIGN GUIDELINES

Landscape & Water Conservation Design Guidelines

Design ◆ Landscape Concept ◆ Climate ◆ Reduced Turf Areas ◆ Use of Low Water Demand Plants ◆ Irrigation Concept ◆ Potential Alternative Water Sources ◆ Zoned Irrigation ◆ Mulches ◆ Soil Improvements ◆ Maintenance

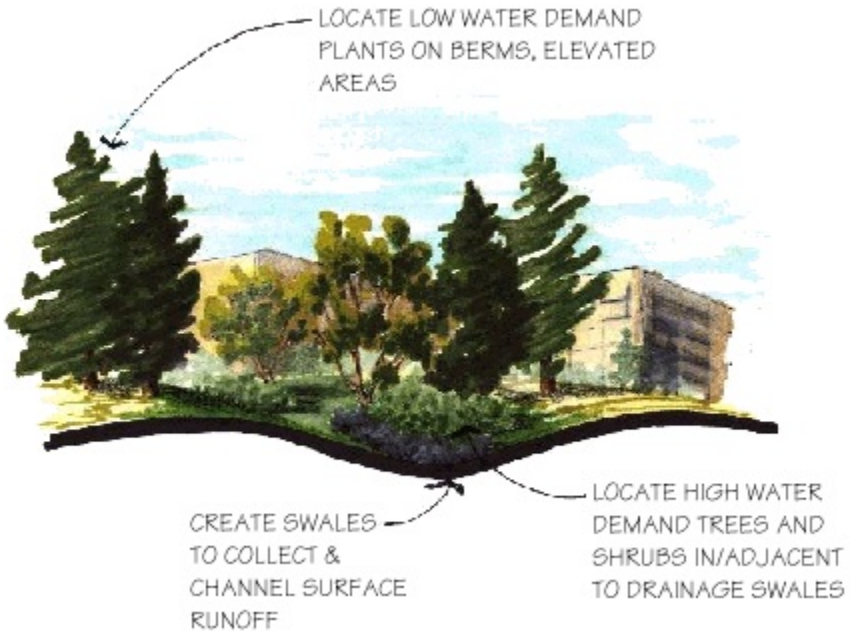

DESIGN

This is perhaps the most important step to the development of a water conserving landscape. Professional landscape design services will integrate the constraints of water conservation with the need for an attractive, safe, functional and aesthetic design. The landscape architect will take into consideration function, circulation, topography, exposure, seasonal color, texture, and maintenance. It is critical at this stage to incorporate water conservation techniques and principles.

LANDSCAPE CONCEPT

The strong visual contrast that exists between the arid Colorado prairie and the "oasis" image of the base can be viewed as an asset rather than a liability. The goals and objectives identify the need to maintain the high visual image and quality of the base, while implementing water conservation measures. This has been accomplished by dividing the land uses found on the base into specific landscape zones. The landscape zones range in intensity (of development) based on the user needs and development programs. For example, landscape development would be most intensive in areas with the highest pedestrian usage and visual impact. Conversely, landscape development would be the least intensive in areas of little to no pedestrian usage.

Therefore, the following landscape zone categories have been created to reflect the intensity of land use at Schriever AFB:

A. **Intensive Landscape Zone** : The intensive landscape zone includes major pedestrian corridors, entry zones such as building entrances, main gate or security entrances, outdoor seating areas, and main view corridors. These areas have been selected based upon their pedestrian use, where the use warrants a greater intensity landscape development. Typically, 30" of water is required in addition to the natural precipitation of 15" per growing season. This translates into approximately 18-20 gallons of water per square foot of landscaped area. Typical plants occurring in this zone would include aspen, birch, cottonwood, fir, non-native maple, spruce, willow, winged euonymous, holly, hydrangea, quince, cranberry viburnum, yew, cardinal flower, fern, foxglove, hosta, meadow rue, primrose, sweet wodruff, and kentucky bluegrass.

B. **Moderate Landscape Zone** : The moderate landscape zone is comprised of landscapes where limited amounts of irrigation is required. These zones are characterized by moderate areas of irrigated turf grasses, with areas of ornamental plantings, street trees, and vegetation screens. The moderate landscape zone consists of parking lots, vehicular access corridors, service and maintenance areas and building side or rear yards. These areas are either viewed primarily from a vehicle or from a specific location within the intensive landscape zone. The areas of pedestrian usage within a parking lot would be more intensively developed. Typically, 16" of water is required in addition to natural precipitation of 15" per year. This translates into approximately 10 plus gallons of water per square foot per growing season. Typical plants occurring in this zone would include established fescue sod, western catalpa, crabapple, European mountain ash, hawthorne (other than Russian), goldenrain tree, honeylocust, linden, English/red/white oak, redbud, spreading cotoneaster, currant, honeysuckle, lilacs, potentilla, spirea, ajuga, bleeding heart, candytuft, hardy chrysanthemum, columbine, orange coneflower, daylily, iris, lupine, peony, periwinkle, shasta daisy.

C. **Low Landscape Zone** : The low landscape zone is comprised of landscapes where the least amount of irrigation is required. This zone is characterized by native seeded areas, which require only supplemental irrigation. Low Landscape Zones are seen as future development areas, with screening or buffers from adjacent higher intensity use areas, for example around service areas, and at backs of buildings that are not viewed. Typically, 5" of water is required in addition to natural precipitation of 15" per year. This translates into approximately 3 gallons of water added per square foot per growing season. Typical plants occurring in this zone would include crested wheat grass, green ash, Kentucky coffeetree, hackberry, Russian Hawthorne, Rocky Mountain juniper, ginnala/bigtooth/Rocky Mountain maple, Burr/gambel oak, ponderosa pine, Austrian pine, junipers, Siberian peashrub, American plum, shrub rose, western sandcherry, service berry, three-leaf sumac, Basket-of-gold, bishop's goutweed, coreopsis, gaillardia, knotweed, lamb's ear, mountain bluet, perennial flax, purple coneflower, rock-cress, snow-in-summer, yarrow.

D. **Reclamation Zone** : The reclamation zone and/or open space areas, encompass large tracts of land that have been disturbed or eroded and require reclamation before being incorporated into the overall landscape picture. These areas could occur either within or outside the restrictive zone.

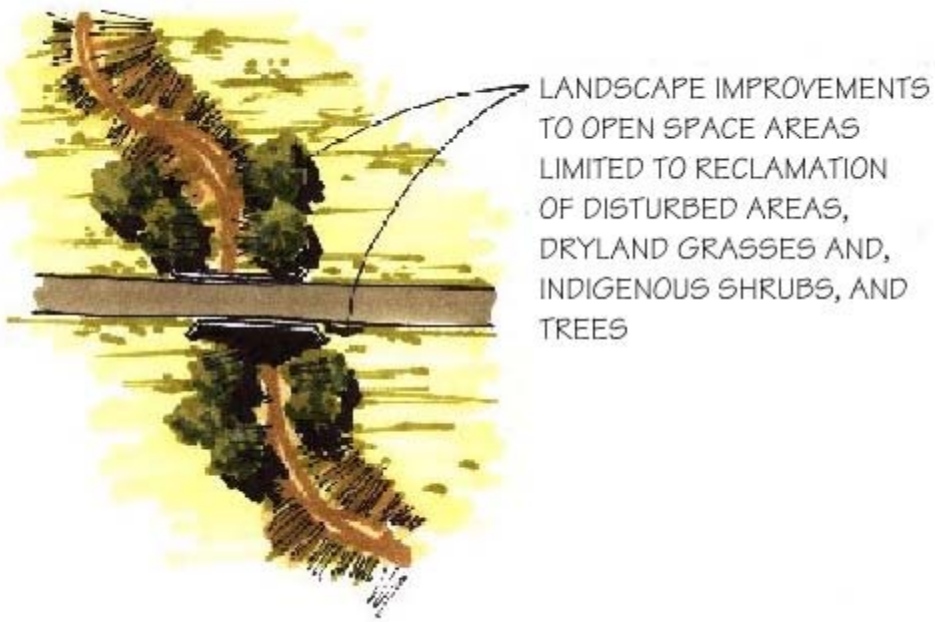

CLIMATE

Schriever AFB is located at approximately 6200 feet above sea level. The average annual rainfall is 15.5"; approximately 13.2" occurs during the typical growing season, which averages 148 days between April and September. The average seasonal snowfall is 42.2". Not all precipitation which falls makes its way to the plant roots and is effective for plant growth. Some precipitation will run off, and evaporate off the plant leaves and the soil surface. Typically, it is assumed that 50 % of the precipitation is effective. Therefore, only 6.6" of the precipitation that falls is usable by plant material.

Winds in this area have a distinct diurnal variation in direction throughout the year. Thus the wind changes direction from night to day and season to season. Winds generally prevail from the north. The wind has an average velocity of 10 MPH. April tends to have the strongest winds.

The climate is classified as SEMI ARID with low humidity, drying seasonal winds, intense sun, and high summer temperatures. The combinations of these climatic elements make it extremely difficult for plant material that is not indigenous to the region to become established, grow and mature.

REDUCED TURF AREAS

High water turf areas require the highest water use. In the design phase, the high water use turf areas need to be evaluated for their necessity in the landscape. These areas should only occur in the Intensive Landscape Zone. High water use turf should be irrigated separately from trees, shrubs, and perennials so that water conservation measures can be incorporated.

USE OF LOW WATER DEMAND PLANTS

Due to the climatic and environmental influences of the region, only indigenous and adapted plant species should be utilized in the landscape. Consideration should be given to the plants adaptability to the new landscape environment, where it has been grown, spacing, soils, and orientation, providing it with the optimum growing conditions.

IRRIGATION CONCEPT

Water is a renewable, yet finite resource. The days of watering without regard to the amount of water applied are past. The average cost of delivering water for irrigation from 1995 to 1998 averaged $103,000 per year. To promote water conservation, close attention must be paid to matching the irrigation system to the landscape zones, while matching the amount of water applied to the amount of water needed by the plant material. This can be accomplished by zoning plants with similar irrigation requirements in areas that can be effectively covered by the proper irrigation system.

POTENTIAL ALTERNATIVE WATER SOURCES

Several potential alternative water sources were investigated to determine the potential for use as a source for landscape irrigation.

- A. **Effluent Water**
  Information regarding the volume of effluent available and quality of effluent was not received from Schriever AFB. It is not known whether the existing waste water treatment plant could provide water to meet both the peak season and annual water requirements of the irrigated area. At peak season, the existing irrigated area requires approximately 288,000 gallons daily. Annually, the system requires approximately 51.25 million gallons.

  It is not know if the effluent water will meet water quality standards for use with turf irrigation.

  There is no existing infrastructure which could take the effluent water and deliver it to the existing irrigation systems.

  B. **Rainfall Runoff from Roofs**
  Based on the historical precipitation data, 13.2 inches of rainfall occurs during the growing season. The effective roof area is less than the irrigated area, and multiple cisterns and pumps would be required to store and deliver the water to the irrigation system.

  Since there would be limited benefit and it would be very costly to deliver the water to the irrigation system, general use of rainfall runoff does not appear to be practical.

  Localized use of runoff by channeling and grading areas near downspouts to direct the water throughout a shrub bed would provide for beneficial use of roof runoff.

  C. **Well Water**
  Information regarding potential volume of water available and adjudication information for wells on Air Force property was not received from Schriever AFB.

  The overall base site plan shows six stock tanks within the base boundary. It is assumed that each stock tank has a well associated with it. Available flows are not known. The distance from the wells to the beltway ranges from 3,200 to 9,300 feet. Due to the distance, it may not be practical to bring water from the wells to the base. It may be possible to relocate existing wells so the water source is closer to the irrigation systems on base.

  There is no existing infrastructure which could take the well water and deliver it to the existing irrigation systems.

It may not possible to use well water if the adjudication is for something other than irrigation. Any change in use must be approved by the Colorado State Engineers Office. If a well is adjudicated for cattle watering, for example. It is unlikely that the approval would be given to use that water for irrigation due to the possibility of increasing the amount of water used.

ZONED IRRIGATION

The irrigation system needs to be designed by a professional irrigation designer so that each type of landscaped area receives the correct type of irrigation system. Turf areas are spray irrigated; perennials, shrubs, ornamental grasses and trees are drip irrigated. The irrigation system can then be regulated so the water is applied according to seasonal requirements. The evapotranspiration rate can be monitored and the irrigation system adjusted for the seasonal variations. This allows only as much water into the landscape as is need for the plants to grow.

Whenever possible, areas of differing exposure to the sun are to be irrigated by different irrigation laterals. In this way, south facing turf or planting beds can be irrigated longer that north facing areas. Other logical separations are plant material having significantly different water requirements (turf versus shrubs) and slopes that are steep enough to result in runoff. Only sprinklers with matched precipitation rates for the various sprinkler arcs can be installed on a single lateral. Otherwise, part circle and full circle sprinklers must be separated on different laterals.

Historical evaporation data estimates that Kentucky Bluegrass turf requires approximately 39.5" of water per growing season. Based upon turf studies conducted by Colorado State University, bluegrass can tolerate some stress due to reduction in water. For example, at a rate of 80% of the annual evapotranspiration rate, there is no visible reduction in the quality of the turf. Therefore, to minimize water applications without reducing the quality of the turf, 80% of the 39.5" required per growing season is 31.6", and lowers the amount watered per year by 7.5". Within this region there is a great potential for the use of lower water consuming turf grasses that have a slightly different color and texture than high water consuming turf grasses.

Data provided by Schriever AFB indicates that there are approximately 1,640,000 square feet of turf and 198,000 square feet of shrub beds currently irrigated on base. This is a total of 1,838,000 square feet or 42.2 acres which are irrigated.

Based on the average annual water meter readings and the irrigated area, the average annual water application is 44.7 inches per year

To illustrate the variability of water use by different landscapes, the following table has been generated:

PLANT MATERIAL	ANNUAL PRECIP.	USEABLE WATER	REQUIRED WATER	SUPPLEMENTAL WATER
Kentucky Bluegrass	13.2"	6.6"available	31.6"required	25"
Fescue turf	13.2"	6.6"available	38"required	31.4"
Crested wheat grass	13.2"	6.6"available	20"required	13.4"
Shrubs: High water	13.2"	6.6"available	38"required	31.4"

Shrubs: Dryland	13.2"	6.6"available	20"required	13.4"

Thus a landscape which is more adapted to an arid climate requires 6-18" less water per year.

- A. **Existing Control System**
  As-built drawings show an independent control type of system with one controller for each irrigation water source. The controllers are spread throughout the site.

  There are 11 existing controllers shown on the as-builts with 126 stations used and 149 available. An additional four or five controllers may be added in 1996 due to projects under consideration.

  The as-built drawings and discussions with the current maintenance group indicate that there was a communication wire installed for the control system during the initial construction. The maintenance group indicates that this wire has been cut numerous times due to various construction project on base and is useless.

  Based on water meter readings from 1990 through 1995, the average cost of irrigation water exceeds $90,000 to apply 44.7 inches of water annually to the 42.2 landscaped acres.

  B. **Potential for Centralized Irrigation Control**
  It is estimated that a properly designed and managed irrigation system would require 31.2 inches annually. This is a savings of 13.5 inches of water annually compared to the existing system. Based on current water costs of $1.32 per CCF, the 13.5 inches of water equals approximately $27,000.

  A centralized irrigation control system will allow for management of all the controllers from a single location, interrogation of an on-site weather station, and scheduling of irrigations on a daily basis to match climatic conditions along with many other capabilities. By scheduling irrigations based on current climatic data, the amount of water applied by the irrigation system will match the amount of water needed by the plant material.

  The cost of a centralized irrigation control system compatible with the existing conditions is $60,000 to $75,000, depending on the mode of communication. This would include software, the central controller, a communication device at the central, communication devices at each controller location, on-site weather station, the appropriate surge protection on primary and secondary wiring, and the proper grounding. The lower cost estimate assumes the use of radio communication. The higher cost estimate assumes the use of telephones. The system would be compatible with any future base expansion.

  With a cost of $60,000 to $75,000 and a potential savings of $27,000 annually, the potential payback period is two to three years.

  It is recommended that centralized control system be implemented for the base. With the high cost of water and short payback period, implementation of centralized control is a viable project which will conserve both water and dollars and will assist the base achieve it's water conservation goals.

  One potential problem with the implementation of centralized control is the type of communication to be used. UHF radio was assumed for the cost estimate. However, alternatives

include UHF, VHF, conventional, and trunked radio; paging technology; telephone; and hardwire. Obviously, a method of communication which will not interfere with the base operations must be selected. Hardwiring the satellites to the central is a potential option. However, the cost of implementation will be more expensive than the estimates given due to the labor required to install the communication cable through the base to all the controller locations.

Another potential problem with implementation of centralized control is the existing irrigation system itself. The as-built drawings show numerous locations where the sprinkler spacing is stretched. When these areas are watered with the minimal amount of water required by the plant materal, brown spots may be seen. This is caused by the nonuniform application of water due to the stretched sprinkler spacing. To minimize the number of brown spots, more water than is absolutely needed may be required. Therefore, the actual savings realized by the implementation of centralized control may be less than that estimated.

MULCHES

Organic mulches provide a layer which moderates the temperature of the soil, thereby reducing the evaporation and subsequent water use. A rich organic mulch will catch and hold moisture near the plant, while reducing runoff. This is especially important with the heavy rains experienced in the region. These rains are often hard with large droplets that deteriorate the soil structure, leaving it hard and crusty. Organic mulches reduce the impact of a hard rain by dissipating the force of the droplets and quickly absorbing the rain. Organic mulches also reduce the growth of weeds and provide nutrients to the soil as they decompose. Mulches can be placed over breathable weed barrier fabric to a depth of 3".

SOIL IMPROVEMENTS

Within the developed portion of Schriever AFB there are three types of soils: Ascalon Sandy Loam, Truckton Sandy Loam, and Blendon Sandy Loam. These soils are well drained. Soil analysis should be required prior to any landscape installations to ensure adequate and appropriate amendments are added to the soil. This is especially important in areas of heavy compaction or soil contamination.

Soil improvements should be added when a landscape is renovated or installed. The improvement consists of well-composted organic material that is incorporated into the top 6-8" of the soil. Typically, 3-5 cubic yards are added per 1000 sq.ft. These improvements will allow for better water penetration and improve the water holding capacity of the soil, thus making watering more effective.

MAINTENANCE

A well-executed maintenance program will reduce water consumption as well as improve the overall quality of the landscape installations. The maintenance program needs to include all components of the landscape i.e. turf fertilization, pest control, irrigation adjustment, tree pruning, perennial division.

Master Plant Table

Master Plant List

Shade Trees

Landscape Installation Specifications 02900

Irrigation Installation Specifications

Deciduous Tree Planting Detail

DECIDUOUS SHADE TREES	
Common Name	**Botanical Name**
Hackberry	*Celtis occidentalis*
Patmore Green Ash	*Fraxinus pennsylvanica 'Patmore'*
Summit Green Ash	*Fraxinus pennsylvanica 'Summit'*
Marshall Green Ash	*Fraxinus pennsylvanica 'Marshall'*
Shademaster Honeylocust	*Gleditsia triacanthos inermis 'Shademaster'*
Skyline Honeylocust	*Gleditsia triacanthos inermis 'Skyline'*
Western Catalpa	*Catalpa speciosa*
Kentucky Coffee Tree	*Gymnocladus diocia*
Black Walnut	*Juglans nigra*
Bur Oak	*Quercus macrocarpa*
Black Locust	*Robina pseudoacacia*

Back to Previous Page

Master Plant List

Ornamental Trees

Landscape Installation Specifications 02900

Irrigation Installation Specifications

Deciduous Tree Planting Detail

ORNAMENTAL TREES	
Common Name	**Botanical Name**
Golden Raintree	*Koelrueteria paniculata*
Amur Chokecherry	*Prunus maacki*
Russian Olive	*Eleagnus angustifolia*
Shubert Chokecherry	*Prunus virginiana 'Shubert'*
Scrub Oak	*Quercus gambelii*
Washington Hawthorn	*Crataegus phaenopyrum*
Downy Hawthorn	*Crataegus mollis*
Cockspur Hawthorn	*Crataegus crusgalli*
English Hawthorn	*Crataegus laevigata*
Russian Hawthorn	*Crataegus ambigua*
Wahsatch Maple	*Acer grandidentatum*

Back to Previous Page

Master Plant List

Evergreen Trees

Landscape Installation Specifications 02900

Irrigation Installation Specifications

Evergreen Tree Planting Detail

EVERGREEN TREES	
Common Name	**Botanical Name**
Bristlecone Pine	*Pinus aristata*
Pinon Pine	*Pinus edulis*
Rocky Mtn. Juniper	*Juniperus scopulorum*
Ponderosa Pine	*Pinus ponderosa*
Cologreen Juniper	*Juniperus scopulorum 'Cologreen'*

Back to Previous Page

Master Plant List

Deciduous Shrubs

Landscape Installation Specifications 02900 ◆ Irrigation Installation Specifications ◆ Deciduous Shrub Planting Detail

LARGE DECIDUOUS SHRUBS	
Common Name	**Botanical Name**
Silverberry	*Elaeagnus commutata*
Sea Buckthorn	*Hippophae rhamnoides*
Rock Spirea	*Holodiscus dumosus*
Silver Buffaloberry	*Shepherdia argentea*
Native Chokecherry	*Prunus virginiana melancarpa*
Lilac	*Syringa vulgaris*
Siberian Pea Shrub	*Caragana aborescens*
American Plum	*Prunus americana*
New Mexico Privet	*Forestiera neo-mexicana*
Sage	*Artemsia tridentata*
Staghorn Sumac	*Rhus tyhina*
Smooth Sumac	*Rhus glabra*
Mountain Mahogany	*Cercocarpus montanus*
Curlyleaf Mahogany	*Cercocarpus ledifolius*
Common Ninebark	*Physocarpus opulifolius*
Utah Serviceberry	*Amelanchier utahensis*
Saskatoon Serviceberry	*Amelanchier alnifolia*
MEDIUM DECIDUOUS SHRUBS	
Common Name	**Botanical Name**
Antelope Bush	*Purshia tridentata*
Apache Plume	*Fallugia paradoxa*
Korean Barberry	*Berberis koreana*

Western Sand Cherry	*Prunus besseyi*
Fernbush	*Chamaebatiara millefolium*
Rabbitbrush	*Chrysothamnus nauseosus albicaulis*
Moonlight Broom	*Cytisus scoparius 'Moonlight'*
Threeleaf Sumac	*Rhus trilobata*
Alpine Currant	*Ribes alpinum*
Yellow Flowering Currant	*Ribes aureum*
SMALL DECIDUOUS SHRUBS	
Common Name	**Botanical Name**
Lead Plant	*Amorpha canescens*
Fragrant False Indigo	*Baptisia australis*
Redleaf Barberry	*Berberis thunbergii var. atropurpurea*
Pygmy Pea Shrub	*Caragana pygmaea*
Blue Mist Spirea	*Caryopteris x clandonensis*
Dwarf Blue Rabbitbrush	*Chrysothamnus nauseosus nauseosus*
Lena Broom	*Cytisus x 'Lena'*
Russian Sage	*Perovskia atriplicifolia*
Native Ninebark	*Physocarpus monogynus*
Potentilla	*Potentilla fruiticosa*
Squaw Currant	*Ribes cereum*
Redshrub Rose	*Rosa x 'Adelaide Hoodless'*
Bonica Rose	*Rosa x 'Bonica'*
Austrian Copper Rose	*Rosa foetida 'Bicolor'*
Persian Yellow Rose	*Rosa foetida 'Persiana'*
Hancock Coralberry	*Symphoricarpos x chenaulti 'Hancock'*
Yucca	*Yucca baccata*
Soapweed	*Yucca glauca*
EVERGREEN SHRUBS	
Common Name	**Botanical Name**
Mugo Pine	*Pinus mugo*
Armstrong Juniper	*Juniperus chinensis 'Armstrong'*

Greenmound Juniper	*Juniperus procumbens 'Greenmound'*
Holbert Juniper	*Juniperus chinensis 'Holbert'*
Sea Green Juniper	*Juniperus chinensis 'Sea Green'*
Blue Chip Juniper	*Juniperus horizontalis 'Blue Chip'*
Hughes Juniper	*Juniperus horizontalis 'Hughes'*
Wilton Carpet Juniper	*Juniperus horizontalis 'Wiltonii'*
Arcadia Juniper	*Juniperus sabina 'Arcadia'*
Buffalo Juniper	*Juniperus sabina 'Buffalo'*
Calgary Carpet Juniper	*Juniperus sabina 'Calgary Carpet'*
Scandia Juniper	*Juniperus sabina 'Scandia'*
Tammy Juniper	*Juniperus sabina 'Tamariscifolia'*
Table Top Blue Juniper	*Juniperus scopulorum 'Table Top Blue'*

Return to Previous Page

Master Plant List

Perennials

Landscape Installation Specifications 02900 ◆ Irrigation Installation Specifications ◆ Perennial Planting Detail

PERENNIALS	
Common Name	**Botanical Name**
Blanket Flower	*Gaillardia aristata*
Daylily	*Hemerocallis*
Bearded Iris	*Iris hybrids*
Penstemon	*Penstemon sp.*
California Poppy	*Eschscholzia californica*
Red Hot Poker	*Kniphofia uvaria*
Santolina	*Santolina chamuecyparissus*
Yarrow	*Achillea millefolium*
Sage	*Artemisia schmidtiam*
Gay Butterfly	*Asclepias tuberosa*
False Indigo	*Baptisia australis*
Chocolate Flower	*Berlandiera lyrata*
Poppy Mallow	*Callirhoe involucrata*
Bluebells	*Campanula cochlearifolia*
Dwarf Coreopsis	*Coreopsis auriculata nana*
Ice Plant	*Delosperma nubigenum*
Sulfur Flower	*Eriogonum umbellatum*
Wallflower	*Erysimum asperum*
Spurge	*Euphurbia epithymoides*
Snakeweed	*Gutierrezia sarothrae*
Baby's Breath	*Gypsophila paniculata*
Sunrose	*Helianthemum nummularium*

Lavender	*Lavandula angustifolia*
Flax	*Linum perenne*
Aster	*Machaeranthera bigelovii*
Bee Balm	*Monarda didyma*
New Mexico Primrose	*Oenothera berlandieri*
Speedwell	*Veronica sp.*
Hummingbird Flower	*Zauschneria californica latifolia*

GROUNDCOVERS

Common Name	**Botanical Name**
Featherleaf Penstemon	*Penstemon pinifolius*
Border Jewel	*Polygonum affine*
Fleece Flower	*Polygonum reynoutria*
Pussytoes	*Antennaria rosea*
Sedum	*Sedum*
Wild Strawberry	*Fragaria americana*

ORNAMENTAL GRASSES

Common Name	**Botanical Name**
Blue Fescue Grass	*Festuca ovina glauca*
Blue Avena Grass	*Helictotrichon semperviens*
Maidengrass	*Miscanthus sinensis gracillimus*
Ribbon Grass	*Phalaris arundinacea 'Picta'*
Dwarf Fountain Grass	*Pennisetum alopecuroides 'Hamelin'*

Back to Previous Page

Master Plant List
Grass

Landscape Installation Specifications 02900 ◆ Irrigation Installation Specifications

Grass	
Common Name	**Description**
Kentucky Bluegrass	*Early spring green-up, late fall goes dormant.* *Deep green appearance.* *Dense coverage.* *3" mowed height.*
Fescue Sod	*Early spring green-up, late fall goes dormant.* *Coarser texture than Kentucky Bluegrass sod.* *Can be more drought tolerant than Bluegrass once established.* *Dense coverage.* *3" mowed height.*
Buffalo Grass	*Warm season grass, late spring green-up.* *Blue/green color to grass.* *Looses color in fall once cool temperatures occur.* *Fine leaf texture.* *Medium coverage.* *6" in height with seed heads.*
Prairie Meadow Mix	*Variety of light, color, and texture.* *Intent is that it is not mowed.* *Seasonal color, with summer flowers and winter interest with grass seed heads 12" in height.*
Dryland Seed Mix	*8-12" in height.* *Variety of color and texture.* *Can be mowed to 6", monthly.*

Back to Previous Page

ATTACHMENT NO. 3

AVAILABLE EDITED AND UNEDITED GUIDE SPECFICATIONS

ABBREVIATIONS

UFGS – UNEDITED UNIFIED FACILITIES GUIDE SPECIFICATIONS (FOR CONTRACTOR EDIT)
CEGS - 0MAHA – UNEDITED OMAHA DISTRICT CORPS OF ENGINEERS GUIDE SPECIFICATIONS, COPY INCLUDED AT END OF THIS INDEX. THERE MAY BE SOME PARTIAL EDITING ALREADY DONE.
RFP – EDITED RFP SECTIONS TO BE USED WITHOUT CHANGE

COPIES OF EACH OF THE SPECIFICATIONS SECTIONS (SPECSINTACT FORMAT) LISTED BELOW HAS BEEN PROVIDED ON THE SOLICITATION CD-ROM UNDER FOLDER LABELED “GUIDES”. SECTIONS ARE UFGS UNLESS LABELED OTHERWISE.

USE OF UFGS SECTIONS

Unless directed otherwise, use UFGS sections. Available UFGS sections include sections that have a 5 digit section number with either the letters "A" or "N" following the section number or no letter following the section number. The letters designate the specification proponent ("A" is for USACE and "N" is for NAVFAC). The Contractor shall use sections with the letter "A" following the section number or sections with no letter following the section number. Sections with the letter "N" following the section number shall not be used unless there is no other available section, the solicitation directs the use of these sections or the available sections do not meet the solicitation requirements. Where UFGS sections include tailoring options for both Army and Navy, use the Army tailoring option. Where conflicts exist that cannot be resolved, the Contracting Officer shall be contacted to resolve the issue.

TABLE OF CONTENTS

DIVISION 00 – CONTRACT REQUIREMENTS
00800 SPECIAL CONTRACT REQUIRMENTS (RFP)

DIVISION 01 - GENERAL REQUIREMENTS
01040 AS-BUILT DRAWINGS (RFP)
01200 WARRANTY OF CONSTRUCTION (RFP)
01330 SUBMITTAL PROCEDURES (RFP)
01355 ENVIRONMENT PROTECTION (RFP)
01356 STORM WATER POLLUTION PREVENTION MEASURES (CEGS)
01420 12/02 SOURCES FOR REFERENCE PUBLICATIONS (UFGS)
01451A CONTRACTOR QUALITY CONTROL (RFP)
01565 (FEDERAL FACILITIES COLORADO) NPDES PERMIT REQUIREMENTS FOR STORM WATER DISCHARGES FROM CONSTRUCTION SITES (CEGS)
01572 10/01 CONSTRUCTION AND DEMOLITION WASTE MANAGEMENT (UFGS)
01670 RECYCLED/RECOVERED MATERIALS (RFP)
01781 12/01 OPERATION AND MAINTENANCE DATA

DIVISION 02 - SITE WORK
(UFGS UNLESS DESIGNATED OTHERWISE)

02111 09/01 EXCAVATION AND HANDLING OF CONTAMINATED MATERIAL
02115A 02/02 UNDERGROUND STORAGE TANK REMOVAL
02115N 09/99 REMOVAL AND DISPOSAL OF UNDERGROUND STORAGE TANKS
02120A 10/96 TRANSPORTATION AND DISPOSAL OF HAZARDOUS MATERIALS
02140A 12/99 SELECT FILL AND TOPSOIL FOR LANDFILL COVER
02150A 02/02 PIPING; OFF-GAS
02151A 03/99 SOIL WASHING THROUGH SEPARATION/SOLUBILIZATION
02160A 10/00 SOLIDIFICATION/STABILIZATION (S/S) OF CONTAMINATED MATERIAL
02180A 09/98 REMEDIATION OF CONTAMINATED SOILS AND SLUDGES BY INCINERATION
02181A 09/98 REMEDIATION OF CONTAMINATED SOILS BY THERMAL DESORPTION
02190A 12/02 BIOREMEDIATION OF SOILS USING LANDFARMING SYSTEMS
02191A 03/02 BIOREMEDIATION OF SOILS USING WINDROW COMPOSTING
02210A 10/95 SUBSURFACE DRILLING, SAMPLING, AND TESTING
02217A 12/92 FOUNDATION PREPARATION
02220 05/02 DEMOLITION
02226 11/97 REMOVAL AND SALVAGE OF HISTORIC BUILDING MATERIALS
02231 07/02 CLEARING AND GRUBBING
02233 07/02 CLEARING FOR CIVIL WORKS
02251A 09/95 FOUNDATION DRILLING AND GROUTING
02260A 09/98 SOIL-BENTONITE SLURRY TRENCH FOR HTRW PROJECTS
02261A 10/92 SOIL-BENTONITE SLURRY TRENCH CUTOFF
02300A 12/97 EARTHWORK
02301N 09/00 EARTHWORK FOR STRUCTURES AND PAVEMENTS
02302N 09/99 EXCAVATION, BACKFILLING, AND COMPACTING FOR UTILITIES
02315A 08/98 EXCAVATION, FILLING AND BACKFILLING FOR BUILDINGS
02315N 01/01 EXCAVATION AND FILL
02316A 05/02 EXCAVATION, TRENCHING, AND BACKFILLING FOR UTILITIES SYSTEMS
02318A 10/00 TEST FILL
02325N 09/99 DREDGING
02330A 08/94 EMBANKMENT FOR EARTH DAMS
02331A 08/99 LEVEE CONSTRUCTION
02332A 08/99 REINFORCED SOIL SLOPE
02361N 01/02 SOIL TREATMENT FOR SUBTERRANEAN TERMITE CONTROL
02362N 01/02 BASALTIC TERMITE BARRIER
02363N 09/01 TERMITE CONTROL BARRIER SYSTEM
02364A 06/98 TERMITICIDE TREATMENT MEASURES FOR SUBTERRANEAN TERMITE CONTROL
02370A 01/03 SOIL SURFACE EROSION CONTROL
02371A 09/02 WIRE MESH GABIONS [AND MATTRESSES]
02372A 10/01 WASTE CONTAINMENT GEOMEMBRANE
02373 09/01 GEOTEXTILE
02374A 01/03 GEOSYNTHETIC DRAINAGE LAYER
02375A 10/00 GEOGRID SOIL REINFORCEMENT
02376A 03/98 GEOSYNTHETIC CLAY LINER (GCL)
02377A 04/99 CLAY BARRIER LAYER
02378A 05/95 GEOTEXTILES USED AS FILTERS
02380A 10/01 STONE, CHANNEL, SHORELINE/COASTAL PROTECTION FOR STRUCTURES

02382 03/02 ARTICULATING CONCRETE BLOCK REVETMENTS
02390A 07/98 MOORING AND GROUNDING POINTS FOR AIRCRAFT
02395N 09/99 PRESTRESSED CONCRETE FENDER PILING
02396N 09/99 RESILIENT FOAM-FILLED MARINE FENDERS
02397N 09/99 ARCH-TYPE RUBBER MARINE FENDERS
02398N 09/99 PIER TIMBERWORK
02430A 07/95 TUNNEL AND SHAFT GROUTING
02441N 09/99 TRENCHLESS EXCAVATION USING MICROTUNNELING
02453A 10/01 PRESTRESSED CONCRETE PILING FOR CIVIL WORKS
02454A 02/98 PRECAST CONCRETE PILING
02455A 11/97 CAST-IN-PLACE CONCRETE PILES, STEEL CASING
02456A 02/98 STEEL H-PILES
02456N 02/02 PRESTRESSED CONCRETE PILES
02457A 02/98 ROUND TIMBER PILES
02457N 09/99 STEEL SHEET PILES
02458A 02/98 PRESTRESSED CONCRETE PILING
02458N 09/99 TIMBER PILES
02459A 02/98 PILING: COMPOSITE, WOOD AND CAST IN-PLACE CONCRETE
02459N 09/99 CAST-IN-PLACE CONCRETE PILES
02460N 09/99 STEEL H PILES
02461A 10/01 ROUND TIMBER PILES FOR HYDRAULIC STRUCTURES
02461N 09/99 WOOD MARINE PILES
02463A 10/01 STEEL H-PILES FOR CIVIL WORKS
02464A 05/92 METAL SHEET PILING
02465A 11/97 AUGER-PLACED GROUT PILES
02466A 12/97 DRILLED FOUNDATION CAISSONS (PIERS)
02466N 09/99 PRESSURE-INJECTED FOOTINGS
02467N 09/99 AUGER CAST GROUT PILES
02468N 09/99 DRILLED FOUNDATION CAISSONS
02490 12/01 SOIL AND ROCK ANCHORS
02510A 05/02 WATER DISTRIBUTION SYSTEM
02510N 09/00 WATER DISTRIBUTION
02521A 11/99 WATER WELLS
02521N 09/99 WATER SUPPLY WELL
02522A 05/98 GROUND-WATER MONITORING WELLS
02525A 09/01 RELIEF WELLS
02525N 09/99 [EXTRACTION] [MONITORING] WELLS
02531 07/02 SANITARY SEWERS
02532A 07/98 FORCE MAINS AND INVERTED SIPHONS; SEWER
02551N 08/01 NATURAL GAS DISTRIBUTION
02552A 02/02 PRE-ENGINEERED UNDERGROUND HEAT DISTRIBUTION SYSTEM
02552N 08/01 EXTERIOR SHALLOW TRENCH STEAM DISTRIBUTION
02553A 12/01 HEAT DISTRIBUTION SYSTEMS IN CONCRETE TRENCHES
02553N 08/01 EXTERIOR UNDERGROUND STEAM DISTRIBUTION SYSTEM
02554A 12/01 ABOVEGROUND HEAT DISTRIBUTION SYSTEM
02554N 08/01 EXTERIOR ABOVEGROUND STEAM DISTRIBUTION
02555A 12/01 PREFABRICATED UNDERGROUND HEATING/COOLING DISTRIBUTION SYSTEM
02555N 08/01 EXTERIOR FUEL DISTRIBUTION
02556A 12/02 GAS DISTRIBUTION SYSTEM
02556N 02/01 EXTERIOR BURIED PUMPED CONDENSATE RETURN
02557N 09/99 EXTERIOR BURIED PREINSULATED WATER PIPING
02559N 08/01 VALVE MANHOLES AND PIPING AND EQUIPMENT IN VALVE MANHOLES
02560 (COLORADO) PAVEMENTS FOR SMALL PROJECTS (CEGS)
02570A 07/02 VALVE MANHOLES AND PIPING AND EQUIPMENT IN VALVE MANHOLES

02582N 09/99 ELECTRICAL MANHOLE AND HANDHOLE
02588N 09/99 CONCRETE POLES
02620A 09/01 SUBDRAINAGE SYSTEM
02621A 01/98 FOUNDATION DRAINAGE SYSTEM
02630A 03/00 STORM-DRAINAGE SYSTEM
02630N 09/99 STORM DRAINAGE
02661 09/99 POND AND RESERVOIR LINERS
02710A 12/97 BITUMINOUS-STABILIZED BASE COURSE, SUBBASE, OR SUBGRADE
02711A 03/98 PORTLAND CEMENT-STABILIZED BASE OR SUBBASE COURSE
02711N 09/99 BITUMINOUS CONCRETE BASE COURSE
02712A 12/97 LIME-STABILIZED BASE COURSE, SUBBASE, OR SUBGRADE
02712N 09/99 LEAN CONCRETE BASE COURSE
02713A 08/97 BITUMINOUS BASE COURSE
02713N 09/99 CEMENT STABILIZED [BASE] [SUBBASE] COURSE AT AIRFIELDS AND ROADS
02714A 07/01 DRAINAGE LAYER
02714N 09/99 LIME TREATED SUBGRADE [LIME MODIFIED SOILS]
02721A 03/97 SUBBASE COURSES
02721N 09/99 [BASE COURSE FOR RIGID] [AND SUBBASE COURSE FOR FLEXIBLE] PAVING
02722A 05/01 AGGREGATE AND/OR GRADED-CRUSHED AGGREGATE BASE COURSE
02722N 09/99 GRADED CRUSHED AGGREGATE BASE COURSE FOR FLEXIBLE PAVEMENT
02723N 09/99 SAND-CLAY [BASE] [SUBBASE] COURSE
02731A 01/98 AGGREGATE SURFACE COURSE
02741A 09/99 HOT-MIX ASPHALT (HMA) FOR ROADS
02741N 09/99 BITUMINOUS CONCRETE PAVEMENT
02742A 07/97 BITUMINOUS BINDER AND WEARING COURSES (CENTRAL-PLANT COLD-MIX)
02742N 09/99 HOT MIX BITUMINOUS PAVEMENT
02743N 09/99 BITUMINOUS PRIME COAT
02744A 07/97 BITUMINOUS ROAD-MIX SURFACE COURSE
02744N 09/99 BITUMINOUS TACK COAT
02745A 07/97 BITUMINOUS SURFACE TREATMENT
02746 02/97 RESIN MODIFIED PAVEMENT SURFACING MATERIAL
02747 01/98 POROUS FRICTION COURSE FOR AIRFIELDS AND ROADS
02748A 01/98 BITUMINOUS TACK AND PRIME COATS
02749 03/02 HOT-MIX ASPHALT (HMA) FOR AIRFIELDS
02751N 11/02 CONCRETE PAVEMENT FOR AIRFIELDS AND OTHER HEAVY DUTY PAVEMENTS
02752N 09/01 PORTLAND CEMENT CONCRETE PAVEMENT FOR ROADS AND SITE FACILITIES
02753A 01/02 CONCRETE PAVEMENT FOR AIRFIELDS AND OTHER HEAVY-DUTY PAVEMENTS
02754A 07/01 CONCRETE PAVEMENTS FOR SMALL PROJECTS
02755A 07/01 ROLLER COMPACTED CONCRETE (RCC) PAVEMENT
02760A 03/97 FIELD MOLDED SEALANTS FOR SEALING JOINTS IN RIGID PAVEMENTS
02761A 12/00 FUEL-RESISTANT (COAL TAR) SEALER
02761N 8/02 PAVEMENT MARKINGS
02762A 11/01 COMPRESSION JOINT SEALS FOR CONCRETE PAVEMENTS
02762N 09/99 JOINTS, REINFORCEMENT, AND MOORING EYES IN CONCRETE PAVEMENTS
02763A 04/01 PAVEMENT MARKINGS
02770A 03/98 CONCRETE SIDEWALKS AND CURBS AND GUTTERS
02780 01/98 CONCRETE BLOCK PAVEMENTS

02785A 07/97 BITUMINOUS SEAL COAT, SPRAY APPLICATION
02785N 09/99 BITUMINOUS SEAL COAT
02786N 09/99 FOG SEAL
02787 09/01 SLURRY SEAL
02787A 04/98 BITUMINOUS REJUVENATION
02788N 09/99 COAL TAR SEAL COAT WITH UNVULCANIZED RUBBER
02789N 09/99 BITUMINOUS SURFACE TREATMENT
02791 06/01 PLAYGROUND PROTECTIVE SURFACING
02811A 02/02 UNDERGROUND SPRINKLER SYSTEMS
02811N 08/01 IRRIGATION SPRINKLER SYSTEMS
02821A 02/02 FENCING
02821N 09/99 CHAIN LINK FENCES AND GATES
02832 08/99 SEGMENTAL CONCRETE BLOCK RETAINING WALL
02840A 02/02 ACTIVE VEHICLE BARRIERS
02841N 08/01 TRAFFIC BARRIERS
02870A 06/01 SITE FURNISHINGS
02870N 09/99 SITE AND STREET FURNISHINGS
02882 06/01 PLAYGROUND EQUIPMENT
02915A 01/02 TRANSPLANTING EXTERIOR PLANT MATERIAL
02921A 11/02 SEEDING
02921N 09/99 TURF
02922A 07/02 SODDING
02923A 01/02 SPRIGGING
02930A 01/02 EXTERIOR PLANTING
02930N 02/02 EXTERIOR PLANTS
02935A 01/02 EXTERIOR PLANT MATERIAL MAINTENANCE
02935N 09/99 LANDSCAPE MAINTENANCE
02951A 08/97 RUNWAY RUBBER REMOVAL
02961N 03/98 COLD-MILLING OF BITUMINOUS PAVEMENT
02964A 03/98 COLD MILLING OF BITUMINOUS PAVEMENTS
02965A 08/97 COLD-MIX RECYCLING
02966A 08/97 HOT IN-PLACE RECYCLING OF BITUMINOUS PAVEMENTS
02967A 04/01 HEATER SCARIFYING OF BITUMINOUS PAVEMENTS
02975A 07/97 SEALING OF CRACKS IN BITUMINOUS PAVEMENTS
02976N 09/99 STRESS-ABSORBING MEMBRANE INTERLAYER
02980A 08/97 PATCHING OF RIGID PAVEMENTS
02981A 11/97 GROOVING FOR AIRFIELD PAVEMENTS
02981N 09/99 RUBBER AND PAINT REMOVAL FROM AIRFIELD PAVEMENTS
02982N 09/99 RESEALING OF JOINTS IN RIGID PAVEMENT
02983N 09/99 PARTIAL DEPTH PATCHING OF RIGID PAVEMENT
02985A 12/97 SLABJACKING RIGID PAVEMENTS

DIVISION 03 - CONCRETE
(UFGS UNLESS DESIGNATED OTHERWISE)

03100A 05/98 STRUCTURAL CONCRETE FORMWORK
03101A 09/01 FORMWORK FOR CONCRETE
03150A 05/98 EXPANSION JOINTS, CONTRACTION JOINTS, AND WATERSTOPS
03151A 09/01 EXPANSION, CONTRACTION AND CONSTRUCTION JOINTS IN CONCRETE FOR CIVIL WORKS
03200A 09/97 CONCRETE REINFORCEMENT
03201 10/01 STEEL BARS AND WELDED WIRE FABRIC FOR CONCRETE REINFORCEMENT FOR CIVIL WORKS
03230 09/01 STEEL STRESSING TENDONS AND ACCESSORIES FOR PRESTRESSED CONCRETE

03300 11/01 CAST-IN-PLACE STRUCTURAL CONCRETE
03300N 02/02 CAST-IN-PLACE CONCRETE
03301A 09/01 CAST-IN-PLACE STRUCTURAL CONCRETE FOR CIVIL WORKS
03307A 11/01 CONCRETE FOR MINOR STRUCTURES
03311 09/99 MARINE CONCRETE
03330A 03/02 CAST-IN-PLACE ARCHITECTURAL CONCRETE
03340A 06/97 ROOF DECKING, CAST-IN-PLACE LOW DENSITY CONCRETE
03371 09/01 SHOTCRETE
03372 09/01 PREPLACED-AGGREGATE CONCRETE
03373 09/01 CONCRETE FOR CONCRETE CUTOFF WALLS
03410A 05/98 PRECAST/PRESTRESSED CONCRETE FLOOR AND ROOF UNITS
03410N 03/00 PLANT-PRECAST STRUCTURAL CONCRETE
03412N 09/99 PLANT-PRECAST PRESTRESSED STRUCTURAL CONCRETE
03413A 05/98 PRECAST ARCHITECTURAL CONCRETE
03414A 03/89 PRECAST ROOF DECKING
03415A 09/01 PRECAST-PRESTRESSED CONCRETE
03450 09/99 PLANT-PRECAST ARCHITECTURAL CONCRETE
03511A 09/96 GYPSUM PLANK DECKING (CONTRACTOR'S OPTION)
03520N 09/99 LIGHTWEIGHT CONCRETE ROOF INSULATION
03700 07/92 MASS CONCRETE
03701 10/01 ROLLER-COMPACTED CONCRETE FOR MASS CONCRETE CONSTRUCTION
03900 12/97 RESTORATION OF CONCRETE IN HISTORIC STRUCTURES
03930 09/99 CONCRETE REHABILITATION

DIVISION 04 - MASONRY
(UFGS UNLESS DESIGNATED OTHERWISE)

04200 08/02 MASONRY
04215 08/02 GLAZED STRUCTURAL CLAY TILE AND PREFACED CONCRETE MASONRY UNITS
04270 08/02 GLASS MASONRY UNITS
04810 08/02 NONBEARING MASONRY VENEER/STEEL STUD WALLS
04900 05/97 RESTORATION AND CLEANING OF MASONRY IN HISTORIC STRUCTURES

DIVISION 05 - METALS
(UFGS UNLESS DESIGNATED OTHERWISE)

05055A 12/92 METALWORK FABRICATION, MACHINE WORK, MISCELLANEOUS PROVISIONS
05090A 09/98 WELDING, STRUCTURAL
05091A 09/98 ULTRASONIC INSPECTION OF WELDMENTS
05092A 09/98 ULTRASONIC INSPECTION OF PLATES
05093A 09/98 WELDING PRESSURE PIPING
05120 07/02 STRUCTURAL STEEL
05210A 01/02 STEEL JOISTS
05210N 09/00 STEEL JOISTS [AND JOIST GIRDERS]
05300A 01/02 STEEL DECKING
05310N 09/99 STEEL DECKS
05400A 01/02 COLD-FORMED STEEL FRAMING
05400N 09/99 COLD-FORMED METAL FRAMING
05500A 01/02 MISCELLANEOUS METAL
05500N 05/02 METAL FABRICATIONS
05502A 05/92 METALS: MISCELLANEOUS, STANDARD ARTICLES, SHOP FABRICATED ITEMS
05615A 04/93 STOPLOGS

05650A 11/02 RAILROADS
05650N 08/01 RAILROAD TRACK AND ACCESSORIES
05652N 09/99 WELDING CRANE AND RAILROAD RAIL - THERMITE METHOD

DIVISION 06 - WOODS & PLASTICS
(UFGS UNLESS DESIGNATED OTHERWISE)

06100A 02/02 ROUGH CARPENTRY
06100N 09/99 ROUGH CARPENTRY
06200A 11/01 FINISH CARPENTRY
06200N 09/99 FINISH CARPENTRY
06410A 11/01 LAMINATE CLAD ARCHITECTURAL CASEWORK
06650 10/00 SOLID POLYMER (SOLID SURFACING) FABRICATIONS
06650N 09/99 SOLID POLYMER FABRICATIONS

DIVISION 07 - THERMAL & MOISTURE PROTECTION
(UFGS UNLESS DESIGNATED OTHERWISE)

07110A 09/98 BITUMINOUS DAMPPROOFING
07112N 09/99 BITUMINOUS DAMPPROOFING
07121N 09/99 BUILT-UP BITUMINOUS WATERPROOFING
07131 03/02 ELASTOMERIC SHEET WATERPROOFING
07132A 09/98 BITUMINOUS WATERPROOFING
07132N 09/01 ELASTOMERIC SHEET WATERPROOFING
07141N 09/99 FLUID-APPLIED WATERPROOFING
07161N 09/99 METALLIC OXIDE WATERPROOFING
07170N 09/99 BENTONITE WATERPROOFING
07190N 09/99 WATER REPELLENTS
07212N 09/99 MINERAL FIBER BLANKET INSULATION
07214N 09/99 BOARD AND BLOCK INSULATION
07216N 09/00 LOOSE FILL THERMAL INSULATION
07220A 10/01 ROOF INSULATION
07220N 03/00 ROOF AND DECK INSULATION
07240 10/01 EXTERIOR INSULATION AND FINISH SYSTEMS
07310 02/95 SLATE ROOFING
07311A 08/98 ROOFING, STRIP SHINGLES
07311N 09/99 ASPHALT SHINGLES
07320A 07/02 CLAY TILE ROOFING
07320N 09/99 ROOF TILES
07410N 09/99 METAL ROOF AND WALL PANELS
07412A 10/01 NON-STRUCTURAL METAL ROOFING
07413A 10/01 METAL SIDING
07416A 11/01 STRUCTURAL STANDING SEAM METAL ROOF (SSSMR) SYSTEM
07510A 10/01 BUILT-UP ROOFING
07511N 09/99 BUILT-UP ASPHALT ROOFING (AGGREGATE SURFACED)
07512N 09/99 BUILT-UP ASPHALT ROOFING (SMOOTH SURFACED)
07513N 09/99 BUILT-UP ASPHALT ROOFING (MINERAL SURFACED)
07515A 01/02 PROTECTED MEMBRANE ROOFING (PMR)
07530A 09/95 ELASTOMERIC ROOFING (EPDM)
07531N 09/99 CHLOROSULFONATED POLYETHYLENE ROOFING (CSPE)
07532N 09/99 POLYISOBUTYLENE (PIB) ROOFING
07536N 09/99 ETHYLENE PROPYLENE DIENE MONOMER (EPDM) ROOFING
07541N 09/99 POLYVINYL CHLORIDE (PVC) ROOFING
07542N 09/99 THERMOPLASTIC ALLOY (TPA) ROOFING

07548A 08/97 POLYVINYL CHLORIDE (PVC) ROOFING
07550N 09/99 MODIFIED BITUMINOUS MEMBRANE ROOFING
07551A 01/02 MODIFIED BITUMEN ROOFING
07570A 11/01 SPRAYED POLYURETHANE FOAM (SPF) ROOFING
07571N 09/99 FOAMED ROOFING
07572N 09/99 COATINGS FOR FOAMED ROOFING
07580N 09/99 ROLL ROOFING
07600A 11/01 SHEET METALWORK, GENERAL
07600N 09/99 FLASHING AND SHEET METAL
07610 08/94 COPPER ROOF SYSTEM
07611N 09/99 STEEL STANDING SEAM ROOFING
07612N 09/99 ALUMINUM STANDING SEAM ROOFING
07620A 08/99 MESH TERMITE BARRIER
07625A 05/01 COPPER SHEET METAL FLASHING
07720A 04/00 ROOF VENTILATORS, GRAVITY-TYPE
07810 08/02 SPRAY-APPLIED FIREPROOFING
07840A 08/00 FIRESTOPPING
07840N 09/99 FIRESTOPPING
07900A 06/97 JOINT SEALING
07920N 09/99 JOINT SEALANTS

DIVISION 08 - DOORS & WINDOWS
(UFGS UNLESS DESIGNATED OTHERWISE)

08110 05/01 STEEL DOORS AND FRAMES
08120 09/99 ALUMINUM DOORS AND FRAMES
08161 08/01 ALUMINUM SLIDING GLASS DOORS
08162 08/01 SLIDING FIRE DOORS
08165A 11/01 SLIDING METAL DOORS
08181 08/01 METAL STORM DOORS
08210 09/99 WOOD DOORS
08302N 08/01 CORROSION CONTROL HANGAR DOORS
08315N 09/01 BLAST RESISTANT DOORS (OVAL ARCH MAGAZINES)
08330A 09/02 OVERHEAD ROLLING DOORS
08331A 09/98 METAL ROLLING COUNTER DOORS
08331N 08/01 ROLLING SERVICE [AND FIRE] DOORS
08342 08/02 STEEL SLIDING HANGAR DOORS
08361 08/01 SECTIONAL OVERHEAD DOORS
08370 08/01 VERTICAL LIFT DOORS
08390 04/01 BLAST RESISTANT DOORS
08510 08/01 STEEL WINDOWS
08520A 03/00 ALUMINUM AND ENVIRONMENTAL CONTROL ALUMINUM WINDOWS
08520N 08/01 ALUMINUM WINDOWS
08550 08/01 WOOD WINDOWS
08560 08/01 PLASTIC WINDOWS
08581 08/01 BLAST RESISTANT TEMPERED GLASS WINDOWS
08582 08/01 ALUMINUM STORM WINDOWS
08590 08/97 WOOD WINDOWS - REPAIR AND REHABILITATION
08600 08/00 SKYLIGHTS
08710 02/02 DOOR HARDWARE
08745 08/01 ELECTRICAL LOCKING CONTROL FOR BRIGS
08800N 09/99 GLAZING
08810A 05/97 GLASS AND GLAZING
08840A 07/95 PLASTIC GLAZING
08850 07/92 FRAGMENT RETENTION FILM FOR GLASS

08900 09/99 GLAZED CURTAIN WALL

DIVISION 09 - FINISHES
(UFGS UNLESS DESIGNATED OTHERWISE)

09100N 09/99 METAL SUPPORT ASSEMBLIES
09200A 06/97 LATHING AND PLASTERING
09205N 09/99 FURRING AND LATHING
09212N 09/00 GYPSUM PLASTER, CEMENT PLASTER, AND STUCCO
09215A 11/95 VENEER PLASTER
09215N 09/99 VENEER PLASTER
09225A 11/95 STUCCO
09250 11/01 GYPSUM BOARD
09310 8/02 CERAMIC TILE, QUARRY TILE, AND PAVER TILE
09330 08/02 CHEMICAL-RESISTANT QUARRY TILE
09410 06/02 PORTLAND CEMENT TERRAZZO
09421A 11/95 TERRAZZO TILE
09445A 01/96 RESINOUS TERRAZZO FLOORING
09510 07/02 ACOUSTICAL CEILINGS
09611N 03/01 THIN FILM FLOORING SYSTEM FOR AIRCRAFT MAINTENANCE FACILITIES
09612N 03/01 EPOXY MORTAR FLOORING SYSTEM FOR AIRCRAFT MAINTENANCE FACILITIES
09620A 01/98 RESILIENT ATHLETIC FLOORING
09640A 11/01 WOOD STRIP FLOORING
09641N 08/01 WOOD ATHLETIC FLOORING
09643N 08/01 PORTABLE (DEMOUNTABLE) WOOD FLOORING
09645 07/02 WOOD PARQUET FLOORING
09650 08/02 RESILIENT FLOORING
09660 08/02 CONDUCTIVE VINYL FLOORING
09670 08/02 FLUID-APPLIED FLOORING
09680A 08/02 CARPET
09680N 08/01 CARPET
09685N 08/01 CARPET TILE
09720 07/02 WALLCOVERINGS
09840A 11/01 ACOUSTICAL WALL TREATMENT
09900 02/02 PAINTS AND COATINGS
09910N 03/00 MAINTENANCE, REPAIR, AND COATING OF TALL ANTENNA TOWERS
09915 08/02 COLOR SCHEDULE
09963N 09/99 HIGH-BUILD GLAZE COATINGS
09965A 12/02 PAINTING: HYDRAULIC STRUCTURES
09965N 08/01 METALLIC TYPE CONDUCTIVE/SPARK RESISTANT CONCRETE FLOOR FINISH
09967N 09/99 COATING OF STEEL WATERFRONT STRUCTURES
09970N 09/01 INTERIOR COATING OF WELDED STEEL PETROLEUM FUEL TANKS
09971 09/01 EXTERIOR COATING OF STEEL STRUCTURES
09971A 10/00 METALLIZING: HYDRAULIC STRUCTURES
09972 09/01 INTERIOR COATING OF WELDED STEEL WATER TANKS
09973 09/01 INTERIOR COATING OF WELDED STEEL PETROLEUM FUEL TANKS
09974N 09/00 PROTECTION OF BURIED STEEL PIPING AND STEEL BULKHEAD TIE RODS
09980N 09/99 INTERIOR LINING FOR CONCRETE STORAGE TANKS (FOR PETROLEUM FUELS)

09981N 09/98 LINSEED OIL PROTECTION OF CONCRETE SURFACES
09995 01/98 PREPARATION OF HISTORIC WOOD AND METAL SURFACES FOR PAINTING

DIVISION 10 - SPECIALTIES
(UFGS UNLESS DESIGNATED OTHERWISE)

10100A 07/02 VISUAL COMMUNICATIONS SPECIALTIES
10153 08/02 TOILET PARTITIONS
10191N 08/01 CUBICLE TRACK AND HARDWARE
10201N 09/99 METAL [WALL] [AND] [DOOR] LOUVERS
10260 07/02 WALL AND CORNER GUARDS
10270A 01/97 RAISED FLOOR SYSTEM
10270N 09/99 ACCESS FLOORING
10430 07/02 EXTERIOR SIGNAGE
10440 07/02 INTERIOR SIGNAGE
10505N 09/99 STEEL CLOTHING LOCKERS
10605N 09/99 WIRE MESH PARTITIONS
10615A 08/00 DEMOUNTABLE PARTITIONS
10650A 08/00 OPERABLE PARTITIONS
10652N 08/01 OPERABLE PANEL PARTITIONS
10655N 08/01 ACCORDION FOLDING PARTITIONS
10675N 09/99 STEEL SHELVING
10716N 08/01 STORM SHUTTERS
10800 07/02 TOILET ACCESSORIES

DIVISION 11 - EQUIPMENT
(UFGS UNLESS DESIGNATED OTHERWISE)

11020 08/02 SECURITY VAULT DOOR
11022A 12/88 DOORS; FIRE-INSULATED, RECORD-VAULT
11025 08/01 FORCED ENTRY RESISTANT COMPONENTS
11035 04/00 BULLET-RESISTANT COMPONENTS
11145A 04/01 AVIATION FUELING SYSTEMS
11161N 09/99 DOCK LEVELERS
11162A 08/00 LOADING DOCK LEVELER
11171N 08/01 PACKAGED INCINERATORS
11181A 02/90 INCINERATORS, GENERAL PURPOSE
11182A 08/01 INCINERATORS, MEDICAL WASTE
11191 09/99 DETENTION AND SECURITY WINDOWS
11192 09/99 DETENTION AND SECURITY GLAZING
11193 09/99 DETENTION HOLLOW METAL FRAMES, DOORS, AND DOOR FRAMES
11194 08/01 DETENTION HARDWARE
11195 09/99 DETENTION FURNITURE AND ACCESSORIES
11211A 12/88 PUMPS: WATER, CENTRIFUGAL
11212A 03/89 PUMPS: WATER, VERTICAL TURBINE
11215A 06/01 FANS/BLOWERS/PUMPS; OFF-GAS
11220A 01/03 PRECIPITATION/COAGULATION/FLOCCULATION WATER TREATMENT
11225A 06/01 DOWNFLOW LIQUID ACTIVATED CARBON ADSORPTION UNITS
11226A 04/98 VAPOR PHASE ACTIVATED CARBON ADSORPTION UNITS
11241A 12/88 CHLORINE-FEEDING MACHINES (AUTOMATIC, SEMIAUTOMATIC AND MANUAL)
11242A 12/01 CHEMICAL FEED SYSTEMS
11243A 04/99 CHEMICAL TREATMENT OF WATER FOR MECHANICAL SYSTEMS
11250A 11/01 WATER SOFTENERS, CATION-EXCHANGE (SODIUM CYCLE)

11285A 01/94 MITER GATES
11286A 01/94 SECTOR GATES
11287A 01/94 TAINTER GATES AND ANCHORAGES
11288A 07/93 VERTICAL LIFT GATES
11289A 04/93 CLOSURE GATES
11301A 04/99 AIR STRIPPER
11310A 11/90 PUMPS; SEWAGE AND SLUDGE
11311 02/02 PARALLEL PLATE [OR VERTICAL TUBE], GRAVITY OIL-WATER SEPARATOR
11312A 04/98 SIPHONS, DOSING
11312N 01/01 PACKAGE [GRINDER PUMP][LIFT] STATION
11313A 04/01 PNEUMATIC SEWAGE EJECTORS
11320N 08/01 GRIT COLLECTING EQUIPMENT
11330A 04/89 SEWAGE BAR SCREEN AND MECHANICAL SHREDDER
11331N 08/01 COMMINUTOR
11334A 01/89 COMMINUTOR
11338N 08/01 CIRCULAR CLARIFIER
11350A 07/01 SLUDGE-COLLECTING EQUIPMENT
11360A 06/01 RECESSED CHAMBER FILTER PRESS SYSTEM
11365A 06/90 TRICKLING FILTER
11375A 11/01 AIR SUPPLY AND DIFFUSION EQUIPMENT FOR SEWAGE TREATMENT
11375N 08/01 AERATION EQUIPMENT
11376 03/93 ULTRAVIOLET DISINFECTION EQUIPMENT
11377 06/01 ADVANCED OXIDATION PROCESSES (AOP)
11378 10/01 THERMAL (CATALYTIC) OXIDATION SYSTEMS
11380 12/89 SLUDGE-DIGESTER GAS, HEATING, AND MIXING SYSTEM
11390 08/01 PREFABRICATED BIOCHEMICAL WASTEWATER TREATMENT PLANT
11391 08/01 CONTINUOUS LOOP REACTOR WASTEWATER TREATMENT SYSTEM
11393 06/01 FILTRATION SYSTEM
11400A 01/02 FOOD SERVICE EQUIPMENT
11400N 09/99 FOOD SERVICE EQUIPMENT
11401N 08/01 ELECTRIC KITCHEN EQUIPMENT
11475 08/01 RADIOGRAPHIC DARKROOM EQUIPMENT
11500A 05/01 AIR POLLUTION CONTROL
11601N 08/01 LABORATORY EQUIPMENT AND FUMEHOODS
11613N 08/01 STILLS AND ASSOCIATED EQUIPMENT
11700N 08/01 GENERAL REQUIREMENTS FOR MEDICAL AND DENTAL EQUIPMENT
11702N 08/01 MEDICAL EQUIPMENT, MISCELLANEOUS
11704N 09/99 [CASEWORK] [AND] [MATERIAL HANDLING UNITS] IN MEDICAL FACILITIES
11706N 09/99 HYDROTHERAPY EQUIPMENT
11707N 08/01 HOSPITAL AND LABORATORY WASHING EQUIPMENT
11708N 09/99 INSTALLATION OF GOVERNMENT-FURNISHED MEDICAL EQUIPMENT
11710A 07/01 WARMING CABINETS, STERILIZERS, AND ASSOCIATED EQUIPMENT
11712N 08/01 STERILIZERS AND ASSOCIATED EQUIPMENT
11744N 09/99 DENTAL EQUIPMENT

DIVISION 12 - FURNISHINGS
(UFGS UNLESS DESIGNATED OTHERWISE)

12301N 09/99 MANUFACTURED VANITIES
12320A 05/98 CABINETS AND COUNTERTOPS
12350A 04/99 CASEWORK FOR MEDICAL AND DENTAL FACILITIES
12351N 03/01 MEDICAL AND DENTAL CASEWORK
12352N 09/99 RESIDENTIAL CASEWORK

12490A 01/98 WINDOW TREATMENT
12490N 09/99 BLINDS, VENETIAN (AND AUDIO VISUAL)
12491N 08/01 CURTAINS AND DRAPES
12600A 03/02 THEATER CHAIRS
12601N 09/99 THEATER SEATING
12705 06/01 FURNITURE SYSTEMS

DIVISION 13 - SPECIAL CONSTRUCTION
(UFGS UNLESS DESIGNATED OTHERWISE)

13034N 08/01 PREFABRICATED AUDIOMETRIC ROOMS
13038 08/01 COLD-STORAGE ROOMS (PREFABRICATED PANEL TYPE)
13080 04/99 SEISMIC PROTECTION FOR MISCELLANEOUS EQUIPMENT
13090A 01/94 X-RAY SHIELDING
13092N 09/99 X-RAY SHIELDING
13093N 12/01 RADIO FREQUENCY SHIELDED ENCLOSURES, DEMOUNTABLE TYPE
13094N 12/01 RADIO FREQUENCY SHIELDED ENCLOSURES, WELDED TYPE
13095A 07/01 ELECTROMAGNETIC (EM) SHIELDING
13095N 09/99 HEMP SHIELDED DOOR
13100A 07/01 LIGHTNING PROTECTION SYSTEM
13100N 09/99 LIGHTNING PROTECTION SYSTEM
13110A 11/98 CATHODIC PROTECTION SYSTEM (SACRIFICIAL ANODE)
13110N 09/00 CATHODIC PROTECTION BY GALVANIC ANODES
13111A 11/98 CATHODIC PROTECTION SYSTEM (STEEL WATER TANKS)
13111N 08/01 CATHODIC PROTECTION BY IMPRESSED CURRENT
13112A 11/98 CATHODIC PROTECTION SYSTEM (IMPRESSED CURRENT)
13112N 03/00 CATHODIC PROTECTION SYSTEM (STEEL WATER TANKS)
13113A 09/01 CATHODIC PROTECTION SYSTEMS (IMPRESSED CURRENT)FOR LOCK MITER GATES
13120A 01/02 STANDARD METAL BUILDING SYSTEMS
13121A 01/02 METAL BUILDING SYSTEMS (MINOR REQUIREMENTS)
13121N 08/01 PREENGINEERED METAL BUILDINGS
13202A 07/02 FUEL STORAGE SYSTEMS
13203A 08/93 TIGHTNESS TESTING OF UNDERGROUND FUEL SYSTEMS
13205N 06/02 STEEL TANKS WITH FIXED ROOFS
13206A 02/02 STEEL STANDPIPES AND GROUND STORAGE RESERVOIRS
13208N 09/99 WIRE-WOUND CIRCULAR PRESTRESSED-CONCRETE WATER TANK
13209N 09/00 WATER STORAGE TANKS
13210A 02/02 ELEVATED STEEL WATER TANK
13210N 2/02 ABOVEGROUND FUEL OIL STORAGE TANKS
13211A 07/89 PRESSURE VESSELS FOR STORAGE OF COMPRESSED GASES
13216N 09/99 UNDERGROUND PETROLEUM TANKS
13217N 09/99 FIBERGLASS-PLASTIC LINING FOR STEEL TANK BOTTOMS (FOR PETROLEUM)
13219N 09/99 CLEANING PETROLEUM STORAGE TANKS
13234A 04/01 FLOATING COVER FOR SLUDGE-DIGESTION TANKS
13280A 11/01 ASBESTOS ABATEMENT
13281A 03/02 LEAD HAZARD CONTROL ACTIVITIES
13281N 01/02 ENGINEERING CONTROL OF ASBESTOS CONTAINING MATERIALS
13282N 02/02 LEAD IN CONSTRUCTION
13283N 02/02 REMOVAL/CONTROL AND DISPOSAL OF PAINT WITH LEAD
13284N 09/99 REMOVAL AND DISPOSAL OF POLYCHLORINATED BIPHENYLS (PCBs)
13285N 09/99 REMOVAL AND DISPOSAL OF PCB CONTAMINATED SOILS
13286N 01/01 HANDLING OF LIGHTING BALLASTS AND LAMPS CONTAINING PCBs AND MERCURY

13287N 09/99 RADON MITIGATION
13290A 03/89 COMPOSTING TOILET
13401N 09/99 FLOW MEASURING EQUIPMENT [POTABLE WATER] [SEWAGE TREATMENT PLANT]
13405A 01/03 PROCESS CONTROL
13420A 11/97 SELF-ACTING BLAST VALVES
13451A 06/02 POWER MONITORING SYSTEM
13600A 08/01 SOLAR WATER HEATING EQUIPMENT
13610N 09/99 SOLAR LIQUID FLAT PLATE COLLECTORS
13702N 09/99 BASIC INTRUSION DETECTION SYSTEMS (IDS)
13703N 09/99 COMMERCIAL INTRUSION DETECTION SYSTEMS (IDS)
13720A 05/98 ELECTRONIC SECURITY SYSTEM
13721A 03/97 SMALL INTRUSION DETECTION SYSTEM
13798 09/99 DURESS SIGNAL SYSTEM [FOR BRIG FACILITIES]
13799 09/99 WATCHTOUR SYSTEM [FOR BRIG FACILITIES]
13801A 12/01 UTILITY MONITORING AND CONTROL SYSTEM (UMCS)
13814A 04/89 BUILDING PREPARATION FOR ENERGY MONITORING AND CONTROL SYSTEMS (EMCS)
13820A 04/01 MULTI-BUILDING EXPANSION OF ENERGY MONITORING AND CONTROL SYSTEMS
13850A 02/02 FIRE DETECTION AND ALARM SYSTEM, DIRECT CURRENT LOOP
13851A 02/02 FIRE DETECTION AND ALARM SYSTEM, ADDRESSABLE
13851N 09/99 EXTERIOR FIRE ALARM SYSTEM, CLOSED CIRCUIT TELEGRAPHIC TYPE
13852A 11/97 FIRE ALARM REPORTING SYSTEM, RADIO TYPE
13852N 09/99 INTERIOR FIRE DETECTION AND ALARM SYSTEM
13853A 11/97 CENTRAL FIRE ALARM SYSTEM, DIGITAL ALARM COMMUNICATOR TYPE
13853N 09/99 FIRE ALARM SYSTEM, RADIO TYPE
13854N 08/00 FIRE ALARM REPORTING SYSTEMS - DIGITAL COMMUNICATORS
13855N 03/00 ANALOG/ADDRESSABLE INTERIOR FIRE ALARM SYSTEM
13856N 04/02 CARBON MONOXIDE DETECTORS
13920A 12/01 FIRE PUMPS
13920N 09/99 FIRE PUMPS
13930A 12/02 WET PIPE SPRINKLER SYSTEM, FIRE PROTECTION
13930N 09/99 WET-PIPE FIRE SUPPRESSION SPRINKLERS
13931N 09/99 FIRE EXTINGUISHING SPRINKLER SYSTEMS (RESIDENTIAL)
13935A 04/02 DRY PIPE SPRINKLER SYSTEM, FIRE PROTECTION
13935N 09/99 DRY-PIPE FIRE SPRINKLER SYSTEMS
13945A 04/02 PREACTION AND DELUGE SPRINKLER SYSTEMS, FIRE PROTECTION
13945N 09/99 [DELUGE] [PREACTION] FIRE SPRINKLER SYSTEMS
13955A 12/01 AQUEOUS FILM-FORMING FOAM (AFFF) FIRE PROTECTION SYSTEM
13956N 09/99 FOAM FIRE EXTINGUISHING FOR AIRCRAFT HANGARS
13957N 09/99 FOAM FIRE EXTINGUISHING FOR FUEL TANK PROTECTION
13958N 09/99 FOAM FIRE EXTINGUISHING FOR HAZ/FLAM MATERIAL FACILITY
13961N 09/99 CARBON DIOXIDE FIRE EXTINGUISHING (HIGH PRESSURE)
13962N 09/99 CARBON DIOXIDE FIRE EXTINGUISHING (LOW PRESSURE)
13965A 12/01 WET CHEMICAL FIRE EXTINGUISHING SYSTEM
13966N 09/00 HALON 1301 FIRE EXTINGUISHING
13971N 09/00 WET CHEMICAL FIRE EXTINGUISHING FOR KITCHEN CABINET
13975N 02/01 STANDPIPE SYSTEMS

DIVISION 14 - CONVEYING SYSTEMS
(UFGS UNLESS DESIGNATED OTHERWISE)

14210A 08/01 ELEVATORS, ELECTRIC

14210N 03/01 ELECTRIC TRACTION ELEVATORS
14211A 01/94 ELEVATORS, ELECTRIC, FOR CIVIL WORKS
14240 09/02 HYDRAULIC ELEVATORS
14534N 09/99 MONORAILS WITH MANUAL HOIST
14535N 09/99 MONORAILS WITH AIR MOTOR POWERED HOIST
14580A 08/01 PNEUMATIC-TUBE SYSTEM
14601A 04/94 CRANES, BRIDGE & GANTRY, TOP RUNNING, 30-TON MAXIMUM CAPACITY
14602A 11/02 CRANES, SINGLE-GIRDER BRIDGE, MONORAIL AND JIB
14606N 11/02 PORTAL CRANE TRACK INSTALLATION
14622N 09/99 MONORAILS WITH ELECTRIC POWERED HOISTS
14630A 05/93 OVERHEAD ELECTRIC CRANES
14636N 09/99 CRANES, OVERHEAD ELECTRIC, TOP RUNNING (UNDER 20,000 POUNDS)
14637N 09/99 CRANES, OVERHEAD ELECTRIC, UNDERRUNNING (UNDER 20,000 POUNDS)

DIVISION 15 - MECHANICAL
(UFGS UNLESS DESIGNATED OTHERWISE)

15005A 12/01 SPEED REDUCERS FOR STORM WATER PUMPS
15010A 12/01 HYDRAULIC POWER SYSTEMS FOR CIVIL WORKS STRUCTURES
15050N 09/01 BASIC MECHANICAL MATERIALS AND METHODS
15070A 01/02 SEISMIC PROTECTION FOR MECHANICAL EQUIPMENT
15070N 09/99 MECHANICAL SOUND, VIBRATION, AND SEISMIC CONTROL
15080A 07/02 THERMAL INSULATION FOR MECHANICAL SYSTEMS
15080N 09/99 MECHANICAL INSULATION
15081N 09/99 EXTERIOR PIPING INSULATION
15131A 02/02 VERTICAL PUMPS, AXIAL-FLOW AND MIXED-FLOW IMPELLER-TYPE
15132A 12/02 SUBMERSIBLE PUMP, AXIAL-FLOW AND MIXED-FLOW TYPE
15133A 12/01 DIESEL/NATURAL GAS FUELED ENGINE PUMP DRIVES
15181A 12/01 CHILLED AND CONDENSER WATER PIPING AND ACCESSORIES
15181N 09/99 CHILLED, CONDENSER, OR DUAL SERVICE WATER PIPING
15182A 12/01 REFRIGERANT PIPING
15182N 09/99 REFRIGERANT PIPING
15183N 09/99 STEAM SYSTEM AND TERMINAL UNITS
15184N 09/99 [HIGH][MEDIUM] TEMPERATURE WATER SYSTEM WITHIN BUILDINGS
15185N 09/99 LOW TEMPERATURE WATER [LTW] HEATING SYSTEM
15190A 12/01 GAS PIPING SYSTEMS
15191N 09/99 FIBERGLASS REINFORCED PLASTIC (FRP) PIPING (FOR PETROLEUM)
15192N 09/99 FUEL OIL PIPING
15193N 09/99 GASOLINE/DIESEL DISPENSING SYSTEMS
15194N 10/01 AVIATION FUEL DISTRIBUTION AND DISPENSING
15195N 09/99 NATURAL GAS AND LIQUID PETROLEUM PIPING
15200A 03/02 PIPELINES, LIQUID PROCESS PIPING
15211N 09/99 LOW PRESSURE COMPRESSED AIR PIPING (NON-BREATHING AIR TYPE)
15212N 09/99 HIGH AND MEDIUM PRESSURE COMPRESSED AIR PIPING
15213N 09/99 LARGE CENTRIFUGAL AIR COMPRESSORS (OVER 200 HP)
15214N 09/99 LARGE NONLUBRICATED RECIPROCATING AIR COMPRESSORS (OVER 300 HP)
15215N 09/99 NONLUBRICATED ROTARY SCREW AIR COMPRESSORS (100 HP AND LARGER)
15216N 09/99 WELDING PRESSURE PIPING
15217N 09/99 MEDICAL GAS AND VACUUM PIPING

15400A 12/02 PLUMBING, GENERAL PURPOSE
15400N 06/01 PLUMBING SYSTEMS
15405A 04/02 PLUMBING, HOSPITAL
15411N 09/99 HOSPITAL PLUMBING FIXTURES
15495A 12/01 HYDRAULIC FLUID POWER SYSTEMS
15500A 12/01 DESICCANT COOLING SYSTEMS
15501N 09/99 STEAM HEATING PLANT WATERTUBE (SHOP ASSEMBLED) COAL/OIL OR COAL
15502N 09/99 STEAM HEATING PLANT WATERTUBE (FIELD ERECTED) COAL/OIL OR COAL
15511N 09/99 WATER-TUBE BOILERS, OIL/GAS OR OIL
15514N 09/99 LOW PRESSURE WATER HEATING BOILERS (UNDER 800,000 BTU/HR OUTPUT)
15515N 09/99 LOW PRESSURE WATER HEATING BOILERS (OVER 800,000 BTU/HR OUTPUT)
15516N 09/99 STEAM BOILERS AND EQUIPMENT (500,000 - 18,000,000 BTU/HR)
15517N 09/99 STEAM BOILERS AND EQUIPMENT (18,000,000 - 60,000,000 BTU/HR)
15532N 09/99 WARM AIR HEATING SYSTEMS
15555A 02/02 CENTRAL HIGH TEMPERATURE WATER (HTW) GENERATING PLANT AND AUXILIARIES
15556A 02/02 FORCED HOT WATER HEATING SYSTEMS USING WATER AND STEAM HEAT EXCHANGERS
15559A 03/89 CENTRAL STEAM-GENERATING SYSTEM, COAL-FIRED
15561A 09/01 CENTRAL STEAM GENERATING SYSTEM - COMBINATION GAS AND OIL FIRED
15562A 07/01 HEATING AND UTILITIES SYSTEMS, CENTRAL STEAM
15565A 12/01 HEATING SYSTEM; GAS-FIRED HEATERS
15566A 12/01 WARM AIR HEATING SYSTEMS
15569A 12/02 WATER AND STEAM HEATING; OIL, GAS OR BOTH; UP TO 20 MBTUH
15601N 05/01 CENTRAL REFRIGERATION EQUIPMENT FOR AIR CONDITIONING
15602N 09/99 REFRIGERATION EQUIPMENT FOR COLD STORAGE
15620A 06/02 LIQUID CHILLERS
15645A 12/01 COOLING TOWER
15652A 12/01 COLD STORAGE REFRIGERATION SYSTEMS
15690A 12/01 EVAPORATIVE COOLING SYSTEMS
15700A 12/01 UNITARY HEATING AND COOLING EQUIPMENT
15702N 2/02 COMPUTER ROOM AIR CONDITIONING UNITS
15720N 09/99 AIR HANDLING UNITS
15721N 09/99 EVAPORATIVE COOLING SYSTEM
15730N 09/99 UNITARY AIR CONDITIONING EQUIPMENT
15741 11/99 VERTICAL GROUND-COUPLED HEAT EXCHANGE SYSTEMS (VGCHES)
15741N 08/00 WATER SOURCE HEAT PUMP SYSTEMS
15751N 09/99 DESICCANT DEHUMIDIFICATION EQUIPMENT
15760N 09/99 TERMINAL HEATING AND COOLING UNITS
15768N 09/99 ELECTRIC SPACE HEATING EQUIPMENT
15801N 09/99 INDUSTRIAL VENTILATION AND EXHAUST
15810N 09/99 DUCTWORK AND DUCTWORK ACCESSORIES
15845A 12/01 ENERGY RECOVERY SYSTEMS
15846A 12/01 HEAT RECOVERY BOILERS
15848A 12/01 THERMAL ENERGY STORAGE UNITS: ICE-ON-COIL
15860A 12/01 CHEMICAL, BIOLOGICAL, AND RADIOLOGICAL (CBR) AIR FILTRATION SYSTEM
15861N 09/99 MECHANICAL CYCLONE DUST COLLECTOR OF FLUE GAS PARTICULATES
15862N 09/99 ELECTROSTATIC DUST COLLECTOR OF FLUE GAS PARTICULATES

15863N 09/99 FABRIC FILTER DUST COLLECTOR OF FLY ASH PARTICLES IN FLUE GAS
15864N 09/99 DUST AND GAS COLLECTOR, DRY SCRUBBER AND FABRIC FILTER TYPE
15895 08/02 AIR SUPPLY, DISTRIBUTION, VENTILATION, AND EXHAUST SYSTEM
15901N 02/02 SPACE TEMPERATURE CONTROL SYSTEMS
15910N 09/01 DIRECT DIGITAL CONTROL SYSTEMS
15940A 12/01 OVERHEAD VEHICLE TAILPIPE [AND WELDING FUME] EXHAUST REMOVAL SYSTEM(S)
15950A 12/01 HEATING, VENTILATING AND AIR CONDITIONING (HVAC) CONTROL SYSTEMS
15950N 08/00 HVAC TESTING/ADJUSTING/BALANCING
15951A 12/01 DIRECT DIGITAL CONTROL FOR HVAC (CEGS)
15951N 09/99 TESTING INDUSTRIAL VENTILATION SYSTEMS
15990A 12/02 TESTING, ADJUSTING, AND BALANCING OF HVAC SYSTEMS
15995A 12/01 COMMISSIONING OF HVAC SYSTEMS

DIVISION 16 - ELECTRICAL
(UFGS UNLESS DESIGNATED OTHERWISE)

16050N 02/01 BASIC ELECTRICAL MATERIALS AND METHODS
16070A 04/99 SEISMIC PROTECTION FOR ELECTRICAL EQUIPMENT
16081N 01/01 APPARATUS INSPECTION AND TESTING
16113A 11/92 UNDERFLOOR DUCT SYSTEM
16115A 11/92 UNDERFLOOR RACEWAY SYSTEM (CELLULAR STEEL FLOOR)
16120A 11/91 INSULATED WIRE AND CABLE
16130N 09/99 UNDERFLOOR RACEWAY SYSTEM
16145N 09/99 480 V PIER POWER OUTLET ASSEMBLIES
16221A 11/92 ELECTRIC MOTORS, 3-PHASE VERTICAL INDUCTION TYPE
16222A 09/93 ELECTRIC MOTORS, 3-PHASE VERTICAL SYNCHRONOUS TYPE
16230N 09/99 DIESEL-ELECTRIC GENERATORS (DESIGN 1) 500 TO 2,500 KW – PRIME DUTY
16231N 09/99 DIESEL-ELECTRIC GENERATORS (DESIGN 2) 2,501 KW OR LARGER - PRIME DUTY
16232N 09/00 STANDBY DIESEL-ELECTRIC GENERATORS (DESIGN 3) 301 TO 1,000 KW
16233N 09/99 STANDBY DIESEL-ELECTRIC GENERATORS (DESIGN 4) 1,001 KW OR LARGER
16234N 09/99 DIESEL ENGINE-GENERATOR SETS - PRIME AND STANDBY - 10 TO 500 KW
16236N 09/00 MOTOR-GENERATOR SETS, 400 HERTZ (HZ)
16237N 01/01 SINGLE OPERATION GENERATOR SETS
16261N 09/99 VARIABLE FREQUENCY DRIVE SYSTEMS UNDER 600 VOLTS
16262N 09/99 INSTALLATION OF UNINTERRUPTIBLE POWER SUPPLY (UPS) SYSTEM
16263A 06/02 DIESEL-GENERATOR SET STATIONARY 100-2500 KW, WITH AUXILIARIES
16264A 06/02 DIESEL-GENERATOR SET, STATIONARY 15-300 KW, STANDBY APPLICATIONS
16265A 09/98 UNINTERRUPTIBLE POWER SUPPLY (UPS) SYSTEM ABOVE 15 KVA CAPACITY
16268N 03/01 400-HERTZ (HZ) SOLID STATE FREQUENCY CONVERTER
16272N 01/01 THREE-PHASE PAD-MOUNTED TRANSFORMERS
16273N 01/01 SINGLE-PHASE PAD-MOUNTED TRANSFORMERS
16280N 09/99 RADIO FREQUENCY INTERFERENCE POWER LINE FILTERS
16301N 02/02 OVERHEAD TRANSMISSION AND DISTRIBUTION

16302N 09/99 UNDERGROUND TRANSMISSION AND DISTRIBUTION
16311A 05/01 MAIN ELECTRIC SUPPLY STATION AND SUBSTATION
16341N 03/01 SF6 INSULATED PAD-MOUNTED SWITCHGEAR
16360N 06/02 SECONDARY UNIT SUBSTATIONS
16361N 02/01 PRIMARY UNIT SUBSTATION
16370A 07/02 ELECTRICAL DISTRIBUTION SYSTEM, AERIAL
16375A 02/02 ELECTRICAL DISTRIBUTION SYSTEM, UNDERGROUND
16402N 02/02 INTERIOR DISTRIBUTION SYSTEM
16403A 08/95 MOTOR CONTROL CENTERS, SWITCHBOARDS AND PANELBOARDS
16404A 11/92 480-VOLT STATION SERVICE SWITCHGEAR AND TRANSFORMERS
16407N 09/99 MARINA ELECTRICAL WORK
16410A 07/01 AUTOMATIC TRANSFER SWITCH AND BY-PASS/ISOLATION SWITCH
16410N 08/00 AUTOMATIC TRANSFER SWITCHES
16415A 06/02 ELECTRICAL WORK, INTERIOR
16442N 03/01 SWITCHBOARDS AND SWITCHGEAR
16475A 08/02 COORDINATED POWER SYSTEM PROTECTION
16510N 02/02 INTERIOR LIGHTING
16520N 02/02 EXTERIOR LIGHTING
16522N 03/01 AIRFIELD LIGHTING
16525A 09/92 HELIPAD LIGHTING AND VISUAL NAVIGATION AIDS
16526A 08/01 AIRFIELD AND HELIPORT LIGHTING AND VISUAL NAVIGATION AIDS
16528A 05/01 EXTERIOR LIGHTING INCLUDING SECURITY AND CCTV APPLICATIONS
16553N 09/99 SURGICAL LIGHTING FIXTURES
16665A 07/89 STATIC ELECTRICITY PROTECTION SYSTEM
16710A 09/02 PREMISES DISTRIBUTION SYSTEM
16710N 02/02 STRUCTURED TELECOMMUNICATIONS CABLING AND PATHWAY SYSTEM
16711A 11/01 TELEPHONE SYSTEM, OUTSIDE PLANT
16713N 03/01 FIBER OPTIC (FO) OUTSIDE PLANT (OSP) MEDIA
16720N 02/02 ADMINISTRATIVE TELEPHONE EQUIPMENT, INSIDE PLANT
16721 10/02 INTERCOMMUNICATION SYSTEM
16721N 02/02 TELEPHONE DISTRIBUTION SYSTEM, OUTSIDE PLANT
16722N 09/99 PIER TELEPHONE DISTRIBUTION SYSTEMS
16725N 09/00 NURSE CALL SYSTEM
16730A 11/02 NURSE CALL TONE-VISUAL (NCTV) SYSTEM
16731A 11/02 NURSE CALL AUDIO-VISUAL (NCAV) SYSTEM
16751A 08/00 CLOSED CIRCUIT TELEVISION SYSTEMS
16755A 04/01 RADIO PAGING SYSTEM
16768A 08/94 FIBER OPTIC DATA TRANSMISSION SYSTEM
16770 04/02 RADIO AND PUBLIC ADDRESS SYSTEMS
16782N 09/99 [MASTER] [COMMUNITY] ANTENNA TELEVISION SYSTEM
16783N 03/01 COMMUNITY ANTENNA TELEVISION (CATV) SYSTEMS
16785A 10/01 TELEVISION SIGNAL RECEPTION SYSTEM
16790A 03/89 STAND-ALONE ONE-WAY RADIO CONTROL SYSTEM
16792A 12/96 WIRE LINE DATA TRANSMISSION SYSTEM
16794A 04/91 COAXIAL CABLE DATA TRANSMISSION MEDIA
16797A 07/94 ONE-WAY FM RADIO CONTROL/UTILITY MONITORING & CONTROL SYSTEM (UMCS)
16798A 03/89 TWO-WAY RADIO DATA TRANSMISSION SYSTEM
16815A 10/01 CABLE TELEVISION PREMISES DISTRIBUTION SYSTEM
16822N 09/99 INTERCOMMUNICATION SYSTEM
16905A 09/93 ELECTRICAL EQUIPMENT FOR GATE HOIST
-- End of Master Table of Contents --

This page was intentionally left blank for duplex printing.

SECTION TABLE OF CONTENTS

DIVISION 01 - GENERAL REQUIREMENTS

SECTION 01356

STORM WATER POLLUTION PREVENTION MEASURES

11/01

PART 1 GENERAL

1.1 REFERENCES
1.2 GENERAL
1.3 SUBMITTALS
1.4 EROSION AND SEDIMENT CONTROLS
1.4.1 Stabilization Practices
1.4.1.1 Permanent Seeding
1.4.1.2 Temporary Seeding and Mulching
1.4.1.3 Erosion Control Blankets
1.4.2 Temporary Structural Practices
1.4.2.1 Silt Fences
1.4.2.2 Storm Drain Inlet Protection
1.4.2.3 Culvert Inlet Protection
1.4.2.4 Rock Check Dams
1.4.2.5 Stone Construction Entrance
1.4.2.6 Sediment Trap
1.4.2.7 Diversion Dikes

PART 2 PRODUCTS

2.1 COMPONENTS FOR SILT FENCES
2.1.1 Geotextile
2.1.2 Silt Fence Stakes and Posts
2.1.3 Mill Certificate or Affidavit
2.1.4 Identification Storage and Handling
2.1.5 Support Mesh
2.2 Erosion Control Blankets
2.3 COMPONENTS FOR SEDIMENT TRAP
2.4 COMPONENTS FOR INLET PROTECTION
2.5 STONE CONSTRUCTION ENTRANCE
2.6 ROCK CHECK DAMS
2.7 GEOTEXTILES

PART 3 EXECUTION

3.1 INSTALLATION OF SILT FENCES
3.2 Sediment Trap
3.3 Stone Construction Entrance
3.4 MAINTENANCE
3.4.1 Silt Fences
3.4.2 Storm Drain Inlet Protection
3.4.3 Rock Check Dams
3.4.4 Stone Construction Entrance
3.4.5 Sediment Traps
3.4.6 Diversion Dikes

3.5 INSPECTIONS
3.5.1 General
3.5.2 Inspections Details
3.5.3 Inspection Reports

-- End of Section Table of Contents --

SECTION 01356

STORM WATER POLLUTION PREVENTION MEASURES
11/01

PART 1 GENERAL

1.1 REFERENCES

The publications listed below form a part of this specification to the extent referenced. The publications are referred to in the text by basic designation only.

AMERICAN SOCIETY FOR TESTING AND MATERIALS (ASTM)

ASTM D 448	(1998) Sizes of Aggregate for Road and Bridge Construction
ASTM D 4873	(2001) Identification, Storage, and Handling of Geosynthetic Rolls and Samples

AMERICAN ASSOCIATION OF STATE HIGHWAY AND TRANSPORTATION OFFICIALS (AASHTO)

AASHTO M 288	(2000) Geotextile for Highway Applications

1.2 GENERAL

[The Contractor shall implement the storm water pollution prevention measures specified in this section in a manner which will meet the requirements of Section 01355 ENVIRONMENTAL PROTECTION, and the requirements of the National Pollution Discharge Elimination System (NPDES) permit specified in Section 01556 (FEDERAL FACILITIES COLORADO) NPDES PERMIT REQUIREMENTS FOR STORM WATER DISCHARGES FROM CONSTRUCTION SITES.] [The Contractor shall install and maintain stabilization and structural best management practices which will minimize erosion and sediment pollution from the construction site to the extent attainable. The Contractor shall be responsible for selection of appropriate best management practices as specified herein.]

1.3 SUBMITTALS

Government approval is required for submittals with a "G" designation; submittals not haveing a "G" designation are for information only. When used, a designation following the "G" designation identifies the office that will review the submittal for the Government. The following shall be submitted in accordance with Section 01330 SUBMITTAL PROCEDURES:

SD-07 Certificates

Mill Certificate or Affidavit

1.4 EROSION AND SEDIMENT CONTROLS

The controls and measures required by the Contractor are described [in the Storm Water Pollution Prevention Plans (SWPPP) attached to Section 01556

(FEDERAL FACILITIES COLORADO) NPDES PERMIT REQUIREMENTS FOR STORM WATER DISCHARGES FROM CONSTRUCTION SITES][below].

1.4.1 Stabilization Practices

The stabilization practices to be implemented may include temporary seeding, mulching, sod stabilization, vegetative buffer strips, erosion control blankets, [protection of trees,] preservation of mature vegetation, etc. On his daily CQC Report, the Contractor shall record the dates when the major grading activities occur; when construction activities temporarily or permanently cease on a portion of the site; and when stabilization practices are initiated.

1.4.1.1 Permanent Seeding

Disturbed areas of the site where construction activities permanently ceases shall be stabilized with permanent seeding no more than 14 days after the construction activity ceases, except as follows. When the initiation of permanent seeding is stopped due to snow cover or arid conditions, permanent seeding shall be initiated as soon as practicable.

1.4.1.2 Temporary Seeding and Mulching

Areas where construction activities will temporarily cease for more than one year shall be temporarily seeded and mulched. Disturbed areas of the site where construction activities temporarily cease for more than 21 days and less than one year shall be stabilized with either temporary seeding and mulching or mulching not more than 14 days after construction activity ceases, except as follows. When the initiation of temporary stabilization measures is stopped due to snow cover or arid conditions, stabilization measures shall be initiated as soon as practicable.

1.4.1.3 Erosion Control Blankets

Erosion control blanket may be installed on steep slopes and in drainage swales and ditches to protect finished grades from erosion.

1.4.2 Temporary Structural Practices

Temporary structural practices shall be implemented to divert flows from exposed soils, temporarily store flows, or otherwise limit runoff and the discharge of pollutants from exposed areas of the site to the degree attainable. Temporary structural practices shall be implemented in a timely manner during the construction process to minimize erosion and sediment runoff. Temporary structural practices shall include but not be limited to the following devices. [Location and details of installation and construction are shown on the drawings.]

1.4.2.1 Silt Fences

The Contractor shall provide silt fences as a temporary structural practice to minimize erosion and sediment runoff. Silt fences shall be properly installed to effectively retain sediment immediately after completing each phase of work where erosion would occur in the form of sheet and rill erosion (e.g. clearing and grubbing, excavation, embankment, and grading). Silt fence barriers shall be installed along the down slope boundary of all disturbed areas prior to begining land-distrubing activities in those areas. Silt fence barriers may be installed across ditches or swales but not where the drainage area is greater than 1 acre. Removal of silt fence

barriers shall be approved by the Contracting Officer.

1.4.2.2 Storm Drain Inlet Protection

Storm drain inlet protection shall be installed at each new and existing inlet which receives storm runoff from disturbed areas of 1 acre of less. The protection at each inlet shall be removed once the disturbed area has been finally stabilized.

1.4.2.3 Culvert Inlet Protection

Culvert inlet protection shall be installed at all culverts with a drainage area of 1 acre or less.

1.4.2.4 Rock Check Dams

Rock check dams may be used to reduce erosion of temporary or permanent ditches or swales. Type 1 rock check dams shall be used when the upstream drainage area is less than 2 acres. Type 2 rock check dams shall be used when the upstream area is 2 to 10 acres.

1.4.2.5 Stone Construction Entrance

A stone construction entrance shall be constructed wherever traffic will be leaving the construction site and move directly onto a paved road. Stone construction entrances shall be removed after the site has been finally stabilized.

1.4.2.6 Sediment Trap

Sediment traps may be constructed below disturbed areas where the total contributing drainage area is less than 3 acres. Sediment traps, when used, should be constructed prior to disturbance of upslope areas. Sediment traps must have an initial storage volume of 134 cubic yards per acre of drainage area, half of which shall be in the form of a permanent pool or wet storage to provide a stable settling medium. The remaining half shall be in the form of a drawdown or dry storage which will provide extended settling time during less frequent, larger storm events.

1.4.2.7 Diversion Dikes

Diversion dikes may be constructed to divert runoff from upslope drainage areas away from unprotected disturbed areas and slopes to a stabiilized outlet or to divert sediment-laden runoff from a disturbed area to a sediment-trapping facility such as a sediment trap or sediment basin. Diversion dikes shall have a maximum channel slope of 2 percent and shall be adequately compacted to prevent failure. The minimum height measured from the top of the dike to the bottom of the channel shall be 18 inches. The minimum base width shall be 6 feet and the minimum top width shall be 2 feet. The Contractor shall ensure that the diversion dikes are not damaged by construction operations or traffic.

PART 2 PRODUCTS

2.1 COMPONENTS FOR SILT FENCES

2.1.1 Geotextile

The geotextile shall comply with the requirements of AASHTO M 288 for

temporary silt fence.

2.1.2 Silt Fence Stakes and Posts

The Contractor may use either wooden stakes or steel posts for fence construction. Wooden stakes utilized for silt fence construction, shall have a minimum cross section of 2 inches by 2 inches when oak is used and 4 inches by 4 inches when pine is used, and shall have a minimum length of 3 feet. Steel posts (standard "U" or "T" section) utilized for silt fence construction, shall have a minimum weight of 1.33 pounds per linear foot and a minimum length of 5 feet.

2.1.3 Mill Certificate or Affidavit

A mill certificate or affidavit shall be provided attesting that the geotextile and factory seams meet chemical, physical, and manufacturing requirements specified above. The mill certificate or affidavit shall specify the actual Minimum Average Roll Values and shall identify the fabric supplied by roll identification numbers. The Contractor shall submit a mill certificate or affidavit signed by a legally authorized official from the company manufacturing the geotextile.

2.1.4 Identification Storage and Handling

Geotextile shall be identified, stored and handled in accordance with ASTM D 4873.

2.1.5 Support Mesh

Support mesh shall be 14-1/2 gage or heavier steel wire with a mesh spacing of 6 by 6 inch or a prefabricated polymeric mesh of equivalent strength.

2.2 Erosion Control Blankets

Erosion control blankets shall be a machine-produced mat with a biodegradable agricultural straw matrix (approximately 0.50 lb/sq yd) and photodegradable netting on each side. The blanket shall be sewn together with degradable thread. Installation staple patterns shall be clearly marked on the erosion control blanket with environmentally safe paint.

2.3 COMPONENTS FOR SEDIMENT TRAP

Coarse aggregate shall conform to ASTM D 448, Size 3, 357, or 5. Minor variations from the gradations specified will be permitted. Stone for riprap shall consist of field stone or rough unhewn quarry stone of approximately rectangular shape. The stone shall be hard and angular and of such quality that it will not disintegrate on exposure to water or weathering. The specific gravity of individual stones shall be at least 2.5. Riprap stones shall weigh between 50 and 150 pounds each, except that approximately 10 percent may weigh 50 pounds or less. At least 60 percent shall weight more than 100 pounds. Geotextile shall conform to paragraph GEOTEXTILES.

2.4 COMPONENTS FOR INLET PROTECTION

Aggregates for gravel filter should be sized to get the greatest amount of filtering action possible (by using smaller-sized stone), while not creating significant ponding problems.

2.5 STONE CONSTRUCTION ENTRANCE

Aggregate for construction entrance shall conform to ASTM D 448, Size 1. Minor variations from the gradation specified will be permitted. Geotextile shall conform to paragraph GEOTEXTILES.

2.6 ROCK CHECK DAMS

Coarse aggregate shall conform to ASTM D 448 size number 1 or approved equal. Riprap shall consist of field stone or rough unhewn quarry stone of approximately rectangular shape. Riprap shall be hard and angular. The specific gravity of individual stones shall be at least 2.5. Concrete rubble may be used provided it has a density of at least 150 pcf. Individual stones shall have a weight of 50 to 150 lbs except that a maximum of 10 percent of stone may weigh less than 50 lbs. At least 60 percent of stones shall weigh more than 100 lbs.

2.7 GEOTEXTILES

Geotextile for other than silt fence shall comply with the requirements of AASHTO M 288 for a separation geotextile.

PART 3 EXECUTION

3.1 INSTALLATION OF SILT FENCES

Silt fences shall extend a minimum of 16 inches above the ground surface and shall not exceed 34 inches above the ground surface. Filter fabric shall be from a continuous roll cut to the length of the barrier to avoid the use of joints. When joints are unavoidable, filter fabric shall be spliced together at a support post, with a minimum 6 inch overlap, and securely sealed. A trench shall be excavated approximately 6 inches wide and 8 inches deep on the upslope side of the location of the silt fence. The 6-inch by 8-inch trench shall be backfilled and the soil compacted over the filter fabric. Silt fences shall be removed upon approval by the Contracting Officer.

3.2 Sediment Trap

The area under the embankment shall be cleared, grubbed, and stripped of any vegetation and root mat. Fill material for the embankment shall be placed in accordance with Section 02300 EARTHWORK. A geotextile shall be placed between the riprap and subgrade.

3.3 Stone Construction Entrance

The area of the entrance shall be cleared of all vegatation, roots, and other objectionable material. The aggregate layer shall have a minimum total thickness of 6 inches. A geotextile shall be placed beneath aggregate for the full width and length of the entrance. A minimum of 3 inches of the aggregate shall be placed in a cut section to provide stability and secure the geotextile. If conditions on the site are such that the majority of the mud is not removed by the vehicles traveling over the stone, then the tires of the vehicles shall be washed before entering the road. Wash water must be carried away from the entrance to an approved settling area to remove sediment. A wash rack may also be installed for washing of vehicles.

3.4 MAINTENANCE

The Contractor shall maintain the temporary and permanent vegetation, erosion and sediment control measures, and other protective measures in good and effective operating condition by performing routine inspections to determine condition and effectiveness, by restoration of destroyed vegetative cover, and by repair of erosion and sediment control measures and other protective measures. [Maintenance of protective measures shall conform to the requirements in the SWPPP.] [The following procedures shall be followed to maintain the protective measures.]

3.4.1 Silt Fences

Silt fences shall be inspected in accordance with paragraph INSPECTIONS. Any required repairs shall be made promptly. Close attention shall be paid to the repair of damaged silt fence resulting from end runs and undercutting. Should the fabric on a silt fence decompose or become ineffective, and the barrier is still necessary, the fabric shall be replaced promptly. Sediment deposits shall be removed when deposits reach one-third of the height of the barrier. When a silt fence is no longer required, it shall be removed. The immediate area occupied by the fence and any sediment deposits shall be shaped to an acceptable grade. The areas disturbed by this shaping shall be seeded in accordance with Section 02921 SEEDING.

3.4.2 Storm Drain Inlet Protection

Inlet protection structures shall be inspected after each rainfall and repairs made as needed. Sediment shall be removed and the trap restored to its original dimensions when the sediment has accumulated to one half the design depth.

3.4.3 Rock Check Dams

Check dams should be checked for sediment after each runoff-producing sotrm event. Sediment should be removed when it reaches one half the original height of the measure.

3.4.4 Stone Construction Entrance

Stone construction entrances shall be maintained in a conditon which will prevent tracking or flow of mud onto paved roads. This may require periodic top dressing with additional stone or the washing and reworking of existing stone as conditions demand and repair and/or cleanout of any structures used to trap sediment. The use of water trucks to remove materials dropped, washed, or tracked onto roadways will not be permitted under any circumstances.

3.4.5 Sediment Traps

Sediment shall be removed and the trap restored to its original dimensions when the sediment has accumulated to one half the design volume of the wet storage. Filter stone shall be regularly checked to ensure that filtration performance is maintained. Stone choked with sediment shall be removed and cleaned or replaced. The structure should be inspected regularly to ensure that it is structurally sound and has not been damaged by erosion or construction equipement. The height of the stone outlet should be inspected to ensure that its center is a least 1 foot below the top of the embankment.

3.4.6 Diversion Dikes

Diversion dikes shall be inspected in accordance with paragraph INSPECTIONS. Close attention shall be paid to the repair of damaged diversion dikes and necessary repairs shall be accomplished promptly. When diversion dikes are no longer required, they shall be shaped to an acceptable grade. The areas disturbed by this shaping shall be seeded in accordance with Section 02921 SEEDING.

3.5 INSPECTIONS

3.5.1 General

The Contractor shall inspect disturbed areas of the construction site, areas used for storage of materials that are exposed to precipitation that have not been finally stabilized, stabilization practices, structural practices, other controls, and area where vehicles exit the site at least once every seven (7) calendar days and within 24 hours of the end of any storm that produces 0.5 inches or more rainfall at the site. Where sites have been finally stabilized, such inspection shall be conducted at least once every month. [Inspection of protective measures shall conform to the requirements in the SWPPP.]

3.5.2 Inspections Details

Disturbed areas and areas used for material storage that are exposed to precipitation shall be inspected for evidence of, or the potential for, pollutants entering the drainage system. Erosion and sediment control measures shall be observed to ensure that they are operating correctly. Discharge locations or points shall be inspected to ascertain whether erosion control measures are effective in preventing significant impacts to receiving waters. Locations where vehicles exit the site shall be inspected for evidence of offsite sediment tracking.

3.5.3 Inspection Reports

For each inspection conducted, the Contractor shall prepare a report summarizing the scope of the inspection, name(s) of personnel making the inspection, the date(s) of the inspection, major observations relating to the implementation of the storm water pollution prevention measures, maintenance performed, and actions taken. The report shall be furnished to the Contracting Officer within 24 hours of the inspection as a part of the Contractor's daily CQC REPORT.

-- End of Section --

This page was intentionally left blank for duplex printing.

SECTION TABLE OF CONTENTS

DIVISION 02 - SITE WORK

SECTION 02560

(COLORADO) PAVEMENTS FOR SMALL PROJECTS

05/02

PART 1 GENERAL

1.1 REFERENCES
1.2 MEASUREMENT AND PAYMENT
1.3 MODIFICATION TO THE CDOT
1.4 DEFINITIONS
1.4.1 Degree of Compaction
1.5 SUBMITTALS
1.6 SAMPLING AND TESTING
1.7 APPROVAL OF MATERIAL
1.8 WEATHER LIMITATIONS
1.8.1 Hot-Mix Asphalt Pavement
1.8.2 Bituminous Prime and Tack Coat
1.8.3 Portland Cement Concrete Pavement
1.8.4 Base Course, Subbase Course, Aggregate Surface Course
1.9 PLANT, EQUIPMENT, AND TOOLS

PART 2 PRODUCTS

2.1 HOT-MIX ASPHALT PAVEMENT
2.1.1 JMF Requirements
2.1.2 Adjustments to Field JMF
2.1.3 Asphalt Cement Binder
2.2 BITUMINOUS TACK AND PRIME COAT
2.2.1 Bituminous Prime Coat
2.2.2 Bituminous Tack Coat
2.3 PORTLAND CEMENT CONCRETE PAVEMENT
2.3.1 Portland Cement Concrete
2.3.2 Welded Steel Wire Fabric
2.3.3 Dowels Bars and Tie Bars
2.3.4 Epoxy Resin
2.4 CONCRETE SIDEWALK AND CURB AND GUTTER
2.4.1 General
2.4.2 Sidewalks
2.4.3 Curb and Gutter
2.5 CURING MATERIALS
2.6 JOINT FILLER, BACKER ROD AND SEALANT
2.7 AGGREGATE BASE COURSE (ABC)
2.8 RIGID PAVEMENT BASE COURSE
2.9 SUBBASE COURSE
2.10 AGGREGATE SURFACE COURSE
2.11 INITIAL TESTS

PART 3 EXECUTION

3.1 PAVEMENT REMOVAL

3.2 HOT-MIX ASPHALT PAVEMENT
3.2.1 Contractor Quality Control
3.2.1.1 Asphalt Content
3.2.1.2 Gradation
3.2.1.3 Temperatures
3.2.1.4 Aggregate Moisture
3.2.1.5 Moisture Content of Mixture
3.2.1.6 Laboratory Air Voids, Marshall Stability and Flow
3.2.2 Acceptability of Work
3.2.2.1 Sampling Pavements
3.2.2.2 Laboratory Air Voids
3.2.2.3 In-place Density
3.2.2.4 Surface Smoothness
3.3 BITUMINOUS TACK AND PRIME COAT
3.3.1 Bituminous Tack Coat
3.3.2 Bituminous Prime Coat
3.4 PORTLAND CEMENT CONCRETE PAVEMENT
3.4.1 Spreading
3.4.2 Placing Reinforcing Steel
3.4.3 Joints
3.4.4 Contractor Quality Control
3.4.4.1 Air Content Testing
3.4.4.2 Slump Testing
3.4.4.3 Temperature
3.4.4.4 Concrete Strength Testing
3.4.5 Acceptability of Work
3.4.5.1 Strength Requirements
3.4.5.2 Surface Smoothness Requirements
3.4.5.3 Edge Slump Testing and Conformance
3.4.5.4 Thickness Determination
3.5 CONCRETE SIDEWALK AND CURB AND GUTTER
3.5.1 Sidewalks
3.5.2 Curb and Gutter
3.5.3 Curing and Protection
3.5.3.1 Mat Method
3.5.3.2 Impervious Sheeting Method
3.5.3.3 Membrane Curing Method
3.6 AGGREGATE COURSES
3.6.1 Acceptability of Work
3.6.1.1 In-Place Tests
3.6.1.2 Thickness
3.6.1.3 Smoothness

-- End of Section Table of Contents --

SECTION 02560

(COLORADO) PAVEMENTS FOR SMALL PROJECTS
05/02

PART 1 GENERAL

1.1 REFERENCES

The publications listed below form a part of this specification to the extent referenced. The publications are referred to in the text by basic designation only.

STATE DEPARTMENT OF HIGHWAYS, DIVISION OF HIGHWAYS, STATE OF COLORADO (CDOT)

CDOT	Standard Specifications for Road and Bridge Construction, 1999 Edition

AMERICAN ASSOCIATION OF STATE HIGHWAY AND TRANSPORTATION OFFICIALS (AASHTO)

AASHTO T 180	(1997) Moisture-Density Relations of Soils Using a 4.54-kg (10-lb) Rammer and an 457 mm (18-in) Drop
AASHTO T 193	(1999) The California Bearing Ratio
AASHTO TP53	(1998; Interim 1999) Determining Asphalt Content of Hot Mix Asphalt by the Ignition Method

AMERICAN SOCIETY FOR TESTING AND MATERIALS (ASTM)

ASTM A 185	(2001) Steel Welded Wire Fabric, Plain, for Concrete Reinforcement
ASTM C 31/C 31M	(2000e1) Making and Curing Concrete Test Specimens in the Field
ASTM C 39/C 39M	(2001) Compressive Strength of Cylindrical Concrete Specimens
ASTM C 88	(1999a) Soundness of Aggregates by Use of Sodium Sulfate or Magnesium Sulfate
ASTM C 136	(2001) Sieve Analysis of Fine and Coarse Aggregates
ASTM C 143/C 143M	(2000) Slump of Hydraulic Cement Concrete
ASTM C 150	(2002) Portland Cement
ASTM C 192/C 192M	(2000) Making and Curing Concrete Test Specimens in the Laboratory

ASTM C 231	(1997e1) Air Content of Freshly Mixed Concrete by the Pressure Method
ASTM C 566	(1997) Total Evaporable Moisture Content of Aggregate by Drying
ASTM C 881	(1999) Epoxy-Resin-Base Bonding Systems for Concrete
ASTM D 946	(1982; R 1999) Penetration-Graded Asphalt Cement for Use in Pavement Construction
ASTM D 1461	(1985; R 2001) Moisture or Volatile Distillates in Bituminous Paving Mixtures
ASTM D 1557	(2000) Laboratory Compaction Characteristics of Soils Using Modified Effort (56,000 ft-lbf/ft (2,700 kN-m/m))
ASTM D 2041	(2000) Theoretical Maximum Specific Gravity and Density of Bituminous Paving Mixtures
ASTM D 2172	(1995) Quantitative Extraction of Bitumen from Bituminous Paving Mixtures
ASTM D 2726	(2000) Bulk Specific Gravity and Density of Non-Absorptive Compacted Bituminous Mixture
ASTM D 2950	(1991; R 1997) Density of Bituminous Concrete in Place by Nuclear Method
ASTM D 3203	(1994; R 2000) Percent Air Voids in Compacted Dense and Open Bituminous Paving Mixtures
ASTM D 3405	(1997) Joint Sealants, Hot-Applied, for Concrete and Asphalt Pavements
ASTM D 3666	(2001) Minimum Requirements for Agencies Testing and Inspecting Road and Paving Materials
ASTM D 4125	(1994) Asphalt Content of Bituminous Mixtures by the Nuclear Method
ASTM D 4867/D 4867M	(1996) Effect of Moisture on Asphalt Concrete Paving Mixtures
ASTM D 5444	(1998) Mechanical Size Analysis of Extracted Aggregate
ASTM D 5893	(1996) Cold Applied, Single Component Chemically Curing Silicon Joint Sealant for Portland Cement Concrete Pavement
ASTM D 6307	(1998) Asphalt Content of Hot Mix Asphalt by Ignition Method

CORPS OF ENGINEERS (COE) HAND BOOK FOR CONCRETE AND CEMENT

CRD-C 525	(1989) Corps of Engineers Test Method for Evaluation of Hot-Applied Joint Sealants for Bubbling Due to Heating

ASPHALT INSTITUTE (AI)

AI MS-2	(1994) Mix Design Methods for Asphalt Concrete and Other Hot-Mix Types

1.2 MEASUREMENT AND PAYMENT

Section "MEASUREMENTS AND PAYMENT" of the CDOT shall not apply.

1.3 MODIFICATION TO THE CDOT

Reference to "Engineer" and "Department" in the CDOT shall mean the Contracting Officer or Representative.

1.4 DEFINITIONS

For the purposes of this specification, the following definitions apply.

1.4.1 Degree of Compaction

Degree of compaction of [aggregate base course,] [rigid pavement base course,] [subbase course,] [and aggregate surface course] shall be expressed as a percentage of the maximum density obtained by the test procedure presented in either ASTM D 1557 or AASHTO T 180, Method D. The maximum density shall be determined in accordance with ASTM D 1557 if the material gradation contains less than 30 percent retained on the 3/4 inch sieve or AASHTO T 180 if the material gradation contains more than 30 percent retained on the 3/4 inch sieve. In this specification, degree of compaction shall be a percentage of laboratory maximum density.

1.5 SUBMITTALS

Government approval is required for submittals with a "G" designation; submittals not having a "G" designation are for information only. When used, a designation following the "G" designation identifies the office that will review the submittal for the Government. The following shall be submitted in accordance with Section 01330 SUBMITTAL PROCEDURES:

SD-03 Product Data

Plant, Equipment, and Tools

Job Mix Formula; G-ED.

Proposed JMF.

Mixture Proportions; G-ED.

The report of the Contractor's mixture proportioning studies showing the proportions of all ingredients and supporting information on aggregate and other materials that will be used in the manufacture of concrete, at least 14 days prior to commencing concrete placing operations.

SD-06 Test Reports

Initial Tests; G-RE.

Certified copies of test results for approval not less than 20 days before material is required for the work.

Contractor Quality Control; G-RE.

The Contractor shall submit all QC test results to the Contracting Officer on a daily basis as the tests are performed.

Acceptability of Work; G-RE.

The Contractor shall submit all test results to the Contracting Officer on a daily basis as the tests are performed.

SD-07 Certificates

Asphalt Cement Binder; G-RE.

Copies of certified test data.

Bituminous Tack and Prime Coat; G-RE.

Copies of certified test data.

SD-08 Manufacturer's Instructions

Manufacturer's Recommendations; G-RE

Where installation procedures, or any part thereof, are required to be in accordance with the manufacturer's recommendations, printed copies of these recommendations, 20 days prior to use on the project. Installation of the material will not be allowed until the recommendations are received. Failure to furnish these recommendations can be cause for rejection of the material.

1.6 SAMPLING AND TESTING

Sampling and testing shall be the responsibility of the Contractor. Sampling and testing shall be performed by a testing laboratory approved in accordance with Section 01451 CONTRACTOR QUALITY CONTROL. Work requiring testing will not be permitted until the testing laboratory has been inspected and approved. The materials shall be tested to establish compliance with the specified requirements; testing shall be performed at the specified frequency. The Contracting Officer may specify the time and location of the tests.

1.7 APPROVAL OF MATERIAL

The source of the material for aggregate base course, subbase course, rigid pavement base course, and aggregate surface course shall be selected 30 days prior to the time the material will be required in the work. Tentative approval of material will be based on initial test results. Final approval of the materials will be based on sieve analysis, liquid limit, and plasticity index tests performed on samples taken from the completed and fully compacted base and subbase course.

1.8 WEATHER LIMITATIONS

1.8.1 Hot-Mix Asphalt Pavement

The hot-mix asphalt pavement shall not be placed upon a wet surface or when the surface temperature of the underlying course is less than specified in Table 1. The temperature requirements may be waived by the Contracting Officer, if requested; however, all other requirements, including compaction, shall be met.

Table 1. Surface Temperature Limitations of Underlying Course

Mat Thickness, inches	Degrees F
3 or greater	40
Less than 3	45

1.8.2 Bituminous Prime and Tack Coat

Bituminous coat shall be applied only when the surface to receive the bituminous coat is dry. Bituminous coat shall be applied only when the atmospheric temperature in the shade is 50 degrees F or above and when the temperature has not been below 35 degrees F for the 12 hours prior to application.

1.8.3 Portland Cement Concrete Pavement

Limitations on the placing of concrete shall conform to Section 412.09, "Limitations of Placing Concrete" of the CDOT.

1.8.4 Base Course, Subbase Course, Aggregate Surface Course

Construction of aggregate base course, subbase course, rigid pavement base course, and aggregate surface course shall be done when the atmospheric temperature is above 35 degrees F. When the temperature falls below 35 degrees F, the Contractor shall protect all completed areas by approved methods against detrimental effects of freezing. Completed areas damaged by freezing, rainfall, or other weather conditions shall be corrected to meet specified requirements.

1.9 PLANT, EQUIPMENT, AND TOOLS

All plant, equipment, and tools used in the performance of the work shall be subject to approval before the work is started and shall be maintained in satisfactory working condition at all times. The equipment shall be adequate and shall have the capability of producing pavements meeting the requirements as set forth herein.

PART 2 PRODUCTS

2.1 HOT-MIX ASPHALT PAVEMENT

Bituminous wearing course shall conform to the requirements specified in the CDOT, Section 401, "PLANT MIX PAVEMENTS- GENERAL, and Section 403, "HOT BITUMINOUS PAVEMENT", except as modified herein. The aggregate shall be Grading [S] [SX]. Coarse aggregate shall meet the following additional requirements: Percentage of loss shall not exceed 18 after 5 cycles when

performed in accordance with ASTM C 88, using magnesium sulfate. The Contractor shall develop the mix design. The laboratory used to develop the job mix formula (JMF) shall meet the requirements of ASTM D 3666. A certification signed by the manager of the laboratory stating that it meets these requirements or clearly listing all deficiencies shall be submitted to the Contracting Officer prior to the start of construction. The asphalt mix shall be dense-graded and composed of a mixture of well-graded aggregate, mineral filler if required, and asphalt material. The hot-mix asphalt shall be designed using Marshall method of mix design contained in AI MS-2 and the criteria shown in Table 3. If the Tensile Strength Ratio (TSR) of the composite mixture, as determined by ASTM D 4867/D 4867M is less than 75, the aggregates shall be rejected or the asphalt mixture treated with an approved anti-stripping agent. The amount of anti-stripping agent added shall be sufficient to produce a TSR of not less than 75. If an antistrip agent is required, it shall be provided by the Contractor at no additional cost. The hot-mix asphalt pavement shall not contain more than 15 percent reclaimed asphalt pavement.

2.1.1 JMF Requirements

The job mix formula shall be submitted in writing by the Contractor for approval at least 14 days prior to the start of the test section and shall include as a minimum:

a. Percent passing each sieve size.

b. Percent of asphalt cement.

c. Percent of each aggregate and mineral filler to be used.

d. Asphalt viscosity grade or performance grade.

e. Number of blows of hammer per side of molded specimen.

f. Laboratory mixing temperature.

g. Lab compaction temperature.

h. Temperature-viscosity relationship of the asphalt cement.

i. Plot of the combined gradation on the 0.45 power gradation chart, stating the nominal maximum size.

j. Graphical plots of stability, flow, air voids, voids in the mineral aggregate, and unit weight versus asphalt content as shown in AI MS-2.

k. Specific gravity and absorption of each aggregate.

l. Percent natural sand.

m. Percent particles with 2 or more fractured faces (in coarse aggregate).

n. Fine aggregate angularity.

o. Percent flat or elongated particles (in coarse aggregate).

p. Tensile Strength Ratio(TSR).

q. Antistrip agent (if required) and amount.

r. List of all modifiers and amount.

s. Percentage and properties (asphalt content, binder properties, and aggregate properties) of reclaimed asphalt pavement (RAP) if RAP is used.

Table 2. Marshall Design Criteria

Test Property	75 Blow Mix	50 Blow Mix
Stability, pounds minimum	*1800	*1000
Flow, 0.01 inch	8-16	8-18
Air voids, percent	3-5	3-5
Percent Voids in mineral aggregate VMA, (minimum)		
Grading S	13.0	13.0
Grading SX	14.0	14.0
TSR, minimum percent	75	75

* This is a minimum requirement. The average during construction shall be significantly higher than this number to ensure compliance with the specifications.
** Calculate VMA in accordance with AI MS-2, based on ASTM D 2726 bulk specific gravity for the aggregate.

2.1.2 Adjustments to Field JMF

The Laboratory JMF for each mixture shall be in effect until a new formula is approved in writing by the Contracting Officer. Should a change in sources of any materials be made, a new laboratory jmf design shall be performed and a new JMF approved before the new material is used.

2.1.3 Asphalt Cement Binder

Asphalt cement shall conform to the requirements specified in Section 702, "Bituminous Materials" of the CDOT. Asphalt cement binder shall be either viscosity grade AC-10 or Performance Grade (PG) 58-28 or ASTM D 946 penetration grade 85-100. Test data indicating grade certification shall be provided by the supplier at the time of delivery of each load to the mix plant. Copies of these certifications shall be submitted to the Contracting Officer. The supplier is defined as the last source of any modification to the binder.

2.2 BITUMINOUS TACK AND PRIME COAT

Test data indicating grade certification shall be provided by the supplier. Copies of these certifications shall be submitted to the Contracting Officer.

2.2.1 Bituminous Prime Coat

Bituminous prime coat shall conform to the requirements specified in Section 407, Prime Coat, Tack Coat, and Rejuvenating Agent", and Section 702, "BITUMINOUS MATERIALS", of the CDOT. Bituminous materials shall be liquid asphalt, designation MC-30, or MC-70 at the Contractor's option, except that only MC-30 shall be used on dense graded base courses if MC-70 does not adequately penetrate the base course material. In lieu of cut-back asphalt, the Contractor may use cationic emulsified asphalt, designation CSS-l or CSS-lh.

2.2.2 Bituminous Tack Coat

Bituminous tack coat shall conform to the requirements specified in Section 407, "Prime Coat, Tack Coat, and Rejuvenating Agent" of the CDOT. Bituminous material shall be emulsified asphalt designation SS-1 or SS-1h, or cationic emulsified asphalt designation CSS-1 or CSS-1h.

2.3 PORTLAND CEMENT CONCRETE PAVEMENT

2.3.1 Portland Cement Concrete

Portland cement concrete shall conform to the requirements specified in Section 412, "Portland Cement Concrete Pavement", and Section 601 "Structural Concrete" of the CDOT. Proportioning [and required 28-day field compressive strength] of the mix shall conform to the requirements of Class "P" concrete[, except that the required 28-day field compressive strength strength shall be [5000 psi]. The coarse aggregate shall have a maximum nominal size of 1-1/2 inches. The maximum allowable slump of the concrete shall be 3 inchesfor pavement constructed with fixed forms. For slipformed pavement, the maximum allowable slump shall be 1-1/4 inches. The water-cement ratio shall not exceed 0.45. The air content of the concrete by volume shall be maintained by the Contractor at 6.0 percent plus or minus 1.0 percent. The Contractor shall submit design mixture proportions, laboratory trial mix, aggregate data, and 28-day compressive strength test results in accordance with Section 601.05, "Proportioning" of the CDOT.

2.3.2 Welded Steel Wire Fabric

Welded steel wire fabric shall conform to ASTM A 185.

2.3.3 Dowels Bars and Tie Bars

Dowel bars and tie bars shall conform to Section 709.03 "Dowel Bars and Tie Bars" of the CDOT.

2.3.4 Epoxy Resin

Epoxy resin materials for embedding dowels shall be two-component materials conforming to the requirements of ASTM C 881, Type IV, Grade 3. Class shall be appropriate for each application temperature to be encountered.

2.4 CONCRETE SIDEWALK AND CURB AND GUTTER

2.4.1 General

Portland cement concrete shall conform to Section 601, "STRUCTURAL CONCRETE", of the CDOT, except as modified herein. Concrete shall be Class

B or D. Coarse aggregate shall meet Number 57 or 67 gradation. The portland cement shall be Type I or II, and meet the optional chemical requirements for low alkali when tested in accordance with ASTM C 150.

2.4.2 Sidewalks

Portland cement concrete sidewalk shall conform to the requirements as specified in Section 608, "SIDEWALKS AND BIKEWAYS" of the CDOT.

2.4.3 Curb and Gutter

Portland cement concrete curb and gutter shall conform to the requirements as specified in Section 609, "CURB AND GUTTER", of the CDOT.

2.5 CURING MATERIALS

Curing materials for portland cement concrete pavement and sidewalk shall conform to Section 711.01 "Curing Materials" of the CDOT. Liquid membrane-forming compound shall be white pigmented type 2.

2.6 JOINT FILLER, BACKER ROD AND SEALANT

Preformed expansion joint filler and backer rod shall conform to Section 705.01, "Joint Fillers" of the CDOT. Cold-applied silicone joint sealant shall conform to ASTM D 5893. Cold-applied silicone sealant for sidewalks shall be gray or stone in color. Hot-applied joint sealant shall conform to ASTM D 3405 and CRD-C 525.

2.7 AGGREGATE BASE COURSE (ABC)

Aggregate base course aggregate shall conform to the requirements specified in Section 304, "AGGREGATE BASE COURSE" and Section 703.03 "AGGREGATE FOR BASES", of the CDOT, except as modified herein. Aggregate base course shall be CDOT Class 4 except as otherwise specified herein. The portion retained on the No. 4 sieve shall be known as coarse aggregate; that portion passing the No. 4 sieve shall be known as fine aggregate. Aggregates shall be angular particles of uniform density. Coarse aggregate shall be crushed gravel, crushed stone, crushed recycled concrete, or crushed slag. Fine aggregate shall consist of screenings, angular sand, crushed recycled concrete fines, or other finely divided mineral matter processed or naturally combined with the coarse aggregate. The amount of flat and elongated particles shall not exceed 30 percent. A flat particle is one having a ratio of width to thickness greater than 3; an elongated particle is one having a ratio of length to width greater than 3. In the portion retained on each sieve specified, the crushed aggregates shall contain at least 50 percent by weight of crushed pieces having two or more freshly fractured faces with the area of each face being at least equal to 75 percent of the smallest midsectional area of the piece. When two fractures are contiguous, the angle between planes of the fractures must be at least 30 degrees in order to count as two fractured faces. Crushed gravel shall be manufactured from gravel particles 50 percent of which, by weight, are retained on the maximum size sieve. The percentage of loss shall not exceed 18 after 5 cycles when performed in accordance with ASTM C 88, using magnesium sulfate. The portion of the material passing the No. 40 sieve shall have liquid limit not greater than 25 and a plasticity index not greater than 5. When tested for gradation, the percentage passing the No. 200 sieve shall not exceed 10 percent and the No. 635 sieve shall not exceed 3.0 percent.

2.8 RIGID PAVEMENT BASE COURSE

Rigid pavement base course aggregate shall conform to the requirements specified in Section 304, "AGGREGATE BASE COURSE" and Section 703.03 "AGGREGATE FOR BASES", of the CDOT, except as modified herein. Rigid pavement base course shall be CDOT Class 5 except as otherwise specified herein. The aggregate shall meet the following additional properties; the aggregate shall be a crushed quarry rock, [crushed gravel, crushed screenings, sand or a combination thereof]. The percentage of loss shall not exceed 18 after 5 cycles when performed in accordance with ASTM C 88, using magnesium sulfate. The portion of the material passing the No. 40 sieve shall have liquid limit not greater than 25 and a plasticity index not greater than 5. When tested for gradation, the percentage passing the No. 200 sieve shall be between 9 percent and 15 percent. The No. 635 sieve shall not exceed 6.0 percent.

2.9 SUBBASE COURSE

Subbase course aggregate shall conform to the requirements specified in Section 304, "AGGREGATE BASE COURSE" and Section 703.03 "AGGREGATE FOR BASES", of the CDOT, except as modified herein. Subbase courses shall be CDOT Class 5 except as otherwise specified herein. The aggregate shall meet the following additional properties; the aggregate shall be a crushed quarry rock, [crushed gravel, crushed screenings, sand or a combination thereof]. The subbase course shall have a minimum California Bearing Ratio (CBR) of 50. The CBR shall be determined in accordance with AASHTO T l93. The percentage of loss shall not exceed 18 after 5 cycles when performed in accordance with ASTM C 88, using magnesium sulfate. The portion of the material passing the No. 40 sieve shall have liquid limit not greater than 25 and a plasticity index not greater than 5. When tested for gradation, the percentage passing the No. 200 sieve shall be between 9 percent and 15 percent. The No. 635 sieve shall not exceed 6.0 percent.

2.10 AGGREGATE SURFACE COURSE

Crushed aggregate surface course aggregate shall conform to the requirements specified in Section 304, "AGGREGATE BASE COURSE" and Section 703.03 "AGGREGATE FOR BASES", of the CDOT, except as modified herein. Aggregates shall consist of crushed stone or slag, crushed or natural gravel, sand, or other sound, durable materials processed and blended or naturally combined. Aggregates shall be durable and sound, free from lumps and balls of clay, organic matter, objectionable coatings, and other foreign material. The aggregate shall meet the gradation requirement for Class 7. The amount of flat and elongated particles shall not exceed 20 percent. A flat particle is one having a ratio of width to thickness greater than 3; an elongated particle is one having a ratio of length to width greater than 3. The aggregate for the surface course shall contain a minimum 80 percent crushed material. The portion of the material passing the No. 40 sieve shall have a liquid limit not greater than 35 and a plasticity index of 4 to 9.

2.11 INITIAL TESTS

One of each of the following tests shall be performed on the proposed aggregate base course, rigid pavement base course, subbase course and aggregate surface course material prior to commencing construction to demonstrate that the proposed material meets all specified requirements when furnished. If materials from more than one source are going to be utilized, this testing shall be completed for each source.

a. Sieve Analysis including No. 635 size material.

b. Liquid limit and plasticity index.

c. Moisture-density relationship.

d. Wear.

e. Soundness.

PART 3 EXECUTION

3.1 PAVEMENT REMOVAL

Where p.c. concrete and bituminous pavement is to be removed [at the locations shown on the drawings], the pavement shall be sawed with a pre-approved concrete saw so as to leave a straight true edge. P.C. concrete pavement removal shall be accomplished by a full depth double sawcut. The initial sawcut shall be located in the pavement area to be removed and shall be 18 inches from the final sawcut. The pavement material [and existing base course] shall be removed in a manner that will not damage the adjacent in-place pavement to remain [and as shown on the drawings]. The Contractor must demonstrate that his method of removal will not damage adjacent concrete pavement slabs. Any slab found by the Contracting Officer to be damaged by the Contractor's removal methods shall be fully removed and replaced at no cost to the Government. Pavement material from the removal area shall be disposed of [outside the limits of Government controlled land at the Contractor's expense] [at the disposal area indicated on the drawings].

3.2 HOT-MIX ASPHALT PAVEMENT

Hot-mix asphalt pavement wearing course shall be constructed to the requirements specified in the CDOT, Section 401, "PLANT MIX PAVEMENTS-GENERAL" and Section 403, "HOT BITUMINOUS PAVEMENT", except as modified herein.

3.2.1 Contractor Quality Control

A standard lot for all requirements will be equal to 8 hours of production.

3.2.1.1 Asphalt Content

A minimum of two tests to determine asphalt content will be performed per lot by one of the following methods: the extraction method in accordance with ASTM D 2172, Method A or B, the ignition method in accordance with the AASHTO TP53or ASTM D 6307, or the nuclear method in accordance with ASTM D 4125, provided the nuclear gauge is calibrated for the specific mix being used. For the extraction method, the weight of ash, as described in ASTM D 2172, shall be determined as part of the first extraction test performed at the beginning of plant production; and as part of every tenth extraction test performed thereafter, for the duration of plant production. The last weight of ash value obtained shall be used in the calculation of the asphalt content for the mixture.

3.2.1.2 Gradation

Aggregate gradations shall be determined a minimum of twice per lot from

mechanical analysis of recovered aggregate in accordance with ASTM D 5444. When asphalt content is determined by the nuclear method, aggregate gradation shall be determined from hot bin samples on batch plants, or from the cold feed on drum mix plants. For batch plants, aggregates shall be tested in accordance with ASTM C 136 using actual batch weights to determine the combined aggregate gradation of the mixture.

3.2.1.3 Temperatures

Temperatures shall be checked at least four times per lot, at necessary locations, to determine the temperature at the dryer, the asphalt cement in the storage tank, the asphalt mixture at the plant, and the asphalt mixture at the job site.

3.2.1.4 Aggregate Moisture

The moisture content of aggregate used for production shall be determined a minimum of once per lot in accordance with ASTM C 566.

3.2.1.5 Moisture Content of Mixture

The moisture content of the mixture shall be determined at least once per lot in accordance with ASTM D 1461 or an approved alternate procedure.

3.2.1.6 Laboratory Air Voids, Marshall Stability and Flow

Mixture samples shall be taken at least four times per lot and compacted into specimens, using [50] [75] blows per side with the Marshall hammer. After compaction, the laboratory air voids of each specimen shall be determined, as well as the Marshall stability and flow.

3.2.2 Acceptability of Work

The pavement will be accepted on the basis of tests made by the the Contractor or its suppliers, as specified herein. The Government may, at its discretion, make check tests to validate the results of the Contractor's testing.

3.2.2.1 Sampling Pavements

Samples of the finished pavement, shall be obtained by the Contractor. The location of the samples shall be as directed and the cores shall be at least 4 inches in diameter. The samples shall be tested by the Contractor to determine conformance to density. Specimens shall be tested in accordance with the requirements of ASTM D 2726. Three samples shall be taken and tested for each 750 tons or less of bituminous mixture placed each day. A minimum of one core shall be obtained from the longitudinal joint. The Contractor shall fill all cores holes with new material and shall meet the requirements as described herein.

3.2.2.2 Laboratory Air Voids

Laboratory air voids will be calculated by determining the Marshall density of each laboratory compacted specimen using ASTM D 2726 and determining the theoretical maximum density of every other sublot sample using ASTM D 2041. Laboratory air void calculations for each sublot will use the latest theoretical maximum density values obtained, either for that sublot or the previous sublot. The mean absolute deviation of the four laboratory air void contents (one from each sublot) from the JMF air void content will be

evaluated. The mean absolute deviation shall be less than 1.00. All laboratory air void tests will be completed and reported within 24 hours after completion of construction of each lot.

3.2.2.3 In-place Density

Density of the compacted mixture of the bituminous wearing course shall be between 97 and 100 percent (joint density 95 to 100 percent) of the maximum laboratory compacted density. The maximum laboratory compacted specimens shall be determined from the same mixture taken from the plant in accordance with ASTM D 2041. Densities of the in-place compacted mixture may be determined by the nuclear method in accordance with ASTM D 2950 for Contractor quality control purposes. In any event, the basis of acceptance for density shall be determined from the specific gravity method.

3.2.2.4 Surface Smoothness

After the final rolling, but not later than 24 hours after placement, the surface of the pavement in each entire lot shall be tested by the Contractor in such a manner as to reveal all surface irregularities exceeding the tolerances specified below. If any pavement areas are ground, these areas shall be retested immediately after grinding. All testing shall be performed in the presence of the Contracting Officer. Detailed notes of the results of the testing shall be kept and a copy furnished to the Government immediately after each day's testing. The entire area of the pavement shall be tested in both a longitudinal and a transverse direction on parallel lines. The transverse lines shall be 25 feet or less apart, as directed. The longitudinal lines shall be at the centerline of each paving lane for lines less than 20 feet and at the third points for lanes 20 feet or greater. Other areas having obvious deviations shall also be tested. Longitudinal testing lines shall be continuous across all joints. Where drawings show required deviations from a plane surface (crowns, drainage inlets, etc.), the surface shall be finished to meet the approval of the Contracting Officer. The straightedge shall be held in contact with the surface and moved ahead one-half the length of the straightedge for each successive measurement. The amount of surface irregularity shall be determined by placing the freestanding (unleveled) straightedge on the pavement surface and allowing it to rest upon the two highest spots covered by its length, and measuring the maximum gap between the straightedge and the pavement surface in the area between these two high points. The finished surfaces of the pavements shall have no abrupt change of 3/16 inch or more, and all pavements shall be within the tolerances specified in Table 3 when checked with an approved 10 foot straightedge.

Table 3. Straightedge Surface Smoothness--Pavements

Pavement Category	Direction of Testing	Tolerance, inches
All paved areas	Longitudinal	3/16
	Transverse	3/16

3.3 BITUMINOUS TACK AND PRIME COAT

Except as otherwise specified herein, application of bituminous tack and prime coat shall be in accordance with Section 407, PRIME COAT, TACK COAT, AND REJUVENATING AGENT" of the CDOT. Following application of the bituminous material and prior to the application of the pavement, the

bituminous coat shall be allowed to cure and to obtain evaporation of any volatiles or moisture.

3.3.1 Bituminous Tack Coat

Contact surfaces of previously constructed pavement, curbs, manholes, and other structures shall be sprayed with a thin coat of bituminous tack coat. Rate of application shall be not less than 0.05 gallon nor more than 0.15 gallon per square yard.

3.3.2 Bituminous Prime Coat

A prime coat will be required if it will be at least seven days before a the surfacing (Asphalt cement hot mix concrete)layer is constructed on the underlying (base course, etc) compacted material. The type of liquid asphalt and application rate will be as specified herein. The Contractor shall protect the underlying from any damage (water, traffic, etc.) until the surfacing is placed. If the Contractor places the surfacing within seven days, the choice of protection measures or actions to be taken is at the Contractor's option. Damage to the underlying material caused by lack of, or inadequate, protection shall be repaired (recompacted or replaced) by approved methods at no additional cost to the Government. If the Contractor options to use the prime coat, it shall be applied as soon as possible after consolidation of the underlying material. Rate of application shall be not less than 0.15 gallon nor more than 0.40 gallon per square yard. To obtain uniform application of the prime coat on the surface treated at the junction of previous and subsequent applications, building paper shall be spread on the surface for a sufficient distance back from the ends of each application to start and stop the prime coat on the paper. Immediately after application, the building paper shall be removed and destroyed. Prime coat shall be allowed to cure without being disturbed for a period of at least 48 hours or longer, as may be necessary to attain penetration into the treated course.

3.4 PORTLAND CEMENT CONCRETE PAVEMENT

Except as otherwise specified herein, portland cement concrete shall be constructed in accordance with the requirements specified in Section 412, "PORTLAND CEMENT CONCRETE PAVEMENT", and Section 601, "STRUCTURAL CONCRETE" of the CDOT. Tining and stationing of concrete is not required.

3.4.1 Spreading

Spreading shall be by machine or hand method. Hand spreading will be permitted only when approved for odd widths or shapes of slabs, or for placement of separate, isolated slabs during removal and replacement type repair operations, or for lanes 50 feet or less in length. Hand spreading, where permitted, shall be done with shovels; rakes shall not be used. Where the concrete is delivered to the form in truck mixers, suitable chutes may be used, provided windrows cover essentially the entire area within the form. In no case shall dumping of concrete in piles be permitted.

3.4.2 Placing Reinforcing Steel

Reinforcement shall be positioned on suitable chairs securely fastened to the subgrade prior to concrete placement, or may be placed on an initial layer of consolidated concrete, with the subsequent layer placed within 30 minutes of the first layer placement.

3.4.3 Joints

Transverse and longitudinal contraction joints shall be of the weakened plane type and shall be formed by sawing. Joints shall be sealed with hot-applied or cold-applied sealant immediately following curing of the concrete or as soon thereafter as weather conditions permit. Before sealing operations commence, a copy of the Manufacturer's Recommendations pertaining to the storage, heating and application of the sealant shall be submitted to the Contracting Officer.

3.4.4 Contractor Quality Control

The Contractor shall perform the inspection and tests described below at the placement and, based upon the results of these inspections and tests, shall take the action required and submit reports as specified. When, in the opinion of the Contracting Officer, the paving operation is out of control, concrete placement shall cease. The Contractor shall furnish all materials, labor, and facilities required for molding, curing, testing, and protecting test specimens at the site and in the laboratory.

3.4.4.1 Air Content Testing

Air content tests shall be made when test specimens are fabricated. In addition, at least two other tests for air content shall be made on randomly selected batches of each separate concrete mixture produced during each 8-hour period of paving. All air content measurements shall be determined in accordance with ASTM C 231. Whenever air content reaches specified limits, an immediate confirmatory test shall be made. If the second test also shows air content at or exceeding specified limits, an adjustment shall immediately be made in the amount of air-entraining admixture batched to bring air content within specified limits. If the next adjusted batch of concrete is not within specified limits, concrete placement shall be halted until concrete air content is within specified limits.

3.4.4.2 Slump Testing

Slump tests shall be made when test specimens are fabricated. Additional tests shall be made when excessive variation in workability is reported by the placing foreman or Government inspector. All slump tests shall be made in accordance with ASTM C 143/C 143M. Whenever slump approaches the maximum limit, an adjustment shall immediately be made in the batch masses of water and fine aggregate. When a slump result exceeds the specification limit, no further concrete shall be delivered to the paving site until adjustments have been made and slump is again within the limit.

3.4.4.3 Temperature

The temperature of the concrete shall be measured when strength specimens are fabricated.

3.4.4.4 Concrete Strength Testing

Four (4) cylinders from the same batch shall be fabricated, cured and tested for compressive strength, testing two cylinders at 7-day and two cylinders at 28-day age. A strength test shall be the average of the strengths of two cylinders made from the same sample of concrete and tested at 28 days. A minimum of one set of four (4) cylinders shall be

fabricated, cured and tested for each shift of concrete placement nor less than once for each 250 cubic yards of concrete or fraction thereof. All test cylinders shall be 6 by 12 inch cylinders and shall be fabricated in accordance with ASTM C 192/C 192M, using only steel molds, cured in accordance with ASTM C 31/C 31M, and tested in accordance with ASTM C 39/C 39M. Control charts for strength, showing the 7-day and 28-day CQC compressive strengths, and the 28-day required compressive strength, shall be maintained and submitted with weekly CQC Reports.

3.4.5 Acceptability of Work

The pavement will be accepted on the basis of tests made by the Contractor or its suppliers, as specified herein. The Government may, at its discretion, make check tests to validate the results of the Contractor's testing.

3.4.5.1 Strength Requirements

A strength test shall be the average of the strengths of two cylinders made from the same sample of concrete and tested at 28 days. The strength of the concrete will be considered satisfactory so long as the running average of all sets of three consecutive test results equals or exceeds the specified 28-day field compressive strength and no individual test result falls below the specified strength by more than 500 psi. The Contractor shall furnish all materials, labor, and facilities required for molding, curing, testing, and protecting test specimens at the site and in the laboratory.

3.4.5.2 Surface Smoothness Requirements

The surface of the pavement shall be tested with a 3 m (10 foot) straightedge to identify all surface irregularities exceeding the tolerances specified above. The entire area of the pavement shall be tested in both a longitudinal and a transverse direction on parallel lines approximately 15 feet apart. The straightedge shall be held in contact with the surface and moved ahead one-half the length of the straightedge for each successive measurement. The amount of surface irregularity shall be determined by placing the straightedge on the pavement surface and allowing it to rest upon the two highest spots covered by its length and measuring the maximum gap between the straightedge and the pavement surface, in the area between these two high points. The finished surfaces of the pavements shall have no abrupt change of 1/8 inch or more. All pavements shall have a surface smoothness tolerance within 1/4 inch in the transverse and longitudinal direction, except that roads and streets shall have tolerance of 3/16 inchin the longitudinal direction. In areas not meeting the specified limits for surface smoothness, high areas shall be reduced to attain the required smoothness, except as depth is limited below. High areas shall be reduced by grinding the hardened concrete with a surface grinding machine after the concrete is 14 days or more old. The depth of grinding shall not exceed 1/4 inch. All pavement areas requiring surface smoothness corrections in excess of the specified limits, shall be removed and replaced. All areas in which grinding has been performed will be subject to the thickness tolerances specified in paragraph Thickness. Any grinding performed on individual slabs with excessive deficiencies shall be performed at the Contractor's own decision without entitlement to additional compensation if eventual removal of the slab is required.

3.4.5.3 Edge Slump Testing and Conformance

When slip-form paving is used, not more than 15 percent of the total free edge [of any 10 inch or thicker slab] of the slipformed portion of the pavement, shall have an edge slump exceeding 1/4 inch and no slab shall have an edge slump exceeding 3/8 inch. Edge slump shall be determined as above for surface smoothness, at each free edge of each slipformed paving lane constructed. Measurements shall be made at 5 to 15 foot spacings, and as directed. When edge slump exceeding the limits specified above is encountered on either side of the paving lane, additional straightedge measurements shall be made, if required, to define the linear limits of the excessive slump. The concrete for the entire width of the paving lane within these limits of excessive edge slump shall be removed and replaced. Adding concrete or paste to the edge or otherwise manipulating the plastic concrete after the sliding form has passed, or patching the hardened concrete, shall not be used as a method for correcting excessive edge slump.

3.4.5.4 Thickness Determination

The thickness of the pavement shall be determined by the Government on the basis of measurements made on 4 inch diameter cores which shall be drilled by the Contractor, within 7 days after placement of the concrete. Cores shall be drilled at the points directed by the Contracting Officer and there shall be at least one core taken from each separate pavement areas of 4000 sq yd or less. The Contractor shall fill the core holes with an approved non-shrink high strength grout. [For pavements less than 8 inches in thickness, when any core shows a deficiency in thickness greater than 1/4 inch, the pavement area represented by the core shall be removed and replaced by the Contractor at no cost to the Government.] [For pavements greater than 8 inches in thickness, when any core shows a deficiency in thickness greater than 1/2 inch, the pavement area represented by the core shall be removed and replaced by the Contractor at no cost to the Government.]

3.5 CONCRETE SIDEWALK AND CURB AND GUTTER

The subgrade shall be in a moist condition when concrete is placed. The subgrade shall be prepared and protected to produce a subgrade free from frost when the concrete is deposited. Forms shall be cleaned and coated with form oil each time before concrete is placed. Wood forms may, instead, be thoroughly wetted with water before concrete is placed, except that with probable freezing temperatures, oiling is mandatory.

3.5.1 Sidewalks

Except as otherwise specified herein, portland cement concrete sidewalk shall be constructed in accordance with Section 608, "SIDEWALKS AND BIKEWAYS" of the CDOT. Subgrade shall be placed and compacted in conformance with [Section 02300 EARTHWORK] [Section 02210 GRADING]. The subgrade shall be tested for grade and cross section by means of a template extending the full width of the sidewalk and supported between side forms. Finished surfaces shall not vary more than 5/16 inch from the testing edge of a 10-foot straightedge. Permissible deficiency in section thickness will be up to 1/4 inch. All slab edges, including those at formed joints, shall be finished with an edger having a radius of 1/8 inch. Transverse joint shall be edged before brooming, and the brooming shall eliminate the flat surface left by the surface face of the edger. Sidewalk joints shall be constructed to divide the surface into square or rectangular areas. Spacing of transverse and longitudinal contraction and expansion joints shall be as indicated. At the end of the curing period, expansion joints shall be carefully cleaned and filled with cold-applied joint sealant (gray

or stone color) as indicated on the drawings. The joint opening shall be thoroughly cleaned before the sealing material is placed. Sealing material shall not be spilled on exposed surfaces of the concrete. Concrete at the joint shall be surface dry and the atmospheric and concrete temperatures shall be above 50 degrees F at the time of application of joint sealing material.

3.5.2 Curb and Gutter

Except as otherwise specified herein, portland cement concrete curb and gutter shall be constructed in accordance with Section 609, "CURB AND GUTTER", of the CDOT. The subgrade shall be tested for grade and cross section by means of a template extending the full width of the curb and gutter. Concrete shall be placed to the section required in a single lift. Consolidation shall be achieved by using approved mechanical vibrators. Curve shaped gutters shall be finished with a standard curb "mule". Approved slipformed curb and gutter machines may be used in lieu of hand placement. Exposed surfaces shall be floated and finished with a smooth wood float until true to grade and section and uniform in texture. The edges of the gutter and top of the curb shall be rounded with an edging tool to a radius as shown on the drawings. Finished surfaces shall not vary more than 1/4 inch from the testing edge of a 10-foot straightedge. Permissible deficiency in section thickness will be up to 1/4 inch. Contraction joints shall be spaced so that monolithic sections between curb returns will not be less than 5 feet nor greater than 15 feet in length. Contraction joints shall be constructed by means of 1/8 inch thick separators and of a section conforming to the cross section of the curb and gutter. Separators shall be removed as soon as practicable after concrete has set sufficiently to preserve the width and shape of the joint and prior to finishing. Expansion joints shall be formed by means of preformed expansion joint filler material cut and shaped to the cross section of curb and gutter. Expansion joints at least 1/2 inch in width shall be provided at intervals not exceeding 40 feet. Expansion joints and the top 1 inch depth of contraction joints shall be sealed with cold or hot-applied sealant immediately following curing of the concrete or as soon thereafter as weather permits. The joint opening shall be thoroughly cleaned before the sealing material is placed. Sealing material shall not be spilled on exposed surfaces of the concrete. Concrete at the joint shall be surface dry and the atmospheric and concrete temperatures shall be above 50 degrees F at the time of application of joint sealing material. Excess material on exposed surfaces of the concrete shall be removed immediately and concrete surfaces cleaned.

3.5.3 Curing and Protection

Concrete shall be protected against loss of moisture and rapid temperature changes for at least 7 days from the beginning of the curing operation. Concrete shall be cured using one of the following methods

3.5.3.1 Mat Method

The entire exposed surface shall be covered with 2 or more layers of burlap. Mats shall overlap each other at least 6 inches. The mat shall be thoroughly wetted with water prior to placing on concrete surface and shall be kept continuously in a saturated condition and in intimate contact with concrete for not less than 7 days.

3.5.3.2 Impervious Sheeting Method

The entire exposed surface shall be wetted with a fine spray of water and then covered with impervious sheeting material. Sheets shall be laid directly on the concrete surface with the light-colored side up and overlapped 12 inches when a continuous sheet is not used. The curing medium shall not be less than 18 inches wider than the concrete surface to be cured, and shall be securely weighted down by heavy wood planks, or a bank of moist earth placed along edges and laps in the sheets. Sheets shall be satisfactorily repaired or replaced if torn or otherwise damaged during curing. The curing medium shall remain on the concrete surface to be cured for not less than 7 days.

3.5.3.3 Membrane Curing Method

A uniform coating of white-pigmented membrane-curing compound shall be applied to the entire exposed surface of the concrete as specified in Section 412.14, "Curing" of the CDOT.

3.6 AGGREGATE COURSES

Aggregate base course, subbase course, rigid pavement base course, and aggregate surface course shall conform to, and be constructed in accordance with, the requirements specified in Section 304, "AGGREGATE BASE COURSE" and Section 703.03, "AGGREGATE FOR BASES" of the CDOT, except as modified herein. The aggregate base course, subbase course, rigid pavement base course, and aggregate surface course shall be compacted to 100 percent of laboratory maximum density.

3.6.1 Acceptability of Work

The aggregate base course, subbase course, rigid pavement base course, and aggregate surface course will be accepted on the basis of tests made by the Contractor as specified herein. The Government may, at its discretion, make check tests to validate the results of the Contractor's testing.

3.6.1.1 In-Place Tests

One of each of the following tests shall be performed on samples taken from the placed and compacted aggregate course. Samples shall be taken and tested at the rates indicated for each layer of material placed.

a. Density tests shall be performed on every lift of material placed and at a frequency of one set of tests for every 250 square yards, or portion thereof, of completed area.

b. Sieve Analysis [including No. 635 size material] shall be performed on every lift of material placed and at a frequency of one test for every 1000 square meters, or portion thereof, of completed area for every 500 tons, or portion thereof, of material placed.

c. Liquid limit and plasticity index tests shall be performed at the same frequency as the sieve analysis.

3.6.1.2 Thickness

The total compacted thickness of the aggregate course shall be within 1/2 inch of the thickness indicated. Where the measured thickness is more than 1/2 inch deficient, such areas shall be corrected by scarifying, adding new material of proper gradation, reblading, and recompacting as directed. Where the measured thickness is more than 1/2 inch thicker than indicated,

the course shall be considered as conforming to the specified thickness requirements. Average job thickness shall be the average of all thickness measurements taken for the job, but shall be within 1/4 inch of the thickness indicated. The total thickness of the aggregate course shall be measured at intervals in such a manner as to ensure one measurement for each 500 square yards of aggregate course. Measurements shall be made in 3 inch diameter test holes penetrating the aggregate course.

3.6.1.3 Smoothness

The surface of the top layer shall show no deviations in excess of 3/8 inch when tested with a 10 foot straightedge applied parallel with and at right angles to the centerline of the area to be paved. Measurements shall be taken in successive positions parallel to the centerline of the area to be paved. Measurements shall also be taken perpendicular to the centerline at 50 foot intervals. Deviations exceeding this amount shall be corrected by removing material and replacing with new material, or by reworking existing material and compacting it to meet these specifications.

-- End of Section --

SECTION TABLE OF CONTENTS

DIVISION 15 - MECHANICAL

SECTION 15951A

DIRECT DIGITAL CONTROL FOR HVAC

12/01

PART 1 GENERAL

1.1 REFERENCES
1.2 GENERAL REQUIREMENTS
1.2.1 Nameplates, Lens Caps, and Tags
1.2.2 Verification of Dimensions
1.2.3 Drawings
1.2.4 Power-Line Surge Protection
1.2.5 Surge Protection for Transmitter and Control Wiring
1.2.6 System Overall Reliability Requirement
1.2.7 DDC System Network Accessibility
1.2.8 System Accuracy and Display
1.2.8.1 Space Temperature
1.2.8.2 Duct Temperature
1.2.8.3 Outside Air Temperature
1.2.8.4 Water Temperature
1.2.8.5 High Temperature
1.2.8.6 Relative Humidity
1.2.8.7 Pressure
1.2.8.8 Flow
1.2.8.9 KWh and kW Demand
1.2.8.10 Analog Value Input
1.3 SUBMITTALS
1.4 DELIVERY AND STORAGE
1.5 OPERATION MANUAL
1.6 MAINTENANCE AND REPAIR MANUAL
1.7 MAINTENANCE AND SERVICE
1.7.1 Description of Work
1.7.2 Personnel
1.7.3 Scheduled Inspections
1.7.4 Scheduled Work
1.7.5 Emergency Service
1.7.6 Operation
1.7.7 Records and Logs
1.7.8 Work Requests
1.7.9 System Modifications
1.7.10 Software
1.8 FACTORY TESTING
1.8.1 Factory Test Setup

PART 2 PRODUCTS

2.1 GENERAL EQUIPMENT REQUIREMENTS
2.1.1 Electrical and Electronic Devices
2.1.2 Standard Signals
2.1.3 Ambient Temperature Limits

2.1.4 Year 2000 Compliance
2.2 TUBING
2.2.1 Copper
2.2.2 Stainless Steel
2.2.3 Plastic
2.3 WIRING
2.3.1 Terminal Blocks
2.3.2 Control Wiring for 24-Volt Circuits
2.3.3 Wiring for 120-Volt Circuits
2.3.4 Instrumentation Cable
2.3.5 Transformers
2.4 ACTUATORS
2.4.1 Valve Actuators
2.4.2 Positive Positioners
2.5 AUTOMATIC CONTROL VALVES
2.5.1 Butterfly Valve Assembly
2.5.2 Two-Way Valves
2.5.3 Three-Way Valves
2.5.4 Duct-Coil and Terminal-Unit-Coil Valves
2.5.5 Valves for Chilled-Water, Condenser-Water, and Glycol Service
2.5.6 Valves for Hot-Water and Dual Temperature Service
2.5.7 Valves for Steam Service
2.5.8 Valves for High-Temperature Hot-Water Service
2.6 DAMPERS
2.6.1 Damper Assembly
2.6.2 Operating Links
2.6.3 Damper Types
2.6.3.1 Outside Air, Return Air, and Relief Air Dampers
2.6.3.2 Mechanical and Electrical Space Ventilation Dampers
2.6.3.3 Smoke Dampers
2.6.4 Damper End Switches
2.7 SMOKE DETECTORS
2.8 INSTRUMENTATION
2.8.1 Measurements
2.8.2 Temperature Instruments
2.8.2.1 Resistance Temperature Detectors (RTD)
2.8.2.2 Continuous Averaging RTD
2.8.2.3 RTD Transmitter
2.8.3 Relative Humidity Instruments
2.8.4 Electronic Airflow Measurement Stations and Transmitters
2.8.4.1 Stations
2.8.4.2 Transmitters
2.8.5 Pitot Tube Airflow Measurement Stations and Transmitters
2.8.5.1 Stations
2.8.5.2 Transmitters
2.8.6 Differential Pressure Instruments
2.8.7 Thermowells
2.8.8 Sunshields
2.9 THERMOSTATS
2.9.1 Nonmodulating Room Thermostats
2.9.2 Microprocessor Based Room Thermostats
2.9.3 Modulating Room Thermostats
2.9.4 Nonmodulating Capillary Thermostats and Aquastats
2.9.5 Freezestats
2.9.6 Modulating Capillary Thermostats
2.9.7 Fan-Coil Unit Room Thermostats
2.9.7.1 Heating Thermostat
2.9.7.2 Cooling Thermostat
2.9.7.3 Combination Thermostat

2.10 PRESSURE SWITCHES AND SOLENOID VALVES
2.10.1 Pressure Switches
2.10.2 Differential-Pressure Switches
2.10.3 Pneumatic Electric (PE) Switches
2.10.4 Solenoid-Operated Pneumatic (EP) Valves
2.11 INDICATING DEVICES
2.11.1 Thermometers
2.11.1.1 Piping System Thermometers
2.11.1.2 Piping System Thermometer Stems
2.11.1.3 Nonaveraging Air-Duct Thermometers
2.11.1.4 Averaging Air-Duct Thermometers
2.11.1.5 Accuracy
2.11.2 Pressure Gauges
2.11.2.1 Pneumatic Actuator Gauges
2.11.2.2 Air Storage Tank and Filter and Dryer Gauge
2.11.2.3 Hydronic System Gauges
2.11.3 Low Differential Pressure Gauges
2.12 CONTROL DEVICES AND ACCESSORIES
2.12.1 Relays
2.12.2 Current to Pneumatic (IP) Transducers
2.12.3 Joule or Watthour Meters
2.12.4 Joule or Watthour Meters with Demand Register
2.12.5 Joule or Watthour Transducers
2.12.6 Current Sensing Relays
2.12.7 Power-Line Conditioners (PLC)
2.13 COMPRESSED AIR STATIONS
2.13.1 Air Compressor Assembly
2.13.2 Compressed Air Station Specialties
2.13.2.1 Refrigerated Dryer, Filters and, Pressure Regulator
2.13.2.2 Flexible Pipe Connections
2.13.2.3 Vibration Isolation Units
2.13.2.4 Compressed Air Piping
2.14 DIRECT DIGITAL CONTROL (DDC) HARDWARE
2.14.1 Network Control Panel
2.14.1.1 Integral Features
2.14.1.2 Communication Interfaces
2.14.1.3 Memory and Real Time Clock (RTC) Backup
2.14.1.4 Duplex Outlet
2.14.1.5 Locking Enclosures
2.14.1.6 Failure Mode
2.14.2 RIU
2.14.2.1 Integral Features
2.14.2.2 Duplex Outlet
2.14.2.3 Locking Enclosures
2.14.2.4 Failure Mode
2.14.3 Universal Programmable Controller (UPC)
2.14.3.1 Integral Features
2.14.3.2 Communication Interfaces
2.14.3.3 Memory and RTC Backup
2.14.3.4 Specific Requirements
2.14.3.5 Locking Enclosures
2.14.3.6 Failure Mode
2.14.4 Unitary Controller
2.14.4.1 Integral Features
2.14.4.2 Communication Interfaces
2.14.4.3 Specific Requirements
2.14.4.4 Failure Mode
2.14.5 Chiller Control Panel
2.14.6 Boiler Control Panel

2.14.7 I/O Functions
2.14.7.1 DDC Hardware I/O Functions
2.14.7.2 Failure Mode
2.14.8 Portable Workstation/Tester
2.14.9 Central Workstation/Tester
2.14.10 Data Terminal Cabinet (DTC)
2.15 DDC SOFTWARE
2.15.1 Operating System
2.15.1.1 Startup
2.15.1.2 Operating Mode
2.15.1.3 Failure Mode
2.15.2 Functions
2.15.2.1 Analog Monitoring
2.15.2.2 Logic (Virtual) Points
2.15.2.3 State Variables
2.15.2.4 Analog Totalization
2.15.2.5 Energy Totalization
2.15.2.6 Trending
2.15.3 I/O Point Database/Parameter Definition
2.15.4 Alarm Processing
2.15.4.1 Digital Alarms Definition
2.15.4.2 Analog Alarms Definition
2.15.4.3 Pulse Accumulator Alarms Definition
2.15.5 Constraints
2.15.5.1 Equipment Constraints Definitions
2.15.5.2 Constraints Checks
2.15.6 Diagnostics
2.15.7 Summer-Winter Operation Monitoring
2.15.8 Control Sequences and Control Loops
2.15.9 Command Priorities
2.15.10 Resident Application Software
2.15.10.1 Program Inputs and Outputs
2.15.10.2 DDC General Conditions
2.15.10.3 Scheduled Start/Stop Program
2.15.10.4 Optimum Start/Stop Program
2.15.10.5 Day-Night Setback Program
2.15.10.6 Economizer Program I
2.15.10.7 Ventilation/Recirculation and Flush Programs
2.15.10.8 Hot Deck/Cold Deck Temperature Reset Program
2.15.10.9 Reheat Coil Reset Program
2.15.10.10 Heating and Ventilating Unit Program
2.15.10.11 Air Volume Control Program
2.15.10.12 Air Distribution Unitary Controller Software
2.15.10.13 Chiller Selection Program
2.15.10.14 Absorption Chiller Efficiency and Monitoring Program
2.15.10.15 Chilled Water Temperature Reset Program
2.15.10.16 Condenser Water Temperature Reset Program
2.15.10.17 Chiller Demand Limit Program
2.15.10.18 Hot Water OA Reset Program
2.15.10.19 Boiler Monitoring and Control
2.15.10.20 Heat Recovery Boiler Efficiency and Monitoring
2.15.10.21 Hot Water Distribution Program
2.15.10.22 Domestic Hot Water Generator Program
2.15.10.23 Lighting Control Program

PART 3 EXECUTION

3.1 GENERAL INSTALLATION CRITERIA
3.1.1 HVAC Control System

3.1.2 Software Installation
3.1.3 Device Mounting Criteria
3.1.4 Wiring Criteria
3.2 CONTROL SYSTEM INSTALLATION
3.2.1 Damper Actuators
3.2.2 Local Gauges for Actuators
3.2.3 Room Instrument Mounting
3.2.4 Freezestats
3.2.5 Averaging Temperature Sensing Elements
3.2.6 Foundations and Housekeeping Pads
3.2.7 Compressed Air Stations
3.2.8 Duct Static Pressure Sensing Elements and Transmitters
3.2.9 Indication Devices Installed in Piping and Liquid Systems
3.2.10 Tubing
3.2.10.1 Control System Installation
3.2.10.2 Pneumatic Lines In Mechanical/Electrical Spaces
3.2.10.3 Pneumatic Lines External To Mechanical/Electrical Spaces
3.2.10.4 Connection to Liquid and Steam Lines
3.2.10.5 Connection to Ductwork
3.2.10.6 Tubing in Concrete
3.2.10.7 Final Connection to Actuators
3.3 CONTROL SEQUENCES OF OPERATION
3.3.1 General Requirements - HVAC Systems
3.3.1.1 Supply Fan Operating
3.3.1.2 Supply Fan Not Operating
3.3.1.3 Hydronic Heating - Distribution Pump Operating
3.3.1.4 Hydronic Heating - Distribution Pump Not Operating
3.3.2 Perimeter Radiation Control Sequence
3.3.3 Unit Heater and Cabinet Unit Heater
3.3.4 Gas-Fired Infrared Heater
3.3.5 All-Air Small Package Unitary System
3.3.6 Dual Temperature Fan-Coil Unit
3.3.7 Central Plant Hydronic Heating with Steam/Hot Water Converter
3.3.7.1 All Modes
3.3.7.2 Occupied Mode
3.3.7.3 Unoccupied Mode
3.3.8 Single Building Hydronic Heating with Hot Water Boiler
3.3.8.1 All Modes
3.3.8.2 Occupied Mode
3.3.8.3 Unoccupied Mode
3.3.9 Central Plant High-Temperature Hot-Water Hydronic Heating
3.3.9.1 All Modes
3.3.9.2 Occupied Mode
3.3.9.3 Unoccupied Mode
3.3.10 Central Plant Dual-Temperature Hydronic
3.3.10.1 Heating Mode
3.3.10.2 Cooling Mode
3.3.11 Central Plant High-Temperature Hot Water Dual-Temperature Hydronic
3.3.11.1 Heating Mode
3.3.11.2 Cooling Mode
3.3.12 Single Building Dual-Temperature Hydronic
3.3.12.1 Heating Mode
3.3.12.2 Cooling Mode
3.3.13 Heating and Ventilating Unit
3.3.13.1 Occupied, Unoccupied, and Ventilation Delay Operating Modes
3.3.13.2 Outside Air, Return Air, and Relief Air Dampers
3.3.13.3 Supply Fan Control
3.3.13.4 Filter

3.3.13.5 Freeze Protection
3.3.13.6 Space Temperature Control
3.3.13.7 Emergency Fan Shutdown
3.3.14 Multizone with Return Fan
3.3.14.1 Occupied, Unoccupied, and Ventilation Delay Modes of Operation
3.3.14.2 Outside Air, Return Air, and Relief Air Dampers
3.3.14.3 Supply Fan and Return Fan Control
3.3.14.4 Filter
3.3.14.5 Hot-Deck Heating Coil
3.3.14.6 Freeze Protection
3.3.14.7 Cold-Deck Coil
3.3.14.8 Economizer Control
3.3.14.9 Mixed Air Temperature Control
3.3.14.10 Zone Damper Control
3.3.14.11 Emergency Fan Shutdown
3.3.15 Dual-Duct Multizone with Return Fan
3.3.15.1 Occupied, Unoccupied, and Ventilation Delay Modes of Operation
3.3.15.2 Outside Air, Return Air, and Relief Air Dampers
3.3.15.3 Supply Fan and Return Fan Control
3.3.15.4 Filter
3.3.15.5 Hot-Deck Heating Coil
3.3.15.6 Freeze Protection
3.3.15.7 Cold-Deck Cooling Coil
3.3.15.8 Economizer Control
3.3.15.9 Mixed Air Temperature Control
3.3.15.10 Dual-Duct Terminal Box
3.3.15.11 Emergency Fan Shutdown
3.3.16 Bypass Multizone with Return Fan
3.3.16.1 Occupied, Unoccupied, and Ventilation Delay Modes of Operation
3.3.16.2 Outside Air, Return Air, and Relief air Dampers
3.3.16.3 Supply Fan and Return Fan Control
3.3.16.4 Filter
3.3.16.5 Freeze Protection
3.3.16.6 Cold Deck Coil
3.3.16.7 Economizer Control
3.3.16.8 Mixed Air Temperature Control
3.3.16.9 Zone Control
3.3.16.10 Emergency Fan Shutdown
3.3.17 Variable Air Volume Control Sequence without Return Fan
3.3.17.1 Occupied, Unoccupied, and Ventilation Delay Modes of Operation
3.3.17.2 Supply Fan Control
3.3.17.3 Supply Duct Pressurization Control
3.3.17.4 Filters
3.3.17.5 Freeze Protection
3.3.17.6 Cooling Coil
3.3.17.7 Minimum Outside Air Flow Control
3.3.17.8 Economizer and Mixed Air Temperature Control
3.3.17.9 Pressure Independent Terminal VAV Box with Velocity Controller
3.3.17.10 Fan Powered Terminal VAV Box
3.3.17.11 Emergency Fan Shutdown
3.3.18 Variable Air Volume Control Sequence with Return Fan
3.3.18.1 Occupied, Unoccupied, and Ventilation Delay Modes of Operation
3.3.18.2 Fan Control

3.3.18.3 Supply Duct Pressurization Control
3.3.18.4 Return Fan Volume Control
3.3.18.5 Filters
3.3.18.6 Freeze Protection
3.3.18.7 Cooling Coil Control
3.3.18.8 Minimum Outside Air Flow Control
3.3.18.9 Economizer and Mixed Air Temperature Control
3.3.18.10 Pressure Independent Terminal VAV Box with Velocity Controller
3.3.18.11 Fan Powered Terminal VAV Box
3.3.18.12 Emergency Fan Shutdown
3.3.19 Single Zone with Hydronic Heating/Cooling Coils No Return Fan
3.3.19.1 Occupied, Unoccupied, and Ventilation Delay Modes of Operation
3.3.19.2 Outside Air, Return Air, and Relief Air Dampers
3.3.19.3 Supply Fan Control
3.3.19.4 Filter
3.3.19.5 Freeze Protection
3.3.19.6 Hydronic Cooling Coil
3.3.19.7 Economizer Control
3.3.19.8 Space Temperature Sequenced Heating and Cooling Control
3.3.19.9 Emergency Fan Shutdown
3.3.20 Single Zone with Dual-Temperature Coil; No Return Fan
3.3.20.1 Occupied, Unoccupied, and Ventilation Delay Modes of Operation
3.3.20.2 Outside Air, Return Air, and Relief Air Dampers
3.3.20.3 Supply Fan Control
3.3.20.4 Filter
3.3.20.5 Freeze Protection
3.3.20.6 Dual-Temperature Coil Changeover Control
3.3.20.7 Economizer Control
3.3.20.8 Space Temperature Sequenced Heating Control
3.3.20.9 Space Temperature Sequenced Cooling Control
3.3.20.10 Emergency Fan Shutdown
3.3.21 Single Zone Control with Humidity Control; No Return Fan
3.3.21.1 Occupied, Unoccupied, and Ventilation Delay Modes of Operation
3.3.21.2 Outside Air Damper
3.3.21.3 Supply Fan Control
3.3.21.4 Filter
3.3.21.5 Outside Air Preheat-Coil Control
3.3.21.6 Freeze Protection
3.3.21.7 Cooling Coil
3.3.21.8 Humidity Control
3.3.21.9 Constant Temperature Hydronic Heating Control
3.3.21.10 Reheat
3.3.21.11 Emergency Fan Shutdown
3.3.22 Single Zone Hydronic Heating and Direct Expansion Cooling Coil
3.3.22.1 Occupied, Unoccupied, and Ventilation Delay Modes
3.3.22.2 Outside Air, Return Air, and Relief Air Dampers
3.3.22.3 Supply Fan Control
3.3.22.4 Filter
3.3.22.5 Freeze Protection
3.3.22.6 Direct Expansion Cooling Coil
3.3.22.7 Economizer Control
3.3.22.8 Space Temperature Sequenced Heating and Cooling Control
3.3.22.9 Emergency Fan Shutdown
3.4 COMMISSIONING PROCEDURES
3.4.1 Evaluations

3.4.1.1 Item Check
3.4.1.2 Weather Dependent Test Procedures
3.4.1.3 Two-Point Accuracy Check
3.4.1.4 Insertion and Immersion Temperatures
3.4.1.5 Averaging Temperature
3.4.2 Space Temperature Controlled Perimeter Radiation
3.4.3 Unit Heater and Cabinet Unit Heater
3.4.4 Gas-Fired Infrared Heater
3.4.5 All-Air Small Packaged Unitary
3.4.6 Fan Coil Unit
3.4.7 Central Plant Hydronic Heating with Steam/Hot Water Converter
3.4.8 Single Building Hydronic Heating with Hot Water Boiler
3.4.9 Central Plant High Temperature Hot Water Hydronic Heating
3.4.10 Central Plant Dual Temperature Hydronic
3.4.11 Central Plant High Temperature Hot Water Dual Temperature Hydronic
3.4.12 Single Building Dual Temperature Hydronic
3.4.13 Heating and Ventilating Unit
3.4.14 Multizone Control System with Return Fan
3.4.15 Dual-Duct Multizone Control System with Return Fan
3.4.16 Bypass Multizone with Return Fan
3.4.17 Variable Air Volume Control System - Without Return Fan
3.4.18 Variable Air Volume Control System - With Return Fan
3.4.19 Single Zone with Hydronic Heating and Cooling Coils; No Return Fan
3.4.20 Single Zone with Dual Temperature Coil; No Return Fan
3.4.21 Single Zone with Humidification; No Return Fan
3.4.22 Single Zone with Hydronic Heating Direct Expansion Cooling
3.5 BALANCING, COMMISSIONING, AND TESTING
3.5.1 Coordination with HVAC System Balancing
3.5.2 Control System Calibration, Adjustments, and Commissioning
3.5.3 Performance Verification Test
3.5.4 Endurance Test
3.5.5 Posted and Panel Instructions
3.6 TRAINING
3.6.1 Training Course Requirements
3.6.2 Training Course Content

-- End of Section Table of Contents --

SECTION 15951A

DIRECT DIGITAL CONTROL FOR HVAC
12/01

PART 1 GENERAL

1.1 REFERENCES

The publications listed below form a part of this specification to the extent referenced. The publications are referred to in the text by basic designation only.

AIR MOVEMENT AND CONTROL ASSOCIATION (AMCA)

AMCA 500	(11989; Rev994) Test Methods for Louvers, Dampers and Shutters

AMERICAN NATIONAL STANDARDS INSTITUTE (ANSI)

ANSI C12.1	(1995) Code for Electricity Metering

AMERICAN SOCIETY FOR TESTING AND MATERIALS (ASTM)

ASTM A 269	(1996) Seamless and Welded Austenitic Stainless Steel Tubing for General Service
ASTM B 88	(1996) Seamless Copper Water Tube
ASTM B 88M	(1996) Seamless Copper Water Tube (Metric)
ASTM D 1693	(1997a) Environmental Stress-Cracking of Ethylene Plastics
ASTM D 635	(1997) Rate of Burning and/or Extent and Time of Burning of Self-Supporting Plastics in a Horizontal Position

ASME INTERNATIONAL (ASME)

ASME B16.34	(199; B16.34a) Valves - Flanged, Threaded, and Welding End
ASME B40.1	(1991) Gauges - Pressure Indicating Dial Type - Elastic Element
ASME BPVC SEC VIII D1	(1998) Boiler and Pressure Vessel Code; Section VIII, Pressure Vessels Division 1 - Basic Coverage

ELECTRONIC INDUSTRIES ALLIANCE (EIA)

EIA ANSI/EIA/TIA-232-F	(1991) Interface Between Data Technical Equipment and Data Circuit-Terminating Equipment Employing Serial Binary Data Interchange

INSTITUTE OF ELECTRICAL AND ELECTRONICS ENGINEERS (IEEE)

IEEE C62.41	(1991; R 1995) Surge Voltages in Low-Voltage AC Power Circuits
IEEE Std 142	(1991) IEEE Recommended Practice for Grounding of Industrial and Commercial Power Systems

INSTRUMENT SOCIETY OF AMERICA (ISA)

ISA S7.0.01	(1996) Quality Standard for Instrument Air

NATIONAL ELECTRICAL MANUFACTURERS ASSOCIATION (NEMA)

NEMA 250	(1991) Enclosures for Electrical Equipment (1000 Volts Maximum)
NEMA ICS 1	(1993) Industrial Control and Systems
NEMA ST 1	(1988) Specialty Transformers (Except General-Purpose Type)

NATIONAL FIRE PROTECTION ASSOCIATION (NFPA)

NFPA 70	(1999) National Electrical Code
NFPA 90A	(1996) Installation of Air Conditioning and Ventilating Systems

UNDERWRITERS LABORATORIES (UL)

UL 268A	(1998) Smoke Detectors for Duct Application
UL 508	(1993; Rev thru Oct 1997) Industrial Control Equipment
UL 555S	(1996) Leakage Rated Dampers for Use in Smoke Control Systems
UL 94	(1996; Rev thru Jul 1998) Tests for Flammability of Plastic Materials for Parts in Devices and Appliances

1.2 GENERAL REQUIREMENTS

The direct digital control (DDC) shall be a complete system suitable for the heating, ventilating and air-conditioning (HVAC) system.

1.2.1 Nameplates, Lens Caps, and Tags

Nameplates and lens caps bearing legends as shown and tags bearing device-unique identifiers as shown shall have engraved or stamped characters. A plastic or metal tag shall be mechanically attached directly to each device or attached by a metal chain or wire. Each airflow measurement station shall have a tag showing flow rate range for signal output range, duct size, and identifier as shown.

1.2.2 Verification of Dimensions

After becoming familiar with all details of the work, the Contractor shall verify all dimensions in the field, and shall advise the Contracting Officer of any discrepancy before performing any work.

1.2.3 Drawings

Because of the small scale of the drawings, it is not possible to indicate all offsets, fittings, and accessories that may be required. The Contractor shall carefully investigate the mechanical, electrical, and finish conditions that could affect the work to be performed, shall arrange such work accordingly, and shall furnish all work necessary to meet such conditions.

1.2.4 Power-Line Surge Protection

Equipment connected to ac circuits shall be protected from power-line surges. Equipment protection shall meet the requirements of IEEE C62.41. Fuses shall not be used for surge protection.

1.2.5 Surge Protection for Transmitter and Control Wiring

DDC system control-panel equipment shall be protected against surges induced on control and transmitter wiring installed outside and as shown. The equipment protection shall be tested in the normal mode and in the common mode, using the following two waveforms:

a. A 10-microsecond by 1,000-microsecond waveform with a peak voltage of 1,500 volts and a peak current of 60 amperes.

b. An eight microsecond by 20-microsecond waveform with a peak voltage of 1,000 volts and a peak current of 500 amperes.

1.2.6 System Overall Reliability Requirement

The system shall be configured and installed to yield a mean time between failure (MTBF) of at least 40,000 hours. Each DDC controller shall be designed, configured, installed and programmed to provide for stand alone operation with minimal performance degradation on failure of other system components to which it is connected or with which it communicates.

1.2.7 DDC System Network Accessibility

Where the systems to be controlled by the DDC system are located in multiple mechanical rooms, each mechanical room shall have at least one communication port for the portable workstation/tester. DDC controllers shall be located in the same room as the equipment being controlled or in an adjacent space which has direct access to the equipment room.

1.2.8 System Accuracy and Display

The system shall maintain an end-to-end accuracy for one year from sensor to operator's console display for the applications specified and shall display the value as specified. Each temperature shall be displayed and printed to nearest 0.1 degree F.

1.2.8.1 Space Temperature

Space temperature with a range of 50 to 85 degrees F plus or minus 0.75 degree F for conditioned space; 30 to 130 degrees F plus or minus 1 degree F for unconditioned space.

1.2.8.2 Duct Temperature

Duct temperature with a range of 40 to 140 degrees F plus or minus 2 degrees F.

1.2.8.3 Outside Air Temperature

Outside air (OA) temperature with a range of minus 30 to plus 130 degrees F plus or minus 2 degrees F; with a subrange of 30 to 100 degrees F plus or minus 1 degree F.

1.2.8.4 Water Temperature

Water temperature with a range of 30 to 100 degrees F plus or minus 0.75 degree F; the range of 100 to 250 degrees F plus or minus 2 degrees F; and water temperatures for the purpose of performing Btu calculations using differential temperatures to plus or minus 0.5 degree F using matched sensors.

1.2.8.5 High Temperature

High temperature with a range of 200 to 500 degrees F plus or minus 2.0 degrees F.

1.2.8.6 Relative Humidity

Relative humidity, within a range of 20 to 80 percent, plus or minus 6.0 percent of range (display and print to nearest 1.0 percent).

1.2.8.7 Pressure

Pressure with a range for the specific application plus or minus 2.0 percent of range (display and print to nearest psi.)

1.2.8.8 Flow

Flow with a range for the specific application plus or minus 3.0 percent of range, and flows for the purpose of thermal calculations to plus or minus 2.0 percent of actual flow (display and print to nearest unit, such as gallons per minute).

1.2.8.9 KWh and kW Demand

KWh and kW demand with a range for the specific application plus or minus 1.0 percent of reading (display and print to nearest kWh or kW).

1.2.8.10 Analog Value Input

An analog value input to the system's equipment via an AI with a maximum error of 0.50 percent of range, not including the sensor or transmitter error. This accuracy shall be maintained over the specified environmental conditions.

1.3 SUBMITTALS

Government approval is required for submittals with a "G" designation; submittals not having a "G" designation are for information only. When used, a designation following the "G" designation identifies the office that will review the submittal for the Government. The following shall be submitted in accordance with Section 01330 SUBMITTAL PROCEDURES:

SD-02 Shop Drawings

HVAC Control System; [_____], [_____]

Drawings shall be on 34 by 22 inch sheets in the form and arrangement shown. The drawings shall use the same abbreviations, symbols, nomenclature and identifiers shown. Each control system element on a drawing shall have a unique identifier as shown. The HVAC Control System Drawings shall be delivered together as a complete submittal. Deviations must be approved by the Contracting Officer. Drawings shall be submitted along with Submittal SD-01, Data.

a. HVAC Control System Drawings shall include the following:

Sheet One: Drawing Index, HVAC Control System Legend.

Sheet Two: Valve Schedule, Damper Schedule.

Sheet Three: Compressed Air Station Schematic.

Sheet Four: Control System Schematic and Equipment Schedule.

Sheet Five: Sequence of Operation and Data Terminal Strip Layout.

Sheet Six: Control Loop Wiring Diagrams.

Sheet Seven: Motor Starter and Relay Wiring Diagram.

Sheet Eight: Communication Network and Block Diagram.

Sheet Nine: DDC Panel Installation and Block Diagram.

(Repeat Sheets Four through Seven for each AHU System.)

b. The HVAC Control System Drawing Index shall show the name and number of the building, military site, State or other similar designation, and Country. The Drawing Index shall list HVAC Control System Drawings, including the drawing number, sheet number, drawing title, and computer filename when used. The HVAC Control System Legend shall show generic symbols and the name of devices shown on the HVAC Control System Drawings.

c. The valve schedule shall include each valve's unique identifier, size, flow coefficient Cv, pressure drop at specified flow rate, spring range, positive positioner range, actuator size, close-off pressure data, dimensions, and access and clearance requirements data. Valve schedules may be submitted in advance but shall be included in the complete submittal.

d. The damper schedule shall contain each damper's and each actuator's identifier, nominal and actual sizes, orientation of

axis and frame, direction of blade rotation, spring ranges, operation rate, positive positioner ranges, locations of actuators and damper end switches, arrangement of sections in multi-section dampers, and methods of connecting dampers, actuators, and linkages. The Damper Schedule shall include the maximum leakage rate at the operating static-pressure differential. The Damper Schedule shall contain actuator selection data supported by calculations of the torque required to move and seal the dampers, access and clearance requirements. Damper schedules may be submitted in advance but shall be included in the complete submittal.

e. The compressed air station schematic diagram shall show all equipment, including: compressor with motor horsepower and voltage; starter; isolators; manual bypasses; tubing sizes; drain piping and drain traps; reducing valves; dryer; and data on manufacturer's names and model numbers, mounting, access, and clearance requirements. Air Compressor and air dryer data shall include calculations of the air consumption of all current-to-pneumatic transducers and of any other control system devices to be connected to the compressed air station, and the compressed air supply dewpoint temperature at 20 psig. Compressed air station schematic drawings shall be submitted for each compressed air station.

f. The HVAC control system schematics shall be in the form shown, and shall show all control and mechanical devices associated with the HVAC system. A system schematic drawing shall be submitted for each HVAC system.

g. The HVAC control system equipment Schedule shall be in the form shown. All devices shown on the drawings having unique identifiers shall be referenced in the equipment schedule. Information to be included in the equipment schedule shall be the control loop, device unique identifier, device function, setpoint, input range, and additional important parameters (i.e., output range). An equipment schedule shall be submitted for each HVAC system.

h. The HVAC control system sequence of operation shall reflect the language and format of this specification, and shall refer to the devices by their unique identifiers as shown. No operational deviations from specified sequences will be permitted without prior written approval of the Contracting Officer. Sequences of operation shall be submitted for each HVAC control system including each type of terminal unit control system.

i. The HVAC control system wiring diagrams shall be functional wiring diagrams which show the interconnection of conductors and cables to HVAC control panel terminal blocks and to the identified terminals of devices, starters and package equipment. The wiring diagrams shall show necessary jumpers and ground connections. The wiring diagrams shall show the labels of all conductors. Sources of power required for HVAC control systems and for packaged equipment control systems shall be identified back to the panel board circuit breaker number, HVAC system control panel, magnetic starter, or packaged equipment control circuit. Each power supply and transformer not integral to a controller, starter, or packaged equipment shall be shown. The connected volt-ampere load and the

power supply volt-ampere rating shall be shown. Wiring diagrams shall be submitted for each HVAC control system.

SD-03 Product Data

Service Organizations; [_____], [_____]

[Six] [_____] copies of a list of service organizations qualified to service the HVAC control system. The list shall include the service organization name, address, technical point of contact and telephone number, and contractual point of contact and telephone number.

Equipment Compliance Booklet; [_____], [_____]

The HVAC Control System Equipment Compliance Booklet (ECB) shall be in booklet form and indexed, with numbered tabs separating the information on each device. It shall consist of, but not be limited to, data sheets and catalog cuts which document compliance of all devices and components with the specifications. The ECB shall be indexed in alphabetical order by the unique identifiers. Devices and components which do not have unique identifiers shall follow the devices and components with unique identifiers and shall be indexed in alphabetical order according to their functional name. The ECB shall include a Bill of Materials for each HVAC Control System. The Bill of Materials shall function as the Table of Contents for the ECB and shall include the device's unique identifier, device function, manufacturer, model/part/catalog number used for ordering, and tab number where the device information is located in the ECB. The ECB shall be submitted along with Submittal SD-04, Drawings.

Commissioning Procedures; [_____], [_____]

[Six] [_____] copies of the HVAC control system commissioning procedures, in booklet form and indexed, 60 days prior to the scheduled start of commissioning. Commissioning procedures shall be provided for each HVAC control system, and for each type of terminal unit control system. The Commissioning procedures shall reflect the format and language of this specification, and refer to devices by their unique identifiers as shown. The Commissioning procedures shall be specific for each HVAC system, and shall give detailed step-by-step procedures for commissioning of the system.

a. The Commissioning procedures shall include detailed, product specific set-up procedures, configuration procedures, adjustment procedures, and calibration procedures for each device. Where the detailed product specific commissioning procedures are included in manufacturer supplied manuals, reference may be made in the HVAC control system commissioning procedures to the manuals.

b. An HVAC control system commissioning procedures equipment list shall be included that lists the equipment to be used to accomplish commissioning. The list shall include manufacturer name, model number, equipment function, the date of the latest calibration, and the results of the latest calibration.

Performance Verification Test Procedures; [_____], [_____]

[Six] [_____] copies of the HVAC Control System Performance Verification Test Procedures, in booklet form and indexed, 60 days before the Contractor's scheduled test dates. The performance verification test procedures shall refer to the devices by their unique identifiers as shown, shall explain, step-by-step, the actions and expected results that will demonstrate that the HVAC control system performs in accordance with the sequences of operation, and other contract documents. An HVAC control system performance verification test equipment list shall be included that lists the equipment to be used during performance verification testing. The list shall include manufacturer name, model number, equipment function, the date of the latest calibration, and the results of the latest calibration.

Training; [_____], [_____]

An outline for the HVAC control system training course with a proposed time schedule. Approval of the planned training schedule shall be obtained from the Government at least [60] [_____] days prior to the start of the training. [Six] [_____] copies of HVAC control system training course material 30 days prior to the scheduled start of the training course. The training course material shall include the operation manual, maintenance and repair manual, and paper copies of overheads used in the course.

SD-06 Test Reports

Commissioning Report; [_____], [_____]

[Six] [_____] copies of the HVAC Control System Commissioning Report, in booklet form and indexed, within 30 days after completion of the system commissioning. The commissioning report shall include data collected during the HVAC control system commissioning procedures and shall follow the format of the commissioning procedures. The commissioning report shall include all configuration checksheets with final values listed for all parameters, setpoints, P, I, D setting constants, calibration data for all devices, results of adjustments, and results of testing.

Performance Verification Test; [_____], [_____]

[Six] [_____] copies of the HVAC Control System Performance Verification Test Report, in booklet form and indexed, within 30 days after completion of the test. The HVAC control system performance verification test report shall include data collected during the HVAC control system performance verification test. The original copies of all data gathered during the performance verification test shall be turned over to the Government after Government approval of the test results.

SD-07 Certificates

Air Storage Tank; [_____], [_____]

An ASME Air Storage Tank Certificate for each storage tank.

SD-10 Operation and Maintenance Data

Operation Manual; [_____], [_____]
Maintenance and Repair Manual; [_____], [_____]

[Six] [_____] copies of the [HVAC Control System Operation Manual] [and] [HVAC Control System Maintenance and Repair Manual], for each HVAC control system, 30 days before the date scheduled for the training course.

1.4 DELIVERY AND STORAGE

Products shall be stored with protection from the weather, humidity and temperature variations, dirt and dust, and other contaminants, within the storage condition limits published by the equipment manufacturer. Dampers shall be stored so that seal integrity, blade alignment and frame alignment are maintained.

1.5 OPERATION MANUAL

An HVAC control system operation manual in indexed booklet form shall be provided for each HVAC control system. The operation manual shall include the HVAC control system sequence of operation, and procedures for the HVAC system start-up, operation and shut-down. The operation manual shall include as-built HVAC control system detail drawings. The operation manual shall include the as-built configuration checksheets, the procedures for changing HVAC control system setpoints, and the procedures for placing HVAC system controllers in the manual control mode.

a. The procedures for changing HVAC control system setpoints shall describe the step-by-step procedures required to change the process variable setpoints, the alarm setpoints, the bias settings, and setpoint reset schedules.

b. The procedures for placing HVAC system controllers in the manual control mode shall describe step-by-step procedures required to obtain manual control of each controlled device and to manually adjust their positions.

1.6 MAINTENANCE AND REPAIR MANUAL

An HVAC control system maintenance and repair manual in indexed booklet form in hardback binders shall be provided for each HVAC control system. The maintenance and repair manual shall include the routine maintenance checklist, a recommended repair methods list, a list of recommended maintenance and repair tools, the qualified service organization list, the as-built commissioning procedures and report, the as-built performance verification test procedures and report, and the as-built equipment data booklet.

a. The routine maintenance checklist shall be arranged in a columnar format. The first column shall list all devices listed in the equipment compliance booklet, the second column shall state the maintenance activity or state no maintenance required, the third column shall state the frequency of the maintenance activity, and the fourth column for additional comments or reference.

b. The recommended repair methods list shall be arranged in a columnar format and shall list all devices in the equipment data compliance booklet and state the guidance on recommended repair methods, either field repair, factory repair, or whole-item replacement.

c. The as-built equipment data booklet shall include the equipment compliance booklet and manufacturer supplied user manuals and information.

d. If the operation manual and the maintenance and repair manual are provided in a common volume, they shall be clearly differentiated and separately indexed.

1.7 MAINTENANCE AND SERVICE

Services, materials and equipment shall be provided as necessary to maintain the entire system in an operational state as specified for a period of one year after successful completion and acceptance of the Performance Verification Test. Impacts on facility operations shall be minimized.

1.7.1 Description of Work

The adjustment and repair of the system shall include the manufacturer's required adjustments of computer equipment, software updates, transmission equipment and instrumentation and control devices.

1.7.2 Personnel

Service personnel shall be qualified to accomplish work promptly and satisfactorily. The Government shall be advised in writing of the name of the designated service representative, and of any changes in personnel.

1.7.3 Scheduled Inspections

Two inspections shall be performed at six-month intervals and all work required shall be performed. Inspections shall be scheduled in [June and December] [_____]. These inspections shall include:

a. Visual checks and operational tests of equipment.

b. Fan checks and filter changes for control system equipment.

c. Clean control system equipment including interior and exterior surfaces.

d. Check and calibrate each field device. Check and calibrate 50 percent of the total analog points during the first inspection. Check and calibrate the remaining 50 percent of the analog points during the second major inspection. Certify analog test instrumentation accuracy to be twice that of the device being calibrated. Randomly check at least 25 percent of all digital points for proper operation during the first inspection. Randomly check at least 25 percent of the remaining digital points during the second inspection.

e. Run system software diagnostics and correct diagnosed problems.

f. Resolve any previous outstanding problems.

1.7.4 Scheduled Work

This work shall be performed during regular working hours, Monday through Friday, excluding legal holidays.

1.7.5 Emergency Service

The Government will initiate service calls when the system is not functioning properly. Qualified personnel shall be available to provide service to the system. A telephone number where the service supervisor can be reached at all times shall be provided. Service personnel shall be at the site within 24 hours after receiving a request for service. The control system shall be restored to proper operating condition within three calendar days after receiving a request for service.

1.7.6 Operation

Scheduled adjustments and repairs shall include verification of the control system operation as demonstrated by the applicable tests of the performance verification test.

1.7.7 Records and Logs

Dated records and logs shall be kept of each task, with cumulative records for each major component, and for the complete system chronologically. A continuous log shall be maintained for all devices. The log shall contain initial analog span and zero calibration values and digital points. Complete logs shall be kept and shall be available for inspection onsite, demonstrating that planned and systematic adjustments and repairs have been accomplished for the control system.

1.7.8 Work Requests

Each service call request shall be recorded as received and shall include the serial number identifying the component involved, its location, date and time the call was received, nature of trouble, names of the service personnel assigned to the task, instructions describing what has to be done, the amount and nature of the materials to be used, the time and date work started, and the time and date of completion. A record of the work performed shall be submitted within 5 days after work is accomplished.

1.7.9 System Modifications

Recommendations for system modification shall be submitted in writing. No system modifications, including operating parameters and control settings, shall be made without prior approval of the Government. Any modifications made to the system shall be incorporated into the operations and maintenance manuals, and other documentation affected.

1.7.10 Software

Updates to the software shall be provided for system, operating and application software, and operation in the system shall be verified. Updates shall be incorporated into operations and maintenance manuals, and software documentation. There shall be at least one scheduled update near the end of the first year's warranty period, at which time the latest released version of the Contractor's software shall be installed and validated.

1.8 FACTORY TESTING

The Contractor shall assemble the factory test DDC system as specified and shall perform test to demonstrate that the performance of the system satisfies the requirements of this specification. Model numbers of

equipment tested shall be identical to those to be delivered to the site. Original copies of data produced, including results of each test procedure during factory testing shall be delivered to the Government at the conclusion of testing, prior to Government approval of the test. The test results documentation shall be arranged so that commands, responses, and data acquired are correlated in a manner which will allow for logical interpretation of the data.

1.8.1 Factory Test Setup

The factory test setup shall include the following:

a. Central workstation/tester.

b. Printer.

c. DDC test set.

d. Portable workstation/tester.

e. Communication links of each type and speed including MODEMs.

f. Dial-up MODEM.

g. Software.

PART 2 PRODUCTS

2.1 GENERAL EQUIPMENT REQUIREMENTS

Units of the same type of equipment shall be products of a single manufacturer. Each major component of equipment shall have the manufacturer's name and address, and the model and serial number in a conspicuous place. Materials and equipment shall be standard products of a manufacturer regularly engaged in the manufacturing of such products, which are of a similar material, design and workmanship. The standard products shall have been in a satisfactory commercial or industrial use for two years prior to use on this project. The two years' use shall include applications of equipment and materials under similar circumstances and of similar size. The two years' experience shall be satisfactorily completed by a product which has been sold or is offered for sale on the commercial market through advertisements, manufacturers' catalogs, or brochures. Products having less than a two-year field service record will be acceptable if a certified record of satisfactory field operation, for not less than 6,000 hours exclusive of the manufacturer's factory tests, can be shown. The equipment items shall be supported by a service organization. Items of the same type and purpose shall be identical, including equipment, assemblies, parts and components. Automatic temperature controls shall be direct digital controls that will provide the required sequence of operation.

2.1.1 Electrical and Electronic Devices

Electrical, electronic, and electropneumatic devices not located within a DDC panel shall have a NEMA ICS 1 enclosure in accordance with NEMA 250 unless otherwise shown.

2.1.2 Standard Signals

Except for air distribution terminal unit control equipment, the output of all analog transmitters and the analog input and output of all DDC controllers shall be 4-to-20 mAdc signals. The signal shall originate from current-sourcing devices and shall be received by current-sinking devices.

2.1.3 Ambient Temperature Limits

DDC panels shall have ambient condition ratings of 35 to 120 degrees F and 10 to 95 percent relative humidity, noncondensing. Devices installed outdoors shall operate within limit ratings of minus 35 to plus 150 degrees F. Instrumentation and control elements shall be rated for continuous operation under the ambient environmental temperature, pressure, humidity, and vibration conditions specified or normally encountered for the installed location.

2.1.4 Year 2000 Compliance

All equipment and software shall be Year 2000 compliant and shall be able to accurately process date/time data (including, but not limited to, calculating, comparing, and sequencing) from, into, and between the twentieth and twenty-first centuries, including leap year calculations, when used in accordance with the product documentation provided by the contractor, provided that all products (e.g. hardware, software, firmware) used in combination with other information technology, shall accurately process date/time data if other information technology properly exchanges date/time data with it.

2.2 TUBING

2.2.1 Copper

Copper tubing shall conform to ASTM B 88, ASTM B 88M and shall have sweat fittings and valves.

2.2.2 Stainless Steel

Stainless steel tubing shall conform to ASTM A 269 and shall have stainless steel compression fittings.

2.2.3 Plastic

Plastic tubing shall have barbed fittings and valves. Plastic tubing shall have the burning characteristics of linear low-density polyethylene tubing, shall be self-extinguishing when tested in accordance with ASTM D 635, shall have UL 94 V-2 flammability classification, and shall withstand stress cracking when tested in accordance with ASTM D 1693. Plastic-tubing bundles shall be provided with Mylar barrier and flame-retardant polyethylene jacket.

2.3 WIRING

2.3.1 Terminal Blocks

Terminal blocks shall be insulated, modular, feed-through, clamp style with recessed captive screw-type clamping mechanism, shall be suitable for rail mounting, and shall have end plates and partition plates for separation or shall have enclosed sides.

2.3.2 Control Wiring for 24-Volt Circuits

Control wiring for 24-volt circuits shall be 18 AWG minimum, stranded copper and shall be rated for 300-volt service.

2.3.3 Wiring for 120-Volt Circuits

Wiring for 120-volt circuits shall be 18 AWG minimum, stranded copper and shall be rated for 600-volt service.

2.3.4 Instrumentation Cable

Instrumentation cable shall be 18 AWG, stranded copper, single- or multiple-twisted, minimum 2 inch lay of twist, 100 percent shielded pairs, and shall have a 300-volt insulation. Each pair shall have a 20 AWG tinned-copper drain wire and individual overall pair insulation. Cables shall have an overall aluminum-polyester or tinned-copper cable-shield tape, overall 20 AWG tinned-copper cable drain wire, and overall cable insulation.

2.3.5 Transformers

Step down transformers shall be utilized where control equipment operates at lower than line circuit voltage. Transformers, other than transformers in bridge circuits, shall have primaries wound for the voltage available and secondaries wound for the correct control circuit voltage. Transformer shall be sized so that the connected load is 80 percent of the rated capacity or less. Transformers shall conform to UL 508 and NEMA ST 1.

2.4 ACTUATORS

Actuators shall be [pneumatic] [electric or electronic] as shown and shall be provided with mounting and connecting hardware. Electric or electronic actuators shall be used for variable air volume (VAV) air terminal units. Actuators shall fail to their spring-return positions on signal or power failure [,except that VAV terminal unit actuators may be of the floating type]. The actuator stroke shall be limited in the direction of power stroke by an adjustable stop. Actuators shall have a visible position indicator. Actuators shall smoothly open or close the devices to which they are applied and shall have a full stroke response time of 90 seconds or less. Electric actuators shall have an oil-immersed gear train. Electric or electronic actuators operating in series shall have an auxiliary actuator driver. Electric or electronic actuators used in sequencing applications shall have an adjustable operating range and start point. Pneumatic actuators shall be rated for 25 psig operating pressure except for high-pressure cylinder-type actuators.

2.4.1 Valve Actuators

Valve actuators shall be selected to provide a minimum of 125 percent of the motive power necessary to operate the valve over its full range of operation.

2.4.2 Positive Positioners

Positive positioners are required for pneumatic actuators. Each positive positioner shall be a pneumatic relay with a mechanical feedback mechanism and an adjustable operating range and starting point.

2.5 AUTOMATIC CONTROL VALVES

Valves shall have stainless-steel stems and stuffing boxes with extended necks to clear the piping insulation. Unless otherwise stated, valves shall have globe style bodies. Valve bodies shall be designed for not less than 125 psig working pressure or 150 percent of the system operating pressure, whichever is greater. Valve leakage rating shall be 0.01 percent of rated Cv. Unless otherwise specified, bodies for valves 1-1/2 inches and smaller shall be brass or bronze, with threaded or union ends; bodies for 2 inch valves shall have threaded ends; and bodies for valves 2 to 3 inches shall be of brass, bronze or iron. Bodies for valves 2-1/2 inches and larger shall be provided with flanged-end connections. Valve Cv shall be within 100 to 125 percent of the Cv shown.

2.5.1 Butterfly Valve Assembly

Butterfly valves shall be threaded lug type suitable for dead-end service and modulation to the fully-closed position, with carbon-steel bodies and noncorrosive discs, stainless steel shafts supported by bearings, and EPDM seats suitable for temperatures from minus 20 to plus 250 degrees F. Valves shall have a manual means of operation independent of the actuator. The rated Cv for butterfly valves shall be the value Cv at 70% open (60 degrees open).

2.5.2 Two-Way Valves

Two-way modulating valves shall have equal-percentage characteristics.

2.5.3 Three-Way Valves

Three-way valves shall provide linear flow control with constant total flow throughout full plug travel.

2.5.4 Duct-Coil and Terminal-Unit-Coil Valves

Control valves with either flare-type or solder-type ends shall be provided for duct or terminal-unit coils. Flare nuts shall be furnished for each flare-type end valve.

2.5.5 Valves for Chilled-Water, Condenser-Water, and Glycol Service

Internal valve trim shall be bronze except that valve stems may be type 316 stainless steel. Valve Cv shall be within 100 to 125 percent of the Cv shown. Valves 4 inches and larger shall be butterfly.

2.5.6 Valves for Hot-Water and Dual Temperature Service

For hot water service below 250 degrees F and dual-temperature service, internal trim (including seats, seat rings, modulating plugs, and springs) of valves controlling water hotter than 210 degrees F shall be Type 316 stainless steel. Internal trim for valves controlling water 210 degrees F or less shall be brass or bronze. Nonmetallic parts of hot-water control valves shall be suitable for a minimum continuous operating temperature of 250 degrees F or 50 degrees F above the system design temperature, whichever is higher. Valves 4 inches and larger shall be butterfly valves.

2.5.7 Valves for Steam Service

Bodies for valves 4 inches and larger shall be iron. Internal valve trim shall be Type 316 stainless steel. Valve Cv shall be not less than shown

nor greater than the Cv of the manufacturer's next larger size.

2.5.8 Valves for High-Temperature Hot-Water Service

For high-temperature hot water service above 250 Degrees F, valve bodies shall be rated ANSI Class 300, as specified in ASME B16.34. Valve and actuator combination shall be normally closed. Bodies shall be carbon steel, globe type with welded ends on valves 1 inch and larger. Valves smaller than 1 inch shall have socket-weld ends. Packing shall be virgin polytetrafluoroethylene (PTFE). Internal valve trim shall be Type 316 stainless steel. Valve Cv shall be within 100 to 125 percent of the Cv shown.

2.6 DAMPERS

2.6.1 Damper Assembly

A single damper section shall have blades no longer than 48 inches and shall be no higher than 72 inches. Maximum damper blade width shall be 8 inches. Larger sizes shall be made from a combination of sections. Dampers shall be steel, or other materials where shown. Flat blades shall be made rigid by folding the edges. Blade-operating linkages shall be within the frame so that blade-connecting devices within the same damper section shall not be located directly in the air stream. Damper axles shall be 0.5 inch minimum, plated steel rods supported in the damper frame by stainless steel or bronze bearings. Blades mounted vertically shall be supported by thrust bearings. Pressure drop through dampers shall not exceed 0.04 inch water gauge at 1,000 feet per minute in the wide-open position. Frames shall not be less than 2 inches in width. Dampers shall be tested in accordance with AMCA 500.

2.6.2 Operating Links

Operating links external to dampers, such as crankarms, connecting rods, and line shafting for transmitting motion from damper actuators to dampers, shall withstand a load equal to at least twice the maximum required damper-operating force. Rod lengths shall be adjustable. Links shall be brass, bronze, zinc-coated steel, or stainless steel. Working parts of joints and clevises shall be brass, bronze, or stainless steel. Adjustments of crankarms shall control the open and closed positions of dampers.

2.6.3 Damper Types

Dampers shall be parallel-blade type.

2.6.3.1 Outside Air, Return Air, and Relief Air Dampers

Outside air, return air and relief air dampers shall be provided where shown. Blades shall have interlocking edges and shall be provided with compressible seals at points of contact. The channel frames of the dampers shall be provided with jamb seals to minimize air leakage. Dampers shall not leak in excess of 20 cfm per square foot at 4 inches water gauge static pressure when closed. Seals shall be suitable for an operating temperature range of minus 40 to plus 200 degrees F. Dampers shall be rated at not less than 2,000 feet per minute air velocity.

2.6.3.2 Mechanical and Electrical Space Ventilation Dampers

Mechanical and electrical space ventilation dampers shall be as shown. Dampers shall not leak in excess of 80 cfm square foot at 4 inches water gauge static pressure when closed. Dampers shall be rated at not less than 1,500 feet per minute air velocity.

2.6.3.3 Smoke Dampers

Smoke-damper and actuator assembly required per NFPA 90A shall meet the Class II leakage requirements of UL 555S. Dampers shall be rated at not less than 2000 fpm air velocity.

2.6.4 Damper End Switches

Each end switch shall be a hermetically sealed switch with a trip lever and over-travel mechanism. The switch enclosure shall be suitable for mounting on the duct exterior and shall permit setting the position of the trip lever that actuates the switch. The trip lever shall be aligned with the damper blade.

2.7 SMOKE DETECTORS

Duct smoke detectors shall be provided in supply and return air ducts in accordance with NFPA 90A. Duct smoke detectors shall conform to the requirements of UL 268A. Duct smoke detectors shall have perforated sampling tubes extended into the air duct. Detector circuitry shall be mounted in a metallic enclosure exterior to the duct. [Detectors shall have manual reset.] Detectors shall be rated for air velocities that include air flows between [500 and 4000] [_____] fpm. Detectors shall be powered from the [HVAC control panel.] [fire alarm control panel (FACP).] Detectors shall have two sets of normally open alarm contacts and two sets of normally closed alarm contacts. [Detectors shall be connected to the building fire alarm panel for alarm initiation.] A remote annunciation lamp and accessible remote reset switch shall be provided for duct detectors that are mounted eight feet or more above the finished floor and for detectors that are not readily visible. Remote lamps and switches as well as the affected fan units shall be properly identified in etched rigid plastic placards.

2.8 INSTRUMENTATION

2.8.1 Measurements

Transmitters shall be calibrated to provide the following measurements, over the indicated ranges, for an output of 4 to 20 mAdc:

a. Conditioned space temperature, from 50 to 85 degrees F.

b. Duct temperature, from 40 to 140 degrees F.

c. High-temperature hot-water temperature, from 200 to 500 degrees F.

d. Chilled-water temperature, from 30 to 100 degrees F.

e. Dual-temperature water, from 30 to 240 degrees F.

f. Heating hot-water temperature, from 50 to 250 degrees F.

g. Condenser-water temperature, from 30 to 130 degrees F.

h. Outside-air temperature, from minus 30 to 130 degrees F.

i. Relative humidity, 0 to 100 percent for space and duct high-limit applications.

j. Differential pressure for VAV supply-duct static pressure from 0 to 2.0 inches water gauge.

k. Pitot-tube air-flow measurement station and transmitter, from 0 to 0.1 inch water gauge for flow velocities of 700 to 1200 fpm, 0 to 0.25 inch water gauge for velocities of 700 to 1800 fpm, or 0 to 0.5 inch water gauge for velocities of 700 to 2500 fpm.

l. Electronic air-flow measurement station and transmitter, from 125 to 2500 fpm.

2.8.2 Temperature Instruments

2.8.2.1 Resistance Temperature Detectors (RTD)

Temperature sensors shall be 100 ohms 3- or 4-wire RTD. Each RTD shall be platinum with a tolerance of 0.54 degrees F at 32 degrees F with a temperature coefficient of resistance (TCR) of .00214 ohms/ohm/deg F and shall be encapsulated in epoxy, series 300 stainless steel, anodized aluminum, or copper. Each RTD shall be furnished with an RTD transmitter as specified, integrally mounted unless otherwise shown.

2.8.2.2 Continuous Averaging RTD

Continuous averaging RTDs shall have a tolerance of plus or minus 1.0 degree F at the reference temperature, and shall be of sufficient length to ensure that the resistance represents an average over the cross section in which it is installed. The sensing element shall have a bendable copper sheath. Each averaging RTD shall be furnished with an RTD transmitter to match the resistance range of the averaging RTD.

2.8.2.3 RTD Transmitter

The RTD transmitter shall match the resistance range of the RTD. The transmitter shall be a two-wire, loop powered device. The transmitter shall produce a linear 4-to-20 mAdc output corresponding to the required temperature measurement. The output error shall not exceed 0.1 percent of the calibrated measurement.

2.8.3 Relative Humidity Instruments

A relative-humidity instrument for indoor application shall have a measurement range from 0 to 100 percent relative-humidity and be rated for operation at ambient air temperatures within the range of 25 to 130 degrees F. It shall be capable of being exposed to a condensing air stream (100 percent RH) with no adverse effect to the sensor's calibration or other harm to the instrument. The instrument shall be of the wall-mounted or duct-mounted type, as required by the application, and shall be provided with any required accessories. Instruments used in duct high-limit applications shall have a bulk polymer resistive sensing element. Duct-mounted instruments shall be provided with a duct probe designed to protect the sensing element from dust accumulation and mechanical damage. The instrument (sensing element and transmitter) shall be a two-wire, loop-powered device and shall have an accuracy of plus or minus three

percent of full scale within the range of 20 to 80 percent relative humidity. The instrument shall have a typical long-term stability of 1 percent or less drift per year. The transmitter shall convert the sensing element's output to a linear 4-20 mAdc output signal in proportion to the measured relative-humidity value. The transmitter shall include offset and span adjustments.

2.8.4 Electronic Airflow Measurement Stations and Transmitters

2.8.4.1 Stations

Each station shall consist of an array of velocity sensing elements and an air-flow straightener. Air-flow straightener shall be contained in a flanged sheet metal or aluminum casing. The velocity sensing elements shall be of the RTD or thermistor type, producing a temperature compensated output. The sensing elements shall be distributed across the duct cross section in the quantity and pattern specified by the published application data of the station manufacturer. The resistance to air flow through the airflow measurement station shall not exceed 0.08 inch water gauge at an airflow of 2,000 fpm. Station construction shall be suitable for operation at airflows of up to 5,000 fpm over a temperature range of 40 to 120 degrees F, and accuracy shall be plus or minus three percent over a range of 125 to 2,500 fpm. In outside air measurement or in low-temperature air delivery applications, the station shall be certified by the manufacturer to be accurate as specified over a temperature range of minus 20 to plus 120 degrees F. In outside air measurement applications,the air flow straightener shall be constructed of 1/8 inch aluminum honeycomb and the depth of the straightener shall not be less than 1.5 inches.

2.8.4.2 Transmitters

Each transmitter shall produce a linear, 4-to-20 mAdc, output corresponding to the required velocity pressure measurement. The transmitter shall be a two-wire, loop powered device. The output error of the transmitter shall not exceed 0.5 percent of the calibrated measurement.

2.8.5 Pitot Tube Airflow Measurement Stations and Transmitters

2.8.5.1 Stations

Each station shall contain an array of velocity sensing elements and straightening vanes inside a flanged sheet metal casing. The velocity sensing elements shall be of the multiple pitot tube type with averaging manifolds. The sensing elements shall be distributed across the duct cross section in the quantity and pattern specified by the published installation instructions of the station manufacturer. The resistance to air flow through the airflow measurement station shall not exceed 0.08 inch water gauge at an airflow of 2,000 fpm. Station construction shall be suitable for operation at airflows of up to 5,000 fpm over a temperature range of 40 to 120 degrees F, and accuracy shall be plus or minus three percent over a range of 500 to 2,500 fpm. This device will not be used if the required velocity measurement is below 700 fpm or for outside airflow measurements.

2.8.5.2 Transmitters

Each transmitter shall produce a linear 4-to-20 mAdc output corresponding to the required velocity pressure measurement. Each transmitter shall have a low range differential pressure sensing element. The transmitter shall

be a two-wire, loop powered device. Sensing element accuracy shall be plus or minus one percent of full scale, and overall transmitter accuracy shall be plus or minus 0.25 percent of the calibrated measurement.

2.8.6 Differential Pressure Instruments

The instrument shall be a pressure transmitter with an integral sensing element. The instrument over pressure rating shall be 300 percent of the operating pressure. The sensor/transmitter assembly accuracy shall be plus or minus two percent of full scale. The transmitter shall be a two-wire, loop-powered device. The transmitter shall produce a linear 4-to-20 mAdc output corresponding to the required pressure measurement.

2.8.7 Thermowells

Thermowells shall be Series 300 stainless steel with threaded brass plug and chain, 2 inch lagging neck and extension type well. Inside diameter and insertion length shall be as required for the application.

2.8.8 Sunshields

Sunshields for outside air temperature sensing elements shall prevent the sun from directly striking the temperature sensing elements. The sunshields shall be provided with adequate ventilation so that the sensing element responds to the ambient temperature of the surroundings. The top of each sunshield shall have a galvanized metal rainshield projecting over the face of the sunshield. The sunshields shall be painted white.

2.9 THERMOSTATS

Thermostat ranges shall be selected so that the setpoint is adjustable without tools between plus or minus 10 degrees F of the setpoint shown. Thermostats shall be electronic or electric.

2.9.1 Nonmodulating Room Thermostats

Contacts shall be single-pole double-throw (SPDT), hermetically sealed, and wired to identified terminals. Maximum differential shall be 5 degrees F. Room thermostats shall be enclosed with separate locking covers (guards).

2.9.2 Microprocessor Based Room Thermostats

Microprocessor based thermostats shall have built-in keypads for scheduling of day and night temperature settings. When out of the scheduling mode, thermostats shall have continuous display of time, with AM and PM indicator, continuous display of day of week, and either continuous display of room temperature with display of temperature setpoint on demand, or continuous display of temperature setpoint with display of room temperature on demand. In the programmable mode, the display shall be used for interrogating time program ON-OFF setpoints for all seven days of the week. The time program shall allow two separate temperature setback intervals per day. The thermostats shall have a means for temporary and manual override of the program schedule, with automatic program restoration on the following day. Thermostats shall have a replaceable battery to maintain the timing and maintain the schedule in memory for one year in the event of a power outage. Maximum differential shall be 2 degrees F. When used for heat pump applications, the thermostat shall have an emergency heat switch.

2.9.3 Modulating Room Thermostats

Modulating room thermostats shall have either one output signal, two output signals operating in unison, or two output signals operating in sequence, as required for the application. Each thermostat shall have an adjustable throttling range of 4 to 8 degrees F for each output. Room thermostats shall be enclosed with separate locking covers (guards).

2.9.4 Nonmodulating Capillary Thermostats and Aquastats

Each thermostat shall have a capillary length of at least 5 feet, shall have adjustable direct-reading scales for both setpoint and differential, and shall have a differential adjustable from 6 to 16 degrees F. Aquastats shall be of the strap on type, with 10 degrees F fixed differential.

2.9.5 Freezestats

Freezestats shall be manual reset, low temperature safety thermostats, with NO and NC contacts and a 20 foot element which shall respond to the coldest 18 inch segment.

2.9.6 Modulating Capillary Thermostats

Each thermostat shall have either one output signal, two output signals operating in unison, or two output signals operating in sequence, as required for the application. Thermostats shall have adjustable throttling ranges of 4 to 8 degrees F for each output.

2.9.7 Fan-Coil Unit Room Thermostats

Fan-coil unit thermostats in personnel living spaces shall be of the low voltage type with locking covers. Electrical rating shall not exceed 2.5 amperes at 30 volts ac. Housing shall be corrosion resisting metal or molded plastic. Transformer and fan relay shall be provided for the proper operation of each thermostatic control system as necessary to suit the design of the control system using the thermostats specified below. Either separate heating thermostats and separate cooling thermostats or dual element heating cooling thermostats may be provided. Motor speed switches shall be provided for three-speed fan control.

2.9.7.1 Heating Thermostat

Fan-coil heating thermostats shall be provided with fixed heat anticipation and shall have a single-pole, single-throw (SPST) switch hermetically sealed and actuated by a bimetallic or bellows type element. Thermostats shall be provided with external temperature setting devices with a factory set maximum of [72] [68] degrees F. Heating thermostats shall have an adjustable range of at least 13 degrees below [72] [68] degrees F.

2.9.7.2 Cooling Thermostat

Fan-coil cooling thermostats shall be provided with fixed cooling anticipation heater and shall have a single-pole, single-throw (SPST) switch hermetically sealed and actuated by a bimetallic or bellows type element. Thermostats shall be provided with external temperature setting devices with a factory set minimum of 78 degrees F. Cooling thermostats shall have an adjustable range of at least 7 degrees above 78 degrees F.

2.9.7.3 Combination Thermostat

Fan coil unit combination heating-cooling thermostats shall be provided with separate temperature sensing elements for each system, and shall have a single-pole, single-throw (SPST) switch, hermetically sealed and actuated by a bimetallic or bellows type element. Each element shall operate switches to provide single stage control for heating and cooling. Scales and ranges shall be as specified for individual thermostats. Thermostats shall contain, or a subbase shall be provided which contains, selector switches for Heat-Off-Cool. A changeover controller providing automatic summer-winter changeover for thermostats by sensing the supplied fluid temperature shall be provided. A limited range heating-cooling dead band thermostat shall control cooling when temperature is above the upper setpoint and heating when temperature is below the lower setpoint and shall have a dead band, with no heating or cooling, when temperature is between the setpoints. Setpoint adjustment shall be concealed.

2.10 PRESSURE SWITCHES AND SOLENOID VALVES

2.10.1 Pressure Switches

Each switch shall have an adjustable setpoint with visible setpoint scale. Range shall be as shown. Differential adjustment shall span 20 to 40 percent of the range of the device.

2.10.2 Differential-Pressure Switches

Each switch shall be an adjustable diaphragm-operated device with two SPDT contacts, with taps for sensing lines to be connected to duct pressure fittings designed to sense air pressure. These fittings shall be of the angled-tip type with tips pointing into the air stream. The setpoint shall not be in the upper or lower quarters of the range and the range shall not be more than three times the setpoint. Differential shall be a maximum of 0.15 inch water gauge at the low end of the range and 0.35 inch water gauge at the high end of the range.

2.10.3 Pneumatic Electric (PE) Switches

Each switch shall have an adjustable setpoint range of 3 to 20 psig with a switching differential adjustable from 2 to 5 psig. The switch action shall be SPDT.

2.10.4 Solenoid-Operated Pneumatic (EP) Valves

Each valve shall have three-port operation: common, normally open, and normally closed. Each valve shall have an outer cast aluminum body and internal parts of brass, bronze, or stainless steel. The air connection shall be a 3/8 inch NPT threaded connection. Valves shall be rated for 50 psig when used in a control system that operates at 25 psig or less, or 150 psig when used in a control system that operates in the range of 25 to 100 psig.

2.11 INDICATING DEVICES

2.11.1 Thermometers

Mercury shall not be used in thermometers.

2.11.1.1 Piping System Thermometers

Piping system thermometers shall have brass, malleable iron or aluminum

alloy case and frame, clear protective face, permanently stabilized glass tube with indicating-fluid column, white face, black numbers, and a 9 inch scale. Thermometers for piping systems shall have rigid stems with straight, angular, or inclined pattern.

2.11.1.2 Piping System Thermometer Stems

Thermometer stems shall have expansion heads as required to prevent breakage at extreme temperatures. On rigid-stem thermometers, the space between bulb and stem shall be filled with a heat-transfer medium.

2.11.1.3 Nonaveraging Air-Duct Thermometers

Air-duct thermometers shall have perforated stem guards and 45-degree adjustable duct flanges with locking mechanism.

2.11.1.4 Averaging Air-Duct Thermometers

Averaging thermometers shall have a 3-1/2 inch (nominal) dial, with black legend on white background, and pointer traveling through a 270-degree arc.

2.11.1.5 Accuracy

Thermometers shall have an accuracy of plus or minus one percent of scale range. Thermometers shall have a range suitable for the application.

2.11.2 Pressure Gauges

Gauges shall be 2 inch (nominal) size, back connected, suitable for field or panel mounting as required, shall have black legend on white background, and shall have a pointer traveling through a 270-degree arc. Accuracy shall be plus or minus three percent of scale range. Gauges shall meet requirements of ASME B40.1.

2.11.2.1 Pneumatic Actuator Gauges

Gauges for indicating signal output to pneumatic actuators shall have an outer scale of 3 to 15 psig in 1 psig graduations.

2.11.2.2 Air Storage Tank and Filter and Dryer Gauge

Gauges for air storage tanks or for use before and after dirt and oil filters or dryers, shall have a scale of 0 to 160 psig with 2 psig graduations.

2.11.2.3 Hydronic System Gauges

Gauges for hydronic system applications shall have ranges and graduations as shown.

2.11.3 Low Differential Pressure Gauges

Gauges for low differential pressure measurements shall be a minimum of 3.5 inch (nominal) size with two sets of pressure taps, and shall have a diaphragm-actuated pointer, white dial with black figures, and pointer zero adjustment. Gauges shall have ranges and graduations as shown. Accuracy shall be plus or minus two percent of scale range.

2.12 CONTROL DEVICES AND ACCESSORIES

2.12.1 Relays

Control relay contacts shall have utilization category and ratings selected for the application, with a minimum of two sets of contacts (two normally open, two normally closed) enclosed in a dustproof enclosure. Relays shall be rated for a minimum life of one million operations. Operating time shall be 20 milliseconds or less. Relays shall be equipped with coil transient suppression devices to limit transients to 150 percent of rated coil voltage. Time delay relays shall be 2PDT with eight-pin connectors, dust cover, and a matching rail-mounted socket. Adjustable timing range shall be 0 to 5 minutes. Power consumption shall not be greater than three watts.

2.12.2 Current to Pneumatic (IP) Transducers

The transducers shall be two-wire current-to-pressure transmitters that convert a 4-to-20 mAdc input signal to a 3 to 15 psig, or a 15 to 3 psig, pneumatic output, with a conversion accuracy of plus or minus two percent of full scale, including linearity and hysteresis. Input impedance shall not exceed 250 ohms. Air consumption shall not be greater than 0.25 scfm.

2.12.3 Joule or Watthour Meters

Watthour meters shall be in accordance with ANSI C12.1 and have pulse initiators for remote monitoring of Watthour consumption. Pulse initiator shall consist of form C contacts with a current rating not to exceed two amperes and voltage not to exceed 500 V, with combinations of VA not to exceed 100 VA, and a life rating of one billion operations. Meter sockets shall be in accordance with ANSI C12.1.

2.12.4 Joule or Watthour Meters with Demand Register

Meters shall be in accordance with ANSI C12.1 and shall have pulse initiators for remote monitoring of Watthour consumption and instantaneous demand. Pulse initiators shall consist of form C contacts with a current rating not to exceed two amperes and voltage not to exceed 500 V, with combinations of VA not to exceed 100 VA, and a life rating of one billion operations. Meter sockets shall be in accordance with ANSI C12.1

2.12.5 Joule or Watthour Transducers

Watthour transducers shall have an accuracy of plus or minus 0.25 percent for kW and kWh outputs from full lag to full lead power factor. Input ranges for kW and kWh transducers shall be selectable without requiring the changing of current or potential transformers. The output shall be 4 to 20 mAdc.

2.12.6 Current Sensing Relays

Current sensing relays shall provide a normally-open contact rated at a minimum of 50 volts peak and 1/2 ampere or 25 VA, noninductive. There shall be a single hole for passage of current carrying conductors. The devices shall be sized for operation at 50 percent rated current based on the connected load. Voltage isolation shall be a minimum of 600 volts.

2.12.7 Power-Line Conditioners (PLC)

Power line conditioners shall be furnished for each DDC panel. The PLCs

shall provide both voltage regulation and noise rejection. The PLCs shall be of the ferro-resonant design, with no moving parts and no tap switching, while electrically isolating the secondary from the power-line side. The PLCs shall be sized for 125 percent of the actual connected kVA load. Characteristics of the PLC shall be as follows:

a. At 85 percent load, the output voltage shall not deviate by more than plus or minus one percent of nominal when the input voltage fluctuates between minus 20 percent to plus 10 percent of nominal.

b. During load changes of zero to full load, the output voltage shall not deviate by more than plus or minus three percent of nominal voltage. Full correction of load switching disturbances shall be accomplished within five cycles, and 95 percent correction shall be accomplished within two cycles of the onset of the disturbance.

c. Total harmonic distortion shall not exceed 3-1/2 percent at full load.

2.13 COMPRESSED AIR STATIONS

2.13.1 Air Compressor Assembly

The air compressor shall be a high pressure compressing unit with electric motor. The compressor shall be equipped with a motor with totally enclosed belt guard, an operating-pressure switch, safety relief valves, gauges, intake filter and intake silencer, and combination type magnetic starter with undervoltage protection and thermal-overload protection for each phase, and shall be supported by a steel base mounted on an air storage tank. The air compressor shall provide the compressed air required for control operation while operating not more than one-third of the time. The air storage tank shall be fabricated for a working pressure of not less than 200 psig, and constructed and certified in accordance with ASME BPVC SEC VIII D1. The tank shall be of sufficient volume so that no more than six compressor starts per hour are required with the starting pressure switch differential set at 20 psig. The tank shall be provided with an automatic condensate drain trap with manual override feature. A second (duplex arrangement) compressor of capacity equal to the primary compressor shall be provided, with interlocked control to provide automatic changeover upon malfunction or failure of either compressor. A manual selector switch shall be provided to index the lead compressor including the automatic changeover.

2.13.2 Compressed Air Station Specialties

2.13.2.1 Refrigerated Dryer, Filters and, Pressure Regulator

A refrigerated dryer shall be provided in the air outlet line of the air storage tank. The dryer shall be of the size required for the full delivery capacity of the compressor. The air shall be dried at a pressure of not less than 70 psig to a temperature not greater than 35 degrees F. The dryer shall be provided with an automatic condensate drain trap with manual override feature. The refrigerant used in the dryer shall be one of the fluorocarbon gases and have an Ozone Depletion Potential of not more than 0.05. A five micron prefilter and coalescing-type 0.03 micron oil removal filter with shut-off valves shall be provided in the dryer discharge. Each filter bowl shall be rated for 150 psig maximum working pressure. A pressure regulator, with high side and low side pressure gauges, and a safety valve shall be provided downstream of the filter.

Pressure regulators of the relieving type shall not be used.

2.13.2.2 Flexible Pipe Connections

The flexible pipe connectors shall be designed for 150 psig and 250 degrees F service, and shall be constructed of rubber, tetrafluoroethylene resin, or braided corrosion-resistant steel, bronze, monel, or galvanized steel. The connectors shall be suitable for the service intended and may have threaded or soldered ends. The length of the connectors shall be as recommended by the manufacturer for the service intended.

2.13.2.3 Vibration Isolation Units

The vibration isolation units shall be standard products with published loading ratings, and shall be single rubber-in-shear, double rubber-in-shear, or spring type.

2.13.2.4 Compressed Air Piping

Control air delivered to the system shall conform to ISA S7.0.01. Air lines for pneumatic controls shall be seamless copper tubing or nonmetallic tubing. Air lines shall be concealed except in mechanical rooms and other areas where other tubing and piping is exposed. Air lines in exposed and concealed locations, free standing or enclosed in the conduit or other protective coverings, shall be run parallel to the building lines and shall be adequately supported from the building structure, at least every 6 feet horizontally and every 8 feet vertically. Copper tubing shall be hard-drawn in exposed areas and either hard-drawn or annealed in concealed areas. Only tool-made bends shall be used. Fittings for copper tubing shall be brass or copper solder joint type except at connections to apparatus, where fittings shall be brass compression type. Nonmetallic tubing shall be compounded from polyethylene, meeting the stress crack test of ASTM D 1693. Nonmetallic individual tube polyethylene or multitube instrument tubing bundle shall be classified as flame retardant under UL 94. The polyethylene material shall be rated as self-extinguishing when tested in accordance with ASTM D 635. Nonmetallic tubing shall be run within covered rigid metallic raceway, rigid conduit or electric metallic tubing except as indicated. Single nonmetallic tubing in a protective sheath, run parallel to the building lines and supported as indicated above, may be used above accessible ceilings and in other concealed but accessible locations. Air lines concealed in walls shall be hard-drawn copper tubing or nonmetallic tubing in rigid conduit. Terminal single lines shall be hard-drawn copper tubing, except when the run is less than 12 inches in length, flexible polyethylene may be used. Nonmetallic tubing will not be used for applications where the tubing could be subjected to a temperature exceeding 130 degrees F. Except in walls and exposed locations, nonmetallic multitube instrument tubing bundle without conduit or metallic raceway protection, may be used where a number of air lines run to the same points, provided the multitube bundle is enclosed in a protective sheath, is run parallel to the building lines and is adequately supported as indicated above. Air lines shall be tested periodically for leaks during installation. Air lines shall be purged of dirt, impurities and moisture before connecting to the control equipment. Fittings for nonmetallic tubing shall be for instrument service and may be brass or acetal resin of the compression or barbed push-on type. Air lines shall be number coded or color coded and keyed to the submittal drawings for future identification and servicing the control system.

2.14 DIRECT DIGITAL CONTROL (DDC) HARDWARE

All functions, constraints, data base parameters, operator developed programs and any other data shall be downloadable from a portable workstation/tester [or the central workstation/tester] to network control panels, RIU's, universal programmable controllers, and unitary controllers. Download shall be accomplished through both the primary network and the local DDC portable workstation/tester port.

2.14.1 Network Control Panel

Network control panels shall be microcomputer-based with sufficient memory provided to perform all specified and shown network control panel functions and operations, including spare capacity for all spares and its I/O functions specified. Each network control panel and remote I/O units (RIU) shall have a minimum of 10% of its I/O functions as spare capacity but not less than 2 of each type used in each. The type of spares shall be in the same proportion as the implemented I/O functions on the panel, but in no case shall there be less than two spare points of each type. The panel I/O functions shall be furnished complete, with no changes or additions necessary to support implementation of spare functions. Output relays associated with digital signals shall be considered part of the I/O function, whether physically mounted in the enclosure or separately mounted. Implementation of spare points shall necessitate only providing the additional field sensor or control device, field wiring including connection to the system, and point definition assignment by the operator using the central workstation/tester or portable workstation/tester. The panel shall contain all necessary I/O functions to connect to field sensors and control panels. I/O function operation shall be fully supervised to detect I/O function failures. Network control panels shall operate in an independent stand-alone mode, which is defined as all network control panel operations performed by the network control panel without any continuing input from other Direct digital controls or portable workstation/tester. The network control panel shall be capable of controlling a mix of at least 32 RIUs, unitary controllers, and universal programmable controllers.

2.14.1.1 Integral Features

The network control panel shall include:

a. Main power switch.

b. Power on indicator.

c. Portable workstation/tester port, connector, and if necessary power supply.

d. Manufacturers control network port.

e. On-Off-Auto switches for each DO which controls a device. These switches shall be mounted in the field panel, with the exception of motors, for which the switch shall be mounted at the motor control center. On-Off-Auto switches are not required for DO associated with a status or alarm such as pilot lights. The status of these switches shall be available to the panel for further processing.

f. Minimum-Maximum-Auto switches, or Auto-Manual switches with manual output override, for each AO. The status of these shall be available to the panel for further processing.

g. An intrusion detection device, connected as an alarm.

2.14.1.2 Communication Interfaces

The following communication capabilities shall function simultaneously.

a. Manufacturers Control Network. Manufacturers control network communications interfaces for each data transmission systems (DTS) circuit between network control panels and RIUs, unitary controllers, and universal programmable controllers, shall be provided. Communication interfaces shall be provided between each network control panel and associated I/O functions. The DTS will provide for transmission speeds necessary to comply with performance requirements specified. DTS equipment shall be installed in the network control panel enclosure.

b. Portable Workstation/Tester Port. A communications port for interfacing to a portable workstation/tester shall be provided. Network control panel workstation/tester port other than RS-232,shall be converted to RS-232, including cabling and power supply, and shall be permanently installed in the panel.

c. Primary Network Port. The network control panel shall either have a built in primary network Port or be capable of accepting a primary network port expansion card for future networking to a base wide utility monitoring and control system (UMCS). The primary network port expansion card shall be either Ethernet (IEEE802.3) or ARCNET.

2.14.1.3 Memory and Real Time Clock (RTC) Backup

The network control panel memory and real time clock functions shall continue to operate for a minimum of 72 hours in the event of a power failure. If rechargeable batteries are provided, automatic charging of batteries shall be provided. Whenever a either a permanent workstation/tester or portable workstation/tester is monitoring the network control panel, a low battery alarm message shall be sent to it.

2.14.1.4 Duplex Outlet

A single phase, 120 Vac electrical service outlet for use with test equipment shall be furnished either inside or within 6 feet of the network control panel enclosure.

2.14.1.5 Locking Enclosures

Locking type mounting cabinets with common keying shall be furnished for each network control panel.

2.14.1.6 Failure Mode

Upon failure of the network control panel, either due to failure of the network control panel hardware or of the manufacturers control network, the network control panel shall revert to the failure mode as shown.

a. Manufacturers Control Network Failure: Upon failure of the manufacturers control network, the network control panel shall operate in an independent stand-alone mode.

b. Network Control Panel Hardware Failure: Upon failure of the network control panel hardware, the network control panel shall cease

operation and stop communications with other network control panels, RIUs, unitary controllers and universal programmable controllers connected to the affected network control panel. The affected network control panel shall respond to this failure as specified and shown.

2.14.2 RIU

The RIU shall be functionally a part of the network control panel as specified, but may be remotely located from the network control panel and communicate over a dedicated communication circuit. When remotely located, the I/O functions shall be subject to the same requirements as for the network control panel hardware. RIUs shall be used to connect remote inputs and outputs to a network control panel and shall contain all necessary I/O functions to connect to field sensors and control devices. RIU operation shall be fully supervised by the network control panel to detect failures. Each RIU shall have a minimum of 10 % of its I/O functions as spare capacity. The type of spares shall be in the same proportion as the implemented I/O functions on the RIU, but in no case shall there be less than two spare points of each type. The RIU shall be furnished complete, with no changes or additions necessary to support implementation of spare functions. Output relays associated with digital signals shall be considered part of the I/O function, whether physically mounted in the enclosure or separately mounted. Implementation of spare points by others shall require only providing the additional field sensor or control device, field wiring including connection to the system, and point definition assignment by the operator. The RIU shall either report the status of all connected points on each scan, or report the status of all points which have changed state or value since the previous scan.

2.14.2.1 Integral Features

The RIU shall include:

a. Main power switch.

b. Power on indicator.

c. Portable workstation/tester port, connector, and if necessary power supply.

d. Manufacturers control network port.

e. On-Off-Auto switches for each DO which controls a device. These switches shall be mounted in the RIU, with the exception of motors, for which the switch shall be mounted at the motor control center. On-Off-Auto switches are not required for DO associated with a status or alarm such as pilot lights. The status of these switches shall be available to the RIU for further processing.

f. Minimum-Maximum-Auto switches, or Auto-Manual switches with manual output override, for each AO. The status of these shall be available to the panel for further processing.

g. An intrusion detection device, connected as an alarm.

2.14.2.2 Duplex Outlet

A single phase, 120 Vac electrical service outlet for use with test equipment shall be furnished either inside or within 6 feet of the RIU.

2.14.2.3 Locking Enclosures

Locking type mounting cabinets with common keying shall be furnished for each RIU.

2.14.2.4 Failure Mode

Upon failure of the RIU, either due to failure of the RIU hardware or of the DTS, the RIU shall revert to the failure mode shown.

2.14.3 Universal Programmable Controller (UPC)

The universal programmable controller shall be a microprocessor based controller designed and programmed to control and monitor systems as shown. Resident programs shall be contained in reprogramable nonvolatile memory. Each universal programmable controller shall contain necessary power supplies, transformers, memory, I/O functions and communications interfaces necessary to perform its required functions and to provide control and monitoring of connected equipment and devices. It shall contain all necessary I/O functions to connect to field sensors and controls. I/O operation shall be fully supervised to detect I/O function failures. It shall provide for operation as a device connected to the system via the manufacturers control network.

2.14.3.1 Integral Features

The universal programmable controller shall include as a minimum:

a. Main power switch.

b. Power on indicator.

c. Portable workstation/tester port, connector, and if necessary power supply.

d. Manufacturers control network port.

e. I/O functions

(1) 8 DI

(2) 4 DO

(3) 8 AI

(4) 4 AO

(5) 1 PA

f. On-Off-Auto switches for each DO which controls a device. These switches shall be mounted in the universal programmable controller, with the exception of motors, for which the switch shall be mounted at the motor control center. On-Off-Auto switches are not required for DO associated with a status or alarm such as pilot lights. The status of these switches shall be available to the panel for further processing.

g. Minimum-Maximum-Auto switches, or Auto-Manual switches with manual output override, for each AO. The status of these shall be available to

the panel for further processing.

2.14.3.2 Communication Interfaces

The UPC shall have the following communication capabilities which shall function simultaneously.

a. Manufacturers Control Network. The manufacturers control network communications interface for a data transmission systems (DTS) circuit between the UPC and a network control panels shall be provided. The DTS will provide for transmission speeds necessary to comply with performance requirements specified. DTS equipment shall be installed in the UPC Panel enclosure.

b. Portable Workstation/Tester Port. A communications port for interfacing to a portable workstation/tester shall be provided. A UPC workstation/tester port other than RS-232, shall be converted to RS-232, including cabling and power supply, and shall be permanently installed in the panel.

2.14.3.3 Memory and RTC Backup

The UPC memory and real time clock functions shall continue to operate for a minimum of 72 hours in the event of a power failure. If rechargeable batteries are provided, automatic charging of batteries shall be provided. Whenever a either a permanent workstation/tester or portable workstation/tester is monitoring the network control panel, a low battery alarm message shall be sent to it.

2.14.3.4 Specific Requirements

Each universal programmable controller shall be accessible for purposes of application selection, control parameters, set point adjustment, and monitoring from any DDC controller connected to the same manufacturers control network as the universal programmable controller. This shall be done using a portable workstation/tester connected to a portable workstation/tester port either directly or via modem.

2.14.3.5 Locking Enclosures

Locking type mounting cabinets with common keying shall be furnished for each enclosure.

2.14.3.6 Failure Mode

Upon failure of the universal programmable controller, it shall revert to the failure mode of operation as shown.

2.14.4 Unitary Controller

The unitary controller shall be a microprocessor based, stand-alone, dedicated purpose controller, communicating with the network control panel, designed and programmed to control air distribution system mixing boxes, terminal units, heat pumps, fan coil units, self-contained DX units or VAV boxes as shown. Each unitary controller shall contain resident programs in nonvolatile memory for each specific application implemented. Each unitary controller shall contain necessary power supplies, transformers, memory, I/O functions and communications interfaces necessary to perform its required functions and to provide control and monitoring of connected

equipment and devices. It shall contain all necessary I/O functions to connect to field sensors and controls. I/O operation shall be fully supervised to detect I/O function failures and shall provide for operation as a device connected to the network control panel via the manufacturers control network.

2.14.4.1 Integral Features

The unitary controller shall include:

a. Main power switch.

b. Power on indicator.

c. Portable workstation/tester port, connector, and power supply.

d. Manufacturers control network port.

e. All I/O functions required to implement the requirements as shown.

f. On-Off-Auto switches for each DO which controls a device. These switches shall be mounted in the field panel, with the exception of motors, for which the switch shall be mounted at the motor control center. On-Off-Auto switches are not required for DO associated with a status or alarm such as pilot lights. The status of these switches shall be available to the panel for further processing.

g. Minimum-Maximum-Auto switches, or Auto-Manual switches with manual output override, for each AO. The status of these shall be available to the panel for further processing.

2.14.4.2 Communication Interfaces

The unitary controller shall have the following communication capabilities which shall function simultaneously.

a. Manufacturers Control Network. The manufacturers control network communications interface for a data transmission systems (DTS) circuit between the unitary controller and a network control panel shall be provided. The DTS will provide for transmission speeds necessary to comply with performance requirements specified. DTS equipment shall be installed in the unitary control panel enclosure.

b. Portable Workstation/Tester Port. A communications port for interfacing to a portable workstation/tester shall be provided. A unitary controller workstation/tester port other than RS-232, shall be converted to RS-232, including cabling and power supply, and shall be permanently installed in the panel. For unitary controller applications where the controller is not mounted in an enclosure, such as for fan-coil units or VAV terminal units, a portable conversion device for an RS-232 connection to the portable workstation/tester may be provided.

2.14.4.3 Specific Requirements

Unitary controller components for new air distribution terminal units shall be furnished to the air distribution terminal unit manufacturer for factory mounting and calibration. Existing air distribution terminal units shall be controlled by field installed unitary controllers.

a. Accessibility and Interfaces: Each unitary controller shall be accessible for purposes of application selection, control parameters, set point adjustment, and monitoring using a portable workstation/tester connected to the manufacturers control network. They shall also be accessible with a portable workstation/tester connected to the unitary controller portable workstation/tester port.

b. Air Distribution Terminal Unit Controls - Pressure Independent: Controls shall consist of a transducer for connection to the velocity-sensing device provided by the terminal unit supplier in the primary air entering the terminal unit, a room temperature sensor, a damper actuator, and an adjustable microprocessor-based controller. [[The room temperature sensor shall have occupant setpoint adjustment and temperature display, timed override of unoccupied mode, and a communication port] [_____].] The controller shall operate the damper for cooling and heating and provide control outputs for duct heating coil if applicable. This controller capability shall allow the sequencing of the damper and the heating coil to maintain conditions in the space.

c. Air Distribution Terminal Unit Controls - Pressure Independent with Recirculating Fan: Controls for pressure-independent boxes with recirculating fans shall consist of a transducer for connection to the velocity-sensing device provided by the terminal unit supplier in the primary air entering the terminal unit, a room temperature sensing element, a damper actuator, an adjustable microprocessor-based terminal unit controller, and a switch to operate the recirculation fan, provided by the terminal unit supplier. [[The room temperature sensor shall have occupant setpoint adjustment and temperature display, timed override of unoccupied mode, and a communication port] [_____].] The controller shall operate the damper for cooling and shall provide outputs for controlling the recirculation fan and duct heating coil in sequence for heating.

d. Air Distribution Terminal Unit Damper Actuator: Air distribution terminal unit damper actuator shall open or close the device to which it is connected within 60 seconds. [[The damper actuator shall utilize spring return to fail to the position shown on loss of power or control signal] [_____].]

2.14.4.4 Failure Mode

Upon failure of the unitary controller, it shall revert to the failure mode of operation as shown.

2.14.5 Chiller Control Panel

Chiller control panel shall be microprocessor-based and shall provide, both locally and through the Manufacturers Control Network, the control, monitoring, and safety equipment functions provided by the chiller manufacturer's control panel(s) (two communications ports total). The chiller control panel instrumentation and control ranges and accuracies shall match those of the chiller manufacturer's control devices. The chiller panel shall have a communication port for interface to a Portable Workstation/Tester through either the Manufacturers Control Network or modem for chiller(s) start/stop, chilled water temperature reset, and monitoring of chiller operating status, alarms, and power consumption.

2.14.6 Boiler Control Panel

Boiler control panel shall be microprocessor-based and shall provide, both

locally and through the Manufacturers Control Network, the control, monitoring, and safety equipment functions provided by the boiler manufacturer's control panel(s) (two communications ports total). The boiler control panel instrumentation and controls ranges and accuracies shall match those of the boiler manufacturer's control devices. The boiler panel shall have a communication port for interface to a Portable Workstation/Tester through either the Manufacturers Control Network or modem for boiler(s) and start/stop, boiler water temperature reset, and monitoring of boiler operating status, alarms.

2.14.7 I/O Functions

2.14.7.1 DDC Hardware I/O Functions

I/O Functions shall be provided as part of the DDC system and shall be in accordance with the following:

a. The analog input (AI) function shall monitor each analog input, perform A-to-D conversion, and hold the digital value in a buffer for interrogation. The A-to-D conversion shall have a minimum resolution of 10 bits plus sign. Signal conditioning shall be provided for each analog input. Analog inputs shall be individually calibrated for zero and span, in hardware or in software. The AI shall incorporate common mode noise rejection of 50 dB from 0 to 100 Hz for differential inputs, and normal mode noise rejection of 20 dB at 60 Hz from a source impedance of 10,000 ohms. Input ranges shall be within the range of 4-to-20 mAdc.

b. The analog output (AO) function shall accept digital data, perform D-to-A conversion, and output a signal within the range of 4-to-20 mAdc. D-to-A conversion shall have a minimum resolution of eight bits plus sign. Analog outputs shall be individually calibrated for zero and span. Short circuit protection on voltage outputs and open circuit protection on current outputs shall be provided. [[An individual gradual switch for manual override of each analog output and means of physically securing access to these switches shall be provided. Each AO shall have a three-position switch for selection of the DDC control signal, no control, or a locally generated control signal for connection to the controlled device. Feedback shall be provided to the system as to the status of the output (manual control or automatic). Switches for pneumatic control outputs shall provide a connection for an externally generated pneumatic signal. All switches shall be either of a key operated design with the same keying system used for other outputs or otherwise suitably protected from unauthorized access] [_____].]

c. The digital input (DI) function shall accept on-off, open-close, or other change of state (two state data) indications. Isolation and protection against an applied steady-state voltage up to 180 Vac peak shall be provided.

d. The digital output (DO) function shall provide contact closures for momentary and maintained operation of output devices. Closures shall have a minimum duration of 0.1 second. DO relays shall have an initial breakdown voltage between contacts and coil of at least 500 V peak. Electromagnetic interference suppression shall be furnished on all output lines to limit transients to nondamaging levels. Protection against an applied steady-state voltage up to 180 Vac peak shall be provided. Minimum contact rating shall be one ampere at 24 Vac. [[Key locked HOA switches shall be provided for manual override of each digital output. Feedback shall be provided to the system as to the status of the output (manual

control or automatic). Switches shall be common keyed] [_____].]

e. The pulse accumulator function shall have the same characteristics as the DI. In addition, a buffer shall be provided to totalize pulses and allow for interrogation by the DDC system. The pulse accumulator shall accept rates up to 20 pulses per second. The totalized value shall be reset to zero upon operator's command.

f. Signal conditioning for sensors shall be provided as specified.

g. The binary coded decimal (BCD) function: The BCD function shall have the same characteristics as the DI, except that, in addition, a buffer shall be provided to totalize inputs and allow for interrogation by the network control panel. The BCD function shall have 16-channel optically isolated buffered inputs to read four digit numbers. The BCD function shall accumulate inputs at rates up to 10 inputs per second.

2.14.7.2 Failure Mode

Upon failure of the I/O function, including data transmission failure, logic power supply failure, DDC processor malfunction, software failure, interposing relay power failure, or any other failure which prevents stand alone operation of any DDC normally capable of stand alone operation, connected outputs shall be forced to the failure mode shown.

2.14.8 Portable Workstation/Tester

A portable workstation/tester shall be provided and shall be able to connect to any DDC hardware. The portable workstation/tester shall consist of a portable computer with a nominal 10 inch active color matrix liquid crystal display, capable of displaying up to 256 colors at a minimum resolution of 640 X 480 pixels, an external VGA monitor port, 32 bit microprocessor operating at a minimum of 100 MHZ. The portable workstation/tester shall have, as a minimum, a 1200 MB hard drive, 16 megabytes of memory, integral pointing device, serial and parallel ports, color VGA video port for an external color monitor, 3.5 inch floppy disk drive, modem, PCMCIA type 3 slot, rechargeable battery, battery charger and 120 Vac power supply. It shall include carrying case, extra battery, charger and a compatible network adapter. The workstation/tester shall:

a. Run DDC diagnostics.

b. Load all DDC memory resident programs and information, including parameters and constraints.

c. Display any AI, DI, AO, DO, or PA point in engineering units for analog points or status for digital points.

d. Control any AO or DO.

e. Provide an operator interface, contingent on password level, allowing the operator to use full English language words and acronyms, or an object oriented graphical user interface.

f. Display database parameters.

g. Modify database parameters.

h. Accept DDC software and information for subsequent loading into a

specific DDC. Provide all necessary software and hardware required to support this function, including an EIA ANSI/EIA/TIA-232-F port.

i. Disable/enable each DDC.

j. Perform all workstation functions as specified.

2.14.9 Central Workstation/Tester

A central workstation/tester shall be provided and shall be able to communicate any network control panel via the primary network. The central workstation/tester shall be functionally equivalent to the portable workstation/tester but is intended to be a stationary unit. The central workstation/tester shall consist of a central computer with a nominal 14 inch VGA color display, capable of displaying up to 256 colors at a minimum resolution of 640 X 480 pixels, 32 bit microprocessor operating at a minimum of 100 MHZ. The central workstation/tester shall have, as a minimum, a 2100 MB hard drive, 32 megabytes of memory, integral pointing device, serial and parallel ports, color VGA video port for an external color monitor, 3.5 inch floppy disk drive, modem, PCMCIA type three slot, rechargeable battery, battery charger, 120 Vac power supply and network adapter (Ethernet IEEE802.3 or ARCNET). The central workstation/tester shall:

a. Run DDC diagnostics.

b. Load all DDC memory resident programs and information, including parameters and constraints.

c. Display any AI, DI, AO, DO, or PA point in engineering units for analog points or status for digital points.

d. Control any AO or DO.

e. Provide an operator interface, contingent on password level, allowing the operator to use full English language words and acronyms, or an object oriented graphical user interface.

f. Display database parameters.

g. Modify database parameters.

h. Accept DDC software and information for subsequent loading into a specific DDC. Provide all necessary software and hardware required to support this function, including an EIA ANSI/EIA/TIA-232-F port.

i. Disable/enable each DDC.

j. Perform all workstation functions as specified.

2.14.10 Data Terminal Cabinet (DTC)

The DTC shall be an independent metallic enclosure not physically part of the network control panel/RIU as shown. The DTC shall be sized to accommodate the number of I/O functions required for each network control panel/RIU, including installed spares, plus 10% expansion for each type of I/O function provided. The DTC shall be divided into analog input and output groups and digital input and output groups. The DTC shall be provided with double sided screw type terminal strips. One side of the

terminal strip shall be used for termination of field wiring from instrumentation-mentation and controls. The other side shall be used to connect the DTC to the network control panel/RIU. Terminal strips shall have individual terminal identification numbers. The DTC shall be a locking type mounting enclosure, with common keying and door switch wired to an input for intrusion alarm annunciation at the central station. DTC keying shall be identical to network control panel/RIU keying.

2.15 DDC SOFTWARE

All DDC software described in this specification shall be furnished as part of the complete DDC System.

2.15.1 Operating System

Each DDC shall contain an operating system that controls and schedules that DDC's activities in real time. The DDC shall maintain a point database in its memory that includes all parameters, constraints, and the latest value or status of all points connected to that DDC. The execution of DDC application programs shall utilize the data in memory resident files. The operating system shall include a real time clock function that maintains the seconds, minutes, hours, date and month, including day of the week. Each DDC real time clock shall be automatically synchronized with the network control panel real time clock at least once per day to plus or minus 10 seconds. When the network control panel is connected to a central workstation/tester, the network control panel RTC shall be updated by the central workstation/tester RTC. The time synchronization shall be accomplished without operator intervention and without requiring system shutdown. The operating system shall allow loading of software, data files data entry, and diagnostics from the central workstation/tester both locally through the central workstation/tester port and remotely through a network control panel and the manufacturers control network.

2.15.1.1 Startup

The DDC shall have startup software that causes automatic commencement of operation without human intervention, including startup of all connected I/O functions. A DDC restart program based on detection of power failure at the DDC shall be included in the DDC software. Upon restoration of power to the DDC, the program shall restart equipment and restore loads to the state at time of power failure, or to the state as commanded by time programs or other overriding programs. The restart program shall include start time delays between successive commands to prevent demand surges or overload trips. The startup software shall initiate operation of self-test diagnostic routines. Upon failure of the DDC, if the database and application software are no longer resident or if the clock cannot be read, the DDC shall not restart and systems shall remain in the failure mode indicated until the necessary repairs are made. If the database and application programs are resident, the DDC shall resume operation after an adjustable time delay of from 0 to 600 seconds. The startup sequence for each DDC shall include a unique time delay setting for each control output when system operation is initiated.

2.15.1.2 Operating Mode

Each DDC shall control and monitor functions as specified, independent of communications with other DDC. This software shall perform all DDC functions and DDC resident application programs as specified using data obtained from I/O functions and based upon the DDC real time clock

function. When communications circuits between the DDC are operable, the DDC shall obtain real time clock updates and any required global data values transmitted from other network control panels. The DDC software shall execute commands after performing constraints checks in the DDC. Status and analog values, including alarms and other data shall be transmitted from other network control panels when communications circuits are operable. If communications are not available, each DDC shall function in stand-alone mode and operational data, including the latest status and value of each point and results of calculations, normally transmitted from other network control panels shall be stored for later transmission to the network control panel. Storage for the latest 256 values shall be provided at each network control panel. Each DDC shall accept software downloaded from the network control panel. Constraints shall reside at the DDC.

2.15.1.3 Failure Mode

Upon failure for any reason, each DDC shall perform an orderly shutdown and force all DDC outputs to a predetermined (failure mode) state, consistent with the failure modes shown and the associated control device.

2.15.2 Functions

The Contractor shall provide software necessary to accomplish the following functions, as appropriate, fully implemented and operational, within each network control panel, RIU, unitary controller and universal programmable controller.

a. Scanning of inputs.

b. Control of outputs.

c. Reporting of analog changes outside a selectable differential.

d. Reporting of unauthorized digital status.

e. Reporting of alarms automatically to network control panel.

f. Reporting of I/O status to network control panel upon request.

g. Maintenance of real time, updated by the network control panel at least once a day.

h. Communication with the network control panel.

i. Execution of DDC resident application programs.

j. Averaging or filtering of AIs.

k. Constraints checks (prior to command issuance).

l. Diagnostics.

m. Portable workstation/tester operation as specified.

n. Reset of PA by operator based on time and value.

2.15.2.1 Analog Monitoring

The system shall measure and transmit analog values including calculated

analog points. An analog change in value is defined as a change exceeding a preset differential value as specified. The record transmitted for each analog value shall include a readily identifiable flag which indicates the abnormal status of the value when it deviates from operator selectable upper and lower analog limits. Analog values shall be expressed in proper engineering units with sign. Engineering units conversions shall be provided for each measurement. Each engineering units conversion set shall include range, span, and conversion equation. A vocabulary of engineering unit descriptors shall be provided, using at least three alphanumeric characters to identify information in the system. The system shall support 255 different engineering units.

2.15.2.2 Logic (Virtual) Points

Logic (virtual) points shall be software points entered in the point database which are not directly associated with a physical I/O function. Logic (virtual) points shall be analog or digital points created by calculation from any combination of digital and analog points, or other data having the properties of real points, including alarms, without the associated hardware. Logic (virtual) points shall be defined or calculated and entered into the database by the Contractor. The calculated analog point shall have point identification in the same format as any other analog point. The calculated point shall be used in any program where the real value is not obtainable directly. Constants used in calculations shall be changeable on-line by the operator. Calculated point values shall be current for use by the system within 10 seconds of the time of any input changes.

2.15.2.3 State Variables

If an analog point represents more than two (up to eight) specific states, each state shall be nameable. For example, a level sensor shall be displayed at its measured engineering units plus a state variable with named states usable in programs or for display such as low alarm/low/normal/high/high alarm.

2.15.2.4 Analog Totalization

Any analog point shall be operator assignable to the totalization program. Up to eight analog values shall be totalized within a selectable time period. At the end of the period, the totals shall be stored. Totalization shall then restart from zero for the next time period. The program shall keep track of the peak and total value measured during the current period and for the previous period. The operator shall be able to set or reset each totalized value individually. The time period shall be able to be operator defined, modified or deleted on-line.

2.15.2.5 Energy Totalization

The system shall calculate the heat energy in Btus, for each energy source consumed by the mechanical systems specified, totalize the calculated Btus, the instantaneous rate in Btus per hour, and store totals in thousands of Btus (MBtu). The Btus calculated shall be totalized for an adjustable time period. The time period shall be defined uniquely for each Btu totalization.

2.15.2.6 Trending

Any analog or calculated point shall be operator assignable to the trend

program. Up to eight points shall be sampled at individually assigned intervals, selectable between one minute and two hours. A minimum of the most recent 128 samples of each trended point shall be stored. The sample intervals shall be able to be defined, modified, or deleted on-line.

2.15.3 I/O Point Database/Parameter Definition

Each I/O point shall be defined in a database residing in the DDC. The definition shall include all physical parameters associated with each point. Each point shall be defined and entered into the database by the Contractor, including as applicable:

a. Name.

b. Device or sensor type (i.e., sensor, control relay, motors).

c. Point identification number.

d. Unit.

e. Building number.

f. Area.

g. Island.

h. DDC number and channel address.

i. KW (running).

j. KW (starting).

k. Sensor range.

l. Controller range.

m. Sensor span.

n. Controller span.

o. Engineering units conversion (scale factor).

p. Setpoint (analog).

q. High reasonableness value (analog).

r. Low reasonableness value (analog).

s. High alarm limit differential (return to normal).

t. Low alarm limit differential (return to normal).

u. High alarm limit (analog).

v. Low alarm limit (analog).

w. Alarm disable time period upon startup or change of setpoint.

x. Analog change differential (for reporting).

y. Alarm class and associated primary message text.

z. High accumulator limit (pulse).

aa. Status description.

bb. Run time target.

cc. Failure mode as specified and shown.

dd. Constraints as specified.

2.15.4 Alarm Processing

Each DDC shall have alarm processing software for AI, DI, and PA alarms for all real and virtual points connected to that DDC.

2.15.4.1 Digital Alarms Definition

Digital alarms are those abnormal conditions indicated by DIs as specified and shown.

2.15.4.2 Analog Alarms Definition

Analog alarms are those conditions higher or lower than a defined value, as measured by an AI. Analog readings shall be compared to predefined high and low limits, and alarmed each time a value enters or returns from a limit condition. Unique high and low limits shall be assigned to each analog point in the system. Analog alarm limits shall be stored in the DDC database. Each analog alarm limit shall have an associated unique limit differential specifying the amount by which a variable must return into the proper operating range before being annunciated as a return-to-normal-state. All limits and differentials shall be entered on-line by the operator in limits of the measured variable, without interruption or loss of monitoring of the point concerned. The program shall automatically change the high or low limits or both, of any analog point, based on time scheduled operations as specified, allowing for a time interval before the alarm limit becomes effective. In CPA applications, key the limit to a finite deviation traveling with the setpoint. The system shall automatically suppress analog alarm reporting associated with a digital point when that digital point is turned off.

2.15.4.3 Pulse Accumulator Alarms Definition

Pulse accumulator alarms are those conditions calculated from totalized values of accumulator inputs or PA input rates that are outside defined limits as specified and shown. PA totalized values shall be compared to predefined limits and alarmed each time a value enters a limit condition. Unique limits shall be assigned to each PA point in the system. Limits shall be stored in the DDC database.

2.15.5 Constraints

2.15.5.1 Equipment Constraints Definitions

Each control point in the database shall have DDC resident constraints defined and entered by the Contractor, including as applicable:

a. Maximum starts (cycles) per hour.

b. Minimum off time.

c. Minimum on time.

d. High limit (value in engineering units).

e. Low limit (value in engineering units).

2.15.5.2 Constraints Checks

Control devices connected to the system shall have the DDC memory resident constraints checked before each command is issued to insure that no equipment damage will result from improper operation. Each command shall be executed by the DDC only after all constraints checks have been passed. Each command point shall have unique constraints assigned. High and low "reasonableness" values or one differential "rate-of-change" value shall be assigned to each AI. Values outside the reasonableness limits shall be rejected and an alarm message sent to the network control panel or portable workstation/tester. Status changes and analog point values shall be reported to the workstation upon operator request, such as for reports, alphanumeric displays, graphic displays, and application programs. Each individual point shall be capable of being selectively disabled by the operator from a workstation/tester. Disabling a point shall prohibit monitoring and automatic control of that point.

2.15.6 Diagnostics

Each DDC shall have self-test diagnostic routines implemented in firmware. The tests shall include routines that exercise memory. Diagnostic software shall be usable in conjunction with the central workstation/tester and portable workstation/tester. The software shall display messages in English to inform the tester's operator of diagnosed problems.

2.15.7 Summer-Winter Operation Monitoring

The system shall provide software to automatically change the operating parameters, monitoring of alarm limits, and start-stop schedules for each mechanical system from summer to winter and vice-versa. The software shall provide automatic commands to applications programs to coordinate proper summer or winter operation. Change over setpoints shall be operator selectable and settable.

2.15.8 Control Sequences and Control Loops

Sufficient memory shall be provided to implement the requirements specified and shown for each DDC. Specific functions to be implemented are defined in individual system control sequences and database tables shown in the drawings, and shall include, as applicable, the following:

a. PI Control: This function shall provide proportional control and proportional plus integral control.

b. Two Position Control: This function shall provide control for a two state device by comparing a set point against a process variable and an established deadband.

c. Floating Point Control: This function shall exercise control when

an error signal exceeds a selected deadband, and shall maintain control until the error is within the deadband limits.

d. Signal Selection: This function shall allow the selection of the highest or lowest analog value from a group of analog values as the basis of control. The function shall include the ability to cascade analog values so that large numbers of inputs can be reduced to one or two outputs.

e. Signal Averaging: This function shall allow the mathematical calculation of the average analog value from a group of analog values as the basis of control. The function shall include the ability to "weight" the individual analog values so that the function output can be biased as necessary to achieve proper control.

f. Reset Function: This function shall develop an AO based on up to two AIs and one operator specified reset schedule.

g. Cooling/Heating Operation Program: Software shall be provided to change, either automatically or on operator command, the operating parameters, monitoring of alarm limits, and start-stop schedules for each mechanical system where such a change from cooling to heating and vice versa is meaningful. The software shall provide commands to application programs to coordinate cooling or heating mode operation. Software shall automatically switch facilities from cooling to heating, and vice versa, based on schedules or temperatures. All HVAC equipment and systems shall be assigned to the program.

2.15.9 Command Priorities

A scheme of priority levels shall be provided to prevent interaction of a command of low priority with a command of higher priority. The system shall require the latest highest priority command addressed to a single point to be stored for a period of time longer than the longest time constraint in the on and off states, insuring that the correct command shall be issued when the time constraint is no longer in effect or report the rejected command. Override commands entered by the operator shall have higher priority than those emanating from applications programs.

2.15.10 Resident Application Software

The Contractor shall provide resident applications programs to achieve the sequences of operation, parameters, constraints, and interlocks necessary to provide control of the systems connected to the DDC system. Application programs shall be resident and shall execute in the DDC, and shall coordinate with each other, to insure that no conflicts or contentions remain unresolved. The Contractor shall coordinate the application programs specified with the equipment and controls operation, and other specified requirements. A scheme of priority levels shall be provided to prevent interaction of a command of low priority with a command of higher priority. The system shall require the latest highest priority command addressed to a single point to be stored for a period of time longer than the longest time constraint in the ON and OFF states, insuring that the correct command shall be issued when the time constraint is no longer in effect or the rejected command shall be reported. Override commands entered by the operator shall have higher priority than those emanating from application programs.

2.15.10.1 Program Inputs and Outputs

The Contractor shall select the appropriate program inputs listed for each application program to calculate the required program outputs. Where the specific program inputs are not available, a "default" value or virtual point appropriate for the equipment being controlled and the proposed sequence of operation shall be provided to replace the missing input, thus allowing the application program to operate. AIs to application programs shall have an operator adjustable deadband to preclude short cycling or hunting. Program outputs shall be real analog or digital outputs or logic (virtual) points as required to provide the specified functions. The Contractor shall select the appropriate input and output signals to satisfy the requirements for control of systems as shown.

2.15.10.2 DDC General Conditions

The Contractor shall provide software required to achieve the sequences of operation, parameters, constraints, and interlocks shown. Application software shall be resident in the DDC in addition to any other required software. In the event of a DDC failure, the controlled equipment shall continue to function in the failure mode shown.

2.15.10.3 Scheduled Start/Stop Program

This program shall start and stop equipment based on a time of day schedule for each day of the week, and on a holiday schedule. To eliminate power surges, an operator adjustable time delay shall be provided between consecutive start commands.

a. Program Inputs:

(1) Day of week/holiday.

(2) Time of day.

(3) Cooling and heating high-low alarm limits.

(4) Cooling and heating start-stop schedules.

(5) Cooling or heating mode of operation.

(6) Equipment status.

(7) Equipment constraints.

(8) Consecutive start time delay.

b. Program Outputs: Start/stop signal.

2.15.10.4 Optimum Start/Stop Program

This program shall start and stop equipment as specified for the scheduled start/stop program, but shall include a sliding schedule based on indoor and outdoor air conditions. The program shall take into account the thermal characteristics of the structure, and indoor and outdoor air conditions, using prediction software to determine the minimum time of HVAC system operation needed to satisfy space environmental requirements at the start of the occupied cycle, and determine the earliest time for stopping equipment at the day's end without exceeding space environmental requirements. An adaptive control algorithm shall be utilized to automatically adjust the constants used in the program.

a. Program Inputs:

(1) Day of week/holiday.

(2) Time of day.

(3) Cooling or heating mode of operation.

(4) Equipment status.

(5) Cooling and heating building occupancy schedules.

(6) Space temperature.

(7) Building heating constant (operator adjustable and automatically optimized).

(8) Building cooling constant (operator adjustable and automatically optimized).

(9) OA temperature.

(10) Required space temperature at occupancy (heating).

(11) Required space temperature at occupancy (cooling).

(12) Equipment constraints.

(13) Cooling and heating high-low alarm limits.

b. Program Outputs: Start/stop signal.

2.15.10.5 Day-Night Setback Program

The software shall limit the rise or drop of space temperature (or specified fluid temperature) during unoccupied hours. Whenever the space temperature (or specified fluid temperature) is above (or below for heating) the operator assigned temperature limit, the system shall be turned on until the temperature is within the assigned temperature limit.

a. Program Inputs:

(1) Day of week.

(2) Time of day.

(3) Cooling or heating mode of operation.

(4) Cooling and heating occupancy schedules.

(5) Equipment status.

(6) Space temperature (or specified fluid temperature).

(7) Minimum space temperature (or specified fluid temperature) during unoccupied periods.

(8) Maximum space temperature (or specified fluid temperature)

during unoccupied periods.

(9) Equipment constraints.

b. Program Outputs: Start/stop signal.

2.15.10.6 Economizer Program I

The software shall reduce the HVAC system cooling requirements when the OA dry bulb temperature is less than the return air temperature. When the OA dry bulb temperature is above the return air temperature or changeover setpoint, the OA dampers, return air dampers, and relief air dampers shall be positioned to provide minimum required OA. When the OA dry bulb temperature is below a changeover setpoint temperature, the OA dampers, return air dampers, and exhaust air dampers shall be positioned to maintain the required mixed air temperature.

a. Program Input:

(1) Changeover conditions.

(2) OA dry bulb temperature.

(3) RA dry bulb temperature.

(4) Mixed air dry bulb temperature.

(5) Equipment constraints.

b. Program Output: Damper actuator/cooling control signal.

2.15.10.7 Ventilation/Recirculation and Flush Programs

The software shall reduce the HVAC system thermal load for two modes of operation and provide for flushing of the building as follows:

a. Ventilation mode: In this mode, the system shall precool the space prior to building occupancy. When the outside air temperature is lower than the space temperature, the outside air damper and exhaust air damper shall open to their maximum positions and the return air damper shall close to its minimum position.

b. Recirculation mode: In this mode, the system shall preheat the space prior to building occupancy. When the outside air temperature is lower than the space temperature, the outside air damper and the exhaust air damper shall close to their minimum positions and the return air damper shall open to its maximum position.

c. Flush mode: The software shall use the HVAC supply system to provide 100% outside air for ventilation purpose and flush building spaces. The network control panel shall modulate the control valves to maintain the air supply temperature setpoints while the flush program is in effect. The flush mode shall be manually initiated and have the highest priority (it shall override all other programs). The outside air damper and the exhaust air damper shall be closed at other times during unoccupied periods, except for economizer operation during day/night setback periods. For systems without mechanical cooling, this program shall, in addition to the above requirements, act as an economizer. The outside, return, and exhaust air dampers shall be modulated to maintain the required mixed air

temperature setpoint. When this program is released, the outside and exhaust air dampers shall return to their minimum positions, and the return air damper shall return to its maximum position.

d. Program Inputs:

(1) Day of week.

(2) Time of day.

(3) Cooling or heating mode of operation.

(4) Equipment status.

(5) Cooling and heating occupancy schedules.

(6) OA dry bulb temperature.

(7) Space temperature.

(8) Equipment constraints.

e. Program Output: Damper actuator control signal.

2.15.10.8 Hot Deck/Cold Deck Temperature Reset Program

The software shall use space, mixed air, and deck temperatures to calculate the hot deck/cold deck temperature setpoints in dual duct and multizone HVAC systems. The program shall select the zones with the greatest heating and cooling requirements; establish the HVAC minimum hot and cold deck temperature differentials required to meet the zone temperatures; modulate valves to maintain deck temperature setpoints; and modulate zone dampers to maintain space temperature setpoints, without exceeding space humidity limits (where shown).

a. Program Inputs:

(1) Space temperature setpoint.

(2) Space humidity limit (where shown).

(3) Mixing box damper position or proportional signal from primary element.

(4) Hot deck temperature.

(5) Cold deck temperature.

(6) Zone temperatures (where shown).

(7) Space RH (where shown).

(8) Minimum space temperature during occupied periods.

(9) Maximum space temperature during occupied periods.

(10) Equipment constraints.

b. Program Outputs:

(1) Hot deck valve actuator control signal.

(2) Cold deck valve actuator control signal.

(3) Zone damper or mixing box actuator control output signal.

2.15.10.9 Reheat Coil Reset Program

The software shall select the zone with the least amount of heat required. The program shall reset the cold deck discharge temperature upward until it satisfies the zone with the lowest demand, or until the zone humidity control requirements cannot be met.

a. Program Inputs:

(1) Zone RH high limit.

(2) Zone temperature (where shown).

(3) Zone RH (where shown).

(4) Cold deck temperature.

(5) Reheat coil valve positions or proportional signals from primary elements.

(6) Minimum space temperature during occupied periods.

(7) Maximum space temperature during occupied periods.

(8) Equipment constraints.

b. Program Output: Cold deck valve actuator control signal.

2.15.10.10 Heating and Ventilating Unit Program

The software shall control hot water/steam coil valve position to maintain space/supply air temperatures for heating and ventilating units. This program shall be coordinated with the ventilation-recirculation program for damper control and the scheduled or optimum start-stop program for fan control.

a. Program Inputs

(1) Space temperature.
(2) Space temperature setpoint.
(3) Supply air temperature.
(4) Supply air temperature setpoint.

b. Program Outputs

(1) Heating or steam coil valve actuator control signal.
(2) Damper actuator control signal.

2.15.10.11 Air Volume Control Program

The software shall monitor supply and return/exhaust air flow volumes and modulate fan controls to maintain required air flow volumes and/or ratio or

fixed differential of supply to return air flows. This program shall be coordinated with the ventilation-recirculation program and the economizer program for damper control and with static pressure control requirements for fan control.

a. Program Inputs

(1) Supply air flow.
(2) Return/exhaust air flow.
(3) Required supply air flow - high and low limits.
(4) Required return/exhaust air flow - high and low limits.
(5) Volume offset or ratio, as appropriate.

b. Program Outputs

(1) Supply fan volume control.
(2) Return/exhaust fan volume control.

2.15.10.12 Air Distribution Unitary Controller Software

Software shall be provided for the management and control of the air distribution terminal units. Software shall allow for operator definition of multiple air distribution terminal units as functional groups which may be treated as a single entity; monitoring, alarming and reporting of terminal unit parameters on an individual or group basis; and remote setpoint adjustment on an individual or group basis.

a. Functions:

(1) Volume control in response to temperature.
(2) Volume flow limits, minimum and maximum.
(3) Occupied and unoccupied operation with associated temperature and volume limits.
(4) Temperature setpoint override.

b. Program Inputs

(1) Space temperature.
(2) Space temperature setpoint.
(3) Space temperature setpoint limits.
(4) Supply airflow volume.
(5) Supply airflow volume high and low limits.

c. Program Outputs

(1) Supply volume control signal.
(2) Auxiliary fan start/stop signal.
(3) Supplemental heat control signal.

2.15.10.13 Chiller Selection Program

Chiller program shall be used for chiller selection as well as control and monitoring of chillers. The software shall select the most efficient chiller or combination of chillers based on chiller operating data to satisfy the cooling load. Based on chiller operating data, energy input vs chilled water output, the chiller with the highest efficiency shall be selected to satisfy the cooling load calculated by prediction software. The program shall calculate equipment electrical energy input based on percent full load, current, or other inputs provided, and equipment

nameplate data. The program shall prevent the chiller from going to full load for a predetermined period to allow the system to stabilize, in order to determine the actual cooling load. The program shall follow the chiller manufacturer's startup and shutdown sequence requirements. Interlocks between chilled water pumps, condenser water pumps, and chiller shall be in accordance with the chiller manufacturer's requirements.

a. Program Inputs

(1) Efficiency curves.
(2) Chiller water supply temperatures.
(3) Chiller water return temperatures.
(4) Chiller water flows.
(5) Entering condenser water temperatures.
(6) Leaving condenser water temperatures.
(7) Condenser water flows.
(8) Instantaneous KW to chillers.
(9) Instantaneous KW to chilled water pumps (if variable).
(10) Instantaneous KW to condenser water pumps (if variable).
(11) Instantaneous KW to cooling tower fans (if variable).
(12) Common chilled water supply temperatures.
(13) Common chilled water return temperatures.
(14) Total chilled water flow.
(15) Chilled water pumps status.
(16) Refrigerant pressure, suction and discharge.
(17) Equipment constraints.
(18) Steam flow.

b. Program Outputs

(1) Start/stop signals for chillers (manual or automatic to control panel).
(2) Start/stop signals for chilled water pumps (manual or automatic to control panel).
(3) Start/stop signals for condenser water pumps (manual or automatic to control panel).
(4) Start/stop signals for cooling tower fans (manual or automatic to control panel).
(5) Chilled water supply temperature setpoint control signal.
(6) Chiller efficiency.

2.15.10.14 Absorption Chiller Efficiency and Monitoring Program

Chiller program shall be used for monitoring of chillers and to calculate chiller efficiency. The program shall calculate equipment efficiency based on energy input and output and other inputs provided.

a. Program Inputs

(1) Efficiency curves.
(2) Chiller water supply temperatures.
(3) Chiller water return temperatures.
(4) Chiller water flows.
(5) Entering condenser water temperatures.
(6) Leaving condenser water temperatures.
(7) Condenser water flows.
(8) Instantaneous steam to chillers.
(9) Instantaneous KW to chilled water pumps (if variable).
(10) Instantaneous KW to condenser water pumps (if variable).

(11) Instantaneous KW to cooling tower fans (if variable).
(12) Common chilled water supply temperatures.
(13) Common chilled water return temperatures.
(14) Total chilled water flow.
(15) Chilled water pumps status.
(16) Refrigerant pressure, suction and discharge.
(17) Equipment constraints.
(18) Steam pressure.
(19) Steam flow.

b. Program Outputs

(1) Chilled water supply temperatures setpoint control signal.
(2) Chiller efficiency.

2.15.10.15 Chilled Water Temperature Reset Program

The software shall reset the chilled water temperature supplied by a water chiller. The program shall reset the chilled water temperature upward or downward to meet the required space temperature or humidity setpoints. The program shall monitor the positions of the chilled water control valves (percent of opening) and space temperatures.

a. Program Input:

(1) Chilled water valve position.
(2) High limit for space dry bulb temperature.
(3) Chiller supply water temperature.
(4) High chilled water operating temperature.
(5) Low chilled water operating temperature.
(6) High limit for space RH.
(7) Equipment constraints.

b. Program Output: Chilled water supply temperature setpoint control signal.

2.15.10.16 Condenser Water Temperature Reset Program

The software shall reset the condenser water temperature from a fixed temperature downward when the OA wet bulb temperature will produce lower condenser water temperature. Program shall be coordinated with the chiller control loop algorithms for chiller supply, return water temperatures and safety interlocks.

a. Program Inputs:

(1) Maximum condenser water operating temperature.
(2) Minimum condenser water operating temperature.
(3) Condenser water supply temperature.
(4) OA dry bulb temperature.
(5) OA RH.
(6) Condenser water cooling equipment thermal approach characteristics.
(7) Equipment constraints.

b. Program Output: Condenser water supply temperature setpoint control signal.

2.15.10.17 Chiller Demand Limit Program

The software shall limit maximum available chiller cooling capacity in fixed steps as shown to limit electrical demand. Each fixed step shall be considered as one point in the demand limiting program. Each chiller demand control step shall be assigned an equipment priority level.

a. Program Inputs:

(1) Chiller percent capacity.
(2) Minimum cooling capacity.
(3) Equipment priority schedules.
(4) Equipment constraints.

b. Program Output

(1) Calculated percent load point.
(2) Control signal to chiller controller/panel, new setpoint (manual or automatic as shown).

2.15.10.18 Hot Water OA Reset Program

The software shall reset the hot water temperature supplied by the boiler or converter in accordance with the OA temperature or other specified independent- dent variable. The hot water supply temperature shall be reset downward or upward from a fixed temperature proportionally, as a function of OA temperature or other specified independent variable.

a. Program Inputs

(1) Reset schedule.
(2) OA dry bulb temperature or other specified independent variable.
(3) Hot water supply temperature.
(4) Maximum hot water supply temperature.
(5) Minimum hot water supply temperature.
(6) Equipment constraints.

b. Program Output: Valve actuator control signal.

2.15.10.19 Boiler Monitoring and Control

The software shall remotely monitor and control boiler operation based on boiler operational data. The program shall monitor inputs and discontinue boiler operation if any monitored point exceeds a predetermined value or changes status incorrectly. The operator shall be able to add or delete individual program input points from the list of points that will discontinue boiler operation.

a. Program Inputs

(1) Fuel flow.
(2) Fuel pressure (natural gas).
(3) Fuel temperature (heated fuel oil).
(4) Flame status.
(5) Flue gas oxygen.
(6) Flue gas temperature.
(7) Make-up or feed water flow.
(8) Furnace draft.
(9) Flue gas carbon monoxide (for boilers over 20 million BTUs).

(10) Hot water flow.
(11) Hot water pressure.
(12) Hot water supply temperature.
(13) Hot water return temperature.
(14) Hot water BTUs.
(15) Steam flow.
(16) Steam pressure.
(17) Steam temperature.
(18) Steam BTUs.
(19) Feedwater temperature.
(20) Boiler drum level.

b. Program Outputs

(1) Boiler enable/disable control signal.
(2) Boiler enable/disable permission to boiler operator for manual control.
(3) Boiler efficiency.

2.15.10.20 Heat Recovery Boiler Efficiency and Monitoring

The software shall remotely monitor and calculate efficiency of heat recovery boiler operation. The program shall monitor inputs and alarm operator if any monitored point exceeds a predetermined value or changes status incorrectly.

a. Program Inputs

(1) Exhaust gas flow (from gas turbine generator) into boiler.
(2) Exhaust gas temperature (from gas turbine generator) into boiler.
(3) Flue gas oxygen.(stack)
(4) Flue gas temperature.(stack)
(5) Make-up flow.
(6) Furnace draft.
(7) Flue gas carbon monoxide (for boilers over 20 million BTUs).
(8) Hot water flow (hot water boilers).
(9) Hot water pressure (hot water boilers).
(10) Hot water supply temperature (hot water boilers).
(11) Hot water return temperature (hot water boilers).
(12) Hot water BTUs (hot water boilers).
(13) Steam flow (steam boilers).
(14) Steam pressure (steam boilers).
(15) Steam BTUs (steam boilers).
(16) Feedwater temperature (steam boilers).
(17) Boiler drum level (steam boilers).
(18) Steam temperature.
(19) Position of diverter valve.

b. Program Output: Heat recovery boiler efficiency

2.15.10.21 Hot Water Distribution Program

The software shall control the hot water distribution temperature to individual building zones. The zone hot water distribution temperature shall be reset downward or upward from a fixed temperature proportionally as a function of OA temperature or other specified independent variable by modulating the respective zone mixing valve. The zone pump shall be stopped when the OA temperature exceeds the specified setpoint. When

parallel pumps are used, the software shall alternate pump operation and shall start the standby pump (after a time delay) upon failure of the operating pump.

a. Program Inputs

(1) Zone hot water distribution temperature.
(2) Reset schedule.
(3) OA dry bulb temperature or other specified independent variable.
(4) Maximum zone hot water distribution temperature.
(5) Zone pump status.
(6) Equipment constraints.

b. Program Outputs

(1) Zone mixing valve control.
(2) Zone pump start/stop signal(s).

2.15.10.22 Domestic Hot Water Generator Program

The software shall control the domestic hot water temperature by adjusting the hot water heating control valve.

a. Program Inputs

(1) Domestic hot water temperature.
(2) Domestic hot water temperature setpoint.

b. Program Output: Hot water heating control valve actuator control signal.

2.15.10.23 Lighting Control Program

The software shall turn lights on and off based on the time of day and the day of week, including holidays. The program shall generate additional commands at operator adjustable intervals to assure that lights are off (relay operated zoned lighting only).

a. Program Inputs

(1) Day of week-holiday.

(2) Time of day.

(3) Cooling and heating start-stop schedules.

(4) Equipment status.

(5) Times of day for additional off commands (where applicable).

b. Program Output: On/off signal.

PART 3 EXECUTION

3.1 GENERAL INSTALLATION CRITERIA

3.1.1 HVAC Control System

The HVAC control system shall be completely installed and ready for operation. Dielectric isolation shall be provided where dissimilar metals are used for connection and support. Penetrations through and mounting holes in the building exterior shall be made watertight. The HVAC control system installation shall provide clearance for control system maintenance by maintaining access space between coils, access space to mixed-air plenums, and other access space required to calibrate, remove, repair, or replace control system devices. The control system installation shall not interfere with the clearance requirements for mechanical and electrical system maintenance.

3.1.2 Software Installation

Software shall be loaded for an operational system, including databases for all points, operational parameters, and system, command, and application software. The Contractor shall provide original and backup copies of source, excluding the general purpose operating systems and utility programs furnished by computer manufacturers and the non-job-specific proprietary code furnished by the system manufacturer, and object modules for software on each type of media utilized, within 30 days of formal Government acceptance. In addition, a copy of individual floppy disks of software for each DDC panel shall be provided.

3.1.3 Device Mounting Criteria

Devices mounted in or on piping or ductwork, on building surfaces, in mechanical/electrical spaces, or in occupied space ceilings shall be installed in accordance with manufacturer's recommendations and as shown. Control devices to be installed in piping and ductwork shall be provided with required gaskets, flanges, thermal compounds, insulation, piping, fittings, and manual valves for shutoff, equalization, purging, and calibration. Strap-on temperature sensing elements shall not be used except as specified.

3.1.4 Wiring Criteria

Wiring external to control panels, including low-voltage wiring, shall be installed in metallic raceways. [Nonmetallic-sheathed cables or metallic-armored cables may be installed in areas permitted by NFPA 70] [_____] Wiring shall be installed without splices between control devices and DDC panels. Instrumentation grounding shall be installed as necessary to prevent ground loops, noise, and surges from adversely affecting operation of the system. Ground rods installed by the contractor shall be tested as specified in IEEE Std 142. Cables and conductor wires shall be tagged at both ends, with the identifier shown on the shop drawings. Electrical work shall be as specified in Section 16415A ELECTRICAL WORK, INTERIOR and as shown.

3.2 CONTROL SYSTEM INSTALLATION

3.2.1 Damper Actuators

Actuators shall not be mounted in the air stream. Multiple actuators operating a common damper shall be connected to a common drive shaft. Actuators shall be installed so that their action shall seal the damper to the extent required to maintain leakage at or below the specified rate and shall move the blades smoothly.

3.2.2 Local Gauges for Actuators

Pneumatic actuators shall have an accessible and visible receiver gauge installed in the tubing lines at the actuator as shown.

3.2.3 Room Instrument Mounting

Room instruments , such as wall mounted thermostats, shall be mounted 60 inches above the floor unless otherwise shown. Temperature setpoint devices shall be recess mounted.

3.2.4 Freezestats

For each 20 square feet of coil face area, or fraction thereof, a freezestat shall be provided to sense the temperature at the location shown. Manual reset freezestats shall be installed in approved, accessible locations where they can be reset easily. The freezestat sensing element shall be installed in a serpentine pattern.

3.2.5 Averaging Temperature Sensing Elements

Sensing elements shall have a total element minimum length equal to 1 linear foot per square foot of duct cross-sectional area.

3.2.6 Foundations and Housekeeping Pads

Foundations and housekeeping pads shall be provided for the HVAC control system air compressors.

3.2.7 Compressed Air Stations

The air compressor assembly shall be mounted on vibration eliminators, in accordance with ASME BPVC SEC VIII D1 for tank clearance. The air line shall be connected to the tank with a flexible pipe connector. Compressed air station specialties shall be installed with required tubing, including condensate tubing to a floor drain.

3.2.8 Duct Static Pressure Sensing Elements and Transmitters

The duct static pressure sensing element and transmitter sensing point shall be located at 75% to 100% of the distance between the first and last air terminal units.

3.2.9 Indication Devices Installed in Piping and Liquid Systems

Gauges in piping systems subject to pulsation shall have snubbers. Gauges for steam service shall have pigtail fittings with cock. Thermometers and temperature sensing elements installed in liquid systems shall be installed in thermowells.

3.2.10 Tubing

3.2.10.1 Control System Installation

The control system shall be installed so that pneumatic lines are not exposed to outside air temperatures. All tubes and tube bundles exposed to view shall be installed neatly in lines parallel to the lines of the building. Tubing between panels and actuators in mechanical/electrical spaces shall be routed so that the lines are easily traceable.

3.2.10.2 Pneumatic Lines In Mechanical/Electrical Spaces

In mechanical/electrical spaces, pneumatic lines shall be plastic tubing or copper tubing. Horizontal and vertical runs of plastic tubes or soft copper tubes shall be installed in raceways dedicated to tubing. Dedicated raceways and tubing not installed in raceways shall be supported every 6 feet for horizontal runs and every 8 feet for vertical runs.

3.2.10.3 Pneumatic Lines External To Mechanical/Electrical Spaces

Tubing external to mechanical/electrical spaces, when run in plenum ceilings, shall be soft copper with sweat fittings. Tubing not in plenum spaces shall be soft copper with sweat fittings or shall be plastic tubing in raceways dedicated to tubing. Raceways and tubing not in raceways shall be supported every 8 feet.

3.2.10.4 Connection to Liquid and Steam Lines

Tubing for connection of sensing elements and transmitters to liquid and steam lines shall be [copper] [Series 300 stainless steel] with [brass compression] [stainless-steel compression] fittings.

3.2.10.5 Connection to Ductwork

Tubing for connection of sensing elements and transmitters to ductwork shall be plastic tubing.

3.2.10.6 Tubing in Concrete

Tubing in concrete shall be installed in rigid conduit. Tubing in walls containing insulation, fill, or other packing materials shall be installed in raceways dedicated to tubing.

3.2.10.7 Final Connection to Actuators

Final connections to actuators shall be plastic tubing 12 inches long and unsupported at the actuator.

3.3 CONTROL SEQUENCES OF OPERATION

3.3.1 General Requirements - HVAC Systems

These requirements shall apply to all primary HVAC systems unless modified herein. The sequences describe the actions of the control system for one direction of change in the HVAC process analog variable, such as temperature, humidity or pressure. The reverse sequence shall occur when the direction of change is reversed.

3.3.1.1 Supply Fan Operating

HVAC system outside air, return air, and relief air dampers shall function as described for specific modes of operation [unless control of the dampers is assumed by the fire and smoke control system. Smoke dampers shall open before fans are allowed to start.] [Interlocked exhaust fans shall be stopped in the unoccupied and ventilation delay modes and their dampers shall be closed. Interlocked exhaust fans shall run in the occupied mode, and their dampers shall open.] Cooling coil control valves and cooling coil circulating pumps shall function as described for the specific modes of operation [unless their control is assumed by the freeze protection

system.] Heating coil valves shall be under control.

3.3.1.2 Supply Fan Not Operating

When an HVAC system is stopped, [all interlocked fans shall stop,] [the smoke dampers shall close,] the outside air and relief air dampers shall close, the return air damper shall open, all stages of direct-expansion cooling shall stop, the system shall pump down if it has a pump down cycle, humidification shall stop, and cooling coil valves for coils located indoors shall close to the coil. Cooling coil valves of units located outdoors shall open to the coil. Heating coil valves shall remain under control.

3.3.1.3 Hydronic Heating - Distribution Pump Operating

Hydronic heat-exchanger valves shall be under control.

3.3.1.4 Hydronic Heating - Distribution Pump Not Operating

Hydronic heat-exchanger valves shall close.

3.3.2 Perimeter Radiation Control Sequence

All Modes - A room thermostat, located as shown, shall operate a control valve to maintain the setpoint as shown.

3.3.3 Unit Heater and Cabinet Unit Heater

All Modes - A wall-mounted thermostat with an "AUTO-OFF" switch located as shown, shall cycle the fan to maintain its setpoint as shown when the switch is in the "AUTO" position. When the switch is in the "OFF" position, the fan shall be stopped.

3.3.4 Gas-Fired Infrared Heater

A microprocessor-based room thermostat with "AUTO-OFF" switch, located as shown, shall control the infrared heater. Auto Mode - When the switch is in the "AUTO" position, the thermostat shall cycle the infrared heater to maintain the day and night setpoints. Programmed occupied times shall be considered "day" and programmed unoccupied times shall be considered "night." Off Mode - When the switch is in the "OFF" position, the infrared heater shall be off.

3.3.5 All-Air Small Package Unitary System

A microprocessor-based room thermostat, located as shown, with "HEAT-OFF-COOL" and "AUTO-ON" switches shall control the system. Heating Mode - Cooling unit shall be off, and heating shall be active. The thermostat shall operate the condensing unit and system fan to maintain the day and night setpoints as shown. Programmed occupied times shall be considered "day" and programmed unoccupied times shall be considered "night." Cooling Mode - Heating unit shall be off. During the day the thermostat shall operate the condensing units and system fan to maintain the setpoint. The condensing unit shall be off at night. Off Mode - The system shall be off. On Mode - The system fan shall run continuously. Auto Mode - The system fan shall operate whenever heating or cooling is required.

3.3.6 Dual Temperature Fan-Coil Unit

All Modes - A wall-mounted thermostat, located as shown, shall cycle the fan to maintain the setpoint as shown. When the fan is on, a 3-way valve shall open to the coil. When the fan is off, the 3-way valve shall bypass the coil. An aquastat shall switch the wall-mounted thermostat action from heating mode to cooling mode whenever the hydronic dual-temperature medium is below the setpoint.

3.3.7 Central Plant Hydronic Heating with Steam/Hot Water Converter

3.3.7.1 All Modes

The DDC system shall accept a signal from a sunshielded outside air temperature sensing element and transmitter located as shown. The DDC system shall start and stop pump [_____] at the outside air temperatures shown. The DDC system shall reset the hydronic heating supply temperature setpoint in a linear schedule based on the outside air temperature as shown. The DDC system shall accept a signal from a temperature sensing element and transmitter located in the hydronic heating supply line and the DDC system output shall modulate the converter steam control valve to maintain the reset schedule setpoint in the hydronic heating supply line.

3.3.7.2 Occupied Mode

When the system time schedule places the system in the occupied mode, a space temperature sensing element and transmitter located as shown shall signal the DDC system, which shall maintain the space temperature setpoint by modulating the secondary hydronic system zone valve.

3.3.7.3 Unoccupied Mode

When the system is in the unoccupied mode, the space temperature setpoint shall be as shown.

3.3.8 Single Building Hydronic Heating with Hot Water Boiler

3.3.8.1 All Modes

The DDC system shall accept a signal from a sunshielded outside air temperature sensing element and transmitter located as shown. The DDC system shall start and stop distribution pump [_____][, boiler pump [_____],] and boiler [_____] at the outside air temperatures shown. The DDC system shall reset the hydronic heating supply temperature setpoint in a linear schedule based on the outside air temperature as shown. The DDC system shall accept a signal from a temperature sensing element and transmitter located in the hydronic heating supply line and the DDC system output shall modulate the hydronic heating system control valve to maintain the reset schedule setpoint in the hydronic heating supply line.

3.3.8.2 Occupied Mode

When the system time schedule places the system in the occupied mode, a space temperature sensing element and transmitter located as shown shall signal the DDC system, which shall maintain the space temperature setpoint shown by modulating the secondary hydronic system zone valve.

3.3.8.3 Unoccupied Mode

When the system is in the unoccupied mode, the space temperature setpoint

shall be as shown.

3.3.9 Central Plant High-Temperature Hot-Water Hydronic Heating

3.3.9.1 All Modes

The DDC system shall accept a signal from a sunshielded outside air temperature sensing element and transmitter located as shown. The DDC system shall start and stop pump [_____] at the outside air temperatures shown. The DDC system shall reset the hydronic heating supply temperature setpoint in a linear schedule based on the outside air temperature as shown. The DDC system shall accept a signal from a temperature sensing element and transmitter located in the hydronic heating supply line and the DDC system output shall modulate the converter high temperature hot water control valve to maintain the reset schedule setpoint in the hydronic heating supply line.

3.3.9.2 Occupied Mode

When the system time schedule places the system in the occupied mode, a space temperature sensing element and transmitter located as shown shall signal the DDC system, which shall maintain the space temperature setpoint as shown by modulating the secondary hydronic system zone valve.

3.3.9.3 Unoccupied Mode

When the system is in the unoccupied mode, the space temperature setpoint shall be as shown.

3.3.10 Central Plant Dual-Temperature Hydronic

Heating and Cooling Modes shall be manually selected.

3.3.10.1 Heating Mode

When the heating mode is selected, the system changeover valves shall close to the central plant chilled water flow and shall open to flow through the converter, and pump [_____] shall be under control of the DDC system. The DDC system shall accept a signal from a sunshielded outside air temperature sensing element and transmitter located as shown. The DDC system shall start and stop pump [_____] at the outside air temperatures shown. The DDC system shall reset the hydronic heating supply temperature setpoint in a linear schedule based on the outside air temperature. The DDC system shall accept a signal from a temperature sensing element and transmitter located in the hydronic heating supply line and the DDC system output shall modulate the converter's steam control valve to maintain the reset schedule setpoint in the hydronic heating supply line.

3.3.10.2 Cooling Mode

When the cooling mode is selected, the converter steam valve shall be closed. The DDC system shall accept a signal from a temperature sensing element and transmitter located in the system return. The DDC system shall continue to operate pump [_____] to circulate water through the system. When the system return water temperature drops below the setpoint shown, the DDC system shall allow the changeover valves to close to flow through the converter and to open to the central plant chilled water flow, and place the control of pump [_____] under control of the system time schedule. During the occupied mode, pump [_____] shall operate

continuously. In the unoccupied mode, pump [_____] shall stop.

3.3.11 Central Plant High-Temperature Hot Water Dual-Temperature Hydronic

Heating and cooling modes shall be manually selected.

3.3.11.1 Heating Mode

When the heating mode is selected, the system changeover valves shall close to the central plant chilled water flow and shall open to flow through the converter, and pump [_____] shall be under control of the DDC system. The DDC system shall accept a signal from a sunshielded outside air temperature sensing element and transmitter located as shown. The DDC system shall start and stop pump [_____] at the outside air temperatures shown. The DDC system shall reset the hydronic heating supply temperature setpoint in a linear schedule based on the outside air temperature as shown. The DDC system shall accept a signal from a temperature sensing element and transmitter located in the hydronic heating supply line and the DDC system output shall modulate the converter's high-temperature hot-water control valve to maintain the reset schedule setpoint in the hydronic heating supply line.

3.3.11.2 Cooling Mode

When the cooling mode is selected, the converter high-temperature hot-water control valve shall be closed. The DDC system shall accept a signal from a temperature sensing element and transmitter located in the system return as shown. The DDC system shall continue to operate pump [_____] to circulate water through the system. When the system return water temperature drops below the setpoint shown, the DDC system shall allow the changeover valves to close to flow through the converter and to open to the central plant chilled water flow, and place the control of pump [_____] under control of the system time schedule. During the occupied mode, pump [_____] shall operate continuously. In the unoccupied mode, pump [_____] shall stop.

3.3.12 Single Building Dual-Temperature Hydronic

Heating and cooling modes shall be manually selected.

3.3.12.1 Heating Mode

When the heating mode is selected, chiller [_____] shall be stopped. Distribution pump [_____] shall continue to operate until the expiration of a time delay as recommended by the chiller manufacturer. At the expiration of the time delay, the system changeover valves shall close to flow through the chiller and shall open to flow through the boiler, and distribution pump [_____] shall be under control of the DDC system. The DDC system shall accept a signal from a sunshielded outside air temperature sensing element and transmitter located as shown. The DDC system shall start and stop the distribution pump [_____][, the boiler pump [_____]], and the boiler [_____] at the outside air temperatures shown. The DDC system shall reset the hydronic heating supply temperature setpoint in a linear schedule based on the outside air temperature as shown. The DDC system shall accept a signal from a temperature sensing element and transmitter located in the hydronic supply line and the DDC system output shall modulate the hydronic heating system control valve to maintain the reset schedule setpoint in the hydronic heating supply line.

3.3.12.2 Cooling Mode

When the cooling mode is selected, the boiler [_____] [and the boiler pump [_____]] shall be stopped. The DDC system shall accept a signal from a temperature sensing element and transmitter located in the system supply as shown. The DDC system shall continue to operate the distribution pump [_____] to circulate water through the system with the boiler shut off. When the system supply water temperature drops below the setpoint shown, the DDC system shall allow the changeover valves to close to flow through the boiler and to open to flow through the chiller, and shall place the chiller and the distribution pump [_____] under control of the system time schedule. During the occupied mode, the distribution pump [_____] shall operate continuously and chiller [_____] shall be permitted to operate. When the control system is in the unoccupied mode, chiller [_____] shall shut down. Distribution pump [_____] shall continue to operate until the expiration of the time delay.

3.3.13 Heating and Ventilating Unit

3.3.13.1 Occupied, Unoccupied, and Ventilation Delay Operating Modes

Ventilation delay mode timing shall start prior to the occupied mode timing. The DDC system shall prevent the outside air damper from opening. At the time shown, the DDC system shall place the system in the occupied mode. At the expiration of the ventilation delay mode timing period, the DDC system shall allow the outside air damper to open. At the time shown, the DDC system shall place the control system in the unoccupied mode of operation.

3.3.13.2 Outside Air, Return Air, and Relief Air Dampers

a. Occupied Mode - The outside air, return air, and relief air dampers shall be under space temperature and economizer control.

b. Unoccupied and Ventilation Delay Modes - The dampers shall return to their normal positions.

3.3.13.3 Supply Fan Control

a. Occupied and Ventilation Delay Modes - Supply fan [_____] shall start, and shall operate continuously.

b. Unoccupied Mode - The supply fan shall cycle according to the night setback schedule. The fan shall start and stop at the setpoints as shown.

3.3.13.4 Filter

The DDC panel shall monitor the differential pressure switch across the filter and shall provide an alarm when the pressure drop exceeds the setpoint.

3.3.13.5 Freeze Protection

All Modes - A freezestat, located as shown, shall stop the supply fan, cause the outside air, return air, and relief air dampers to return to their normal position, and shall initiate a low temperature alarm if the temperature drops below the freezestat's setpoint. Return to the normal mode of operation shall require manual reset at the freezestat. The DDC system shall monitor the freezestat through auxiliary contacts and shall

indicate an alarm condition when the freezestat trips.

3.3.13.6 Space Temperature Control

A space temperature sensing element and transmitter operating through the DDC system shall first gradually shut off the heating coil valve. After the heating coil valve is fully closed, the DDC system shall then gradually operate the outside air damper to admit outside air beyond the minimum quantity to maintain the setpoint as shown.

3.3.13.7 Emergency Fan Shutdown

All Modes - Smoke Detectors in the supply air and return air ductwork shall stop the supply fan and initiate a smoke alarm if smoke is detected at either location. Restarting the supply fan shall require manual reset at the smoke detector.

3.3.14 Multizone with Return Fan

3.3.14.1 Occupied, Unoccupied, and Ventilation Delay Modes of Operation

Ventilation delay mode timing shall start prior to the occupied mode timing. The DDC system shall prevent the outside air damper from opening. At the time shown, the DDC system shall place the system in the occupied mode. At the expiration of the ventilation delay mode timing period, the DDC system shall allow the outside air damper to open. At the time shown, the DDC system shall place the control system in the unoccupied mode of operation.

3.3.14.2 Outside Air, Return Air, and Relief Air Dampers

a. Occupied Mode - The outside air, return air, and relief air dampers shall [be under mixed air temperature and economizer control.] [open to their minimum position.]

b. Unoccupied Mode - The dampers shall return to their normal positions as shown.

c. Ventilation Delay Mode - The dampers shall return to their normal positions as shown, [except when under economizer control] [_____].

3.3.14.3 Supply Fan and Return Fan Control

a. Occupied and Ventilation Delay Modes - Supply fan [_____] and return fan [_____] shall start, and shall operate continuously.

b. Unoccupied Mode - The supply fan and the return fan shall cycle according to the night setback schedule. The fans shall start and stop at the setpoints.

3.3.14.4 Filter

A differential pressure switch across the filter shall initiate a filter alarm when the pressure drop across the filter reaches the setpoint as shown.

3.3.14.5 Hot-Deck Heating Coil

All Modes - The DDC system shall modulate the control valve from the signal

of a temperature sensing element and transmitter located in the discharge air of the coil to maintain the setpoint. A temperature sensing element and transmitter in the outside air intake shall reset the hot-deck temperature setpoint with respect to the outside air temperature signal in a linear schedule as shown.

3.3.14.6 Freeze Protection

All Modes - A freezestat, located as shown, shall stop the supply and return fans, cause the outside air, return air, and relief air dampers to return to their normal position, and shall initiate a low temperature alarm if the temperature drops below the freezestat's setpoint. Return to the normal mode of operation shall require manual reset at the freezestat. The DDC system shall monitor the freezestat through auxiliary contacts and shall indicate an alarm condition when the freezestat trips.

3.3.14.7 Cold-Deck Coil

a. Occupied and Ventilation Delay Modes - The control valve shall be modulated by the DDC system from the signal of a temperature sensing element and transmitter located in the coil discharge air to maintain the setpoint as shown.

b. Unoccupied Mode - The DDC system shall close the cooling coil control valve.

3.3.14.8 Economizer Control

The DDC system shall accept the signal of an outside air temperature sensing element and transmitter and the signal of a return air temperature sensing element and transmitter. The DDC system shall perform switch over between outside air economizer control mode and minimum outside air mode. Until the outside air temperature rises above the setpoint, the DDC system shall hold the system in the minimum outside air mode. When the outside air temperature rises above the setpoint, the DDC system shall place the AHU in the economizer mode or in the minimum outside air mode as determined by a comparison of the outside air and return air temperatures in accordance with the differential temperature setpoints as shown. When the outside air temperature is low with respect to the return air temperature, the AHU shall be in the economizer mode. When the DDC system places the control system in the minimum outside air mode, the outside air damper shall be open to the minimum outdoor air setting.

3.3.14.9 Mixed Air Temperature Control

When the DDC system places the system in the economizer mode, it shall modulate the dampers from the signal of a temperature sensing element and transmitter in the mixed air stream to maintain the setpoint as shown.

3.3.14.10 Zone Damper Control

All Modes - A space temperature sensor for each zone shall signal the DDC system to gradually operate the zone mixing damper to heat and cool its respective zone by mixing cold-deck air and hot-deck air to maintain the setpoint. On a rise in space temperature, the hot-deck damper shall gradually close, and the cold-deck damper shall gradually open.

3.3.14.11 Emergency Fan Shutdown

All Modes - Smoke detectors in the supply air and return air ductwork shall stop the supply fan and the return fan and initiate a smoke alarm if smoke is detected at either location. Restarting the supply fan and the return fan shall require manual reset at the smoke detectors.

3.3.15 Dual-Duct Multizone with Return Fan

3.3.15.1 Occupied, Unoccupied, and Ventilation Delay Modes of Operation

Ventilation delay mode timing shall start prior to the occupied mode timing. The DDC system shall prevent the outside air damper from opening. At the time shown, the DDC system shall place the system in the occupied mode. At the expiration of the ventilation delay mode timing period, the DDC system shall allow the outside air damper to open. At the time shown, the DDC system shall place the control system in the unoccupied mode of operation.

3.3.15.2 Outside Air, Return Air, and Relief Air Dampers

a. Occupied Mode - The outside air, return air, and relief air dampers shall [be under mixed air temperature and economizer control.] [open to their minimum position.]

b. Unoccupied Mode - The dampers shall return to their normal positions as shown.

c. Ventilation Delay Mode - The dampers shall return to their normal positions as shown, [except when under economizer control] [_____].

3.3.15.3 Supply Fan and Return Fan Control

a. Occupied and Ventilation Delay Modes - Supply fan [_____] and return fan [_____] shall start, and shall operate continuously.

b. Unoccupied Mode - The supply fan and the return fan shall cycle according to the night setback schedule. The fans shall start and stop at the setpoints as shown.

3.3.15.4 Filter

A differential pressure switch across the filter shall initiate the filter alarm when the pressure drop across the filter reaches the setpoint as shown.

3.3.15.5 Hot-Deck Heating Coil

All Modes - The DDC system shall modulate the control valve from the signal of a temperature sensing element and transmitter located in the discharge air of the coil to maintain the setpoint. A temperature sensing element and transmitter in the outside air intake shall reset the hot-deck temperature setpoint with respect to the outside air temperature signal in a linear schedule as shown.

3.3.15.6 Freeze Protection

All Modes - A freezestat, located as shown, shall stop the supply and return fans, cause the outside air, return air, and relief air dampers to return to their normal position, and shall initiate a low temperature alarm if the temperature drops below the freezestat's setpoint as shown. Return

to the normal mode of operation shall require manual reset at the freezestat. The DDC system shall monitor the freezestat through auxiliary contacts and shall indicate an alarm condition when the freezestat trips.

3.3.15.7 Cold-Deck Cooling Coil

a. Occupied and Ventilation Delay Modes - The control valve shall be modulated by the DDC system from the signal of a temperature sensing element and transmitter in the coil discharge air to maintain the setpoint as shown.

b. Unoccupied Mode - The cooling coil control valve shall be closed.

3.3.15.8 Economizer Control

The DDC system shall accept the signal of an outside air temperature sensing element and transmitter and the signal of a return air temperature sensing element and transmitter. The DDC system shall perform switchover between outside air economizer control mode and minimum outside air mode. Until the outside air temperature rises above the setpoint, the DDC system shall hold the system in the minimum outside air mode. When the outside air temperature rises above the setpoint, the DDC system shall place the AHU in the economizer mode or in the minimum outside air mode, as determined by a comparison of the outside air and return air temperatures in accordance with the differential temperature setpoints. When the outside air temperature is low with respect to the return air temperature, the AHU shall be in the economizer mode. When the DDC system places the control system in the minimum outside air mode, the outside air damper shall be open to the minimum outdoor air setting.

3.3.15.9 Mixed Air Temperature Control

When the DDC system places the AHU in the economizer mode, it shall modulate the dampers from the signal of a temperature sensing element and transmitter in the mixed air stream to maintain the setpoint as shown.

3.3.15.10 Dual-Duct Terminal Box

All Modes - A space temperature sensor for each zone shall signal the DDC system to gradually operate the control dampers of the dual-duct box to heat and cool its respective zone by mixing cold-duct air and hot-duct air to maintain the setpoint as shown. On a rise in space temperature, the hot-duct damper shall gradually close, and the cold-duct damper shall gradually open.

3.3.15.11 Emergency Fan Shutdown

All Modes - Smoke detectors in the supply air and return air ductwork shall stop the supply fan and the return fan and initiate a smoke alarm if smoke is detected at either location. Restarting the supply fan and the return fan shall require manual reset at the smoke detectors.

3.3.16 Bypass Multizone with Return Fan

3.3.16.1 Occupied, Unoccupied, and Ventilation Delay Modes of Operation

Ventilation delay mode timing shall start prior to the occupied-mode timing. The DDC system shall prevent the outside air damper from opening. At the time shown, the DDC system shall place the system in the occupied

mode. At the expiration of the ventilation delay mode timing period, the DDC system shall allow the outside air damper to open. At the time shown, the DDC system shall place the control system in the unoccupied mode of operation.

3.3.16.2 Outside Air, Return Air, and Relief air Dampers

a. Occupied Mode - The outside air, return air, and relief air dampers shall be under mixed air temperature and economizer control.

b. Unoccupied Mode - The dampers shall return to their normal positions as shown.

c. Ventilation Delay Mode - The dampers shall return to their normal positions as shown, except when under economizer control.

3.3.16.3 Supply Fan and Return Fan Control

a. Occupied and Ventilation Delay Modes - Supply fan [_____] and return fan [_____] shall start, and shall operate continuously.

b. Unoccupied Mode - The supply fan and the return fan shall cycle according to the night setback schedule. The fans shall start and stop at the setpoints as shown.

3.3.16.4 Filter

A differential pressure switch across the filter shall initiate a filter alarm when the pressure drop across the filter reaches the setpoint as shown.

3.3.16.5 Freeze Protection

All Modes - A freezestat, located as shown, shall stop the supply and return fans, cause the outside air, return air, and relief air dampers to return to their normal position, and shall initiate a low temperature alarm if the temperature drops below the freezestat's setpoint. Return to the normal mode of operation shall require manual reset at the freezestat. The DDC system shall monitor the freezestat through auxiliary contacts and shall indicate an alarm condition when the freezestat trips.

3.3.16.6 Cold Deck Coil

a. Occupied and Ventilation Delay Modes - The control valve shall be modulated by the DDC system from the signal of a temperature sensing element and transmitter located in the coil discharge air to maintain the setpoint as shown.

b. Unoccupied Mode - The DDC system shall close the cooling coil control valve.

3.3.16.7 Economizer Control

The DDC system shall accept the signal of an outside air temperature sensing element and transmitter and the signal of a return air temperature sensing element and transmitter. The DDC system shall perform switchover between outside air economizer control mode and minimum outside air mode. Until the return air temperature rises above the setpoint, the DDC system shall hold the system in the minimum outside air mode. When the return air

temperature rises above the setpoint, the DDC system shall place the AHU in the economizer mode or in the minimum outside air mode, as determined by a comparison of the outside air and return air temperatures in accordance with the differential temperature setpoints. When the outside air temperature is low with respect to the return air temperature, the AHU shall be in the economizer mode. When the DDC system places the control system in the minimum outside air mode, the outside air damper shall be open to the minimum outdoor air setting.

3.3.16.8 Mixed Air Temperature Control

When the DDC system places the system in the economizer mode, it shall modulate the dampers from the signal of a temperature sensing element and transmitter in the mixed air stream to maintain the setpoint as shown.

3.3.16.9 Zone Control

All Modes - A space temperature sensor for each zone shall signal the DDC system to gradually operate the zone mixing damper and heating coil to heat and cool its respective zone by mixing cold-deck air and bypass-deck air to maintain the setpoint as shown. On a rise in space temperature the heating coil valve shall gradually close and after a deadband as shown, the bypass damper shall gradually close, and the cold deck damper shall gradually open.

3.3.16.10 Emergency Fan Shutdown

All Modes - Smoke detectors in the supply air and return air ductwork shall stop the supply fan and the return fan and initiate a smoke alarm if smoke is detected at either location. Restarting the supply fan and the return fan shall require manual reset at the smoke detectors.

3.3.17 Variable Air Volume Control Sequence without Return Fan

3.3.17.1 Occupied, Unoccupied, and Ventilation Delay Modes of Operation

Ventilation delay mode timing shall start prior to the occupied mode timing. During ventilation delay mode, the dampers shall remain in their normal positions as shown, except when under economizer control. At the time shown, the DDC system shall place the system in the occupied mode. At the expiration of the ventilation delay mode timing period, the DDC system shall place the minimum outside air damper under minimum outside air flow control and shall place the economizer outside air, return air, and relief air dampers under economizer control and mixed air temperature. At the time shown, the DDC system shall place the control system in the unoccupied mode of operation and all dampers shall return to their normal positions as shown.

3.3.17.2 Supply Fan Control

a. Occupied and Ventilation Delay Modes - Supply fan [_____] shall start, and operate continuously.

b. Unoccupied Mode - The supply fan shall cycle according to the night setback schedule. The fan shall start and stop at the setpoints as shown.

3.3.17.3 Supply Duct Pressurization Control

When the supply fan starts, the DDC system shall modulate the inlet vanes

from the signal of a static pressure sensing element and transmitter to maintain the setpoint as shown. A high limit static pressure switch in the fan discharge shall stop the supply fan and initiate a high static alarm when the static pressure exceeds the setpoint. When the fan is off, the inlet vanes shall be closed.

3.3.17.4 Filters

A differential pressure switch across each filter shall initiate a filter alarm when the pressure drop across the filter reaches the setpoint as shown.

3.3.17.5 Freeze Protection

All Modes - A freezestat, located as shown, shall stop the supply fan, cause the outside air, return air, and relief air dampers to return to their normal position, and shall initiate a low temperature alarm if the temperature drops below the freezestat's setpoint as shown. The DDC system shall monitor the freezestat through auxiliary contacts and shall indicate an alarm condition when the freezestat trips.

3.3.17.6 Cooling Coil

a. Occupied and Ventilation Delay Modes - The cooling coil control valve shall be modulated by the DDC system from the signal of a temperature sensing element and transmitter located in the coil discharge air to maintain the setpoint as shown.

b. Unoccupied Mode - The cooling coil control valve shall remain closed.

3.3.17.7 Minimum Outside Air Flow Control

a. Occupied Mode - The minimum outside air damper shall be modulated to maintain the minimum outside air flow at setpoint, as sensed by an air flow measurement station located in the minimum outside air duct.

b. Unoccupied and Ventilation Delay Modes - The minimum outside air damper shall remain closed.

3.3.17.8 Economizer and Mixed Air Temperature Control

The DDC system shall accept the signal of an outside air temperature sensing element and transmitter and the signal of a return air temperature sensing element and transmitter. When the return air temperature is above the economizer setpoint, and the outside air temperature is sufficiently below the return air temperature to be effective for cooling, the DDC system shall place the AHU in the economizer mode by modulating the economizer outside air, relief air, and the return air dampers to maintain the mixed air temperature at setpoint. As the economizer outside air and relief air dampers open, the return air damper closes. When the system is not in economizer mode, the economizer outside air and relief air dampers shall remain closed and the return air damper shall remain open.

3.3.17.9 Pressure Independent Terminal VAV Box with Velocity Controller

All Modes - The control damper of the VAV box shall modulate in response to the signal from a flow sensing element at the discharge or inlet of the VAV box to a microprocessor based VAV box velocity controller. The velocity

controller shall control the box damper from the minimum flow position to the full flow position from the signal of a space temperature sensing element located as shown. When the space temperature decreases, the damper shall gradually close to the minimum flow position to maintain the cooling setpoint as shown. When the space temperature calls for heating after the minimum flow position is reached, control shall then pass through a temperature dead band as shown. When the space temperature has dropped through the dead band, the duct heater coil shall be gradually controlled to maintain the heating setpoint as shown.

3.3.17.10 Fan Powered Terminal VAV Box

a. Series Fan Powered Terminal Box. All Modes - The VAV box fan shall be energized from an upstream duct pressure switch confirming HVAC system fan operation. A space temperature sensing element, located as shown, acting through a microprocessor based VAV box controller, shall modulate the supply air control damper, mixing the supply air and recirculating room air to provide a constant volume of air to the space to maintain the cooling set point as shown until the supply air damper closes to minimum supply air flow. When the space temperature calls for heat after the supply air damper is closed to minimum flow and the VAV box is in maximum recirculation, control shall then pass through the temperature dead band. When the space temperature has dropped through the temperature dead band, the duct heater coil shall be gradually controlled to maintain the heating setpoint.

b. Parallel Fan Powered Terminal VAV Box. All Modes - A space temperature sensing element, located as shown, acting through a microprocessor based VAV box controller, shall modulate the supply air control damper to maintain the cooling setpoint as shown until the supply air damper closes to minimum supply air flow. When the space temperature calls for heat after the supply air damper is closed to minimum flow, control shall then pass through the temperature deadband, and the VAV box fan shall be energized. When the space temperature has dropped through a second temperature deadband, the duct heater coil shall be gradually controlled to maintain the heating setpoint.

3.3.17.11 Emergency Fan Shutdown

All Modes - Smoke detectors in the supply air and return air ductwork shall stop the supply fan and initiate a smoke alarm if smoke is detected at either location. Restarting the supply fan shall require manual reset at the smoke detector.

3.3.18 Variable Air Volume Control Sequence with Return Fan

3.3.18.1 Occupied, Unoccupied, and Ventilation Delay Modes of Operation

Ventilation delay mode timing shall start prior to the occupied mode timing. During ventilation delay mode, the dampers shall remain in their normal positions as shown, except when under economizer control. At the time shown, the DDC system shall place the system in the occupied mode. At the expiration of the ventilation delay mode timing period, the DDC system shall place the minimum outside air damper under minimum outside air flow control and shall place the economizer outside air, return air, and relief air dampers under economizer and mixed air temperature control. At the time shown, the DDC system shall place the control system in the unoccupied mode of operation and dampers shall return to their normal positions as shown.

3.3.18.2 Fan Control

a. Occupied and Ventilation Delay Modes - Supply fan and return fan shall operate continuously.

b. Unoccupied Mode - The supply fan and the return fan shall cycle according to the night setback schedule. The fans shall start and stop at the setpoints as shown.

3.3.18.3 Supply Duct Pressurization Control

When the supply fan starts, the DDC system shall modulate the inlet vanes from the signal of a static pressure sensing element and transmitter to maintain the setpoint as shown. A high limit static pressure switch in the fan discharge shall stop the supply fan and the return fan and initiate a high static alarm when the static pressure exceeds the setpoint. When the fans are off, the inlet vanes shall be closed.

3.3.18.4 Return Fan Volume Control

When the return fan starts, the DDC system shall modulate the return fan inlet vanes from the signals of an air flow measurement station and transmitter in the return air ductwork, in combination with an air flow measurement station and transmitter in the supply air ductwork, to maintain a constant difference between supply air and return air flow rates as shown.

3.3.18.5 Filters

A differential pressure switch across each filter shall initiate a filter alarm when the pressure drop across the filter reaches the setpoint as shown.

3.3.18.6 Freeze Protection

A freezestat, located as shown, shall stop the supply and return fans, cause the outside air, return air, and relief air dampers to return to their normal position, and shall initiate a low temperature alarm if the temperature drops below the freezestat's setpoint as shown. The DDC system shall monitor the freezestat through auxiliary contacts and shall indicate an alarm condition when the freezestat trips.

3.3.18.7 Cooling Coil Control

a. Occupied and Ventilation Delay Modes - The cooling coil control valve shall be modulated by the DDC system from the signal of a temperature sensing element and transmitter located in the coil discharge air to maintain the setpoint as shown.

b. Unoccupied Mode - The cooling coil control valve shall remain closed.

3.3.18.8 Minimum Outside Air Flow Control

a. Occupied Mode - The minimum outside air damper shall be modulated to maintain the minimum outside air flow at setpoint, as sensed by an air flow measurement station located in the minimum outside air duct.

b. Unoccupied and Ventilation Delay Modes - The minimum outside air

damper shall remain closed.

3.3.18.9 Economizer and Mixed Air Temperature Control

The DDC system shall accept the signal of an outside air temperature sensing element and transmitter and the signal of a return air temperature sensing element and transmitter. When the return air temperature is above the economizer setpoint, and the outside air temperature is sufficiently below the return air temperature to be effective for cooling, the DDC system shall place the AHU in the economizer mode by modulating the economizer outside air, relief air, and the return air dampers to maintain the mixed air temperature at setpoint. As the economizer outside air and relief air dampers open, the return air damper closes. When the system is not in economizer mode, the economizer outside air and relief air dampers shall remain closed and the return air damper shall remain open.

3.3.18.10 Pressure Independent Terminal VAV Box with Velocity Controller

All Modes - The control damper of the VAV box shall modulate in response to the signal from a flow sensing element at the discharge or inlet of the VAV box to a microprocessor based VAV box velocity controller. The velocity controller shall control the box damper from the minimum flow position to the full flow position from the signal of a space temperature sensing element located as shown. When the space temperature decreases, the damper shall gradually close to the minimum flow position to maintain the cooling setpoint as shown. When the space temperature calls for heating after the minimum flow position is reached, control shall then pass through a temperature dead band as shown. When the space temperature has dropped through the dead band, the duct heater coil shall be gradually controlled to maintain the heating setpoint as shown.

3.3.18.11 Fan Powered Terminal VAV Box

a. Series Fan Powered Terminal Box. All Modes - The VAV box fan shall be energized from an upstream duct pressure switch confirming HVAC system fan operation. A space temperature sensing element, located as shown, acting through a microprocessor based VAV box controller, shall modulate the supply air control damper, mixing the supply air and recirculating room air to provide a constant volume of air to the space to maintain the cooling set point as shown until the supply air damper closes to minimum supply air flow. When the space temperature calls for heat after the supply air damper is closed to minimum flow and the VAV box is in maximum recirculation, control shall then pass through the temperature dead band. When the space temperature has dropped through the temperature dead band, the duct heater coil shall be gradually controlled to maintain the heating setpoint.

b. Parallel Fan Powered Terminal VAV Box. All Modes - A space temperature sensing element, located as shown, acting through a microprocessor based VAV box controller, shall modulate the supply air control damper to maintain the cooling setpoint as shown until the supply air damper closes to minimum supply air flow. When the space temperature calls for heat after the supply air damper is closed to minimum flow, control shall then pass through the temperature deadband, and the VAV box fan shall be energized. When the space temperature has dropped through a second temperature deadband, the duct heater coil shall be gradually controlled to maintain the heating setpoint.

3.3.18.12 Emergency Fan Shutdown

All Modes - Smoke detectors in the supply air and return air ductwork shall stop the supply fan and the return fan and initiate a smoke alarm if smoke is detected at either location. Restarting the supply fan and the return fan shall require manual reset at the smoke detector.

3.3.19 Single Zone with Hydronic Heating/Cooling Coils No Return Fan

3.3.19.1 Occupied, Unoccupied, and Ventilation Delay Modes of Operation

Ventilation delay mode timing shall start prior to the occupied mode timing. The DDC system shall prevent the outside air damper from opening. At the time shown, the DDC system shall place the system in the occupied mode. At the expiration of the ventilation delay mode timing period, the DDC system shall allow the outside air damper to open. At the time shown, the DDC system shall place the control system in the unoccupied mode of operation.

3.3.19.2 Outside Air, Return Air, and Relief Air Dampers

a. Occupied Mode - The outside air, return air, and relief air dampers shall be under space temperature and economizer control.

b. Unoccupied Mode - The dampers shall return to their normal positions.

c. Ventilation Delay Mode - The dampers shall return to their normal positions, except when under economizer control.

3.3.19.3 Supply Fan Control

a. Occupied and Ventilation Delay Modes - Supply fan [_____] shall start, and shall operate continuously.

b. Unoccupied Mode - The supply fan shall cycle according to the night setback schedule. The fan shall start and stop at the setpoints.

3.3.19.4 Filter

A differential pressure switch across the filter shall initiate a filter alarm when the pressure drop across the filter reaches the setpoint.

3.3.19.5 Freeze Protection

All Modes - A freezestat, located as shown, shall stop the supply fan, cause the outside air, return air, and relief air dampers to return to their normal position, and shall initiate a low temperature alarm if the temperature drops below the freezestat's setpoint. Return to the normal mode of operation shall require manual reset at the freezestat. The DDC system shall monitor the freezestat through auxiliary contacts and shall indicate an alarm condition when the freezestat trips.

3.3.19.6 Hydronic Cooling Coil

a. Occupied and Ventilation Delay Modes - The control valve shall be modulated by the DDC system from the signal of a space temperature sensor.

b. Unoccupied Mode - The DDC system shall close the cooling coil control valve.

3.3.19.7 Economizer Control

The DDC system shall accept the signal of an outside air temperature sensing element and transmitter and the signal of a return air temperature sensing element and transmitter. The DDC system shall perform switchover between outside air economizer control mode and minimum outside air mode. Until the return air temperature rises above the setpoint, the DDC system shall hold the system in the minimum outside air mode. When the return air temperature rises above the setpoint, the DDC system shall place the AHU in the economizer mode or in the minimum outside air mode, as determined by a comparison of the outside air and return air temperatures in accordance with the differential temperature setpoints. When the outside air temperature is low with respect to the return air temperature, the AHU shall be in the economizer mode. When the DDC system places the control system in the minimum outside air mode, the outside air damper shall be open to the minimum outdoor air setting.

3.3.19.8 Space Temperature Sequenced Heating and Cooling Control

When the DDC system is in the economizer mode, it shall maintain the setpoint from the signal of a space temperature sensor and transmitter. On a rise in space temperature, the DDC system shall first gradually close the heating coil valve. After passing through a deadband, the DDC system shall gradually operate the outside air damper to admit outside air beyond the minimum quantity and after the outside air damper is fully open the DDC system shall then operate the cooling coil valve to maintain the setpoint. When the DDC system is in the minimum outside air mode, the outside air damper shall be open to the minimum outside air setting. On a rise in space temperature, the DDC system shall first gradually close the heating coil valve. After passing through a deadband, the DDC system shall then gradually open the cooling coil valve to maintain the setpoint.

3.3.19.9 Emergency Fan Shutdown

All Modes - Smoke detectors in the supply air and return air ductwork shall stop the supply fan and initiate a smoke alarm if smoke is detected at either location. Restarting the supply fan shall require manual reset at the smoke detector.

3.3.20 Single Zone with Dual-Temperature Coil; No Return Fan

3.3.20.1 Occupied, Unoccupied, and Ventilation Delay Modes of Operation

Ventilation delay mode timing shall start prior to the occupied mode timing. The DDC system shall prevent the outside air damper from opening. At the time shown, the DDC system shall place the system in the occupied mode. At the expiration of the ventilation delay mode timing period, the DDC system shall allow the outside air damper to open. At the time shown, the DDC system shall place the control system in the unoccupied mode of operation.

3.3.20.2 Outside Air, Return Air, and Relief Air Dampers

a. Occupied Mode - The outside air, return air, and relief air dampers shall be under space temperature and economizer control.

b. Unoccupied Mode - The dampers shall return to their normal positions.

c. Ventilation Delay Mode - The dampers shall return to their normal positions, except when under economizer control.

3.3.20.3 Supply Fan Control

a. Occupied and Ventilation Delay Modes - Supply fan [_____] shall start, and shall operate continuously.

b. Unoccupied Mode - The supply fan shall cycle according to the night setback schedule. The fan shall start and stop at the setpoints as shown.

3.3.20.4 Filter

A differential pressure switch across the filter shall initiate a filter alarm when the pressure drop across the filter reaches the setpoint as shown.

3.3.20.5 Freeze Protection

All Modes - A freezestat, located as shown, shall stop the supply fan, cause the outside air, return air, and relief air dampers to return to their normal position, and shall initiate a low temperature alarm if the temperature drops below the freezestat's setpoint. Return to the normal mode of operation shall require manual reset at the freezestat. The DDC system shall monitor the freezestat through auxiliary contacts and shall indicate an alarm condition when the freezestat trips.

3.3.20.6 Dual-Temperature Coil Changeover Control

The DDC panel shall select the heating and cooling modes based on input from a temperature sensor and transmitter located in the dual-temperature supply. When the dual-temperature supply temperature is above the setpoint, the DDC panel shall operate the dual-temperature coil valve as a heating coil valve in sequence with the outside air, return air, and relief air dampers. When the dual-temperature supply temperature is below the setpoint, the DDC system shall operate the dual-temperature coil valve as a cooling coil valve in sequence with the outside air, return air, and relief air dampers.

3.3.20.7 Economizer Control

The DDC system shall accept the signal of an outside air temperature sensing element and transmitter and the signal of a return air temperature sensing element and transmitter. The DDC system shall perform switchover between outside air economizer control mode and minimum outside air mode. Until the return air temperature rises above the setpoint, the DDC system shall hold the system in the minimum outside air mode. When the return air temperature rises above the setpoint, the DDC system shall place the AHU in the economizer mode or in the minimum outside air mode, as determined by a comparison of the outside air and return air temperatures in accordance with the differential temperature setpoints. When the outside air temperature is low with respect to the return air temperature, the AHU shall be in the economizer mode. When the DDC system places the control system in the minimum outside air mode, the outside air damper shall be open to the minimum outdoor air setting.

3.3.20.8 Space Temperature Sequenced Heating Control

When the DDC system is in the economizer mode, it shall maintain the setpoint from the signal of a space temperature sensor and transmitter. On a rise in space temperature, the DDC system shall first gradually close the coil valve. After passing through a deadband, the DDC system shall then gradually operate the outside air damper to admit outside air beyond the minimum quantity to maintain the setpoint as shown. When the DDC system is in the minimum outside air mode, the outside air damper shall be open to the minimum outside air setting. On a rise in space temperature, the DDC system shall gradually close the coil valve to maintain the setpoint as shown.

3.3.20.9 Space Temperature Sequenced Cooling Control

When the DDC system is in the economizer mode, it shall maintain the setpoint from the signal of a space temperature sensor and transmitter. On a rise in space temperature, the DDC system shall first gradually open the outside air damper to admit outside air beyond the minimum quantity. When the outside air damper is fully open, on a further rise in space temperature, the DDC system shall gradually open the coil valve. When the DDC system is in the minimum outside air mode, the outside air damper shall be open to the minimum outside air setting. On a rise in space temperature, the DDC system shall gradually open the coil valve to maintain the setpoint.

3.3.20.10 Emergency Fan Shutdown

All Modes - Smoke detectors in the supply air and return air ductwork shall stop the supply fan and initiate a smoke alarm if smoke is detected at either location. Restarting the supply fan shall require manual reset at the smoke detector.

3.3.21 Single Zone Control with Humidity Control; No Return Fan

3.3.21.1 Occupied, Unoccupied, and Ventilation Delay Modes of Operation

Ventilation delay mode timing shall start prior to the occupied mode timing. The DDC system shall prevent the outside air damper from opening. At the time shown, the DDC system shall place the system in the occupied mode. At the expiration of the ventilation delay mode timing period, the DDC system shall allow the outside air damper to open. At the time shown, the DDC system shall place the control system in the unoccupied mode of operation.

3.3.21.2 Outside Air Damper

a. Occupied Mode - The outside air damper shall open.

b. Unoccupied and Ventilation Delay Modes - The damper shall close.

3.3.21.3 Supply Fan Control

a. Occupied and Ventilation Delay Modes - Supply fan [_____] shall start, and shall operate continuously.

b. Unoccupied Mode - The supply fan shall cycle according to the night setback schedule. The fan shall start and stop at the setpoints.

3.3.21.4 Filter

Differential pressure switch across the filter shall initiate a filter alarm when the pressure drop across the filter reaches the setpoint.

3.3.21.5 Outside Air Preheat-Coil Control

All Modes - The DDC system shall modulate the control valve from the signal of a temperature sensing element and transmitter in the coil discharge air to maintain the setpoint.

3.3.21.6 Freeze Protection

All Modes - A freezestat, located as shown, shall stop the supply fan, cause the outside air, return air, and relief air dampers to return to their normal position, and shall initiate a low temperature alarm if the temperature drops below the freezestat's setpoint. Return to the normal mode of operation shall require manual reset at the freezestat. The DDC system shall monitor the freezestat through auxiliary contacts and shall indicate an alarm condition when the freezestat trips.

3.3.21.7 Cooling Coil

a. Occupied and Ventilation Delay Modes - The DDC system shall compare the signals of a space temperature sensor/transmitter and space relative humidity sensor/transmitter to operate the cooling coil valve. Based on the highest signal received, the DDC system shall modulate the valve to maintain space temperature or space relative humidity.

b. Unoccupied Mode - The DDC system shall close the cooling coil control valve.

3.3.21.8 Humidity Control

a. Occupied Mode - The DDC system shall accept the signals from a space relative humidity sensor and a duct relative humidity sensor to control the humidifier valve and the cooling coil valve. The DDC system shall gradually open the cooling coil valve in the event that the space relative humidity continues to rise after the humidifier valve is closed. The DDC system shall gradually operate the humidifier valve from the signal of a space relative humidity sensor/transmitter to maintain relative humidity setpoint. The DDC system shall receive a signal from a relative humidity sensor/transmitter in the ductwork downstream of the humidifier and shall limit the relative humidity at that point to a high-limit relative humidity setpoint.

b. Unoccupied and Ventilation Delay Modes - The humidifier valve shall be closed.

3.3.21.9 Constant Temperature Hydronic Heating Control

All Modes - The DDC system shall accept a signal from a temperature sensing element and transmitter in the heating supply line, and shall modulate the system control valve to maintain the setpoint.

3.3.21.10 Reheat

All Modes - The DDC system shall gradually close the reheat coil valve on a rise in space temperature to maintain the setpoint.

3.3.21.11 Emergency Fan Shutdown

All Modes - Smoke detectors in the supply air and return air ductwork shall stop the supply fan and initiate a smoke alarm if smoke is detected at either location. Restarting the supply fan shall require manual reset at the smoke detector.

3.3.22 Single Zone Hydronic Heating and Direct Expansion Cooling Coil

3.3.22.1 Occupied, Unoccupied, and Ventilation Delay Modes

Ventilation delay mode timing shall start prior to the occupied mode timing. The DDC system shall prevent the outside air damper from opening. At the time shown, the DDC system shall place the system in the occupied mode. At the expiration of the ventilation delay mode timing period, the DDC system shall allow the outside air damper to open. At the time shown, the DDC system shall place the control system in the unoccupied mode of operation.

3.3.22.2 Outside Air, Return Air, and Relief Air Dampers

a. Occupied Mode - The outside air, return air, and relief air dampers shall be under mixed air temperature and economizer control.

b. Unoccupied Mode - The dampers shall return to their normal positions.

c. Ventilation Delay Mode - The dampers shall return to their normal positions, except when under economizer control.

3.3.22.3 Supply Fan Control

a. Occupied and Ventilation Delay Modes - Supply fan [_____] shall start and shall operate continuously.

b. Unoccupied Mode - The supply fan shall cycle according to the night setback schedule. The fan shall start and stop at the setpoints shown.

3.3.22.4 Filter

A differential pressure switch across the filter shall initiate a filter alarm when the pressure drop across the filter reaches the setpoint.

3.3.22.5 Freeze Protection

All Modes - A freezestat, located as shown, shall stop the supply fan, cause the outside air, return air, and relief air dampers to return to their normal position, and shall initiate a low temperature alarm if the temperature drops below the freezestat's setpoint. Return to the normal mode of operation shall require manual reset at the freezestat. The DDC system shall monitor the freezestat through auxiliary contacts and shall indicate an alarm condition when the freezestat trips.

3.3.22.6 Direct Expansion Cooling Coil

a. Occupied and Ventilation Delay Modes - The stages of cooling shall be controlled according to the space temperature.

b. Unoccupied Mode - Cooling shall be off.

3.3.22.7 Economizer Control

The DDC system shall accept the signal of an outside air temperature sensing element and transmitter and the signal of a return air temperature sensing element and transmitter. The DDC system shall perform switchover between outside air economizer control mode and minimum outside air mode. Until the return air temperature rises above the setpoint, the DDC system shall hold the system in the minimum outside air mode. When the return air temperature rises above the setpoint, the DDC system shall place the AHU in the economizer mode or in the minimum outside air mode, as determined by a comparison of the outside air and return air temperatures in accordance with the differential temperature setpoints. When the outside air temperature is low with respect to the return air temperature, the AHU shall be in the economizer mode. When the DDC system places the control system in the minimum outside air mode, the outside air damper shall be open to the minimum outdoor air setting.

3.3.22.8 Space Temperature Sequenced Heating and Cooling Control

When the DDC system is in the economizer mode, it shall maintain the setpoint as shown from the signal of a space temperature sensor and transmitter. On a rise in space temperature, the DDC system shall first gradually close the heating coil valve. After passing through a deadband, the DDC system shall gradually operate the outside air damper to admit outside air beyond the minimum quantity and after the outside air damper is fully open the DDC system shall operate the stages of cooling in sequence. When the DDC system is in the minimum outside air mode, the outside air damper shall be open to the minimum outside air setting. On a rise in space temperature, the DDC system shall first gradually close the heating coil valve. After passing through a deadband, the DDC system shall operate the stages of cooling in sequence.

3.3.22.9 Emergency Fan Shutdown

All Modes - Smoke detectors in the supply air and return air ductwork shall stop the supply fan and initiate a smoke alarm if smoke is detected at either location. Restarting the supply fan shall require manual reset at the smoke detector.

3.4 COMMISSIONING PROCEDURES

3.4.1 Evaluations

The Contractor shall make the observations, adjustments, calibrations, measurements, and tests of the control systems, set the time schedule, and make any necessary control system corrections to ensure that the systems function as described in the sequence of operation.

3.4.1.1 Item Check

Signal levels shall be recorded for the extreme positions of each controlled device. An item-by-item check of the sequence of operation requirements shall be performed using Steps 1 through 4 in the specified control system commissioning procedures. Steps 1, 2, and 3 shall be performed with the HVAC system shut down; Step 4 shall be performed after the HVAC systems have been started. External input signals to the DDC system (such as starter auxiliary contacts, and external systems) may be

simulated in steps 1, 2, and 3. With each operational mode signal change, DDC system output relay contacts shall be observed to ensure that they function.

3.4.1.2 Weather Dependent Test Procedures

Weather dependent test procedures that cannot be performed by simulation shall be performed in the appropriate climatic season. When simulation is used, the actual results shall be verified in the appropriate season.

3.4.1.3 Two-Point Accuracy Check

A two-point accuracy check of the calibration of each HVAC control system sensing element and transmitter shall be performed by comparing the DDC system readout to the actual value of the variable measured at the sensing element and transmitter or airflow measurement station location. Digital indicating test instruments shall be used, such as digital thermometers, motor-driven psychrometers, and tachometers. The test instruments shall be at least twice as accurate as the specified sensing element-to-DDC system readout accuracy. The calibration of the test instruments shall be traceable to National Institute Of Standards And Technology standards. The first check point shall be with the HVAC system in the shutdown condition, and the second check point shall be with the HVAC system in an operational condition. Calibration checks shall verify that the sensing element-to-DDC system readout accuracies at two points are within the specified product accuracy tolerances. If not, the device shall be recalibrated or replaced and the calibration check repeated.

3.4.1.4 Insertion and Immersion Temperatures

Insertion temperature and immersion temperature sensing elements and transmitter-to-DDC system readout calibration accuracy shall be checked at one physical location along the axis of the sensing element.

3.4.1.5 Averaging Temperature

Averaging temperature sensing element and transmitter-to-DDC system readout calibration accuracy shall be checked every 2 feet along the axis of the sensing element in the proximity of the sensing element, for a maximum of 10 readings. These readings shall then be averaged.

3.4.2 Space Temperature Controlled Perimeter Radiation

The heating medium shall be turned on, and the thermostat temperature setpoint shall be raised. The valve shall open. The thermostat temperature shall be lowered and the valve shall close. The thermostat shall be set at the setpoint shown.

3.4.3 Unit Heater and Cabinet Unit Heater

The "OFF/AUTO" switch shall be placed in the "OFF" position. Each space thermostat temperature setting shall be turned up so that it makes contact to turn on the unit heater fans. The unit heater fans shall not start. The "OFF/AUTO" switch shall be placed in the "AUTO" position. It shall be ensured that the unit heater fans start. Each space thermostat temperature setting shall be turned down, and the unit heater fans shall stop. The thermostats shall be set at their temperature setpoints. The results of testing of one of each type of unit shall be logged.

3.4.4 Gas-Fired Infrared Heater

Each space thermostat temperature setting shall be turned up so that it makes contact to turn on the infrared heater; it shall be ensured that the heater turns on. Each space thermostat temperature shall be turned down and it shall be ensured that the infrared heater turns off. The thermostats shall be set at their temperature setpoints. The results of testing of one of each type of unit shall be logged.

3.4.5 All-Air Small Packaged Unitary

The schedules shall be manually entered for day temperature and night temperature setpoints as shown. The fan "AUTO/ON" switch shall be set to "ON." The time shall be manually entered as "DAY." The "HEATING/COOLING" switch shall be set to "HEATING" and it shall be ensured that cooling is off. The temperature setpoint shall be raised and it shall be ensured that heating starts. The "HEATING/COOLING" switch shall be set to "COOLING" and it shall be ensured that heat is off. The temperature setpoint shall be lowered and it shall be ensured that cooling starts. The fan "AUTO/ON" switch shall be set to "AUTO" and the foregoing procedure repeated. The fan shall start and stop automatically with the starting and stopping of heating and cooling. The time shall be manually entered as "NIGHT." The foregoing procedures shall be repeated. When the system is verified as operational, the correct "DAY" and "NIGHT" temperature settings shall be restored and the correct time restored. The power to the thermostat shall be shut off and it shall be verified that the thermostat clock keeps time. The results of testing of one of each type of unit shall be logged.

3.4.6 Fan Coil Unit

The dual-temperature hydronic system shall be set to heating. Each space thermostat temperature setting shall be turned up so that it makes contact and turns the fan coil unit on. It shall be ensured that the fan coil unit fan starts and the valves open to flow through the coils. Each space thermostat temperature setting shall be turned down and it shall be ensured that the fan coil unit fans stop. It shall be ensured that the valves close to flow through the coils. The dual-temperature hydronic system shall be switched to cooling. Each space thermostat temperature setting shall be turned up and it shall be ensured that contact is broken and the fan coil unit fans stop. It shall be ensured that the valves close to flow through the coil. Each space thermostat temperature setting shall be turned down. It shall be ensured that the fan coil unit fans start and the valves open to flow through the coils. The thermostats shall be set at their temperature setpoints. The results of testing of one of each type of unit shall be logged.

3.4.7 Central Plant Hydronic Heating with Steam/Hot Water Converter

Installation shall be as follows:

a. Step 1 - System Inspection: The HVAC system shall be observed in its shutdown condition. Power and main air shall be available where required. The converter valve shall be closed.

b. Step 2 - Calibration Accuracy Check with HVAC System Shutdown: Readings shall be taken with a digital thermometer at each temperature sensing element location. Each temperature shall be read at the DDC controller, and the thermometer and DDC system readings logged. The calibration accuracy of the sensing element-to-DDC system readout for

outside air temperature and hydronic system supply temperature shall be checked.

c. Step 3 - Actuator Range Adjustments: A signal shall be applied to the actuator, through an operator entered value to the DDC system. The proper operation of the actuators and positions for all valves shall be verified. The signal shall be varied from live zero to full range, and it shall be verified that the actuators travel from zero stroke to full stroke within the signal range. It shall be verified that all sequenced actuators move from zero stroke to full stroke in the proper direction and move the connected device in the proper direction from one extreme position to the other.

d. Step 4 - Control System Commissioning:

(1) The two-point calibration sensing element-to-DDC system readout accuracy check for the outside air temperature shall be performed. Any necessary software adjustments to setpoints or parameters shall be made to achieve the outside air temperature schedule.

(2) A signal shall be applied to simulate that the outside air temperature is above the setpoint. It shall be verified that pump [_____] stops. A signal shall be applied to simulate that the outside air temperature is below the setpoint. It shall be verified that pump [_____] starts.

(3) The two-point calibration accuracy check of the sensing element-to-DDC system readout for the system supply temperature shall be performed. The system supply temperature setpoint shall be set for the temperature schedule as shown. Signals of 8 ma and 16 ma shall be sent to the DDC system from the outside air temperature sensor, to verify that the supply temperature setpoint changes to the appropriate values.

(4) The control system shall be placed in the occupied mode. The calibration accuracy check of sensing element-to-DDC system readout shall be performed for each space temperature sensor and the values logged. Each space temperature setpoint shall be set as shown. The control system shall be placed in the unoccupied mode, and it shall be verified that each space temperature setpoint changes to the unoccupied mode setting.

3.4.8 Single Building Hydronic Heating with Hot Water Boiler

Steps for installation shall be as follows:

a. Step 1 - System Inspection: The HVAC system shall be observed in its shutdown condition. It shall be verified that power and main air are available where required.

b. Step 2 - Calibration Accuracy Check with HVAC System Shutdown: Readings shall be taken with a digital thermometer at each temperature sensing element location. Each temperature shall be read at the DDC controller, and the thermometer and DDC system readings logged. The calibration accuracy of the sensing element-to-DDC system readout for outside air temperature and system supply temperature shall be checked.

c. Step 3 - Actuator Range Adjustments: A signal shall be applied to

the actuator through an operator entered value to the DDC system. The proper operation of the actuators and positioners for all valves shall be verified visually. The signal shall be varied from live zero to full range, and it shall be verified that the actuators travel from zero stroke to full stroke within the signal range. It shall be verified that all sequenced actuators move from zero stroke to full stroke in the proper direction, and move the connected device in the proper direction from one extreme position to the other.

d. Step 4 - Control System Commissioning:

(1) The two-point calibration sensing element-to-DDC system readout accuracy check for the outside air temperature shall be performed. Any necessary software adjustments to setpoints or parameters shall be made to achieve the outside air temperature schedule.

(2) The outside air temperature shall be simulated through an operator entered value to be above the setpoint. It shall be verified that pumps [_____] and boiler [_____] stop. A value shall be entered to simulate that the outside air temperature is below the setpoint as shown. It shall be verified that pumps [_____] start and boiler [_____] operates.

(3) The two-point calibration accuracy check of the sensing element-to-DDC system readout for the hydronic system supply temperature shall be performed. The supply temperature setpoint shall be set for the temperature schedule as shown. Signals of 8 ma and 16 ma shall be sent to the DDC system from the outside air temperature sensor, to verify that the supply temperature setpoint changes to the appropriate values.

(4) The control system shall be placed in the occupied mode. The calibration accuracy check of sensing element-to-DDC system readout shall be performed for each space temperature sensor and the values logged. Each space temperature setpoint shall be set as shown. The control system shall be placed in the unoccupied mode, and it shall be verified that each space temperature setpoint changes to the unoccupied mode setting.

3.4.9 Central Plant High Temperature Hot Water Hydronic Heating

Steps for installation shall be as follows:

a. Step 1 - System Inspection: The HVAC system shall be observed in its shutdown condition. It shall be verified that power and main air are available where required and that the converter valve is closed.

b. Step 2 - Calibration Accuracy Check with HVAC System Shutdown: Readings shall be taken with a digital thermometer at each temperature sensing element location. Each temperature shall be read at the DDC controller, and the thermometer and DDC system readings logged. The calibration accuracy of the sensing element-to-DDC system readout for outside air temperature and system supply temperature shall be checked.

c. Step 3 - Actuator Range Adjustments: A signal shall be applied to the actuator through an operator entered value to the DDC system. The proper operation of the actuators and positioners for all valves shall be verified. The signal shall be varied from live zero to full range, and it

shall be verified that the actuators travel from zero stroke to full stroke within the signal range. It shall be verified that all sequenced actuators move from zero stroke to full stroke in the proper direction, and move the connected device in the proper direction from one extreme position to the other.

d. Step 4 - Control System Commissioning:

(1) The two-point calibration sensing element-to-DDC system readout accuracy check for the outside air temperature shall be performed. Any necessary software adjustments shall be made to setpoints or parameters to achieve the outside air temperature schedule.

(2) The outside air temperature shall be simulated through an operator entered value to be above the setpoint. It shall be verified that pump [_____] stops and the high-temperature hot-water control valve closes. A value shall be entered to simulate that the outside air temperature is below the setpoint as shown. It shall be verified that pump [_____] starts.

(3) The two-point calibration accuracy check of the sensing element-to-DDC system readout for the hydronic system supply temperature shall be performed. The supply temperature setpoint shall be set for the temperature schedule as shown. Signals of 8 ma and 16 ma shall be sent to the DDC system from the outside air temperature sensor, to verify that the supply temperature setpoint changes to the appropriate values. A high temperature condition shall be initiated in the hydronic system supply line by lowering the thermostat setting. It shall be verified that the high-temperature hot water shutoff valve closes and an alarm is initiated. The thermostat shall be set at the setting shown, the safety circuit shall be manually reset, and it shall be verified that the shutoff valve opens and a return-to-normal signal is sent.

(4) The control system shall be placed in the occupied mode. The calibration accuracy check of sensing element-to-DDC system readout shall be performed for each space temperature sensor and the values logged. Each space temperature setpoint shall be set as shown. The control system shall be placed in the unoccupied mode, and it shall be verified that each space temperature setpoint changes to the unoccupied mode setting.

3.4.10 Central Plant Dual Temperature Hydronic

Steps for installation shall be as follows:

a. Step 1 - System Inspection: The HVAC system shall be observed in its shutdown condition. The system shall be checked to see that power and main air are available where required, and that the converter steam hot water control valve is closed.

b. Step 2 - Calibration Accuracy Check with HVAC System Shutdown: Readings shall be taken with a digital thermometer at each temperature sensing element location. Each temperature shall be read at the DDC controller, and the thermometer and DDC system readings logged. The calibration accuracy of the sensing element-to-DDC system readout for outside air temperature, hydronic system supply and return temperatures shall be checked.

c. Step 3 - Actuator Range Adjustments: A signal shall be applied to the actuator through an operator entered value to the DDC system. The proper operation of the actuators and positioners for all valves shall be visually verified. The signal shall be varied from live zero to full range, and it shall be verified that the actuators travel from zero stroke to full stroke within the signal range. It shall be verified that all sequenced actuators move from zero stroke to full stroke in the proper direction, and move the connected device in the proper direction from one extreme position to the other.

d. Step 4 - Control System Commissioning:

(1) The two-point calibration sensing element-to-DDC system readout accuracy check for the outside air temperature shall be performed. Any necessary software adjustments shall be made to setpoints or parameters to achieve the outside air temperature schedule.

(2) The control system shall be indexed to the heating mode and it shall be verified that the changeover valves open to flow through the converter and close to flow from central plant chilled water.

(3) The outside air temperature shall be simulated through an operator entered value to be above the setpoint. It shall be verified that pump [_____] stops. A value shall be entered to simulate that the outside air temperature is below the setpoint. It shall be verified that pump [_____] starts.

(4) The two-point calibration accuracy check of the sensing element-to-DDC system readout for the hydronic system supply temperature shall be performed. The supply temperature shall be set for the temperature schedule. Signals of 8 ma and 16 ma shall be sent to the DDC system from the outside air temperature sensor, to verify that the supply temperature setpoint changes to the appropriate values.

(5) The two-point accuracy check of the sensing element-to-DDC system readout for the hydronic system return temperature shall be performed. The return water temperature setpoint shall be set to the setpoint. The system shall be placed in the unoccupied mode.

(6) The control system shall be indexed to the cooling mode. It shall be verified that the converter control valve closes and that pump [_____] continues to operate until the return water temperature falls below its setpoint. It shall be verified that when the return water temperature falls below the setpoint that the changeover valves close to flow through the converter and open to flow from central plant chilled water and that Pump [_____] stops.

(7) The control system shall be placed in the occupied mode and it shall be verified that pump [_____] starts.

3.4.11 Central Plant High Temperature Hot Water Dual Temperature Hydronic

Steps for installation shall be as follows:

a. Step 1 - System Inspection: The HVAC system shall be observed in its shutdown condition. The system shall be checked to see that power and main air are available where required, and that the converter high temperature hot water control valve is closed.

b. Step 2 - Calibration Accuracy Check with HVAC System Shutdown: Readings shall be taken with a digital thermometer at each temperature sensing element location. Each temperature shall be read at the DDC controller, and the thermometer and DDC system readings logged. The calibration accuracy of the sensing element-to-DDC system readout for outside air temperature and hydronic system supply temperature shall be checked.

c. Step 3 - Actuator Range Adjustments: A signal shall be applied to the actuator through an operator entered value to the DDC panel. The proper operation of the actuators and positioners for all valves shall be visually verified. The signal shall be varied from live zero to full range, and it shall be verified that the actuators travel from zero stroke to full stroke within the signal range. It shall be verified that all sequenced actuators move from zero stroke to full stroke in the proper direction, and move the connected device in the proper direction from one extreme position to the other.

d. Step 4 - Control System Commissioning:

(1) The two-point calibration sensing element-to-DDC system readout accuracy check for the outside air temperature shall be performed. Any necessary software adjustments shall be made to setpoints or parameters to achieve the outside air temperature schedule.

(2) The control system shall be indexed to the heating mode and it shall be verified that the changeover valves open to flow through the converter and close to flow from central plant chilled water.

(3) The outside air temperature shall be simulated through an operator entered value to be above the setpoint. It shall be verified that pump [_____] stops and the high-temperature hot water shutoff valve closes. A value shall be entered to simulate that the outside air temperature is below the setpoint as shown. It shall be verified that pump [_____] starts.

(4) The two-point calibration accuracy check of the sensing element-to-DDC system readout for the hydronic system supply temperature shall be performed. The supply temperature setpoint shall be set for the temperature schedule. Signals of 8 ma and 16 ma shall be sent to the DDC system from the outside air temperature sensor, to verify that the supply temperature setpoint changes to the appropriate values.

(5) The two-point accuracy check of the sensing element-to-DDC system readout for the hydronic system return temperature shall be performed. The return water temperature setpoint shall be set to the setpoint. The control system shall be placed in the unoccupied mode.

(6) The control system shall be indexed to the cooling mode. It shall be verified that the converter control valve closes and that

pump [_____] continues to operate until the return water temperature falls below its setpoint. It shall be verified that when the return water temperature falls below the setpoint, the changeover valves close to flow through the converter and open to flow from central plant chilled water and that Pump [_____] stops.

(7) The control system shall be placed in the occupied mode and it shall be verified that pump [_____] starts.

3.4.12 Single Building Dual Temperature Hydronic

Steps for installation shall be as follows:

a. Step 1 - System Inspection: The HVAC system shall be observed in its shutdown condition. It shall be verified that power and main air are available where required.

b. Step 2 - Calibration Accuracy Check with HVAC System Shutdown: Readings shall be taken with a digital thermometer at each temperature sensing element location. Each temperature shall be read at the DDC controller, and the thermometer and DDC system readings logged. The calibration accuracy of the sensing element-to-DDC system readout for outside air temperature, hydronic system supply and return temperatures shall be checked.

c. Step 3 - Actuator Range Adjustments: A signal shall be applied to the actuator, through an operator entered value. The proper operation of the actuators and positioners for all valves shall be visually verified. The signal shall be varied from live zero to full range, and actuator travel from zero stroke to full stroke within the signal range shall be verified. It shall be verified that all sequenced actuators move from zero stroke to full stroke in the proper direction, and move the connected device in the proper direction from one extreme position to the other.

d. Step 4 - Control System Commissioning:

(1) The two-point calibration sensing element-to-DDC system readout accuracy check for the outside air temperature shall be performed. Any necessary software adjustments shall be made to setpoints or parameters to achieve the outside air temperature schedule.

(2) The control system shall be indexed to the heating mode and it shall be verified that chiller [_____] is shut down and that distribution pump [_____] continues to operate until the time delay expires. It shall be verified that the changeover valves open to flow through boiler [_____] and close to flow through chiller [_____] upon expiration of the time delay.

(3) The outside air temperature shall be simulated to be above the setpoint through an operator entered value. It shall be verified that distribution pump [_____] stops, boiler [_____] is stopped, [boiler pump [_____] is stopped,] and control of the hydronic heating system control valve is disabled. A value shall be entered to simulate that the outside air temperature is below the setpoint. It shall be verified that distribution pump [_____] starts, boiler [_____] is started, [boiler pump [_____] is started,] and control of the hydronic heating system control valve is enabled.

(4) The two-point calibration accuracy check of the sensing element-to-DDC system readout for the hydronic system supply temperature shall be performed. The supply temperature setpoint shall be set for the temperature schedule as shown. Signals of 8 ma and 16 ma shall be sent to the DDC system from the outside air temperature sensor, to verify that the supply temperature setpoint changes to the appropriate values.

(5) The two-point accuracy check of sensing element-to-DDC system readout for the hydronic system return temperature shall be performed. It shall be verified that the return water temperature setpoint is set to the setpoint. The control system shall be placed in the unoccupied mode.

(6) The control system shall be indexed to the cooling mode. It shall be verified that boiler [_____] shuts down, [boiler pump [_____] shuts down,] and distribution pump [_____] continues to operate until the return water temperature falls below its setpoint. It shall be verified that when the return water temperature falls below its setpoint that the changeover valves close to flow through the boiler [_____] and open to flow through chiller [_____] and distribution pump [_____] stops.

(7) The control system shall be placed in the occupied mode and it shall be verified that distribution pump [_____] starts and chiller operation is enabled.

(8) The control system shall be placed in the unoccupied mode and it shall be verified that chiller [_____] shuts down and distribution pump [_____] continues to operate until the expiration of the time delay and then stops.

3.4.13 Heating and Ventilating Unit

Steps for installation are as follows:

a. Step 1 - System Inspection: The HVAC system shall be observed in its shutdown condition. The system shall be checked to see that power and main air are available where required, the outside air damper and relief air damper are closed, and the return air damper is open.

b. Step 2 - Calibration Accuracy Check with HVAC System Shutdown: Readings shall be taken with a digital thermometer at each temperature sensing element location. Each temperature shall be read at the DDC controller, and the thermometer and DDC system readings logged. The calibration accuracy of the sensing element-to-DDC system readout for space temperature shall be checked.

c. Step 3 - Actuator Range Adjustments: A signal shall be applied to the actuator through an operator entered value to the DDC system. The proper operation of the actuators and positioners for all dampers and valves shall be verified. The signal shall be varied from live zero to full range, and that the actuators travel from zero stroke to full stroke within the signal range shall be verified. It shall be verified that all sequenced and parallel-operated actuators move from zero stroke to full stroke in the proper direction, and move the connected device in the proper direction from one extreme position to the other.

d. Step 4 - Control System Commissioning:

(1) With the fan ready to start, the system shall be placed in the ventilation delay mode and in the occupied mode through operator entered values. It shall be verified that supply fan [_____] starts. It shall be verified that the outside air and relief air dampers are closed, the return air damper is open, and the heating coil valve is under control, by artificially changing the space temperature through operator entered values. The system shall be placed out of the ventilation delay mode, and it shall be verified that the outside air, return air, and relief air dampers come under control by simulating a change in space temperature.

(2) The control system shall be placed in the minimum outside air mode. It shall be verified that the outside air damper opens to minimum position.

(3) The calibration accuracy check of sensing element-to-DDC system readout for the space temperature shall be performed. The space temperature setpoint shall be set as shown.

(4) The control system shall be placed in the unoccupied mode, and it shall be verified that the HVAC system shuts down, and the control system assumes the specified shutdown conditions. The space temperature shall be artificially changed to below the night setback setpoint, and it shall be verified that the HVAC system starts; the space temperature shall be artificially changed to above the night setback setpoint, and it shall be verified that the HVAC system stops. The night setback temperature setpoint shall be set as shown.

(5) With the HVAC system running, a filter differential pressure switch input signal shall be simulated, at the device. It shall be verified that the filter alarm is initiated. The differential pressure switch shall be set at the setpoint as shown.

(6) With the HVAC system running, a freezestat trip input signal shall be simulated at the device. HVAC system shutdown shall be verified. It shall be verified that a low temperature alarm is initiated. The freezestat shall be set at the setpoint. The HVAC system shall be restarted by manual restart and it shall be verified that the alarm returns to normal.

(7) With the HVAC system running, a smoke detector trip input signal shall be simulated at each detector, and verification of control device actions and interlock functions as described in the Sequence of Operation shall be made. Simulation shall be performed without false-alarming any Life Safety systems. It shall be verified that the HVAC system shuts down and that the smoke detector alarm is initiated. The detectors shall be reset. The HVAC system shall be restarted by manual reset, and it shall be verified that the alarm signal is changed to a return-to-normal signal.

3.4.14 Multizone Control System with Return Fan

Steps for installation shall be as follows:

a. Step 1 - System Inspection: The HVAC system shall be observed in

its shutdown condition. The system shall be checked to see that power and main air are available where required; that the outside air damper, relief air damper, and cooling coil valve are closed; and that the return air damper is open.

b. Step 2 - Calibration Accuracy Check with HVAC System Shutdown: Readings shall be taken with a digital thermometer at each temperature-sensing element location. Each temperature shall be read at the DDC controller, and the thermometer and DDC system readings logged. The calibration accuracy of the sensing element-to-DDC system readout for outside air, return air, mixed air, cold-deck, and hot-deck temperatures shall be checked.

c. Step 3 - Actuator Range Adjustments: A signal shall be applied to the actuator through an operator entered value to the DDC system. The proper operation of the actuators and positioners for all dampers and valves shall be verified. The signal shall be varied from live zero to full range, and it shall be verified that the actuators travel from zero stroke to full stroke within the signal range. It shall be verified that all sequenced and parallel-operated actuators move from zero stroke to full stroke in the proper direction, and move the connected device in the proper direction from one extreme position to the other.

d. Step 4 - Control System Commissioning:

(1) With the fans ready to start, the system shall be placed in the ventilation delay mode and in the occupied mode, and it shall be verified that supply fan [_____] and return fan [_____] start. It shall be verified that the outside air and relief air dampers are closed, and the return air damper is open, by artificially changing the mixed air temperature through operator entered values. It shall be verified that the heating and cooling coil valves are under control, by artificially changing the hot and cold deck temperatures through operator entered values. The system shall be placed out of the ventilation delay mode through an operator entered value and it shall be verified that the outside air, return air, and relief air dampers come under control, by artificially changing the mixed air temperature.

(2) The control system shall be placed in the minimum outside air mode. It shall be verified that the outside air damper opens to minimum position.

(3) The economizer mode shall be simulated by a change in the outside air temperature and the return air temperature through operator entered values and it shall be verified that the system goes into the economizer mode. The mixed air temperature shall be artificially changed through operator entered values to slightly open the outside air damper and the second point of the two-point calibration accuracy check of sensing element-to-DDC system readout for outside air, return air, and mixed air temperatures shall be performed. The temperature setpoint shall be set as shown.

(4) The two-point calibration sensing element-to-DDC system readout accuracy check for the outside air temperature shall be performed. Any necessary software adjustments shall be made to setpoints or parameters to achieve the outside air temperature schedule as shown.

(5) The two-point calibration accuracy check of sensing element-to-DDC system readout for outside air and hot-deck temperatures shall be performed. The hot deck temperature setpoint shall be set for [_____] degrees F at 20-ma input and [_____] degrees F at 4-ma input. The outside air temperature shall be artificially changed through operator entered values. Three values shall be entered simulating outside air temperature changes. The values shall be selected at midrange, lower 1/3 range, and upper 1/3 range of the temperature schedule. It shall be verified that the hot-deck temperature setpoint tracks the schedule. The hot-deck temperature setpoint shall be set for the existing outside air temperature as shown. A change shall be simulated in the coil discharge air temperature through an operator entered value and it shall be verified that the control valve is modulated.

(6) The two-point calibration accuracy check of sensing element-to-DDC system readout for the hot-deck temperature shall be performed. The hot-deck temperature setpoint shall be set as shown. A change shall be simulated in the coil discharge air temperature through an operator entered value and it shall be verified that the control valve is modulated.

(7) The two-point calibration accuracy check of sensing element-to-DDC system readout for the cold-deck temperature shall be performed. The cold-deck temperature setpoint shall be set as shown. A change shall be simulated in the coil discharge air temperature through an operator entered value and it shall be verified that the control valve is modulated.

(8) The control system shall be placed in the unoccupied mode, and it shall be verified that the HVAC system shuts down, and the control system assumes the specified shutdown conditions. The space temperature shall be artificially changed to below the night setback setpoint and it shall be verified that the HVAC system starts; the space temperature shall be artificially changed to above the night setback setpoint, and it shall be verified that the HVAC system stops. The night setback temperature setpoint shall be set as shown.

(9) With the HVAC system running, a filter differential pressure switch input signal shall be simulated at the device. It shall be verified that the filter alarm is initiated. The differential pressure switch shall be set at the setpoint.

(10) With the HVAC system running, a freezestat trip input signal shall be simulated at the device. HVAC system shutdown shall be verified. It shall be verified that a low temperature alarm is initiated. The freezestat shall be set at the setpoint. The HVAC system shall be restarted by manual restart and it shall be verified that the alarm returns to normal.

(11) With the HVAC system running, a smoke detector trip input signal shall be simulated at each detector, and control device actions and interlock functions as described in the Sequence of Operation shall be verified. Simulation shall be performed without false-alarming any Life Safety systems. It shall be verified that the HVAC system shuts down and that the smoke

detector alarm is initiated. The detectors shall be reset. HVAC system shall be restarted by manual reset, and it shall be verified that the alarm signal is changed to a return-to-normal signal.

(12) The temperature setpoint of each zone thermostat shall be raised and it shall be verified that the zone damper closes to the cold-deck and opens to the hot-deck. Each zone thermostat shall be calibrated and set at its setpoint as shown.

3.4.15 Dual-Duct Multizone Control System with Return Fan

Steps for installation shall be as follows:

a. Step 1 - System Inspection: The HVAC system shall be observed in its shutdown condition. The system shall be checked to see that power and main air are available where required; that the outside air damper, relief air damper, and cooling coil valve are closed; and that the return air damper is open.

b. Step 2 - Calibration Accuracy Check with HVAC System Shutdown: Readings shall be taken with a digital thermometer at each temperature-sensing element location. Each temperature shall be read at the DDC controller, and the thermometer and DDC system readings logged. The calibration accuracy of the sensing element-to-DDC system readout for outside air, return air, mixed air, cold-deck, and hot-deck temperatures shall be checked.

c. Step 3 - Actuator Range Adjustments: A signal shall be applied to the actuator through an operator entered value to the DDC system. The proper operation of the actuators and positioners for all dampers and valves shall be verified. The signal shall be varied from live zero to full range, and it shall be verified that the actuators travel from zero stroke to full stroke within the signal range. It shall be verified that all sequenced and parallel-operated actuators move from zero stroke to full stroke in the proper direction, and move the connected device in the proper direction from one extreme position to the other.

d. Step 4 - Control System Commissioning:

(1) With the fans ready to start, the control system shall be placed in the ventilation delay mode and in the occupied mode, and it shall be verified that supply fan [_____] and return fan [_____] start. It shall be verified that the outside air and relief air dampers are closed, and the return air damper is open, by artificially changing the mixed air temperature through operator entered values. It shall be verified that the heating and cooling coil valves are under control, by artificially changing the hot and cold deck temperatures through operator entered values. The system shall be placed out of the ventilation delay mode through an operator entered value and it shall be verified that the outside air, return air, and relief air dampers come under control, by artificially changing the mixed air temperature.

(2) The control system shall be placed in the minimum outside air mode. It shall be verified that the outside air damper opens to minimum position.

(3) The economizer mode shall be simulated by a change in the outside air temperature and the return air temperature through operator entered values and it shall be verified that the system goes into the economizer mode. The mixed air temperature shall be artificially changed through operator entered values to slightly open the outside air damper and the second point of the two-point calibration accuracy check of sensing element-to-DDC system readout for outside air, return air, and mixed air temperatures shall be performed. The temperature setpoint shall be set as shown.

(4) The two-point calibration sensing element-to-DDC system readout accuracy check for the outside air temperature shall be performed. Any necessary software adjustments shall be made to setpoints or parameters to achieve the outside air temperature schedule as shown.

(5) The two-point calibration accuracy check of sensing element-to-DDC system readout for outside air and hot-deck temperatures shall be performed. The hot-deck temperature setpoint shall be set for [_____] degrees F at 20-ma input and [_____] degrees F at 4-ma input. The outside air temperature shall be artificially changed through operator entered values. Three values shall be entered simulating outside air temperature changes. The values shall be selected at midrange, lower 1/3 range, and upper 1/3 range of the temperature schedule. It shall be verified that the hot-deck temperature setpoint tracks the schedule. The hot-deck temperature setpoint shall be set for the existing outside air temperature as shown. A change shall be simulated in the coil discharge air temperature through an operator entered value and it shall be verified that the control valve is modulated.

(6) The two-point calibration accuracy check of sensing element-to-DDC system readout for the hot-deck temperature shall be performed. The hot-deck temperature setpoint shall be set as shown. A change shall be simulated in the coil discharge air temperature through an operator entered value and it shall be verified that the control valve is modulated.

(7) The two-point calibration accuracy check of sensing element-to-DDC system readout for the cold-deck temperature shall be performed. The cold-deck temperature setpoint shall be set as shown. A change shall be simulated in the coil discharge air temperature through an operator entered value and it shall be verified that the control valve is modulated.

(8) The control system shall be placed in the unoccupied mode, and it shall be verified that the HVAC system shuts down, and the control system assumes the specified shutdown conditions. The space temperature shall be artificially changed to below the night setback setpoint and it shall be verified that the HVAC system starts; the space temperature shall be artificially changed to above the night setback setpoint, and it shall be verified that the HVAC system stops. The night setback temperature setpoint shall be set as shown.

(9) With the HVAC system running, a filter differential pressure switch input signal shall be simulated at the device. It shall be

verified that the filter alarm is initiated. The differential pressure switch shall be set at the setpoint.

(10) With the HVAC system running, a freezestat trip input signal shall be simulated at the device. HVAC system shutdown shall be verified. It shall be verified that a low temperature alarm is initiated. The freezestat shall be set at the setpoint. The HVAC system shall be restarted by manual restart and it shall be verified that the alarm returns to normal.

(11) With the HVAC system running, a smoke detector trip input signal shall be simulated at each detector, and control device actions and interlock functions as described in the Sequence of Operation shall be verified. Simulation shall be performed without false-alarming any Life Safety systems. It shall be verified that the HVAC system shuts down and that the smoke detector alarm is initiated. The detectors shall be reset. HVAC system shall be restarted by manual reset, and it shall be verified that the alarm signal is changed to a return-to-normal signal.

(12) The setpoint of each zone thermostat shall be raised and it shall be verified that the dual-duct terminal box damper closes to the cold duct and opens to the hot duct. Each zone thermostat shall be calibrated and set at its setpoint as shown.

3.4.16 Bypass Multizone with Return Fan

Steps for installation shall be as follows:

a. Step 1 - System Inspection: The HVAC system shall be observed in its shutdown condition. The system shall be checked to see that power and main air are available where required, the outside air damper, relief air damper, and cooling coil valve are closed, and the return air damper is open.

b. Step 2 - Calibration Accuracy Check with HVAC System Shutdown: Readings shall be taken with a digital thermometer at each temperature sensing element location. Each DDC controller display shall be read, and the thermometer and DDC system display readings logged. The calibration accuracy of the sensing element-to-DDC system readout for outside air, return air, mixed air, cold-deck temperatures shall be checked.

c. Step 3 - Actuator Range Adjustments: A signal shall be applied to the actuator through an operator entered value to the DDC system. The proper operation of the actuators and positioners for all dampers and valves shall be visually verified. The signal shall be varied from live zero to full range, and it shall be verified that the actuators travel from zero stroke to full stroke within the signal range. It shall be verified that all sequenced and parallel-operated actuators move from zero stroke to full stroke in the proper direction, and move the connected device in the proper direction from one extreme position to the other.

d. Step 4 - Control System Commissioning:

(1) With the fans ready to start, the control system shall be placed in the ventilation delay mode and in the occupied mode, and it shall be verified that supply fan [_____] and return fan [_____] start. It shall be verified that the outside air and

relief air dampers are closed, the return air damper is open, and the heating and cooling coil valves are under control, by simulating a change in the temperature of the cooling coil discharge air and the space temperature through operator entered values. The control system shall be placed out of the ventilation delay mode, and it shall be verified that the outside air, return air, and relief air dampers come under control, by simulating a change in the mixed air temperature through operator entered values.

(2) The control system shall be placed in the minimum outside air mode. It shall be verified that the outside air damper opens to minimum position.

(3) The economizer mode shall be simulated by a change in the outside air temperature and the return air temperature through operator entered values and it shall be verified that the system goes into the economizer mode. The mixed air temperature shall be artificially changed through operator entered values to slightly open the outside air damper and the second point of the two-point calibration accuracy check of sensing element-to-DDC system readout for outside air, return air, and mixed air temperatures shall be performed. The temperature setpoint shall be set as shown.

(4) The two-point calibration accuracy check of sensing element-to-DDC system readout for the cold-deck temperature shall be performed. The cold-deck temperature setpoint shall be set as shown. A change shall be simulated in the coil discharge air temperature through an operator entered value and it shall be verified that the control valve is modulated.

(5) The control system shall be placed in the unoccupied mode and it shall be verified that the HVAC system shuts down, and the control system assumes the specified shutdown conditions. The space temperature shall be artificially changed to below the night setback temperature setpoint, and it shall be verified that the HVAC system starts; the space temperature shall be artificially changed to above the night setback setpoint, and it shall be verified that the HVAC system stops. The night setback temperature setpoint shall be set at the setpoint as shown.

(6) With the HVAC system running, a filter differential pressure switch input signal shall be simulated at the device. It shall be verified that the filter alarm is initiated. The differential pressure switch shall be set at the setpoint.

(7) With the HVAC system running, a freezestat trip input signal shall be simulated at the device. HVAC system shutdown shall be verified. It shall be verified that a low-temperature alarm is initiated. The freezestat shall be set at the setpoint. The HVAC system shall be restarted by manual restart and it shall be verified that the alarm returns to normal.

(8) With the HVAC system running, a smoke detector trip input signal shall be simulated at each detector, and control device actions and interlock functions as described in the Sequence of Operation shall be verified. Simulation shall be performed without false-alarming any Life Safety systems. It shall be

verified that the HVAC system shuts down and that the smoke detector alarm is initiated. The detectors shall be reset. The HVAC system shall be restarted by manual reset, and it shall be verified that the alarm signal is changed to a return-to-normal signal.

(9) The setpoint of each room thermostat shall be changed and correct operation of the zone damper and the heating coil valve shall be verified for each zone. Each room thermostat shall be calibrated and set at its setpoint.

3.4.17 Variable Air Volume Control System - Without Return Fan

Steps for installation shall be as follows:

a. Step 1 - System Inspection: The HVAC system shall be observed in its shutdown condition. The system shall be checked to see that power and main air are available where required, the outside air and relief air dampers are closed, the return air damper is open, and the supply fan inlet vanes and cooling coil valve are closed.

b. Step 2 - Calibration Accuracy Check with HVAC System in Shutdown: Readings shall be taken with a digital thermometer at each temperature sensing element location. Each temperature shall be read at the DDC controller, and the thermometer and DDC system display readings logged. The calibration accuracy of the sensing element-to-DDC system readout for outside air, return air, mixed air, and the cooling coil discharge temperatures shall be checked. The minimum outside air flow shall be read, using a digital indicating velometer, and the velometer and DDC system display readings logged. The flow should read zero.

c. Step 3 - Actuator Range Adjustments: A signal shall be applied to the actuators through an operator entered value to the DDC system. The proper operation of the actuators and positioners for all dampers and valves shall be visually verified. The signal shall be varied from live zero to full range, and it shall be verified that the actuators travel from zero stroke to full stroke within the signal range. It shall be verified that all sequenced and parallel operated actuators move from zero stroke to full stroke in the proper direction, and move the connected device in the proper direction from one extreme position to the other.

d. Step 4 - Control System Commissioning:

(1) With the fan ready to start, the control system shall be placed in the ventilation delay mode and in the occupied mode through operator entered values. It shall be verified that supply fan [_____] starts. It shall be verified that the outside air dampers and relief damper are closed, the return air damper is open, and the cooling coil valve and inlet vanes are under control, by simulating a change in the fan discharge temperature. The system shall be placed out of the ventilation delay mode, and it shall be verified that the economizer outside air and relief air dampers remain closed, the return air damper remains open, and the minimum outside air damper comes under control.

(2) The two-point calibration accuracy check of sensing element-to-DDC system readout for the minimum outside air flow measurement station shall be performed. Force all VAV box dampers to the full open position, turn all exhaust fans off, manually

adjust the supply duct static pressure to achieve the design duct static pressure, and manually adjust the minimum outside air flow to achieve a flow which is approximately 25% less than the desired air flow. Under these conditions, the minimum outside air flow control loop shall be tuned. Confirm stable operation of the minimum outside air flow control loop in response to a process disturbance.

(3) With supply fan [_____] running, a high static pressure input signal shall be simulated at the device, by pressure input to the differential pressure switch sensing device. HVAC system shutdown shall be verified; it shall be verified that the high static pressure alarm is initiated. The differential pressure switch shall be set at the setpoint. The HVAC system shall be restarted by manual reset, and it shall be verified that the high static pressure alarm returns to normal.

(4) The two-point calibration accuracy check for sensing element-to-DDC system readout for the static pressure in the supply duct shall be performed.

(5) The economizer mode shall be simulated by a change in the outside air temperature and the return air temperature through operator entered values and it shall be verified that the system goes into the economizer mode. The mixed air temperature shall be artificially changed through operator entered values to slightly open the economizer outside air damper and the second point of the two-point calibration accuracy check of sensing element-to-DDC system readout for outside air, return air, and mixed air temperatures shall be performed. The temperature setpoint shall be set as shown.

(6) The two-point calibration accuracy check of sensing element-to-DDC system readout for the fan discharge temperature shall be performed. The setpoint for the fan discharge temperature shall be set as shown. A change shall be simulated in the discharge air temperature through an operator entered value and it shall be verified that the control valve is modulated.

(7) The control system shall be placed in the unoccupied mode and it shall be verified that the HVAC system shuts down and the control system assumes the specified shutdown conditions. The space temperature shall be artificially changed to below the night setback temperature setpoint, and it shall be verified that the HVAC system starts; the space temperature shall be artificially changed to above the night setback setpoint, and it shall be verified that the HVAC system stops. The night setback temperature setpoint shall be set at the setpoint shown.

(8) With the HVAC system running, a filter differential pressure switch input signal shall be simulated at the device. It shall be verified that the filter alarm is initiated. The differential pressure switch shall be set at the setpoint. This shall be performed for each filter.

(9) With the HVAC system running, a freezestat trip input signal shall be simulated at the device. HVAC system shutdown shall be verified. It shall be verified that a low temperature alarm is initiated. The freezestat shall be set at the setpoint. The HVAC

system shall be restarted by manual restart and it shall be verified that the alarm returns to normal.

(10) With the HVAC system running, a smoke detector trip input signal shall be simulated at each detector, and control device actions and interlock functions as described in the Sequence of Operation shall be verified. Simulation shall be performed without false-alarming any Life Safety systems. It shall be verified that the HVAC system shuts down and the smoke detector alarm is initiated. The detectors shall be reset. The HVAC system shall be restarted by manual reset, and it shall be verified that the alarm returns to normal.

(11) Velocity setpoints shall be set for minimum and maximum flow and temperature setpoints for the heating/cooling dead band, for each VAV terminal unit. The actions of the controller, the operation of the damper, and the operation of heating shall be verified. It shall be verified that space temperature is maintained.

3.4.18 Variable Air Volume Control System - With Return Fan

Steps for installation shall be as follows:

a. Step 1 - System Inspection: The HVAC system shall be observed in its shutdown condition. It shall be verified that power and main air are available where required, and that the outside air and relief air dampers are closed, the return air damper is open, and that the supply fan and return/relief fan inlet vanes and cooling coil valve are closed.

b. Step 2 - Calibration Accuracy Check with HVAC System Shutdown: Readings shall be taken with a digital thermometer at each temperature sensing element location. Each temperature shall be read at the DDC controller, and the thermometer and DDC system display readings logged. The calibration accuracy of the sensing element-to-DDC system readout for outside air, return air, mixed air, and cooling coil discharge temperatures shall be checked. The minimum outside air flow, supply air flow, and return air flow shall be read, using a digital indicating velometer, and the velometer and DDC system display readings logged. The flows should read zero.

c. Step 3 - Actuator Range Adjustments: A signal shall be applied to the actuators through an operator entered value at the DDC system. The proper operation of the actuators and positioners for all dampers and valves shall be visually verified. The signal shall be varied from live zero to full range, and actuator travel shall be verified from zero stroke to full stroke within the signal range. It shall be verified that all sequenced and parallel operated actuators move from zero stroke to full stroke in the proper direction, and move the connected device in the proper direction from one extreme position to the other.

d. Step 4 - Control System Commissioning:

(1) With the fans ready to start, the control system shall be placed in the ventilation delay mode and in the occupied mode, and it shall be verified that supply fan [_____] and return fan [_____] start. It shall be verified that the outside air dampers and relief air damper are closed, the return air damper is open, and the cooling coil valve and inlet vanes are under control, by

simulating a change in the fan discharge temperature. The system shall be placed out of the ventilation delay mode, and it shall be verified that the economizer outside air and relief air dampers remain closed, the return air damper remains open, and the minimum outside air damper comes under control.

(2) The two-point calibration accuracy check of sensing element-to-DDC system readout for the minimum outside air flow measurement station shall be performed. Force all VAV box dampers to the full open position, turn all exhaust fans off, manually adjust the supply duct static pressure to achieve the design duct static pressure, manually adjust the output to the return fan to establish the design differential flow difference between the supply and return duct flows, and manually adjust the minimum outside air flow to achieve a flow which is approximately 25% less than the desired air flow. Under these conditions, the minimum outside air flow control loop shall be tuned. Confirm stable operation of the minimum outside air flow control loop in response to a process disturbance.

(3) The starter switch of return fan [_____] shall be turned to the "OFF" position, and the inlet vane damper shall be opened. With supply fan [_____] running, a high static pressure input signal shall be simulated at the device by a pressure input to the sensing device. HVAC system shutdown shall be observed, and it shall be verified that the high static alarm is initiated. The HVAC system shall be restarted by manual reset, and it shall be verified that the high static alarm returns to normal.

(4) The two-point accuracy check of sensing element-to-DDC system readout for the static pressure in the supply duct shall be performed.

(5) Each VAV terminal unit controller's minimum flow and maximum flow setpoints shall be set at the same setting. This will prevent the VAV box damper from modulating under space temperature control and will achieve a constant supply duct system pressure drop. The return fan inlet vane shall be placed under control, and the starter switch shall be turned to the "AUTO" position so that the fan starts. The two-point calibration accuracy check of sensing element-to-DDC system readout for the air flow measurement stations shall be performed. The supply fan inlet vane shall be operated manually to change the supply fan flow, and the control system shall be set to control at [_____] cfm at 4-ma input and [_____] cfm at 20-ma input. The supply fan flow shall be changed to verify that the return flow setpoint tracks the supply fan flow with the proper flow differential.

(6) The economizer mode shall be simulated by a change in the outside air temperature and the return air temperature through operator entered values and it shall be verified that the system goes into the economizer mode. The mixed air temperature shall be artificially changed through operator entered values to slightly open the economizer outside air damper and the second point of the two-point calibration accuracy check of sensing element-to-DDC system readout for outside air, return air, and mixed air temperatures shall be performed. The temperature setpoint shall be set as shown.

(7) The two-point calibration accuracy check of sensing element-to-DDC system readout for the fan discharge temperature shall be performed. The setpoint for the fan discharge temperature shall be set as shown. A change shall be simulated in the discharge air temperature through an operator entered value and it shall be verified that the control valve is modulated.

(8) The control system shall be placed in the unoccupied mode and it shall be verified that the HVAC system shuts down and the control system assumes the specified shutdown conditions. The space temperature shall be artificially changed to below the night setback temperature setpoint, and it shall be verified that the HVAC system starts; the space temperature shall be artificially changed to above the night setback temperature setpoint and it shall be verified that the HVAC system stops. The night setback temperature setpoint shall be set at the setpoint.

(9) With the HVAC system running, a filter differential pressure switch input signal shall be simulated at the device. It shall be verified that the filter alarm is initiated. The differential pressure switch shall be set at the setpoint as shown. This shall be performed for each filter.

(10) With the HVAC system running, a freezestat trip input signal shall be simulated at the device. HVAC system shutdown shall be verified. It shall be verified that a low temperature alarm is initiated. The freezestat shall be set at the setpoint as shown. The HVAC system shall be restarted by manual restart and it shall be verified that the alarm returns to normal.

(11) With the HVAC system running, a smoke detector trip input signal shall be simulated at each device. Control device actions and interlock functions as described in the Sequence of Operation shall be verified. Simulation shall be performed without false-alarming any Life Safety systems. It shall be verified that the HVAC system shuts down and the smoke detector alarm is initiated. The detectors shall be reset. The HVAC system shall be restarted by manual reset, and the alarm return-to-normal shall be verified.

(12) For each VAV terminal unit, velocity setpoints shall be set for minimum and maximum flow, and temperature setpoints for the heating/cooling dead band. The actions of the controller, the operation of the damper, and the operation of heating shall be verified. It shall be verified that space temperature is maintained.

3.4.19 Single Zone with Hydronic Heating and Cooling Coils; No Return Fan

Steps for installation shall be as follows:

a. Step 1 - System Inspection: The HVAC system shall be verified in its shutdown condition. The system shall be checked to see that power and main air are available where required, that the outside air damper, relief air damper, and cooling coil valve are closed, and that the return air damper is open.

b. Step 2 - Calibration Accuracy Check with HVAC System Shutdown: Readings shall be taken with a digital thermometer at each temperature

sensing element location. Each temperature shall be read at the DDC controller, and the thermometer and DDC system display readings logged. The calibration accuracy of the sensing element-to-DDC system readout for outside air, return air, and space temperatures shall be checked.

c. Step 3 - Actuator Range Adjustments: A signal shall be applied to the actuator through an operator entered value to the DDC system. The proper operation of the actuators and positioners for all dampers and valves shall be visually verified. The signal shall be varied from live zero to full range, and the actuator travel from zero stroke to full stroke within the signal range shall be verified. It shall be verified that all sequenced and parallel-operated actuators move from zero stroke to full stroke in the proper direction, and move the connected device in the proper direction from one extreme position to the other.

d. Step 4 - Control System Commissioning:

(1) With the fan ready to start, the control system shall be placed in the ventilation delay mode and in the occupied mode, and it shall be verified that supply fan [_____] starts. It shall be verified that the outside air and relief air dampers are closed, the return air damper is open, and the heating coil and cooling coil valves are under control, by simulating a change in the space temperature through an operator entered value. The control system shall be placed out of the ventilation delay mode, and it shall be verified that the outside air, return air, and relief air dampers come under control by simulating a change in the space temperature.

(2) The control system shall be placed in the minimum outside air mode. It shall be verified that the outside air damper opens to minimum position.

(3) The economizer mode shall be simulated by a change in the outside air temperature and the return air temperature through operator entered values and it shall be verified that the system goes into the economizer mode. The space temperature shall be artificially changed through operator entered values to slightly open the outside air damper and the second point of the two-point calibration accuracy check of sensing element-to-DDC system readout for outside air, return air, and space temperatures shall be performed. The space temperature setpoint shall be set as shown.

(4) An unoccupied mode signal shall be applied, and it shall be verified that the HVAC system shuts down, and the control system assumes the specified shutdown conditions. The space temperature shall be artificially changed to below the night setback temperature setpoint, and it shall be verified that the HVAC system starts; the space temperature shall be set to above the night setback setpoint, and it shall be verified that the HVAC system stops. The night setback temperature setpoint shall be set at the setpoint as shown.

(5) With the HVAC system running, a filter differential pressure switch input signal shall be simulated at the device. It shall be verified that the filter alarm is initiated. The differential pressure switch shall be set at the setpoint.

(6) With the HVAC system running, a freezestat trip input signal

shall be simulated at the device. HVAC system shutdown shall be verified. It shall be verified that a low temperature alarm is initiated. The freezestat shall be set at the setpoint. The HVAC system shall be restarted by manual restart and it shall be verified that the alarm returns to normal.

(7) With the HVAC system running, a smoke detector trip input signal at each detector shall be simulated, and control device actions and interlock functions as described in the Sequence of Operation shall be verified. Simulation shall be performed without false-alarming any Life Safety systems. It shall be verified that the HVAC system shuts down and that the smoke detector alarm is initiated. The detectors shall be reset. The HVAC system shall be restarted by manual reset, and it shall be verified that the alarm returns to normal.

3.4.20 Single Zone with Dual Temperature Coil; No Return Fan

Steps for installation shall be as follows:

a. Step 1 - System Inspection: The HVAC system shall be verified in its shutdown condition. The system shall be checked to see that power and main air are available where required, the outside air damper, relief air damper, and cooling coil valve are closed, and that the return air damper is open.

b. Step 2 - Calibration Accuracy Check with HVAC System Shutdown: Readings shall be taken with a digital thermometer at each temperature sensing element location. Each temperature shall be read at the DDC controller, and the thermometer and DDC system display readings logged. The calibration accuracy of the sensing element-to-DDC system readout shall be checked for outside air, return air, and space temperatures.

c. Step 3 - Actuator Range Adjustments: A signal shall be applied to the actuator through an operator entered value to the DDC system. The proper operation of the actuators and positioners for all dampers and valves shall be visually verified. The signal shall be varied from live zero to full range, and it shall be verified that the actuators travel from zero stroke to full stroke within the signal range. It shall be verified that all sequenced and parallel operated actuators move from zero stroke to full stroke in the proper direction and move the connected device in the proper direction from one extreme position to the other.

d. Step 4 - Control System Commissioning:

(1) With the fan ready to start, the control system shall be placed in the ventilation delay mode and in the occupied mode, and it shall be verified that supply fan [_____] starts. It shall be verified that the outside air and relief air dampers are closed, the return air damper is open, and the dual-temperature coil control valve is under control, by simulating a change in the space temperature. The control system shall be placed out of the ventilation delay mode, and it shall be verified that the outside air, return air, and relief air dampers come under control by simulating a change in the controller output.

(2) The control system shall be placed in the minimum outside air mode. It shall be verified that the outside air damper opens to minimum position.

(3) The economizer mode shall be simulated by a change in the outside air temperature and the return air temperature through operator entered values and it shall be verified that the system goes into the economizer mode. The space temperature shall be artificially changed through operator entered values to slightly open the outside air damper and the second point of the two-point calibration accuracy check of sensing element-to-DDC system readout for outside air, return air, and space temperatures shall be performed. The space temperature setpoint shall be set as shown.

(4) Dual-temperature hydronic changeover operation of aquastat shall be simulated. Control system selection of opposite season space temperature control shall be verified by artificially changing the dual-temperature hydronic temperature.

(5) The control system shall be placed in the unoccupied mode, and it shall be verified that the HVAC system shuts down, and the control system assumes the specified shutdown conditions. The space temperature shall be artificially changed to below the night setback temperature setpoint, and it shall be verified that the HVAC system starts; the space temperature shall be artificially changed to above the night setback temperature setpoint and it shall be verified that the HVAC system stops. The night setback temperature setpoint shall be set at the setting as shown.

(6) With the HVAC system running, a filter differential pressure switch input signal shall be simulated at the device. It shall be verified that the filter alarm is initiated. The differential pressure switch shall be set at the setpoint.

(7) With the HVAC system running, a freezestat trip input signal shall be simulated at the device. HVAC system shutdown shall be verified. It shall be verified that a low temperature alarm is initiated. The freezestat shall be set at the setpoint. The HVAC system shall be restarted by manual restart and it shall be verified that the alarm returns to normal.

(8) With the HVAC system running, a smoke detector trip input signal shall be simulated at each detector, and control device actions and interlock functions as described in the Sequence of Operation shall be verified. Simulation shall be performed without false-alarming any Life Safety systems. It shall be verified that the HVAC system shuts down and that the smoke detector alarm is initiated. The detectors shall be reset. The HVAC system shall be restarted by manual reset, and it shall be verified that the alarm returns to normal.

3.4.21 Single Zone with Humidification; No Return Fan

Steps for installation shall be as follows:

a. Step 1 - System Inspection: The HVAC system shall be verified in its shutdown condition. The system shall be checked to see that power and main air are available where required, and that the outside air damper, humidifier valve and cooling coil valve are closed.

b. Step 2 - Calibration Accuracy Check with HVAC System Shutdown:

Readings shall be taken with a digital thermometer at each temperature sensing elements location. Each temperature shall be read at the DDC controller, and the thermometer and DDC system display readings logged. The calibration accuracy of the sensing element-to-DDC system readout for outside air, return air, mixed air, and cooling coil discharge temperatures shall be checked. A motor-driven psychrometer shall be used to check the wet-bulb and dry-bulb temperatures of the humidifier discharge air and of the air in the space, and the psychrometer, and DDC system display readings shall be read and logged.

c. Step 3 - Actuator Range Adjustments: A signal shall be applied to the actuator, through an operator entered value to the DDC system. The proper operation of the actuators and positioners for all dampers and valves shall be visually verified. The signal shall be varied from live zero to full range, and the actuators travel shall be verified from zero stroke to full stroke within the signal range. It shall be verified that all sequenced and parallel operated actuators move from zero stroke to full stroke in the proper direction, and move the connected device in the proper direction from one extreme position to the other.

d. Step 4 - Control System Commissioning:

(1) With the fan ready to start, the control system shall be placed in the ventilation delay mode and in the occupied mode, and it shall be verified that supply fan [_____] starts. It shall be verified that the outside air damper is closed, and the heating coil, cooling coil, and humidifier valves are under control, by simulating a change in the space humidity and the space temperature. The system shall be placed out of the ventilation delay mode, and it shall be verified that the outside air damper opens.

(2) The two-point calibration accuracy check of sensing element-to-DDC system readout for the preheat coil discharge air temperature shall be performed. The setpoint for the coil discharge air temperature shall be set as shown. A change shall be simulated in the coil discharge air temperature through an operator entered value and it shall be verified that the preheat coil control valve is modulated.

(3) The calibration accuracy check for sensing element-to-DDC system readout for the space temperature shall be performed. The space temperature setpoint shall be set as shown. A change shall be simulated in the space temperature and it shall be verified that the heating coil valve and cooling coil valve are under control.

(4) The calibration accuracy check for sensing element-to-DDC system readout for the space relative humidity shall be performed. An identical calibration accuracy check for the duct relative humidity shall be performed. The space relative humidity and the duct relative humidity setpoints shall be set as shown. A change shall be simulated in the space relative humidity or in the duct relative humidity and it shall be verified that the humidifier valve and cooling coil valve are under control.

(5) The hydronic heating temperature controller "MANUAL/AUTO" station shall be indexed to the "MANUAL" position. The controller output shall be changed to open the converter valve slightly. The

2-point calibration accuracy check for sensing element-to-DDC system readout for the space temperature shall be performed. The temperature setpoint shall be set as shown.

(6) The control system shall be placed in the unoccupied mode and it shall be verified that the HVAC system shuts down, and the control system assumes the specified shutdown conditions. The space temperature shall be artificially changed to below the night setback temperature setpoint and it shall be verified that the HVAC system starts; the space temperature shall be artificially changed to above the night setback temperature setpoint, and it shall be verified that the HVAC system stops. The night setback temperature setpoint shall be set at the setpoint as shown.

(7) With the HVAC system running, a filter differential pressure switch input signal shall be simulated at the device. It shall be verified that the filter alarm is initiated. The differential pressure switch shall be set at the setpoint.

(8) With the HVAC system running, a freezestat trip input signal shall be simulated at the device. HVAC system shutdown shall be verified. It shall be verified that a low temperature alarm is initiated. The freezestat shall be set at the setpoint. The HVAC system shall be restarted by manual restart and it shall be verified that the alarm returns to normal.

(9) With the HVAC system running, a smoke detector trip input signal shall be simulated at each detector, and control device actions and interlock functions as described in the Sequence of Operation shall be verified. Simulation shall be performed without false-alarming any Life Safety systems. It shall be verified that the HVAC system shuts down and that the smoke detector alarm is initiated. The detectors shall be reset. The HVAC system shall be restarted by manual reset, and it shall be verified that the alarm returns to normal.

3.4.22 Single Zone with Hydronic Heating Direct Expansion Cooling

Steps for installation shall be as follows:

a. Step 1 - System Inspection: The HVAC system shall be verified in its shutdown condition. The system shall be checked to see that power and main air are available where required, the outside air damper and relief air damper are closed, all stages of cooling are off, and that the return air damper is open.

b. Step 2 - Calibration Accuracy Check with HVAC System Shutdown: Readings shall be taken with a digital thermometer at each temperature sensing element location. Each temperature shall be read at the DDC controller, and the thermometer and DDC system display readings logged. The calibration accuracy of the sensing element-to-DDC system readout for outside air, return air, and space temperatures shall be checked.

c. Step 3 - Actuator Range Adjustments: A signal shall be applied to the actuator, through an operator entered value to the DDC system. The proper operation of the actuators and positioners for all dampers and valves shall be visually verified. The signal shall be varied from live zero of 4 ma to 20 ma, and it shall be verified that the actuators travel from zero stroke to full stroke within the signal range. It shall be

verified that all sequenced and parallel operated actuators move from zero stroke to full stroke in the proper direction and move the connected device in the proper direction from one extreme position to the other. Example: NC actuators are closed at 4 ma and are open at 20 ma. The signal levels that move the controlled device to its extreme positions shall be logged. The operating points of the sequence shall be set for each stage of cooling and the proper operation of each stage shall be verified.

d. Step 4 - Control System Commissioning:

(1) With the fan ready to start, the control system shall be placed in the ventilation delay mode and in the occupied mode, and it shall be verified that supply fan [_____] starts. It shall be verified that the outside air and relief air dampers are closed, the return air damper is open, and the heating coil and stages of cooling are under control, by simulating a change in the space temperature. The control system shall be placed out of the ventilation delay mode, and it shall be verified that the outside air, return air, and relief air dampers come under control by simulating a change in the mixed air temperature.

(2) The control system shall be placed in the minimum outside air mode. It shall be verified that the outside air damper opens to minimum position.

(3) The economizer mode shall be simulated by a change in the outside air temperature and the return air temperature through operator entered values and it shall be verified that the system goes into the economizer mode. The space temperature shall be artificially changed through operator entered values to slightly open the outside air damper and the second point of the two-point calibration accuracy check of sensing element-to-DDC system readout for outside air, return air, and space temperatures shall be performed. The space temperature setpoint shall be set as shown. A change in space temperature shall be simulated and it shall be verified that the heating coil valve and the stages of D/X cooling operate in sequence as shown.

(4) The control system shall be placed in the unoccupied mode, and it shall be verified that the HVAC system shuts down, and the control system assumes the specified shutdown conditions. The space temperature shall be artificially changed to below the night setback temperature setpoint, and it shall be verified that the HVAC system starts; the space temperature shall be artificially changed to above the night setback temperature setpoint, and it shall be verified that the HVAC system stops. The night setback temperature setpoint shall be set at the setpoint as shown.

(5) With the HVAC system running, a filter differential pressure switch input signal shall be simulated at the device. It shall be verified that the filter alarm is initiated. The differential pressure switch shall be set at the setpoint as shown.

(6) With the HVAC system running, a freezestat trip input signal shall be simulated at the device. HVAC system shutdown shall be verified. It shall be verified that a low-temperature alarm is initiated. The freezestat shall be set at the setpoint. The HVAC system shall be restarted by manual restart and it shall be verified that the alarm returns to normal.

(7) With the HVAC system running, a smoke detector trip input signal shall be simulated at each detector, and control device actions and interlock functions as described in the Sequence of Operation shall be verified. Simulation shall be performed without false-alarming any Life Safety systems. It shall be verified that the HVAC system shuts down and that the smoke detector alarm is initiated. The detectors shall be reset. The HVAC system shall be restarted by manual reset, and it shall be verified that the alarm returns to normal.

3.5 BALANCING, COMMISSIONING, AND TESTING

3.5.1 Coordination with HVAC System Balancing

Commissioning of the control system, except for tuning of controllers, shall be performed prior to or simultaneous with HVAC system balancing. The contractor shall tune the HVAC control system after all air system and hydronic system balancing has been completed, minimum damper positions set and a report has been issued.

3.5.2 Control System Calibration, Adjustments, and Commissioning

Control system commissioning shall be performed for each HVAC system, using test plans and procedures previously approved by the Government. The Contractor shall provide all personnel, equipment, instrumentation, and supplies necessary to perform commissioning and testing of the HVAC control system. All instrumentation and controls shall be calibrated and the specified accuracy shall be verified using test equipment with calibration traceable to NIST standards. Wiring shall be tested for continuity and for ground, open, and short circuits. Tubing systems shall be tested for leaks. Mechanical control devices shall be adjusted to operate as specified. HVAC control panels shall be pretested off-site as a functioning assembly ready for field connections, calibration, adjustment, and commissioning of the operational HVAC control system. Control parameters and logic (virtual) points including control loop setpoints, gain constants, and integral constraints, shall be adjusted before the system is placed on line. Communications requirements shall be as indicated. Written notification of any planned commissioning or testing of the HVAC Control systems shall be given to the Government at least 14 calendar days in advance.

3.5.3 Performance Verification Test

The Contractor shall demonstrate compliance of the HVAC control system with the contract documents. Using test plans and procedures previously approved by the Government, the Contractor shall demonstrate all physical and functional requirements of the project. The performance verification test shall show, step-by-step, the actions and results demonstrating that the control systems perform in accordance with the sequences of operation. The performance verification test shall not be started until after receipt by the Contractor of written permission by the Government, based on Government approval of the Commissioning Report and completion of balancing. The tests shall not be conducted during scheduled seasonal off periods of base heating and cooling systems.

3.5.4 Endurance Test

The endurance test shall be used to demonstrate the specified overall

system reliability requirement of the completed system. The endurance test shall not be started until the Government notifies the Contractor in writing that the performance verification test is satisfactorily completed. The Government may terminate the testing at any time when the system fails to perform as specified. Upon termination of testing by the Government or by the Contractor, the Contractor shall commence an assessment period as described for Phase II. Upon successful completion of the endurance test, the Contractor shall deliver test reports and other documentation as specified to the Government prior to acceptance of the system.

a. Phase I (Testing). The test shall be conducted 24 hours per day, 7 days per week, for 15 consecutive calendar days, including holidays, and the system shall operate as specified. The Contractor shall make no repairs during this phase of testing unless authorized by the Government in writing.

b. Phase II (Assessment). After the conclusion of Phase I, the Contractor shall identify failures, determine causes of failures, repair failures, and deliver a written report to the Government. The report shall explain in detail the nature of each failure, corrective action taken, results of tests performed, and shall recommend the point at which testing should be resumed. After delivering the written report, the Contractor shall convene a test review meeting at the jobsite to present the results and recommendations to the Government. As a part of this test review meeting, the Contractor shall demonstrate that all failures have been corrected by performing appropriate portions of the performance verification test. Based on the Contractor's report and test review meeting, the Government may require that the Phase I test be totally or partially rerun. After the conclusion of any retesting which the Government may require, the Phase II assessment shall be repeated as if Phase I had just been completed.

3.5.5 Posted and Panel Instructions

Posted and Panel Instructions, showing the final installed conditions, shall be provided for each system. The posted instructions shall consist of laminated half-size drawings and shall include the control system schematic, equipment schedule, sequence of operation, wiring diagram, communication network diagram, and valve and damper schedules. The posted instructions shall be permanently affixed, by mechanical means, to a wall near the control panel. Panel instructions shall consist of laminated letter-size sheets and shall include a Routine Maintenance Checklist and as-built configuration check sheets. Panel instructions and one copy of the Operation and Maintenance Manuals, previously described herein, shall be placed inside each control panel or permanently affixed, by mechanical means, to a wall near the panel.

3.6 TRAINING

3.6.1 Training Course Requirements

A training course shall be conducted for [_____] operating staff members designated by the Contracting Officer in the maintenance and operation of the system, including specified hardware and software. The training period, for a total of [32] [_____] hours of normal working time, shall be conducted within 30 days after successful completion of the performance verification test. The training course shall be conducted at the project site. Audiovisual equipment and [_____] sets of all other training materials and supplies shall be provided. A training day is defined as 8

hours of classroom instruction, including two 15 minute breaks and excluding lunchtime, Monday through Friday, during the daytime shift in effect at the training facility.

3.6.2 Training Course Content

For guidance in planning the required instruction, the Contractor shall assume that attendees will have a high school education or equivalent, and are familiar with HVAC systems. The training course shall cover all of the material contained in the Operating and Maintenance Instructions, the layout and location of each HVAC control panel, the layout of one of each type of unitary equipment and the locations of each, the location of each control device external to the panels, the location of the compressed air station, preventive maintenance, troubleshooting, diagnostics, calibration, adjustment, commissioning, tuning, and repair procedures. Typical systems and similar systems may be treated as a group, with instruction on the physical layout of one such system. The results of the performance verification test and the calibration, adjustment and commissioning report shall be presented as benchmarks of HVAC control system performance by which to measure operation and maintenance effectiveness.

-- End of Section --

This page was intentionally left blank for duplex printing.

ATTACHMENT NO. 4

REFERENCES

1. UNDER THE FOLDER LABELED “REFERENCES” ON THE CD-ROM ARE ADOBE ACROBAT COPIES OF SELECT AIR FORCE MANUALS (AFJMAN), UNIFIED FACILITIES CRITERIA (UFC) DOCUMENTS, AIR FORCE INSTRUCTIONS (AFI), TECHNICAL INSTRUCTIONS (TI), AIR FORCE HANDBOOKS (AFH), TECHNICAL MANUALS (TM), OMAHA DISTRICT DESIGN GUIDE (ODDG) CHAPTER AND ATTACHMENT, ENTRY CONTROL GATE DESIGN GUIDE (GATE), AND ENGINEERING MANUAL (EM). ALSO UNDER THE SAME FOLDER, ARE MS WORD 2000 COPIES OF THE FOLLOWING DOCUMENTS: STORM WATER POLLUTION PREVENTION PLAN (SWPPP) – SECTION 01565 ATTACHMENT, ADA ARCHTECTURAL DESIGN CHECKLIST LIST – SECTION 01336 ATTACHMENT AND FIRE CODE ANALYSIS – SECTION 01336 ATTACHMENT. THESE REFERENCES ARE REFERRED TO IN THIS RFP.

2. UNDER FOLDER LABELED “ETL” ON THE CD-ROM ARE ADOBE ACROBAT FILES OF VARIOUS ENGINEERING TECHNICAL LETTERS (ETL’S) REFERRED TO IN THIS RFP.

3. UNDER FOLDER LABELED “SCHRIEVER” IS A WEB-BASED INTERACTIVE FILES TO THE SCHRIEVER AFB FACILITIES EXCELLENCE PLAN. DOUBLE-CLICK ON THE “HBA.EXE” EXECUTABLE FILE TO ACCESS THE FACILITIES EXCELLENCE PLAN.

This page was intentionally left blank for duplex printing.

ATTACHMENT NO. 5

(Design Guidance for use to the extent referenced in the RFP Criteria)

CABLE MANAGEMENT COORDINATION SHEET

COMMUNICATIONS CABLE TRAY AND CONDUIT GROUNDING

Cable Management Coordination Sheet

1. All contractors and/or military personnel shall contact Schriever Air Force Base Cable Management Office at 567-7292 or 2546 prior to the following:

- Meetings inherent to base expansion that require new cable routes/new conveyance systems
- Access to manholes and facilities that directly link to existing base conveyance system
- Installation of any communication/signal cables
- Removal of any communication/signal cables

2. Upon notification, Cable Management Office will do the following:

- Attend scheduled meetings
- Notify security police/fire station to allow contractor access to secure areas
- Provide cable routing reports that outline routes and cable numbers for installations
- Provide cable routing reports that reflect deleted cables identified for removal

3. Contractors will route cables per the Cable Management Office routing report and label the cables accordingly as shown in figure 1. Cable Management Office will provide cable labels upon request. Labels should be applied within 12 inches of each termination and both sides of wall penetrations/conduits if possible. Installer judgement will dictate actual application.

4. All cables routed through manholes/handholes must be routed around the circumference of the hole in order to prevent tripping/entanglement hazards upon entry and exit of the holes. See figure 1 (manhole/handhole portion).

5. Newly constructed manholes/handholes shall be linked to the existing manhole/handhole system via conduits and the ducts labeled alpha-numerically (See figure 2). This information will be provided by Cable Management to the contractor and should be used to properly label all new ducts.

6. Each new duct system should be cut flush with the wall/surface it penetrates and have a bell end on it to alleviate cable stress/micro-bends. Outdoor-waterproof caulking should be used to seal the bell end and the penetration so no water/dirt enters the area. All new ducts should also have pull-lines/string installed from point to point.

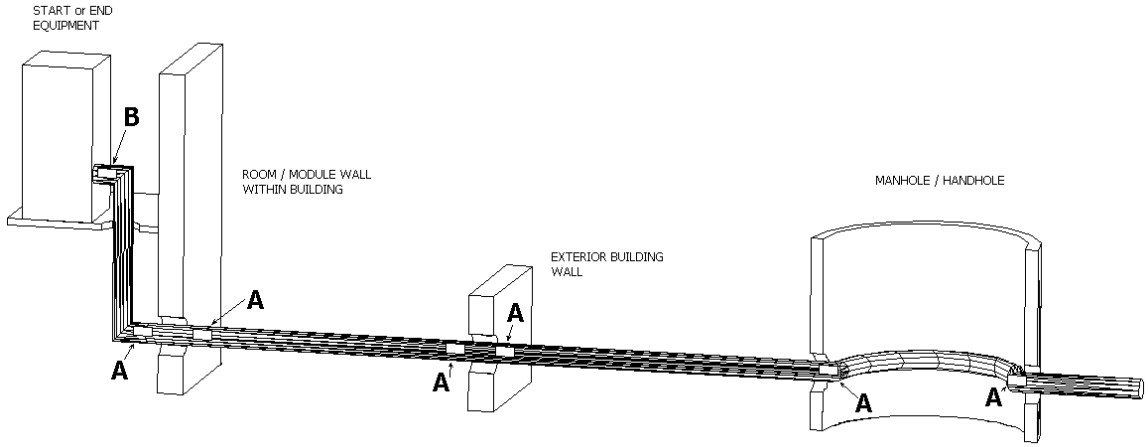

Notes

A. Cable labels at all entry and exit points on route with cable number only.

WX0001

B. Cable also labeled at start and end equipment locations with cable number and start/end equipment numbers.

WX0002
0400-008/003-351
0210-000/101-023

(Typical Start/End Equipment Number Breakdown)

Building #	-	Module #	/	Room #	-	Equipment #
0400	-	008	/	003	-	351

Figure 1: Cable Label Requirements

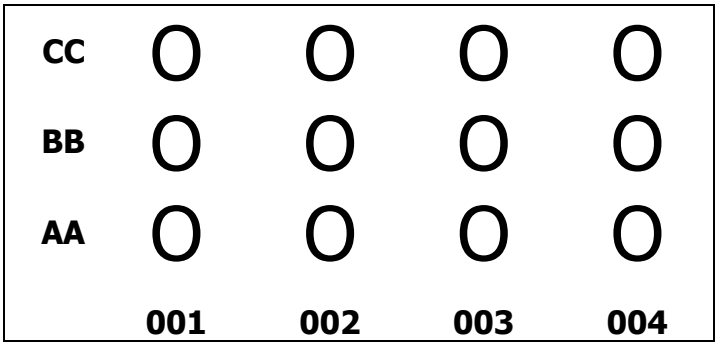

Figure 2: Typical Duct Bank Configuration Within Manholes/Handholes
(Alphanumeric Labeling)

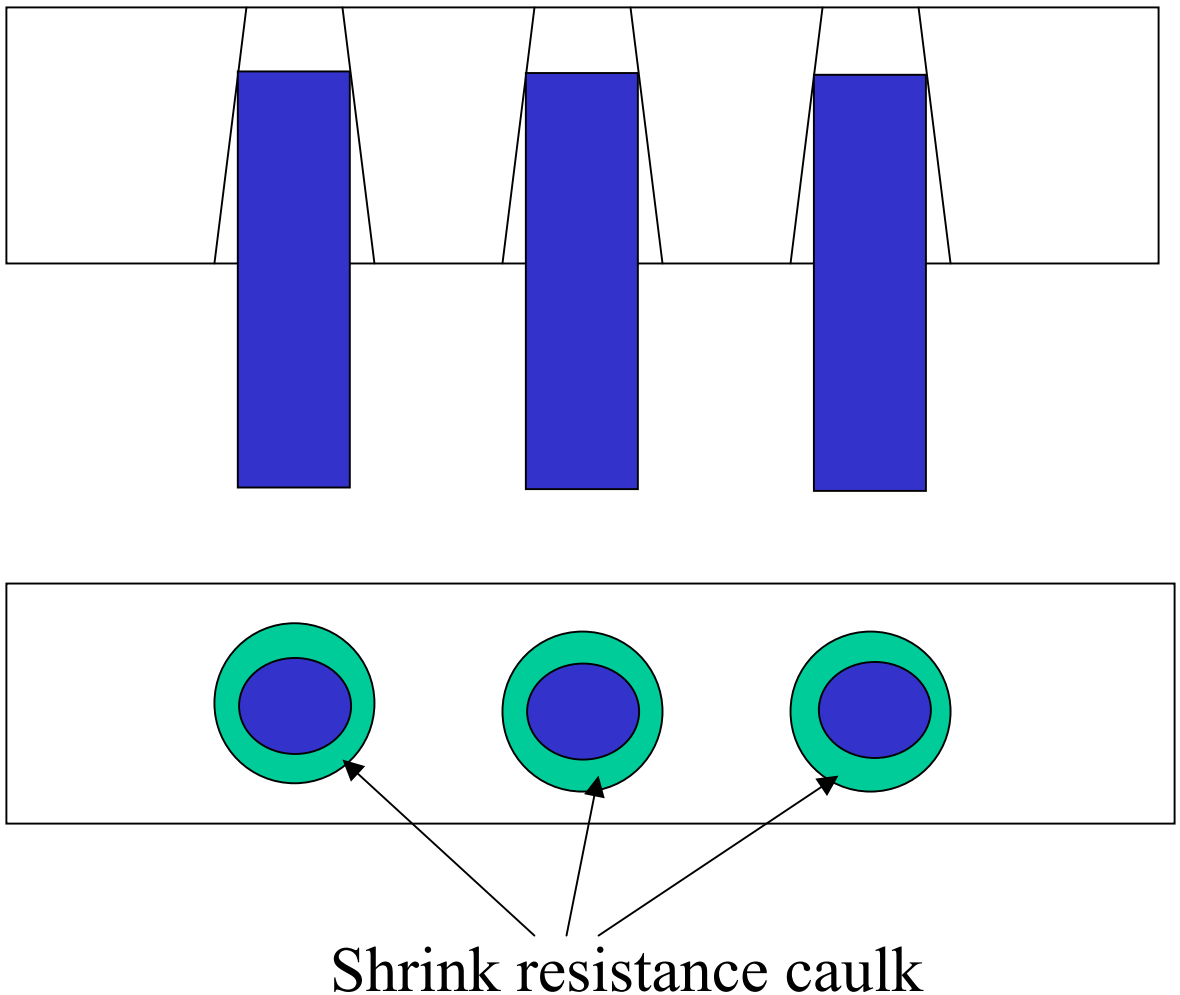
Shrink resistance caulk

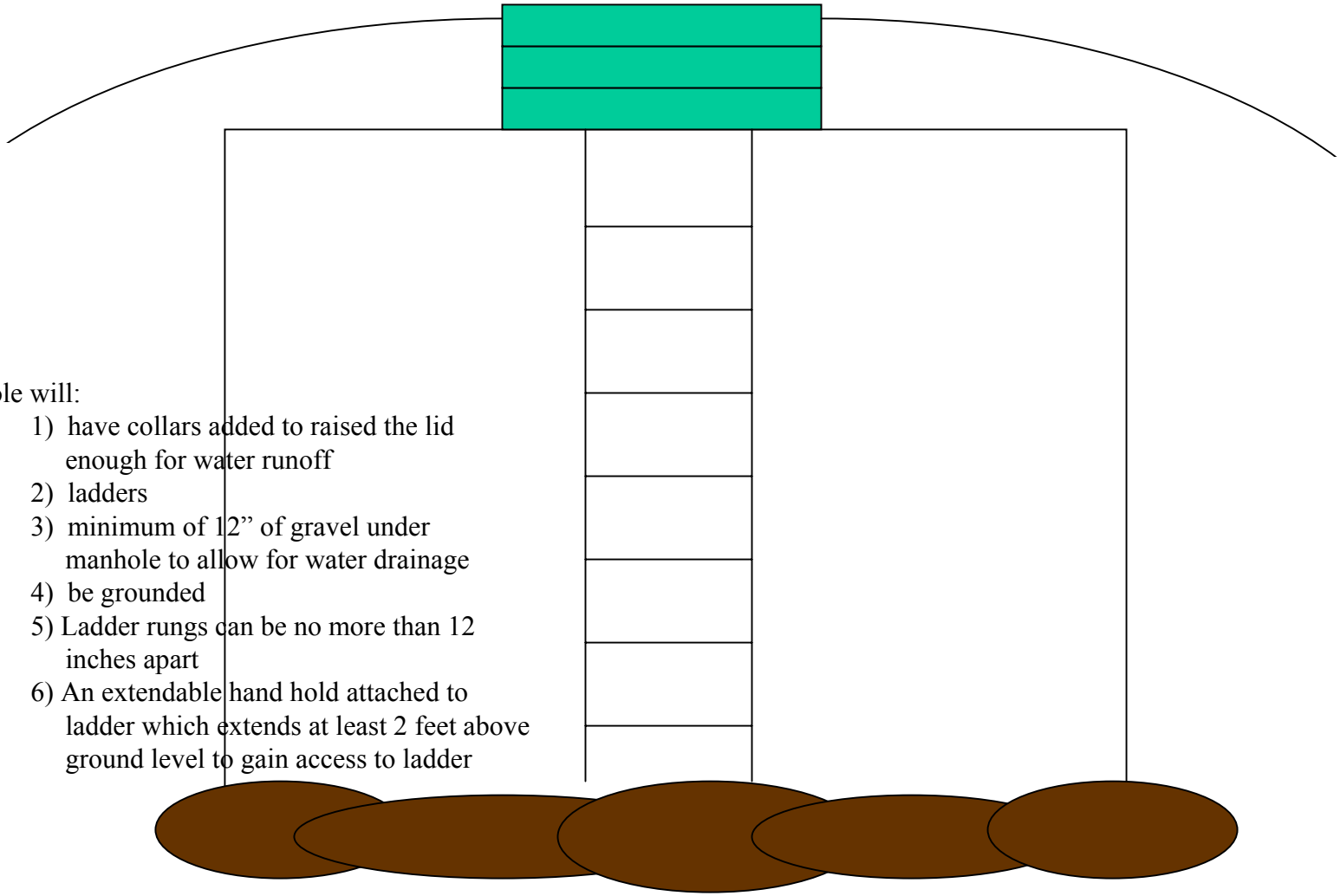

Each manhole will:

1) have collars added to raised the lid enough for water runoff
2) ladders
3) minimum of 12” of gravel under manhole to allow for water drainage
4) be grounded
5) Ladder rungs can be no more than 12 inches apart
6) An extendable hand hold attached to ladder which extends at least 2 feet above ground level to gain access to ladder

This page was intentionally left blank for duplex printing.

ATTACHMENT NO. 6

(Design Guidance for use to the extent referenced in the RFP Criteria)

5OTH SPACE WING INSTRUCTION 33-105 FACILITY INSTALLATION STANDARD

BY ORDER OF THE COMMANDER 50TH SPACE WING

50TH SPACE WING INSTRUCTION 33-105
3 JANUARY 2000

Communications and Information

FACILITY INSTALLATION STANDARD

COMPLIANCE WITH THIS PUBLICATION IS MANDATORY

NOTICE: This publication is available digitally on the 50 SW site at: http://inside/baseim. If you lack access, contact your Publishing Office.

OPR: 850 CS/SCXS
(Gary L. Curtis)
Supersedes SWI 33-105, 01 Dec 97

Certified by: 850 CS/CC
(Lt Col Edwin C. Swedberg)
Pages: 69
Distribution: F

This instruction implements AFPD 33-1, *Command, Control, Communications, and Computer (C4) Systems.* It establishes standards for installation of technical equipment and facility interfaces at Schriever Air Force Base (SAFB). It applies to all agencies performing work at SAFB, regardless of command. It outlines the specific electrical, mechanical and structural standards that alterations, modifications and installations must follow. By implementing these standards, SAFB shall be able to maintain safe installations as well as accurate documentation of those installations. Send comments and suggested improvements on AF Form 847, **'Recommendation for Change of Publication,** through channels to 850 CS/SCXS, 608 Navstar Street, Suite 78, Schriever AFB, CO 80912-6078. The use of a name or mark of any specific manufacturer, commercial product, commodity, or service in this publication does not imply endorsement by the Air Force.

Note: The criteria described in this document were initially compiled from the Facility Development Specification (SD-CSOC-00034) for the Consolidated Space Operations Center (CSOC), the facility construction contract documents, and the EMC/TEMPEST Control Plan. In the event an installation proposal or a manufacturer's recommended specifications are in conflict with the requirements of this document, the 850 CS Site Integration Office (hereafter referred to as the *Site Integration Office*) shall be the determining organization concerning the requirement for compliance. An installing agency proposing to deviate from the standards and requirements stated herein shall submit a waiver request in writing to the Site Integration Office. Large-scale deviations from this document must be addressed through a Memorandum of Agreement (MOA) with the appropriate installing agency or program office.

SUMMARY OF REVISIONS

***** Page 64 was changed to update the building numbers, no other changes have been made. This entire document has been significantly revised and updated. Updates reflect changes to Site Integration Office policy and procedures and industry standards.

Paragraph Page

Chapter l-INTRODUCTION

Section A-General.

1.1 Purpose 5
1.2 Scope 5

Section B-Installation Responsibilities.

13 General 5
1.3.1 Site Integration Office 5
1.3.2 Modification Requesting Agencies 6

Chapter 2-SITE INTEGRATION ENVIRONMENT

Section A-General.

2.1 Purpose 8

Section B-Utilidor.

2.2 General 8

Section C-Exterior Duct Banks and Underground Cables.

2.3 Cable Distribution 8

Section D-Physical Alterations to Facilities.

2 4 SAFB Facilities Alteration Policy 8
2.4.1 Raised-Floor Penetrations 8
2.4.2 Firewall Penetrations 13
2.4.3 Additional Requirements for Penetrating Firewalls 13
2.4.4 Shielded Area Penetration Criteria 14

Section E-Equipment Placement.

2 5 General 14
2.5.1 Movable Partitions and System Furniture Walls 14
2.5.2 Floor Loading 15
2.5.3 Equipment Installation Tolerances 15
2.5.4 Safety Requirements 16
2.5.5 Equipment Identification 16

Section F-Mechanical System Standards.

2 6 General 16
2.6.1 Interior Environmental Condition 16
2.6.2 Underfloor Air Distribution System 17
2.6.3 Underfloor Chilled-Water Distribution System 21
2.6.4 Identification 26
2.6.5 Fire Suppression, Detection, and Alarm Systems and Devices 26

Section G-Electrical Power Systems.

2 7 General 27
2.7.1 Technical Power System (TPS) Characteristics 27
2.7.2 Technical Support Power System (TSPS) Characteristics 27

2.7.4 Power Distribution Systems 28
2.7.5 TPS Receptacle Marking 30
2.7.6 TSPS Receptacle Marking 30
2.7.7 Sizing/Loading Policy for 60 Hz Systems (TPS and TSPS) 30
2.7.8 Verification of New Installations or Major Modification 34

Section H-Grounding Standards.
2.8 General 34
2.8.1 Facility Provisions 34
2.8.2 Grounding Design 34
2.8.3 Grounding Interconnections 36

Section I-Communications Cable Installations.
2.9 General 36
2.9.1 Fiber Optic and Metallic Cables 36
2.9.2 SAFB Cable Distribution System 36
2.9.3 RED/BLACK Separation 39
2.9.4 Authorized Cable Types 39
2.9.5 Waveguides and Rigid Coaxial Cable 39
2.9.6 General Installation Guidelines 40
2.9.7 Cable Marking 43

Section J-Cable Conveyance Devices.
2.10 General 46
2.10.1 RED and BLACK Conveyances 46
2.10.2 Cable Trays 46
2.10.3 Conduit 47

Section K-Miscellaneous Installation Requirements.
2.11 General 50
2.11.1 Safety 50
2.11.2 Testing 52
2.11.3 As-Built Information 52
2.11.4 Raised-Floor Tile Removal and Reinstallation 52
2.12 Work Site Cleanliness 53
2.13 Removal of Equipment/Facility Preparation 53

Figures **Page**

1-1 *SAFB Site Plan* 7
2-1 *Utilidor Plan* 10
2-2 *Raised-Floor Cutout and Trim* 11
2-3 *Typical Composite Sheet Installation* 12
2-4 *Reinforcement Marking* 17
2-5 *Typical Under-Rack Damper (Building 400)* 19
2-6 *Typical Ambient Floor Register* 20
2-7 *Typical Register* 21
2-8 *Typical CRA C Configuration* 24

2-9 *Typical Chilled- Water Connections* 25
2-10 *Technical Power Supply Label* 32
2-11 *Technical Support Power Supply Label* 32
2-12 *Intramodule Cable Routing for Administrative Communications (Bldg 400).* 38
2-13 *Acceptable Cable Rating Designators for SAFB* 42
2-14 *Typical Cable Identification Tag Requirements* 45
2-15 *Unclassified Cable Tray Label* 49
2-16 *Fiber Optic Cable Tray Label (Black on Yellow)* 49
2-17 *Typical Underfloor Section* 54
A3-1 *Typical Rack Elevation (Front)* 69

Attachments **Page**

1 Glossary of Applicable and Reference Documents, Acronyms and Definitions 55
2 Reference Numbering System 62
3 Communications Circuit Design and Installation Requirements 65

Chapter 1

INTRODUCTION

Section A-General.

1.1. Purpose. This document identifies and establishes the standards and requirements necessary for the uniform installation of technical equipment and facility interfaces to achieve effective site integration and configuration management of those areas and facilities under configuration management.

1.1.1. The first chapter of the document outlines the roles and responsibilities of integration management participants. The second chapter describes the site integration environment and standards that apply uniformly to all installations in facilities and areas under configuration management.

1.2. **Scope.** A wide spectrum of standards and directives apply to agencies that perform installations on SAFB. In addition to those standards, the SAFB Facility Installation Standard (FIS) establishes installation standards and requirements that are specific to SAFB. In the event of conflict between the FIS and other standards, the document with the strictest requirement, as determined by the Site Integration Office, shall prevail.

1.2.1. The FIS applies to contractors and Air Force organizations that design, produce, install, test, or modify specific areas of the technical facilities, equipment, and systems that constitute the SAFB Configuration Baseline. The SAFB Configuration Baseline incorporates all facilities and areas under configuration management on SAFB (see Attachment 2, Section D). Figure l-l depicts the location of the buildings on SAFB.

Section B-Installation Responsibilities.

1.3. General. Various agencies have certain responsibilities for technical equipment installations. The responsibilities described below are pertinent to this document:

1.3.1. Site Integration Office. Responsibilities of the Site Integration Office include: Coordinating facility modifications necessary for equipment installations.

1.3.1.1. Reviewing, evaluating and approving installation design documentation.

1.3.1.2. Providing equipment reference designation and cable numbers.

1.3.1.3. Coordinating interface between diverse operational systems.

1.3.1.4. Approving waivers of the requirements described in this document. (Government Site Integration Office personnel.)

1.3.1.5. Reviewing and approving revisions to the SAFB FIS. (Government Site Integration Office Personnel.)

1.3.1.6. Coordinating and advising on new designs or hardware design modifications that impact SAFB facilities.

1.3.1.7. Supporting subsystem and system-level testing that may result in impacts to SAFB facilities.

1.3.2. Modification Requesting Agencies. The requesting agency shall furnish certain required information concerning the project prior to installation or modification:

1.3.2.1. The completed 50 SW Form 19 package prior to actual installation. (Reference 50 SWI 33-l 13 and 50 SWH 33-l 16 for information on preparing a 50 SW Form 19.)

1.3.2.2. Requests for waiver or deviation from the requirements described in this document shall be submitted to the Site Integration Office.

1.3.2.3. In accordance with AFI 33-203, it is the requester's responsibility to ensure their facility meets established TEMPEST criteria. Users shall coordinate planned installations with the SAFB TEMPEST manager, 50CS/SCBI.

1.3.2.4. Requesting agencies shall coordinate all structural and physical building requirements with 50th CES via AF Form 332.

1.3.2.5. The requesting agency is responsible for coordinating with the affected offices or organizations prior to submission of the Form 19 to ensure the installation or modification does not hinder the day to day operation or mission.

Figure l-l. SAFB Site Plan

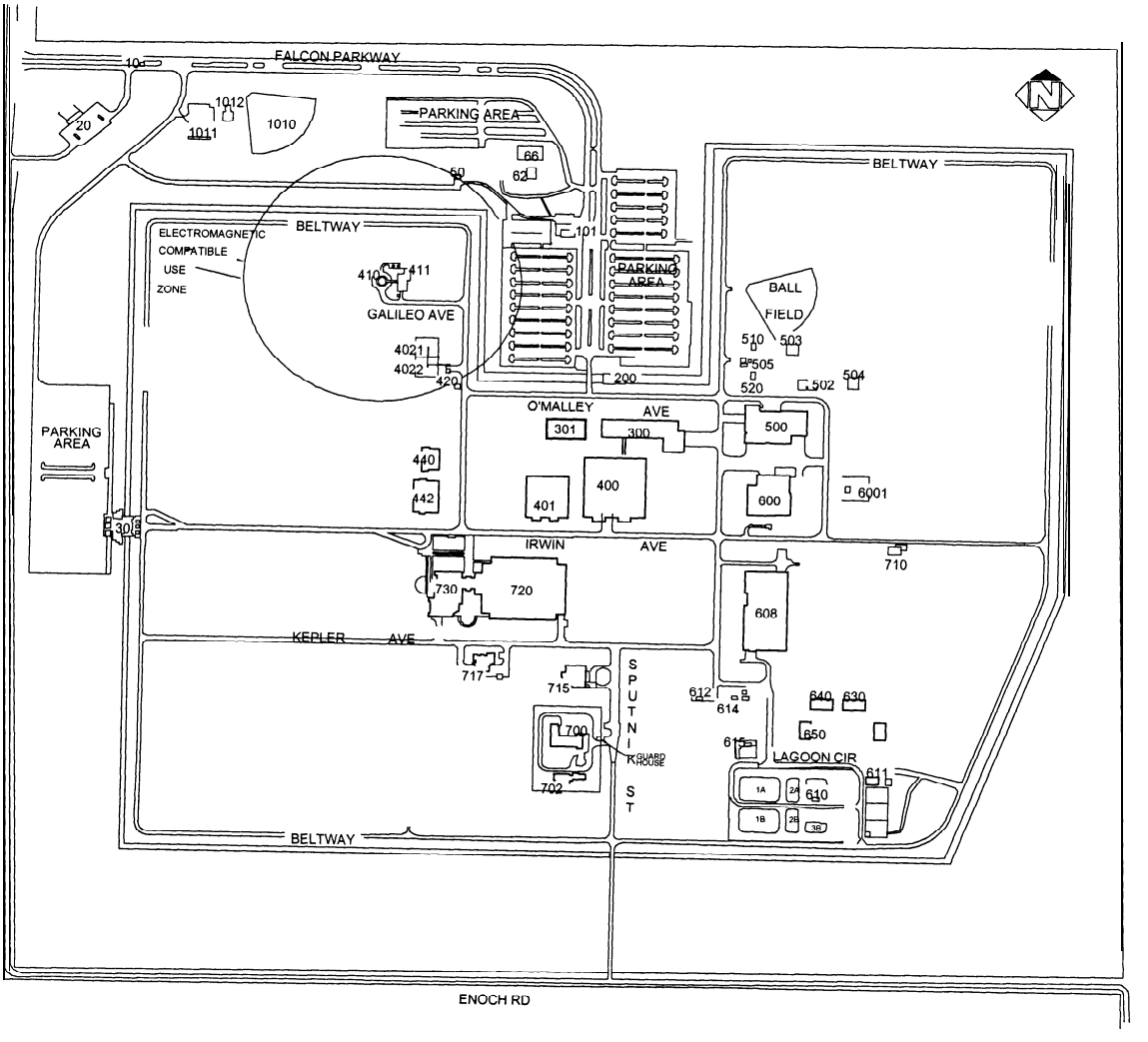

SCHRIEVER AIR FORCE BASE

Chapter 2

SITE INTEGRATION ENVIRONMENT

Section A-General.

2.1. Purpose. This chapter describes the general site integration environment and standards that are uniformly applied to installations throughout SAFB.

Section B-Utilidor.

2.2. General. The utilidor, illustrated in Figure 2-1, is used primarily for installation and distribution of communications cables and utilities between Engineering & Administration (E&A) (building 300), Operations (building 400), Site Support (building 500), Central Plant (building 600), and Joint National Test Facility (JNTF) (buildings 720 and 730). Conduit and cable trays have been provided in the utilidor to support installation of communications cables and utility lines.

Section C-Exterior Duct Banks and Underground Cables.

2.3. Cable Distribution. Distribution of communications and utility lines between buildings and facilities not connected by the utilidor may be routed, at Cable Management's discretion, through the utilidor cable trays and conduits to the exterior manhole or handhole duct bank system. Cables extending from the SAFB duct bank shall be installed per BCE and Site Integration Office specifications.

Section D-Physical Alterations to Facilities,

2.4. SAFB Facilities Alteration Policy.

2.4.1. Raised-Floor Penetrations. Raised-floors are provided in technical equipment areas to "facilitate cable routing and cooling air distribution.

2.4.1.1. Penetration Criteria. Openings in the raised-floor shall be made only after coordination and approval of the Site Integration Office.

2.4.1.2. Penetration Requirement. Raised-floor openings shall be reinforced per manufacturer's recommendations to preserve floor-loading characteristics and to prevent adverse impacts to the Air Conditioning (AC) system. Raised-floor cutouts shall be lined with a material suitable to prevent exposed sharp edges and provide protection to cable or other hardware passing through the opening. (Rubber-coated flex conduit may be used without this lining, as the conduit will provide adequate protection.) They shall be treated with an approved material to prevent dusting of the exposed concrete core. All openings shall be sealed with a UL-listed material, applied per manufacturer's specifications, to prevent degradation of the AC system (i.e., intumescent

composite sheet with putty, putty alone, fire sealant expanding foam, or other Air Force approved material). The use of a properly applied UL-sealant will ensure AC pressure is not adversely impacted. Neoprene (synthetic rubber) is not an acceptable material. Figure 2-2 depicts a typical treatment of edges on a raised-floor opening. Figure 2-3 depicts the installation of a typical composite sheet material.

2.4.1.3. Reconstruction. In the event that maintenance or work is performed that requires the raised-floor system to be disrupted, it is the responsibility of the performing agency to return the raised-floor system back to its original configuration immediately after the work is complete.

Figure 2-l. Utilidor Plan

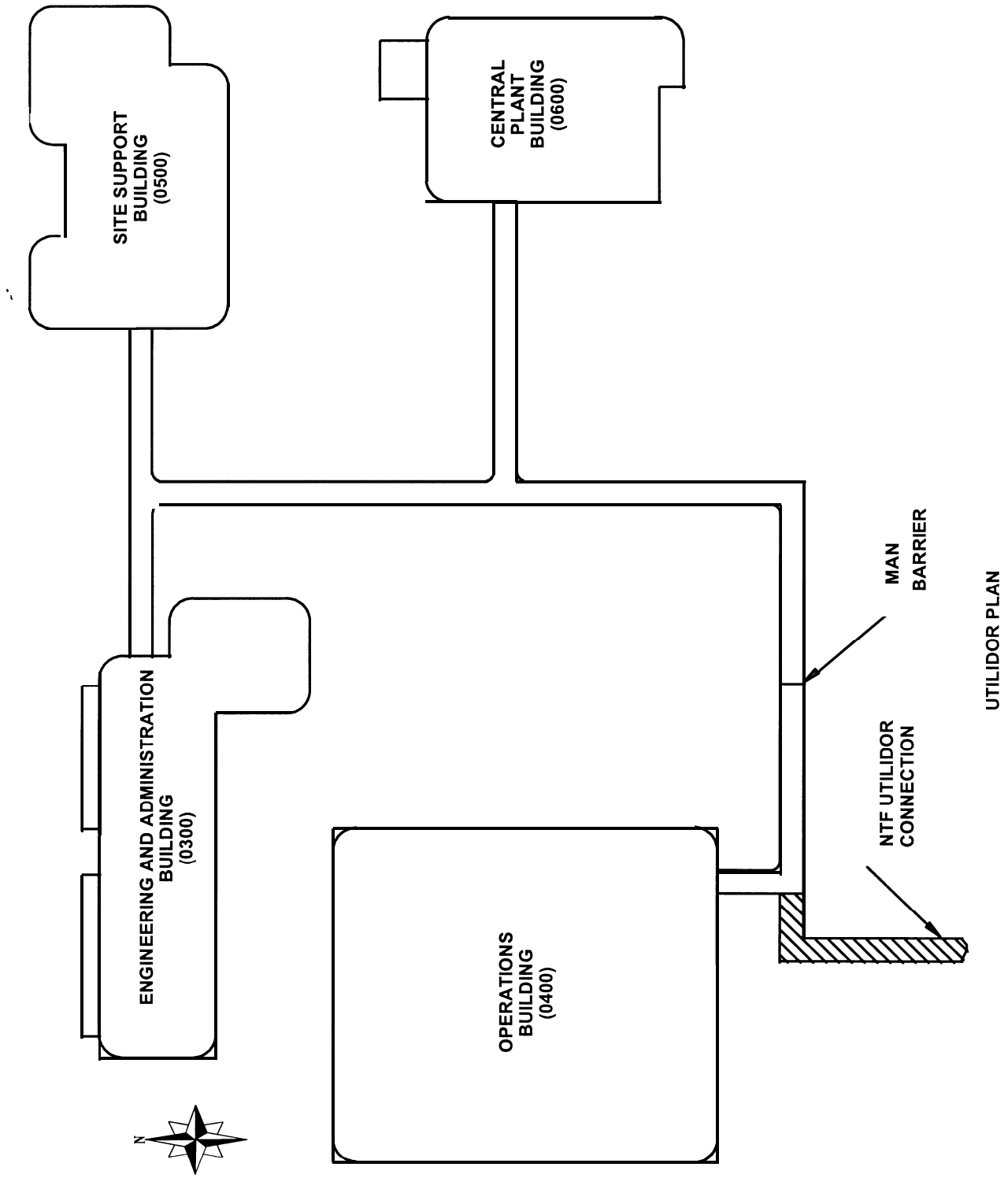

Figure 2-2. Raised-Floor Cutout and Trim.

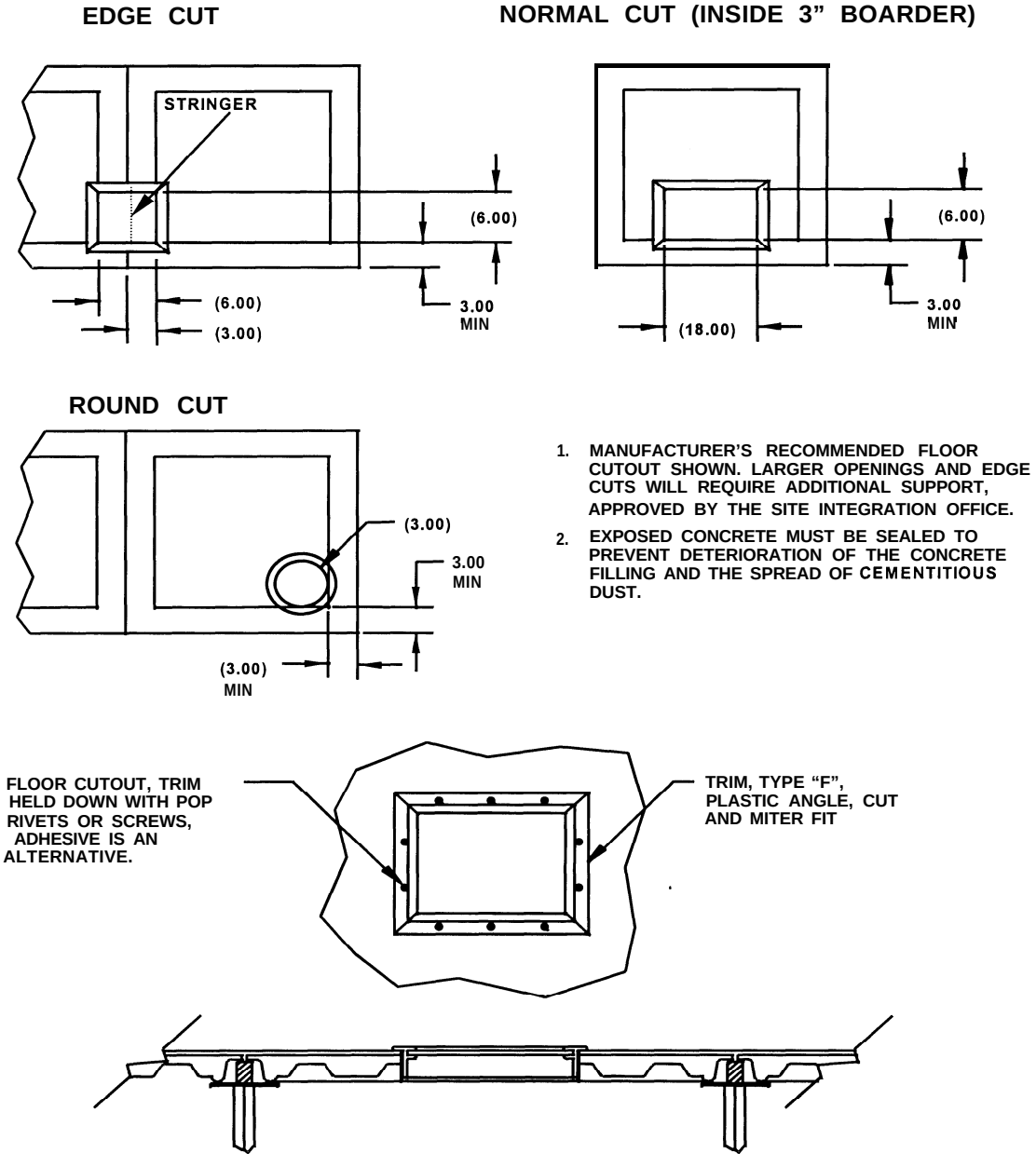

Figure 2-3. Typical Composite Sheet Installation.

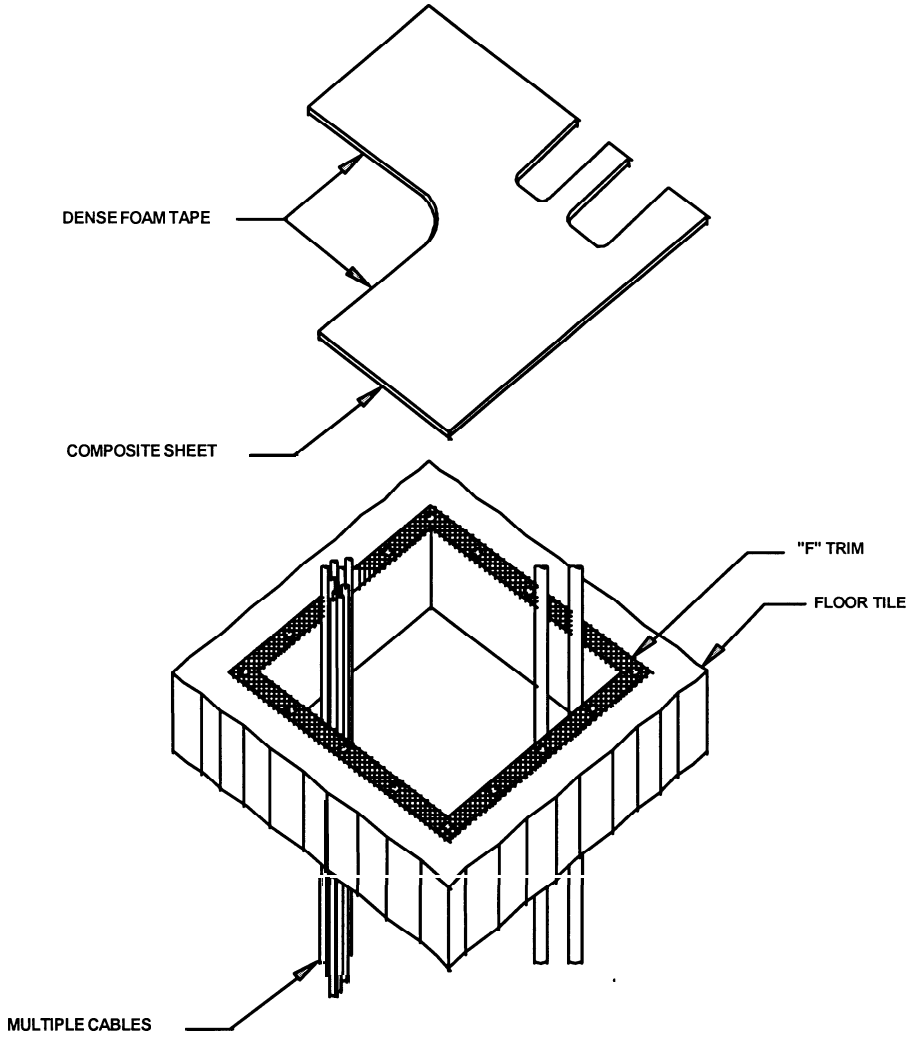

NOTE:

1. ANY RUBBER INSERTS THAT EXIST ARE TO BE REMOVED FROM THE CABLE OPENINGS.
2. IF POSSIBLE, ARRANGE CABLES TOGETHER. IF CABLES CANNOT BE ARRANGED TOGETHER, THE CABLES ARE TO BE LEFT IN PLACE. PRE-CUT COMPOSITE SHEET PRIOR TO INSTALLING AS SHOWN IN THE ABOVE DRAWING. SHEET SHOULD BE CUT TO OVERLAP THE CABLE OPENING BY TWO (2) INCHES, IF POSSIBLE. THE CABLE HOLES IN THE SHEET SHOULD BE CUT A MINIMUM OF ONE (1) INCH LARGER THAN NECESSARY TO ALLOW FOR FUTURE CABLE EXPANSION.
3. INSTALL "F" TRIM AROUND THE PERIMETER OF THE CABLE OPENING AS SHOWN ABOVE. TRIM IS HELD DOWN WITH POP RIVETS OR SCREWS. ADHESIVE IS AN ALTERNATIVE.
4. PLACE COMPOSITE SHEET FOIL SIDE DOWN INSIDE THE "F" TRIM SLOT WITH A BEAD OF MOLDABLE PUTTY APPLIED AROUND THE EDGES. TO SEAL EMI OR RFI RACKS USE A SILICONE ADHESIVE TO SECURE COMPOSITE SHEET TO THE BOTTOM OF THE RACK.
5. APPLY THE DENSE FOAM TAPE AROUND ALL THE ROUGH CUT-OUT EDGES TO PROTECT THE CABLE FROM BEING CUT.
6. AFTER THE COMPOSITE SHEET IS IN PLACE FILL ALL THE REMAINING OPENINGS and or GAPS WITH MOLDABLE PUTTY TO FIT SNUGLY AROUND THE CABLES AND COMPLETE THE SEAL.

2.4.2. Firewall Penetrations. Installing agencies are responsible for ensuring that firewall integrity is maintained when penetrating for communications or power cables. There are three approved methods to penetrate unshielded firewalls: Multi-Cable Transit devices, Compression Fittings, and Conduit Penetrations. These methods are described below.

2.4.2.1. Multi-Cable Transit (MCT). The Nelson Electric Supply MCT (a.k.a. Nelson Window) is an example of MCT penetration device permitted at SAFB. Other MCTs that meet the rating of the penetrated firewall may be used. MCTs are normally rated for a two-hour firewall. At SAFB, the primary use of MCT is to provide cable penetration between the vertical and horizontal cable chases. Additionally, MCTs may be used when penetrating through a gypsum firewall where numerous cable changes are anticipated.

2.4.2.2. Compression Fitting (CF). The Crouse-Hinds Sealing Gasket Assembly and the Service Entrance Cable Connector are examples of CFs permitted at SAFB. Other CFs that have a one-hour fire rating may be used. CFs are used for penetrating metal windows located between the horizontal cable chases and the underfloor areas of the modules/rooms. Flame Seal II Putty, manufactured by Nelson Electric Supply, or equivalent, shall be used at the fitting if a complete seal cannot be accomplished. The manufacturer's instructions shall be followed when using CFs.

2.4.2.3. Conduit Penetration (CP). Only rigid conduit or electrical metallic tubing (EMT), as specified in this document, shall be used. CPs are used for penetrations through gypsum firewall. The procedures for making and sealing these penetrations are:

2.4.2.3.1. Cut a hole in the firewall approximately one-inch larger than the diameter of the conduit.

2.4.2.3.2. Pack fiberglass insulation into the gap around the conduit.

2.4.2.3.3. Use tape to hold the fiberglass insulation in place. Putty or caulk over the tape to complete the seal.

2.4.2.3.4. Use Flame Seal II Putty, or equivalent, to completely seal around the cables in one end of the rigid conduit or electrical metallic tubing.

Note: For underfloor firewall penetrations, Flame Seal II Putty may be used as a substitute for the fiberglass, tape, and putty/caulk as described above.

2.4.3. Additional Requirements For Penetrating Firewalls. Although shielded modules were provided in building 400 during CSOC activation, 50 SW operations located on SAFB do not require TEMPEST-shielded modules, maintenance of the existing shields, shield doors, or shield effectiveness testing. Individual programs must meet TEMPEST requirements in

accordance with Air Force Cryptologic Support Center (AFCSC) guidance. The following sections describe penetrations through shielded modules.

2.4.3.1. Unused Penetrations. Unused penetrations made by means of a waveguide, bulkhead connector or other device shall be capped or covered to prevent loss of underfloor cooling air.

2.4.4. Shielded Area Penetration Criteria. Cables that penetrate a shielded area shall do so in a way that shall minimally degrade the physical integrity of the shield. Every penetration shall have its design submitted to the Site Integration Office for review and approval prior to installation. Installations shall comply with the National Electric Code (NEC) (NFPA 70, Article 300-21), AFSSM 7011 and NFPA 75.

Section E-Equipment Placement.

2.5. General. Guidelines for equipment/systems furniture placement and requirements are outlined in this section.

2.5.1. Movable Partitions and System Furniture Walls. Technical/mission areas and modules are generally subdivided by modular partition walls and system furniture walls. Re-location of movable partitions and system furniture walls shall not be made until a plan for reconfiguration has been submitted to and coordinated with the Site Integration Office, BCE architect and 50 SW/SE. Drawings for the system furniture shall include panel sizes, powered panels, non-powered panels and base feed locations. Drawings must conform to the requirements specified in this chapter.

2.5.1.1. Equipment/System Furniture Layout. The floor layout and configuration for equipment areas and system furniture comprising the SAFB Configuration Baseline shall be managed by the Site Integration Office. The agency having Modification Control Board (MCB) authority for an area or module approves the allocation of floorspace within the area (i.e., 1 SOPS for SOC-3 1, 50 CS for the Mission Communications Segment, 50 CS for the Air Force Network Control Center (AFNCC)).

2.5.1.1.1. Each requesting agency shall furnish the Site Integration Office with drawings of "the proposed placement of equipment/system furniture to be installed at SAFB. Equipment/system furniture installation shall not proceed until the equipment/system furniture layout has been coordinated with the Site Integration Office. Drawings shall conform to the requirements described below.

Note: Reference 2.6.1.2 and 2.6.5.3.2 regarding devices affected by system furniture alterations. Electrical requirements for systems furniture are covered in paragraph 2.7.7.4.

2.5.1.2. Coordinate System. Drawings shall illustrate the location of equipment/system furniture within a Cartesian coordinate system that is overlaid on an outline of the area where

the installation is to be made. The grid location D,O/5,3 designates column letter D, floor grid letter 0 and column number 5, floor grid number 3. Equipment locations shall be referenced from the most northeast comer of the equipment footprint.

2.5.1.2.1. Grid lines of the coordinate system shall be spaced at two-foot intervals.

2.5.1.2.2. For installations in raised-floor areas, the grid lines shall coincide with the outlines of the raised-floor panels.

2.5.1.2.3. An origin and enumerated axis shall be marked for each coordinate system.

2.5.1.2.4. All coordinate systems shall be clearly referenced to an existing building column line, as defined by the Technical Area Integration Drawings (TAIDs), or the Holmes and Narver Drawings for areas that have no TAID.

2.5.1.3. Raised-Floor Openings. Drawings shall show the location and size of openings to be made in a raised floor.

2.5.1.4. Scale. A minimum scale of l/8inch equals one foot is recommended for layout drawings. Where necessary, greater detail or other DoD drawing standards may be used.

2.5.1.5. Countermeasure Level. Each module or room at SAFB that processes classified information has an established countermeasure level. The counter-measure level, assigned by the base TEMPEST office, may restrict the placement of equipment, telephones and cables. Equipment placement must meet RED/BLACK separation requirements of AFSSM 7011.

2.5.2. Floor Loading. Equipment shall not impose floor loads that exceed the allowable loads for raised and non-raised floors in the baseline areas.

2.5.2.1. Raised-Floor Areas. The maximum floor loading on tiles in raised-floor areas shall not exceed 250-pounds per square foot (psf) or 1,000-pound point loading. Concrete floor-slabs that support raised floors may be loaded to a maximum of 200-pounds per square inch (psi). Where individual equipment loads exceed 25O-psf, or when several pieces of heavy equipment are located in close proximity, additional underfloor bracing shall be added. Four-, five-, and six-drawer safes shall have floor reinforcement. See 2.5.4.2 for reinforcement Labeling requirements. Replacement tile should match existing tile and pedestal supports.

2.5.2.2. Non Raised-Floor Areas. The maximum floor loading in non raised-floor areas shall not exceed 60-psf.

2.5.3. Equipment Installation Tolerances. Equipment shall be installed plumb to within 1/8-inch tolerance for single enclosures and to within 1/4-inch tolerance, from end-to-end, for

multiple-enclosure groupings. Freestanding enclosures mounted adjacent to each other shall have the front faces flush to within 1/8 inch. Reference *AF* TO 3 1- 1 O-29, *Erection and Assembly of CEM Equipment.*

2.5.4. Safety Requirements.

2.5.4.1. Equipment Layout. To ensure a safe working environment, communications cables, power wiring, and ancillary cables that penetrate raised floors shall do so entirely within the footprint of the respective equipment rack.

2.5.4.2. Reinforcement Marking. Reinforcement Marking shall be as shown in Figure 2-4. The location of the reinforced area under the safe shall be clearly marked and visible on the raised floor/carpet with black and yellow tape. Safes requiring floor reinforcement shall be given equipment identification numbers per paragraph 2.5.5.

2.5.4.3. Unistrut End Cap Covers. Underfloor unistruts shall have end cap covers installed to protect against sharp edges.

2.5.5. Equipment Identification. Equipment that has a communications cable connection, is powered by UPS power, has a dedicated power circuit, or requires floor supports, shall be marked with permanent identification tags when installed. These tags shall be printed with the facility code, module number, room number, and station number. See Attachment 2, Section B.

Section F-Mechanical System Standards.

2.6. General. This section provides environmental standards and requirements.

2.6.1. Interior Environmental Condition. Data-processing equipment areas are provided with a controlled internal environment to meet equipment operating specifications and ensure reliable equipment operation. The module areas in building 400, and buildings 700 and 715 use pressurized, raised-floor plenum systems to deliver cooling air for specific data-processing equipment. Technical equipment in other areas normally receives cooling air from overhead systems. The environmental system is controlled by BCE. Modifications to the following guidance require BCE approval.

Figure 2-4. Reinforcement Marking.

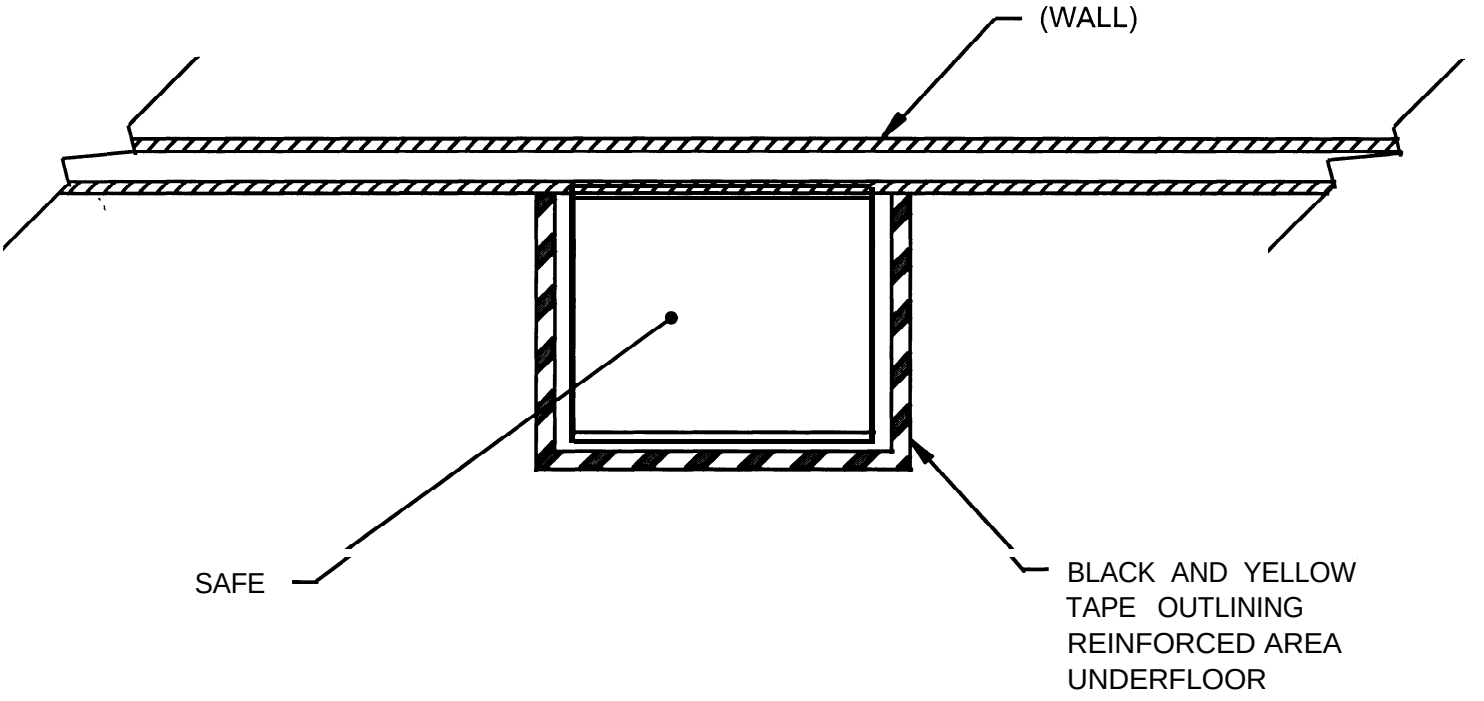

2.6.1.1. Environmental Parameters. Air conditioning systems in data-processing equipment areas are provided to satisfy equipment cooling requirements rather than creature comfort and shall maintain the environmental parameters specified in the respective FIS sections.

2.6.1.2. Requirements Affecting Mechanical Systems. Heat load calculations must be performed when changing power panel schedules or when planning the relocation of computer equipment. These calculations shall show whether changes to mechanical systems are required. Floor registers may not be abandoned in place. HVAC requirements must be addressed in the 50 SW Form 19 package if any of the following situations apply:

2.6.1.2.1. Any change to power panel schedules. (This change may affect floor register layout .)

2.6.1.2.2. Any change to wall configuration. (This change may affect overhead cooling and heating, fire protection and fire detection.)

2.6.2. Underfloor Air Distribution System.

2.6.2.1. General Description. Conditioned air is supplied by a combination of variable air-volume overhead and underfloor air-handling units. Computer room air conditioning units are used only where the capacity of the underfloor air-handling unit is not adequate. Airflow from an underfloor plenum varies in response to a thermostat; air-volume controlled,

pneumatic-operated dampers on the floor air registers; or through the use of restricting plates, as described in 2.6.2.4.

Note: Underfloor air-handling equipment in building 400 is redundant and must be used for data-processing equipment cooling. Overhead air conditioning is not redundant.

2.6.2.2. Raised Floors. The modules in building 400 and the operations and equipment areas in buildings 700 and 7 15 are provided with raised floors for distribution of cooling air to the equipment.

2.6.2.3. Direct Air Intake. Direct underfloor or under-rack cooling shall be used only if ambient cooling is shown to be impractical to satisfy a manufacturer's specifications for cooling the equipment or rack with internally powered fans. Penetrations for such installations shall conform to the requirements of 2.4.1 of this document.

2.6.2.4. Under-Rack Floor Dampers. Under-rack pneumatic-controlled dampers (see Figure 2-5) may be used if direct cooling is required. The control dampers shall be connected to the Emergency Power Off (EPO) switch. The dampers shall "fail open" upon loss of air pressure. Set points shall be determined according to the maximum calculated design load encountered. The minimum flow to establish positive air flow through a computer rack is 40-cubic feet per minute (cfm). Due to rack design variations, this flow rate does not guarantee that flow stagnation shall not happen within the rack.

2.6.2.5. Floor Register Air Intake for Data Processing Equipment. Floor registers transfer air from the underfloor air plenum to the equipment location. Floor registers shall be directional at 30" deflection.

2.6.2.5.1. Floor Registers. Floor registers (see Figures 2-6 and 2-7) shall be 6-inches by 18-inches, mounted only one per floor tile, have a room thermostat controlled damper, be directional at 30° deflection, and be flush mounted. A minimum of 240-cfm can be expected for each full-open register. All new floor registers shall be heel proof.

2.6.2.5.2. Pneumatic Tubing. Pneumatic tubing connected to the floor registers shall be 3/8-inch outside diameter (OD), fire resistant and UL-rated for air plenum application. Tubing shall be run on the concrete underfloor deck, attached at each floor tile pedestal via tie wraps every 10 feet. A maximum of six floor registers may be connected to any one pneumatic loop.

2.6.2.5.3. Computer Room Air Conditioners (CRACs). In building 400, a maximum of 80 registers per module can be installed without installing CRACs. If more than 80 registers are to be installed, a recalculation of the entire module heat load shall be made to verify the register configuration. Figure 2-8 illustrates a typical CRAC configuration.

2.6.2.5.3.1. A means to provide additional underfloor cooling air must be used if more than 80 floor registers are installed. Customarily, down-flow CRACs are provided. CRAC installation shall include smoke dampers and underfloor turning vanes. New CRACs shall have floor supports installed at the time of installation. CRACs shall be connected to the manual HVAC power off switch for each module in building 400, which is also identified as the Emergency Refrigeration Off (ERO) or Air Power Off (APO) switch. Hydraulic calculations of the building chilled-water system shall be provided to determine CRAC impact.

Figure 2-5. Typical Under-Rack Damper (Building 400).

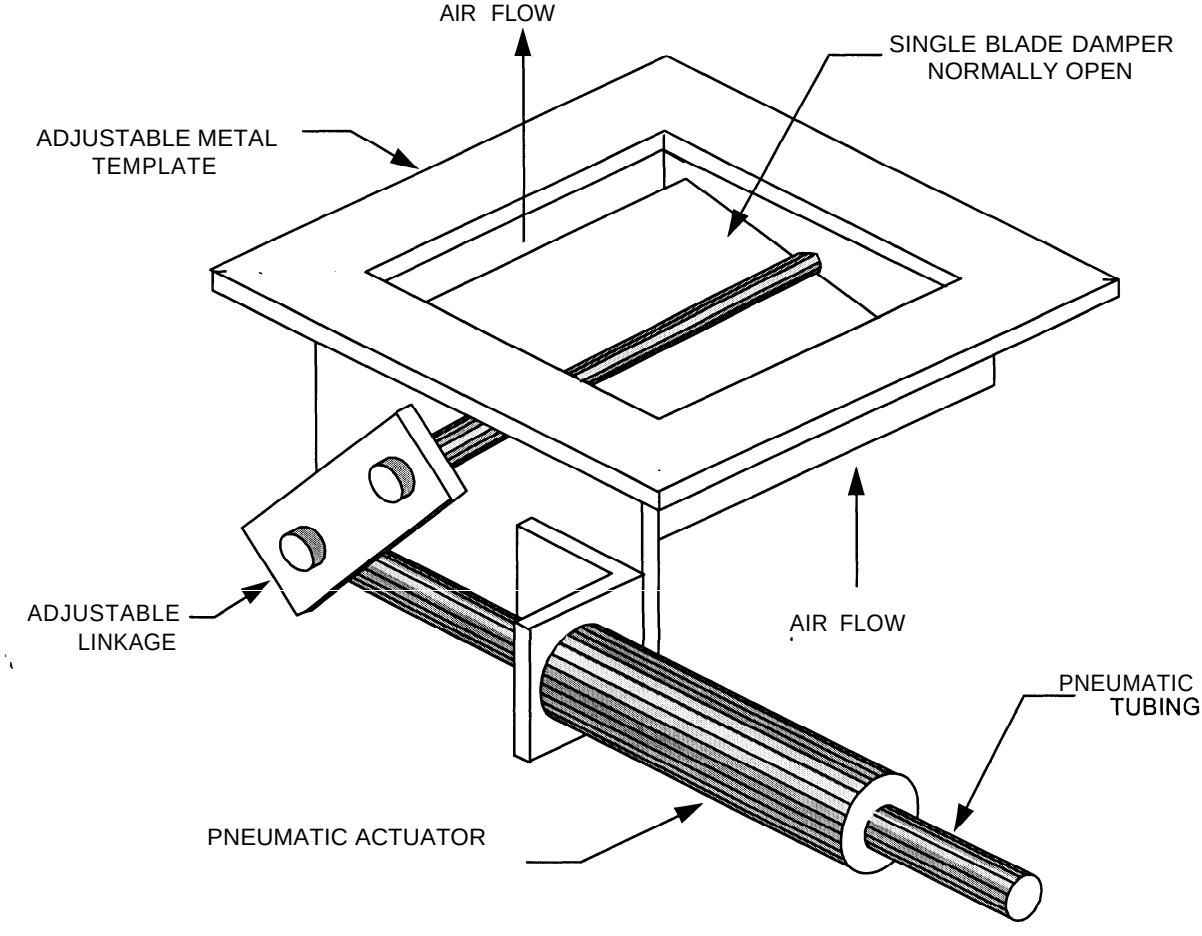

Figure 2-6. Typical Ambient Floor Register.

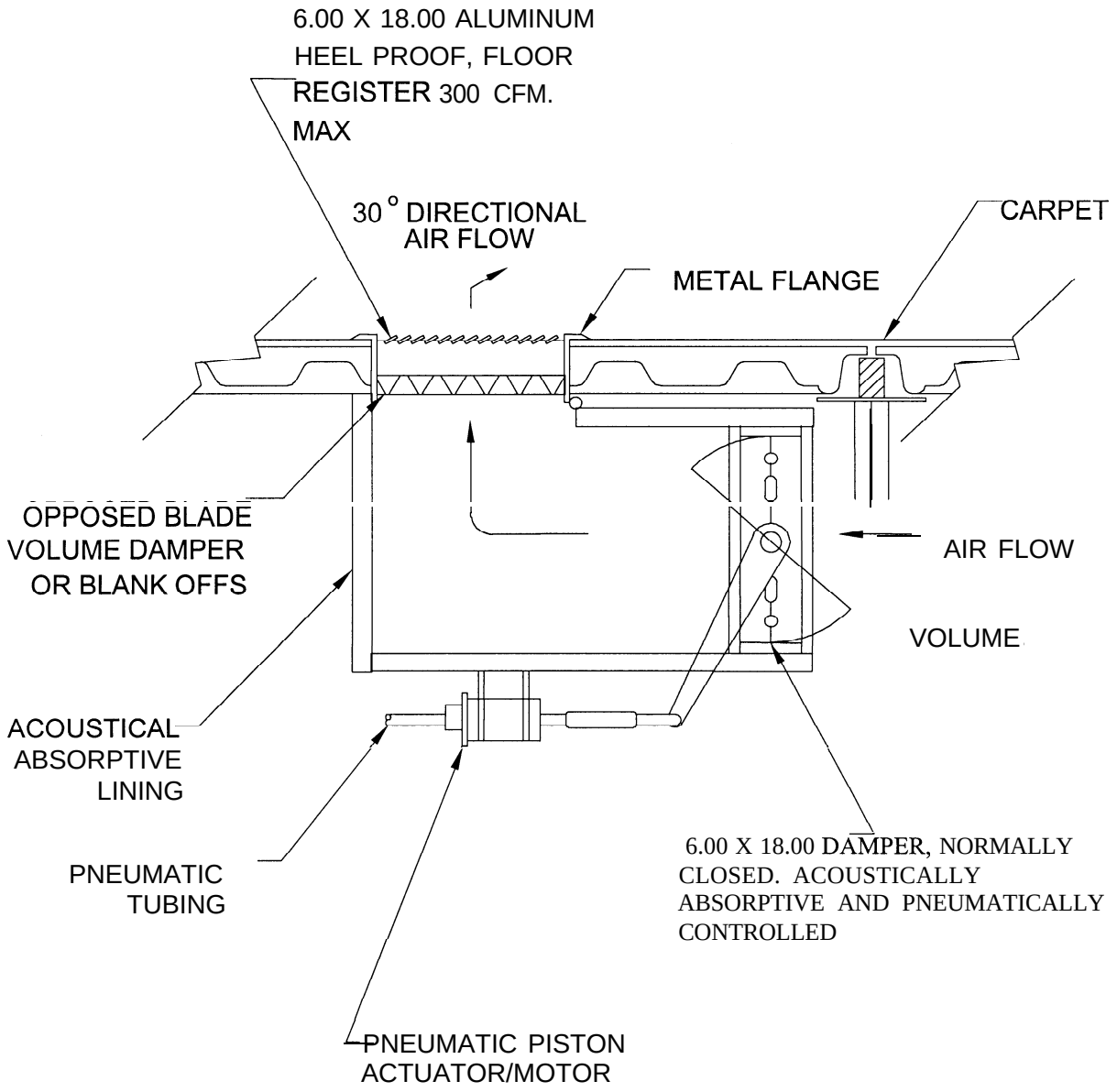

Figure 2-7. Typical Register.

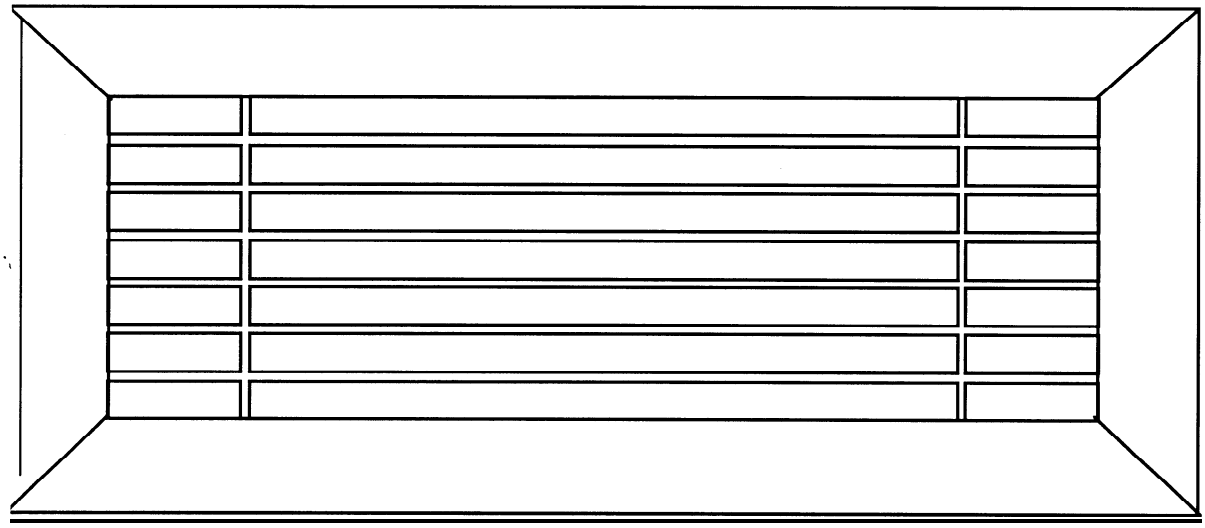

TYPICAL J & J REGISTER 2530PP
18 X 6 TYPE R & B FR 10

2.6.2.5.4. Coordination During Equipment Layout Planning. Coordination is necessary during equipment layout planning in order to ensure that the floor register layout is suitable, that there is a sufficient number of registers to satisfy equipment cooling requirements, and that the registers are designed to provide proper air flow. Details for the relocation of any registers shall be furnished to the Site Integration Office and BCE. Any relocation of air ‘registers must be coordinated with the Site Integration Office via 50 SW Form 19 (or Field Change) documentation and approved by BCE.

2.6.2.5.5. Additional Registers. New or additional floor registers shall be procured in accordance with procurement guidance furnished by 50 CONS.

2.6.3. Underfloor Chilled-Water Distribution System.

2.6.3.1. General Description. Technical equipment that requires direct chilled-water connections shall be tapped into a special piping loop within the floor plenum provided for this purpose. The loop consists of chilled-water supply and return piping and is independent of other chilled-water loops that may be installed to supply the CRACs. Not all modules have this utility piping installed. Hydraulic calculations shall be provided to demonstrate the impact on the facility for all installations.

2.6.3.2. Flexible Piping. Installation of flexible piping and its coupling connections to the loop shall be in strict compliance with the equipment manufacturer's recommendations and meet the requirements in 2.6.3.5.

2.6.3.3. Rigid Piping. Extensions of the facility piping to make connections between technical equipment and the chilled-water system shall be as illustrated in Figure 2-9. Piping, fabrication, assembly, brazing, soldering and installation shall conform to ANSI B3 1.1 and the requirements described below.

2.6.3.4. Material.

2.6.3.4.1. Pipes shall be copper tubing Type L, conforming to ASTM B88-81 (latest) with wrought copper and bronze solder joint end connections.

2.6.3.4.2. Solder joint fittings shall be either cast bronze conforming to ANSI B 16.18 or wrought copper conforming to ANSI B16.22.

2.6.3.4.3. Unions shall be solder joint type conforming to Fed. Spec. WW-U-516.

2.6.3.4.4. Solder metal shall be tin-antimony alloy for pressures up to 15-psi, conforming to ASTM B32-76 (latest), Grade 95TA.

2.6.3.5. Installation.

2.6.3.5.1. Material and equipment shall be installed to form complete, convenient and economical systems. Connection to the facility-provided piping shall be with a tee, wye, or manifold CF. One leg of the CF shall not be connected to any additional piping. This allows equipment in future installations to be tapped into the chilled-water loop without disrupting ongoing operations. The extra branch shall be provided with a gate valve and blind flange or cap.

Note: The rated capacity of the chilled-water system shall not exceed 80 percent of the calculated available capacity without BCE approval. Hydraulic calculations shall be provided with the 50 SW Form 19.

2.6.3.5.2. Piping shall be supported.

2.6.3.5.3. Piping installations shall conform to the Uniform Mechanical Code and ANSI B31.1.

2.6.3.5.4. Unless otherwise indicated, horizontal lines of supply and return piping shall be run in parallel. Trapping of lines is not permitted.

2.6.3.6. Field Tests and Inspection.

2.6.3.6.1. The installing agency shall provide equipment and apparatus required for performing inspections and tests. If the installation fails, defects shall be corrected and the respective inspections and tests shall be repeated. Testing and inspection shall be observed by BCE.

2.6.3.6.2. Pressure test gauges shall be currently certified as being accurate to within one percent of their full scale. Gauges with a maximum scale between 1.5 and 2 times the test pressure shall be used.

2.6.3.6.3. Prefabricated piping sections and fittings shall be factory tested to ensure compliance with this specification. Factory test reports and specification compliance certificates shall be provided to BCE.

2.6.3.6.4. Prior to initial operation, piping systems shall be inspected for conformance to drawings, this document, and ANSI B3 1.1.

Figure 2-8. Typical CRAC Configuration.

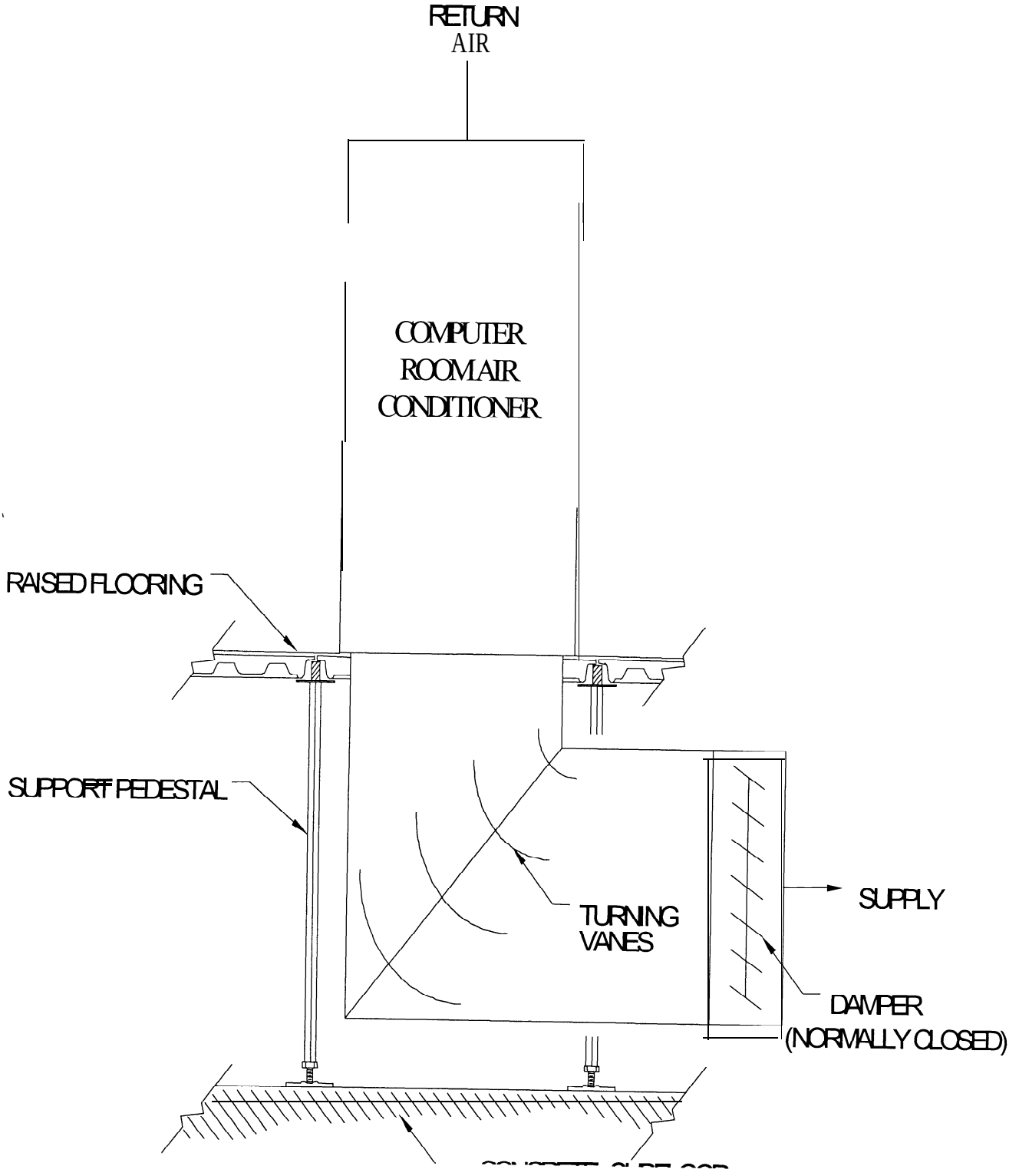

Figure 2-9. Typical Chilled-Water Connections.

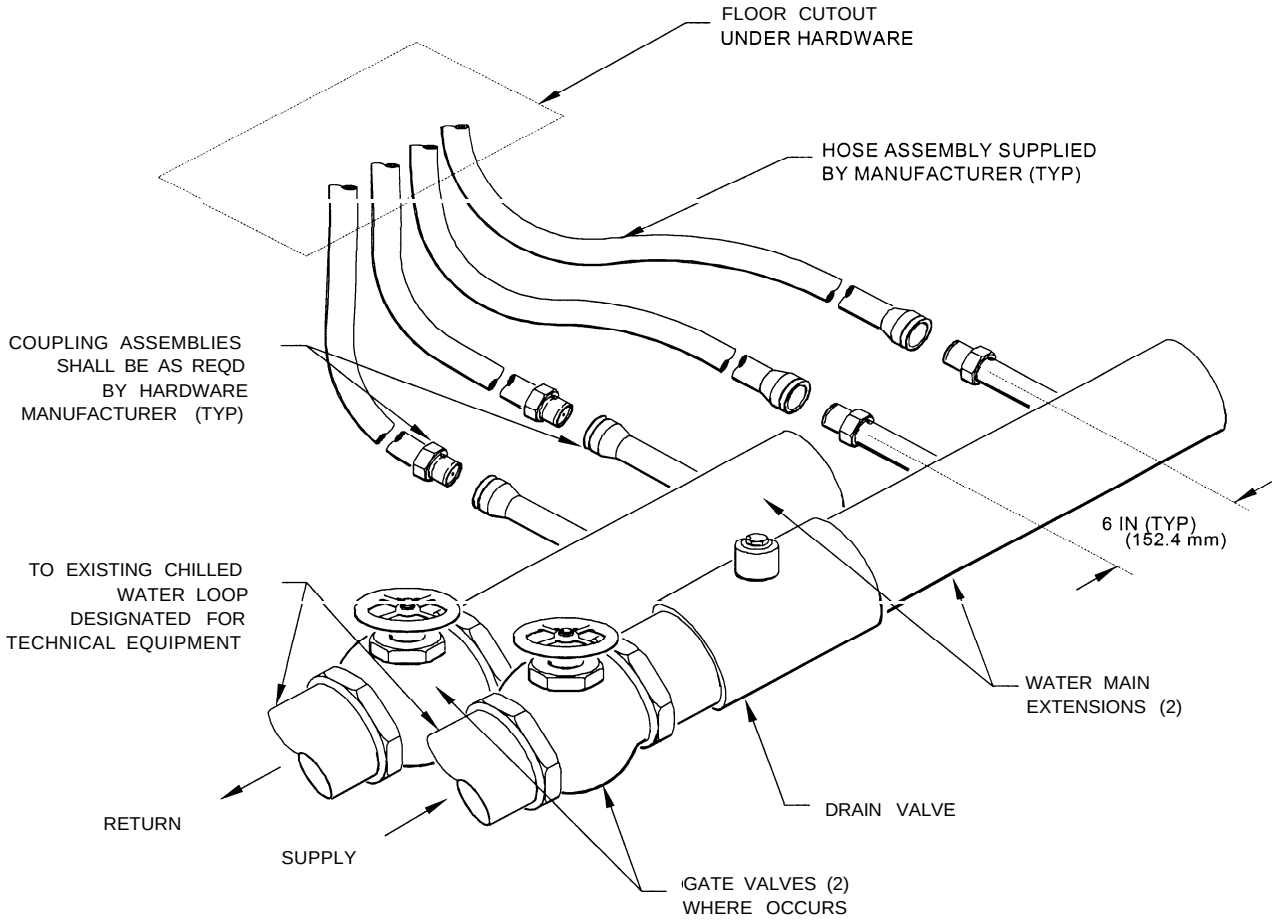

2.6.3.6.5. The piping system shall be hydrostatically tested. The tests shall be conducted in accordance with ANSI B3 1.1 and as follows:

2.6.3.6.5.1. Test the piping system after the lines have been cleaned.

2.6.3.6.5.2. Perform the test at a pressure 1.5 times the system operating pressure with water not exceeding 125-psig.

2.6.3.6.5.3. Install a calibrated test gauge in the system to observe any loss of pressure.

2.6.3.6.5.4. Close off the system, maintain the required test pressure for a minimum of one hour, and inspect joints and connections for leakage.

2.6.3.6.5.5. Piping that fails to meet the test shall be repaired and re-tested.

2.6.3.6.6. Equipment and material certified by the manufacturer as having been successfully tested in accordance with the cited specifications shall not require re-testing before installation. Equipment and material not tested at the place of manufacture shall be tested before or after installation to determine compliance with this document and the manufacturer's performance criteria.

2.6.4. Identification. All piping shall be identified in accordance with MIL-STD-101B.

2.6.5. Fire Suppression, Detection and Alarm Systems and Devices.

2.6.5.1. General Description. The HALON fire protection systems originally installed on SAFB have been made inoperable. In general, fire suppression is provided by wet-pipe sprinkler systems or by the use of air-supervised, dry, pre-action sprinkler systems. Additional fire suppression capability is provided by Class 2 standpipe hose stations. These hose stations are to be utilized by Fire Department personnel only.

2.6.5.2. Sprinkler System Alterations. Alterations or extensions to existing sprinkler systems in any area shall be in strict accordance with NFPA 13, *Standardfor the Installation of Sprinkler Systems.* Sprinkler heads proposed for installation or relocation shall be equivalent in model, type, rating and style to those in the surrounding area. Suspension of new cross-mains, branch lines or sprinkler heads shall also be in accordance with NFPA 13.

2.6.5.3. Detection/Alarm System.

2.6.5.3.1 Alterations. Renovations or additions to detection and alarm systems shall be made in strict accordance with NFPA *72, National Fire Alarm Code.*

2.6.5.3.2. Affected Devices. As area expansions or renovations take place, including changes to floor-to-ceiling partition walls and systems furniture, consideration must be given to the necessity of relocating or installing any of the following:

2.6.5.3.2.1. EPO and APO switches.

2.6.5.3.2.2. Emergency Egress Lighting.

2.6.5.3.2.3. Sprinkler Heads.

2.6.5.3.2.4. Smoke Alarms.

2.6.5.3.2.5. Heat Rise Detectors.

Section G-Electrical Power Systems.

2.7. General. This section provides specific SAFB technical and technical support power requirements and standards.

2.7.1. Technical Power System (TPS) Characteristics.

2.7.1.1. General. The TPS supplies electrical power to critical equipment loads. The critical loads require uninterrupted, regulated power at 60Hz and are provided power from an Uninterruptible Power System (UPS). Installations shall be IAW NFPA 70 (NEC).

2.7.1.2. TPS Distribution System. In the TPS, power is distributed from wall-mounted main panels to wall-mounted sub-panels via EMT conduit or metal wireway. From sub-panels, individual conduits are brought via metal wireway EMT conduit to power receptacles mounted under, or flush with, the raised floor. Underfloor electrical receptacles shall be twist-lock type.

2.7.1.3. Load Balancing. The designer shall balance all loads to the maximum extent possible (i.e., less than 10 percent unbalanced 3-phase loads) to minimize current flow in the neutral conductor.

Percent out of balance = 100 x [1 – (lowest load per phase/highest load per phase)]

2.7.1.4. 60Hz System Characteristics. Power is delivered to the UPS output bus at 480V, 3-phase, 4-wire and is stepped down at the various technical power substations. The 60Hz technical power specifications for wall-mounted power panels inside the modules are as follows:

Nominal Voltage: 120/208V, 3-phase, 4-wire
Frequency: 60.0Hz ± 0.06Hz
Voltage Regulation: ±2% with 50% phase unbalanced

2.7.2. Technical Support Power System (TSPS) Characteristics.

2.7.2.1. General Description. The TSPS supplies electrical power to the facility loads. The normal power source is the local commercial utility. Utility power is backed up by standby Class B diesel generators. The standby system is provided with the controls of a Class A plant. The standby system is capable of meeting the power requirements of all critical and essential loads. TSPS distribution shall meet the applicable requirements as TPS distribution. TSPS distribution (feeders, etc.) shall not be installed in raceways or conduits that are being used for TPS distribution.

2.7.2.2. Load Criteria. Most of the TSPS loads are motors and lighting that can tolerate momentary, in some cases extended, power outages without compromising the operational mission. In the event that installed equipment is powered from the TSPS, the same load

standards and criteria shall apply as equipment on the technical power system. Equipment processing classified information (RED) shall meet the installation criteria of AFSSM 7011.

2.7.2.3. Load Balancing The requirements of 2.7.1.3, Load Balancing for TPSs, are also applicable to the TSPS.

2.7.3. Power Cables and Conductors.

2.7.3.1. Cable Requirements. The distribution of power shall be by jacketed multiconductor cable or individual wires. Cables shall be installed in accordance with the NEC and shall be routed through appropriate conveyances. Cables shall have a fully rated or oversized neutral and a ground wire. Individual conductors shall meet the following requirements:

2.7.3.1.1. 600 volt rating.

2.7.3.1.2. Maximum operating temperature of at least 90° Centigrade.

2.7.3.1.3. Suitable for damp or dry locations.

2.7.3.1.4. Flame retardant and heat-resistant thermoplastic insulation.

2.7.3.2. Cable Color Code. Power conductors of a standard "wye" configuration shall be color coded as follows:

120/208V	**277/480V**
Phase A – Black	Phase A – Brown
Phase B – Red	Phase B – Orange
Phase C – Blue	Phase C – Yellow
Neutral – White	Neutral – Gray
Ground – Green	Ground – Green

2.7.4. Power Distribution Systems.

2.7.4.1. Local Power Distribution. Floor-mounted Power Distribution Units (PDUs) or additional wall-mounted power panels shall be installed for the purpose of providing localized power distribution and control for equipment that is installed in the modules. The physical location of such power distribution systems shall be determined by the installing agency. Each distribution system should be as close to the loads it serves as possible.

2.7.4.2. Local Power Distribution Identification. Sub-panels shall be labeled with the following information:

2.7.4.2.1. Panel number (as assigned by the Site Integration Office).

2.7.4.2.2. Source of power (main panel number and location).

2.7.4.2.3. Ampere rating.

2.7.4.2.4. Voltage.

2.7.4.3. Terminal Boxes. If an external terminal box is provided as a part of the power input circuit, the box shall be mounted beneath the raised floor on the wireway or from conduits.

2.7.4.4. Molded Case Circuit Breakers.

2.7.4.4.1. Selection. The power distribution system shall be provided with molded case circuit breakers sized in accordance with the NEC for their assigned loads.
Exception: Newly installed breakers shall be rated at 20 amps or better. Circuit breakers rated at 15 amps are allowed when the derating requirements specified in the NEC, Article 362-5, are applicable to the installation. These circuit breakers shall be of the same type and manufacturer as those in the wall-mounted power panels provided by the facility. Also, if the equipment manufacturer recommends a single 15 amp twist-lock receptacle, a 15 amp circuit breaker may be used to comply with table 210-21 (b) (3) of the NEC.

2.7.4.4.2. Circuit Breaker Types. The circuit breaker panel shall have output circuit breakers sized for the individual load requirements. Provisions shall be made for 25 percent spare breakers or space for breakers for new installations. Circuit breakers shall have thermal-magnetic trips. Any main breaker in the main panel shall have a minimum interrupting capacity of 22,000 amps.

2.7.4.4.3. Rotating Machine Loads. The voltage from the TPS system should not be connected to any motor generator, motor, or other rotating machine. The exceptions to this rule are the equipment rack fans for equipment racks or computer peripheral equipment (i.e., a Direct Access Storage Device (DASD)).

2.7.4.5. Circuit Identification.

2.7.4.5.1. Panel Schedule. The panel schedule information shall consist of the equipment and room number (i.e., 008-024) or a brief description of the equipment and room number, number of poles, and circuit breaker size.

2.7.4.5.2. Additions/Modifications. Any addition or modification with respect to the loads of a power distribution system shall be legibly documented by the installing agency at the time of the modification. Updates shall be made on a schedule located inside of the panel cover. The information shall consist of an estimated load, the room number in which the equipment is located, the date the schedule was updated, and the equipment number (or brief description of the equipment).

2.7.4.6. Wire Labeling. Phase, neutral, and green ground wires within the baseline shall be labeled with the circuit number of the circuit breaker in the power panel from which the wires originate and at the destination termination.

2.7.4.7. Load Cables. Cables supplying power to individual loads from the power distribution system shall be pre-cut to length and either hardwired to the load terminals or provided with matching connectors, if the load requires it.

2.7.5. TPS Receptacle Marking. All TPS receptacles and associated power strips shall be labeled (engraved in plastic) with the following information (see Figure 2-10 for a typical example of a TPS receptacle label):

2.7.5.1. “For Equipment Only; Do Not Use for Vacuums, Lights, Etc.”

2.7.5.2. Panel and circuit breaker numbers that serve the receptacle.

2.7.5.3. The color of the label shall be orange with black lettering.

Note: Power Strips labels shall be attached to the power cord as not to obstruct use of the strips, but retaining easy identification.

2.7.6. TSPS Receptacle Marking. TSPS receptacles and Power Strips shall be labeled (engraved in plastic) with the following information (see Figure 2-l 1 for an example of a typical TSPS receptacle label):

2.7.6.1. “Non-UPS power.”

2.7.6.2. Panel and circuit breaker numbers that serve the receptacles.

2.7.6.3. The color of the label shall be yellow with black lettering.

2.7.6.4. Labeling for Power Strips are the same as TPS.

2.7.7. Sizing/Loading Policy for 60Hz Systems (TPS and TSPS). To ensure standardization of the NEC interpretations for sizing and loading the TPS/TSPS panels in the Operations building, the following criteria shall apply:

2.7.7.1. New and Existing Sub-Panels.

2.7.7.1.1. Sub-panel distribution breakers shall be sized at a minimum of 125 percent of the connected nameplate loads.

2.7.7.1.2. Sub-panel main breakers shall be sized at a minimum of 125 percent of total nameplate load connected to the panel.

2.7.7.1.3. Distribution breakers from the main panel to the sub-panels shall be rated equal to or greater than the sub-panel main breaker (i.e., a minimum of 125 percent of the nameplate loads on the sub-panel).

2.7.7.1.4. When additional power is required and the criteria of 2.7.7.1.1 - 2.7.7.1.3 would be violated, a baseline based on measurements may be applied in place of nameplate loads. The baseline shall be established by measuring the maximum continuous amps on each phase and the neutral conductors for at least 15-days. A new load may be added to a panel if the baseline amps plus the new load (nameplate or measured load from an identical installation) does not exceed 80 percent of the panel rating, panel main circuit breaker trip rating or conductor wire size rating. After the new load is added, a new baseline shall be established by another 15-day measurement period followed by monthly monitoring periods of at least 24 hours for the next 11 months. If the baseline maximum amps increases by five percent or more, a new baseline shall be established using the 15-day measurement period. Measurements shall be taken in amps using true RMS measuring equipment.

2.7.7.1.5. The baseline maximum amps (see 2.7.7.2.2) shall be multiplied by 1.1 (110 percent) to establish the calculated minimum demand load in amps.

Figure 2-10. Technical Power Supply Label.

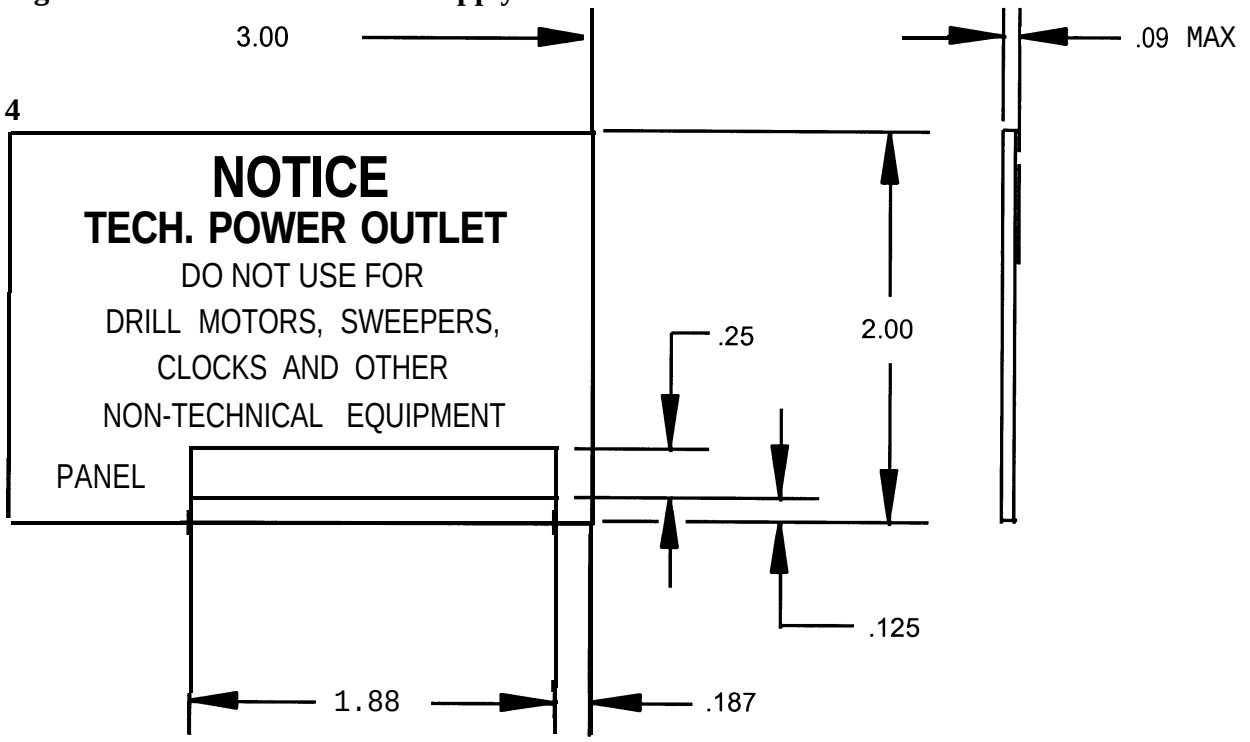

Figure 2-11. Technical Support Power Supply Label.

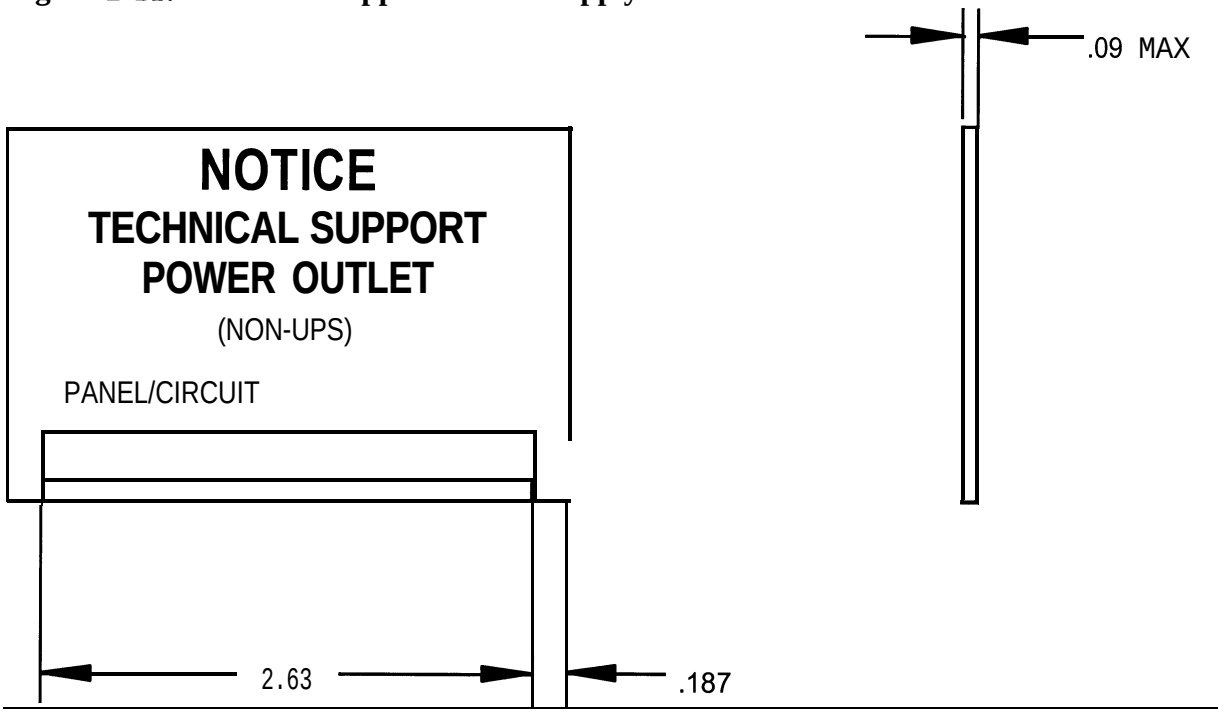

2.7.7.2. Adding Loads to Main Panels (TPS or TSPS). The ability to add loads to main panels shall be based on the following criteria:

2.7.7.2.1. New loads may be added to main panels where the combined loads made up of nameplate load and measured baseline loads plus the proposed new load do not exceed 80 percent of the main breaker rating.

2.7.7.2.2. The requirements stated in 2.7.7.1.4 shall also apply for loads on Main Panels. If the baseline maximum amps increases by five percent or more, a new baseline and calculated minimum demand (see 2.7.7.1.5) shall be established.

2.7.7.2.3. All feeders must have overcurrent protection in accordance with the NEC.

2.7.7.2.4. Any new or additional panel (other than upgrades) shall be sized at 125 percent of the new nameplate loads plus an additional 25 percent for future growth. Measured loads may be substituted for nameplate loads when the installation and measurement of identical equipment has been established.

2.7.7.3. Neutral Conductor Wire Sizing For All Non-Linear Loads.

2.7.7.3.1. Feeder neutral conductors for the main panel of each module shall be measured either in the module or at their respective feeder source in the substation from which they originate. The measurement should be done at least once a year for a period of one week to ensure neutral currents do not become excessive due to additive harmonic currents.

2.7.7.3.2. In an effort to avoid over-currents on the neutral conductor, the neutral shall be at least the same size as the ungrounded circuit conductors.

2.7.7.4. Electrical Requirements for System Furniture.

2.7.7.4.1. New Installations. New system furniture shall have an eight-wire (8-wire) or ten-wire (1 O-wire), wye configuration electrical system and shall either be connected to individual 20 amp branch circuit breakers (up to three circuits), or one 3-pole circuit breaker. The wiring shall consist of a separate neutral conductor for each phase conductor and may share a ground conductor. Refer to the manufacturer's documentation for the exact wire configuration. The minimum wire size shall be #12 AWG in support of a maximum 20 amp circuit breaker. The installation shall also meet the requirements listed below.

2.7.7.4.1.1. The installation shall not combine technical and non-technical power sources.

2.7.7.4.1.2. The installation shall not combine RED and BLACK power sources.

2.7.7.4.1.3. The installation shall be limited to six (6) workstations per 3-phase systems furniture group and two (2) personal workstations per input phase.

2.7.7.4.2. System Furniture Upgrades or Modifications. System furniture upgrades or modifications shall comply with the requirements of new installations, above. In the event that the system furniture wiring does not have a separate neutral for each input phase conductor, then one of the following multi-wire circuit configurations shall be used.

All three input phases shall originate from a single 3-pole circuit breaker and the neutral shall be #10 AWG.

- OR -

The three input phases shall be configured such that the location of the circuit breakers allows a single handle tie to physically connect all three circuit breakers. In the event one circuit breaker is tripped, all three circuits breakers shall trip. The neutral shall be #10 AWG.

Note: The upgrade or modification shall also be limited to six (6) workstations per 3-phase systems furniture group and two (2) personal workstations per input phase.

2.7.8. Verification of New Installations or Major Modification. Upon completion of a new installation or major modification, the power and grounding system shall be verified for harmonic distortion and currents on the neutral, green safety wires and/or connections to the equipotential ground (EPG). The Site Integration Office shall perform these tests.

Section H-Grounding Standards.

2.8. General. This section provides SAFB grounding requirements.

2.8.1. Facility Provisions. Each facility in the SAFB Configuration Baseline has been provided with grounding capabilities as described below.

2.8.1.1. Grounding Panels. Grounding panels are located near the service entrance power panels and connected to a ground plate located at or near the power and signal service entrance. When an Equipotential Grounding Plane (EGP) is installed in an area, all grounding plates shall be electrically connected to the EGP.

2.8.1.2. Raised Floor System. A raised-floor system is a drop-in or removable grid system and shall not be used or supplemented as a safety (green wire) ground or a signal reference ground.

2.8.1.3. Green Wire Bus and Grounding. A safety (green wire) ground bus is provided in each power distribution panel. All power feeders and branch circuits shall be installed with a (safety green wire) grounding conductor run with the phase and neutral conductors. The copper safety green wire grounding conductor shall be sized IAW NEC table 250-95 and/or MIL-HDBK-419 table l-21. Aluminum or copper-clad aluminum wire shall not be used.

2.8.2. Grounding Design.

2.8.2.1. Conductors. All safety grounding conductors shall be:

2.8.2.1.1. Insulated. Exception: 2.8.2.2.

2.8.2.1.2. Colored green, green with yellow stripe, or green marked at each end. Exception: 2.8.2.2.

2.8.2.1.3. Sized IAW NEC 250-94.

2.8.2.1.4. Connected by bolting or screws able to maintain 1200 to 1500 psi between contact surfaces or welding at each termination.

2.8.2.2. Cable Tray Systems. A bare AWG No. 2 copper conductor shall be laid throughout each cable tray system and connected with a mechanical clamp to each cable tray section. The tray system conductor shall be bonded in at least six places to the raised-floor structural system for tray systems greater than 20 feet in length. Individual trays of 20 feet or less shall have pedestal grounds at each end. Additionally, the tray system shall be bonded to the facility ground.

2.8.2.3. Specialized Grounding Systems. The use of an EGP has eliminated the need for specialized grounding systems. An EGP eliminates large differences in potential across the ground plane, whereas the use of specialized grounding systems can increase these differences. Specialized grounding systems should be avoided and consideration given to converting specialized systems to an EGP. If conversion to an EGP system is not possible, the specialized system must be reviewed by 50 SW for safety, security, and signal ground integrity and approved by BCE before installation design is completed.

2.8.2.4. Derived AC Systems.

2.8.2.4.1. Neutral Grounding. The neutral of all derived AC systems shall be grounded with an insulated conductor the same size or larger than the largest service or secondary conductor or AWG No. 4, whichever is greatest. Derived AC systems shall have their neutrals grounded at one point only.

2.8.2.4.2. Isolated Ground Bus. Any isolated ground bus shall be independently connected to ground

2.8.2.4.3. Safety Ground Connections. Safety (green wire) grounds shall be run with the phase and neutral wires and connect at the source power panel ground bus. A green wire ground shall be provided in all power cables.

2.8.2.4.4. Filter Grounding. At the filter of a shielded area, the grounding conductor shall be bonded to the unfiltered and filtered sides of the filter box. Additionally, the grounding conductor on the filtered side shall be bonded to building steel within a module. This

procedure applies to new construction and modifications to existing power cables in shielded areas that have not been installed in this manner.

2.8.3. Grounding Interconnections.

2.8.3.1. Shielded Areas. In shielded areas, all classes of grounding shall be terminated either on the module's ground plate or on the ground panels (see 2.8.1.1). In shielded areas, the floor plate may be used when the shortest possible grounding conductor length is required or when ultra low noise audio grounding is required.

2.8.3.2. Unshielded Areas. In unshielded areas, separate RED and BLACK grounds are provided for grounding. When an EGP is installed, the RED and BLACK grounding panels/plates shall be electrically connected to each other and to the EGP.

2.8.3.3. Equipotential Grounding Plane Applications. Per MIL-HDBK-4 19, where new grounding systems are to be installed or where the grounding system is to be converted from the existing Single Earth Ground Point (SEGP) to an EGP, the installing agency must ensure the following:

2.8.3.3.1. The EGP scheme shall satisfy high and low frequency communications/electronics equipment applications.

2.8.3.3.2. The EGP shall comply with MIL-HDBK-419. In the event of a conversion from an existing ground system to an EGP, a ground system noise survey and a ground system differential noise voltage test shall be conducted before and after each module technical ground system conversion in accordance with the requirements of MIL-HDBK-419.

Note: For verification of new equipment or major modifications of equipment that connects to the grounding systems, SCXS shall make measurements to ensure integrity of the grounding systems is maintained.

Section I-Communications Cable Installations.

2.9. General. Unique SAFB communications cable installation standards are outlined in this section.

2.9.1. Fiber Optic and Metallic Cables. This section applies to fiber optic and metallic cables that are used for classified and unclassified data and voice communications and Local Area Networks (LANs) on SAFB. Fiber optic cables with non-conductive characteristics (i.e., non-conductive jackets, strengtheners, etc.) and shielded metallic cables shall be used throughout the SAFB cable distribution system.

2.9.2. SAFB Cable Distribution System. The SAFB cable distribution system encompasses the cable conveyances located underfloor and in the cable chases and cable vaults, the conveyances in the utilidor between buildings, and the network of duct banks and manholes

that connect SAFB buildings and facilities. These conveyances provide for neat, orderly cable installations that promote efficient cable distribution and ensure cable protection. For these reasons, unused cables (other then project/growth tagged) shall be removed per paragraph 2.13.

2.9.2.1. Cable Protection. Communications cables shall penetrate a wall in a manner that shall protect the cable from damage and maintain the fire rating of the wall. This may be done by using an insulated, throat-type bushing or similar device.

2.9.2.2. Installation Compliance. Installations shall comply with the NEC (NFPA 70, article 300-21), AFSSM 7011, NSTISSAM TEMPEST/2-95, and the Air Force Handbook for EMI/EMC (DH l-4).

2.9.2.3. Communications Cable Distribution. Distribution of RED and BLACK communications cables, including administrative communication cabling, shall be by means of RED and BLACK cable tray, conduit and "D" ring conveyances. When BLACK communications cables must be routed in the ceiling space, installation shall be in metal conduit or wireways (see 2.9.2 and 2.9.3). Cables may penetrate side walls of equipment racks to provide routing between adjacent racks only. Cables shall not be run on the surface of raised floors or under carpet tiles.

2.9.2.3.1. "D" Ring Installations. "D" rings may be used only as an extension of cable conveyances for unclassified shielded metallic cables used for administrative communications service (i.e., unclassified telephone service and unclassified administrative LAN service). The following guidelines apply:

2.9.2.3.1.1. "D" rings shall be no longer than six inches and shall be installed at intervals not to exceed four feet.

2.9.2.3.1.2. Total cable length supported by "D" rings shall not exceed 40 feet in from conveyance.

2.9.2.3.1.3. "D" rings shall be firmly attached to the under-floor stanchions by using an appropriate fastener such as nylon cable tie wraps or stanchion clamps (wire, tape, or string are not considered appropriate). Trim excess ends flush with retainer. (Reference TO 3 l-l 0-13).

2.9.2.3.1.4. "D" rings shall be installed in the lowest underfloor level. but not to touch the floor.

2.9.2.3.1.5. Cable installed through "D" rings shall not be routed diagonally and shall use the minimum number of 90 degree bends.

Figure 2-12 depicts intramodule cable routing for administrative communications cabling.

Figure 2-12. Intramodule Cable Routing for Administrative Communications (Building 400).

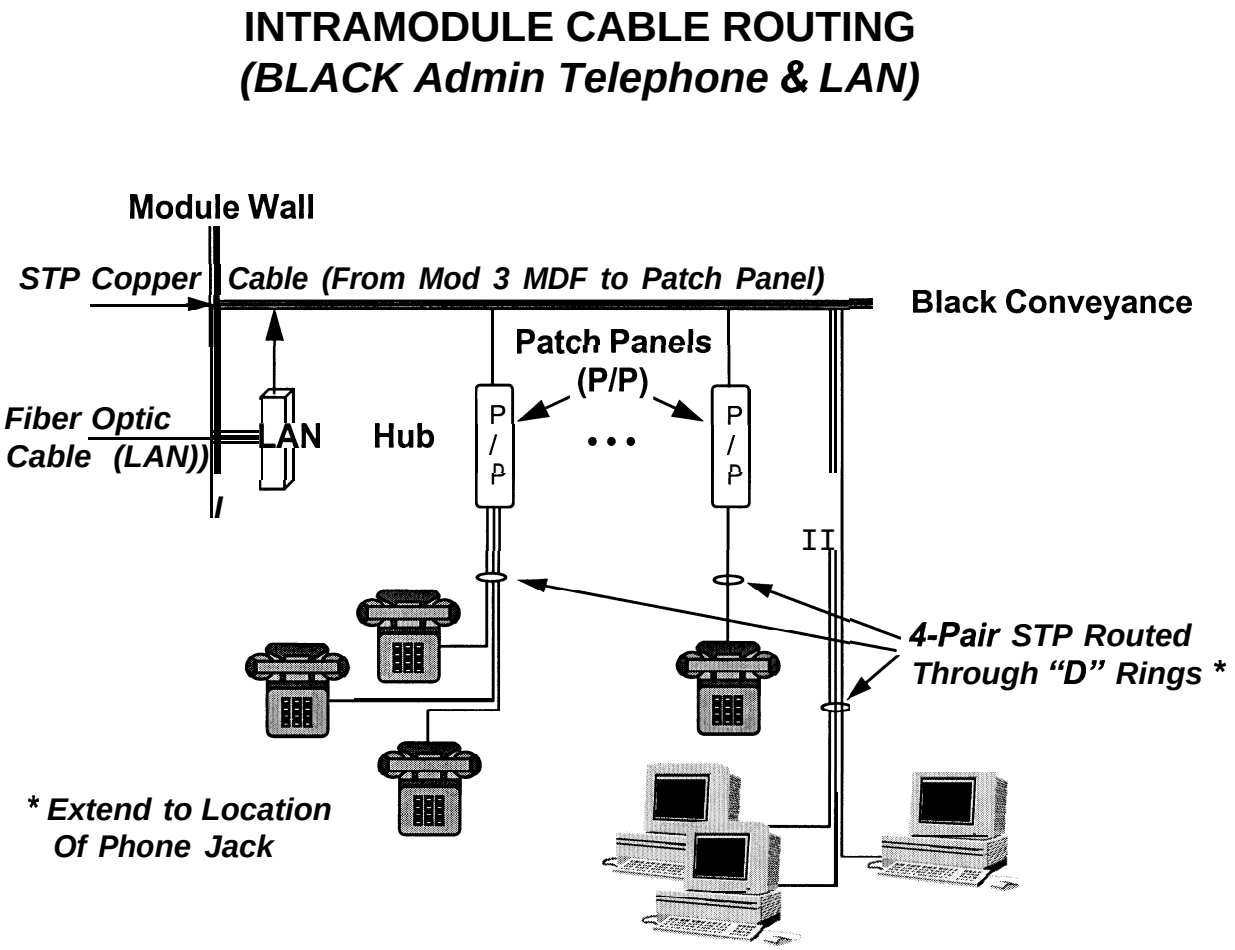

2.9.2.4. Communications Cable Distribution Between SAFB Buildings and Leaving SAFB.

2.9.2.4.1. Cable distribution between SAFB buildings shall be by means of approved conveyances within the base utilidor system and/or the manhole and duct bank system.

2.9.2.4.2. Top Secret/Special Access (TS/SA) cables to be installed between SAFB buildings shall use a Protected Distribution System (PDS).

2.9.2.4.3. Fiber optic cables with *non-conductive* characteristics shall be used for all communications cables entering or leaving SAFB.

2.9.3. RED/BLACK Separation. Cables shall be installed in the RED, BLACK, and fiber optic-only cable conveyances on SAFB per AFSSM 7011.

Note: Multi-strand fiber optic cables carrying both RED and BLACK signals must have an opaque, non-conductive covering around each strand. Such multi-strand cables must be installed only in RED conveyances or fiber optic-only conveyances.

2.9.3.1. Top Secret/Special Access (TS/SA) Conveyances. All metallic or fiber optic cables carrying clear text TS/SA signals shall be installed in TS/SA conveyances (within a TS/SA controlled area). Exceptions are by written approval only. When these cables exit the TS/SA controlled area, the cables must be installed in an approved Protected Distribution System (PDS) per AFSSI 3030.

2.9.4. Authorized Cable Types. All communications cables (fiber optic or metallic) and other non-power cables not specifically listed for an application, or as a component part of the computer systems and other equipment to which it is connected, shall meet the requirements described below.

2.9.4.1. Fiber optic cable shall have non-conductive characteristics (i.e., non-conductive jackets, strengtheners, etc.) and be NEC listed. (See Figure 2-13).

2.9.4.2. Metallic cables shall be shielded, NEC listed and shall have the capability to be grounded per MIL-STD-1542B. Metallic cables shall be grounded in accordance with TO 31-10-24.

2.9.4.3. For Administrative Phone or LAN, CAT-5 shall be used when installing copper cable.

2.9.4.4. Cable Installation Standards and Testing. Telecommunication and LAN copper infrastructure shall be installed and tested per this document (FIS) and TIA/EIA-568-A, TIA/EIA TSB-67, *Transmission Performance Specification for Testing UTP Cabling Systems.* This includes attenuation, NEXT, length, and wiremap in Basic Link and Channel configurations. If the infrastructure shall carry traffic on more than 2 pairs, then Equal-Level, Far-End Crosstalk (ELFEXT) tests are also required. All fiber optic cables shall be installed and tested per this document and TIA/EIA-526-14A, method B and TIA/EIA-526-7, method A.1 (see attachment 3, section D). All tests shall be at the appropriate wavelengths for the type of fiber (850 and 1310nm for Multimode, 1310 and 155Onm for Singlemode) and at a consistent pulse rate via an Optical Time Domain Reflectometer (OTDR) and Optical Power Meter. All testing documentation shall be delivered to 850 CS/SCX as part of the project documentation within ten (10) working days of project completion.

2.9.5. Waveguides And Rigid Coaxial Cable.

2.9.5.1. Installation. Waveguide and rigid coaxial cable runs shall be made as short as possible and shall contain a minimum of couplings and bends. Bends shall be accomplished using standard manufactured fittings. Particular care shall be given to the proper alignment and fitting of waveguide sections during installation. Horizontal sections of waveguide and rigid coaxial cable shall be level and vertical sections shall be plumb.

2.9.5.2. Pressurization. Where installation for pressurization is required, fittings shall be sealed and airtight. Bottled nitrogen shall be used for pressurization of waveguide systems and for coaxial cables that have normal leak rates of less than 0.0026-cfm. Systems having higher leak rates and/or that require a continuous supply of gaseous dielectric to maintain their electrical characteristics shall be pressurized with dehydrated air. A line bleed assembly shall be installed at the end of each line to permit purging. The assembly shall consist of a 2-1/2 inch diameter pressure gauge and a bleed valve. The pressure gauge shall be installed upstream of the bleed valve.

2.9.6. General Installation Guidelines.

2.9.6.1. Routing in Cable Trays.

2.9.6.1.1. All metallic communications cables shall be installed in separate RED/BLACK cable conveyance devices.

2.9.6.1.2. Cables shall be installed parallel and in an orderly fashion to permit the maximum number to be installed in each section of tray. Where cable transitions are made, cables shall be installed without tension. Cables shall be free from sharp bends and kinks.

2.9.6.1.3. All cables routed in the underfloor space or suspended from ceilings shall be installed in an approved conveyance. The distance from the conveyance to the raised-floor penetration shall not exceed a three-foot horizontal run.

2.9.6.1.4. Cables installed where the raised-floor height is one foot or less may be laid on the subfloor surface, provided the surface is free of objects that could damage the cable. Cable trays are not required in these areas; however, RED/BLACK separation shall be maintained.

2.9.6.1.5. While installing cables, the pulling tension of a fiber optic cable shall not exceed the manufacturer’s rated maximum tensile loading of the cable being installed. Fiber optic cable shall not be bent beyond the rated minimum bend radius of the cable being installed. A fiber optic service loop shall not exceed five feet on each end.

2.9.6.1.6. TPS/TSPS power cables shall not be installed in the same conveyance device as data and communications cables. Combination power and communications cables are not authorized.

2.9.6.2. Cable Termination Methods. Cables shall be terminated according to standard installation practices. The following guidelines apply:

2.9.6.2.1. All cables shall be terminated in connectors, terminal boards or barrier strips. Cable conductors shall be fanned out to match the terminals to which they are attached. Spare conductors shall be cut to a length sufficient to reach any contact and laced into the same bundle with the active conductors. Spare coaxial cables shall be terminated with their characteristic impedance on one end and to a bulkhead or equivalent connector on the source electronic rack.

2.9.6.2.2. All cables shall be supported at the termination points to remove connector and cable strain in accordance with TO 3 l-l O-22. Terminal devices shall be the kind that supports the wire at the insulation. Spare conductors in excess of the connector pins iin potted connectors shall be cut back. All cable ties used to restrain wire bundles or cables shall have their excess tails cut off and all sharp edges removed.

2.9.6.2.3. Spare conductors that penetrate a shielded enclosure shall be grounded within the enclosure.

2.9.6.2.4. All standard wires that connect to equipment with screw terminals shall be terminated with an insulated terminal lug. Crimp-on terminals shall be installed with a tool approved by the terminal manufacturer.

2.9.6.2.5. Shields and drain wires that are not required to be connected at the equipment shall be cut off close to the cable and taped. The shrink-on ID sleeve may be positioned to insulate the shield end instead of tape, provided the sleeve completely insulates the end of the cable.

2.9.6.2.6. The installing agency shall install terminal boxes as close to the equipment as practical. Boxes shall accept appropriate incoming and outgoing communications and shall have the volume required by the NEC for the number of conductors enclosed. A minimum of 20 percent spare terminal board strips shall be provided in each box.

Figure 2-13. Acceptable Cable Fire Rating Designators for SAFB.

Acceptable Cable Fire Rating Designators
(all listed for GENERAL PURPOSE USE or better)

Cable Tvpe	NEC Article	Rating Designator
Communication Cable	800	MPP, CMP, MPR, CMR, MPG, CMG, CM
Signaling Circuits	725	CL3P, CL2P, CL3R, CL2R, CL3, CL2
Fire Alarm Circuits	760	FPLP, FPLR, FPL
TV and Radio	820	CATVP, CATVR, CATV
Optical Fiber	770	OFNP, OFNR, OFNG, OFN
IT Equipment	645	DP, CL2, CL3, NPLF, FPL, OFN, CM, MP, CATV

* **PLENUM** or **RISER** rated cables are acceptable for use but not required. NEC Article 645. (Will show up as a suffix on cable rating designated by a "P" or "R").

* **ALL** cables shall have the UL listing printed on the insulation as proof that the specific cable has passed the tests required by the NEC.

* Under NO conditions shall a cable designator or rating ending in "C" (CONDUCTIVE JACKET) or "X" (RESIDENTIAL) be approved for installation at SAFB.

* Non fire-rated cabling may be used in direct-bury installations only.

2.9.6.3. Tray Fill Considerations. Cable lengths shall be selected to minimize excess cable in the trays and cable wireway. Excess Fiber Optic cable shall be no greater than five feet at each end for a service loop. **Service loops shall not be put in cable trays or on the floor.** Copper, when installed and fanned correctly, should not need service loops. The maximum cross-sectional area fill rates shall be IAW NEC article 318, section B. Acceptable examples for supporting maintenance service loops are as follows:

2.9.6.3.1. Cable shall be coiled into service loop and attached to the side of the cable tray with a nylon cable tie wrap.

2.9.6.3.2. Cable shall be coiled into a service loop and attached to the cable tray support stanchion with a nylon cable tie wrap.

2.9.6.4. Cable Splicing.

2.9.6.4.1. Metallic Cable. Lengths of cable shall be continuous and without splices between termination points. When required, the only cable-to-cable interconnection permitted shall

be by connecting cables that have been terminated in either multi-pin or coaxial connectors. Interconnections shall be moisture resistant and continue all electrical and mechanical characteristics of the cable. In-line connectors for both multiconductor and coaxial cables shall be covered with an appropriate insulating sleeve (i.e., heat-shrink tubing). Complete integrity of the cable shielding shall be maintained. When metallic cables are extended in this manner, the requirements defined in the following sections shall apply.

2.9.6.4.1.1. Insulation of an in-line connector shall be by installation of a section of heat-shrink tubing over the connector. The tubing manufacturer's *Installation Specifications* shall be used to shrink the tubing down to an even fit over the full connector run. Tubing shall be of the correct size to shrink snugly over the full length of the installation. The tube shall extend at least two inches beyond the connector at each end. Heat-shrink tubing shall comply with MIL-I-7444.

2.9.6.4.2. Fiber Optic Cable. Specific installation procedures for fiber cable splicing shall be **fusion** type. (Reference TO 3 l-1 O-34).

2.9.6.4.2.1. Vendors have varying procedures for fiber cleaving, fiber end preparation and connector-to-fiber mating. Procedures for SAFB shall be per TO 3 l-lo-34 and other applicable TOs. All Equipment-unique installation instructions and procedures shall be submitted to 850 CS/SCX for evaluation prior to starting installation.

2.9.6.4.2.2. Installation, conveyance, and termination of fiber optic cables shall be done in accordance with TO 3 l-l O-34 to protect individual fiber strands from damage and provide appropriate strain relief.

2.9.7. Cable Marking. Cable designations shall meet size and location requirements as listed in TO 31-10-13.

2.9.7.1. Cable Labeling Requirements. Each cable shall be identified at the time of installation by number and letter combinations using permanently attached markers. Cables shall be marked with the cable number at both ends, inside manholes and junction boxes, and within 12 inches of entry and exit from multi-cable transits, waveguides, wall penetrations, and enclosures.

2.9.7.1.1. If interduct flexible conduit is used, cable numbers of cables routed through the conduit shall be marked on the outside of the interduct conduit. Cable conveyance enclosures that do not allow visual verification of cables shall have an attached tag that lists the cables contained therein. If the cable is fiber optic, the words *"Fiber Optic Cable"* shall be labeled next to the cable number. This requirement shall be waived if the cable has been marked *"Fiber Optics"* by the manufacturer at the time the cable was built. Where the ends of the cable are not visible or accessible, the labels shall be affixed to the cables down line at the first place where access can be achieved.

2.9.7.1.2. The Start Equipment Reference Designator (SERD) and the End Equipment Reference Designator (EERD) shall be marked at each end of the cables on the same labels as the Cable ID number. Cable markers shall be of non-conductive material. Figure 2-14 illustrates the required cable marking.

2.9.7.2. Desktop Computers. Cables that connect the components of stand-alone desktop computers are excluded from cable marking requirements. Cables that provide external connectivity (i.e., to the LAN) shall be labeled appropriately.

2.9.7.3. Attaching Devices. An identification label shall be attached to each cable by means of non-metallic attaching devices such as polyethylene tubing, nylon label ties, self-laminating adhesive vinyl, silicone rubber sleeving, or synthetic resin sleeving in accordance with MIL-M-60903.

2.9.7.4. Cable Marking Tape. If existing cables are to be re-labeled and shrink tubing cannot be used, the label shall be attached using tape in accordance with MIL-M-60903.

2.9.7.5. ID Tag Marking. Identification tags shall be marked in accordance with MIL-M-60903. Markings shall be of sufficient size and spacing to be legible, and of a color that contrasts with the material on which it is marked. All markings shall be permanent.

2.9.7.5.1. Buried Cables. Direct-buried cables shall be marked with the cable number between end markings at intervals not greater than 10 feet.

2.9.7.5.2. Marking. Marking of direct-buried cables may use any of the following methods:

2.9.7.5.2.1. Permanent ink stamping.

2.9.7.5.2.2. Paint stenciling.

2.9.7.5.2.3. Typing/hand-printing (covered with a suitable protective material).

2.9.7.5.2.4. Hot impression stamping (Kingsley machine or equivalent).

Figure 2-14. Typical Cable Identification Tag Requirements.

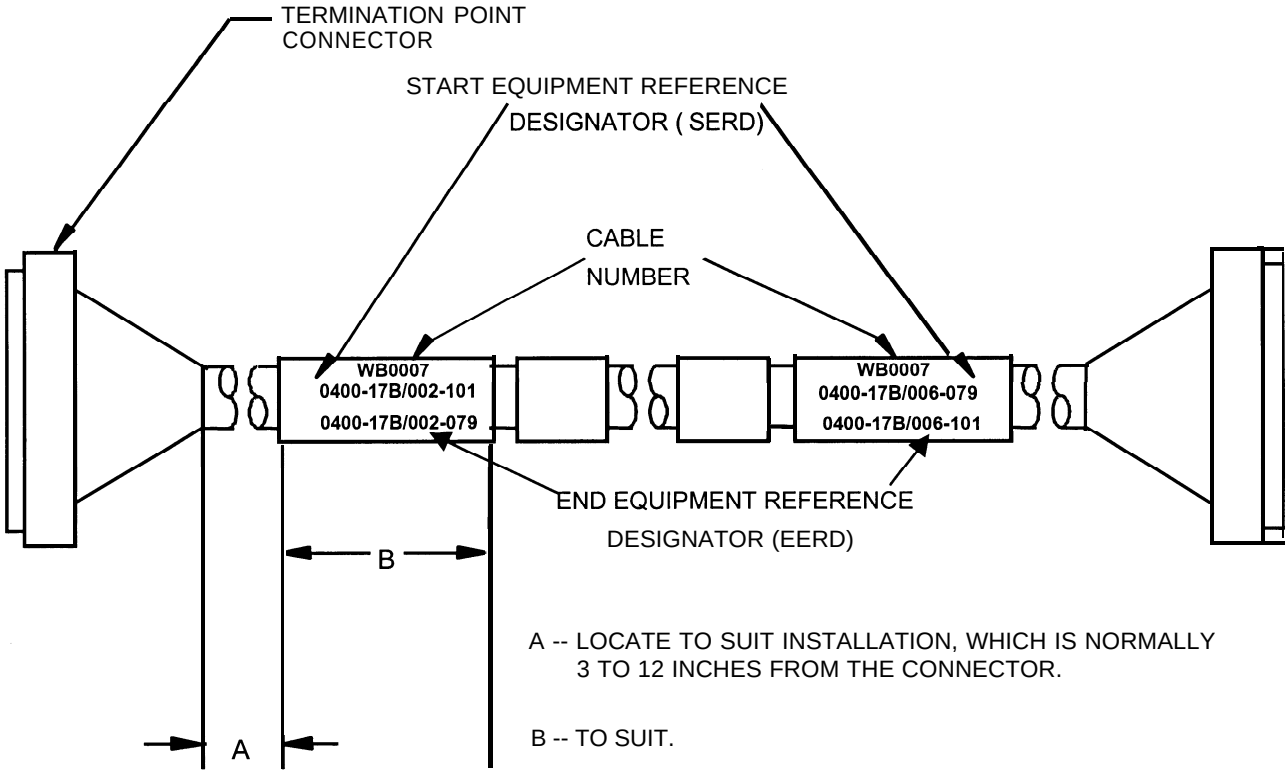

Section J-Cable Conveyance Devices.

2.10. General. This section defines specific conveyance device requirements.

2.10.1. RED and BLACK Conveyances. Separate RED and BLACK conveyances have been installed, as required, to provide raceways for fiber optic and metallic communications cables. Between buildings on SAFB, conveyances have been installed in the utilidor and in the underground manhole and duct bank system to distribute BLACK communications cables.

2.10.2. Cable Trays. Cable trays shall be installed in a pattern that provides optimum coverage of the module and minimizes cable lengths. Generally, cable trays shall be installed parallel to air-conditioning ducts to minimize obstruction to the installation of cables. RED communications cable trays shall be separated from BLACK trays as required by AFSSM 7011. Separate trays dedicated to fiber optic cables may be installed in building 400. The physical separation required between RED and BLACK metallic cables shall not be met by physically separating cable within the same cable tray.

2.10.2.1. Tray Types. Trays shall be hot-dip galvanized steel or aluminum, ladder or vented closed-bottom type and shall be sized as required. Tray sections shall be connected together IAW TO 31-10-24.

2.10.2.2. Anchoring. Trays shall be rigidly anchored to the facility at intervals not exceeding the manufacturer's recommended specifications for loads of 75 pounds per linear foot or 8 feet, whichever is less, in one of the following methods:

2.10.2.2.1. When installed on the floor, trays shall be bonded to the floor with an approved adhesive. Power-actuated devices such as "redheads" or penetrating devices shall not be used.

2.10.2.2.2. When the trays are suspended below the raised floor, they shall be rigidly supported to the floor pedestals using an approved unistrut/clamp system.

2.10.2.2.3. When suspended in other locations such as the cable chases, the trays shall be supported via an approved beam clamp, threaded-rod, and unistrut system.

2.10.2.3. Grounding. Cable trays shall be grounded as described in 2.8.2.2.

2.10.2.4. Tray Marking. Cable trays shall be marked by the installer, at the time of installation, with a number assigned by Cable Management. Marking shall occur at all intersections, corners, and at intervals of 10 feet or less. Trays shall be marked on the top and sides.

2.10.2.4.1. BLACK Communications Cable Trays. Cable trays that are dedicated to BLACK communications cables shall be visibly labeled “UNCLASSIFIED CABLES ONLY” at intervals of approximately five feet. Labeling shall be performed by the cable tray installer at the time of installation. See figure 2-15 for a typical unclassified cable tray label.

2.10.2.4.2. Fiber Optic Cable Trays. Cable trays that contain or are dedicated to fiber optic cables shall be visibly labeled “CAUTION FIBER OPTIC CABLES” at intervals not to exceed six feet. Labeling shall be performed at the time of cable tray installation by the installing agency or by the agency adding fiber optic cable(s) to existing trays. See Figure 2-16 for a typical fiber optic tray label.

2.10.3. Conduit. In underfloor areas and above the ceilings, rigid metal conduit or electrical metallic tubing may be used to provide conveyances for metallic and fiber optic communications cables. All RED/BLACK separation requirements shall be observed in the installation of these conduits: To protect cables routed above-floor, flexible metal or non-metal conduit (maximum total length of six feet) shall be used to transition from floor penetrations to equipment that is not installed in racks. In the cable chases, utilidor, manhole system, and cable tray system, non-metallic flexible conduit may be used to provide additional protection to cables that transition out of standard cable conveyances, provided it meets fire code. Flexible conduit shall not be installed in cable trays or in a manner that shall obstruct cable tray fill capacity.

2.10.3.1. Rigid Metal and EMT Conduit. Conduit shall be in compliance with Section H, Grounding Standards. Set screw type couplings shall not be used. Rigid metal conduit and EMT that are used as cable conveyances and supported by floor stanchions shall be bonded at one end to the cable tray ground or the facility ground. Installations that are not supported by floor stanchions and that consist of more than one section shall be bonded at both ends to the facility ground.

2.10.3.1.1. Metal Conduit. Metal conduit, installed above modular false ceilings, shall be suspended from building structure members and shall be electrically insulated from the equipment cabinets.

2.10.3.2. Flexible Metal Conduit. Flexible metal conduit shall be securely anchored within one foot of each end and at intervals not to exceed 4.5 feet, even if terminated into a fixture or equipment. Vertical installations of flexible metallic conduit inside walls may exceed six feet in length, and the 4.5 foot support requirement does not apply. In no case shall conduit be used as a safety ground. All flexible conduit shall be grounded to facility ground at each end, except where the conduit terminates in a box/receptacle for a unit load. When used in potentially damp areas, flexible conduit shall be used with THHN, damp/dry rated conductors.

2.10.3.3. Conduit Marking. Conduit that is installed as a cable conveyance rather than for transition protection shall be marked with a number assigned by Cable Management.

Marking shall be accomplished at the time of initial installation by the installer. If an installing agency installs a cable in an unmarked conduit, that agency shall mark the conduit with a number obtained from Cable Management. Marking shall occur at each end and at intervals not to exceed 5 feet. Refer to Cable Management for acceptable marking methods.

2.10.3.3.1. Cable Management issues four different types of conduit numbers. Three of the numbers depict the security classification levels of the cables that run through the conduits. The fourth type of number depicts the special type of cable running through the conduit. All conduits are labeled with a five digit alphanumeric number that begins with the letter “R”. The second letter will have an “N” for classified (RED), a “J” for unclassified (Black), an “L” for Top Secret, or an “S” for Fiber Optic Only, which includes both Red and Black fiber cables. The third letter and the following two numbers of the five digit number are consecutive counting indicators only and have no other significance.

Figure 2-15. Unclassified Cable Tray Label.

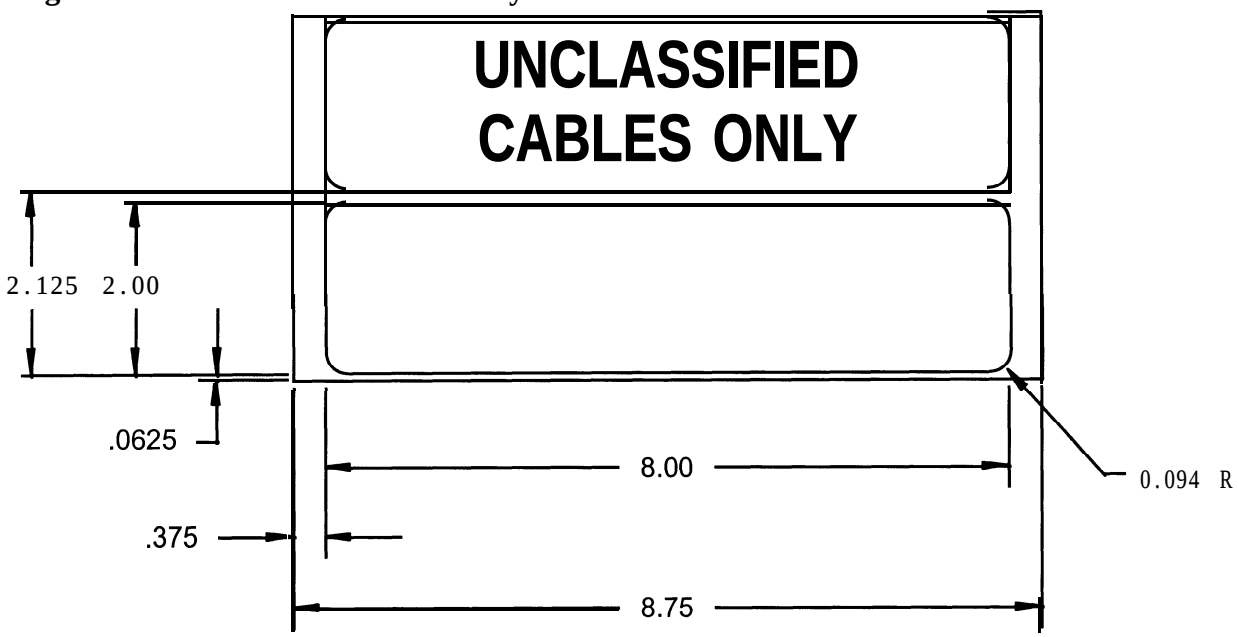

Figure 2-16. Fiber Optic Cable Tray Label (Black on Yellow).

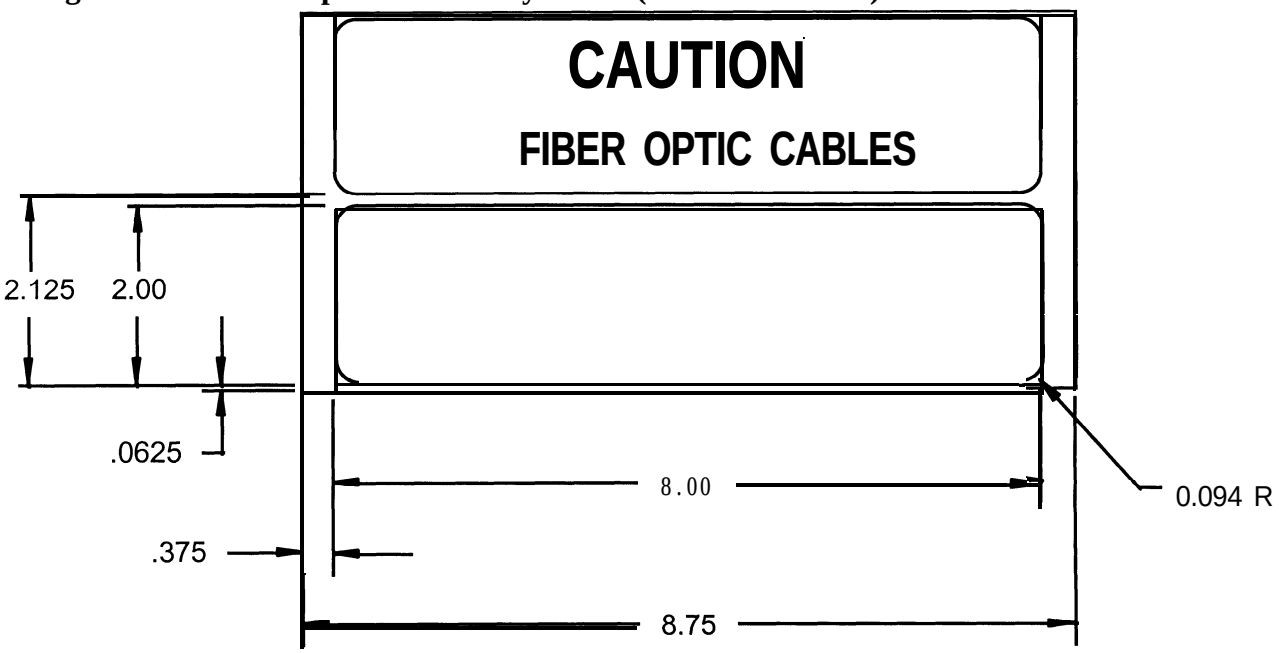

Section K-Miscellaneous Installation Requirements.

2.11. **General.** Miscellaneous installation standards not covered in other sections are defined.

2.11.1. Safety. Those agencies responsible for the installation of equipment and changes to the facility shall comply with the industrial safety accident prevention and safety and health programs defined in AFI 9 l-301 and Occupational Safety and Health Administration (OSHA) Standards, as applicable. These same agencies shall coordinate with the Site Integration Office in advance whenever dangerous materials are either shipped or hand-carried onto the site. This includes (but is not limited to) materials such as explosive charges, shots for thermite welding, and toxic or flammable gases. All such dangerous materials shall be stored in a designated area and in approved containers. Control of this material shall be the sole responsibility of each agency using the material. All safety and storage procedures used shall be in accordance with AFI 91-301 and OSHA Standards 29 CFR 19 10 and 29 CFR 1926.

2.11.1.1. Safety Aspects of Fiber Optics. During fiber optics installation activities, personnel shall be protected from levels of optical radiation that may be damaging to the eyes and from direct injury by fibers, particularly to the human eye or skin.

2.11.1.1.1. Optical Radiation. It is possible that the human eye can be damaged by the optical radiation from a fiber at particular power levels. If personnel must work with fibers that are emitting optical radiation, proper eye protection shall be observed. At all terminations and connections along an optical fiber length, a tag or sticker shall be placed as a warning of the presence of potentially harmful optical radiation. All terminations and connectors not in use shall be capped.

2.11.1 .1.2. Direct Injury. There is a risk of direct injury to the eye from small lengths or particles of fiber, particularly during cleaving operations. All personnel shall follow prescribed safety measures when cutting fiber optic cable. Protective eye shields shall be worn during cleaving or joining operations. Care shall also be taken to avoid glass fiber penetrating the skin. Due to the strength and small size of glass fiber, skin penetration can occur quite easily.

2.11.1.2. Special Design Considerations. Modifications to the modules of building 400 shall comply with all six conditions of NEC Article 645.

2.11.1.3. Welding, Cutting, Brazing and Open Flame Soldering. Before commencing welding, brazing, cutting or open flame soldering operations, an AF Form 592, USAF *Welding, Cutting and Brazing Permit,* shall be obtained from the SAFB Fire Department (50 CES/CEFI), located in building 717. Contractors are reminded that welding, cutting and brazing shall be accomplished according to OSHA 1910.252 or 1926.350, as applicable.

2.11.1.14. Safety Procedures for Raised Floor Openings.

2.11.1.14.1. Remove all carpet squares on the raised floor to be opened. If carpet squares cannot be removed, the carpet squares shall be folded back and taped or clamped so the entire raised floor to be opened is visible.

2.11.1.14.2. The raised-floor opening must be constantly attended by an individual when possible.

2.11.1.14.3. If an attendant is not being used, visible barriers are to be utilized. Barriers near each corner of the raised-floor opening is recommended. Use of brightly colored safety tape to connect each barrier is also recommended. Barriers must be in place when the raised floor is opened. Carpet shall be replaced to cover the raised floor after closing.

2.11.1.14.4. Paragraphs above do not apply to raised-floor openings during site preparation activities (large Jobs). For site preparation, the entire work area shall be restricted to site preparation workers and individuals requiring entrance for official activities. Workers, surveillance, and visiting personnel, shall be required to receive a safety briefing from the on site supervisor, prior to entry. This briefing shall consist of identification of all hazardous conditions and special precautions being employed.

2.11.1.15. Initial Underfloor Site Preparation. (No above-Floor Equipment).

2.11.1.16. Floor Tile and Stringer Removal.

2.11.1.16.1. Removal of contiguous floor tiles and associated stringers is permitted where no more than one 90 degree bend is formed by an open-floor area.

2.11.1.16.2. An open-floor area formed by the removal of contiguous floor tiles and associated stringers shall have a maximum width of one floor tile.

2.11.1.17. Site Preparation Involving Above-Floor Equipment.

2.11.1.18. Floor Tile and Stringer Removal.

2.11.1.18.1. Remove no more than ten contiguous floor tiles. If ten contiguous floor tiles are removed, no stringers may be removed.

2.11.1.18.2. If less than ten contiguous floor tiles are removed, one stringer may be removed.

2.11.1.18.3. If no more than three contiguous floor tiles are removed, up to two stringers may be removed.

Note: Equipment cooling requirements limit removal of floor tiles in areas where equipment is operating. Replace stringers and floor tiles according to the vendor's installation criteria. Vendor data is available in the Schriever Technical Library (STL).

2.11.2. Testing.

2.11.2.1. Continuity Tests. All wiring on site shall be tested for continuity. Before a system is tested for continuity, all intermediate connections shall be completed. Connections to equipment shall not be made until cable and wiring tests are completed.

2.11.2.2. Test Equipment. All test equipment shall use transient-free DC measurement techniques. Continuity testers using buzzers or bells are not permitted. Telephones may be used for communication, but they are not permitted for continuity testing. Optical Power Meters with source shall be used for continuity testing of all fiber strands (see Attachment 3, section D). Optical Time Domain Reflectometer's (OTDR) are not permitted for continuity testing.

2.11.2.3. Cable Defects. Any two- or three-conductor cables with one or more defective wires shall be replaced. For multiconductor cables consisting of twisted pairs (shielded or unshielded), the entire pair shall be replaced if any of the wires or shield is defective. For terminating, shield and drain wires shall be treated the same as any other conductor. Any two to four strand fiber optic cable with one or more defective strands shall be replaced. For multistrand fiber optic cable, all defective strands shall be replaced.

2.11.3. As-Built Information. After completion of any installation, test, or calibration, installation drawings and wire lists shall be redlined to reflect "as-built" configuration and delivered to the Site Integration Office within lo-calendar days after the installation date (work complete). Copies of as-built drawings and lists shall be delivered to the appropriate OPR (i.e., 850 CS/SCX, CE, etc.).

2.11.4. Raised-Floor Tile Removal And Reinstallation. When accessing the area under a raised floor, take care not to disturb the floor level adjustment. The following guidelines and safety procedures apply to removing raised-floor tiles and stringers.
Note: Floor Tile Removal. Due to the criticality of airflow for underfloor cooling, only the minimum number of floor tiles shall be removed at any given time for access to under floor areas that support an operational mission.
Note: In building 400, a maximum of two floor tiles per module may be removed at any given time when working in an operational module where the underfloor air distribution system is required for equipment cooling. The floor tiles and the carpet tiles both have installation arrows on the bottom. These arrows shall point west in the installed position.

2.11.5. Underfloor Configuration. The area beneath raised floors in the modules is provided to facilitate the installation and conveyance of communications cables and utilities and the

distribution of cooling air. Figure 2-17 illustrates the typical underfloor configuration in building 400.

2.12. Work Site Cleanliness. Equipment shall be protected from damage by debris of any kind, including dust, shavings or grindings from metal, wood, concrete or plastic. Care shall be taken not to allow such materials to enter the underfloor air plenum in an equipment module. Any cutting, drilling, or punch operation shall be performed in an outside, enclosed area unless specific written direction from SCXS is given to perform such operations within a building.

2.13. Removal of Equipment/Facility Preparation.

2.13.1. General Requirements. Equipment and facility preparation that is no longer required for operations shall not be abandoned in place. Installations that make previous installations obsolete shall remove the unused equipment and facility preparation in its entirety. This requirement is not intended to force the removal of installations that have planned specific uses in the future, but is meant to limit unnecessary congestion in the building. Site preparation left in place for future use shall be tagged with the project name, POC, organization and phone number. The agency requiring the site preparation shall furnish and install tags.

2.13.2. Receptacle Removal. Unused receptacles below the raised floor (including the wire, conduit, and circuit breaker at the panel) shall be removed. After removal of the circuit breaker, a blank spacer shall be installed in the vacant space and the door schedule shall be updated in accordance with 2.7.4.5. Unused openings in "J" boxes or wireways shall be closed.

2.13.3. Cable Removal. When removing equipment, be sure to remove all attached signal cables from the trays and conduits under the raised floor, above the ceilings, or in the walls. **DO NOT ABANDON THESE CABLES-REMOVE THEM COMPLETELY FROM THE PREMISES.** If the cables have an acceptable fire rating, and the de-installers decide to convert them to growth cables, then they can be coiled up and tagged as growth cables under the floor. A list of the status of all cables affected shall be given to the Cable Management Office and shall be included in the de-installing Form 19. If in doubt as to the end destination of a cable, then contact the Cable Management Office.

Figure 2-17 Typical 27 inch Underfloor Section.

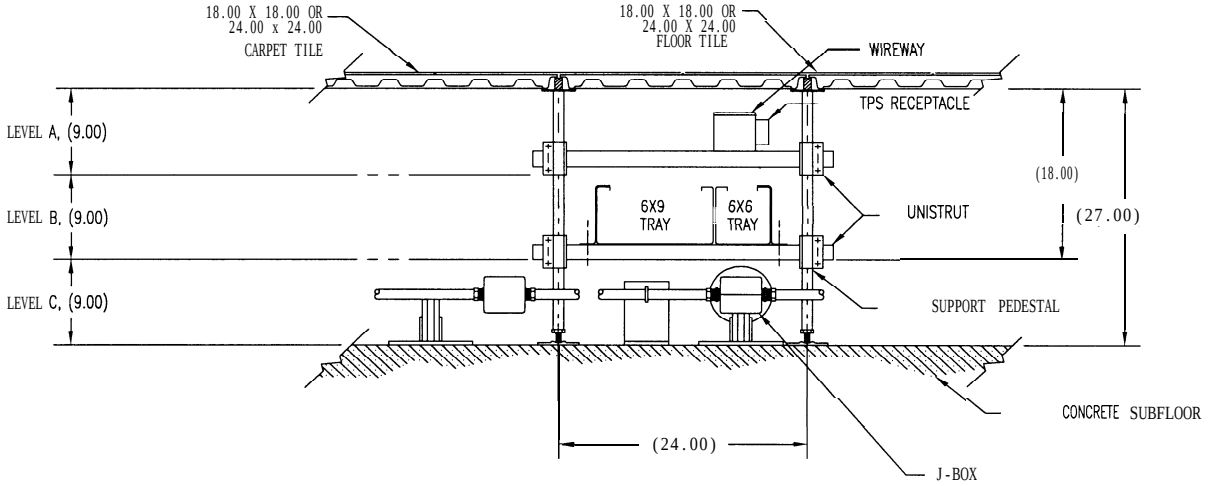

TYPICAL SECTION KEY

NOTE:

THE AREA BENEATH THE RAISED FLOOR GRID IS SHOWN IN THREE (3) EQUAL HORIZONTAL LAYERS. EACH APPROXIMATELY 9 INCHES DEEP. 'LEVEL A' EXTENDS DOWNWARD FROM THE UNDERSIDE OF THE RAISED FLOORING TO THE DEPTH OF APPROX 9 INCHES. 'LEVEL B' CONTINUES BENEATH 'LEVEL A' TO THE DEPTH OF APPROX 18 INCHES. 'LEVEL C' CONTINUES BENEATH 'LEVEL B' TO THE CONCRETE SUB-FLOOR, APPROXIMATELY 27 INCHES BELOW THE RAISED FLOORING.

'LEVEL A' IS RESERVED FOR POWER, WIREWAYS, AND RECEPTACLES.

'LEVEL B' IS RESERVED FOR SIGNAL CABLE CONVEYANCES.

'LEVEL C' IS RESERVED FOR GROUND EXTENSIONS, POWER DISTRIBUTION IN CONDUITS (FEEDERS FROM MAIN TO SUBPANELS AND FROM WIREWAYS TO RECEPTACLES) AND ADMINISTRATIVE COMMUNICATIONS CABLES ROUTED IN "D" RINGS.

WHEN INSTALLING SITE PREP AND OTHER UTILITIES DEVIATING FROM THE ABOVE STANDARD, A WAIVER ON THE FORM 19 IS REQUIRED. TRANSITIONS BETWEEN LEVELS MAY BE MADE TO AVOID OBSTRUCTIONS WITHOUT A WAIVER.

RICHARD E. WEBBER, Colonel, USAF
Commander

Attachment 1

GLOSSARY OF APPLICABLE AND REFERENCE DOCUMENTS AND ACRONYMS

Section A-Applicable Document Listing.

The following documents form a part of this document to the extent specified herein. In case of conflict between documents, the document with the strictest requirements (as determined by the Site Integration Office) shall prevail. In the case of document conflicts involving contractors, the Contracting Officer shall provide input for conflict resolution. These documents are available for review in the STL.

Identifier	Title
AF TO 31-10 Series (Current Issue)	Air Force Standard Installations Practices
AFI 33-203 (Current Issue)	The Air Force Emissions Security Program
AFI 91-301 (Current Issue)	Air Force Occupational and Environmental Safety
AFSC DH 1-4 (Current Issue)	Air Force Design Handbook for EMI/EMC
AFSSI 3030	Protected Distributions Systems
AFSSI 7010 (Current Issue)	The Emission Security Assessment
AFSSI 7011 (Current Issue)	The Emission Security Counter-Measures Review
DOD-D-1OOOB (Current Issue)	Drawings, Engineering and Associated Lists
Federal Specification (Current Issue)	Unions; Bronze or Brass, Thread Pipe Connections, WW-U-5 16B and Solder-Joint Tube Connections
MIL-C-27072	Cable, Special Purpose, Electrical,

(Current Issue)	Multiconductor
MIL-HDBK-411 ..... (Current Issue)	Long Haul Communications (DCS), Power and Environmental Control for Physical Plants
MIL-HDBK-419 ..... (Current Issue)	Grounding, Bonding and Shielding for Electronic Equipment and Facilities
MIL-I-63 1 ..... (Current Issue)	Insulation, Electric, Synthetic Resin Composition, Non-Rigid
MIL-I-7444 ..... (Current Issue)	Insulation Sleeving, Electrical, Flexible
MIL-I-243 9 1 ..... (Current Issue)	Insulation Tape, Electrical, Plastic, Pressure Sensitive
MIL-M-60903 ..... (Current Issue)	Marking of Electrical Wires and Cables
MIL-STD-1 OOG ..... (Current Issue)	Engineering Drawing Practices
MIL-STD-101B ..... (Current Issue)	Color Code for Pipelines and for Compressed Gas Cylinders
MIL-STD-1542B ..... (Current Issue)	Electromagnetic Compatibility and Grounding Requirements for Space System Facilities
MIL-STD-188-114 ..... (Current Issue)	Electrical Characteristics of Digital Interface Circuits
MIL-STD.285 ..... (Current Issue)	Attenuation Measurements for Enclosures, Electromagnetic Shielding, for Electronic Test Purposes
NACSEM 5204 ..... (Current Issue)	Shielded Enclosures
NSTISSAM TEMPEST/2-95 ..... (Current Issue)	RED/BLACK Installation Guidance

SD-CSOC-00034 (Current Issue)	Facilities Development Specification for the Consolidated Space Operations Center

American Society for Testing and Material (ASTM) Publications

B 32-76 (Current Issue)	Solder Metal
B 88-81 (Current Issue)	Seamless Copper Water Tube
C635-91 (Current Issue)	Standard Specification for Metal Suspension Systems for Acoustical Tile and Lay-In Panel Ceilings.
C636-9 1 (Current Issue)	Recommended Practice for Installation of Metal Suspension System for Acoustical Tile and Lay-In Panels

American National Standards Institute (ANSI) Publications

B16.18 (Current Issue)	Cast Bronze Solder Joint Pressure Fittings
B16.22 (Current Issue)	Wrought Copper and Bronze Solder Joint Pressure Fittings
B31.1 (Current Issue)	Power Piping
EIA RS-3 10	Racks, Panels, and Associated Equipment
Y32.16-1975	IEEE Standard Reference Designations for Electrical and Electronics Parts and Equipment
TIA/EIA-568-A	Commercial Building Telecommunications Wiring Standard.
TIA/EIA TSB-67	Performance Specification for Testing UTP Cabling Systems

National Fire Protection Association (NFPA) Standards

NFPA 13 (Current Issue)	Standard for the Installation of Sprinkler Systems

NFPA 14 ..... Installation of Standpipe and Hose Systems
(Current Issue)

NFPA 70 ..... National Electrical Code
(Current Issue)

NFPA 72 ..... National Fire Alarm Code
(Current Issue)

NFPA 75 ..... Electronic Computer/Data Processing
(Current Issue) Equipment

NFPA 90A ..... Installation of Air Conditioning and
(Current Issue) Ventilating Systems

NFPA 101 ..... Life Safety Code
(Current Issue)

International Conference of Building Officials

ICBO ..... Uniform Mechanical Code
(Current Issue)

Occupational Safety and Health Administration (OSHA) Publications

All current OSHA standards.

Section B-Reference Documents Listing.

The following documents are referenced for the convenience of the user of this document. The documents do not form a part of this document and are not made applicable by their reference herein.

50 SW1 33-113 ..... Installation/Modification Authorization
(Current Issue) and Scheduling Process (50 SW Form 19)

50 SW1 33-114 ..... Cable Management
(Current Issue)

MIL-HDBK- 1190 ..... Facility Planning and Design Guide
(Current Issue)

Section C-Acronym and Definition List.

This section lists commonly used acronyms.

AC - Alternating Current or Air Conditioner/ing
AF - Air Force
AFB - Air Force Base
AFCSC - Air Force Cryptologic Support Center
AFI - Air Force Instruction
AFM - Air Force Manual
AFNCC - Air Force Network Control Center
AFSSI - Air Force Systems Security Instruction
AFSSM - Air Force Systems Security Manual
a.k.a - Also Known As
AMP - Ampere
ANSI - American National Standards Institute
APO - Air Power Off
ASTM - American Society for Testing and Material
AWG - American Wire Gauge
BCE - Base Civil Engineering
BF - Black Fiber Optic
BM - Black Metallic
CAT - Category
CES - Civil Engineering Squadron
CF - Compression Fittings
Cfm - Cubic Feet per Minute
CFR - Code of Federal Regulations
CP - Conduit Penetration
CRAC - Computer Room Air Conditioner
CSOC - Consolidated Space Operations Center
CTS - Colorado Tracking Station
DASD - Direct Access Storage Device
DB - Dry Bulb
db - Decibel
DC - Direct Current
DCS - Defense Communications System
DoD - Department of Defense
E&A - Engineering and Administration
ECF - Entry Control Facility
EERD - End Equipment Reference Designator
EGP - Equipotential Grounding Plane
EIA - Electronic Industries Association
ELFEXT - Equal-Level, Far-End Cross Talk
EMC - Electromagnetic Compatibility

EM1 - Electromagnetic Interference
EMT - Electrical Metallic Tubing
EPG - Equipotential Ground
EPO - Emergency Power Off
ERD - Equipment Reference Designator
ERO - Emergency Refrigeration Off
F - Fahrenheit
FIS - Facility Installation Standards
Ft - Foot/Feet
HVAC - Heating Ventilation and Air Conditioning
Hz - Hertz
IAW - In Accordance With
ICBO - International Conference of Building Officials
ID - Identification or Inner Diameter
i.e - For Example
IEEE - Institute of Electrical and Electronics Engineers
In - inch
IT - Information Technology
JNTF - Joint National Test Facility
Km - Kilometer
LAN - Local Area Network
LG - Logistics Group
LSS - Logistics Support Squadron
M - Meter
MCT - Multi-Cable Transit
Mm - Millimeter
MOA - Memorandum Of Agreement
NACSEM - National Communications Security/Emanation Security Information Memorandum
NACSIM - National Communications Security Information Memorandum
NEC - National Electrical Code
NEXT - Near-End Cross Talk
NFPA - National Fire Protection Association
Nm - Nanometer
OD - Outside Diameter
OMRT - Operations and Maintenance Responsibility Transfer
OPR - Office of Primary Responsibility
OPS - Operations
OSHA - Occupational Safety and Health Administration
OSS - Operations Support Squadron
OT&E - Operational Test and Evaluation
OTDR - Optical Time Domain Reflectometer
P&E - Pavement & Equipment
PDS - Protected Distribution System

PDU - Power Distribution Unit
POC - Point of Contact
Psf - pounds per square foot
Psi - pounds per square inch
Psig - pounds per square inch gauge
RF - Radio Frequency or Red Fiber Optic
RH - Relative Humidity
RM - Red Metallic
RMS - Root-Mean-Square
SAFB - Schriever Air Force Base
SATAF - Site Activation Task Force
SEGP - Single Earth Ground Point
SERD - Start Equipment Reference Designator
SIASC - Site Integration And Support Contract
SIASC Contractor - Contractor responsible for site integration and support
SOC - Satellite Operations Complex
Sq Ft - Square Foot
SSB - Site Support Building
ST&E - Security Test and Evaluation
STL - Schriever Technical Library
SW - Space Wing
TAID - Technical Area Integration Drawing
TCF - Technical Control Facility
TEMPEST - Study of compromising emanations (not an acronym)
TO - Technical Order
TPS - Technical Power System
TSPS - Technical Support Power System
TS/SA - Top Secret/Special Access
UL - Underwriters Laboratories, Inc.
UPS - Uninterruptible Power System
V - Volts

Attachment 2

REFERENCE NUMBERING SYSTEM

Section A-Cable Number.

A2.1. A cable is a bound or sheathed group of individually insulated conductors, either metallic or fiber optic identified with a cable number. The cable number is the unique number used to identify a cable connecting between two (and only two) equipment items. All cables shall be identified as outlined below.

A2.1.1. The CABLE NUMBER shall be constructed as follows:

W XnnnnX

Sequence Code

Commodity Code "W" (cable)

A2.1.2. The first character (COMMODITY CODE) of the cable number is always "W," for WIRE. The second through sixth characters are the SEQUENCE ELEMENT, consisting of a single capital letter followed by four digits to uniquely designate a single cable. A seventh character shall be added, either "T" or "S" to designate temporary or spare. This requirement shall also apply to all conductors in a cable when they are "fanned out" within an assembly, and shall include all spare conductors, which shall be identified by the word "spare" in place of the specific sub-assembly/connector identification.

A2.1.3. The following example illustrates a TYPICAL CABLE NUMBER:

W A7351

Sequence Code from block assigned to LOCKMART

Wire (cable)

Section B-Equipment Reference Number.

A2.2. All equipment identified by 2.5 .5 shall be given a unique EQUIPMENT REFERENCE NUMBER consisting of the facility (building) number, module number, room number, and station (equipment) number. This number shall appear, in full, on all installed equipment. The equipment reference designator shall be controlled and issued by Site Integration Office TAIDS personnel. Exceptions must be approved by the Site Integration Office.

A2.2.1. The EQUIPMENT REFERENCE NUMBER shall be constructed as follows. Any changes must be coordinated with Site Integration Office TAIDS and fully documented.

XXXX-XXX/XXX-XXX

- Station (equipment) number
- Room number
- Module number
- Facility number

A2.2.2. The FACILITY NUMBER is the four-character designator assigned to each facility as recorded on the approved site plan. Presently assigned facility codes are listed in Section C.

A2.2.3. The MODULE NUMBER is the three-character designator assigned to each module on the approved Operations building floor plans. For other facilities with no designated module numbers, these three positions shall contain "000."

A2.2.4. The ROOM NUMBER is the three-character designator assigned to each room of a facility, as shown on the approved floor plans. Where no room number is assigned within an Operations building module, or where a facility contains only one room, these three positions shall contain "00 1."

A2.2.5. The STATION (EQUIPMENT) NUMBER is the three-character location designator assigned to each item of equipment in a room or module. The station (equipment) number is taken from existing equipment on the TAIDS drawings. For new installations equipment numbers shall be obtained per paragraph A2.2. The station (equipment) number MUST appear in all equipment reference designations.

A2.2.6. The following example illustrates a TYPICAL EQUIPMENT REFERENCE NUMBER:

0400-17B/ 002- 101

- Station (equipment) number 101
- Room 2 in Module 17B
- Module 17B
- Building 0400 (0ps)

Section C-Identification Tag Size and Placement.

A2.3. Reference AF TO 3 l-l0-27 for identification tag sizing and placement.

SECTION D-SAFB FACILITIES UNDER CONFIGURATION MANAGEMENT

FACILITY NUMBER	ROOM/MODFACILITY NUMBER	NAME
0300	101	Engineering & Administration Building (E&A)
0301	106	Administration Building
0301	206	Administration Building
0301	206	
0301	306	
0400	All Modules, Cable Chase, And Roof	Jack Swigert Operations Building (OPS)
0612	All	DOMSAT Interface Building
0615	All	USN0 Satellite Terminal Building
0700	All	SATCOM Compound, except Bldg 702
0715	All	50th Communications Squadron Building
3001		Utilidor, E&A to Main
3005		Utilidor, Main North
3006		Utilidor, CP to Main
3007		Utilidor, South to Main
3008		Utilidor, OPS to Main
5032	All	LMR Building
N/A	All	Communications Manholes/Handholes

Attachment 3

COMMUNICATIONS CIRCUIT DESIGN AND INSTALLATION REQUIREMENTS

Section A-Introduction.

A3.1. Purpose. This attachment identifies configuration requirements for the design and installation of communications circuits at SAFB. These requirements are established to prevent configuration degradation and ensure uniform operation, maintenance and troubleshooting procedures can be developed for new communications circuits installed. In particular, these standards are intended to ensure that the configuration of new circuit installations are consistent.

A3.1.1. Scope. These requirements apply to contractor and government organizations that design or install new communications circuits on SAFB.

Section B-Rack Elevation Standard.

A3.2.1. Purpose. To establish a Rack Elevation Standard for SAFB.

A3.2.2. Using EIA standard RS-3 10 and IEEE Standard 200-1975 as references, this rack elevation standard affects all new rack installations and modifications to existing racks.

A3.2.3. Has no other effect on existing racks.

A3.2.4. Rack levels shall be numbered sequentially, beginning with Level Al at the top of the rack.

A3.2.5. Each level is 1.75 inches in height.

A3.2.6. Equipment is assigned a level based upon the location of its upper edge (see Figure A3-1).

A3.2.7. Rear of equipment racks shall be identified in the same manner except “B” shall we used in place of “A”.

Section C-Facility Reservation Requests.

A3.3.1. Purpose. To establish a “one stop” process to reserve floorspace for new rack/station installations, equipment additions to existing rack/stations for the purpose of updating the power panel schedule.

A3.3.2. Detailed instructions for use are on the reverse side of the Facility Reservation Request Form (see Figure A3-2).

A3.3.3. All requests shall be forwarded to SIASC Technical Area Integration Drawing Section (TAIDS) for coordination.

A3.3.4. Requests must be approved by the Site Integration Office.

Section D-Fiber Optic Cable Testing.

A3.4. ANSI/TIA/EIA 568A.

A3.4.1. Link Segment Performance.

A3.4.1.1. The single performance parameter necessary for performance testing, when installing components compliant with this standard, is link attenuation. Bandwidth (62.5/125 m) and dispersion (single-mode) are important performance parameters, but because they can not be adversely affected by installation practices, they should be tested by the fiber manufacturer and do not require testing in the field.

A3.4.1.2. The acceptable link attenuation for a 62.5/125 mm horizontal optical fiber cabling system is based on the maximum 90 m (295 ft) distance. The link attenuation equation in H.3.3 is provided to determine "acceptable link performance" for 62.5/125 m and single-mode backbone cabling systems. This equation calculates link attenuation for backbone link segments based upon fiber type, cable type, wavelength, link distance and number of splices.

A3.4.1.3. Link attenuation has been based on the connectivity requirements of this standard and the use of the One Reference Jumper Method specified by ANSI/TIA/EIA-526-14A, Method B and ANSI/TIA/EIA-526-7, Method A. 1. The user should follow the procedures established by these standards to accurately conduct performance testing.

A3.4.1.4. Link attenuation does not include any active devices or passive devices other than cable, connectors, and splices (i.e., link attenuation does not include such devices as optical bypass switches, couplers, repeaters, or optical amplifiers).

A3.4.2. Horizontal Link Measurement.

A3.4.2.1. The horizontal optical fiber cabling link segments need to be tested at only one (1) wavelength. Because of the short length of cabling [90 m (295 ft) or less], attenuation deltas due to wavelength are insignificant. The horizontal link should be tested at 850 nm or 1300 nm in one direction in accordance with ANS/IEIA/TIA-526-14A, Method B, One Reference Jumper. The attenuation test results should be less than 2.0 dB. This value is based on the loss of two (2) connector pairs, one (1) pair at the telecommunications outlet/connector and one (1) pair at the horizontal cross-connect, plus 90 m (295 ft) of optical fiber cable.

Note: Link attenuation has been based upon the use of a light source categorized by a Coupled Power Ratio (CPR) of Category 2, Underfilled, per Annex B of ANSI/EIA/TIA-

526-14A. The use of a light source categorized as Category 1, Overfilled, may provide results higher than the 2.0 dB. The user is advised to consult ANSI/EIA/TIA-526-14A specifically Annex B and C, for further information concerning the affects of Modal Power Distribution (MPD) and CPR.

A3.4.3. Backbone Link Measurement.

A3.4.3.1. The backbone optical fiber cabling link segment should be tested in one direction at both operating wavelengths to account for attenuation deltas associated with wavelength. Single-mode backbone links should be tested at 13 10 nm and 1550 nm in accordance with ANSI/TIA./EIA-526-7, Method A. 1, One Reference Jumper. 62.5/125 mm backbone links should be tested at 850 nm and 1300 nm in accordance with ANSI/EIA/TIA-526-14A, Method A. 1, One Reference Jumper. Because backbone length and the potential number of splices vary depending upon site conditions, the link attenuation equation should be used to determine acceptance values based upon this standard's component requirement at each of the applicable wavelengths.

A3.4.4. Link Attenuation Equation and Graphs.

A.3.4.4.1. Link attenuation is calculated as:

Link Attenuation = Cable Attn + Connector Attn + Splice Attn

Cable Attn (dB) = Attenuation Coefficient (dB/km) * Length (km)

Attenuation Coefficient:

3.75 dB/km @ 850 nm for 62.5/125 mm
1.5 dB/km @ 1300 nm for 62.5/125 mm
0.5 dB/km @ 13 10 nm for single-mode outside plant cable
0.5 dB/km @ 1550 nm for single-mode outside plant cable
1 .O dB/km @ 13 10 nm for single-mode inside plant cable
1 .O dB/km @ 1550 nm for single-mode inside plant cable

Connector Attn (dB) = number of connector pairs * connector loss (dB)
= 2 * 0.75 dB = 1.5 dB

Splice Attn (dB) = number of splices (S) * splice loss (dB)
= S * 0.3 dB

A.3.4.4.2. Acceptance based on cable type (i.e., outside plant or inside plant), distance, and two connector pairs. The graph does not account for any splice loss. If the link contains splices, add 0.3 dB for each splice in the link. If the link consists of both inside and outside plant cables, then the equation should be used based on the length of each of the cable types.

Power Budget:

Light Source:	Laser
Fiber Type:	SM

Operating Wavelength:	1550 nm
Average Transmitter Output:	-5dB (Includes 10dB Optical Amplifier)
Receiver Sensitivity (1 0^{-9} BER)	-42dB

System Gain:

Transmitter Average Power	-5 dB
- Receiver Sensitivity	-42 dB
System Gain	37 dB

Power Penalties:

Operating Margin	2 dB
Repair Margin 2 Fusion Splices @.3dB	.6dB
Total	2.6dB

Link Loss Budget:

System Gain	3 7 dB
Power Penalties	-2.6 dB
Link Loss Budget	34.4dB

Path Calculations:

Connection loss (8 ST @.7dB per mated pair)	5.6 dB
Splice loss (7 Fusion @.15 dB)	1.05 dB
OSP cable (102.201 Km. @.25 dB/Km @ 155Onm) loss	25.55 dB
Path loss	32.2 dB

Information:

Optical Cable

At 850 nm - 3.75 dB per km

At 1300 nm - 1.5 dB per km

Connectors

Typical loss of between 0.35 and 0.75 dB per connector pair

Splice

Less than 0.5 dB per splice

Figure A3-1. Typical Rack Elevation (Front).

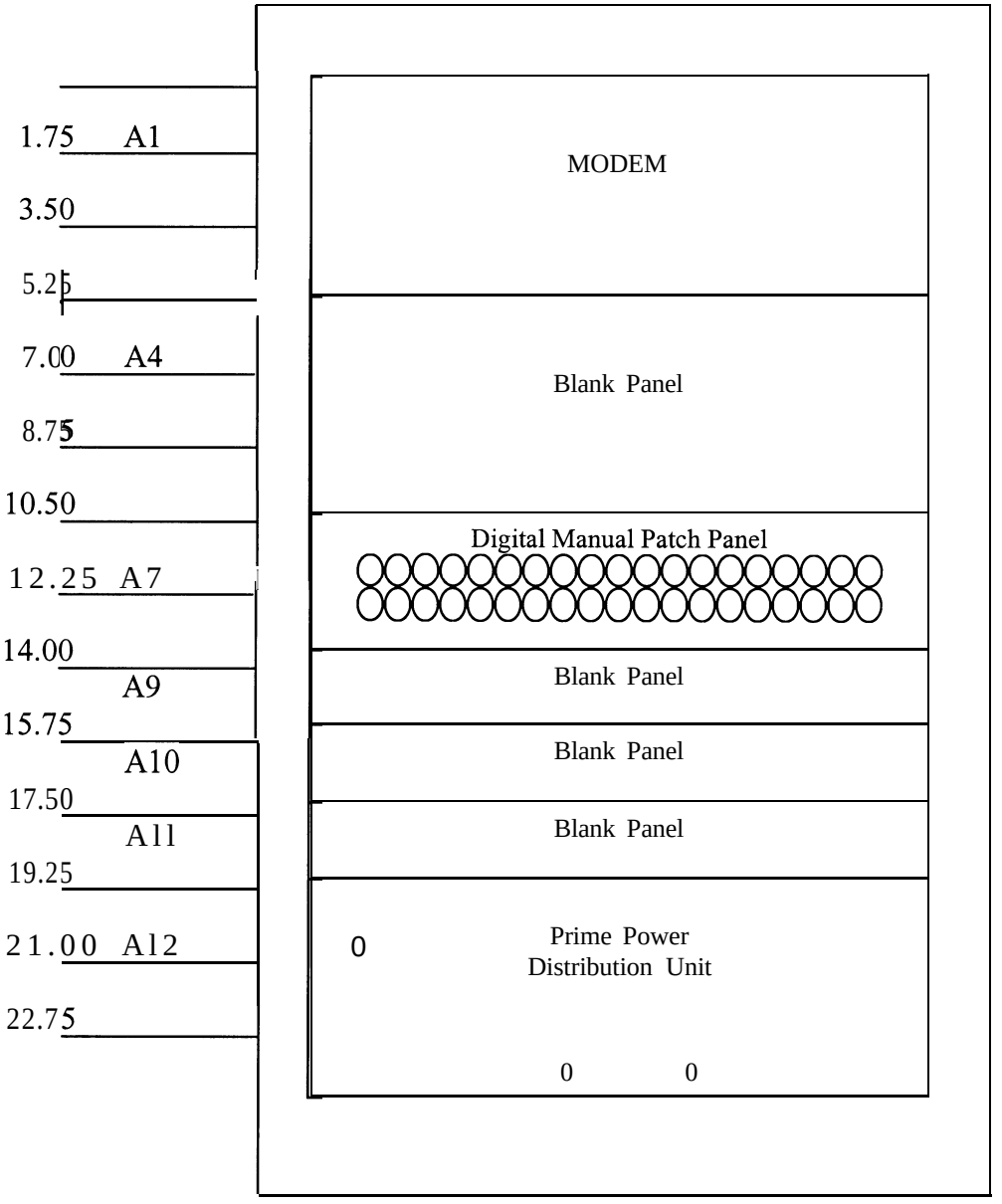

ATTACHMENT NO. 7

RFP Drawings
(Included under separate cover)

D1.01	**COVER**
D2.01	**INDEX**
D3.02	**LEGEND**
D4.03	**ELECTRICAL LEGEND**
D5.04	**ABBREVIATIONS**
C1.00	**VICINITY/LOCATION PLAN**
C1.01	**SITE SURVEY PLAN**
C1.02	**FREE ZONE FENCE PLAN**
C2.01	**SITE SURVEY/REMOVAL PLAN**
C3.01	**SITE PLAN**
C3.02	**BASIC LANDSCAPE PLAN**
C4.01	**GRADING PLAN**
EU.01	**COMPOSITE UTILITY PLAN**
G1.00	**SOIL BORING LOGS AND LOCATION PLAN**
A1.01	**FIRST FLOOR PLAN**
A1.02	**SECOND FLOOR PLAN**
A1.03	**OPTIONAL CRAWL SPACE FLOOR**
A2.01	**BUILDING AND WALL SECTIONS**
A3.01	**ROOF PLAN**
A4.01	**NORTH AND SOUTH ELEVATIONS**
A4.02	**EAST AND WEST ELEVATIONS**
A6.01	**ROOM FINISH SCHEDULE**

A6.02 DOOR SCHEDULE
i1.01 FURNITURE FOOTPRINT FIRST FLOOR
i1.02 FURNITURE FOOTPRINT SECOND FLOOR