SPECIFICATIONS
(FOR CONSTRUCTION CONTRACT)

Solicitation No. DACA45-02-B-0008

Consolidated Lodging Facility Phase III

Minneapolis St. Paul – International Airport
Air Force Reserve Station, MN

February 2002

US Army Corps of Engineers
Omaha District

Consolidated Lodging Facility
Phase III
Minneapolis St Paul - International Airport
Air Force Reserve Station, MN

PROJECT TABLE OF CONTENTS

CONTRACT REQUIREMENTS

00010 Solicitation, Offer and Award (SF-1442)
00100 Instructions, Conditions & Notices to Bidders
00600 Representations, Certifications & Other Statements of Bidders
00700 Contract Clauses
00800 Special Contract Requirements

DIVISION 01 - GENERAL REQUIREMENTS

01030 BID OPTIONS
01040 AS-BUILT DRAWINGS
01090 SOURCES FOR REFERENCE PUBLICATIONS
01200 WARRANTY OF CONSTRUCTION
01330 SUBMITTAL PROCEDURES
01400 SPECIAL SAFETY REQUIREMENTS FOR DEMOLITION AND RENOVATION
01410 ENVIRONMENT PROTECTION
01451 CONTRACTOR QUALITY CONTROL
01500 TEMPORARY CONSTRUCTION FACILITIES

DIVISION 02 - SITE WORK

02230 CLEARING AND GRUBBING
02300 EARTHWORK
02315 EXCAVATION, FILLING AND BACKFILLING FOR BUILDINGS
02316 EXCAVATION, TRENCHING, AND BACKFILLING FOR UTILITIES SYSTEMS
02510 WATER DISTRIBUTION SYSTEM
02531 SANITARY SEWERS
02621 FOUNDATION DRAINAGE SYSTEM
02630 STORM-DRAINAGE SYSTEM
02722 AGGREGATE AND/OR GRADED-CRUSHED AGGREGATE BASE COURSE
02741 BITUMINOUS PAVING FOR ROADS, STREETS AND OPEN STORAGE AREAS
02748 BITUMINOUS TACK COAT
02763 PAVEMENT MARKINGS
02770 CONCRETE SIDEWALKS AND CURBS AND GUTTERS
02811 UNDERGROUND SPRINKLER SYSTEMS
02921 SEEDING
02922 SODDING
02930 EXTERIOR PLANTING

DIVISION 03 - CONCRETE

03101 STRUCTURAL CONCRETE FORMWORK
03150 EXPANSION JOINTS AND CONTRACTION JOINTS
03200 CONCRETE REINFORCEMENT
03300 CAST-IN-PLACE STRUCTURAL CONCRETE
03410 PRECAST/PRESTRESSED CONCRETE FLOOR AND ROOF UNITS

03413 PRECAST ARCHITECTURAL CONCRETE

DIVISION 04 - MASONRY

04200 MASONRY
04220 NONBEARING MASONRY VENEER/STEEL STUD WALLS

DIVISION 05 - METALS

05120 STRUCTURAL STEEL
05300 STEEL DECKING
05400 COLD-FORMED STEEL FRAMING
05500 MISCELLANEOUS METAL

DIVISION 06 - WOODS & PLASTICS

06100 ROUGH CARPENTRY
06200 FINISH CARPENTRY

DIVISION 07 - THERMAL & MOISTURE PROTECTION

07110 BITUMINOUS DAMPPROOFING
07131 ELASTOMERIC MEMBRANE WATERPROOFING
07220 ROOF INSULATION
07413 METAL SIDING
07421 COMPOSITE METAL BUILDING PANELS
07530 ELASTOMERIC ROOFING (EPDM)
07600 SHEET METALWORK, GENERAL
07720 ROOF ACCESSORIES
07810 SPRAY-APPLIED FIREPROOFING
07840 FIRESTOPPING
07900 JOINT SEALING

DIVISION 08 - DOORS & WINDOWS

08110 STEEL DOORS AND FRAMES
08120 ALUMINUM STOREFRONT AND ENTRANCES
08210 WOOD DOORS
08330 OVERHEAD ROLLING DOORS
08520 ALUMINUM WINDOWS
08700 BUILDERS' HARDWARE
08810 GLASS AND GLAZING

DIVISION 09 - FINISHES

09250 GYPSUM WALLBOARD
09310 CERAMIC TILE
09510 ACOUSTICAL CEILINGS
09650 RESILIENT FLOORING
09680 CARPET
09900 PAINTING, GENERAL
09915 COLOR SCHEDULE

DIVISION 10 - SPECIALTIES

10214 EXTERIOR LOUVERS
10260 WALL AND CORNER PROTECTION
10440 INTERIOR SIGNAGE
10522 FIRE EXTINGUISHERS, CABINETS AND ACCESSORIES
10800 TOILET ACCESSORIES

DIVISION 12 - FURNISHINGS

12490 WINDOW TREATMENT

DIVISION 13 - SPECIAL CONSTRUCTION

13110 CATHODIC PROTECTION SYSTEM (SACRIFICIAL ANODE)
13851 FIRE DETECTION AND ALARM SYSTEM, ADDRESSABLE
13930 WET PIPE SPRINKLER SYSTEM, FIRE PROTECTION

DIVISION 14 - CONVEYING SYSTEMS

14240 ELEVATORS, HYDRAULIC

DIVISION 15 - MECHANICAL

15080 THERMAL INSULATION FOR MECHANICAL SYSTEMS
15190 GAS PIPING SYSTEMS
15400 PLUMBING, GENERAL PURPOSE
15450 PLUMBING EQUIPMENT
15455 PLUMBING PUMPS
15485 PLUMBING SEQUENCE OF OPERATION
15556 FORCED HOT WATER HEATING SYSTEMS
15653 AIR-CONDITIONING SYSTEM (UNITARY TYPE)
15895 AIR SUPPLY, DISTRIBUTION, VENTILATION, AND EXHAUST SYSTEM
15950 HVAC SEQUENCE OF OPERATION
15951 DIRECT DIGITAL CONTROL FOR HVAC
15990 TESTING, ADJUSTING, AND BALANCING OF HVAC SYSTEMS
15995 COMMISSIONING OF HVAC SYSTEMS

DIVISION 16 - ELECTRICAL

16120 INSULATED WIRE AND CABLE
16375 ELECTRICAL DISTRIBUTION SYSTEM, UNDERGROUND
16403 SWITCHBOARDS AND PANELBOARDS
16415 ELECTRICAL WORK, INTERIOR
16485 VARIABLE FREQUENCY DRIVE
16528 EXTERIOR LIGHTING INCLUDING SECURITY AND CCTV APPLICATIONS
16536 EMERGENCY BATTERY INVERTER SYSTEM
16710 PREMISES DISTRIBUTION SYSTEM
16711 TELEPHONE SYSTEM, OUTSIDE PLANT

-- End of Project Table of Contents --

SOLICITATION, OFFER, AND AWARD (Construction, Alteration, or Repair)	1. SOLICITATION NO.	2. TYPE OF SOLICITATION	3. DATE ISSUED	PAGE OF PAGES
	DACA45-02-B-0008	☒ SEALED BID (IFB) ☐ NEGOTIATED (RFP)	25 FEB 2002	1 OF 3

IMPORTANT - The "offer" section on the reverse must be fully completed by offeror.

4. CONTRACT NO.	5. REQUISITION/PURCHASE REQUEST NO.	6. PROJECT NO.

7. ISSUED BY CODE CT

U S ARMY ENGINEER DISTRICT, OMAHA
106 South 15th Street
Omaha, Nebraska 68102-1618

8. ADDRESS OFFER TO

U.S.ARMY CORPS OF ENGINEERS, OMAHA
Attn: CONTRACTING DIVISION (CENWO-CT)
106 South 15th Street
Omaha, Nebraska 68102-1618

9. FOR INFORMATION CALL: ▶	A. NAME	B. TELEPHONE NO. (Include area code) (NO COLLECT CALLS)
	See SECTION 00100, Para. 25	See SECTION 00100, Para. 25

SOLICITATION

NOTE: In sealed bid solicitations "offer" and "offeror" mean "bid" and "bidder".

10. THE GOVERNMENT REQUIRES PERFORMANCE OF THE WORK DESCRIBED IN THESE DOCUMENTS (Title, identifying no., date):

The Offeror hereby agrees to do all the work described in these documents entitled:

Consolidated Lodging Facility, Phase III
Minneapolis St. Paul - International Airport Air Force Reserve Station, MN

RETURN WITH BIDS: SECTION 00010 (SF1442), SECTION 00600 REPRESENTATIONS, CERTIFICATIONS & OTHER STATEMENTS OF BIDDERS, and all Bonding Requirements, See SECTION 00700 CONTRACT CLAUSES and SECTION 00100 for Performance and Payment Bonds.

11. The Contractor shall begin performance within 10 calendar days and complete it within 420 calendar days after receiving

☐ award, ☒ notice to proceed. This performance period is ☒ mandatory, ☐ negotiable. (See _____.)

12A. THE CONTRACTOR MUST FURNISH ANY REQUIRED PERFORMANCE AND PAYMENT BONDS? (If "YES," indicate within how many calendar days after award in Item 12B.)	12B. CALENDAR DAYS
☒ YES ☐ NO	10

13. ADDITIONAL SOLICITATION REQUIREMENTS:

A. Sealed offers in original and 0 copies to perform the work required are due at the place specified in Item 8 by 2:00 pm (hour) local time 28 Mar 2002 (date). If this is a sealed bid solicitation, offers must be publicly opened at that time. Sealed envelopes containing offers shall be marked to show the offeror's name and address, the solicitation number, and the date and time offers are due.

B. An offer guarantee ☒ is, ☐ is not required.

C. All offers are subject to the (1) work requirements, and (2) other provisions and clauses incorporated in the solicitation in full text or by reference.

D. Offers providing less than 60 calendar days for Government acceptance after the date offers are due will not be considered and will be rejected.

14. NAME AND ADDRESS OF OFFEROR (Include ZIP Code)	15. TELEPHONE NO. (Include area code)
DUNS Number:	16. REMITTANCE ADDRESS (Include only if different than Item 14)
CODE FACILITY CODE	

17. The offeror agrees to perform the work required at the prices specified below in strict accordance with the terms of this solicitation, if this offer is accepted by the Government in writing within 60 calendar days after the date offers are due. (Insert any number equal to or greater than the minimum requirement stated in Item 13D. Failure to insert any number means the offeror accepts the minimum in Item 13D.)

AMOUNTS ▶

See Attached Bidding Schedule

Contractor's Fax No._____ CAGE CODE _____

Contractor's E-Mail address_____

18. The offeror agrees to furnish any required performance and payment bonds.

19. ACKNOWLEDGMENT OF AMENDMENTS

(The offeror acknowledges receipt of amendments to the solicitation - give number and date of each)

AMENDMENT NO.										
DATE										

20A. NAME AND TITLE OF PERSON AUTHORIZED TO SIGN OFFER (Type or print)	20B. SIGNATURE	20C. OFFER DATE

AWARD (To be completed by Government)

21. ITEMS ACCEPTED:

22. AMOUNT	23. ACCOUNTING AND APPROPRIATION DATA

24. SUBMIT INVOICES TO ADDRESS SHOWN IN (4 copies unless otherwise specified) ▶	ITEM 26	25. OTHER THAN FULL AND OPEN COMPETITION PURSUANT TO ☐ 10 U.S.C. 2304(c) ( ) ☐ 41 U.S.C. 253(c) ( )

26. ADMINISTERED BY CODE	27. PAYMENT WILL BE MADE BY
U.S. Army Engineer District, Omaha 106 South 15th Street Omaha, Nebraska 68102-1618	USAED Omaha c/o USACE Finance Center 5722 Integrity Drive Millington, TN 38054-5005

CONTRACTING OFFICER WILL COMPLETE ITEM 28 OR 29 AS APPLICABLE

☐ 28. NEGOTIATED AGREEMENT (contractor is required to sign this document and return_____ copies to issuing office.) Contractor agrees to furnish and deliver all items or perform all work, requisitions identified on this form and any continuation sheets for the consideration stated in this contract. The rights and obligations of the parties to this contract shall be governed by (a) this contract award, (b) the solicitation, and (c) the clauses, representations, certifications, and specifications incorporated by reference in or attached to this contract.

☐ 29. AWARD (Contractor is not required to sign this document.) Your offer on this solicitation, is hereby accepted as to the items listed. This award consummates the contract, which consists of (a) the Government solicitation and your offer, and (b) this contract award. No further contractual document is necessary.

30A. NAME AND TITLE OF CONTRACTOR OR PERSON AUTHORIZED TO SIGN (Type or print)		31A. NAME OF CONTRACTING OFFICER (Type or print)	
30B. SIGNATURE	30C. DATE	31B. UNITED STATES OF AMERICA BY	31C. AWARD DATE

STANDARD FORM 1442 BACK (REV. 4-85)

BIDDING SCHEDULE

Item No.	Description	Quantity	Unit	Amount
	BASIC			
1.	Entire work complete excluding options below.	Job	L.S.	$_____
	OPTIONS			
O-1	North Parking Lot Addition (Sitework)	Job	L.S.	$_____
O-2	Landscaping for Southwest and Southeast Courtyard (Sitework)	Job	L.S.	$_____
O-3	Landscaping for Eastern Portion of Site (Sitework)	Job	L.S.	$_____
O-4	Landscaping for Western Portion of Site (Sitework)	Job	L.S.	$_____
O-5	Excavation Under future Phase Four Footprint (Sitework)	Job	L.S.	$_____
O-6	Interior Finishing of four First Floor Guestrooms (Phase Three)	Job	L.S.	$_____
O-7	Interior Finishing of six Second Floor Guestrooms (Phase Three)	Job	L.S.	$_____
O-8	Interior Finishing of six Third Floor Guestrooms (Phase Three)	Job	L.S.	$_____
O-9	Interior Finishing of six Fourth Floor Guestrooms (Phase Three)	Job	L.S.	$_____
O-10	Interior Finishing of twelve Second Floor Guestrooms in Phase One	Job	L.S.	$_____

TOTAL AMOUNT (BASIC + OPTIONS) $_____
(in figures)

Notes:

1. See SECTION 00100, INSTRUCTIONS, CONDITIONS, & NOTICES TO BIDDERS for evaluation of options. The Government reserves the right to exercise the options within 90 days after issuance of Notice to Proceed.

2. Bid prices must be entered for all items of the schedule. Total amount bids submitted without bid prices being entered on individual items will be rejected. Additions will be subject to verification by the Government. In case of variation between the lump-sum prices and the total amount, the lump-sum prices will be considered the bid.

3. A modification to a bid which provides for a single adjustment to the total amount bid, should state the application of the adjustment to each respective lump-sum price affected. If the modification is not so apportioned, the single adjustment will be applied to Item No. 1.

4. See Section 01030 BID OPTIONS for descriptions of the bid items.

SECTION 00100

INSTRUCTIONS, CONDITIONS & NOTICES TO BIDDERS
(July 2000, Revised February 2002)

INDEX

Attachments: Required Central Contractor Registration

1 GENERAL BIDDING INFORMATION
2 (FAR 52.214-6) EXPLANATION TO PROSPECTIVE BIDDERS (APRIL 1984).
3 (FAR 52.214-1) SOLICITATION DEFINITIONS - SEALED BIDDING (JULY 1987).
4 (FAR 52.214-5) SUBMISSION OF BIDS (MAR 1997).
5 (FAR 52.214-18) PREPARATION OF BIDS - CONSTRUCTION (APRIL 1984).
6 (FAR 52.214-4) FALSE STATEMENTS IN BIDS (APRIL 1984).
7 (FAR 52.214-7) LATE SUBMISSIONS, MODIFICATIONS, AND WITHDRAWALS OF BIDS (NOV 1999).
8 INFORMATION FOR MODIFYING BIDS.
9 BID GUARANTEE.
10 PERFORMANCE AND PAYMENT BONDS.
11 (FAR 52.214-19) CONTRACT AWARD - SEALED BIDDING - CONSTRUCTION (AUG 1996).
12 NORTH AMERICAN CLASSIFICATION SYSTEM (NAICS).
13 SMALL BUSINESS SIZE STANDARD.
14 (FAR 52.214-3) AMENDMENTS TO INVITATIONS FOR BIDS (DECEMBER 1989).
15 CHANGES PRIOR TO OPENING BIDS.
16 (FAR 52.214-34) SUBMISSION OF OFFERS IN THE ENGLISH LANGUAGE (APR 1991)
17 (FAR 52.214-35) SUBMISSION OF OFFERS IN U.S. CURRENCY (APR 1991)
18 (EFARS 52.214-5000) ARITHMETIC DISCREPANCIES.
19 (FAR 52.217-5) EVALUATION OF OPTIONS (JUL 1990).
20 OPTIONS.
21 AVAILABILITY OF SPECIFICATIONS, STANDARDS, AND DESCRIPTIONS.
22 AVAILABLE PLANT.
23 EQUIPMENT OWNERSHIP AND OPERATING EXPENSE SCHEDULE.
24 NOTICE REGARDING BUY AMERICAN ACT.
25 (FAR 52.236-27) SITE VISIT (CONSTRUCTION) (FEB 1995).
26 BIDDER'S QUESTIONS AND COMMENTS.
27 (FAR 52.233-2) SERVICE OF PROTEST (AUG 1996).
28 PRE-AWARD SURVEY INFORMATION (Local Provision) (Sep 93)
29 (FAR 52.204-6) DATA UNIVERSAL NUMBERING SYSTEM (DUNS) NUMBER (JUNE 1999)
30 (FAR 52.216-1) TYPE OF CONTRACT (APR 1984).
31 SUBCONTRACTING PLAN/SUBCONTRACTING GOALS REGARDING THE UTILIZATION OF SMALL BUSINESS CONCERNS.
32 (DFARS 252.204-7004) REQUIRED CENTRAL CONTRACTOR REGISTRATION (NOV 2001)

SECTION 00100

INSTRUCTIONS, CONDITIONS & NOTICES TO BIDDERS

1 GENERAL BIDDING INFORMATION

Bids shall be either mailed or hand-carried as indicated below. Bid will be PUBLICLY opened at the bid time indicated on Standard Form SF 1442 (Page 00010-1).

1.1 MAILED BIDS AND HAND-CARRIED BIDS

Mailed bids shall be addressed to the location as indicated on Standard Form SF 1442 (Page 00010-1), Item No. 8.

Due to heightened security at Government installations, those bidders who have their bids hand-carried shall contact Loreen Blume, Contract Specialist at (402) 221-4265 or (402) 221-4100 prior to delivering to the U. S. Army Corps of Engineer District, Omaha, 106 South 15th Street, Omaha, NE.

On the date specified and for thirty (30) minutes prior to time specified on Standard Form SF 1442, Page 00010-1, item 13.A, a Contracting representative will be in the lobby to accept bids. At the time specified on Standard SF 1442 Page 00010-1, item 13.A, the designated bid opening official will announce that receipt of bids is closed. Official time will be established by clock located in the area where bids are received.

Anyone wishing to attend this public opening will be required to present photo identification to sign in and then will be escorted to the facility where bids will be opened. Once bids have been opened, read and recorded, attendees will then be escorted to exit the building.

1.2 SOLICITATION RESTRICTIONS

This solicitation is unrestricted and open to both large and small business participation.

1.3 BASIS FOR AWARD.

IT IS INTENDED THAT AWARD WILL BE MADE TO ONE BIDDER FOR THE ENTIRE WORK.

1.4 DESCRIPTION OF WORK

The scope of this project is to furnish all plant, labor, materials, and equipment and performing all work for the construction of a four story wing on the Consolidated Lodging Facility. Work shall be in accordance with plans and specifications issued with this solicitation.

1.5 ESTIMATED CONSTRUCTION COST

The estimated construction cost of this project is between $5,000,000 and $7,500,000.

2 (FAR 52.214-6) EXPLANATION TO PROSPECTIVE BIDDERS (APRIL 1984).

Any prospective bidder desiring an explanation or interpretation of the solicitation, drawings, specifications, etc., must request it in writing soon enough to allow a reply to reach all prospective bidders before the submission of their bids. Oral explanations or instructions given before the award of a contract will not be binding. Any information given a prospective bidder concerning a solicitation will be furnished promptly to all other prospective bidders as an amendment to the solicitation, if that information is necessary in submitting bids or if the lack of it would be prejudicial to other prospective bidders.

3 (FAR 52.214-1) SOLICITATION DEFINITIONS - SEALED BIDDING (JULY 1987).

"Government" means United States Government. "Offer" means "bid" in sealed bidding. "Solicitation" means an invitation for bids in sealed bidding. (FAR 52.214-1.)

(NOTE: FACSIMILE, ELECTRONIC COMMERCE OR TELEGRAPHIC BIDS ARE NOT AUTHORIZED AND WILL NOT BE ACCEPTED. TELEGRAPHIC MODIFICATIONS OR WITHDRAWAL OF BIDS ARE AUTHORIZED. FACSIMILE MODIFICATIONS OR WITHDRAWAL ARE NOT AUTHORIZED.)

4 (FAR 52.214-5) SUBMISSION OF BIDS (MAR 1997).

(a) Bids and bid modifications shall be submitted in sealed envelopes or packages (unless submitted by electronic means) (1) addressed to the office specified in the solicitation and (2) showing the time and date specified for receipt, the solicitation number, and the name and address of the bidder.

(b) Bidders using commercial carrier services shall ensure that the bid is addressed and marked on the outermost envelope or wrapper as prescribed in subparagraphs (a) (1) and (2) of this provision when delivered to the office specified in the solicitation.

(c) Telegraphic bids will not be considered unless authorized by the solicitation; however, bids may be modified or withdrawn by written or telegraphic notice.

(d) Facsimile bids, modifications, or withdrawals, will not be considered unless authorized by the solicitation

(e) Bids submitted by electronic commerce shall be considered only if the electronic commerce method was specifically stipulated or permitted by the solicitation.

5 (FAR 52.214-18) PREPARATION OF BIDS - CONSTRUCTION (APRIL 1984).

(a) Bids must be--

(1) Submitted on the forms furnished by the Government or on copies of those forms, and
(2) **Manually signed**. The person signing a bid must initial each erasure or change appearing on any bid form.

(b) The bid form may require bidders to submit bid prices for one or more items on various bases, including--

(1) Lump sum bidding;

(2) Alternate prices;

(3) Units of construction; or

(4) Any combination of subparagraphs (1) through (3) above.

(c) If the solicitation requires bidding on all items, failure to do so will disqualify the bid. If bidding on all items is not required, bidders should insert the words "no bid" in the space provided for any item on which no price is submitted.

(d) Alternate bids will not be considered unless this solicitation authorizes their submission.

6 (FAR 52.214-4) FALSE STATEMENTS IN BIDS (APRIL 1984).

Bidders must provide full, accurate, and complete information as required by this solicitation and its attachments. The penalty for making false statements in bids is prescribed in 18 U.S.C. 1001.

(NOTE: FACSIMILE, ELECTRONIC COMMERCE OR TELEGRAPHIC BIDS ARE NOT AUTHORIZED AND WILL NOT BE ACCEPTED. TELEGRAPHIC MODIFICATIONS OR WITHDRAWAL OF BIDS ARE AUTHORIZED. FACSIMILE MODIFICATIONS OR WITHDRAWAL ARE NOT AUTHORIZED.)

7 (FAR 52.214-7) LATE SUBMISSIONS, MODIFICATIONS, AND WITHDRAWALS OF BIDS (NOV 1999).

(a) Bidders are responsible for submitting bids, and any modifications or withdrawals, so as to reach the Government office designated in the invitation for bids (IFB) by the time specified in the IFB. If no time is specified in the IFB, the time for receipt is 4:30 p.m., local time, for the designated Government office on the date that bids are due.

(b)(1) Any bid, modification, or withdrawal received at the Government office designated in the IFB after the exact time specified for receipt of bids is “late” and will not be considered unless it is received before award

is made, the Contracting Officer determines that accepting the late bid would not unduly delay the acquisition; and—

(i) If it was transmitted through an electronic commerce method authorized by the IFB, it was received at the initial point of entry to the Government infrastructure not later than 5:00 p.m. one working day prior to the date specified for receipt of bids; or

(ii) There is acceptable evidence to establish that it was received at the Government installation designated for receipt of bids and was under the Government's control prior to the time set for receipt of bids.

(2) However, a late modification of an otherwise successful bid that makes its terms more favorable to the Government, will be considered at any time it is received and may be accepted.

(c) Acceptable evidence to establish the time of receipt at the Government installation includes the time/date stamp of that installation on the bid wrapper, other documentary evidence of receipt maintained by the installation, or oral testimony or statements of Government personnel.

(d) If an emergency or unanticipated event interrupts normal Government processes so that bids cannot be received at the Government office designated for receipt of bids by the exact time specified in the IFB and urgent Government requirements preclude amendment of the IFB, the time specified for receipt of bids will be deemed to be extended to the same time of day specified in the solicitation on the first work day on which normal Government processes resume.

(e) Bids may be withdrawn by written notice received at any time before the exact time set for receipt of bids. If the IFB authorizes facsimile bids, bids may be withdrawn via facsimile received at any time before the exact time set for receipt of bids, subject to the conditions specified in the provision at 52.214-31, Facsimile Bids. A bid may be withdrawn in person by a bidder or its authorized representative if, before the exact time set for receipt of bids, the identity of the person requesting withdrawal is established and the person signs a receipt for the bid.

(End of provision)

8 INFORMATION FOR MODIFYING BIDS.

Bids which have been delivered to the designated bid receiving office may be modified or withdrawn by mail, mailgram, or telegram received at any time before the exact time set for receipt of bids. Modifications or withdrawals sent by mail should be transmitted to the place of bid opening Standard Form SF1442 (Page 00010-1), Item 8. Telephone modifications or withdrawals, other than telecopier, will not be accepted. All bid modifications or withdrawals must be signed by the bidder or its authorized representative. Any questions regarding these procedures should be directed to the Omaha District's Contracting Division at (402) 221-4265. This number should also be used to verify the receipt of messages.

9 BID GUARANTEE.

See Contract Clauses clause FAR 52.228-1, BID GUARANTEE. Bid guarantee MUST be in an original and accompanied by an original power of attorney of the surety.

10 PERFORMANCE AND PAYMENT BONDS.

See Contract Clauses clause FAR 52.228-15, PERFORMANCE AND PAYMENT BONDS. To have the bond considered valid, both the bond and the Power of Attorney must be original. Facsimile copies will not be acceptable, and will render the bid invalid, therefore eliminating it from competition.

(NOTE: FOR THE PURPOSES OF THIS SOLICITATION, THE WORD "ITEM" SHALL BE CONSIDERED TO MEAN "SCHEDULE.")

11 (FAR 52.214-19) CONTRACT AWARD - SEALED BIDDING - CONSTRUCTION (AUG 1996).

(a) The Government will evaluate bids in response to this solicitation without discussions and will award a contract to the responsible bidder whose bid, conforming to the solicitation, will be most advantageous to the Government, considering only price and the price-related factors specified elsewhere in the solicitation.

(b) The Government may reject any or all bids, and waive informalities or minor irregularities in bids received.

(c) The Government may accept any item or combination of items, unless doing so is precluded by a restrictive limitation in the solicitation of the bid.

(d) The Government may reject a bid as nonresponsive if the prices bid are materially unbalanced between line items or subline items. A bid is materially unbalanced when it is based on prices significantly less than cost for some work, and prices which are significantly overstated in relation to cost for other work, and if there is a reasonable doubt that the bid will result in the lowest overall cost to the Government even though it may be the low evaluated bid, of it is so unbalanced as to be tantamount to allowing an advance payment.

12 NORTH AMERICAN CLASSIFICATION SYSTEM (NAICS).

In accordance with NAICS Manual, the work in this solicitation is assigned classification code 23322.

13 SMALL BUSINESS SIZE STANDARD.

This solicitation is not limited to small business concerns, but, for definition purposes, a concern is small if its average annual receipts for its preceding 3 fiscal years did not exceed $27.5 million. (based on FAR 19.102)

14 (FAR 52.214-3) AMENDMENTS TO INVITATIONS FOR BIDS (DECEMBER 1989).

(a) If this solicitation is amended, then all terms and conditions which are

not modified remain unchanged.

(b) Bidders shall acknowledge receipt of any amendment to this solicitation (1) by signing and returning the amendment, (2) by identifying the amendment number and date in the space provided for this purpose on the form for submitting a bid, (3) by letter or telegram or (4) by facsimile, if facsimile bids are authorized in the solicitation. The Government must receive the acknowledgment by the time and at the place specified for receipt of bids. (FAR 52.214-3.)

15 CHANGES PRIOR TO OPENING BIDS.

The right is reserved, as the interest of the Government may require, to revise the specifications and/or drawings prior to the date set for opening bids. Such revisions will be announced by an amendment or amendments to this Invitation for Bids. **It shall be the responsibility of the prospective bidder to obtain copies of amendments from the website listed in paragraph: PLAN HOLDER'S LIST below**. The Government may (but not required) send an amendment notification to let prospective bidders know that an amendment has been issued. If the revisions and amendments are of a nature which requires material changes in quantities or prices to be bid, the date set for opening bids may be postponed as necessary, in the opinion of the Commander, to enable bidders to revise their bids. In such cases, the amendment will include an announcement of the new date for opening bids.

16 (FAR 52.214-34) SUBMISSION OF OFFERS IN THE ENGLISH LANGUAGE (APR 1991)

Offers submitted in response to this solicitation shall be in the English language. Offers received in other than English shall be rejected.

(End of provision)

17 (FAR 52.214-35) SUBMISSION OF OFFERS IN U.S. CURRENCY (APR 1991)

Offers submitted in response to this solicitation shall be in terms of U.S. dollars. Offers received in other than U.S. dollars shall be rejected.

(End of provision)

18 (EFARS 52.214-5000) ARITHMETIC DISCREPANCIES.

(a) For the purpose of initial evaluation of bids, the following will be utilized in resolving arithmetic discrepancies found on the face of the bidding schedule as submitted by the bidder:

(1) Obviously misplaced decimal points will be corrected;

(2) In case of discrepancy between unit price and extended price, the unit price will govern;

(3) Apparent errors in extension of unit prices will be corrected;

(4) Apparent errors in addition of lump sum and extended prices will be corrected.

(b) For the purposes of bid evaluation, the Government will proceed on the assumption that the bidder intends his bid to be evaluated on the basis of the unit prices, extensions, and totals arrived at by resolution of arithmetic discrepancies as provided above and the bid will be so reflected on the abstract of bids.

(c) These correction procedures shall not be used to resolve any ambiguity concerning which bid is low.

19 (FAR 52.217-5) EVALUATION OF OPTIONS (JUL 1990).

Except when it is determined in accordance with FAR 17.206(b) not to be in the Government's best interests, the Government will evaluate offers for award purposes by adding the total price for all options to the total price for the basic requirement. Evaluation of options will not obligate the Government to exercise the option(s).

20 OPTIONS.

The Government may reject an offer as nonresponsive if it is materially unbalanced as to prices for the basic requirement and the option quantities. An offer is unbalanced when it is based on prices significantly less than cost for some work and prices which are significantly overstated for other work.

21 AVAILABILITY OF SPECIFICATIONS, STANDARDS, AND DESCRIPTIONS.

Specifications, standards, and descriptions cited in this solicitation are available as indicated below:

21.1 (FAR 52.211-2) AVAILABILITY OF SPECIFICATIONS LISTED IN THE DOD INDEX OF SPECIFICATIONS AND STANDARDS (DODISS) AND DESCRIPTIONS LISTED IN THE ACQUISITION MANAGEMENT SYSTEMS AND DATA REQUIREMENTS CONTROL LIST, DOD 5010.12-L (DEC 1999).

Copies of specifications, standards, and data item descriptions cited in this solicitation may be obtained—

(a) From the ASSIST database via the Internet at http://assist.daps.mil; or

(b) By submitting a request to the—

Department of Defense Single Stock Point (DoDSSP)
Building 4, Section D
700 Robbins Avenue
Philadelphia, PA 19111-5094
Telephone (215) 697-2667/2179
Facsimile (215) 697-1462.

(End of provision)

21.2 CORPS OF ENGINEERS SPECIFICATIONS.

Corps of Engineers specifications of the CRD-C series may be obtained from the National Institute of Building Sciences Construction Criteria Base (CCB) on CD-ROM. Contact the CCB directly at (202) 289-7800 for an order form or obtain an order form at the following internet address: http://www.ccb.org/ccbsubscribe/Subsmain.asp. There is a regular annual subscription fee to CCB of $700 per year. (Note: This is considered to be the Contractor's responsibility and cost). This will include CCB on CD-ROM or DVD plus unlimited internet access plus access to the new Whole Building Design Guide, now under construction and scheduled for launch in October 2001. Selected Corps of Engineers specifications of CRD-C series are available in Acrobat Reader .pdf file format at the following internet address: http://www.wes.army.mil/SL/MTC/handbook/handbook.htm.

21.3 COMMERCIAL (NON-GOVERNMENT) SPECIFICATIONS, STANDARDS, AND DESCRIPTIONS.

These specifications, standards, and descriptions are not available from Government sources. They may be obtained from the publishers.

22 AVAILABLE PLANT.

Each bidder shall, upon request of the Contracting Officer, furnish a list of the plant available to the bidder and proposed for use on the work.

23 EQUIPMENT OWNERSHIP AND OPERATING EXPENSE SCHEDULE.

Whenever a contract or modification of contract price is negotiated, the Contractor's cost proposals for equipment ownership and operating expenses shall be determined in accordance with the requirements of paragraph: EQUIPMENT OWNERSHIP AND OPERATING EXPENSE SCHEDULE, contained in Section: 00800, SPECIAL CONTRACT REQUIREMENTS of the specifications. A copy of EP 1110-1-8 "Construction Equipment Ownership and Operating Expense Schedule" is available for review at the office listed in paragraph: SITE VISIT (CONSTRUCTION) herein or at the following internet address: http://www.usace.army.mil/inet/usace-docs/eng-pamphlets/ep.htm. (copy also included on CD-ROM issued with this solicitation). .

24 NOTICE REGARDING BUY AMERICAN ACT.

The Buy American Act (41 U.S.C. 10a-10d) generally requires that only domestic construction material be used in the performance of this contract. Exception from the Buy American Act shall be permitted only in the case of nonavailability of domestic construction materials. A bid or proposal offering nondomestic construction material will not be accepted unless specifically approved by the Government. When a bidder or offeror proposes to furnish nondomestic construction material, his bid or proposal must set

forth an itemization of the quantity, unit price, and intended use of each item of such nondomestic construction material. When offering nondomestic construction material pursuant to this paragraph, bids or proposals may also offer, at stated prices, any available comparable domestic construction material, so as to avoid the possibility that failure of a nondomestic construction material to be acceptable under this paragraph will cause rejection of the entire bid. All bidders are cautioned that, prior Government conduct notwithstanding, the Contractor's selection of a domestic construction material (as defined in FAR 52.225-5 Buy American Act-Construction Materials) which would require the subsequent selection of a foreign construction material for compatibility is not a justification for waiver of the Buy American Act. It is the Contractor's responsibility to verify, prior to submitting the materials for approval, that each system can be built to meet the contract specifications without the use of foreign construction materials.

25 (FAR 52.236-27) SITE VISIT (CONSTRUCTION) (FEB 1995).

(a) The clauses at 52.236-2, Differing Site Conditions, and 52.236-3, Site Investigations and Conditions Affecting the Work, will be included in any contract awarded as a result of this solicitation. Accordingly, offerors or quoters are urged and expected to inspect the site where the work will be performed.

(b) Contractors interested in inspecting the site of the proposed work should contact Mehrdad Sadeghi, P.E., Chief of Engineering, United States Air Force Reserve Command, 760 Military Highway, Minneapolis St. Paul IAP-ARS, Minneapolis, Minnesota 55450-2000, Phone:(612) 713-1912, Fax: (612) 713-1950.

26 BIDDER'S QUESTIONS AND COMMENTS.

Questions and/or comments relative to these bidding documents should be submitted via e-mail or mailed to the address identified in paragraph: AVAILABILITY OF BID RESULTS below. Comments should reach this office no later than 20 calendar days prior to the date set for opening of bids, if feasible, in order that changes, if needed, may be added by amendment. E-mail addresses, FAX numbers, items for question and points of contact are listed below. Phone calls with questions should be made between 8:30 a.m. and 3:30 p.m. (Central Standard Time) Monday through Friday.

Note: A courtesy copy of all questions shall be sent to the Contract Specialist (Contractual Matters Point of Contact), the Program Manager and Specifications Section (Technical Content Points of Contact).

Items for Question	Points of Contact/ Phone numbers/ FAX Numbers	E-mail Addresses
Contractual Matters: Ordering CD-Rom of the plans and specifications	Loreen Blume 402-221-4265 (phone) 402-221-4199 (Fax)	Loreen.K.Blume@usace.army.mil

(limit One per firm)/
amendments**/
Bid Results (See
Paragraph AVAILABILITY
OF BID RESULTS, below)/
Receipt of Bids

Planholder's List	See paragraph: PLAN HOLDER'S LIST, below.	
Small Business Matters	Hubert Carter 402-221-4110 (phone)	hubert.j.carter@usace.army.mil
Technical Contents Of Plans and Specification	Vince Truner 402-221-4561 (phone) 402-221-4190(Fax)	Vincent.C.Turner@usace.army.mil
	Or	
	Specifications Section Marylee Stobbe 402-221-4411 (Phone) 402-221-3842 (Fax)	Marylee.F.Stobbe@usace.army.mil
Site Inspection	See Paragraph: SITE VISIT (CONSTRUCTION), above	

**** - The Government may elect to send a notification that an amendment has been posted to the Government's web address. It shall be the Contractor's, Subcontractor's and Supplier's responsibility to check the Government's web address for amendments.**

26.1 PLAN HOLDER'S LIST.

The CD-Rom will provide a list of plan holders that have registered at the time the CD-Rom was created. It is bidder's responsibility to check for any updates to the plan holder's list, which is available at the following web address:

http://ebs-nwo.wes.army.mil/

26.2 AVAILABILITY OF BID RESULTS (Local Clause/Provision)

Bid results will be available after bid opening on the Governent's web address:
http://ebs-nwo.wes.army.mil/. Official bid abstracts will be available and may be requested by sending a self-addressed stamped envelope to: U.S. Army Corps of Engineers, Omaha District, ATTN: CENWO-CT-M (Blume), 106 South 15th Street, Omaha, NE 68102-1618.

27 (FAR 52.233-2) SERVICE OF PROTEST (AUG 1996).

(a) Protests, as defined in section 33.101 of the Federal Acquisition Regulation, that are filed directly with an agency, and copies of any protests that are filed with the General Accounting Office (GAO), shall be served on the Contracting Officer (addressed as follows) by obtaining written and dated acknowledgement of receipt from District Counsel, 106 South 15th Street, Omaha, Nebraska 68102-1618.

(b) The copy of any protest shall be received in the office designated above within one day of filing a protest with the GAO.

28 PRE-AWARD SURVEY INFORMATION (Local Provision) (Sep 93)

In accordance with Paragraph PERFORMANCE AND PAYMENT BONDS, request that the following information be submitted with your bid. This facilitates the award process.

1. Financial
   - Name, address, and fax number of Financial Institution
   - Name and phone number of finance individual (primary and alternate) to be contacted for information

2. Bonding Information
   - Provide the name, address, regular phone number and fax number of your Surety Company.

3. Performance
   - Provide three (3) references to be contacted on your company's performance

   The following information should be submitted:
   Name and Fax number of Owner/User
   Project Name, Location, Contract Number, and dollar value
   Name and phone number of individuals (primary and alternate) that can verify performance of the project

29 (FAR 52.204-6) DATA UNIVERSAL NUMBERING SYSTEM (DUNS) NUMBER (JUNE 1999)

(a) The offeror shall enter, in the block with its name and address on the cover page of its offer, the annotation "DUNS" followed by the DUNS number that identifies the offeror's name and address exactly as stated in the offer. The DUNS number is a nine-digit number assigned by Dun and Bradstreet Information Services.

(b) If the offeror does not have a DUNS number, it should contact Dun and Bradstreet directly to obtain one. A DUNS number will be provided immediately by telephone at no charge to the offeror. For information on obtaining a DUNS number, the offeror, if located within the United States, should call Dun and Bradstreet at 1-800-333-0505. The offeror should be prepared to provide the following information:

(1) Company name.

(2) Company address.

(3) Company telephone number.

(4) Line of business.

(5) Chief executive officer/key manager.

(6) Date the company was started.

(7) Number of people employed by the company.

(8) Company affiliation.

(c) Offerors located outside the United States may obtain the location and phone number of the local Dun and Bradstreet Information Services office from the Internet home page at http://www.customerservice@dnb.com. If an offeror is unable to locate a local service center, it may send an e-mail to Dun and Bradstreet at globalinfo@mail.dnb.com.

(End of provision)

30 (FAR 52.216-1) TYPE OF CONTRACT (APR 1984).

The Government contemplates award of a Firm Fixed Price contract resulting from this solicitation.

31 SUBCONTRACTING PLAN/SUBCONTRACTING GOALS REGARDING THE UTILIZATION OF SMALL BUSINESS CONCERNS.

a. Application. This clause applies only to large business concerns submitting bids for services exceeding $500,000 or for construction exceeding $1,000,000.

b. Federal Acquisition Regulations (FAR). Attention is directed to the following FAR provisions contained in this solicitation:

52.219-8, Utilization of Small Business Concerns (Alternate I)

52.219-9, Small Business Subcontracting Plan (Alternate I)

52.219-16, Liquidated Damages - Small Business Subcontracting Plan

52.226-1, Utilization of Indian Organizations and Indian-Owned Economic Enterprises

c. Goals. The U.S. Army Corps of Engineers considers the following goals reasonable and achievable for fiscal year 2002 and for the performance of the resultant contract:

(1) 61.4% of planned subcontracting dollars with small business concerns.

(2) 9.1% of planned subcontracting dollars with those small business concerns owned and controlled by socially and economically disadvantaged individuals.

(3) 5.0% of planned subcontracting dollars with those small business concerns owned and controlled by women.

(4) 3.0% of planned subcontracting dollars with those small business concerns owned and controlled by Severely Disable Veterans.

(5) 2.5% of planned subcontracting dollars with those small business concerns owned and controlled by HubZones.

d. Submission and Review of Subcontracting Plan.

SUBMISSION OF SMALL BUSINESS SUBCONTRACTING PLAN IS NOT APPLICABLE TO SMALL BUSINESSES.

(1) The apparent low bidder must submit a subcontracting plan within five (5) calendar days after bid opening (a longer period maybe granted by the Contracting Officer upon request) within 24 hours after notification by the Government to the Contracting Activity.

(2) Goals included in the subcontracting plan should be at least equal to those indicated above. If lesser goals are proposed, the bidder may be required to substantiate how the proposed plan represents the bidder's best effort to comply with the terms and conditions of the solicitation. Bidders are highly encouraged to become familiar with the intent of the solicitation provisions and the elements of the subcontracting plan.

(3) The subcontracting plan must contain, as a minimum, the elements set forth in FAR provision 52.219-9. An example subcontracting plan will be furnished to the apparent low bidder (upon request). The example subcontracting plan (if requested) should not be construed as an acceptable subcontracting plan. Any format will be acceptable provided that the plan addresses each element as required by the Federal Acquisition Regulations and its supplements.

(4) Proposed plans will be reviewed by the Government to ensure the plan represents the firm's best efforts to maximize subcontracting opportunities for small, small disadvantaged and women-owned businesses.

(5) Subcontracting plans are required to be approved prior to Contract Award. The approved subcontracting plan (to include goals) will become a material part of the contract.

e. Failing to Submit An Acceptable Subcontracting Plan. An apparent low bidder failing to submit a subcontracting plan which demonstrates a reasonable effort to meet the goals listed above or provide an explanation why lesser goals are proposed (upon request), will be considered as non-

responsive and not considered eligible for award of the contract.

f. Questions or Assistance Needed in Developing Subcontracting Plan. For any questions or assistance needed in developing the subcontracting plan, contact the Contract Specialist or District's Deputing for Small Business (See paragraph: BIDDER QUESTIONS AND COMMENTS, Contract Specialist [Bid Results] or the District's Deputy for Small Business [Small Business] or fax your inquiries to 402-221-4199).

32 (DFARS 252.204-7004) REQUIRED CENTRAL CONTRACTOR REGISTRATION (NOV 2001)

(a) Definitions.

As used in this clause--

(1) “Central Contractor Registration (CCR database” means the primary DoD repository for contractor information required for the conduct of business with DoD.

(2) “Data Universal Numbering System (DUNS) number” means the 9-digit number assigned by Dun and Bradstreet Information Services to identify unique business entities.

(3) “Data Universal Numbering System +4 (DUNS+4) number” means the DUNS number assigned by Dun and Bradstreet plus a 4-digit suffix that may be assigned by a parent (controlling) business concern. This 4-digit suffix may be assigned at the discretion of the parent business concern for such purposes as identifying subunits or affiliates of the parent business concern.

(4) “Registered in the CCR database” means that all mandatory information, including the DUNS number or the DUNS+4 number, if applicable, and the corresponding Commercial and Government Entity (CAGE) code, is in the CCR database; the DUNS number and the CAGE code have been validated; and all edits have been successfully completed.

(b)(1) By submission of an offer, the offeror acknowledges the requirement that a prospective awardee must be registered in the CCR database prior to award, during performance, and through final payment of any contract resulting from this solicitation, except for awards to foreign vendors for work to be performed outside the United States.

(2) The offeror shall provide its DUNS or, if applicable, its DUNS+4 number with its offer, which will be used by the Contracting Officer to verify that the offeror is registered in the CCR database.

(3) Lack of registration in the CCR database will make an offeror ineligible for award.

(4) DoD has established a goal of registering an applicant in the CCR database within 48 hours after receipt of a complete and accurate application via the Internet. However, registration of an applicant submitting an application through a method other than the Internet may take up to 30 days.

Therefore, offerors that are not registered should consider applying for registration immediately upon receipt of this solicitation.

(c) The Contractor is responsible for the accuracy and completeness of the data within the CCR, and for any liability resulting from the Government's reliance on inaccurate or incomplete data. To remain registered in the CCR database after the initial registration, the Contractor is required to confirm on an annual basis that its information in the CCR database is accurate and complete.

(d) Offerors and contractors may obtain information on registration and annual confirmation requirements by calling 1-888-227-2423, or via the Internet at http://www.ccr.gov.

(End of clause)

REQUIRED CENTRAL CONTRACTOR REGISTRATION (CCR)

Register Now: Don't wait until you submit an offer on a solicitation. You must be registered to receive the contract award. It can often take 30 days for CCR to process your registration information.

Register One of Three Ways:

Internet: http://www.ccr.gov

Value Added Network (VAN) for EDI users: Contact your VAN for information. If you need to find a VAN look at http://www.acq.osd.mil/ec/ecip/van_list.htm

FAX or Mail: Call (888)227-2423 or (616)961-4725 to receive a registration package. FAX or mail the completed information to the CCR Assistance Center. It can take up to 30 days to process a faxed or mailed package.

CCR Assistance Center
74 Washington Street North, Suite 7
Battle Creek, MI 49017-3084
FAX: (616)961-7243

SECTION 00600
REPRESENTATIONS, CERTIFICATIONS & OTHER STATEMENTS OF BIDDERS

INDEX

1. (FAR 52.203-2) CERTIFICATE OF INDEPENDENT PRICE DETERMINATION (APR 1985).
2. (FAR 52.203-11) CERTIFICATION AND DISCLOSURE REGARDING PAYMENTS TO INFLUENCE CERTAIN FEDERAL TRANSACTIONS (APR 1991).
3. (FAR 52.204-3) TAXPAYER IDENTIFICATION (OCT 1998).
4. (FAR 52.204-5) WOMEN-OWNED BUSINESS (OTHER THAN SMALL BUSINESS) [MAY 1999]
5. (DFARS 252.204-7001) COMMERCIAL AND GOVERNMENT ENTITY (CAGE) CODE REPORTING (AUG 1999).
6. (FAR 52.209-5) CERTIFICATION REGARDING DEBARMENT, SUSPENSION, PROPOSED DEBARMENT, AND OTHER RESPONSIBILITY MATTERS (DEC 2001).
7. (DFARS 252.209-7001) DISCLOSURE OF OWNERSHIP OR CONTROL BY AFOREIGN GOVERNMENT THAT SUPPORTS TERRORISM (MAR 1998). [For Contracts exceeding $100,000]
8. (FAR 52.211-6) BRAND NAME OR EQUAL (AUG 1999).
9. RESERVED
10. RESERVED
11. (FAR 52.219-1) SMALL BUSINESS PROGRAM REPRESENTATIONS (MAY 2001) ALTERNATE I (OCT 2000) ALTERNATE II (OCT 2000)
12. (FAR 52.219-2) EQUAL LOW BIDS (OCT 1995)
13. RESERVED
14. (FARS 52.219-19) SMALL BUSINESS CONCERN REPRESENTATION FOR THE SMALL BUSINESS COMPETITIVENESS DEMONSTRATION PROGRAM (OCT 2000).
15. (FARS 52.219-21) SMALL BUSINESS SIZE REPRESENTATION FOR TARGETED INDUSTRY CATEGORIES UNDER THE SMALL BUSINESS COMPETITIVENESS DEMONSTRATION PROGRAM (MAY 1999).
16. (FAR 52.222-21) CERTIFICATION OF NONSEGREGATED FACILITIES (FEB 1999)
17. (FAR 52.222-22) PREVIOUS CONTRACTS AND COMPLIANCE REPORTS (FEB 1999).
18. (FAR 52.223-4) RECOVERED MATERIAL CERTIFICATION (OCT 1997)
19. (FAR 52.223-13) CERTIFICATION OF TOXIC CHEMICAL RELEASE REPORTING (OCT 2000) [For Contracts over $100,000]
20. (DFARS 252.225-7031) SECONDARY ARAB BOYCOTT OF ISRAEL (JUN 1992)
21. (DFARS 252.247-7022) REPRESENTATION OF EXTENT OF TRANSPORTATION BY SEA (AUG 1992).

SECTION 00600
REPRESENTATIONS, CERTIFICATIONS & OTHER STATEMENTS OF BIDDERS

The bidder (offeror) makes the following certification and representations as a part of the bid, shall check the appropriate boxes, fill in the appropriate information, and provide signatures on the attached "Solicitation Form" (00600) pages, and submit with Standard Form 1442 (Section 00010).

1. (FAR 52.203-2) CERTIFICATE OF INDEPENDENT PRICE DETERMINATION (APR 1985)

(a) The offeror certifies that -

(1) The prices in this offer have been arrived at independently, without, for the purpose of restricting competition, any consultation, communication, or agreement with any other offeror or competitor relating to (i) those prices, (ii) the intention to submit an offer, or (iii) the methods or factors used to calculate the prices offered;

(2) the prices in this offer have not been and will not be knowingly disclosed by the offeror, directly or indirectly, to any other offeror or competitor before bid opening (in the case of a Sealed Bid solicitation) or contract award (in the case of a negotiated solicitation) unless otherwise required by law; and

(3) no attempt has been made or will be made by the offeror to induce any other concern to submit or not to submit an offer for the purpose of restricting competition.

(b) Each signature on the offer is considered to be a certification by the signatory that the signatory -

(1) is the person in the offeror's organization responsible for determining the prices being offered in this bid or proposal, and that the signatory has not participated and will not participate in any action contrary to subparagraphs (a)(1) through (a)(3) above; or

(2)(i) has been authorized, in writing, to act as agent for the following principals in certifying that those principals have not participated, and will not participate in any action contrary to subparagraphs (a)(1) through (a)(3) above

_____

_____

_____ [insert full name of person(s) in the offeror's organization responsible for determining the prices offered in this bid or proposal, and the title of his or her position in the offeror's organization];

(ii) as an authorized agent, does certify that the principals named in subdivision (b)(2)(i) above have not participated, and will not participate, in any action contrary to subparagraphs (a)(1) through (a)(3) above; and

(iii) as an agent, has not personally participated, and will not participate, in any action contrary to subparagraphs (a)(1) through (a)(3) above.

(c) If the offeror deletes or modifies subparagraph (a)(2) above, the offeror must furnish with its offer a signed statement setting forth in detail the circumstances of the disclosure.

2. (FAR 52.203-11) CERTIFICATION AND DISCLOSURE REGARDING PAYMENTS TO INFLUENCE CERTAIN FEDERAL TRANSACTIONS (APR 1991)

(a) The definitions and prohibitions contained in the clause, at FAR 52.203-12, Limitation on Payments to Influence Certain Federal Transactions, included in this solicitation, are hereby incorporated by reference in paragraph (b) of this certification.

(b) The offeror, by signing its offer, hereby certifies to the best of his or her knowledge and belief that on or after December 23, 1989, -

(1) No Federal appropriated funds have been paid or will be paid to any person for influencing or attempting to influence an officer or employee of any agency, a Member of Congress, an officer or employee of Congress, or an employee of a Member of Congress on his or her behalf in connection with the awarding of any Federal contract, the making of any Federal grant, the making of any Federal loan, the entering into of any cooperative agreement, and the extension, continuation, renewal, amendment or modification of any Federal contract, grant, loan, or cooperative agreement;

(2) If any funds other than Federal appropriated funds (including profit or fee received under a covered Federal transaction) have been paid, or will be paid, to any person for influencing or attempting to influence an officer or employee of any agency, a Member of Congress, an officer or employee of Congress, or an employee of a Member of Congress on his or her behalf in connection with this solicitation, the offeror shall complete and submit, with its offer, OMB standard form LLL, Disclosure of Lobbying Activities, to the Contracting Officer; and

(3) He or she will include the language of this certification in all subcontract awards at any tier and require that all recipients of subcontract awards in excess of $100,000 shall certify and disclose accordingly.

(c) Submission of this certification and disclosure is a prerequisite for making or entering into this contract imposed by section 1352, title 31, United States Code. Any person who makes an expenditure prohibited under this provision or who fails to file or amend the disclosure form to be filed or amended by this provision, shall be subject to a civil penalty of not less than $10,000, and not more than $100,000, for each such failure.

3. (FAR 52.204-3) TAXPAYER IDENTIFICATION (OCT 1998)

(a) Definitions.

"Common parent," as used in this provision, means that corporate entity that owns or controls an affiliated group of corporations that files its Federal income tax returns on a consolidated basis, and of which the offeror is a member.

"Taxpayer Identification Number (TIN)," as used in this provision, means the number required by the Internal Revenue Service (IRS) to be used by the offeror in reporting income tax and other returns. The TIN may be either a Social Security Number or an Employer Identification Number.

(b) All offerors must submit the information required in paragraphs (d) through (f) of this provision to comply with debt collection requirements of 31 U.S.C. 7701(c) and 3325(d), reporting requirements of 26 U.S.C. 6041, 6041A, and 6050M, and implementing regulations issued by the IRS. If the resulting contract is subject to the payment reporting requirements described in Federal Acquisition Regulation (FAR) 4.904, the failure or refusal by the offeror to furnish the information may result in a 31 percent reduction of payments otherwise due under the contract.

(c) The TIN may be used by the Government to collect and report on any delinquent amounts arising out of the offeror's relationship with the Government (31 U.S.C. 7701(c)(3)). If the resulting contract is subject to the payment reporting requirements described in FAR 4.904, the TIN provided hereunder may be matched with IRS records to verify the accuracy of the offeror's TIN.

(d) Taxpayer Identification Number (TIN).

[ ] TIN: _____.

[ ] TIN has been applied for.

[ ] TIN is not required because:

[ ] Offeror is a nonresident alien, foreign corporation, or foreign partnership that does not have income effectively connected with the conduct of a trade or business in the United States and does not have an office or place of business or a fiscal paying agent in the United States;

[ ] Offeror is an agency or instrumentality of a foreign government;

[ ] Offeror is an agency or instrumentality of the Federal Government.

(e) Type of organization.

[ ] Sole proprietorship;

[ ] Partnership;

[ ] Corporate entity (not tax-exempt);

[ ] Corporate entity (tax-exempt);

[ ] Government entity (Federal, State, or local);

[ ] Foreign government;

[ ] International organization per 26 CFR 1.6049-4;

[ ] Other _____.

(f) Common parent.

[ ] Offeror is not owned or controlled by a common parent as defined in paragraph (a) of this provision.

[ ] Name and TIN of common parent:

Name _____

TIN _____

(End of provision)

4. (FAR 52.204-5) WOMEN-OWNED BUSINESS (OTHER THAN SMALL BUSINESS) [MAY 1999]

(a) *Definition.* Women-owned business concern, as used in this provision, means a concern that is

at least 51 percent owned by one or more women; or in the case of any publicly owned business, at least 51 percent of its stock is owned by one or more women; and whose management and daily business operations are controlled by one or more women.

(b) *Representation. [Complete only if the offeror is a women-owned business concern and has not represented itself as a small business concern in paragraph (b)(1) of FAR 52.219–1, Small Business Program Representations, of this solicitation.]* The offeror represents that it [ ] is a women-owned business concern.
(End of provision)

5. (DFARS 252.204-7001) COMMERCIAL AND GOVERNMENT ENTITY (CAGE) CODE REPORTING (AUG 1999).

(a) The offeror is requested to enter its CAGE code on its offer in the block with its name and address. The CAGE code entered must be for that name and address. Enter "CAGE" before the number.

(b) If the offeror does not have a CAGE code, it may ask the Contracting Officer to request one from the Defense Logistics Information Service (DLIS). The Contracting Officer will-

(1) Ask the Contractor to complete section B of a DD Form 2051, Request for Assignment of a Commercial and Government Entity (CAGE) Code;

(2) Complete section A and forward the form to DLIS; and

(3) Notify the Contractor of its assigned CAGE code.

(c) Do not delay submission of the offer pending receipt of a CAGE code.

6. (FAR 52.209-5) CERTIFICATION REGARDING DEBARMENT, SUSPENSION, PROPOSED DEBARMENT, AND OTHER RESPONSIBILITY MATTERS (DEC 2001)

(a)(1) The Offeror certifies, to the best of its knowledge and belief, that—
(i) The Offeror and/or any of its Principals—
(A) Are [ ] are not [ ] presently debarred, suspended, proposed for debarment, or declared ineligible for the award of contracts by any Federal agency;
(B) Have [ ] have not [ ], within a three-year period preceding this offer, been convicted of or had a civil judgment rendered against them for: commission of fraud or a criminal offense in connection with obtaining, attempting to obtain, or performing a public (Federal, state, or local) contract or subcontract; violation of Federal or state antitrust statutes relating to the submission of offers; or commission of embezzlement, theft, forgery, bribery, falsification or destruction of records, making false statements, tax evasion, or receiving stolen property; and
(C) Are [ ] are not [ ] presently indicted for, or otherwise criminally or civilly charged by a governmental entity with, commission of any of the offenses enumerated in paragraph (a)(1)(i)(B) of this provision.
(ii) The Offeror has [ ] has not [ ], within a three-year period preceding this offer, had one or more contracts terminated for default by any Federal agency.
(2) "Principals," for the purposes of this certification, means officers; directors; owners; partners; and, persons having primary management or supervisory responsibilities within a business entity (*e*.g., general manager; plant manager; head of a subsidiary, division, or business segment, and similar positions).

This Certification Concerns a Matter Within the Jurisdiction of an Agency of the United States and the Making of a False, Fictitious, or Fraudulent Certification May Render the Maker Subject

to Prosecution Under Section 1001, Title 18, United States Code.

(b) The Offeror shall provide immediate written notice to the Contracting Officer if, at any time prior to contract award, the Offeror learns that its certification was erroneous when submitted or has become erroneous by reason of changed circumstances.

(c) A certification that any of the items in paragraph (a) of this provision exists will not necessarily result in withholding of an award under this solicitation. However, the certification will be considered in connection with a determination of the Offeror's responsibility. Failure of the Offeror to furnish a certification or provide such additional information as requested by the Contracting Officer may render the Offeror nonresponsible.

(d) Nothing contained in the foregoing shall be construed to require establishment of a system of records in order to render, in good faith, the certification required by paragraph (a) of this provision. The knowledge and information of an Offeror is not required to exceed that which is normally possessed by a prudent person in the ordinary course of business dealings.

(e) The certification in paragraph (a) of this provision is a material representation of fact upon which reliance was placed when making award. If it is later determined that the Offeror knowingly rendered an erroneous certification, in addition to other remedies available to the Government, the Contracting Officer may terminate the contract resulting from this solicitation for default. (End of Provision)

7. (DFARS 252.209-7001) DISCLOSURE OF OWNERSHIP OR CONTROL BY A FOREIGN GOVERNMENT THAT SUPPORTS TERRORISM (MAR 1998) [For Contracts exceeding $100,000]

(a) Definitions.

As used in this provision-

(1) "Government of a terrorist country" includes the state and the government of a terrorist country, as well as any political subdivision, agency, or instrumentality thereof.

(2) "Terrorist country" means a country determined by the Secretary of State, under section 6(j)(1)(A)) of the Export Administration Act of 1979 (50 U.S.C. App. 2405(j)(i)(A)), to be a country the government of which has repeatedly provided support for acts of international terrorism. As of the date of this provision, terrorist countries include: Cuba, Iran, Iraq, Libya, North Korea, Sudan, and Syria.

(3) "Significant interest" means-

(i) Ownership of or beneficial interest in 5 percent or more of the firm's or subsidiary's securities. Beneficial interest includes holding 5 percent or more of any class of the firm's securities in "nominee shares," "street names," or some other method of holding securities that does not disclose the beneficial owner;

(ii) Holding a management position in the firm, such as a director or officer;

(iii) Ability to control or influence the election, appointment, or tenure of directors or officers in the firm;

(iv) Ownership of 10 percent or more of the assets of a firm such as equipment, buildings, real estate, or other tangible assets of the firm; or

(v) Holding 50 percent or more of the indebtedness of a firm.

(b) Prohibition on award. In accordance with 10 U.S.C. 2327, no contract may be awarded to a firm or a subsidiary of a firm if the government of a terrorist country has a significant interest in the firm or subsidiary [or, in the case of a subsidiary, the firm that owns the subsidiary], unless a waiver is granted by the Secretary of Defense.

(c) Disclosure.

The Offeror shall disclose any significant interest the government of each of the following countries has in the Offeror or a subsidiary of the Offeror. If the Offeror is a subsidiary, it shall also disclose any significant interest the government of a terrorist country has in any firm that owns or controls the subsidiary. The disclosure shall include--

(1) Identification of each government holding a significant interest; and
(2) A description of the significant interest held by each Government.
(End of provision)

8. (FAR 52.211-6) BRAND NAME OR EQUAL (AUG 1999).

(a) If an item in this solicitation is identified as "brand name or equal," the purchase description reflects the characteristics and level of quality that will satisfy the Government's needs. The salient physical, functional, and other characteristics that "equal" products must meet are specified in the solicitation.

(b) To be considered for award, offers of "equal" products, including “equal” products of the brand name manufacturer, must--

(1) Meet the salient physical, functional, and other characteristics specified in the solicitation;

(2) Clearly identify the item by--

(i) Brand name, if any; and

(ii) Make or model number;

(3) Include descriptive literature such as cuts, illustrations, drawings, or a clear reference to previously furnished descriptive data or information available to the Contracting Officer; and

(4) Clearly describe any modifications the offeror plans to make in a product to make it conform to the solicitation requirements. Mark any descriptive material to clearly show the modifications.

(c) The Contracting Officer will evaluate "equal" products on the basis of information by the offeror or identified in the offer and reasonably available to the Contracting Officer. The Contracting Officer is not responsible for locating or securing any information not identified in the offer.

(d) Unless the offeror clearly indicates in its offer that the product being offered is an "equal" product, the offeror shall provide the brand name product referenced in the solicitation.

9. RESERVED

10. RESERVED

11. (FAR 52.219-1) SMALL BUSINESS PROGRAM REPRESENTATIONS (MAY 2001) ALTERNATE I (OCT 2000) ALTERNATE II (OCT 2000)

(a) (1) The North American Industry Classification System (NAICS) code for this acquisition is _____ [insert NAICS code].

(2) The small business size standard is $_____ (insert size standard).

(3) The small business size standard for a concern which submits an offer in its own name, other than on a construction or service contract, but which proposes to furnish a product which it did not itself manufacture, is 500 employees.

(b) Representations. (1) The offeror represents as part of its offer that it [ ] is, [ ] is not a small business concern.

(2) *[Complete only if offeror represented itself as a small business concern in paragraph (b)(1) of this provision.]* The offeror represents, for general statistical purposes, that it [ ] is, [ ] is not, a small disadvantaged business concern as defined in 13 CFR 124.1002.

(3) *[Complete only if offeror represented itself as a small business concern in paragraph (b)(1) of this provision.]* The offeror represents as part of its offer that it [ ] is, [ ] is not a women-owned small business concern.

(4) [Complete only if the offeror represented itself as a small business concern in paragraph (b)(1) of this provi sion.] The offeror represents as part of its offer that it [ ] is, [ ] is not a veteran-owned small business concern.

(5) [Complete only if the offeror represented itself as a veteran-owned small business concern in paragraph (b)(4) of this provision.] The offeror represents as part of its offer that it [ ] is, [ ] is not a service-disabled veteran-owned small business concern.

(6) [*Complete only if offeror represented itself as a small business concern in paragraph (b)*(1) of this provision.] The offeror represents, as part of its offer, that—

(i) It [ ] is, [ ] is not a HUBZone small business concern listed, on the date of this representation, on the List of Qualified HUBZone Small Business Concerns maintained by the Small Business Administration, and no material change in ownership and control, principal place of ownership, or HUBZone employee percentage has occurred since it was certified by the Small Business Administration in accordance with 13 CFR part 126; and

(ii) It [ ] is, [ ] is not a joint venture that complies with the requirements of 13 CFR part126, and the representation in paragraph (b)(6)(i) of this provision is accurate for the HUBZone small business concern or concerns that are participating in the joint venture. [*The offeror shall enter the name or names of the HUBZone small business concern or concerns that are participating in the joint venture*: _____.] Each HUBZone small business concern participating in the joint venture shall submit a separate signed copy of the HUBZone representation.

(7) *[Complete if offeror represented itself as disadvantaged in paragraph (b)(2) of this provision*]. The offeror shall check the category in which its ownership falls:

____ Black American.

____ Hispanic American.

____ Native American (American Indians, Eskimos, Aleuts, or Native Hawaiians).

____ Asian-Pacific American (persons with origins from Burma, Thailand, Malaysia, Indonesia, Singapore, Brunei, Japan, China, Taiwan, Laos, Cambodia (Kampuchea), Vietnam, Korea, The Philippines, U.S. Trust Territory of the Pacific Islands (Republic of Palau), Republic of the Marshall Islands, Federated States of Micronesia, the Commonwealth of the Northern Mariana Islands, Guam, Samoa, Macao, Hong Kong, Fiji, Tonga, Kiribati, Tuvalu, or Nauru).

____ Subcontinent Asian (Asian-Indian) American (persons with origins from India, Pakistan, Bangladesh, Sri Lanka, Bhutan, the Maldives Islands, or Nepal).

____ Individual/concern, other than one of the preceding.

(c) Definitions. As used in this provision—

"Service-disabled veteran-owned small business concern"—

(1) Means a small business concern—

(i) Not less than 51 percent of which is owned by one or more service-disabled veterans

or, in the case of any publicly owned business, not less than 51 percent of the stock of which is owned by one or more service-disabled veterans; and

(ii) The management and daily business operations of which are controlled by one or more service-disabled veterans or, in the case of a veteran with permanent and severe disability, the spouse or permanent caregiver of such veteran.

(2) Service-disabled veteran means a veteran, as defined in 38 U.S.C. 101(2), with a disability that is service-connected, as defined in 38 U.S.C. 101(16).

"Small business concern" means a concern, including its affiliates, that is independently owned and operated, not dominant in the field of operation in which it is bidding on Government contracts, and qualified as a small business under the criteria in 13 CFR part 121 and the size standard in paragraph (a) of this provision.

"Veteran-owned small business concern" means a small business concern—

(1) Not less than 51 percent of which is owned by one or more veterans (as defined at 38 U.S.C. 101(2)) or, in the case of any publicly owned business, not less than 51 percent of the stock of which is owned by one or more veterans; and

(2) The management and daily business operations of which are controlled by one or more veterans.

"Women-owned small business concern" means a small business concern—

(1) That is at least 51 percent owned by one or more women; or, in the case of any publicly owned business, at least 51 percent of the stock of which is owned by one or more women; and

(2) Whose management and daily business operations are controlled by one or more women.

(d) *Notice.* (1) If this solicitation is for supplies and has been set aside, in whole or in part, for small business concerns, then the clause in this solicitation providing notice of the set-aside contains restrictions on the source of the end items to be furnished.

(2) Under 15 U.S.C. 645(d), any person who misrepresents a firm's status as a small, small disadvantaged or women-owned small business concern in order to obtain a contract to be awarded under the preference programs established pursuant to sections 8(a), 8(d), 9, or 15 of the Small Business Act or any other provision of Federal law that specifically references section 8(d) for a definition of program eligibility, shall-

(i) Be punished by imposition of fine, imprisonment, or both;

(ii) Be subject to administrative remedies, including suspension and debarment; and

(iii) Be ineligible for participation in programs conducted under the authority of the Act.

12. (FAR 52.219-2) <u>EQUAL LOW BIDS (OCT 1995)</u>

(a) This provision applies to small business concerns only.

(b) The bidder's status as a labor surplus area (LSA) concern may affect entitlement to award in case of tie bids. If the bidder wishes to be considered for this priority, the bidder must identify, in the following space, the LSA in which the costs to be incurred on account of manufacturing or production (by the bidder or the first-tier subcontractors) amount to more than 50 percent of the contract price.

_____ _____

_____ _____

(c) Failure to identify the labor surplus areas as specified in paragraph (b) of this provision will preclude the bidder from receiving priority consideration. If the bidder is awarded a contract as a result of receiving priority consideration under this provision and would not have otherwise received award, the bidder shall perform the contract or cause the contract to be performed in accordance with the obligations of an LSA concern.

13. RESERVED

14. (FARS 52.219-19) SMALL BUSINESS CONCERN REPRESENTATION FOR THE SMALL BUSINESS COMPETITIVENESS DEMONSTRATION PROGRAM (OCT 2000)

(a) *Definition.* "Emerging small business" as used in this solicitation, means a small business concern whose size is no greater than 50 percent of the numerical size standard applicable to the North American Industry Classification System (NAICS) code assigned to a contracting opportunity.

(b) (Complete only if Offeror has represented itself under the provision at FAR 52.219-1 as a small business concern under the size standards of this solicitation.) The Offeror [ ] is, [ ] is not an emerging small business.

(c) (Complete only if the Offeror is a small business or an emerging small business, indicating its size range.)

Offeror's number of employees for the past 12 months (check this column if size standard stated in solicitation is expressed in terms of number of employees) or Offeror's average annual gross revenue for the last 3 fiscal years (check this column if size standard stated in solicitation is expressed in terms of annual receipts). (Check one of the following.)

No. of Employees	Average Annual Gross Revenues
_____50 or fewer	_____$1 million or less
_____51 - 100	_____$1,000,001 - $2 million
_____101 - 250	_____$2,000,001 - $3.5 million
_____251 - 500	_____$3,500,001 - $5 million
_____501 - 750	_____$5,000,001 - $10 million
_____751 - 1,000	_____$10,000,001 - $17 million
_____Over 1,000	_____Over $17 million

15. (FARS 52.219-21) SMALL BUSINESS SIZE REPRESENTATION FOR TARGETED INDUSTRY CATEGORIES UNDER THE SMALL BUSINESS COMPETITIVENESS DEMONSTRATION PROGRAM (MAY 1999).

[Complete only if the Offeror has represented itself under the provision at 52.219-1 as a small business concern under the size standards of this solicitation.]

Offeror's number of employees for the past 12 months *[check this column if size standard stated in solicitation is expressed in terms of number of employees]* or Offeror's average annual gross revenue for the last 3 fiscal years [check this column if size standard in solicitation is expressed in terms of annual receipts]. *[Check one of the following.]*

No. of Employees	Average Annual Gross Revenues
_____50 or fewer	_____$1 million or less
_____51 - 100	_____$1,000,001 - $2 million
_____101 - 250	_____$2,000,001 - $3.5 million

_____251 - 500	_____$3,500,001 - $5 million
_____501 - 750	_____$5,000,001 - $10 million
_____751 - 1,000	_____$10,000,001 - $17 million
_____Over 1,000	_____Over $17 million

16. (FAR 52.222-21) CERTIFICATION OF NONSEGREGATED FACILITIES (FEB 1999)

(a) "Segregated facilities," as used in this clause, means any waiting rooms, work areas, rest rooms and wash rooms, restaurants and other eating areas, time clocks, locker rooms and other storage or dressing areas, parking lots, drinking fountains, recreation or entertainment areas, transportation, and housing facilities provided for employees, that are segregated by explicit directive or are in fact segregated on the basis of race, color, religion, sex, or national origin because of written or oral policies or employee custom. The term does not include separate or single-user rest rooms or necessary dressing or sleeping areas provided to assure privacy between the sexes.

(b) The Contractor agrees that it does not and will not maintain or provide for its employees any segregated facilities at any of its establishments, and that it does not and will not permit its employees to perform their services at any location under its control where segregated facilities are maintained. The Contractor agrees that a breach of this clause is a violation of the Equal Opportunity clause in this contract.

(c) The Contractor shall include this clause in every subcontract and purchase order that is subject to the Equal Opportunity clause of this contract.

(End of clause)

17. (FAR 52.222-22) PREVIOUS CONTRACTS AND COMPLIANCE REPORTS (FEB 1999)

The offeror represents that—

(a) It [ ] has, [ ] has not participated in a previous contract or subcontract subject the Equal Opportunity clause of this solicitation;

(b) It [ ] has, [ ] has not filed all required compliance reports; and

(c) Representations indicating submission of required compliance reports, signed by proposed subcontractors, will be obtained before subcontract awards.

(End of provision)

18. (FAR 52.223-4) RECOVERED MATERIAL CERTIFICATION (OCT1997)

As required by the Resource Conservation and Recovery Act of 1976 (42 U.S.C. 6962(c)(3)(A)(i)), the offeror certifies, by signing this offer, that the percentage of recovered materials to be used in the performance of the contract will be at least the amount required by the applicable contract specifications.

(End of provision)

19. (FAR 52.223-13) CERTIFICATION OF TOXIC CHEMICAL RELEASE REPORTING (OCT 2000) [For Contracts over $100,000]

(a) Submission of this certification is a prerequisite for making or entering into this contract imposed by Executive Order 12969, August 8, 1995.

(b) By signing this offer, the offeror certifies that-

(1) As the owner or operator of a facilities that will be used in the performance of this contract that are subject to the filing and reporting requirements described in section 313 of the Emergency Planning and Community Right -to-Know Act of 1986 (EPCRA) (42 U.S.C. 11023) and section 6607 of the Pollution Prevention Act of 1990 (PPA) (42 U.S.C. 13106), the offeror will file and continue to file, for such facilities for the life of the contract the Toxic Chemical Release Inventory Form (Form R) as described in sections 313(a) and (g) of the EPCRA and section 6607 of PPA; or

(2) None of its owned or operated facilities to be used in the performance of this contract is subject the Form R filing and reporting requirements because each facility is exempt for at least one of the following reasons: (Check each block that is applicable.)

[ ] (i) The facility does not manufacture, process or otherwise use any toxic chemicals listed under section 313(c) of EPCRA, 42 U.S.C. 11023(c);

[ ] (ii) The facility does not have 10 or more full-time employees as specified in section 313(b)(1)(A) of EPCRA, 42 U.S.C. 11023(b)(1)(A);

[ ] (iii) The facility does not meet the reporting thresholds of toxic chemicals established under section 313(f) of EPCRA, 42 U.S.C. 11023(f) (including the alternate thresholds at 40 CFR 372.27, provided an appropriate certification form has been filed with EPA);

[ ] (iv) The facility does not fall within Standard Industrial Classification Code (SIC) major groups 20 through 39 or their corresponding North American Industry Classification System (NAICS) sectors 31 through 33; or

[ ] (v) The facility is not located within any State of the United States, the District of Columbia, the Commonwealth of Puerto Rica, Guam, American Samoa, the United States Virgin Islands, the Norther Mariana Islands, or any other territory or possession over which the United States has jurisdiction.

20. (DFARS 252.225-7031) SECONDARY ARAB BOYCOTT OF ISRAEL (JUN 1992)

(a) Definitions. As used in this clause--

(1) "Foreign person" means any person other than a United States person as defined in Section 16(2) of the Export Administration Act of 1979 (50 U.S.C. App. Sec 2415).

(2) "United States person" is defined in Section 16(2) of the Export Administration Act of 1979 and means any United States resident or national (other than an individual resident outside the United States and employed by other than a United States person), any domestic concern (including any permanent domestic establishment of any foreign concern), and any foreign subsidiary or affiliate (including any foreign establishment) of any domestic concern which is controlled in fact by such domestic concern, as determined under regulations of the President.

(b) Certification.

By submitting this offer, the Offeror, if a foreign person, company, company or entity, certifies that it--

(1) Does not comply with the Secondary Arab Boycott of Israel; and

(2) Is not taking or knowingly agreeing to take any action, with respect to the Secondary Boycott of Israel by Arab countries, which 50 U.S.C. App. Sec 2407(a) prohibits a United States person from taking.

(End of clause)

21. (DFARS 252.247-7022) REPRESENTATION OF EXTENT OF TRANSPORTATION BY SEA (AUG 1992).

(a) The Offeror shall indicate by checking the appropriate blank in paragraph (b) of this provision whether transportation of supplies by sea is anticipated under the resultant contract. The term "supplies" is defined in the Transportation of Supplies by Sea clause of this solicitation.

(b) REPRESENTATION. The Offeror represents that it-

_____ Does anticipate that supplies will be transported by sea in the performance of any contract or subcontract resulting from this solicitation.

_____ Does not anticipate that supplies will be transported by sea in the performance of any contract or subcontract resulting from this solicitation.

(c) Any contract resulting from this solicitation will include the Transportation of Supplies by Sea Clause. If the Offeror represents that it will not use ocean transportation, the resulting contract will also include the Defense FAR Supplement clause at 252.247-7024, Notification of Transportation of Supplies by Sea.

SECTION 00700

CONTRACT CLAUSES

INDEX

* - CONTRACT CLAUSES THAT MAY BE INCORPORATED BY REFERENCE

1. FAR 52.252-2 CLAUSES INCORPORATED BY REFERENCE (FEB 1998)
2. DFARS 252.201-7000 CONTRACTING OFFICER'S REPRESENTATIVE (DEC 1991)
3. *FAR 52.202-1 DEFINITIONS (DEC 2001) ALTERNATE I (MAR 2001)
4. *FAR 52.203-3 GRATUITIES (APR 1984)
5. *FAR 52.203-5 COVENANT AGAINST CONTINGENT FEES (APR 1984)
6. *FAR 52.203-7 ANTI-KICKBACK PROCEDURES (JUL 1995)
7. *FAR 52.203-8 CANCELLATION, RESCISSION, AND RECOVERY OF FUNDS FOR ILLEGAL OR IMPROPER ACTIVITY (JAN 1997)
8. DFARS 252.203-7001 PROHIBITION ON PERSONS CONVICTED OF FRAUD OR OTHER DEFENSE—CONTRACT-RELATED FELONIES (MARCH 1999)
9. DFARS 252.203-7002 DISPLAY OF DOD HOTLINE POSTER (DEC 1991) (For Military Contracts Exceeding $5,000,000)
10. *FAR 52.203-10 PRICE OR FEE ADJUSTMENT FOR ILLEGAL OR IMPROPER ACTIVITY (JAN 1997)
11. *FAR 52.203-12 LIMITATION ON PAYMENTS TO INFLUENCE CERTAIN FEDERAL TRANSACTIONS (JUN 1997)
12. *FAR 52.204-4 PRINTED OR COPIED DOUBLE-SIDED ON RECYCLED PAPER (AUG 2000)
13. DFARS 252.204-7003 CONTROL OF GOVERNMENT PERSONNEL WORK PRODUCT (APR 1992)
14. *FAR 52.209-6 PROTECTING THE GOVERNMENTS INTEREST WHEN SUBCONTRACTING WITH CONTRACTORS DEBARRED, SUSPENDED, OR PROPOSED FOR DEBARMENT (JUL 1995)
15. DFARS 252.209-7004 SUBCONTRACTING WITH FIRMS THAT ARE OWNED OR CONTROLLED BY THE GOVERNMENT OF A TERRORIST COUNTRY (MAR 1998)
16. *FAR 52.211-15 DEFENSE PRIORITY AND ALLOCATION REQUIREMENTS (SEP 1990) [For Military Contract's Only]
17. FAR 52.211-18 VARIATION IN ESTIMATED QUANTITY (APR 1984)
18. *FAR 52.214-26 AUDIT AND RECORDS--SEALED BIDDING (OCT 1997)
19. *FAR 52.214-27 PRICE REDUCTION FOR DEFECTIVE COST OR PRICING DATA—MODIFICATIONS--SEALED BIDDING (OCT 1997)
20. *FAR 52.214-28 SUBCONTRACTOR COST OR PRICING DATA--MODIFICATIONS—SEALED BIDDING (OCT 1997)
21. *FAR 52.219-4 NOTICE OF PRICE EVALUATION PREFERENCE FOR HUBZONE SMALL BUSINESS CONCERNS (JAN 1999)
22. *FAR 52.219-8 UTILIZATION OF SMALL BUSINESS CONCERNS (OCT 2000)
23. *FAR 52.219-9 SMALL BUSINESS SUBCONTRACTING PLAN (JAN 2002) [When Contracting By Negotiations]
24. *FAR 52.219-9 SMALL BUSINESS SUBCONTRACTING PLAN (JAN 2002) --ALTERNATE I (OCT 2001) [When Contracting By Sealed Bidding]
25. DFARS 252.219-7009 SECTION 8(a) DIRECT AWARD (JUN 1998) [When Competitive 8(a) Contracting Procedures are used]
26. *FAR 52.219-14 LIMITATIONS ON SUBCONTRACTING (DEC 1996) [For Small Business Set Aside Only]
27. *FAR 52.219-16 LIQUIDATED DAMAGES-SUBCONTRACTING PLAN (JAN 1999)

28. DFARS 252.219-7010 ALTERNATE A (JUN 1998) [When Competitive 8(a) Contracting Procedures are used]
29. FAR 52.219-18 NOTIFICATION OF COMPETITION LIMITED TO ELIGIBLE 8(A) CONCERNS (JUNE 1999) [When Competitive 8(a) Contracting Procedures are used]
30. DFARS 252.219-7003 SMALL, SMALL DISADVANTAGED AND WOMEN-OWNED SMALL BUSINESS SUBCONTRACTING PLAN (DOD CONTRACTS) (APR 1996)
31. DFARS 252.219-7004 SMALL, SMALL DISADVANTAGED AND WOMEN-OWNED SMALL BUSINESS SUBCONTRACTING PLAN (TEST PROGRAM) (JUN 1997)
32. *FAR 52.222-3 CONVICT LABOR (AUG 1996)
33. *FAR 52.222-4 CONTRACT WORK HOURS AND SAFETY STANDARDS ACT—OVERTIME COMPENSATION (SEPT 2000)
34. *FAR 52.222-6 DAVIS-BACON ACT (FEB 1995)
35. *FAR 52.222-7 WITHHOLDING OF FUNDS (FEB 1988)
36. *FAR 52.222-8 PAYROLLS AND BASIC RECORDS (FEB 1988)
37. *FAR 52.222-9 APPRENTICES AND TRAINEES (FEB 1988)
38. *FAR 52.222-10 COMPLIANCE WITH COPELAND ACT REQUIREMENTS (FEB 1988)
39. *FAR 52.222-11 SUBCONTRACTS (LABOR STANDARDS) (FEB1988)
40. *FAR 52.222-12 CONTRACT TERMINATION--DEBARMENT (FEB 1988)
41. *FAR 52.222-13 COMPLIANCE WITH DAVIS-BACON AND RELATED ACT REGULATIONS (FEB 1988)
42. *FAR 52.222-14 DISPUTES CONCERNING LABOR STANDARDS (FEB 1988)
43. *FAR 52.222-15 CERTIFICATION OF ELIGIBILITY (FEB 1988)
44. *FAR 52.222-26 EQUAL OPPORTUNITY (FEB 1999)
45. *FAR 52.222-27 AFFIRMATIVE ACTION COMPLIANCE REQUIREMENTS FOR CONSTRUCTION (FEB 1999)
46. *FAR 52.222-35 EQUAL OPPORTUNITY FOR SPECIAL DISABLED VETERANS, VETERANS OF THE VIETNAM ERA, AND OTHER ELIGIBLE VETERANS (DEC 2001)
47. *FAR 52.222-36 AFFIRMATIVE ACTION FOR WORKERS WITH DISABILITIES (JUN 1998)
48. *FAR 52.222-37 EMPLOYMENT REPORTS ON SPECIAL DISABLED VETERANS, VETERANS OF THE VIETNAM ERA, AND OTHER ELIGIBLE VETERANS (DEC 2001)
49. *FAR 52.222-38 COMPLIANCE WITH VETERANS' EMPLOYMENT REPORTING REQUIREMENTS (DEC 2001)
50. *FAR 52.223-5 POLLUTION PREVENTION AND RIGHT-TO-KNOW INFORMATION (APR 1998) [For Work on Federal Facilities]
51. *FAR 52.223-6 DRUG-FREE WORKPLACE (MAY 2001)
52. FAR 52.223-9 ESTIMATE OF PERCENTAGE OF RECOVERED MATERIAL CONTENT FOR EPA-DESIGNATED PRODUCTS (AUG 2000) [For Contracts exceeding $100,000. EPA Designated product (available at http://www.epa.gov/cpg/)]
53. *FAR 52.223-14 TOXIC CHEMICAL RELEASE REPORTING (OCT 2000) [For Contracts Over $100,000]
54. RESERVED
55. DFARS 252.223-7006 PROHIBITION ON STORAGE AND DISPOSAL OF TOXIC AND HAZARDOUS MATERIALS (APR 1993)
56. *FAR 52.225-9 BUY AMERICAN ACT—BALANCE OF PAYMENT PROGRAM—CONSTRUCTION MATERIALS (FEB 2002) (For Contracts less than $6.806 million)
57. *FAR 52.225-10 NOTICE OF BUY AMERICAN ACT/BALANCE OF PAYMENTS PROGRAM REQUIREMENT—CONSTRUCTION MATERIALS (FEB 2000) (Applicable with FAR 52.225-9)
58. *FAR 52.225-11 BUY AMERICAN ACT—BALANCE OF PAYMENTS PROGRAM-CONSTRUCTION MATERIALS UNDER TRADE AGREEMENTS (FEB 2002) [For Contracts more than $6,806,000] ALTERNATE I (JUNE 2000) [For Contracts between $6.806 and 7.068419 Million]
59. *FAR 52.225-12 NOTICE OF BUY AMERICAN ACT/BALANCE OF PAYMENTS PROGRAM REQUIREMENT—CONSTRUCTION MATERIALS UNDER TRADE AGREEMENTS (FEB 2000) [Applicable with FAR 52.225-11]] Alternate II (June 2000) [For Contracts Between 6.806 and 7.068419 Million]
60. *FAR 52.225-13 RESTRICTIONS ON CERTAIN FOREIGN PURCHASES (JULY 2000)

61. *FAR 52.226-1 UTILIZATION OF INDIAN ORGANIZATIONS AND INDIAN-OWNED ECONOMIC ENTERPRISES (JUNE 2000)
62. *FAR 52.227-1 AUTHORIZATION AND CONSENT (JUL 1995)
63. *FAR 52.227-2 NOTICE AND ASSISTANCE REGARDING PATENT AND COPYRIGHT INFRINGEMENT (AUG 1996)
64. *FAR 52.227-4 PATENT INDEMNITY--CONSTRUCTION CONTRACTS (APR 1984)
65. DFARS 252.227-7033 RIGHTS IN SHOP DRAWINGS (APR 1966)
66. FAR 52.228-1 BID GUARANTEE (SEP 1996) [NOTE: Not required for projects less than $100,000]
67. *FAR 52.228-2 ADDITIONAL BOND SECURITY (OCT 1997)
68. *FAR 52.228-5 INSURANCE--WORK ON A GOVERNMENT INSTALLATION (JAN 1997) [For Contracts Exceeding $100,000]
69. *FAR 52.228-11 PLEDGES OF ASSETS (FEB 1992)
70. *FAR 52.228-12 PROSPECTIVE SUBCONTRACTOR REQUESTS FOR BONDS (OCT 1995)
71. FAR 52.228-13 ALTERNATIVE PAYMENT PROTECTIONS (JULY 2000) [Applicable only for projects or delivery orders less than $100,000]
72. FAR 52.228-14 IRREVOCABLE LETTER OF CREDIT (DEC 1999)
73. FAR 52.228-15 PERFORMANCE AND PAYMENT BONDS (JULY 2000).
74. FAR 52.229-3 FEDERAL, STATE, AND LOCAL TAXES (JAN 1991) [For Contracts Exceeding $100,000]
75. *FAR 52.229-5 TAXES--CONTRACTS PERFORMED IN U.S. POSSESSIONS OR PUERTO RICO (APR 1984)
76. DFARS 252.231-7000 SUPPLEMENTAL COST PRINCIPLES (DEC 1991)
77. *FAR 52.232-5 PAYMENTS UNDER FIXED-PRICE CONSTRUCTION CONTRACTS (MAY
77. 1997)
78. RESERVED.
79. *FAR 52.232-17 INTEREST (JUN 1996)
80. *FAR 52.232-23 ASSIGNMENT OF CLAIMS (JAN 1986)
81. *FAR 52.232-27 PROMPT PAY FOR CONSTRUCTION CONTRACTS (FEB 2002)
82. *FAR 52.232-33 PAYMENT BY ELECTRONIC FUNDS TRANSFER –CENTRAL CONTRACTOR REGISTRATION (MAY 1999)
83. DFARS 252.232-7004 DOD PROGRESS PAYMENT RATES (OCT 2001)
84. DFARS 252.232-7005 REIMBURSEMENT OF SUBCONTRACTOR ADVANCE PAYMENTS--DOD PILOT MENTOR-PROTEGE PROGRAM (SEP 2001)
85. *FAR 52.233-1 DISPUTES (DEC 1998)
86. *FAR 52.233-3 PROTEST AFTER AWARD (AUG 1996)
87. RESERVED
88. FAR 52.236-2 DIFFERING SITE CONDITIONS (APR 1984)
89. *FAR 52.236-3 SITE INVESTIGATION AND CONDITIONS AFFECTING THE WORK (APR 1984)
90. *FAR 52.236-5 MATERIAL AND WORKMANSHIP (APR 1984)
91. *FAR 52.232-33 PAYMENT BY ELECTRONIC FUNDS TRANSFER –CENTRAL CONTRACTOR REGISTRATION (MAY 1999)
92. *FAR 52.236-6 SUPERINTENDENCE BY THE CONTRACTOR (APR 1984)
93. FAR 52.236-7 PERMITS AND RESPONSIBILITIES (NOV 1991)
94. *FAR 52.236-8 OTHER CONTRACTS (APR 1984)
95. *FAR 52.236-9 PROTECTION OF EXISTING VEGETATION, STRUCTURES, EQUIPMENT, UTILITIES, AND IMPROVEMENTS (APR 1984)
96. *FAR 52.236-10 OPERATIONS AND STORAGE AREAS (APR 1984)
97. *FAR 52.236-11 USE AND POSSESSION PRIOR TO COMPLETION (APR 1984)
98. *FAR 52.236-12 CLEANING UP (APR 1984)
99. *FAR 52.236-13 ACCIDENT PREVENTION-ALTERNATE I (NOV 1991)
100. *FAR 52.236-14 AVAILABILITY AND USE OF UTILITY SERVICES (APR 1984)
101. FAR 52.236-15 SCHEDULES FOR CONSTRUCTION CONTRACTS (APR 1984)
102. *FAR 52.236-17 LAYOUT OF WORK (APR 1984)
103. FAR 52.236-21 SPECIFICATIONS AND DRAWINGS FOR CONSTRUCTION (FEB 1997)
104. *FAR 52.236-26 PRECONSTRUCTION CONFERENCE (FEB 1995)

105. DFARS 252.236-7000 MODIFICATION OF PROPOSALS - PRICE BREAKDOWN (DEC 1991)
106. DFARS 252.236-7008 CONTRACT PRICES - BIDDING SCHEDULES (DEC 1991)
107. *FAR 52.242-13 BANKRUPTCY (JUL 1995)
108. *FAR 52.242-14 SUSPENSION OF WORK (APR 1984)
109. FAR 52.243-4 CHANGES (AUG 1987)
110. DFARS 252.243-7001 PRICING OF CONTRACT MODIFICATIONS (DEC 1991)
111. DFARS 252.243-7002 REQUESTS FOR EQUITABLE ADJUSTMENT (MAR 1998)
112. *FAR 52.244-2 SUBCONTRACTS (AUG 1998)
113. FAR 52.244-6 SUBCONTRACTS FOR COMMERCIAL ITEMS (MAY 2001)
114. *FAR 52.245-2 GOVERNMENT PROPERTY (FIXED-PRICE CONTRACTS) (DEC 1989) [For Government Property over $100,000]
115. *FAR 52.245-4 GOVERNMENT-FURNISHED PROPERTY (SHORT FORM) (APR 1984) [For Government Property $100,000 or Less]
116. *FAR 52.246-12 INSPECTION OF CONSTRUCTION (AUG 1996)
117. *FAR 52.246-21 WARRANTY OF CONSTRUCTION (MAR 1994)
118. DFARS 252.247-7023 TRANSPORTATION OF SUPPLIES BY SEA (MAR 2000)
119. DFARS 252.247-7024 NOTIFICATION OF TRANSPORTATION OF SUPPLIES BY SEA (MAR 2000)
120. FAR 52.248-3 VALUE ENGINEERING--CONSTRUCTION (FEB 2000) (ALERNATE I (APR 1984)
121. *FAR 52.249-1 TERMINATION FOR CONVENIENCE OF THE GOVERNMENT (FIXED-PRICE) (SHORT FORM) (APR 1984) [For Contracts $100,000 or Less]
122. *FAR 52.249-2 TERMINATION FOR CONVENIENCE OF THE GOVERNMENT (FIXED-PRICE) ALTERNATE I (SEP 1996) [For Contracts Over $100,000]
123. *FAR 52.249-10 DEFAULT (FIXED-PRICE CONSTRUCTION) (APR 1984)
124. ENVIRONMENTAL LITIGATION (1974 NOV OCE)
125. EFARS 52.249-5000 BASIS FOR SETTLEMENT OF PROPOSALS
126. INAPPLICABLE PROVISIONS AND CLAUSES (Local Provision). [Applicable only for projects or delivery orders less than $100,000]

SECTION 00700

CONTRACT CLAUSES

1. FAR 52.252-2 CLAUSES INCORPORATED BY REFERENCE (FEB 1998)

This contract incorporates one or more clauses by reference, with the same force and effect as if they were given in full text. Upon request, the Contracting Officer will make their full text available. Also, the full text of a clause may be accessed electronically at this/these address(es):

http://www.arnet.gov/far

(End of clause)

* - CONTRACT CLAUSES THAT MAY BE INCORPORATED BY REFERENCE

2. DFARS 252.201-7000 CONTRACTING OFFICER'S REPRESENTATIVE (DEC 1991)

(a) Definition.

"Contracting officer's representative" means an individual designated in accordance with subsection 201.602-2 of the Defense Federal Acquisition Regulation Supplement and authorized in writing by the contracting officer to perform specific technical or administrative functions.

(b) If the Contracting Officer designates a contracting officer's representative (COR), the Contractor will receive a copy of the written designation. It will specify the extent of the COR's authority to act on behalf of the contracting officer. The COR is not authorized to make any commitments or changes that will affect price, quality, quantity, delivery, or any other term or condition of the contract.

(End of clause)

3. *FAR 52.202-1 DEFINITIONS (DEC 2001) ALTERNATE I (MAR 2001)

a) "Agency head" or "head of the agency" means the Secretary (Attorney General, Administrator, Governor, Chairperson, or other chief official, as appropriate) of the agency, unless otherwise indicated, including any deputy or assistant chief official of the executive agency.

(b) "Commercial component" means any component that is a commercial item.

(c) "Commercial item" means—

(1) Any item, other than real property, that is of a type customarily used by the general public or by non-governmental entities for purposes other than governmental purposes, and that—

(i) Has been sold, leased, or licensed to the general public; or

(ii) Has been offered for sale, lease, or license to the general public;

(2) Any item that evolved from an item described in paragraph (c)(1) of this clause through advances in technology or performance and that is not yet available in the commercial marketplace, but will be available in the commercial marketplace in time to satisfy the delivery requirements under a Government solicitation;

(3) Any item that would satisfy a criterion expressed in paragraphs (c)(1) or (c)(2) of this clause, but for—

(i) Modifications of a type customarily available in the commercial marketplace; or

(ii) Minor modifications of a type not customarily available in the commercial marketplace made to meet Federal Government requirements. "Minor" modifications means modifications that do not significantly alter the nongovernmental function or essential physical characteristics of an item or component, or

change the purpose of a process. Factors to be considered in determining whether a modification is minor include the value and size of the modification and the comparative value and size of the final product. Dollar values and percentages may be used as guideposts, but are not conclusive evidence that a modification is minor;

(4) Any combination of items meeting the requirements of paragraphs (c)(1), (2), (3), or (5) of this clause that are of a type customarily combined and sold in combination to the general public;

(5) Installation services, maintenance services, repair services, training services, and other services if—

(i) Such services are procured for support of an item referred to in paragraph (c)(1), (2), (3), or (4) of this definition, regardless of whether such services are provided by the same source or at the same time as the item; and

(ii) The source of such services provides similar services contemporaneously to the general public under terms and conditions similar to those offered to the Federal Government

(6) Services of a type offered and sold competitively in substantial quantities in the commercial marketplace based on established catalog or market prices for specific tasks performed under standard commercial terms and conditions. This does not include services that are sold based on hourly rates without an established catalog or market price for a specific service performed. For purposes of these services—

(i) "Catalog price" means a price included in a catalog, price list, schedule, or other form that is regularly maintained by the manufacturer or vendor, is either published or otherwise available for inspection by customers, and states prices at which sales are currently, or were last, made to a significant number of buyers constituting the general public; and

(ii) "Market prices" means current prices that are established in the course of ordinary trade between buyers and sellers free to bargain and that can be substantiated through competition or from sources independent of the offerors.

(7) Any item, combination of items, or service referred to in paragraphs (c)(1) through (c)(6), notwithstanding the fact that the item, combination of items, or service is transferred between or among separate divisions, subsidiaries, or affiliates of a Contractor; or

(8) A nondevelopmental item, if the procuring agency determines the item was developed exclusively at private expense and sold in substantial quantities, on a competitive basis, to multiple State and local Governments.

(d) "Component" means any item supplied to the Government as part of an end item or of another component, except that for use in 52.225-9, and 52.225-11 see the definitions in 52.225-9(a) and 52.225-11(a).

(e) "Contracting Officer" means a person with the authority to enter into, administer, and/or terminate contracts and make related determinations and findings. The term includes certain authorized representatives of the Contracting Officer acting within the limits of their authority as delegated by the Contracting Officer.

(f) "Nondevelopmental item" means—

(1) Any previously developed item of supply used exclusively for governmental purposes by a Federal agency, a State or local government, or a foreign government with which the United States has a mutual defense cooperation agreement;

(2) Any item described in paragraph (f)(1) of this definition that requires only minor modification or modifications of a type customarily available in the commercial marketplace in order to meet the requirements of the procuring department or agency; or

(3) Any item of supply being produced that does not meet the requirements of paragraph (f)(1) or (f)(2) solely because the item is not yet in use.

(End of clause)

4. *FAR 52.203-3 GRATUITIES (APR 1984)

(a) The right of the Contractor to proceed may be terminated by written notice if, after notice and hearing, the agency head or a designee determines that the Contractor, its agent, or another representative--

(1) Offered or gave a gratuity (e.g., an entertainment or gift) to an officer, official, or employee of the Government; and

(2) Intended, by the gratuity, to obtain a contract or favorable treatment under a contract.

(b) The facts supporting this determination may be reviewed by any court having lawful jurisdiction.

(c) If this contract is terminated under paragraph (a) above, the Government is entitled--

(1) To pursue the same remedies as in a breach of the contract; and

(2) In addition to any other damages provided by law, to exemplary damages of not less than 3 nor more than 10 times the cost incurred by the Contractor in giving gratuities to the person concerned, as determined by the agency head or a designee. (This subparagraph (c)(2) is applicable only if this contract uses money appropriated to the Department of Defense.)

(d) The rights and remedies of the Government provided in this clause shall not be exclusive and are in addition to any other rights and remedies provided by law or under this contract.

5. *FAR 52.203-5 COVENANT AGAINST CONTINGENT FEES (APR 1984)

(a) The Contractor warrants that no person or agency has been employed or retained to solicit or obtain this contract upon an agreement or understanding for a contingent fee, except a bona fide employee or agency. For breach or violation of this warranty, the Government shall have the right to annul this contract without liability or, in its discretion, to deduct from the contract price or consideration, or otherwise recover, the full amount of the contingent fee.

(b) "Bona fide agency," as used in this clause, means an established commercial or selling agency, maintained by a contractor for the purpose of securing business, that neither exerts nor proposes to exert improper influence to solicit or obtain Government contracts nor holds itself out as being able to obtain any Government contract or contracts through improper influence.

"Bona fide employee," as used in this clause, means a person, employed by a contractor and subject to the contractor's supervision and control as to time, place, and manner of performance, who neither exerts nor proposes to exert improper influence to solicit or obtain Government contracts nor holds out as being able to obtain any Government contract or contracts through improper influence.

"Contingent fee," as used in this clause, means any commission, percentage, brokerage, or other fee that is contingent upon the success that a person or concern has in securing a Government contract.

"Improper influence," as used in this clause, means any influence that induces or tends to induce a Government employee or officer to give consideration or to act regarding a Government contract on any basis other than the merits of the matter.

6. *FAR 52.203-7 ANTI-KICKBACK PROCEDURES (JUL 1995)

(a) Definitions.

"Kickback," as used in this clause, means any money, fee, commission, credit, gift, gratuity, thing of value, or compensation of any kind which is provided, directly or indirectly, to any prime Contractor, prime Contractor employee, subcontractor, or subcontractor employee for the purpose of improperly obtaining or rewarding favorable treatment in connection with a prime contract or in connection with a subcontract relating to a prime contract. "Person," as used in this clause, means a corporation, partnership, business association of any kind, trust, joint-stock company, or individual.

"Prime contract," as used in this clause, means a contract or contractual action entered into by the United States for the purpose of obtaining supplies, materials, equipment, or services of any kind.

"Prime Contractor," as used in this clause, means a person who has entered into a prime contract with the United States.

"Prime Contractor employee," as used in this clause, means any officer, partner, employee, or agent of a prime Contractor.

"Subcontract," as used in this clause, means a contract or contractual action entered into by a prime Contractor or subcontractor for the purpose of obtaining supplies, materials, equipment, or services of any kind under a prime contract.

"Subcontractor," as used in this clause, (1) means any person, other than the prime Contractor, who offers to furnish or furnishes any supplies, materials, equipment, or services of any kind under a prime contract or a

subcontract entered into in connection with such prime contract, and (2) includes any person who offers to furnish or furnishes general supplies to the prime Contractor or a higher tier subcontractor.

"Subcontractor employee," as used in this clause, means any officer, partner, employee, or agent of a subcontractor.

(b) The Anti-Kickback Act of 1986 (41 U.S.C. 51-58) (the Act), prohibits any person from--

(1) Providing or attempting to provide or offering to provide any kickback;

(2) Soliciting, accepting, or attempting to accept any kickback; or

(3) Including, directly or indirectly, the amount of any kickback in the contract price charged by a prime Contractor to the United States or in the contract price charged by a subcontractor to a prime Contractor or higher tier subcontractor.

(c) (1) The Contractor shall have in place and follow reasonable procedures designed to prevent and detect possible violations described in paragraph (b) of this clause in its own operations and direct business relationships.

(2) When the Contractor has reasonable grounds to believe that a violation described in paragraph (b) of this clause may have occurred, the Contractor shall promptly report in writing the possible violation. Such reports shall be made to the inspector general of the contracting agency, the head of the contracting agency if the agency does not have an inspector general, or the Department of Justice.

(3) The Contractor shall cooperate fully with any Federal agency investigating a possible violation described in paragraph (b) of this clause.

(4) The Contracting Officer may

(i) offset the amount of the kickback against any monies owed by the United States under the prime contract and/or

(ii) direct that the Prime Contractor withhold from sums owed a subcontractor under the prime contract the amount of the kickback. The Contracting Officer may order that monies withheld under subdivision (c)(4)(ii) of this clause be paid over to the Government unless the Government has already offset those monies under subdivision (c)(4)(i) of this clause. In either case, the Prime Contractor shall notify the Contracting Officer when the monies are withheld.

(5) The Contractor agrees to incorporate the substance of this clause, including subparagraph (c)(5) but excepting subparagraph (c)(1), in all subcontracts under this contract which exceed $100,000.

7. *FAR 52.203-8 CANCELLATION, RESCISSION, AND RECOVERY OF FUNDS FOR ILLEGAL OR IMPROPER ACTIVITY (JAN 1997)

(a) If the Government receives information that a contractor or a person has engaged in conduct constituting a violation of subsection (a), (b), (c), or (d) of Section 27 of the Office of Federal Procurement Policy Act (41 U.S.C. 423) (the Act), as amended by section 4304 of the National Defense Authorization Act for Fiscal Year 1996 (Pub. L. 104-106), the Government may--

(1) Cancel the solicitation, if the contract has not yet been awarded or issued; or

(2) Rescind the contract with respect to which--

(i) The Contractor or someone acting for the Contractor has been convicted for an offense where the conduct constitutes a violation of subsection 27 (a) or (b) of the Act for the purpose of either--

(A) Exchanging the information covered by such subsections for anything of value; or

(B) Obtaining or giving anyone a competitive advantage in the award of a Federal agency procurement contract; or

(ii) The head of the contracting activity has determined, based upon a preponderance of the evidence, that the Contractor or someone acting for the Contractor has engaged in conduct constituting an offense punishable under subsection 27(e)(1) of the Act.

(b) If the Government rescinds the contract under paragraph (a) of this clause, the Government is entitled to recover, in addition to any penalty prescribed by law, the amount expended under the contract.

(c) The rights and remedies of the Government specified herein are not exclusive, and are in addition to any other rights and remedies provided by law, regulation, or under this contract.

8. DFARS 252.203-7001 PROHIBITION ON PERSONS CONVICTED OF FRAUD OR OTHER DEFENSE—CONTRACT-RELATED FELONIES (MARCH 1999)

(a) Definitions.

As used in this clause--

(1) "Arising out of a contract with the "DoD" means any any act in connection with--

(i) Attempting to obtain;

(ii) Obtaining; or

(iii) Performing a contract or first-tier subcontract of any department, or component of the Department of Defense (DoD).

(2) "Conviction of fraud or any other felony," means any conviction for fraud or a felony in violation of state or Federal criminal statutes, whether entered on a verdict or plea, including a plea of nolo contendere, for which sentence has been imposed.

(3) "Date of conviction," means the date judgement was entered against the individual.

(b) Any individual who is convicted after September 29, 1988 of fraud or any other felony arising out of a contract with the DoD is prohibited from serving--

(1) In a management or supervisory capacity on any DoD contract or first-tier subcontract;

(2) On board of directors of any DoD Contractor or first-tier subcontractor;

(3) As a consultant to any DoD Contractor or first-tier subcontractor; or

(4) In any other capacity with the authority to influence, advise, or control the decisions of any DoD contractor or subcontractor with regard to any DoD contract or first-tier subcontract.

(c) Unless waived, the prohibition in paragraph (b) of this clause applies for not less than five years from the date of conviction.

(d) 10 U.S.C. 2408 provides that a defense Contractor or first-tier subcontractor shall be subject to a criminal penalty of not more than $500,000 if convicted of knowingly--

(1) Employing a person under a prohibition in paragraph (b) of this clause ;

(2) Allowing such a person to serve on the board of directors of Contractor or first-tier subcontractor.

(e) In addition to the criminal penalties contained in 10 U.S.C. 2408, the Government may consider other available remedies, such as--

(1) Suspension or debarment;

(2) Cancellation of the contract at no cost to the Government; or

(3) Termination of the contract for default.

(f) The Contractor may submit written requests for waiver of the prohibition in paragraph (b) of this clause to the Contracting Officer. Requests shall clearly identify--

(1) The person involved;

(2) The nature of the conviction and resultant sentence or punishment imposed ;

(3) The reasons for the requested waiver; and

(4) An explanation of why a waiver is in the interest of national security.

(g) The Contractor agrees to include the substance of this clause appropriately modified to reflect the identity and relationship of the parties, in all first-tier subcontracts exceeding the simplified acquisition threshold in Part 2 of the Federal Acquisition Regulation, except those for commercial items or components.

(h) Pursuant to 10 U.S.C.2408(c), defense contractors and subcontractors may obtain information as to whether a particular has been convicted of fraud or any other felony arising out of a contract with the DoD by contracting The Office of Justice Programs, The Denial of Federal Benefits Office, U.S. Department of Justice, telephone (202) 616-3507.

9. DFARS 252.203-7002 DISPLAY OF DOD HOTLINE POSTER (DEC 1991) (<u>For Military Contracts Exceeding $5,000,000</u>)

(a) The Contractor shall display prominently in common work areas within business segments performing work under Department of Defense (DoD) contracts, DoD Hotline Posters prepared by DoD Office of the Inspector General.

(b) DoD Hotline Posters may be obtained from the DoD Inspector General, ATTN: Defense Hotline, 400 Army Navy Drive, Washington DC 22202-2884.

(c) The Contract need not comply with paragraph (a) of this clause if it has established a mechanism, such as a hotline, by which employees may report suspected instances of improper conduct, and instructions that encourage employees to make such reports.

10. *FAR 52.203-10 PRICE OR FEE ADJUSTMENT FOR ILLEGAL OR IMPROPERACTIVITY (JAN 1997)

(a) The Government, at its election, may reduce the price of a fixed-price type contract and the total cost and fee under a cost-type contract of profit or fee determined as set forth in paragraph (b) of this clause if the head of the contracting activity or designee determines that there was a violation of subsection 27(a), (b), or (c) of the Office of Federal Procurement Policy Act, as amended (41 U.S.C. 423), as implemented in section 3.104 of the Federal Acquisition Regulation.

(b) The price or fee reduction referred to in paragraph (a) of this clause shall be--

(1) For cost-plus-fixed-fee contracts, the amount of the fee specified in the contract at the time of award;

(2) For cost-plus-incentive-fee contracts, the target fee specified in the contract at the time of award, notwithstanding any minimum fee or "fee floor" specified in the contract;

(3) For cost-plus-award-fee contracts--

(i) The base fee established in the contract at the time of contract award;

(ii) If no base fee is specified in the contract, 30 percent of the amount of each award fee otherwise payable to the Contractor for each award fee evaluation period or at each award fee determination point.

(4) For fixed-price-incentive contracts, the Government may--

(i) Reduce the contract target price and contract target profit both by an amount equal to the initial target profit specified in the contract at the time of contract award; or

(ii) If an immediate adjustment to the contract target price and contract target profit would have a significant adverse impact on the incentive price revision relationship under the contract, or adversely affect the contract financing provisions, the Contracting Officer may defer such adjustment until establishment of the total final price of the contract. The total final price established in accordance with the incentive price revision provisions of the contract shall be reduced by an amount equal to the initial target profit specified in the contract at the time of contract award and such reduced price shall be the total final contract price.

(5) For firm-fixed-price contracts, by 10 percent of the initial contract price or a profit amount determined by the Contracting Officer from records or documents in existence prior to the date of the contract award.

(c) The Government may, at its election, reduce a prime contractor's price or fee in accordance with the procedures of paragraph (b) of this clause for violations of the Act by its subcontractors by an amount not to exceed the amount of profit or fee reflected in the subcontract at the time the subcontract was first definitively priced.

(d) In addition to the remedies in paragraphs (a) and (c) of this clause, the Government may terminate this contract for default. The rights and remedies of the Government specified herein are not exclusive, and are in addition to any other rights and remedies provided by law or under this contract.

11. *FAR 52.203-12 LIMITATION ON PAYMENTS TO INFLUENCE CERTAIN FEDERAL TRANSACTIONS (JUN 1997)

(a) Definitions.

"Agency," as used in this clause, means executive agency as defined in 2.101.

"Covered Federal Action," as used in this clause, means any of the following Federal actions:

(1) The awarding of any Federal contract.

(2) The making of any Federal grant.

(3) The making of any Federal loan.

(4) The entering into of any cooperative agreement.

(5) The extension, continuation, renewal, amendment, or modification of any Federal contract, grant, loan, or cooperative agreement.

"Indian tribe" and "tribal organization," as used in this clause, have the meaning provided in section 4 of the Indian Self-Determination and Education Assistance Act (25 U.S.C. 450B) and include Alaskan Natives.

"Influencing or attempting to influence," as used in this clause, means making, with the intent to influence, any communication to or appearance before an officer or employee of any agency, a Member of Congress, an officer or employee of Congress, or an employee of a Member of Congress in connection with any covered Federal action.

"Local government," as used in this clause, means a unit of government in a State and, if chartered, established, or otherwise recognized by a State for the performance of a governmental duty, including a local public authority, a special district, an intrastate district, a council of governments, a sponsor group representative organization, and any other instrumentality of a local government.

"Officer or employee of an agency," as used in this clause, includes the following individuals who are employed by an agency:

(1) An individual who is appointed to a position in the Government under title 5, United States Code, including a position under a temporary appointment.

(2) A member of the uniformed services, as defined in subsection 101(3), title 37, United States Code.

(3) A special Government employee, as defined in section 202, title 18, United States Code.

(4) An individual who is a member of a Federal advisory committee, as defined by the Federal Advisory Committee Act, title 5, United States Code, appendix 2.

"Person," as used in this clause, means an individual, corporation, company, association, authority, firm, partnership, society, State and local government, regardless of whether such entity is operated for profit, or not for profit. This term excludes an Indian tribe, tribal organization, or any other Indian organization with respect to expenditures specifically permitted by other Federal law.

"Reasonable compensation," as used in this clause, means, with respect to a regularly employed officer or employee of any person, compensation that is consistent with the normal compensation for such officer or employee for work that is not furnished to, not funded by, or not furnished in cooperation with the Federal Government.

"Reasonable payment," as used in this clause, means, with respect to professional and other technical services, a payment in an amount that is consistent with the amount normally paid for such services in the private sector.

"Recipient," as used in this clause, includes the Contractor and all subcontractors. This term excludes an Indian tribe, tribal organization, or any other Indian organization with respect to expenditures specifically permitted by other Federal law.

"Regularly employed," as used in this clause, means, with respect to an officer or employee of a person requesting or receiving a Federal contract, an officer or employee who is employed by such person for at least 130 working days within 1 year immediately preceding the date of the submission that initiates agency consideration of such person for receipt of such contract. An officer or employee who is employed by such person for less than 130 working days within 1 year immediately preceding the date of the submission that initiates agency consideration of such person shall be considered to be regularly employed as soon as he or she is employed by such person for 130 working days.

"State," as used in this clause, means a State of the United States, the District of Columbia, the Commonwealth of Puerto Rico, a territory or possession of the United States, an agency or instrumentality of a State, and multi-State, regional, or interstate entity having governmental duties and powers.

(b) Prohibitions.

(1) Section 1352 of title 31, United States Code, among other things, prohibits a r ecipient of a Federal Contract, grant, loan, or cooperative agreement from using appropriated funds to pay any person for influencing or attempting to influence an officer or employee of any agency, a Member of Congress, an officer or employee of Congress, or an employee of a Member of Congress in connection with any of the following covered Federal actions: The awarding of any Federal contract; the making of any Federal grant; the making of any Federal loan; the entering into of any cooperative agreement; or the modification of any Federal contract, grant, loan, or cooperative agreement.

(2) The Act also requires Contractors to furnish a disclosure if any funds other than Federal appropriated funds (including profit or fee received under a covered Federal transaction) have been paid, or will be paid, to any person for influencing or attempting to influence an officer or employee of any agency, a Member of Congress, an officer or employee of Congress, or an employee of a Member of Congress in connection with a Federal contract, grant, loan, or cooperative agreement.

(3) The prohibitions of the Act do not apply under the following conditions:

(i) Agency and legislative liaison by own employees.

(A) The prohibition on the use of appropriated funds, in subparagraph (b)(1) of this clause, does not apply in the case of a payment of reasonable compensation made to an officer or employee of a person requesting or receiving a covered Federal action if the payment is for agency and legislative liaison activities not directly related to a covered Federal action.

(B) For purposes of subdivision (b)(3)(i)(A) of this clause, providing any information specifically requested by an agency or Congress is permitted at any time.

(C) The following agency and legislative liaison activities are permitted at any time where they are not related to a specific solicitation for any covered Federal action:

(1) Discussing with an agency the qualities and characteristics (including individual demonstrations) of the person's products or services, conditions or terms of sale, and service capabilities.

(2) Technical discussions and other activities regarding the application or adaptation of the person's products or services for an agency's use.

(D) The following agency and legislative liaison activities are permitted where they are prior to formal solicitation of any covered Federal action--

(1) Providing any information not specifically requested but necessary for an agency to make an informed decision about initiation of a covered Federal action;

(2) Technical discussions regarding the preparation of an unsolicited proposal prior to its official submission; and

(3) Capability presentations by persons seeking awards from an agency pursuant to the provisions of the Small Business Act, as amended by Pub. L. 95-507, and subsequent amendments.

(E) Only those services expressly authorized by subdivision (b)(3)(i)(A) of this clause are permitted under this clause.

(ii) Professional and technical services.

(A) The prohibition on the use of appropriated funds, in subparagraph (b)(1) of this clause, does not apply in the case of--

(1) A payment of reasonable compensation made to an officer or employee f a person requesting or receiving a covered Federal action or an extension, continuation, renewal, amendment, or modification of a covered Federal action, if payment is for professional or technical services rendered directly in the preparation, submission, or negotiation of any bid, proposal, or application for that Federal action or for meeting requirements imposed by or pursuant to law as a condition for receiving that Federal action.

(2) Any reasonable payment to a person, other than an officer or employee of a person requesting or receiving a covered Federal action or an extension, continuation, renewal, amendment, or modification of a covered Federal action if the payment is for professional or technical services rendered directly in the preparation, submission, or negotiation of any bid, proposal, or application for that Federal action or for meeting requirements imposed by or pursuant to law as a condition for receiving that Federal action. Persons other than officers or employees of a person requesting or receiving a covered Federal action include consultants and trade associations.

(B) For purposes of subdivision (b)(3)(ii)(A) of this clause, "professional and technical services" shall be limited to advice and analysis directly applying any professional or technical discipline. For example, drafting of a legal document accompanying a bid or proposal by a lawyer is allowable. Similarly, technical advice provided by an engineer on the performance or operational capability of a piece of equipment rendered directly in the negotiation of a contract is allowable. However, communications with the intent to influence made by a professional (such as a licensed lawyer) or a technical person (such as a licensed accountant) are not allowable under this section unless they provide advice and analysis directly applying their professional or technical expertise and unless the advice or analysis is rendered directly and solely in the preparation, submission or

negotiation of a covered Federal action. Thus, for example, communications with the intent to influence made by a lawyer that do not provide legal advice or analysis directly and solely related to the legal aspects of his or her client's proposal, but generally advocate one proposal over another are not allowable under this section because the lawyer is not providing professional legal services. Similarly, communications with the intent to influence made by an engineer providing an engineering analysis prior to the preparation or submission of a bid or proposal are not allowable under this section since the engineer is providing technical services but not directly in the preparation, submission or negotiation of a covered Federal action.

(C) Requirements imposed by or pursuant to law as a condition for receiving a covered Federal award include those required by law or regulation and any other requirements in the actual award documents.

(D) Only those services expressly authorized by subdivisions (b)(3)(ii)(A)(1) and (2) of this clause are permitted under this clause.

(E) The reporting requirements of FAR 3.803(a) shall not apply with respect to payments of reasonable compensation made to regularly employed officers or employees of a person.

(iii) Disclosure.

(A) The Contractor who requests or receives from an agency a Federal contract shall file with that agency a disclosure form, OMB standard form LLL, Disclosure of Lobbying Activities, if such person has made or has agreed to make any payment using nonappropriated funds (to include profits from any covered Federal action), which would be prohibited under subparagraph (b)(1) of this clause, if paid for with appropriated funds.

(B) The Contractor shall file a disclosure form at the end of each calendar quarter in which there occurs any event that materially affects the accuracy of the information contained in any disclosure form previously filed by such person under subparagraph (c)(1) of this clause. An event that materially affects the accuracy of the information reported includes--

(1) A cumulative increase of $25,000 or more in the amount paid or expected to be paid for influencing or attempting to influence a covered Federal action; or

(2) A change in the person(s) or individual(s) influencing or attempting to influence a covered Federal action; or

(3) A change in the officer(s), employee(s), or Member(s) contacted to influence or attempt to influence a covered Federal action.

(C) The Contractor shall require the submittal of a certification, and if required, a disclosure form by any person who requests or receives any subcontract exceeding $100,000 under the Federal contract.

(D) All subcontractor disclosure forms (but not certifications) shall be forwarded from tier to tier until received by the prime Contractor. The prime Contractor shall submit all disclosures to the Contracting Officer at the end of the calendar quarter in which the disclosure form is submitted by the subcontractor. Each subcontractor certification shall be retained in the subcontract file of the awarding Contractor.

(iv) Agreement. The Contractor agrees not to make any payment prohibited by this clause.

(v) Penalties.

(A) Any person who makes an expenditure prohibited under paragraph (a) of this clause or who fails to file or amend the disclosure form to be filed or amended by paragraph (b) of this clause shall be subject to civil penalties as provided for by 31 U.S.C. 1352. An imposition of a civil penalty does not prevent the Government from seeking any other remedy that may be applicable.

(B) Contractors may rely without liability on the representation made by their subcontractors in the certification and disclosure form.

(vi) Cost allowability. Nothing in this clause makes allowable or reasonable any costs which would otherwise be unallowable or unreasonable. Conversely, costs made specifically unallowable by the requirements in this clause will not be made allowable under any other provision.

12. *FAR 52.204-4 PRINTED OR COPIED DOUBLE-SIDED ON RECYCLED PAPER (AUG 2000)

(a) Definitions. As used in this clause—

"Postconsumer material" means a material or finished product that has served its intended use and has been discarded for disposal or recovery, having completed its life as a consumer item. Postconsumer material is a part of the broader category of "recovered material." For paper and paper products, postconsumer material means "postconsumer fiber" defined by the U.S. Environmental Protection Agency (EPA) as—

(1) Paper, paperboard, and fibrous materials from retail stores, office buildings, homes, and so forth, after they have passed through their end-usage as a consumer item, including: used corrugated boxes; old newspapers; old magazines; mixed waste paper; tabulating cards; and used cordage; or

(2) All paper, paperboard, and fibrous materials that enter and are collected from municipal solid waste; but not

(3) Fiber derived from printers' over-runs, converters' scrap, and over-issue publications.

"Printed or copied double-sided" means printing or reproducing a document so that information is on both sides of a sheet of paper.

"Recovered material," for paper and paper products, is defined by EPA in its Comprehensive Procurement Guideline as "recovered fiber" and means the following materials:

(1) Postconsumer fiber; and

(2) Manufacturing wastes such as—

(i) Dry paper and paperboard waste generated after completion of the papermaking process (that is, those manufacturing operations up to and including the cutting and trimming of the paper machine reel into smaller rolls or rough sheets) including: envelope cuttings, bindery trimmings, and other paper and paperboard waste resulting from printing, cutting, forming, and other converting operations; bag, box, and carton manufacturing wastes; and butt rolls, mill wrappers, and rejected unused stock; and

(ii) Repulped finished paper and paperboard from obsolete inventories of paper and paperboard manufacturers, merchants, wholesalers, dealers, printers, converters, or others.

(b) In accordance with Section 101 of Executive Order 13101 of September 14, 1998, Greening the Government through Waste Prevention, Recycling, and Federal Acquisition, the Contractor is encouraged to submit paper documents, such as offers, letters, or reports, that are printed or copied double-sided on recycled paper that meet minimum content standards specified in Section 505 of Executive Order 13101, when not using electronic commerce methods to submit information or data to the Government.

(c) If the Contractor cannot purchase high-speed copier paper, offset paper, forms bond, computer printout paper, carbonless paper, file folders, white wove envelopes, writing and office paper, book paper, cotton fiber paper, and cover stock meeting the 30 percent postconsumer material standard for use in submitting paper documents to the Government, it should use paper containing no less than 20 percent postconsumer material. This lesser standard should be used only when paper meeting the 30 percent postconsumer material standard is not obtainable at a reasonable price or does not meet reasonable performance standards.

(End of clause)

13. DFARS 252.204-7003 CONTROL OF GOVERNMENT PERSONNEL WORK PRODUCT (APR 1992)

The Contractor's procedures for protecting against unauthorized disclosure of information shall not require Department of Defense employees or members of the Armed Forces to relinquish control of their work products, whether classified or not, to the Contractor.

14. *FAR 52.209-6 PROTECTING THE GOVERNMENTS INTEREST WHEN SUBCONTRACTING WITH CONTRACTORS DEBARRED, SUSPENDED, OR PROPOSED FOR DEBARMENT (JUL 1995)

(a) The Government suspends or debars Contractors to protect the Government's interests. The Contractor shall not enter into any subcontract in excess of $25,000 with a Contractor that is debarred, suspended, or proposed for debarment unless there is a compelling reason to do so.

(b) The Contractor shall require each proposed first-tier subcontractor, whose subcontract will exceed $25,000, to disclose to the Contractor, in writing, whether as of the time of award of the subcontract, the subcontractor, or its principals, is or is not debarred, suspended, or proposed for debarment by the Federal Government.

(c) A corporate office or a designee of the Contractor shall notify the Contracting Officer, in writing, before entering into a subcontract with a party that is debarred, suspended, or proposed for debarment (see FAR 9.404 for information on the List of Parties Excluded from Procurement Programs). The notice must include the following:

(1) The name of the subcontractor.

(2) The Contractor's knowledge of the reasons for the subcontractor being on the List of Parties Excluded from Procurement Programs.

(3) The compelling reason(s) for doing business with the subcontractor notwithstanding its inclusion on the List of Parties Excluded From Procurement Programs.

(4) The systems and procedures the Contractor has established to ensure that it is fully protecting the Government's interests when dealing with such subcontractor in view of the specific basis for the party's debarment, suspension, or proposed debarment.

15. DFARS 252.209-7004 SUBCONTRACTING WITH FIRMS THAT ARE OWNED OR CONTROLLED BY THE GOVERNMENT OF A TERRORIST COUNTRY (MAR 1998)

(a) Unless the Government determines that there is a compelling reason to do so, the Contractor shall not enter into any subcontract in excess of $25,000 with a firm, or a subsidiary of a firm, that is identified, on the List of Parties Excluded from Federal Procurement and Nonprocurement Programs, as being ineligible for the award of Defense contracts or subcontracts because it is owned or controlled by the government of a terrorist country.

(b) A corporate officer or a designee of the Contractor shall notify the Contracting Officer, in writing, before entering into a subcontract with a party that is identified, on the List of Parties Excluded from Federal Procurement and Nonprocurement Programs, as being ineligible for the award of Defense contracts or subcontracts because it is owned or controlled by the government of a terrorist country. The notice must include the name of the proposed subcontractor and the compelling reason(s) for doing business with the subcontractor notwithstanding its inclusion on the List of Parties Excluded From Federal Procurement and Nonprocurement Programs.

(End of clause)

16. *FAR 52.211-15 DEFENSE PRIORITY AND ALLOCATION REQUIREMENTS (SEP 1990) [For Military Contract's Only]

This is a rated order certified for national defense use, and the Contractor shall follow all the requirements of the Defense Priorities and Allocations System regulation (15 CFR 700).

17. FAR 52.211-18 VARIATION IN ESTIMATED QUANTITY (APR 1984)

If the quantity of a unit-priced item in this contract is an estimated quantity and the actual quantity of the unit-priced item varies more than 15 percent above or below the estimated quantity, an equitable adjustment in the contract price shall be made upon demand of either party. The equitable adjustment shall be based upon any increase or decrease in costs due solely to the variation above 115 percent or below 85 percent of the estimated quantity. If the quantity variation is such as to cause an increase in the time necessary for completion, the Contractor may request, in writing, an extension of time, to be received by the Contracting Officer within 10 days from the beginning of the delay, or within such further period as may be granted by the Contracting Officer before the date of final settlement of the contract. Upon the receipt of a written request for an extension, the Contracting

Officer shall ascertain the facts and make an adjustment for extending the completion date as, in the judgement of the Contracting Officer, is justified.

18. *FAR 52.214-26 AUDIT AND RECORDS--SEALED BIDDING (OCT 1997)

(a) As used in this clause, "records" includes books, documents, accounting procedures and practices, and other data, regardless of whether such items are in written form, in the form of computer data, or in any other form.

(b) Cost or pricing data. If the Contractor has submitted cost or pricing data in connection with the pricing of any modification to this contract, the Contracting Officer or authorized representative of the Contracting Officer, in order to evaluate the accuracy, completeness, and currency of the cost or pricing data, shall have the right to examine and audit all of the Contractor's records, including computations and projections related to--

(1) The proposal for the modification;

(2) The discussions conducted on the proposal(s), including those related to negotiating;

(3) Pricing of the modification; or

(4 Performance of the modification.

(c) Comptroller General. In the case of pricing any modification, the Comptroller General of the United States, or an authorized representative, shall have the same rights as specified in paragraph (b) of this clause.

(d) Availability. The Contractor shall make available at its office at all reasonable times the materials described in paragraph (b) of this clause, for examination, audit, or reproduction, until 3 years after final payment under this contract, or for any other period specified in Subpart 4.7 of the Federal Acquisition Regulation (FAR). FAR Subpart 4.7, Contractor Records Retention, in effect on the date of this contract, is incorporated by reference in its entirety and made a part of this contract.

(1) If this contract is completely or partially terminated, the records relati ng to the work terminated shall be made available for 3 years after any resulting final termination settlement.

(2) Records pertaining to appeals under the Disputes clause or to litigation or the settlement of claims arising under or relating to the performance of this contract shall be made available until disposition of such appeals, litigation, or claims.

(e) The Contractor shall insert a clause containing all the provisions of this clause, including this paragraph (e), in all subcontracts expected to exceed the threshold in FAR 15.403-4(a)(1) for submission of cost or pricing data.

19. *FAR 52.214-27 PRICE REDUCTION FOR DEFECTIVE COST OR PRICING DATA—MODIFICATIONS--SEALED BIDDING (OCT 1997)

(a) This clause shall become operative only for any modification to this contract involving aggregate increases and/or decreases in costs, plus applicable profits, expected to exceed the threshold for submission of cost or pricing data at FAR 15.403-4(a)(1), except that this clause does not apply to any modification if an exception under FAR 15.403-1(b) applies.

(b) If any price, including profit, negotiated in connection with any modification under this clause, was increased by any significant amount because

(1) The Contractor or a subcontractor furnished cost or pricin g data that were not complete, accurate, and current as certified in its Certificate of Current Cost or Pricing Data,

(2) a subcontractor or prospective subcontractor furnished the Contractor cost or pricing data that were not complete, accurate, and current as certified in the Contractor's Certificate of Current Cost or Pricing Data, or

(3) Any of these parties furnished data of any description that were not accurate, the price shall be reduced accordingly and the contract shall be modified to reflect the reduction. This right to a price reduction is limited to that resulting from defects in data relating to modifications for which this clause becomes operative under paragraph (a) of this clause.

(c) Any reduction in the contract price under paragraph (b) above due to defective data from a prospective subcontractor that was not subsequently awarded the subcontract shall be limited to the amount, plus applicable overhead and profit markup, by which

(1) the actual subcontract or

(2) the actual cost to the Contractor, if there was no subcontract, was less than the prospective subcontract cost estimate submitted by the Contractor; provided, that the actual subcontract price was not itself affected by defective cost or pricing data.

(d) (1) If the Contracting Officer determines under paragraph (b) of this clause that a price or cost reduction should be made, the Contractor agrees not to raise the following matters as a defense:

(i) The Contractor or subcontractor was a sole source supplier or otherwise was in a superior bargaining position and thus the price of the contract would not have been modified even if accurate, complete, and current cost or pricing data had been submitted.

(ii) The Contracting Officer should have known that the cost or pricing data in is sue were defective even though the Contractor or subcontractor took no affirmative action to bring the character of the data to the attention of the Contracting Officer.

(iii) The contract was based on an agreement about the total cost of the contract and there was no agreement about the cost of each item procured under the contract.

(iv) The Contractor or subcontractor did not submit a Certificate of Current Cost or Pricing Data.

(2) (i) Except as prohibited by subdivision (d)(2)(ii) of this clause, an offset in an amount determined appropriate by the Contracting Officer based upon the facts shall be allowed against the amount of a contract price reduction if--

(A) The Contractor certifies to the Contracting Officer that, to the best of the Contractor's knowledge and belief, the Contractor is entitled to the offset in the amount requested; and

(B) The Contractor proves that the cost or pricing data were available before the date of agreement on the price of the contract (or price of the modification) and that the data were not submitted before such date.

(ii) An offset shall not be allowed if--

(A) The understated data was known by the Contractor to be understated when the Certificate of Current Cost or Pricing Data was signed; or

(B) The Government proves that the facts demonstrate that the contract price would not have increased in the amount to be offset even if the available data had been submitted before the date of agreement on price.

(e) If any reduction in the contract price under this clause reduces the price of items for which payment was made prior to the date of the modification reflecting the price reduction, the Contractor shall be liable to and shall pay the United States at the time such overpayment is repaid--

(1) Simple interest on the amount of such overpayment to be computed from the date(s) of overpayment to the Contractor to the date the Government is repaid by the Contractor at the applicable underpayment rate effective for each quarter prescribed by the Secretary of the Treasury under 26 U.S.C. 6621(a)(2); and

(2) A penalty equal to the amount of the overpayment, if the Contractor of subcontractor knowingly submitted cost or pricing data which were incomplete, inaccurate, or noncurrent.

20. *FAR 52.214-28 SUBCONTRACTOR COST OR PRICING DATA–MODIFICATIONS—SEALED BIDDING (OCT 1997)

(a) The requirements of paragraphs (b) and (c) of this clause shall--

(1) Become operative only for any modification to this contract involving aggregate increases and/or decreases in costs, plus applicable profits, expected to exceed the threshold for submission of cost or pricing data at FAR 15.403-4(a)(1); and

(2) Be limited to such modifications.

(b) Before awarding any subcontract expected to exceed the threshold for submission of cost or pricing data at FAR 15.403-4(a)(1), on the date of agreement on price or the date of award, whichever is later; or before pricing any subcontract modification involving aggregate increases and/or decreases in costs, plus applicable profits, expected to exceed the threshold for submission of cost or pricing data at FAR 15.403-4(a)(1), the Contractor shall require the subcontractor to submit cost or pricing data (actually or by specific identification in writing), unless an exception under FAR 15.403-1(b) applies.

(c) The Contractor shall require the subcontractor to certify in substantially the form prescribed in FAR subsection 15.406-2 that, to the best of its knowledge and belief, the data submitted under paragraph (b) above were accurate, complete, and current as of the date of agreement on the negotiated price of the subcontract or subcontract modification.

(d) The Contractor shall insert the substance of this clause, including this paragraph (d), in each subcontract that when entered into, exceeds the threshold for submission of cost or pricing data at FAR 15.403-4(a)(1).

(End of clause)

21. *FAR 52.219-4 NOTICE OF PRICE EVALUATION PREFERENCE FOR HUBZONE SMALL BUSINESS CONCERNS (JAN 1999)

(a) *Definition.* "HUBZone small business concern," as used in this clause, means a small business concern that appears on the List of Qualified HUBZone Small Business Concerns maintained by the Small Business Administration.

(b) *Evaluation preference*. (1) Offers will be evaluated by adding a factor of 10 percent to the price of all offers, except—

(i) Offers from HUBZone small business concerns that have not waived the evaluation preference;

(ii) Otherwise successful offers from small business concerns;

(iii) Otherwise successful offers of eligible products under the Trade Agreements Act when the dollar threshold for application of the Act is exceeded (see 25.402 of the Federal Acquisition Regulation (FAR)); and

(iv) Otherwise successful offers where application of the factor would be inconsistent with a Memorandum of Understanding or other international agreement with a foreign government.

(2) The factor of 10 percent shall be applied on a line item basis or to any group of items on which award may be made. Other evaluation factors described in the solicitation shall be applied before application of the factor.

(3) A concern that is both a HUBZone small business concern and a small disadvantaged business concern will receive the benefit of both the HUBZone small business price evaluation preference and the small disadvantaged business price evaluation adjustment (see FAR clause 52.219-23). Each applicable price evaluation preference or adjustment shall be calculated independently against an offeror's base offer. These individual preference amounts shall be added together to arrive at the total evaluated price for that offer.

(c) *Waiver of evaluation preference.* A HUBZone small business concern may elect to waive the evaluation preference, in which case the factor will be added to its offer for evaluation purposes. The agreements in paragraph (d) of this clause do not apply if the offeror has waived the evaluation preference.

[ ] Offeror elects to waive the evaluation preference.

(d) *Agreement.* A HUBZone small business concern agrees that in the performance of the contract, in the case of a contract for—

(1) Services (except construction), at least 50 percent of the cost of personnel for contract performance will be spent for employees of the concern or employees of other HUBZone small business concerns;

(2) Supplies (other than procurement from a nonmanufacturer of such supplies), at least 50 percent of the cost of manufacturing, excluding the cost of materials, will be performed by the concern or other HUBZone

small business concerns;

(3) General construction, at least 15 percent of the cost of the contract performance incurred for personnel will be will be spent on the concern's employees or the employees of other HUBZone small business concerns; or

(4) Construction by special trade contractors, at least 25 percent of the cost of the contract performance incurred for personnel will be spent on the concern's employees or the employees of other HUBZone small business concerns.

(e) A HUBZone joint venture agrees that in the performance of the contract, the applicable percentage specified in paragraph (d) of this clause will be performed by the HUBZone small business participant or participants.

(f) A HUBZone small business concern nonmanufacturer agrees to furnish in performing this contract only end items manufactured or produced by HUBZone small business manufacturer concerns. This paragraph does not apply in connection with construction or service contracts.

(End of clause)

22. *FAR 52.219-8 UTILIZATION OF SMALL BUSINESS CONCERNS (OCT 2000)

(a) It is the policy of the United States that small business concerns, veteran-owned small business concerns, service-disabled veteran-owned small business concerns, HUBZone small business concerns, small disadvantaged business concerns, and women-owned small business concerns shall have the maximum practicable opportunity to participate in performing contracts let by any Federal agency, including contracts and subcontracts for subsystems, assemblies, components, and related services for major systems. It is further the policy of the United States that its prime contractors establish procedures to ensure the timely payment of amounts due pursuant to the terms of their subcontracts with small business concerns, veteran-owned small business concerns, service-disabled veteran-owned small business concerns, HUBZone small business concerns, small disadvantaged business concerns, and women-owned small business concerns.

(b) The Contractor hereby agrees to carry out this policy in the awarding of subcontracts to the fullest extent consistent with efficient contract performance. The Contractor further agrees to cooperate in any studies or surveys as may be conducted by the United States Small Business Administration or the awarding agency of the United States as may be necessary to determine the extent of the Contractor ’s compliance with this clause.

(c) *Definitions.* As used in this contract—

“HUBZone small business concern” means a small business concern that appears on the List of Qualified HUBZone Small Business Concerns maintained by the Small Business Administration .

“Service-disabled veteran-owned small business concern ” —

(1) Means a small business concern—

(i) Not less than 51 percent of which is owned by one or more service-disabled veterans or, in the case of any publicly owned business, not less than 51 percent of the stock of which is owned by one or more service-disabled veterans; and

(ii) The management and daily business operations of which are controlled by one or more service-disabled veterans or, in the case of a veteran with permanent and severe disability, the spouse or permanent caregiver of such veteran.

(2) Service-disabled veteran means a veteran, as defined in 38 U.S.C. 101(2), with a disability that is service-connected, as defined in 38 U.S.C. 101(16).

“Small business concern” means a small business as defined pursuant to Section 3 of the Small Business Act and relevant regulations promulgated pursuant thereto.

“Small disadvantaged business concern” means a small business concern that represents, as part of its offer that—

(1) It has received certification as a small disadvantaged business concern consistent with 13 CFR part 124, Subpart B;

(2) No material change in disadvantaged ownership and control has occurred since its certification;

(3) Where the concern is owned by one or more individuals, the net worth of each individual upon whom the certification is based does not exceed $750,000 after taking into account the applicable exclusions set forth at 13 CFR 124.104(c)(2); and

(4) It is identified, on the date of its representation, as a certified small disadvantaged business in the database maintained by the Small Business Administration (PRO-Net).

"Veteran-owned small business concern" means a small business concern—

(1) Not less than 51 percent of which is owned by one or more veterans (as defined at 38 U.S.C. 101(2)) or, in the case of any publicly owned business, not less than 51 percent of the stock of which is owned by one or more veterans; and

(2) The management and daily business operations of which are controlled by one or more veterans.

"Women-owned small business concern" means a small business concern—

(1) That is at least 51 percent owned by one or more women, or, in the case of any publicly owned business, at least 51 percent of the stock of which is owned by one or more women; and

(2) Whose management and daily business operations are controlled by one or more women.

(d) Contractors acting in good faith may rely on written representations by their subcontractors regarding their status as a small business concern, a veteran-owned small business concern, a service-disabled veteran-owned small business concern, a HUBZone small business concern, a small disadvantaged business concern, or a women-owned small business concern.

(End of clause)

23. *FAR 52.219-9 SMALL BUSINESS SUBCONTRACTING PLAN (JAN 2002) [When Contracting By Negotiations]

(a) This clause does not apply to small business concerns.

(b) *Definitions*. As used in this clause—

"Commercial item" means a product or service that satisfies the definition of commercial item in section 2.101 of the Federal Acquisition Regulation.

"Commercial plan" means a subcontracting plan (including goals) that covers the offeror's fiscal year and that applies to the entire production of commercial items sold by either the entire company or a portion thereof (*e.g.*, division, plant, or product line).

"Individual contract plan" means a subcontracting plan that covers the entire contract period (including option periods), applies to a specific contract, and has goals that are based on the offeror's planned subcontracting in support of the specific contract, except that indirect costs incurred for common or joint purposes may be allocated on a prorated basis to the contract.

"Master plan" means a subcontracting plan that contains all the required elements of an individual contract plan, except goals, and may be incorporated into individual contract plans, provided the master plan has been approved.

"Subcontract" means any agreement (other than one involving an employer-employee relationship) entered into by a Federal Government prime Contractor or subcontractor calling for supplies or services required for performance of the contract or subcontract.

(c) The offeror, upon request by the Contracting Officer, shall submit and negotiate a subcontracting plan, where applicable, that separately addresses subcontracting with small business, veteran-owned small business, service-disabled veteran-owned small business, HUBZone small business concerns, small disadvantaged business, and women-owned small business concerns. If the offeror is submitting an individual contract plan, the plan must separately address subcontracting with small business, veteran-owned small business, service-disabled veteran-owned small business, HUBZone small business, small disadvantaged business, and women-owned small business concerns, with a separate part for the basic contract and separate parts for each option (if any). The plan shall be included in and made a part of the resultant contract. The subcontracting plan shall be negotiated within the time specified by the Contracting Officer. Failure to submit and negotiate the subcontracting plan shall make the offeror ineligible for award of a contract.

(d) The offeror's subcontracting plan shall include the following:

(1) Goals, expressed in terms of percentages of total planned subcontracting dollars, for the use of small business, veteran-owned small business, service-disabled veteran-owned small business, HUBZone small business, small disadvantaged business, and women-owned small business concerns as subcontractors. The offeror shall include all subcontracts that contribute to contract performance, and may

include a proportionate share of products and services that are normally allocated as indirect costs.

(2) A statement of—

(i) Total dollars planned to be subcontracted for an individual contract plan; or the offeror's total projected sales, expressed in dollars, and the total value of projected subcontracts to support the sales for a commercial plan;

(ii) Total dollars planned to be subcontracted to small business concerns;

(iii) Total dollars planned to be subcontracted to veteran-owned small business concerns;

(iv) Total dollars planned to be subcontracted to service-disabled veteran-owned small business;

(v) Total dollars planned to be subcontracted to HUBZone small business concerns;

(vi) Total dollars planned to be subcontracted to small disadvantaged business concerns; and

(vii) Total dollars planned to be subcontracted to women-owned small business concerns.

(3) A description of the principal types of supplies and services to be subcontracted, and an identification of the types planned for subcontracting to—

(i) Small business concerns;

(ii) Veteran-owned small business concerns;

(iii) Service-disabled veteran-owned small business concerns;

(iv) HUBZone small business concerns;

(v) Small disadvantaged business concerns; and

(vi) Women-owned small business concerns.

(4) A description of the method used to develop the subcontracting goals in paragraph (d)(1) of this clause.

(5) A description of the method used to identify potential sources for solicitation purposes (*e.g.*, existing company source lists, the Procurement Marketing and Access Network (PRO-Net) of the Small Business Administration (SBA), veterans service organizations, the National Minority Purchasing Council Vendor Information Service, the Research and Information Division of the Minority Business Development Agency in the Department of Commerce, or small, HUBZone, small disadvantaged, and women-owned small business trade associations). A firm may rely on the information contained in PRO-Net as an accurate representation of a concern's size and ownership characteristics for the purposes of maintaining a small, veteran-owned small, service-disabled veteran-owned small, HUBZone small, small disadvantaged, and women-owned small business source list. Use of PRONet as its source list does not relieve a firm of its responsibilities (*e.g.*, outreach, assistance, counseling, or publicizing subcontracting opportunities) in this clause.

(6) A statement as to whether or not the offeror included indirect costs in establishing subcontracting goals, and a description of the method used to determine the proportionate share of indirect costs to be incurred with—

(i) Small business concerns;

(ii) Veteran-owned small business concerns;

(iii) Service-disabled veteran-owned small business concerns;

(iv) HUBZone small business concerns;

(v) Small disadvantaged business concerns; and

(vi) Women-owned small business concerns.

(7) The name of the individual employed by the offeror who will administer the offeror's subcontracting program, and a description of the duties of the individual.

(8) A description of the efforts the offeror will make to assure that small business, veteran-owned small business, service-disabled veteran-owned small business, HUBZone small business, small disadvantaged business, and women-owned small business concerns have an equitable opportunity to compete for subcontracts.

(9) Assurances that the offeror will include the clause of this contract entitled "Utilization of Small Business Concerns" in all subcontracts that offer further subcontracting opportunities, and that the offeror will require all subcontractors (except small business concerns) that receive subcontracts in excess of $500,000 ($1,000,000 for construction of any public facility) to adopt a subcontracting plan that complies with the requirements of this clause.

(10) Assurances that the offeror will—

(i) Cooperate in any studies or surveys as may be required;

(ii) Submit periodic reports so that the Government can determine the extent of compliance by the offeror with the subcontracting plan;

(iii) Submit Standard Form (SF) 294, Subcontracting Report for Individual Contracts, and/or SF 295, Summary Subcontract Report, in accordance with paragraph (j) of this clause. The reports shall provide information on subcontract awards to small business concerns, veteran-owned small business concerns, service-disabled veteran-owned small business concerns, HUBZone small business concerns, small disadvantaged business concerns, women-owned small business concerns, and Historically Black Colleges and Universities and Minority Institutions. Reporting shall be in accordance with the instructions on the forms or as provided in agency regulations.

(iv) Ensure that its subcontractors agree to submit SF 294 and SF 295.

(11) A description of the types of records that will be maintained concerning procedures that have been adopted to comply with the requirements and goals in the plan, including establishing source lists; and a description of the offeror's efforts to locate small business, veteran-owned small business, service-disabled veteran-owned small business, HUBZone small business, small disadvantaged business, and women-owned small business concerns and award subcontracts to them. The records shall include at least the following (on a plant-wide or company-wide basis, unless otherwise indicated):

(i) Source lists (*e.g.*, PRO-Net), guides, and other data that identify small business, veteran-owned small business, service-disabled veteran-owned small business, HUBZone small business, small disadvantaged business, and women-owned small business concerns.

(ii) Organizations contacted in an attempt to locate sources that are small business, veteran-owned small business, service-disabled veteran-owned small business, HUBZone small business, small disadvantaged business, or women-owned small business concerns.

(iii) Records on each subcontract solicitation resulting in an award of more than $100,000, indicating—

(A) Whether small business concerns were solicited and, if not, why not;

(B) Whether veteran-owned small business concerns were solicited and, if not, why not;

(C) Whether service-disabled veteran-owned small business concerns were solicited and, if not, why not;

(D) Whether HUBZone small business concerns were solicited and, if not, why not;

(E) Whether small disadvantaged business concerns were solicited and, if not, why not;

(F) Whether women-owned small business concerns were solicited and, if not, why not; and

(G) If applicable, the reason award was not made to a small business concern.

(iv) Records of any outreach efforts to contact—

(A) Trade associations;

(B) Business development organizations;

(C) Conferences and trade fairs to locate small, HUBZone small, small disadvantaged, and women-owned small business sources; and

(D) Veterans service organizations.

(v) Records of internal guidance and encouragement provided to buyers through—

(A) Workshops, seminars, training, etc.; and

(B) Monitoring performance to evaluate compliance with the program’s requirements.

(vi) On a contract-by-contract basis, records to support award data submitted by the offeror to the Government, including the name, address, and business size of each subcontractor. Contractors having commercial plans need not comply with this requirement.

(e) In order to effectively implement this plan to the extent consistent with efficient contract performance, the Contractor shall perform the following functions:

(1) Assist small business, veteran-owned small business, service-disabled veteran-owned small business, HUBZone small business, small disadvantaged business, and women-owned small business concerns by arranging solicitations, time for the preparation of bids, quantities, specifications, and delivery schedules so as to

facilitate the participation by such concerns. Where the Contractor's lists of potential small business, veteran-owned small business, service-disabled veteran-owned small business, HUBZone small business, small disadvantaged business, and women-owned small business subcontractors are excessively long, reasonable effort shall be made to give all such small business concerns an opportunity to compete over a period of time.

(2) Provide adequate and timely consideration of the potentialities of small business, veteran-owned small business, service-disabled veteran-owned small business, HUBZone small business, small disadvantaged business, and women-owned small business concerns in all "make-or-buy" decisions.

(3) Counsel and discuss subcontracting opportunities with representatives of small business, veteran-owned small business, service-disabled veteran-owned small business , HUBZone small business, small disadvantaged business, and women-owned small business firms.

(4) Provide notice to subcontractors concerning penalties and remedies for misrepresentations of business status as small, veteran-owned small business, HUBZone small, small disadvantaged, or women-owned small business for the purpose of obtaining a subcontract that is to be included as part or all of a goal contained in the Contractor's subcontracting plan.

(f) A master plan on a plant or division-wide basis that contains all the elements required by paragraph (d) of this clause, except goals, may be incorporated by reference as a part of the subcontracting plan required of the offeror by this clause; provided —

(1) The master plan has been approved;

(2) The offeror ensures that the master plan is updated as necessary and provides copies of the approved master plan, including evidence of its approval, to the Contracting Officer; and

(3) Goals and any deviations from the master plan deemed necessary by the Contracting Officer to satisfy the requirements of this contract are set forth in the individual subcontracting plan.

(g) A commercial plan is the preferred type of subcontracting plan for contractors furnishing commercial items. The commercial plan shall relate to the offeror's planned subcontracting generally, for both commercial and Government business, rather than solely to the Government contract. Commercial plans are also preferred for subcontractors that provide commercial items under a prime contract, whether or not the prime contractor is supplying a commercial item.

(h) Prior compliance of the offeror with other such subcontracting plans under previous contracts will be considered by the Contracting Officer in determining the responsibility of the offeror for award of the contract.

(i) The failure of the Contractor or subcontractor to comply in good faith with—

(1) The clause of this contract entitled "Utilization Of Small Business Concerns;" or

(2) An approved plan required by this clause, shall be a material breach of the contract.

(j) The Contractor shall submit the following reports:

(1) *Standard Form 294, Subcontracting Report for Individual Contracts.* This report shall be submitted to the Contracting Officer semiannually and at contract completion. The report covers subcontract award data related to this contract. This report is not required for commercial plans.

(2) *Standard Form 295, Summary Subcontract Report.* This report encompasses all of the contracts with the awarding agency. It must be submitted semi-annually for contracts with the Department of Defense and annually for contracts with civilian agencies. If the reporting activity is covered by a commercial plan, the reporting activity must report annually all subcontract awards under that plan. All reports submitted at the close of each fiscal year (both individual and commercial plans) shall include a breakout, in the Contractor's format, of subcontract awards, in whole dollars, to small disadvantaged business concerns by North American Industry Classification System (NAICS) Industry Subsector. For a commercial plan, the Contractor may obtain from each of its subcontractors a predominant NAICS Industry Subsector and report all awards to that subcontractor under its predominant NAICS Industry Subsector.

(End of clause)

24. *FAR 52.219-9 SMALL BUSINESS SUBCONTRACTING PLAN (JAN 2002) --ALTERNATE I (OCT 2001) [<u>When Contracting By Sealed Bidding</u>]

(a) This clause does not apply to small business concerns.

(b) *Definitions*. As used in this clause—

"Commercial item" means a product or service that satisfies the definition of commercial item in section 2.101 of the Federal Acquisition Regulation.

"Commercial plan" means a subcontracting plan (including goals) that covers the offeror's fiscal year and that applies to the entire production of commercial items sold by either the entire company or a portion thereof (*e.g.*, division, plant, or product line).

"Individual contract plan" means a subcontracting plan that covers the entire contract period (including option periods), applies to a specific contract, and has goals that are based on the offeror's planned subcontracting in support of the specific contract, except that indirect costs incurred for common or joint purposes may be allocated on a prorated basis to the contract.

"Master plan" means a subcontracting plan that contains all the required elements of an individual contract plan, except goals, and may be incorporated into individual contract plans, provided the master plan has been approved.

"Subcontract" means any agreement (other than one involving an employer-employee relationship) entered into by a Federal Government prime Contractor or subcontractor calling for supplies or services required for performance of the contract or subcontract.

(c) The apparent low bidder, upon request by the Contracting Officer, shall submit a subcontracting plan, where applicable, that separately addresses subcontracting with small business, veteran-owned small business, service-disabled veteran-owned small business, HUBZone small business, small disadvantaged business, and women-owned small business concerns. If the bidder is submitting an individual contract plan, the plan must separately address subcontracting with small business, veteran-owned small business, service-disabled veteran-owned small business, HUBZone small business, small disadvantaged business, and women-owned small business concerns, with a separate part for the basic contract and separate parts for each option (if any). The plan shall be included in and made a part of the resultant contract. The subcontracting plan shall be submitted within the time specified by the Contracting Officer. Failure to submit the subcontracting plan shall make the bidder ineligible for the award of a contract.

(d) The offeror's subcontracting plan shall include the following:

(1) Goals, expressed in terms of percentages of total planned subcontracting dollars, for the use of small business, veteran-owned small business, service-disabled veteran-owned small business, HUBZone small business, small disadvantaged business, and women-owned small business concerns as subcontractors. The offeror shall include all subcontracts that contribute to contract performance, and may include a proportionate share of products and services that are normally allocated as indirect costs.

(2) A statement of—

(i) Total dollars planned to be subcontracted for an individual contract plan; or the offeror's total projected sales, expressed in dollars, and the total value of projected subcontracts to support the sales for a commercial plan;

(ii) Total dollars planned to be subcontracted to small business concerns;

(iii) Total dollars planned to be subcontracted to veteran-owned small business concerns;

(iv) Total dollars planned to be subcontracted to service-disabled veteran-owned small business;

(v) Total dollars planned to be subcontracted to HUBZone small business concerns;

(vi) Total dollars planned to be subcontracted to small disadvantaged business concerns; and

(vii) Total dollars planned to be subcontracted to women-owned small business concerns.

(3) A description of the principal types of supplies and services to be subcontracted, and an identification of the types planned for subcontracting to—

(i) Small business concerns;

(ii) Veteran-owned small business concerns;

(iii) Service-disabled veteran-owned small business concerns;

(iv) HUBZone small business concerns;

(v) Small disadvantaged business concerns; and

(vi) Women-owned small business concerns.

(4) A description of the method used to develop the subcontracting goals in paragraph (d)(1) of this clause.

(5) A description of the method used to identify potential sources for solicitation purposes (*e.g.*, existing company source lists, the Procurement Marketing and Access Network (PRO-Net) of the Small Business Administration (SBA), veterans service organizations, the National Minority Purchasing Council Vendor

Information Service, the Research and Information Division of the Minority Business Development Agency in the Department of Commerce, or small, HUBZone, small disadvantaged, and women-owned small business trade associations). A firm may rely on the information contained in PRO-Net as an accurate representation of a concern's size and ownership characteristics for the purposes of maintaining a small, veteran-owned small, service-disabled veteran-owned small, HUBZone small, small disadvantaged, and women-owned small business source list. Use of PRONet as its source list does not relieve a firm of its responsibilities (*e.g.*, outreach, assistance, counseling, or publicizing subcontracting opportunities) in this clause.

(6) A statement as to whether or not the offeror included indirect costs in establishing subcontracting goals, and a description of the method used to determine the proportionate share of indirect costs to be incurred with—

(i) Small business concerns;

(ii) Veteran-owned small business concerns;

(iii) Service-disabled veteran-owned small business concerns;

(iv) HUBZone small business concerns;

(v) Small disadvantaged business concerns; and

(vi) Women-owned small business concerns.

(7) The name of the individual employed by the offeror who will administer the offeror's subcontracting program, and a description of the duties of the individual.

(8) A description of the efforts the offeror will make to assure that small business, veteran-owned small business, service-disabled veteran-owned small business, HUBZone small business, small disadvantaged business, and women-owned small business concerns have an equitable opportunity to compete for subcontracts.

(9) Assurances that the offeror will include the clause of this contract entitled "Utilization of Small Business Concerns" in all subcontracts that offer further subcontracting opportunities, and that the offeror will require all subcontractors (except small business concerns) that receive subcontracts in excess of $500,000 ($1,000,000 for construction of any public facility) to adopt a subcontracting plan that complies with the requirements of this clause.

(10) Assurances that the offeror will—

(i) Cooperate in any studies or surveys as may be required;

(ii) Submit periodic reports so that the Government can determine the extent of compliance by the offeror with the subcontracting plan;

(iii) Submit Standard Form (SF) 294, Subcontracting Report for Individual Contracts, and/or SF 295, Summary Subcontract Report, in accordance with paragraph (j) of this clause. The reports shall provide information on subcontract awards to small business concerns, veteran-owned small business concerns, service-disabled veteran-owned small business concerns, HUBZone small business concerns, small disadvantaged business concerns, women-owned small business concerns, and Historically Black Colleges and Universities and Minority Institutions. Reporting shall be in accordance with the instructions on the forms or as provided in agency regulations.

(iv) Ensure that its subcontractors agree to submit SF 294 and SF 295.

(11) A description of the types of records that will be maintained concerning procedures that have been adopted to comply with the requirements and goals in the plan, including establishing source lists; and a description of the offeror's efforts to locate small business, veteran-owned small business, service-disabled veteran-owned small business, HUBZone small business, small disadvantaged business, and women-owned small business concerns and award subcontracts to them. The records shall include at least the following (on a plant-wide or company-wide basis, unless otherwise indicated):

(i) Source lists (*e.g.*, PRO-Net), guides, and other data that identify small business, veteran-owned small business, service-disabled veteran-owned small business, HUBZone small business, small disadvantaged business, and women-owned small business concerns.

(ii) Organizations contacted in an attempt to locate sources that are small business, veteran-owned small business, service-disabled veteran-owned small business, HUBZone small business, small disadvantaged business, or women-owned small business concerns.

(iii) Records on each subcontract solicitation resulting in an award of more than $100,000, indicating—

(A) Whether small business concerns were solicited and, if not, why not;

(B) Whether veteran-owned small business concerns were solicited and, if not,

why not;

(C) Whether service-disabled veteran-owned small business concerns were solicited and, if not, why not;

(D) Whether HUBZone small business concerns were solicited and, if not, why not;

(E) Whether small disadvantaged business concerns were solicited and, if not, why not;

(F) Whether women-owned small business concerns were solicited and, if not, why not; and

(G) If applicable, the reason award was not made to a small business concern.

(iv) Records of any outreach efforts to contact—

(A) Trade associations;

(B) Business development organizations;

(C) Conferences and trade fairs to locate small, HUBZone small, small disadvantaged, and women-owned small business sources; and

(D) Veterans service organizations.

(v) Records of internal guidance and encouragement provided to buyers through—

(A) Workshops, seminars, training, etc.; and

(B) Monitoring performance to evaluate compliance with the program's requirements.

(vi) On a contract-by-contract basis, records to support award data submitted by the offeror to the Government, including the name, address, and business size of each subcontractor. Contractors having commercial plans need not comply with this requirement.

(e) In order to effectively implement this plan to the extent consistent with efficient contract performance, the Contractor shall perform the following functions:

(1) Assist small business, veteran-owned small business, service-disabled veteran-owned small business, HUBZone small business, small disadvantaged business, and women-owned small business concerns by arranging solicitations, time for the preparation of bids, quantities, specifications, and delivery schedules so as to facilitate the participation by such concerns. Where the Contractor's lists of potential small business, veteran-owned small business, service-disabled veteran-owned small business, HUBZone small business, small disadvantaged business, and women-owned small business subcontractors are excessively long, reasonable effort shall be made to give all such small business concerns an opportunity to compete over a period of time.

(2) Provide adequate and timely consideration of the potentialities of small business, veteran-owned small business, service-disabled veteran-owned small business, HUBZone small business, small disadvantaged business, and women-owned small business concerns in all "make-or-buy" decisions.

(3) Counsel and discuss subcontracting opportunities with representatives of small business, veteran-owned small business, service-disabled veteran-owned small business , HUBZone small business, small disadvantaged business, and women-owned small business firms.

(4) Provide notice to subcontractors concerning penalties and remedies for misrepresentations of business status as small, veteran-owned small business, HUBZone small, small disadvantaged, or women-owned small business for the purpose of obtaining a subcontract that is to be included as part or all of a goal contained in the Contractor's subcontracting plan.

(f) A master plan on a plant or division-wide basis that contains all the elements required by paragraph (d) of this clause, except goals, may be incorporated by reference as a part of the subcontracting plan required of the offeror by this clause; provided —

(1) The master plan has been approved;

(2) The offeror ensures that the master plan is updated as necessary and provides copies of the approved master plan, including evidence of its approval, to the Contracting Officer; and

(3) Goals and any deviations from the master plan deemed necessary by the Contracting Officer to satisfy the requirements of this contract are set forth in the individual subcontracting plan.

(g) A commercial plan is the preferred type of subcontracting plan for contractors furnishing commercial items. The commercial plan shall relate to the offeror's planned subcontracting generally, for both commercial and Government business, rather than solely to the Government contract. Commercial plans are also preferred for subcontractors that provide commercial items under a prime contract, whether or not the prime contractor is

supplying a commercial item.

(h) Prior compliance of the offeror with other such subcontracting plans under previous contracts will be considered by the Contracting Officer in determining the responsibility of the offeror for award of the contract.

(i) The failure of the Contractor or subcontractor to comply in good faith with—

(1) The clause of this contract entitled "Utilization Of Small Business Concerns;" or

(2) An approved plan required by this clause, shall be a material breach of the contract.

(j) The Contractor shall submit the following reports:

(1) *Standard Form 294, Subcontracting Report for Individual Contracts.* This report shall be submitted to the Contracting Officer semiannually and at contract completion. The report covers subcontract award data related to this contract. This report is not required for commercial plans.

(2) *Standard Form 295, Summary Subcontract Report.* This report encompasses all of the contracts with the awarding agency. It must be submitted semi-annually for contracts with the Department of Defense and annually for contracts with civilian agencies. If the reporting activity is covered by a commercial plan, the reporting activity must report annually all subcontract awards under that plan. All reports submitted at the close of each fiscal year (both individual and commercial plans) shall include a breakout, in the Contractor's format, of subcontract awards, in whole dollars, to small disadvantaged business concerns by North American Industry Classification System (NAICS) Industry Subsector. For a commercial plan, the Contractor may obtain from each of its subcontractors a predominant NAICS Industry Subsector and report all awards to that subcontractor under its predominant NAICS Industry Subsector.

(End of clause)

25. DFARS 252.219-7009 SECTION 8(a) DIRECT AWARD (JUN 1998) [<u>When Competitive 8(a) Contracting Procedures are used</u>]

(a) This contract is issued as a direct award between the contracting office and the 8(a) Contractor pursuant to the Memorandum of Understanding dated May 6, 1998, between the Small Business Administration (SBA) and the Department of Defense. Accordingly, the SBA is not a party to this contract. SBA does retain responsibility for 8(a) certification, for 8(a) eligibility determinations and related issues, and for providing counseling and assistance to the 8(a) Contractor under the 8(a) Program. The cognizant SBA district office is:

[To be completed by the Contracting Officer at the time of award]

(b) The contracting office is responsible for administering the contract and for taking any action on behalf of the Government under the terms and conditions of the contract; provided that the contracting office shall give advance notice to the SBA before it issues a final notice terminating performance, either in whole or in part, under the contract. The contracting office also shall coordinate with the SBA prior to processing any novation agreement. The contracting office may assign contract administration functions to a contract administration office.

(c) The Contractor agrees that--

(1) It will notify the Contracting Officer, simultaneous with its notification to the SBA (as required by SBA's 8(a) regulations at 13 CFR 124.308), when the owner or owners upon whom 8(a) eligibility is based plan to relinquish ownership or control of the concern. Consistent with Section 407 of Pub. L. 100-656, transfer of ownership or control shall result in termination of the contract for convenience, unless the SBA waives the requirement for termination prior to the actual relinquishing of ownership and control; and

(2) It will not subcontract the performance of any of the requirements of this contract without the prior written approval of the SBA and the Contracting Officer.

(End of clause)

26. *FAR 52.219-14 LIMITATIONS ON SUBCONTRACTING (DEC 1996) [For Small Business Set Aside Only]

(a) This clause does not apply to the unrestricted portion of a partial set-aside.

(b) By submission of an offer and execution of a contract, the Offeror/Contractor agrees that in performance of the contract in the case of a contract for--

(1) Services (except construction). At least 50 percent of the cost of contract performance incurred for personnel shall be expended for employees of the concern.

(2) Supplies (other than procurement from a nonmanufacturer of such supplies). The concern shall perform work for at least 50 percent of the cost of manufacturing the supplies, not including the cost of materials.

(3) General construction. The concern will perform at least 15 percent of the cost of the contract, not including the cost of materials, with its own employees.

(4) Construction by special trade contractors. The concern will perform at lest 25 percent of the cost of the contract, not including the cost of materials, with its own employees.

27. *FAR 52.219-16 LIQUIDATED DAMAGES-SUBCONTRACTING PLAN (JAN 1999)

(a) Failure to make a good faith effort to comply with the subcontracting plan, as used in this clause, means a willful or intentional failure to perform in accordance with the requirements of the subcontracting plan approved under the clause in this contract entitled ``Small Business Subcontracting Plan," or willful or intentional action to frustrate the plan.

(b) Performance shall be measured by applying the percentage goals to the total actual subcontracting dollars or, if a commercial plan is involved, to the pro rata share of actual subcontracting dollars attributable to Government contracts covered by the commercial plan., If, at contract completion, or in the case of a commercial plan, at the close of the fiscal year for which the plan is applicable, the Contractor has failed to meet its subcontracting goals and the Contracting Officer decides in accordance with paragraph (c) of this clause that the Contractor failed to make a good faith effort to comply with its subcontracting plan, established in accordance with the clause in this contract entitled ``Small Business Subcontracting Plan," the Contractor shall pay the Government liquidated damages in an amount stated. The amount of probable damages attributable to the Contractor's failure to comply shall be an amount equal to the actual dollar amount by which the Contractor failed to achieve each subcontract goal.

(c) Before the Contracting Officer makes a final decision that the Contractor has failed to make such good faith effort, the Contracting Officer shall give the Contractor written notice specifying the failure and permitting the Contractor to demonstrate what good faith efforts have been made and to discuss the matter. Failure to respond to the notice may be taken as an admission that no valid explanation exists. If, after consideration of all the pertinent data, the Contracting Officer finds that the Contractor failed to make a good faith effort to comply with the subcontracting plan, the Contracting Officer shall issue a final decision to that effect and require that the Contractor pay the Government liquidated damages as provided in paragraph (b) of this clause.

(d) With respect to commercial plans, the Contracting Officer who approved the plan will perform the functions of the Contracting Officer under this clause on behalf of all agencies with contracts covered by a commercial plan.

(e) The Contractor shall have the right of appeal, under the cl ause in this contract entitled, Disputes, from many final decision of the Contracting Officer.

(f) Liquidated damages shall be in addition to any other remedies that the Government may have.

28. DFARS 252.219-7010 ALTERNATE A (JUN 1998) [When Competitive 8(a) Contracting Procedures are used]

As prescribed in 219.811-3(2), substitute the following paragraph (c) for paragraph (c) of the clause at FAR 52.219-18:

(c) Any award resulting from this solicitation will be made directly by the Contracting Officer to the successful 8(a) offeror selected through the evaluation criteria set forth in this solicitation.

29. FAR 52.219-18 NOTIFICATION OF COMPETITION LIMITED TO ELIGIBLE 8(A) CONCERNS (JUNE 1999) [When Competitive 8(a) Contracting Procedures are used]

(a) Offers are solicited only from small business concerns expressly certified by the Small Business Administration (SBA) for participation in the SBA's 8(a) Program and which meet the following criteria at the time of submission of offer--

(1) The Offeror is in conformance with the 8(a) support limitation set forth in its approved business plan; and

(2) The Offeror is in conformance with the Business Activity Targets set forth in its approved business plan or any remedial action directed by the SBA.

(b) By submission of its offer, the Offeror represents that it meets all of the criteria set forth in paragraph (a) of this clause.

(c) Any award resulting from this solicitation will be made to the Small Business Administration, which will subcontract performance to the successful 8(a) offeror selected through the evaluation criteria set forth in this solicitation.

(d) (1) Agreement. A small business concern submitting an offer in its own name agrees to furnish, in performing the contract, only end items manufactured or produced by small business concerns in the United States. The term ``United States" includes its territories and possessions, the Commonwealth of Puerto Rico, the Trust Territory of the Pacific Islands, and the District of Columbia. If this procurement is processed under simplified acquisition procedures and the total amount of this contract does not exceed $25,000, a small business concern may furnish the product of any domestic firm. This subparagraph does not apply in connection with construction or service contracts.

(2) The . . . . . [insert name of SBA's contractor] will notify the U.S. Army Corps of Engineers Contracting Officer in writing immediately upon entering an agreement (either oral or written) to transfer all or part of its stock or other ownership interest to any other party.

(End of clause)

30. DFARS 252.219-7003 SMALL, SMALL DISADVANTAGED AND WOMEN-OWNED SMALL BUSINESS SUBCONTRACTING PLAN (DOD CONTRACTS) (APR 1996)

This clause supplements the Federal Acquisition Regulation 52.219-9, Small , Small Disadvantaged and Women-Owned Small Business Subcontracting Plan, clause of this contract.

(a) Definitions.

"Historically black colleges and universities," as used in this clause, means institutions determined by the Secretary of Education to meet the requirements of 34 CFR Section 608.2. The term also means any nonprofit research institution that was an integral part of such a college or university before November 14, 1986.

"Minority institutions," as used in this clause, means institutions meeting the requirements of Section 1046(3) of the Higher Education Act of 1965 (20 U.S.C. 1135d-5(3)). The term also includes Hispanic-serving institutions as defined in Section 316(b)(1) of such Act (20 U.S.C. 1059c(b)(1).

(b) Except for company or division-wide commercial products subcontracting plans, the term "small disadvantaged business," when used in the FAR 52.219-9 clause, includes historically black colleges and universities and minority institutions in addition to small disadvantaged business concerns.

(c) Work under the contract or its subcontracts shall be credited toward meeting the small disadvantaged business concern goal required by paragraph (d) of the FAR 52.219-9 clause when:

(1) It is performed on Indian lands or in joint venture with an Indian tribe or a tribally-owned corporation, and

(2) It meets the requirements of 10 U.S.C. 2323a.

(d) Subcontracts awarded to workshops approved by the Committee for Purchase from People Who are Blind or Severely Disabled (41 U.S.C. 46-48), may be counted toward the Contractor's small business subcontracting goal.

(e) A mentor firm, under the Pilot Mentor-Protege Program established under Section 831 of Pub. L. 101-510, as amended, may count toward its small disadvantaged business goal, subcontracts awarded--

(1) Protege firms which are qualified organizations employing the severely handicapped; and

(2) Former protege firms that meet the criteria in Section 831(g)(4) of Pub. L. 101-510.

(f) The master plan approval referred to in paragraph (f) of the FAR 52.219-9 clause is approval by the Contractor's cognizant contract administration activity.

(g) In those subcontracting plans which specifically identify small, small disadvantaged, and women-owned businesses, the Contractor shall notify the Administrative Contracting Officer of any substitutions of firms that are not small, small disadvantaged, or women-owned small businesses for the firms listed in the subcontracting plan. Notifications shall be in writing and shall occur within a reasonable period of time after award of the subcontract. Contractor-specified formats shall be acceptable.

31. DFARS 252.219-7004 SMALL, SMALL DISADVANTAGED AND WOMEN-OWNED SMALL BUSINESS SUBCONTRACTING PLAN (TEST PROGRAM) (JUN 1997)

(a) Definition. "Subcontract," as used in this clause, means any agreement (other than one involving an employer-employee relationship) entered into by a Federal Government prime Contractor or subcontractor calling for supplies or services required for performance of the contract or subcontract.

(b) The Offeror's comprehensive small business subcontracting plan and its successors, which are authorized by and approved under the test program of Section 834 of Pub. L. 101-189, shall be included in and made a part of the resultant contract. Upon expulsion from the test program or expiration of the test program, the Contractor shall negotiate an individual subcontracting plan for all future contracts that meet the requirements of Section 211 of Publ. L. 95-507.

(c) The Contractor shall submit Standard Form 295, Summary Subcontract Report, in accordance with the instructions on the form, except--

(1) One copy of SF 295 and attachments shall be submitted to Director, Small and Disadvantaged Business Utilization, Office of the Deputy Under Secretary of Defense (International and Commercial Programs), 3061 Defense Pentagon, Room 2A338, Washington, DC 20301-3061; and

(2) Item 14, Remarks, shall be completed to include semi-annual cumulative--

(1) Small business, small disadvantaged business and women-owned small business goals; and

(2) Small business and small disadvantaged business goals, actual accomplishments, and percentages for each of the two designated industry categories.

(d) The failure of the Contractor or subcontractor to comply in good faith with (1) the clause of this contract entitled "Utilization of Small, Small Disadvantaged and Women-Owned Small Business Concerns," or (2) an approved plan required by this clause, shall be a material breach of the contract.

32. *FAR 52.222-3 CONVICT LABOR (AUG 1996)

The Contractor agrees not to employ in the performance of this contract any person undergoing a sentence of imprisonment which has been imposed by any court of a State, the District of Columbia, the Commonwealth of Puerto Rico, the Virgin Islands, Guam, American Samoa, the Commonwealth of the Northern Mariana Islands, or the Trust Territory of the Pacific Islands. This limitation, however, shall not prohibit the employment by the Contractor in the performance of this contract of persons on parole or probation to work at paid employment during the term of their sentence or persons who have been pardoned or who have served their terms. Nor shall it prohibit the employment by the Contractor in the performance of this contract of persons confined for violation of the laws of any of the States, the District of Columbia, the Commonwealth of Puerto Rico, the Virgin Islands, Guam, American Samoa, the Commonwealth of the Northern Mariana Islands, or the Trust Territory of the Pacific Islands who are authorized to work at paid employment in the community under the laws of such jurisdiction, if --

(a) (1) The worker is paid or is in an approved work training program on a voluntary basis;

(2) Representatives of local union central bodies or similar labor union organizations have been consulted;

(3) Such paid employment will not result in the displacement of employed workers, or be applied in skills, crafts, or trades in which there is a surplus of available gainful labor in the locality, or impair existing contracts for services; and

(4) The rates of pay and other conditions of employment will not be less than those paid or provided for work of a similar nature in the locality in which the work is being performed; and

(b) The Attorney General of the United States has certified that the work-release laws or regulations of the jurisdiction involved are in conformity with the requirements of Executive Order 11755, as amended by Executive Orders 12608 and 12943.

33. *FAR 52.222-4 CONTRACT WORK HOURS AND SAFETY STANDARDS ACT—OVERTIME COMPENSATION (SEPT 2000)

(a) *Overtime requirements.* No Contractor or subcontractor employing laborers or mechanics (see Federal Acquisition Regulation 22.300) shall require or permit them to work over 40 hours in any workweek unless they are paid at least 1 and 1/2 times the basic rate of pay for each hour worked over 40 hours.

(b) *Violation; liability for unpaid wages; liquidated damages*. The responsible Contractor and subcontractor are liable for unpaid wages if they violate the terms in paragraph (a) of this clause. In addition, the Contractor and subcontractor are liable for liquidated damages payable to the Government. The Contracting Officer will assess liquidated damages at the rate of $10 per affected employee for each calendar day on which the employer required or permitted the employee to work in excess of the standard workweek of 40 hours without paying overtime wages required by the Contract Work Hours and Safety Standards Act.

(c) *Withholding for unpaid wages and liquidated damages*. The Contracting Officer will withhold from payments due under the contract sufficient funds required to satisfy any Contractor or subcontractor liabilities for unpaid wages and liquidated damages. If amounts withheld under the contract are insufficient to satisfy Contractor or subcontractor liabilities, the Contracting Officer will withhold payments from other Federal or Federally assisted contracts held by the same Contractor that are subject to the Contract Work Hours and Safety Standards Act.

(d) *Payrolls and basic records*. (1) The Contractor and its subcontractors shall maintain payrolls and basic payroll records for all laborers and mechanics working on the contract during the contract and shall make them available to the Government until 3 years after contract completion. The records shall contain the name and address of each employee, social security number, labor classifications, hourly rates of wages paid, daily and weekly number of hours worked, deductions made, and actual wages paid. The records need not duplicate those required for construction work by Department of Labor regulations at 29 CFR 5.5(a)(3) implementing the Davis-Bacon Act .

(2) The Contractor and its subcontractors shall allow authorized representatives of the Contracting Officer or the Department of Labor to inspect, copy, or transcribe records maintained under paragraph (d)(1) of this clause. The Contractor or subcontractor also shall allow authorized representatives of the Contracting Officer or Department of Labor to interview employees in the workplace during working hours.

(e) *Subcontracts*. The Contractor shall insert the provisions set forth in paragraphs (a) through (d) of this clause in subcontracts exceeding $100,000 and require subcontractors to include these provisions in any lower-tier subcontracts. The Contractor shall be responsible for compliance by any subcontractor or lower-tier subcontractor with the provisions set forth in paragraphs (a) through (d) of this clause.

(End of clause)

34. *FAR 52.222-6 DAVIS-BACON ACT (FEB 1995)

(a) All laborers and mechanics employed or working upon the site of the work will be paid unconditionally and not less often than once a week, and without subsequent deduction or rebate on any account (except such payroll deductions as are permitted by regulations issued by the Secretary of Labor under the Copeland Act (29 CFR Part 3)), the full amount of wages and bona fide fringe benefits (or cash equivalents thereof) due at time of payment computed at rates not less than those contained in the wage determination of the Secretary of Labor which is attached hereto and made a part hereof, regardless of any contractual relationship which may be alleged to exist between the Contractor and such laborers and mechanics. Contributions made or costs reasonably anticipated for bona fide fringe benefits under section 1(b)(2) of the Davis-Bacon Act on behalf of laborers or mechanics are considered wages paid to such laborers or mechanics, subject to the provisions of paragraph (d) of this clause; also, regular contributions made or costs incurred for more than a weekly period (but not less often than quarterly) under plans, funds, or programs which cover the particular weekly period, are deemed to be constructively made or incurred during such period. Such laborers and mechanics shall be paid not less than the appropriate wage rate and fringe benefits in the wage determination for the classification of work actually performed, without regard to skill, except as provided in the clause entitled Apprentices and Trainees. Laborers or mechanics performing work in more than one classification may be compensated at the rate specified for each classification for the time actually worked therein; provided, that the employer's payroll records accurately set forth the time spent in each classification in which work is performed. The wage determination (including any additional classifications and wage rates conformed under paragraph (b) of this clause) and the Davis-Bacon poster (WH-1321) shall be posted at all times by the Contractor and its subcontractors at the site of the work in a prominent and accessible place where it can be easily seen by the workers.

(b) (1) The Contracting Officer shall require that any cl ass of laborers or mechanics, which is not listed in the wage determination and which is to be employed under the contract shall be classified in conformance with the wage determination. The Contracting Officer shall approve an additional classifica tion and wage rate and fringe benefits therefor only when all the following criteria have been met:

(i) The work to be performed by the classification requested is not performed by a classification in the wage determination.

(ii) The classification is utilized in the area by the construction industry.

(iii) The proposed wage rate, including any bona fide fringe benefits, bears a reasonable relationship to the wage rates contained in the wage determination.

(2) If the Contractor and laborers and mechanics to be employed in the classification (if known), or their representatives, and the Contracting Officer agree on the classification and wage rate (including the amount designated for fringe benefits, where appropriate), a report of the action taken shall be sent by the Contracting Officer to the Administrator of the Wage and Hour Division, Employment Standards Administration, U.S. Department of Labor, Washington, DC 20210. The Administrator or an authorized representative will approve, modify, or disapprove every additional classification action within 30 days of receipt and so advise the Contracting Officer or will notify the Contracting Officer within the 30-day period that additional time is necessary.

(3) In the event the Contractor, the laborers or mechanics to be employed in the classification, or their representatives, and the Contracting Officer do not agree on the proposed classification and wage rate (including the amount designated for fringe benefits, where appropriate), the Contracting Officer shall refer the questions, including the views of all interested parties and the recommendation of the Contracting Officer, to the Administrator of the Wage and Hour Division for determination. The Administrator, or an authorized representative, will issue a determination within 30 days of receipt and so advise the Contracting Officer or will notify the Contracting Officer within the 30-day period that additional time is necessary.

(4) The wage rate (including fringe benefits, where appropriate) determined pursuan t to subparagraphs (b)(2) and (b)(3) of this clause shall be paid to all workers performing work in the classification under this contract from the first day on which work is performed in the classification.

(c) Whenever the minimum wage rate prescribed in the contract for a class of laborers or mechanics includes a fringe benefit which is not expressed as an hourly rate, the Contractor shall either pay the benefit as stated in the wage determination or shall pay another bona fide fringe benefit or an hourly cash equivalent thereof.

(d) If the Contractor does not make payments to a trustee or other third person, the Contractor may consider as part of the wages of any laborer or mechanic the amount of any costs reasonably anticipated in providing bona fide fringe benefits under a plan or program; provided, that the Secretary of Labor has found, upon the written request of the Contractor, that the applicable standards of the Davis-Bacon Act have been met. The Secretary of Labor may require the Contractor to set aside in a separate account assets for the meeting of obligations under the plan or program.

35. *FAR 52.222-7 WITHHOLDING OF FUNDS (FEB 1988)

The Contracting Officer shall, upon his or her own action or upon written request of an authorized representative of the Department of Labor, withhold or cause to be withheld from the Contractor under this contract or any other Federal contract with the same Prime Contractor, or any other Federally assisted contract subject to Davis-Bacon prevailing wage requirements, which is held by the same Prime Contractor, so much of the accrued payments or advances as may be considered necessary to pay laborers and mechanics, including apprentices, trainees, and helpers, employed by the Contractor or any subcontractor the full amount of wages required by the contract. In the event of failure to pay any laborer or mechanic, including any apprentice, trainee, or helper, employed or working on the site of the work, all or part of the wages required by the contract, the Contracting Officer may, after written notice to the Contractor, take such action as may be necessary to cause the suspension of any further payment, advance, or guarantee of funds until such violations have ceased.

36. *FAR 52.222-8 PAYROLLS AND BASIC RECORDS (FEB 1988)

(a) Payrolls and basic records relating thereto shall be maintained by the Contractor during the course of the work and preserved for a period of 3 years thereafter for all laborers and mechanics working at the site of the work. Such records shall contain the name, address, and social security number of each such worker, his or her correct classification, hourly rates of wages paid (including rates of contributions or costs anticipated for bona fide fringe benefits or cash equivalents thereof of the types described in section 1(b)(2)(B) of the Davis-Bacon Act), daily and weekly number of hours worked, deductions made, and actual wages paid. Whenever the Secretary of Labor has found, under paragraph (d) of the clause entitled Davis-Bacon Act, that the wages of any laborer or mechanic include the amount of any costs reasonably anticipated in providing benefits under a plan or program described in section 1(b)(2)(B) of the Davis-Bacon Act, the Contractor shall maintain records which show that the commitment to provide such benefits is enforceable, that the plan or program is financially responsi ble, and that the plan or program has been communicated in writing to the laborers or mechanics affected and records which show the costs anticipated or the actual cost incurred in providing such benefits. Contractors employing apprentices or trainees under approved programs shall maintain written evidence of the registration of apprenticeship programs and certification of trainee programs, the registration of apprentices and trainees, and the ratios and wage rates prescribed in the applicable programs.

(b) (1) The Contractor shall submit weekly for each week in which any contract work is performed a coy of all payrolls to the Contracting Officer. The payrolls submitted shall set out accurately and completely all of the information required to be maintained under paragraph (a) of this clause. This information may be submitted in any form desired. Optional Form WH-347 (Federal Stock Number 029-005-00014-1) is available for this purpose and may be purchased from the Superintendent of Documents, U.S. Government Printing Office, Washington, DC 20402. The Prime Contractor is responsible for the submission of copies of payrolls by all subcontractors.

(2) Each payroll submitted shall be accompanied by a "Statement of Compliance," signed by the Contractor or subcontractor or his or her agent who pays or supervises the payment of the persons employed under the contract and shall certify--

(i) That the payroll for the payroll period contains the information required to be maintained under paragraph (a) of this clause and that such information is correct and complete ;

(ii) That each laborer or mechanic (including each helper, apprentice, and trainee) employed on the contract during the payroll period has been paid the full weekly wages earned, without rebate, either directly or indirectly, and that no deductions have been made either directly or indirectly, and that no deductions have been made either directly or indirectly from the full wages earned, other than permissible deductions as set forth in the Regulations, 29 CFR Part 3; and

(iii) That each laborer or mechanic has been paid not less than the applicable wage rates and fringe benefits or cash equivalents for the classification of work performed, as specified in the applicable wage determination incorporated into the contract.

(3) The weekly submission of a properly executed certification set forth on the reverse side of Optional Form WH-347 shall satisfy the requirement for submission of the "Statement of Compliance" required by subparagraph (b)(2) of this clause.

(4) The falsification of any of the certifications in this clause may subject the Contractor or subcontractor to civil or criminal prosecution under Section 1001 of Title 18 and Section 3729 of Title 31 of the United States Code.

(c) The Contractor or subcontractor shall make the records required under paragraph (a) of this clause available for inspection, copying, or transcription by the Contracting Officer or authorized representatives of the Contracting Officer or the Department of Labor. The Contractor of subcontractor shall permit the Contracting Officer or representatives of the Contracting Officer or the Department of Labor to interview employees during working hours on the job. If the Contractor or subcontractor fails to submit required records or to make them available, the Contracting Officer may, after written notice to the Contractor, take such action as may be necessary to cause the suspension of any further payment. Furthermore, failure to submit the required records upon request or to make such records available may be grounds for debarment action pursuant to 29 CFR 5.12.

37. *FAR 52.222-9 APPRENTICES AND TRAINEES (FEB 1988)

(a) Apprentices. Apprentices will be permitted to work at less than the predetermined rate for the work they performed when they are employed pursuant to and individually registered in a bona fide apprenticeship program registered with the U.S. Department of Labor, Employment and Training Administration, Bureau of Apprenticeship and Training, or with a State Apprenticeship Agency recognized by the Bureau, or if a person is employed in his or her first 90 days of probationary employment as an apprentice in such an apprenticeship program, who is not individually registered in the program, but who has been certified by the Bureau of Apprenticeship and Training or a State Apprenticeship Agency (where appropriate) to be eligible for probationary employment as an apprentice. The allowable ratio of apprentices to journeymen on the job site in any craft classification shall not be greater than the ratio permitted to the Contractor as to the entire work force under the registered program. Any worker listed on a payroll at an apprentice wage rate, who is not registered or otherwise employed as stated in this paragraph, shall be paid not less than the applicable wage determination for the classification of work actually performed. In addition, any apprentice performing work on the job site in excess of the ratio permitted under the registered program shall be paid not less than the applicable wage rate on the wage determination for the work actually performed. Where a Contractor is performing construction on a project in a locality other than that in which its program is registered, the ratios and wage rates (expressed in percentages of the journeyman's hourly rate) specified in the Contractor's or subcontractor's registered program shall be observed. Every apprentice must be paid at not less than the rate specified in the registered program for the apprentice's level of progress, expressed as a percentage of the journeyman hourly rate specified in the applicable wage determination. Apprentices shall be paid fringe benefits in accordance with the provisions of the apprenticeship program. If the apprenticeship program does not specify fringe benefits, apprentices must be paid the full amount of fringe benefits listed on the wage determination for the applicable classification. If the Administrator determines that a different practice prevails for the applicable apprentice classification, fringes shall be paid in accordance with that determination. In the event the Bureau of Apprenticeship and Training, or a State Apprenticeship Agency recognized by the Bureau, withdraws approval of an apprenticeship program, the Contractor will not longer be permitted to utilize apprentices at less than the applicable predetermined rate for the work performed until an acceptable program is approved.

(b) Trainees. Except as provided in 29 CFR 5.16, trainees will not be permitted to work at less than the predetermined rate for the work performed unless they are employed pursuant to and individually registered in a program which has received prior approval, evidenced by formal certification by the U.S. Department of Labor, Employment and Training Administration. The ratio of trainees to journeymen on the job site shall not be greater than permitted under the plan approved by the Employment and Training Administration. Every trainee must be paid at not less than the rate specified in the approved program for the trainee's level of progress, expressed as a percentage of the journeyman hourly rate specified in the applicable wage determination. Trainees shall be paid

fringe benefits in accordance with the provisions of the trainee program. If the trainee program does not mention fringe benefits, trainees shall be paid the full amount of fringe benefits listed in the wage determination unless the Administrator of the Wage and Hour Division determines that there is an apprenticeship program associated with the corresponding journeyman wage rate in the wage determination which provides for less than full fringe benefits for apprentices. Any employee listed on the payroll at a trainee rate who is not registered and participating in a training plan approved by the Employment and Training Administration shall be paid not less than the applicable wage rate in the wage determination for the classification of work actually performed. In addition, any trainee performing work on the job site in excess of the ratio permitted under the registered program shall be paid not less than the applicable wage rate in the wage determination for the work actually performed. In the event the Employment and Training Administration withdraws approval of a training program, the Contractor will no longer be permitted to utilize trainees at less than the applicable predetermined rate for the work performed until an acceptable program is approved.

(c) Equal employment opportunity. The utilization of apprentices, trainees, and journeymen under this clause shall be inconformity with the equal employment opportunity requirements of Executive Order 11246, as amended, and 29 CFR Part 30.

38. *FAR 52.222-10 COMPLIANCE WITH COPELAND ACT REQUIREMENTS (FEB 1988)

The Contractor shall comply with the requirements of 29 CFR Part 3, which are hereby incorporated by reference in this contract.

39. *FAR 52.222-11 SUBCONTRACTS (LABOR STANDARDS) (FEB 1988)

(a) The Contractor or subcontractor shall insert in any subcontracts the clauses entitled Davis-Bacon Act, Contract Work Hours and Safety Standards Act--Overtime Compensation, Apprentices and Trainees, Payrolls and Basic Records, Compliance with Copeland Act Requirements, Withholding of Funds, Subcontracts (Labor Standards), Contract Termination--Debarment, Disputes Concerning Labor Standards, Compliance with Davis-Bacon and Related Act Regulations ,and Certification of Eligibility, and such other clauses as the Contracting Officer may, by appropriate instructions, require, and also a clause requiring subcontractors to include these clauses in any lower tier subcontracts. The Prime Contractor shall be responsible for compliance by any subcontractor or lower tier subcontractor with all the contract clauses cited in this paragraph.

(b) (1) Within 14 days after award of the contract, the Contractor shall deliver to the Contracting Officer a completed Statement and Acknowledgment Form (SF 1413) for each subcontract, including the subcontractor's signed and dated acknowledgment that the clauses set forth in paragraph (a) of this clause have been included in the subcontract.

(2) Within 14 days after the award of any subsequently awarded subcontract the Contractor shall deliver to the Contracting Officer an updated completed SF 1413 for such additional subcontract.

40. *FAR 52.222-12 CONTRACT TERMINATION--DEBARMENT (FEB 1988)

A breach of the contract clauses entitled Davis-Bacon Act, Contract Work Hours and Safety Standards Act--Overtime Compensation, Apprentices and Trainees, Payrolls and Basic Records, Compliance with Copeland Act Requirements, Subcontracts (Labor Standards), Compliance with Davis-Bacon and Related Act Regulations, or Certification of Eligibility may be grounds for termination of the contract, and for debarment as a Contractor and subcontractor as provided in 29 CFR 5.12.

41. *FAR 52.222-13 COMPLIANCE WITH DAVIS-BACON AND RELATED ACT REGULATIONS (FEB 1988)

All rulings and interpretations of the Davis-Bacon and Related Acts contained in 29 CFR Parts 1, 3, and 5 are hereby incorporated by reference in this contract.

42. *FAR 52.222-14 DISPUTES CONCERNING LABOR STANDARDS (FEB 1988)

The United States Department of Labor has set forth in 29 CFR Parts 5, 6, and 7 procedures for resolving disputes concerning labor standards requirements. Such disputes shall be resolved in accordance with those procedures and not the Disputes clause of this contract. Disputes within the meaning of this clause include disputes between the Contractor (or any of its subcontractors) and the contracting agency the U.S. Department of Labor, or the employees of their representatives.

43. *FAR 52.222-15 CERTIFICATION OF ELIGIBILITY (FEB 1988)

(a) By entering into this contract, the Contractor certifies that neither it (nor he or she) nor any person or firm who has an interest in the Contractor's firm is a person or firm ineligible to be awarded Government contracts by virtue of section 3(a) of the Davis-Bacon Act or 29 CFR 5.12(a)(1).

(b) No part of this contract shall be subcontracted to any person or firm ineligible for award of a Government contract by virtue of section 3(a) of the Davis-Bacon Act or 29 CFR 5.12(a)(1).

(c) The penalty for making false statements is prescribed in the U.S. Criminal Code, 18 U.S.C. 1001.

44. *FAR 52.222-26 EQUAL OPPORTUNITY (FEB 1999)

(a) If, during any 12-month period (including the 12 months preceding the award of this contract), the Contractor has been or is awarded nonexempt Federal contracts and/or subcontracts that have an aggregate value in excess of $10,000, the Contractor shall comply with subparagraphs (b)(1) through (11) of this clause. Upon request, the Contractor shall provide information necessary to determine the applicability of this clause.

(b) During performing this contract, the Contractor agrees as follows:

(1) The Contractor shall not discriminate against any employee or applicant for employment because of race, color, religion, sex, or national origin. However, it shall not be a violation of this clause for the Contractor to extend a publicly announced preference in employment to Indians living on or near an Indian reservation, in connection with employment opportunities on or near an Indian reservation, as permitted by 41 CFR 60-1.5.

(2) The Contractor shall take affirmative action to ensure that applicants are employed, and that employees are treated during employment, without regard to their race, color, religion, sex, or national origin. This shall include, but not be limited to, (i) employment, (ii) upgrading, (iii) demotion, (iv) transfer, (v) recruitment or recruitment advertising, (vi) layoff or termination, (vii) rates of pay or other forms of compensation, and (viii) selection for training, including apprenticeship.

(3) The Contractor shall post in conspicuous places available to employees and applicants for employment the notices to be provided by the Contracting Officer that explain this clause.

(4) The Contractor shall, in all solicitations or advertisements for employees placed by or on behalf of the Contractor, state that all qualified applicants will receive consideration for employment without regard to race, color, religion, sex, or national origin.

(5) The Contractor shall send, to each labor union or representative of workers with which it has a collective bargaining agreement or other contract or understanding, the notice to be provided by the Contracting Officer advising the labor union or workers' representative of the Contractor's commitments under this clause, and post copies of the notice in conspicuous places available to employees and applicants for employment.

(6) The Contractor shall comply with Executive Order 11246, as amended, and the rules, regulations, and orders of the Secretary of Labor.

(7) The Contractor shall furnish to the contracting agency all information required by Executive Order 11246, as amended, and by the rules, regulations, and orders of the Secretary of Labor. The

Contractor shall also file Standard Form 100 (EEO-1), or any successor form, as prescribed in 41 CFR part 60-1. Unless the Contractor has filed within the 12 months preceding the date of contract award, the Contractor shall, within 30 days after contract award, apply to either the regional Office of Federal Contract Compliance Programs (OFCCP) or the local office of the Equal Employment Opportunity Commission for the necessary forms.

(8) The Contractor shall permit access to its premises, during normal business hours, by the contracting agency or the OFCCP for the purpose of conducting on-site compliance evaluations and complaint investigations. The Contractor shall permit the Government to inspect and copy any books, accounts, records (including computerized records), and other material that may be relevant to the matter under investigation and pertinent to compliance with Executive Order 11246, as amended, and rules and regulations that implement the Executive Order.

(9) If the OFCCP determines that the Contractor is not in compliance with this clause or any rule, regulation, or order of the Secretary of Labor, this contract may be canceled, terminated, or suspended in whole or in part and the Contractor may be declared ineligible for further Government contracts, under the procedures authorized in Executive Order 11246, as amended. In addition, sanctions may be imposed and remedies invoked against the Contractor as provided in Executive Order 11246, as amended; in the the rules, regulations, and orders of the Secretary of Labor; or as otherwise provided by law.

(10) The Contractor shall include the terms and conditions of subparagraph (b)(1) through (11) of this clause in every subcontract or purchase order that is not exempted by the rules, regulations, or orders of the Secretary of Labor issued under Executive Order 11246, as amended, so that these terms and conditions will be binding upon each subcontractor or vendor.

(11) The Contractor shall take such action with respect to any subcontract or purchase order as the Contracting Officer may direct as a means of enforcing these terms and conditions ,including sanctions for noncompliance; provided, that if the Contractor becomes involved in, or is threatened with, litigation with a subcontractor or vendor as a result of any direction, the Contractor may request the United States to enter into the litigation to protect the interests of the United States.

(c) Notwithstanding any other clause in this contract, disputes relative to this clause will be governed by the procedures in 41 CFR 60-1.1.

45. *FAR 52.222-27 AFFIRMATIVE ACTION COMPLIANCE REQUIREMENTS FOR CONSTRUCTION (FEB 1999)

(a) Definitions.

"Covered area," as used in this clause, means the geographical area described in the solicitation for this contract.

"Deputy Assistant Secretary," as used in this clause, means the Deputy Assistant Secretary for Federal Contract Compliance, U.S. Department of Labor, or a designee

"Employer's identification number," as used in this clause, means the Federal Social Security number used on the employer's quarterly Federal tax return, U.S. Treasury Department Form 941.

"Minority," as used in this clause, means--

(1) American Indian or Alaskan Native (all persons having origins in any of the original peoples of North America and maintaining identifiable tribal affiliations through membership and participation or community identification).

(2) Asian and Pacific Islander (all persons having origins in any of the original peoples of the Far East, Southeast Asia, the Indian Subcontinent, or the Pacific Islands);

(3) Black (all persons having origins in any of the black African racial groups not of Hispanic origin); and

(4) Hispanic (all persons of Mexican, Puerto Rican, Cuban, Central or South American, or other Spanish culture or origin, regardless of race).

(b) If the Contractor, or a subcontractor at any tier, subcontracts a portion of the work involving any construction trade each such subcontract in excess of $10,000 shall include this clause and the Notice containing the goals for minority and female participation stated in the solicitation for this contract.

(c) If the Contractor is participating in a Hometown Plan (41 CFR 60-4) approved by the U.S. Department of Labor in a covered area, either individually or through an association, its affirmative actin obligations on all work in the plan area (including goals) shall comply with the plan for those trades that have unions

participating in the plan. Contractors must be able to demonstrate participation in, and compliance with, the provisions of the plan. Each Contractor or subcontractor participating in an approved plan is also required to comply with its obligations under the Equal Opportunity clause, and to make a good faith effort to achieve each goal under the plan in each trade in which it has employees. The overall good-faith performance by other Contractors or subcontractors toward a goal in an approved plan does not excuse any Contractor's or subcontractor's failure to make good-faith efforts to achieve the plan's goals.

(d) The Contractor shall implement the affirmative action procedures in subparagraphs (g)(1) through (16) of this clause. The goals stated in the solicitation for this contract are expressed as percentages of the total hours of employment and training of minority and female utilization that the Contractor should reasonably be able to achieve in each construction trade in which it has employees in the covered area. If the Contractor performs construction work in a geographical area located outside of the covered area, it shall apply the goals established for the geographical area where that work is actually performed. The Contractor is expected to make substantially uniform progress toward its goals in each craft.

(e) Neither the terms and conditions of any collective bargaining agreement, nor the failure by a union with which the Contractor has a collective bargaining agreement, to refer minorities or women shall excuse the Contractor's obligations under this clause, Executive Order 11246, as amended, or the regulations thereunder.

(f) In order for the nonworking training hours of apprentices and trainees to be counted in meeting the goals, apprentices and trainees must be employed by the Contractor during the training period, and the Contractor must have made a commitment to employ the apprentices and trainees at the completion of their training, subject to the availability of employment opportunities. Trainees must be trained pursuant to training programs approved by the U.S. Department of Labor.

(g) The Contractor shall take affirmative action to ensure equal employment opportunity. The evaluation of the Contractor's compliance with this clause shall be based upon its effort to achieve maximum results from its actions. The Contractor shall document these efforts fully and implement affirmative action steps at least as extensive as the following:

(1) Ensure a working environment free of harassment, intimidation, and coercion at all sites and in all facilities where the Contractor's employees are assigned to work. The Contractor, if possible, will assign two or more women to each construction project. The Contractor shall ensure that foremen, superintendents, and other onsite supervisory personnel are aware of and carry out the Contractor's obligation to maintain such a working environment, with specific attention to minority or female individuals working at these sites or facilities.

(2) Establish and maintain a current list of sources for minority and female recruitment. Provide written notification to minority and female recruitment sources and community organizations when the Contractor or its unions have employment opportunities available, and maintain a record of the organizations' responses.

(3) Establish and maintain a current file of the names, addresses, and telephone numbers of each minority and female off-the-street applicant, referrals of minorities or females from unions, recruitment sources, or community organizations, and the action taken with respect to each individual. If an individual was sent to the union hiring hall for referral and not referred back to the Contractor by the union or, if referred back, not employed by the Contractor, this shall be documented in the file, along with whatever additional actions the Contractor may have taken.

(4) Immediately notify the Deputy Assistant Secretary when the union or unions with which the Contractor has a collective bargaining agreement has not referred back to the Contractor a minority or woman sent by the Contractor, or when the Contractor has other information that the union referral process has impeded the Contractor's efforts to meet its obligations.

(5) Develop on-the-job training opportunities and/or participate in training programs for the area that expressly include minorities and women, including upgrading programs and apprenticeship and trainee programs relevant to the Contractor's employment needs, especially those programs funded or approved by the Department of Labor. The Contractor shall provide notice of these programs to the sources compiled under subparagraph (g)(2) of this clause.

(6) Disseminate the Contractor's equal employment policy by--

(i) Providing notice of the policy to unions and to training, recruitment, and outreach programs, and requesting their cooperation in assisting the Contractor in meeting its contract obligations;

(ii) Including the policy in any policy manual and in collective bargaining agreements;

(iii) Publicizing the policy in the company newspaper, annual report, etc. ;

(iv) Reviewing the policy with all management personnel and with all minority and female employees at least once a year; and

(v) Posting the policy on bulletin boards accessible to employees at each location where construction work is performed.

(7) Review, at least annually, the Contractor's equal employment policy and affirmative action obligations with all employees having responsibility for hiring, assignment, layoff, termination, or other employment decisions. Conduct review of this policy with all on-site supervisory personnel before initiating construction work at a job site. A written record shall be made and maintained identifying the time and place of these meetings, persons attending, subject matter discussed, and disposition of the subject matter.

(8) Disseminate the Contractor's equal employment policy externally by including it in any advertising in the news media, specifically including minority and female news media. Provide written notification to, and discuss this policy with, other Contractors and subcontractors with which the Contractor does or anticipates doing business.

(9) Direct recruitment efforts, both oral and written, to minority, female, and community organizations, to schools with minority and female students, and to minority and female recruitment and training organizations serving the Contractor's recruitment area and employment needs. Not later than 1 month before the date for acceptance of applications for apprenticeship or training by any recruitment source, send written notification to organizations such as the above, describing the openings, screening procedures, and tests to be used in the selection process.

(10) Encourage present minority and female employees to recruit minority persons and women. Where reasonable, provide after-school, summer, and vacation employment to minority and female youth both on the site and in other areas of the Contractor's workforce.

(11) Validate all tests and other selection requirements where required under 41 CFR 60-3.

(12) Conduct, at least annually, an inventory and evaluation at least of all minority and female personnel for promotional opportunities. Encourage these employees to seek or to prepare for, through appropriate training, etc., opportunities for promotion.

(13) Ensure that seniority practices job classifications, work assignments, and other personnel practices do not have a discriminatory effect by continually monitoring all personnel and employment-related activities to ensure that the Contractor's obligations under this contract are being carried out.

(14) Ensure that all facilities and company activities are nonsegregated except that separate or single-user toilet and necessary changing facilities shall be provided to assure privacy between the sexes.

(15) Maintain a record of solicitations for subcontracts for minority and female construction contractors and suppliers, including circulation of solicitations to minority and female contractor associations and other business associations.

(16) Conduct a review, at lest annually, of all supervisors' adherence to and performance under the Contractor's equal employment policy and affirmative action obligations.

(h) The Contractor is encouraged to participate in voluntary associations that may assist in fulfilling one or more of the affirmative action obligations contained in subparagraphs (g)(1) through (16) of this clause. The efforts of a contractor association, joint contractor-union, contractor-community, or similar group of which the contractor is a member and participant may be asserted as fulfilling one or more of its obligations under subparagraphs (g)(1) through (16) of this clause, provided the Contractor--

(1) Actively participates in the group;

(2) Makes every effort to ensure that the group has a positive impact on the employment of minorities and women in the industry ;

(3) Ensures that concrete benefits of the program are reflected in the Contractor's minority and female workforce participation;

(4) Makes a good-faith effort to meet its individual goals and timetables; and

(5) Can provide access to documentation that demonstrates the effectiveness of actions taken on behalf of the Contractor. The obligation to comply is the Contractor's, and failure of such a group to fulfill an obligation shall not be a defense for the Contractor's noncompliance.

(i) A single goal for minorities and a separate single goal for women shall be established. The Contractor is required to provide equal employment opportunity and to take affirmative action for all minority groups, both male and female, and all women, both minority and nonminority. Consequently, the Contractor may be

in violation of Executive Order 11246, as amended, if a particular group is employed in a substantially disparate manner.

(j) The Contractor shall not use goals or affirmative action standards to discriminate against any person because of race, color, religion, sex, or national origin.

(k) The Contractor shall not enter into any subcontract with any person or firm debarred from Government contracts under Executive Order 11246, as amended.

(l) The Contractor shall carry out such sanctions and penalties for violation of this c lause and of the Equal Opportunity clause, including suspension, termination, and cancellation of existing subcontracts, as may be imposed or ordered under Executive Order 11246, as amended, and its implementing regulations, by the OFCCP. Any failure to carry out these sanctions and penalties as ordered shall be a violation of this clause and Executive Order 11246, as amended.

(m) The Contractor in fulfilling its obligations under this clause shall implement affirmative action procedures at least as extensive as those prescribed in paragraph (g) of this clause, so as to achieve maximum results from its efforts to ensure equal employment opportunity. If the Contractor fails to comply with the requirements of Executive Order 11246, as amended, the implementing regulations, or this clause, the Deputy Assistant Secretary shall take action as prescribed in 41 CFR 60-4.8.

(n) The Contractor shall designate a responsible official to--

(1) Monitor all employment-related activity to ensure that the Contractor's equa l employment policy is being carried out;

(2) Submit reports as may be required by the Government; and

(3) Keep records that shall at least include for each employee the name, address, telephone number, construction trade, union affiliation (if any), employee identification number, social security number, race, sex, status (e.g., mechanic, apprentice, trainee, helper, or laborer), dates of changes in status, hours worked per week in the indicated trade, rate of pay, and locations at which the work was performed. Records shall be maintained in an easily understandable and retrievable form; however, to the degree that existing records satisfy this requirement, separate records are not required to be maintained.

(o) Nothing contained herein shall be construed as a limitation upon the application of other laws that establish different standards of compliance or upon the requirements for the hiring of local or other area residents (e.g., those under the Public Works Employment Act of 1977 and the Community Development Block Grant Program).

46. *FAR 52.222-35 EQUAL OPPORTUNITY FOR SPECIAL DISABLED VETERANS, VETERANS OF THE VIETNAM ERA, AND OTHER ELIGIBLE VETERANS (DEC 2001)

(a) *Definitions.* As used in this clause—

"All employment openings" means all positions except executive and top management, those positions that will be filled from within the Contractor's organization, and positions lasting 3 days or less. This term includes full-time employment, temporary employment of more than 3 days duration, and part-time employment.

"Executive and top management" means any employee—

(1) Whose primary duty consists of the management of the enterprise in which the individual is employed or of a customarily recognized department or subdivision thereof;

(2) Who customarily and regularly directs the work of two or more other employees;

(3) Who has the authority to hire or fire other employees or whose suggestions and recommendations as to the hiring or firing and as to the advancement and promotion or any other change of status of other employees will be given particular weight;

(4) Who customarily and regularly exercises discretionary powers; and

(5) Who does not devote more than 20 percent or, in the case of an employee of a retail or service establishment, who does not devote more than 40 percent of total hours of work in the work week to activities that are not directly and closely related to the performance of the work described in paragraphs (1) through (4) of this definition. This paragraph (5) does not apply in the case of an employee who is in sole charge of an establishment or a physically separated branch establishment, or who owns at least a 20 percent interest in the enterprise in which the individual is employed.

"Other eligible veteran" means any other veteran who served on active duty during a war or in a campaign

or expedition for which a campaign badge has been authorized.

"Positions that will be filled from within the Contractor's organization" means employment openings for which the Contractor will give no consideration to persons outside the Contractor's organization (including any affiliates, subsidiaries, and parent companies) and includes any openings the Contractor proposes to fill from regularly established "recall" lists. The exception does not apply to a particular opening once an employer decides to consider applicants outside of its organization.

"Qualified special disabled veteran" means a special disabled veteran who satisfies the requisite skill, experience, education, and other job-related requirements of the employment position such veteran holds or desires, and who, with or without reasonable accommodation, can perform the essential functions of such position.

"Special disabled veteran" means—

(1) A veteran who is entitled to compensation (or who but for the receipt of military retired pay would be entitled to compensation) under laws administered by the Department of Veterans Affairs for a disability—

(i) Rated at 30 percent or more; or

(ii) Rated at 10 or 20 percent in the case of a veteran who has been determined under 38 U.S.C. 3106 to have a serious employment handicap (*i.e.*, a significant impairment of the veteran's ability to prepare for, obtain, or retain employment consistent with the veteran's abilities, aptitudes, and interests); or

(2) A person who was discharged or released from active duty because of a service-connected disability.

"Veteran of the Vietnam era" means a person who—

(1) Served on active duty for a period of more than 180 days and was discharged or released from active duty with other than a dishonorable discharge, if any part of such active duty occurred—

(i) In the Republic of Vietnam between February 28, 1961, and May 7, 1975; or

(ii) Between August 5, 1964, and May 7, 1975, in all other cases; or

(2) Was discharged or released from active duty for a service-connected disability if any part of the active duty was performed—

(i) In the Republic of Vietnam between February 28, 1961, and May 7, 1975; or

(ii) Between August 5, 1964, and May 7, 1975, in all other cases.

(b) *General*. (1) The Contractor shall not discriminate against the individual because the individual is a special disabled veteran, a veteran of the Vietnam era, or other eligible veteran, regarding any position for which the employee or applicant for employment is qualified. The Contractor shall take affirmative action to employ, advance in employment, and otherwise treat qualified special disabled veterans, veterans of the Vietnam era, and other eligible veterans without discrimination based upon their disability or veterans' status in all employment practices such as—

(i) Recruitment, advertising, and job application procedures;

(ii) Hiring, upgrading, promotion, award of tenure, demotion, transfer, layoff, termination, right of return from layoff and rehiring;

(iii) Rate of pay or any other form of compensation and changes in compensation;

(iv) Job assignments, job classifications, organizational structures, position descriptions, lines of progression, and seniority lists;

(v) Leaves of absence, sick leave, or any other leave;

(vi) Fringe benefits available by virtue of employment, whether or not administered by the Contractor;

(vii) Selection and financial support for training, including apprenticeship, and on-the-job training under 38 U.S.C. 3687, professional meetings, conferences, and other related activities, and selection for leaves of absence to pursue training;

(viii) Activities sponsored by the Contractor including social or recreational programs; and

(ix) Any other term, condition, or privilege of employment.

(2) The Contractor shall comply with the rules, regulations, and relevant orders of the Secretary of Labor issued under the Vietnam Era Veterans' Readjustment Assistance Act of 1972 (the Act), as amended (38 U.S.C. 4211 and 4212).

(c) *Listing openings*. (1) The Contractor shall immediately list all employment openings that exist at the time of the execution of this contract and those which occur during the performance of this contract, including those

not generated by this contract, and including those occurring at an establishment of the Contractor other than the one where the contract is being performed, but excluding those of independently operated corporate affiliates, at an appropriate local public employment service office of the State wherein the opening occurs. Listing employment openings with the U.S. Department of Labor's America's Job Bank shall satisfy the requirement to list jobs with the local employment service office.

(2) The Contractor shall make the listing of employment openings with the local employment service office at least concurrently with using any other recruitment source or effort and shall involve the normal obligations of placing a bona fide job order, including accepting referrals of veterans and nonveterans. This listing of employment openings does not require hiring any particular job applicant or hiring from any particular group of job applicants and is not intended to relieve the Contractor from any requirements of Executive orders or regulations concerning nondiscrimination in employment.

(3) Whenever the Contractor becomes contractually bound to the listing terms of this clause, it shall advise the State public employment agency in each State where it has establishments of the name and location of each hiring location in the State. As long as the Contractor is contractually bound to these terms and has so advised the State agency, it need not advise the State agency of subsequent contracts. The Contractor may advise the State agency when it is no longer bound by this contract clause.

(d) *Applicability*. This clause does not apply to the listing of employment openings that occur and are filled outside the 50 States, the District of Columbia, the Commonwealth of Puerto Rico, the Commonwealth of the Northern Mariana Islands, American Samoa, Guam, the Virgin Islands of the United States, and Wake Island.

(e) *Postings*. (1) The Contractor shall post employment notices in conspicuous places that are available to employees and applicants for employment.

(2) The employment notices shall—

(i) State the rights of applicants and employees as well as the Contractor's obligation under the law to take affirmative action to employ and advance in employment qualified employees and applicants who are special disabled veterans, veterans of the Vietnam era, and other eligible veterans; and

(ii) Be in a form prescribed by the Deputy Assistant Secretary for Federal Contract Compliance Programs, Department of Labor (Deputy Assistant Secretary of Labor), and provided by or through the Contracting Officer.

(3) The Contractor shall ensure that applicants or employees who are special disabled veterans are informed of the contents of the notice (e.g., the Contractor may have the notice read to a visually disabled veteran, or may lower the posted notice so that it can be read by a person in a wheelchair).

(4) The Contractor shall notify each labor union or representative of workers with which it has a collective bargaining agreement, or other contract understanding, that the Contractor is bound by the terms of the Act and is committed to take affirmative action to employ, and advance in employment, qualified special disabled veterans, veterans of the Vietnam era, and other eligible veterans.

(f) *Noncompliance*. If the Contractor does not comply with the requirements of this clause, the Government may take appropriate actions under the rules, regulations, and relevant orders of the Secretary of Labor issued pursuant to the Act.

(g) *Subcontracts*. The Contractor shall insert the terms of this clause in all subcontracts or purchase orders of $25,000 or more unless exempted by rules, regulations, or orders of the Secretary of Labor. The Contractor shall act as specified by the Deputy Assistant Secretary of Labor to enforce the terms, including action for noncompliance.

(End of clause)

47. *FAR 52.222-36 AFFIRMATIVE ACTION FOR WORKERS WITH DISABILITIES (JUN 1998)

(a) General.

(1) Regarding any position for which the employee or applicant for employment is qualified, the Contractor shall not discriminate against any employee or applicant because of physical or mental disability. The Contractor agrees to take affirmative action to employ, advance in employment, and otherwise treat qualified individuals with disabilities without discrimination based upon their physical or mental disability in all employment practices such as--

(i) Recruitment, advertising, and job application procedures;

(ii) Hiring, upgrading, promotion, award of tenure, demotion, transfer, layoff, termination, right of return from layoff, and rehiring;

(iii) Rates of pay or other forms of compensation and changes in compensation;

(iv) Job assignments, job classifications, orgizational structures, position descriptions, lines of progression, and senority lists;

(v) Leaves of absence, sick leave, or any other leave;

(vi) Fringe benefits available by virtue of employment, whether or not administered by the Contractor;

(vii) Selection and financial support for training, including apprenticeships, professional meetings, conferences, and other related activities, and selection for leaves of absence to pursue training;

(viii) Activities sponsored by the Contractor, including social or recreational programs; and

(ix) Any other term, condition, or priviledge of employment.

(2) The Contractor agrees to comply with the rules, regulations, and relevant orders of the Secretary of Labor (Secretary) issued under the Rehabilitation Act of 1973 (29 U.S.C. 793) (the Act), as amended.

(b) Postings.

(1) The Contractor agrees to post employment notices stating--

(i) The Contractor's obligation under the law to take affirmative action to employ and advance in employment qualified individuals with disabilities; and

(ii) The rights of applicants and employees.

(2) These notices shall be posted in conspicuous places that are available to employees and applicants for employment. The Contractor shall ensure that applicants and employees with disabilities are informed of the contents of the notice (e.g., the Contractor may have the notice read to visually disabled individual, or may lower the posted notice so that it might be read by a person in a wheelchair). The notices shall be in a form prescribed by the Deputy Assistant Secretary for Federal Contract Compliance of the U.S. Department of Labor (Deputy Assistant Secretary) and shall be provided by or through the Contracting Officer.

(3) The Contractor shall notify each labor union or representative of workers with which it has a collective bargaining agreement or other contract understanding, that the Contractor is bound by the terms of Section 503 of the Act and is committed to take affirmative action to employ, and advance in employment, qualified individuals with physical or mental disabilities.

(c) Noncompliance. If the Contractor does not comply with the requirements of this clause, appropriate actions may be taken under the rules, regulations, and relevant orders of the Secretary issued pursuant to the Act.

(d) Subcontracts. The Contractor shall include the terms of this clause in every subcontract or purchase order in excess of $10,000 unless exempted by rules, regulations, or orders of the Secretary. The Contractor shall act as specified by the Deputy Assistant Secretary to enforce the terms, including action for noncompliance.

48. *FAR 52.222-37 EMPLOYMENT REPORTS ON SPECIAL DISABLED VETERANS, VETERANS OF THE VIETNAM ERA, AND OTHER ELIGIBLE VETERANS (DEC 2001)

(a) Unless the Contractor is a State or local government agency, the Contractor shall report at least annually, as required by the Secretary of Labor, on—

(1) The number of special disabled veterans, the number of veterans of the Vietnam era, and other eligible veterans in the workforce of the Contractor by job category and hiring location; and

(2) The total number of new employees hired during the period covered by the report, and of the total, the number of special disabled veterans, the number of veterans of the Vietnam era, and the number of other eligible veterans; and

(3) The maximum number and the minimum number of employees of the Contractor during the period covered by the report.

(b) The Contractor shall report the above items by completing the Form VETS-100, entitled "Federal Contractor Veterans' Employment Report (VETS-100 Report)".

(c) The Contractor shall submit VETS-100 Reports no later than September 30 of each year beginning

September 30, 1988.

(d) The employment activity report required by paragraph (a)(2) of this clause shall reflect total hires during the most recent 12-month period as of the ending date selected for the employment profile report required by paragraph (a)(1) of this clause. Contractors may select an ending date—

(1) As of the end of any pay period between July 1 andAugust 31 of the year the report is due; or

(2) As of December 31, if the Contractor has prior writtenapproval from the Equal Employment Opportunity Commission to do so for purposes of submitting the Employer Information Report EEO-1 (Standard Form 100).

(e) The Contractor shall base the count of veterans reported according to paragraph (a) of this clause on voluntary disclosure. Each Contractor subject to the reporting requirements at 38 U.S.C. 4212 shall invite all special disabled veterans, veterans of the Vietnam era, and other eligible veterans who wish to benefit under the affirmative action program at 38 U.S.C. 4212 to identify themselves to the Contractor. The invitation shall state that—

(1) The information is voluntarily provided;

(2) The information will be kept confidential;

(3) Disclosure or refusal to provide the information will not subject the applicant or employee to any adverse treatment; and

(4) The information will be used only in accordance with the regulations promulgated under 38 U.S.C. 4212.

(f) The Contractor shall insert the terms of this clause in all subcontracts or purchase orders of $25,000 or more unless exempted by rules, regulations, or orders of the Secretary of Labor.

(End of clause)

49. *FAR 52.222-38 COMPLIANCE WITH VETERANS' EMPLOYMENT REPORTING REQUIREMENTS (DEC 2001)

By submission of its offer, the offeror represents that, if it is subject to the reporting requirements of 38 U.S.C. 4212(d) (*i.e.*, if it has any contract containing Federal Acquisition Regulation clause 52.222-37, Employment Reports on Special Disabled Veterans, Veterans of the Vietnam Era, and Other Eligible Veterans), it has submitted the most recent VETS-100 Report required by that clause.

(End of provision)

50. *FAR 52.223-5 POLLUTION PREVENTION AND RIGHT-TO-KNOW INFORMATION (APR 1998) [For Work on Federal Facilities]

(a) Executive Order 12856 of August 3, 1993, requires Federal facilities to comply with the provisions of the Emergency Planning and Community Right-to-Know Act of 1986 (EPCRA) (42 U.S.C. 11001-11050) and the Pollution Prevention Act of 1990 (PPA) (42 U.S.C. 13101-13109).

(b) The Contractor shall provide all information needed by the Federal facility to comply with the emergency planning reporting requirements of Section 302 of EPCRA; the emergency notice requirements of Section 304 of EPCRA; the list of Material Safety Data Sheets required by Section 311 of EPCRA; the emergency and hazardous chemical inventory forms of Section 312 of EPCRA; the toxic chemical release inventory of Section 313 of EPCRA, which includes the reduction and recycling information required by Section 6607 of PPA; and the toxic chemical reduction goals requirements of Section 3-302 of Executive Order 12856.

51. *FAR 52.223-6 DRUG-FREE WORKPLACE (MAY 2001)

(a) Definitions. As used in this clause--

"Controlled substance" means a controlled substance in schedules I through V of section 202 of the Controlled Substances Act (21 U.S.C. 812) and as further defined in regulation at 21 CFR 1308.11 - 1308.15.

"Conviction" means a finding of guilt (including a plea of nolo contendere) or imposition of sentence, or both, by any judicial body charged with the responsibility to determine violations of the Federal or State criminal drug statutes.

"Criminal drug statute" means a Federal or non-Federal criminal statute involving the manufacture, distribution, dispensing, possession or use of any controlled substance.

"Drug-free workplace" means the site(s) for the performance of work done by the Contractor in connection with a specific contract where employees of the Contractor are prohibited from engaging in the unlawful manufacture, distribution, dispensing, possession, or use of a controlled substance.

"Employee" means an employee of a Contractor directly engaged in the performance of work under a Government contract. "Directly engaged" is defined to include all direct cost employees and any other Contractor employee who has other than a minimal impact or involvement in contract performance.

"Individual" means an offeror/contractor that has no more than one employee including the offeror/contractor.

(b) The Contractor, if other than an individual, shall--within 30 days after award (unless a longer period is agreed to in writing for contracts of 30 days or more performance duration), or as soon as possible for contracts of less than 30 days performance duration--

(1) Publish a statement notifying its employees that the unlawful manufacture, distribution, dispensing, possession, or use of a controlled substance is prohibited in the Contractor's workplace and specifying the actions that will be taken against employees for violations of such prohibition;

(2) Establish an ongoing drug-free awareness program to inform such employees about--

(i) The dangers of drug abuse in the workplace;

(ii) The Contractor's policy of maintaining a drug-free workplace;

(iii) Any available drug counseling, rehabilitation, and employee assistance programs; and

(iv) The penalties that may be imposed upon employees for drug abuse violations occurring in the workplace.

(3) Provide all employees engaged in performance of the contract with a copy of the statement required by subparagraph (b)(1) of this clause;

(4) Notify such employees in writing in the statement required by subparagraph (b)(1) of this clause that, as a condition of continued employment on this contract, the employee will--

(i) Abide by the terms of the statement; and

(ii) Notify the employer in writing of the employee's conviction under a criminal drug statute for a violation occurring in the workplace no later than 5 days after such conviction.

(5) Notify the Contracting Officer in writing within 10 days after receiving notice under subdivision (b)(4)(ii) of this clause, from an employee or otherwise receiving actual notice of such conviction. The notice shall include the position title of the employee;

(6) Within 30 days after receiving notice under subdivision (b)(4)(ii) of this clause of a conviction, take one of the following actions with respect to any employee who is convicted of a drug abuse violation occurring in the workplace:

(i) Taking appropriate personnel action against such employee, up to and including termination; or

(ii) Require such employee to satisfactorily participate in a drug abuse assistance or rehabilitation program approved for such purposes by a Federal, State, or local health, law enforcement, or other appropriate agency; and

(7) Make a good faith effort to maintain a drug-free workplace through implementation of subparagraphs (b)(1) through (b)(6) of this clause.

(c) The Contractor, if an individual, agrees by award of the contract or acceptance of a purchase order, not to engage in the unlawful manufacture, distribution, dispensing, possession, or use of a controlled substance while performing this contract.

(d) In addition to other remedies available to the Government, the Contractor's failure to comply with the requirements of paragraph (b) or (c) of this clause may, pursuant to FAR 23.560, render the Contractor subject to suspension of contract payments, termination of the contract for default, and suspension or debarment.

52. FAR 52.223-9 ESTIMATE OF PERCENTAGE OF RECOVERED MATERIAL CONTENT FOR EPA-DESIGNATED PRODUCTS (AUG 2000) [For Contracts exceeding $100,000. EPA Designated product (available at http://www.epa.gov/cpg/)]

(a) Definitions. As used in this clause—

"Postconsumer material" means a material or finished product that has served its intended use and has been discarded for disposal or recovery, having completed its life as a consumer item. Postconsumer material is a part of the broader category of "recovered material."

"Recovered material" means waste materials and by-products recovered or diverted from solid waste, but the term does not include those materials and by-products generated from, and commonly reused within, an original manufacturing process.

(b) The Contractor, on completion of this contract, shall—

(1) Estimate the percentage of the total recovered material used in contract performance, including, if applicable, the percentage of postconsumer material content; and

(2) Submit this estimate to the Contracting Officer.

(End of clause)

53. *FAR 52.223-14 TOXIC CHEMICAL RELEASE REPORTING (OCT 2000)[For Contracts Over $100,000]

(a) Unless otherwise exempt, the Contractor, as owner or operator of a facility used in the performance of this contract, shall file by July 1 for the prior calendar year an annual Toxic Chemical Release Inventory Form (Form R) as described in sections 313(a) and (g) of the Emergency Planning and Community Right -to-Know Act of 1986 (EPCRA) (42 U.S.C. 11023(a) and (g)), and section 6607 of the Pollution Prevention Act of 1990 (PPA) (42 U.S.C. 13106). The Contractor shall file, for each facility subject to the Form R filing and reporting requirements, the annual Form R throughout the life of the contract.

(b) A Contractor owned or operated facility use in the performance of this contract is exempt from the requirement to file an annual Form R if--

(1) The facility does not manufacture, process or otherwise use any toxic chemicals listed under section 313(c) of EPCRA, 42 U.S.C. 11023(c);

(2) The facility does not have 10 or more full-time employees as specified in section 313(b)(1)(A) of EPCRA, 42 U.S.C. 11023(b)(1)(A);

(3) The facility does not meet the reporting thresholds of toxic chemicals established under section 313(f) of EPCRA, 42 U.S.C. 11023(f) (including the alternate thresholds at 40 CFR 372.27, provided an appropriate certification form has been filed with EPA);

(4) The facility does not fall within Standard Industrial Classification Code (SIC) major groups 20 through 39 or their corresponding North American Industry Classification System (NAICS) sectors 31 through 33; or

(5) The facility is not located within any State of the United States, the District of Columbia, the Commonwealth of Puerto Rica, Guam, American Samoa, the United States Virgin Islands, the Norther Mariana Islands, or any other territory or possession over which the United States has jurisdiction.

(c) If the Contractor has certified to an exemption in accordance with one or more of the criteria in paragraph (b) of this clause, and after award of the contract circumstances change so that any one of its owned or operated facilities used in the performance of this contract is no longer exempt-

(1) The Contractor shall notify the Contracting Officer;

and

(2) The Contractor, as owner or operator of a facility used in the performance of this contract is no longer exempt, shall (i) submit a Toxic Chemical Release Inventory Form (Form R) on or before July 1 for the prior

calendar year during which the facility becomes eligible; and (ii) continue to file the annual Form R for the life of the contract for such facility.

(d) The Contracting Officer may terminate this contract or take other action as appropriate, if the Contractor fails to comply accurately and fully with the EPCRA and PPA toxic chemical release filing and reporting requirements.

(e) Except for acquisitions of commercial items, as defined in FAR Part 2, the Contractor shall -

(1) For competitive subcontracts expected to exceed $100,000 (including all options), include a solicitation provision substantially the same as the provision at FAR 52.223-13, Certification of Toxic Chemical Release Reporting; and

(2) Include in any resultant subcontract exceeding $100,000 (including all options), the substance of this clause, except this paragraph (e).

54. RESERVED

55. DFARS 252.223-7006 PROHIBITION ON STORAGE AND DISPOSAL OF TOXIC AND HAZARDOUS MATERIALS (APR 1993)

(a) Definitions. As used in this clause--

(1) "Storage" means a non-transitory, semi-permanent or permanent holding, placement, or leaving of material. It does not include a temporary accumulation of a limited quantity of a material used in or a waste generated or resulting from authorized activities, such as servicing, maintenance, or repair of Department of Defense (DoD) items, equipment, or facilities.

(2) "Toxic or hazardous materials" means:

(i) Materials referred to in section 101(14) of the Comprehensive Environmental Response, Compensation, and Liability Act (CERCLA) of 1980 (42 U.S.C. 9601(14)) and materials designated under section 102 of CERCLA (42 U.S.C. 9602) (40 CFR Part 302);

(ii) Materials that are of an explosive, flammable, or pyrotechnic nature; or

(iii) Materials otherwise identified by the Secretary of Defense as specified in DoD regulations.

(b) In accordance with 10 U.S.C. 2692, the Contractor is prohibited from storing or disposing of non-DoD-owned toxic or hazardous materials on a DoD installation, except to the extent authorized by a statutory exception to 10 U.S.C. 2692 or as authorized by the Secretary of Defense or his designee.

56. *FAR 52.225-9 BUY AMERICAN ACT—BALANCE OF PAYMENT PROGRAM—CONSTRUCTION MATERIALS (FEB 2002) (<u>For Contracts less than $6.806 million</u>)

(a) *Definitions.* As used in this clause—

"Component" means any article, material, or supply incorporated directly into a construction material.

"Construction material" means an article, material, or supply brought to the construction site by the Contractor or a subcontractor for incorporation into the building or work. The term also includes an item brought to the site preassembled from articles, materials, or supplies. However, emergency life safety systems, such as emergency lighting, fire alarm, and audio evacuation systems, that are discrete systems incorporated into a public building or work and that are produced as complete systems, are evaluated as a single and distinct construction material regardless of when or how the individual parts or components of those systems are delivered to the construction site. Materials purchased directly by the Government are supplies, not construction material.

"Cost of components" means—

(1) For components purchased by the Contractor, the acquisition cost, including transportation costs to the place of incorporation into the construction material (whether or not such costs are paid to a domestic firm),

and any applicable duty (whether or not a duty-free entry certificate is issued); or

(2) For components manufactured by the Contractor, all costs associated with the manufacture of the component, including transportation costs as described in paragraph (1) of this definition, plus allocable overhead costs, but excluding profit. Cost of components does not include any costs associated with the manufacture of the end product.

"Domestic construction material" means—

(1) An unmanufactured construction material mined or produced in the United States; or

(2) Aconstruction material manufactured in the United States, if the cost of its components mined, produced, or manufactured in the United States exceeds 50 percent of the cost of all its components. Components of foreign origin of the same class or kind for which nonavailability determinations have been made are treated as domestic.

"Foreign construction material" means a construction material other than a domestic construction material.

"United States" means the 50 States and the District of Columbia, U.S. territories and possessions, Puerto Rico, the Northern Mariana Islands, and any other place subject to U.S. jurisdiction, but does not include leased bases.

(b) *Domestic preference*. (1) This clause implements the Buy American Act (41 U.S.C. 10a - 10d) and the Balance of Payments Program by providing a preference for domestic construction material. The Contractor shall use only domestic construction material in performing this contract, except as provided in paragraphs (b)(2) and (b)(3) of this clause.

(2) This requirement does not apply to the construction material or components listed by the Government as follows:

_____

[*Contracting Officer to list applicable excepted materials or indicate "none"*]

(3) The Contracting Officer may add other foreign construction material to the list in paragraph (b)(2) of this clause if the Government determines that—

(i) The cost of domestic construction material would be unreasonable. The cost of a particular domestic construction material subject to the requirements of the Buy American Act is unreasonable when the cost of such material exceeds the cost of foreign material by more than 6 percent. For determination of unreasonable cost under the Balance of Payments Program, the Contracting Officer will use a factor of 50 percent;

(ii) The application of the restriction of the Buy American Act or Balance of Payments Program to a particular construction material would be impracticable or inconsistent with the public interest; or

(iii) The construction material is not mined, produced, or manufactured in the United States in sufficient and reasonably available commercial quantities of a satisfactory quality.

(c) *Request for determination of inapplicability of the Buy American Act or Balance of Payments Program*. (1)(i) Any Contractor request to use foreign construction material in accordance with paragraph (b)(3) of this clause shall include adequate information for Government evaluation of the request, including—

(A) A description of the foreign and domestic construction materials;

(B) Unit of measure;

(C) Quantity;

(D) Price;

(E) Time of delivery or availability;

(F) Location of the construction project;

(G) Name and address of the proposed supplier; and

(H) A detailed justification of the reason for use of foreign construction materials cited in accordance with paragraph (b)(3) of this clause.

(ii) A request based on unreasonable cost shall include a reasonable survey of the market and a completed price comparison table in the format in paragraph (d) of this clause.

(iii) The price of construction material shall include all delivery costs to the construction site and any applicable duty (whether or not a duty-free certificate may be issued).

(iv) Any Contractor request for a determination submitted after contract award shall explain why the Contractor could not reasonably foresee the need for such determination and could not have requested the determination before contract award. If the Contractor does not submit a satisfactory explanation, the Contracting Officer need not make a determination.

(2) If the Government determines after contract award that an exception to the Buy American Act or Balance of Payments Program applies and the Contracting Officer and the Contractor negotiate adequate consideration, the Contracting Officer will modify the contract to allow use of the foreign construction material. However, when the basis for the exception is the unreasonable price of a domestic construction material, adequate consideration is not less than the differential established in paragraph (b)(3)(i) of this clause.

(3) Unless the Government determines that an exception to the Buy American Act or Balance of Payments Program applies, use of foreign construction material is non-compliant with the Buy American Act or Balance of Payments Program.

(d) *Data.* To permit evaluation of requests under paragraph (c) of this clause based on unreasonable cost, the Contractor shall include the following information and any applicable supporting data based on the survey of suppliers:

57. *FAR 52.225-10 NOTICE OF BUY AMERICAN ACT/BALANCE OF PAYMENTS PROGRAM REQUIREMENT—CONSTRUCTION MATERIALS (FEB 2000) (Applicable with FAR 52.225-9)

(a) *Definitions.* "Construction material," "domestic construction material," and "foreign construction material," as used in this provision, are defined in the clause of this solicitation entitled "Buy American Act—Balance of Payments Program—Construction Materials" (Federal Acquisition Regulation (FAR) clause 52.225-9).

(b) *Requests for determinations of inapplicability.* An offeror requesting a determination regarding the inapplicability of the Buy American Act or Balance of Payments Program should submit the request to the Contracting Officer in time to allow a determination before submission of offers. The offeror shall include the information and applicable supporting data required by paragraphs (c) and (d) of the clause at FAR 52.225-9 in the request. If an offeror has not requested a determination regarding the inapplicability of the Buy American Act or Balance of Payments Program before submitting its offer, or has not received a response to a previous request, the offeror shall include the information and supporting data in the offer.

(c) *Evaluation of offers.* (1) The Government will evaluate an offer requesting exception to the requirements of the Buy American Act or Balance of Payments Program, based on claimed unreasonable cost of domestic construction material, by adding to the offered price the appropriate percentage of the cost of such foreign construction material, as specified in paragraph (b)(3)(i) of the clause at FAR 52.225-9.

(2) If evaluation results in a tie between an offeror that requested the substitution of foreign construction material based on unreasonable cost and an offeror that did not request an exception, the Contracting Officer will award to the offeror that did not request an exception based on unreasonable cost.

(d) *Alternate offers.* (1) When an offer includes foreign construction material not listed by the Government in this solicitation in paragraph (b)(2) of the clause at FAR 52.225-9, the offeror also may submit an alternate offer based on use of equivalent domestic construction material.

(2) If an alternate offer is submitted, the offeror shall submit a separate Standard Form 1442 for the alternate offer, and a separate price comparison table prepared in accordance with paragraphs (c) and (d) of the clause at FAR 52.225-9 for the offer that is based on the use of any foreign construction material for which the Government has not yet determined an exception applies.

(3) If the Government determines that a particular exception requested in accordance with paragraph (c) of the clause at FAR 52.225-9 does not apply, the Government will evaluate only those offers based on use of the equivalent domestic construction material, and the offeror shall be required to furnish such domestic construction material. An offer based on use of the foreign construction material for which an exception was

requested—

(i) Will be rejected as nonresponsive if this acquisition is conducted by sealed bidding; or

(ii) May be accepted if revised during negotiations.

(End of provision)

[List name, address, telephone number, and contact for suppliers surveyed. Attach copy of response; if oral, attach summary.]

[Include other applicable supporting information.]

[Include all delivery costs to the construction site and any applicable duty (whether or not a duty-free entry certificate is issued).]*

(End of clause)

58. *FAR 52.225-11 BUY AMERICAN ACT—BALANCE OF PAYMENTS PROGRAM-CONSTRUCTION MATERIALS UNDER TRADE AGREEMENTS (FEB 2002) [For Contracts more than $6,806,000] ALTERNATE I (JUNE 2000) [For Contracts between $6.806 and 7.068419 Million]

(a) *Definitions.* As used in this clause—

"Component" means any article, material, or supply incorporated directly into a construction material.

"Construction material" means an article, material, or supply brought to the construction site by the Contractor or subcontractor for incorporation into the building or work. The term also includes an item brought to the site pre-assembled from articles, materials, or supplies. However, emergency life safety systems, such as emergency lighting, fire alarm, and audio evacuation systems, that are discrete systems incorporated into a public building or work and that are produced as complete systems, are evaluated as a single and distinct construction material regardless of when or how the individual parts or components of those systems are delivered to the construction site. Materials purchased directly by the Government are supplies, not construction material.

"Cost of components" means—

(1) For components purchased by the Contractor, the acquisition cost, including tran sportation costs to the place of incorporation into the construction material (whether or not such costs are paid to a domestic firm), and any applicable duty (whether or not a duty-free entry certificate is issued); or

(2) For components manufactured by the Contractor, all costs associated with the manufacture of the component, including transportation costs as described in paragraph (1) of this definition, plus allocable overhead costs, but excluding profit. Cost of components does not include any costs associated with the manufacture of the end product.

"Designated country" means any of the following countries:

Aruba Kiribati
Austria Korea, Republic of
Bangladesh Lesotho
Belgium Liechtenstein

Benin Luxembourg
Bhutan Malawi
Botswana Maldives
Burkina Faso Mali
Burundi Mozambique
Canada Nepal
Cape Verde Netherlands
Central African Republic Niger
Chad Norway
Comoros Portugal
Denmark Rwanda
Djibouti Sao Tome and Principe
Equatorial Guinea Sierra Leone
Finland Singapore
France Somalia
Gambia Spain
Germany Sweden
Greece Switzerland
Guinea Tanzania U.R.
Guinea-Bissau Togo
Haiti Tuvalu
Hong Kong Uganda
Iceland
Ireland United Kingdom
Israel Vanuatu
Italy Western Samoa
Japan Yemen

"Designated country construction material" means a construction material that—

(1) Is wholly the growth, product, or manufacture of a designated country; or

(2) In the case of a construction material that consists in whole or in part of materials from another country, has been substantially transformed in a designated country into a new and different construction material distinct from the materials from which it was transformed.

"Domestic construction material" means—

(1) An unmanufactured construction material mined or produced in the United States; or

(2) A construction material manufactured in the United States, if the cost of its components mined, produced, or manufactured in the United States exceeds 50 percent of the cost of all its components. Components of foreign origin of the same class or kind for which nonavailability determinations have been made are treated as domestic.

"Foreign construction material" means a construction material other than a domestic construction material.

"North American Free Trade Agreement country" means Canada or Mexico.

"North American Free Trade Agreement country construction material" means a construction material that—

(1) Is wholly the growth, product, or manufacture of a North American Free Trade Agreement (NAFTA) country; or

(2) In the case of a construction material that consists in whole or in part of materials from another country, has been substantially transformed in a NAFTA country into a new and different construction material distinct from the materials from which it was transformed.

"United States" means the 50 States and the District of Columbia, U.S. territories and possessions, Puerto Rico, the Northern Mariana Islands, and any other place subject to U.S. jurisdiction, but does not include leased bases.

(b) *Construction materials.* (1) This clause implements the Buy American Act (41 U.S.C. 10a - 10d) and

the Balance of Payments Program by providing a preference for domestic construction material. In addition, the Contracting Officer has determined that the Trade Agreements Act and the North American Free Trade Agreement (NAFTA) apply to this acquisition. Therefore, the Buy American Act and
Balance of Payments Program restrictions are waived for designated country and NAFTA country construction materials.

(2) The Contractor shall use only domestic, designated country, or NAFTA country construction material in performing this contract, except as provided in paragraphs (b)(3) and (b)(4) of this clause.

(3) The requirement in paragraph (b)(2) of this clause does not apply to the construction materials or components listed by the Government as follows:

_____

[*Contracting Officer to list applicable excepted materials or indicate "none"*]

(4) The Contracting Officer may add other foreign construction material to the list in paragraph (b)(3) of this clause if the Government determines that—

(i) The cost of domestic construction material would be unreasonable. The cost of a particular domestic construction material subject to the restrictions of the Buy American Act is unreasonable when the cost of such material exceeds the cost of foreign material by more than 6 percent. For determination of unreasonable cost under the Balance of Payments Program, the Contracting Officer will use a factor of 50 percent;

(ii) The application of the restriction of the Buy American Act or Balance of Payments Program to a particular construction material would be impracticable or inconsistent with the public interest; or

(iii) The construction material is not mined, produced, or manufactured in the United States in sufficient and reasonably available commercial quantities of a satisfactory quality.

(c) *Request for determination of inapplicability of the Buy American Act or Balance of Payments Program*. (1)(i) Any Contractor request to use foreign construction material in accordance with paragraph (b)(4) of this clause shall include adequate information for Government evaluation of the request, including—

(A) A description of the foreign and domestic construction materials;

(B) Unit of measure;

(C) Quantity;

(D) Price;

(E) Time of delivery or availability;

(F) Location of the construction project;

(G) Name and address of the proposed supplier; and

(H) A detailed justification of the reason for use of foreign construction materials cited in accordance with paragraph (b)(3) of this clause.

(ii) A request based on unreasonable cost shall include a reasonable survey of the market and a completed price comparison table in the format in paragraph (d) of this clause.

(iii) The price of construction material shall include all delivery costs to the construction site and any applicable duty (whether or not a duty-free certificate may be issued).

(iv) Any Contractor request for a determination submitted after contract award shall explain why the Contractor could not reasonably foresee the need for such determination and could not have requested the determination before contract award. If the Contractor does not submit a satisfactory explanation, the Contracting Officer need not make a determination.

(2) If the Government determines after contract award that an exception to the Buy American Act or Balance of Payments Program applies and the Contracting Officer and the Contractor negotiate adequate consideration, the Contracting Officer will modify the contract to allow use of the foreign construction material. However, when the basis for the exception is the unreasonable price of a domestic construction material, adequate consideration is not less than the differential established in paragraph (b)(4)(i) of this clause.

(3) Unless the Government determines that an exception to the Buy American Act or Balance of Payments Program applies, use of foreign construction material is noncompliant with the Buy American Act or Balance of Payments Program.

(d) *Data*. To permit evaluation of requests under paragraph (c) of this clause based on unreasonable cost, the Contractor shall include the following information and any applicable supporting data based on the survey of suppliers:

[List name, address, telephone number, and contact for suppliers surveyed. Attach copy of response; if oral, attach summary.]
[Include other applicable supporting information.]
[Include all delivery costs to the construction site and any applicable duty (whether or not a duty-free entry certificate is issued).]*
(End of clause)

Alternate I (June 2000). As prescribed in 25.1102(c)(3), delete the definitions of "North American Free Trade Agreement country" and "North American Free Trade Agreement country construction material" from the definitions in paragraph (a) of the basic clause and substitute the following paragraphs (b)(1) and (b)(2) for paragraphs (b)(1) and (b)(2) of the basic clause:

(b) *Construction materials*. (1) This clause implements the Buy American Act (41 U.S.C. 10a-10d) and the Balance of Payments Program by providing a preference for domestic construction material. In addition, the Contracting Officer has determined that the Trade Agreements Act applies to this acquisition. Therefore, the Buy American Act and Balance of Payments Program restrictions are waived for designated country construction materials.

(2) The Contractor shall use only domestic or designated country construction material in performing this contract, except as provided in paragraphs (b)(3) and (b)(4) of this clause.

59. *FAR 52.225-12 NOTICE OF BUY AMERICAN ACT/BALANCE OF PAYMENTS PROGRAM REQUIREMENT—CONSTRUCTION MATERIALS UNDER TRADE AGREEMENTS (FEB 2000) [Applicable with FAR 52.225-11]] Alternate II (June 2000) [For Contracts Between 6.806 and 7.068419 Million]

(a) *Definitions.* "Construction material," "designated country construction material," "domestic construction material," "foreign construction material," and "NAFTA country construction material," as used in this provision, are defined in the clause of this solicitation entitled "Buy American Act—Balance of Payments Program—Construction Materials under Trade Agreements" (Federal Acquisition Regulation (FAR) clause 52.225-11).

(b) *Requests for determination of inapplicability*. An offeror requesting a determination regarding the inapplicability of the Buy American Act or Balance of Payments Program should submit the request to the Contracting Officer in time to allow a determination before submission of offers. The offeror shall include the information and applicable supporting data required by paragraphs (c) and (d) of FAR clause 52.225-11 in the request. If an offeror has not requested a determination regarding the inapplicability of the Buy American Act or Balance of Payments Program before submitting its offer, or has not received a response to a previous request, the offeror shall include the information and supporting data in the offer.

(c) *Evaluation of offers*. (1) The Government will evaluate an offer requesting exception to the requirements of the Buy American Act or Balance of Payments Program, based on claimed unreasonable cost of domestic construction materials, by adding to the offered price the appropriate percentage of the cost of such foreign construction material, as specified in paragraph (b)(4)(i) of FAR clause 52.225-11.

(2) If evaluation results in a tie between an offeror that requested the substitution of foreign construction material based on unreasonable cost and an offeror that did not request an exception, the Contracting Officer will award to the offeror that did not request an exception based on unreasonable cost.

(d) *Alternate offers*. (1) When an offer includes foreign construction material, other than designated country or NAFTA country construction material, that is not listed by the Government in this solicitation in paragraph (b)(3) of FAR clause 52.225-11, the offeror also may submit an alternate offer based on use of equivalent domestic, designated country, or NAFTA country construction material.

(2) If an alternate offer is submitted, the offeror shall submit a separate Standard Form 1442 for the alternate offer, and a separate price comparison table prepared in accordance with paragraphs (c) and (d) of FAR

clause 52.225-11 for the offer that is based on the use of any foreign construction material for which the Government has not yet determined an exception applies.

(3) If the Government determines that a particular exception requested in accordance with paragraph (c) of FAR clause 52.225-11 does not apply, the Government will evaluate only those offers based on use of the equivalent domestic, designated country, or NAFTA country construction material, and the offeror shall be required to furnish such domestic, designated country, or NAFTA country construction material. An offer based on use of the foreign construction material for which an exception was requested—

(i) Will be rejected as nonresponsive if this acquisition is conducted by sealed bidding; or

(ii) May be accepted if revised during negotiations.

(End of provision)

Alternate II (June 2000) **[For Contracts between 6.806 and 7.068419 Million]**
As prescribed in 25.1102(d)(3), substitute the following paragraphs (a) and (d) for paragraphs (a) and (d) of the basic provision:

(a) Definitions. "Construction material," "designated country construction material," "domestic construction material," and "foreign construction material," as used in this provision, are defined in the clause of this solicitation entitled "Buy American Act—Balance of Payments Program—Construction Materials under Trade Agreements" (Federal Acquisition Regulation (FAR) clause 52.225-11).

(d) Alternate offers. (1) When an offer includes foreign construction material, other than designated country construction material, that is not listed by the Government in this solicitation in paragraph (b)(3) of FAR clause 52.225-11, the offeror also may submit an alternate offer based on use of equivalent domestic or designated country construction material.

(2) If an alternate offer is submitted, the offeror shall submit a separate Standard Form 1442 for the alternate offer, and a separate price comparison table prepared in accordance with paragraphs (c) and (d) of FAR clause 52.225-11 for the offer that is based on the use of any foreign construction material for which the Government has not yet determined an exception applies.

(3) If the Government determines that a particular exception requested in accordance with paragraph (c) of FAR clause 52.225-11 does not apply, the Government will evaluate only those offers based on use of the equivalent domestic or designated country construction material, and the offeror shall be required to furnish such domestic or designated country construction material. An offer based on use of the foreign construction material for which an exception was requested—

(i) Will be rejected as nonresponsive if this acquisition is conducted by sealed bidding; or

(ii) May be accepted if revised during negotiations.

60. *FAR 52.225-13 RESTRICTIONS ON CERTAIN FOREIGN PURCHASES (JULY 2000)

(a) The Contractor shall not acquire, for use in the performance of this contract, any supplies or services originating from sources within, or that were located in or transported from or through, countries whose products are banned from importation into the United States under regulations of the Office of Foreign Assets Control, Department of the Treasury. Those countries are Cuba, Iran, Iraq, Libya, North Korea, Sudan, the territory of Afghanistan controlled by the Taliban , and Serbia (excluding the territory of Kosovo).

(b) The Contractor shall not acquire for use in the performance of this contract any supplies or services from entities controlled by the government of Iraq.

(c) The Contractor shall insert this clause, including this paragraph (c), in all subcontracts.

(End of clause)

61. *FAR 52.226-1 UTILIZATION OF INDIAN ORGANIZATIONS AND INDIAN-OWNED ECONOMIC ENTERPRISES (JUNE 2000)

(a) Definitions. As used in this clause:

"Indian" means any person who is a member of any Indian tribe, band, group, pueblo, or community that is recognized by the Federal Government as eligible for services from the Bureau of Indian Affairs (BIA) in accordance with 25 U.S.C. 1452(c) and any "Native" as defined in the Alaska Native Claims Settlement Act (43 U.S.C. 1601).

"Indian organization" means the governing body of any Indian tribe or entity established or recognized by the governing body of an Indian tribe for the purposes of 25 U.S.C., chapter 17.

"Indian-owned economic enterprise" means any Indian-owned (as determined by the Secretary of the Interior) commercial, industrial, or business activity established or organized for the purpose of profit, provided that Indian ownership constitutes not less than 51 percent of the enterprise.

"Indian tribe" means any Indian tribe, band, group, pueblo, or community, including native villages and native groups (including corporations organized by Kenai, Juneau, Sitka, and Kodiak) as defined in the Alaska Native Claims Settlement Act, that is recognized by the Federal Government as eligible for services from BIA in accordance with 25 U.S.C. 1452(c).

"Interested party" means a prime contractor or an actual or prospective offeror whose direct economic interest would be affected by the award of a subcontract or by the failure to award a subcontract.

(b) The Contractor shall use its best efforts to give Indian organizations and Indian-owned economic enterprises (25 U.S.C. 1544) the maximum practicable opportunity to participate in the subcontracts it awards to the fullest extent consistent with efficient performance of its contract.

(1) The Contracting Officer and the Contractor, acting in good faith, may rely on the representation of an Indian organization or Indian-owned economic enterprise as to its eligibility, unless an interested party challenges its status or the Contracting Officer has independent reason to question that status. In the event of a challenge to the representation of a subcontractor, the Contracting Officer will refer the matter to the—

U.S. Department of the Interior
Bureau of Indian Affairs (BIA)
Attn: Chief, Division of Contracting and
Grants Administration
1849 C Street, NW,
MS-2626-MIB
Washington, DC 20240-4000.

The BIA will determine the eligibility and notify the Contracting Officer. No incentive payment will be made within 50 working days of subcontract award or while a challenge is pending. If a subcontractor is determined to be an ineligible participant, no incentive payment will be made under the Indian Incentive Program.

(2) The Contractor may request an adjustment under the Indian Incentive Program to the following:

(i) The estimated cost of a cost-type contract.
(ii) The target cost of a cost-plus-incentive-fee prime contract.
(iii) The target cost and ceiling price of a fixed-price incentive prime contract.
(iv) The price of a firm-fixed-price prime contract.

(3) The amount of the adjustment to the prime contract is 5 percent of the estimated cost, target cost, or firm-fixed-price included in the subcontract initially awarded to the Indian organization or Indian-owned economic enterprise.

(4) The Contractor has the burden of proving the amount claimed and must assert its request for an adjustment prior to completion of contract performance.

(c) The Contracting Officer, subject to the terms and conditions of the contract and the availability of funds, will authorize an incentive payment of 5 percent of the amount paid to the subcontractor. The Contracting Officer

will seek funding in accordance with agency procedures.
(End of Clause)

62. *FAR 52.227-1 AUTHORIZATION AND CONSENT (JUL 1995)

(a) The Government authorizes and consents to all use and manufacture, in performing this contract or any subcontract at any tier, of any invention described in and covered by a United States patent

(1) embodied in the structure or composition of any article the delivery of which is accepted by the Government under this contract or

(2) used in machinery, tools, or methods whose use necessarily results from compliance by the Contractor or a subcontractor with

(i) specifications or written provisions forming a part of this contract or

(ii) specific written instructions given by the Contracting Officer directing the manner of performance. The entire liability to the Government for infringement of a patent of the United States shall be determined solely by the provisions of the indemnity clause, if any, included in this contract or any subcontract hereunder (including any lower-tier subcontract), and the Government assumes liability for all other infringement to the extent of the authorization and consent hereinabove granted.

(b) The Contractor agrees to include, and require inclusion of, this clause, suitably modified to identify the parties, in all subcontracts at any tier for supplies or services (including construction, architect-engineer services, and materials, supplies, models, samples, and design or testing services expected to exceed the simplified acquisition threshold) however, omission of this clause from any subcontract, including those at or below the simplified acquisition threshold, does not affect this authorization and consent.

63. *FAR 52.227-2 NOTICE AND ASSISTANCE REGARDING PATENT AND COPYRIGHT INFRINGEMENT (AUG 1996)

(a) The Contractor shall report to the Contracting Officer, promptly and in reasonable written detail, each notice or claim of patent or copy-right infringement based on the performance of this contract of which the Contractor has knowledge.

(b) In the event of any claim or suit against the Government on account of any alleged patent or copyright infringement arising out of the performance of this contract or out of the use of any supplies furnished or work or services performed under this contract, the Contractor shall furnish to the Government, when requested by the Contracting Officer, all evidence and information in possession of the Contractor pertaining to such suit or claim. Such evidence and information shall be furnished at the expense of the Government except where the Contractor has agreed to indemnify the Government.

(c) The Contractor agrees to include, and require inclusion of, this clause in all subcontracts at any tier for supplies or services (including construction and architect-engineer subcontracts and those for material, supplies, models, samples, or design or testing services) expected to exceed the simplified acquisition threshold at FAR 2.101.

64. *FAR 52.227-4 PATENT INDEMNITY--CONSTRUCTION CONTRACTS (APR 1984)

Except as otherwise provided, the Contractor agrees to indemnify the Government and its officers, agents, and employees against liability, including costs and expenses, for infringement upon any United States patent (except a patent issued upon an application that is now or may hereafter be withheld from issue pursuant to a Secrecy Order under 35 U.S.C. 181) arising out of performing this contract or out of the use or disposal by or for the account of the Government of supplies furnished or work performed under this contract.

65. DFARS 252.227-7033 RIGHTS IN SHOP DRAWINGS (APR 1966)

(a) Shop drawings for construction means drawings, submitted to the Government by the Construction Contractor, subcontractor or any lower-tier subcontractor pursuant to a construction contract, showing in detail

(i) the proposed fabrication and assembly of structural elements and (ii) the installation (i.e., form, fit, and attachment details) of materials or equipment. The Government may duplicate, use, and disclose in any manner and for any purpose shop drawings delivered under this contract.

(b) This clause, including this paragraph (b), shall be included in all subcontracts hereunder at any tier.

66. FAR 52.228-1 BID GUARANTEE (SEP 1996) [NOTE: Not required for projects less than $100,000]

(a) Failure to furnish a bid guarantee in the proper form and amount, by the time set for opening of bids, may be cause for rejection of bids.

(b) The bidder shall furnish a bid guarantee in the form of a firm commitment, e.g., bid bond supported by good and sufficient surety or sureties acceptable to the Government, postal money order, certified check, cashier's check, irrevocable letter of credit, or, under Treasury Department regulations, certain bonds or notes of the United States. The Contracting Officer will return bid guarantees, other than bid bonds, (1) to unsuccessful bidders as soon as practicable after the opening of bids; and (2) to the successful bidder upon execution of contractual documents and bonds (including any necessary coinsurance or reinsurance agreements), as required by the bid as accepted.

(c) The amount of the bid guarantee shall be twenty (20%) of the bid price or Three Million Dollars ($3,000,000), whichever is less.

(d) If the successful bidder, upon acceptance of its bid by the Government within the period specified for acceptance, fails to execute all contractual documents or furnish executed bond(s) within 10 days after receipt of the forms by the bidder, the Contracting Officer may terminate the contract for default.

(e) In the event the contract is terminated for default, the bidder is liable for any cost of acquiring the work that exceeds the amount of its bid and the bid guarantee is available to offset the difference.

67. *FAR 52.228-2 ADDITIONAL BOND SECURITY (OCT 1997)

The Contractor shall promptly furnish additional security required to protect the Government and persons supplying labor or materials under this contract if--

(a) Any surety upon any bond, or issuing financial institution for other security, furnished with this contract becomes unacceptable to the Government;

(b) Any surety fails to furnish reports on its financial condition as required by the Government;

(c) The contract price is increased so that the penal sum of any bond becomes inadequate in the opinion of the Contracting Officer; or

(d) An irrevocable letter of credit (ILC) used as security will expire before the end of the period of required security. If the Contractor does not furnish an acceptable extension or replacement ILC, or other acceptable substitute, at least 30 days before an ILC's scheduled expiration, the Contracting Officer has the right to immediately draw on the ILC.

68. *FAR 52.228-5 INSURANCE--WORK ON A GOVERNMENT INSTALLATION (JAN 1997) [For Contracts Exceeding $100,000]

(a) The Contractor shall, at its own expense, provide and maintain during the entire performance of this contract, at least the kinds and minimum amounts of insurance required in the Schedule or elsewhere in the contract.

(b) Before commencing work under this contract, the Contractor shall notify the Contr acting Officer in writing that the required insurance has been obtained. The policies evidencing required insurance shall contain an endorsement to the effect that any cancellation or any material change adversely affecting the Government's interest shall not be effective

(1) for such period as the laws of the State in which this contract is to be performed prescribe, or

(2) until 30 days after the insurer or the Contractor gives written notice to the Contracting Officer, whichever period is longer.

(c) The Contractor shall insert the substance of this clause, including this paragraph (c), in subcontracts under this contract that require work on a Government installation and shall require subcontractors to provide and maintain the insurance required in the Schedule or elsewhere in the contract. The Contractor shall maintain a copy of all subcontractors' proofs of required insurance, and shall make copies available to the Contracting Officer upon request.

69. *FAR 52.228-11 PLEDGES OF ASSETS (FEB 1992)

(a) Offerors shall obtain from each person acting as an individual surety on a bid guarantee, a performance bond, or a payment bond--

(1) Pledge of assets; and

(2) Standard Form 28, Affidavit of Individual Surety.

(b) Pledges of assets from each person acting as an individual surety shall be in the form of--

(1) Evidence of an escrow account containing cash, certificates of deposit, commercial or Government securities, or other assets described in FAR 28.203-2 (except see 28.203-2(b)(2) with respect to Government securities held in book entry form) and/or;

(2) A recorded lien on real estate. The offeror will be required to provide--

(i) Evidence of title in the form of a certificate of title prepared by a title insurance company approved by the United States Department of Justice. This title evidence must show fee simple title vested in the surety along with any concurrent owners; whether any real estate taxes are due and payable; and any recorded encumbrances against the property, including the lien filed in favor of the Government as required by FAR 28.203-3(d);

(ii) Evidence of the amount due under any encumbrance shown in the evidence of title;

(iii) A copy of the current real estate tax assessment of the property or a current appraisal dated no earlier than 6 months prior to the date of the bond, prepared by a professional appraiser who certifies that the appraisal has been conducted in accordance with the generally accepted appraisal standards as reflected in the Uniform Standards of Professional Appraisal Practice, as promulgated by the Appraisal Foundation.

70. *FAR 52.228-12 PROSPECTIVE SUBCONTRACTOR REQUESTS FOR BONDS (OCT 1995)

In accordance with Section 806(a)(3) of Public Law 102-190, as amended by Sections 2091 and 8105 of Pub. L. 103-355, upon the request of a prospective subcontractor or supplier offering to furnish labor or material for the performance of this contract for which a payment bond has been furnished to the Government pursuant to the Miller Act, the Contractor shall promptly provide a copy of such payment bond to the requestor.

71. FAR 52.228-13 ALTERNATIVE PAYMENT PROTECTIONS (JULY 2000) [Applicable only for projects or delivery orders less than $100,000]

(a) The Contractor shall submit one of the following payment protections:

(1) A payment bond.

(2) An irrevocable letter of credit from a federally insured financial institution.

(b) The amount of the payment protection shall be 100 percent of the contract price.

(c) The submission of the payment protection is required within 10 days of contract award.

(d) The payment protection shall provide protection for the full contract performance period plus a one-year period.

(e) Except for escrow agreements and payment bonds, which provide their own protection procedures, the Contracting Officer is authorized to access funds under the payment protection when it has been alleged in writing by a supplier of labor or material that a nonpayment has occurred, and to withhold funds pending resolution by administrative or judicial proceedings or mutual agreement of the parties.

(f) When a tripartite escrow agreement is used, the Contractor shall utilize only suppliers of labor and material that signed the escrow agreement.

72. FAR 52.228-14 IRREVOCABLE LETTER OF CREDIT (DEC 1999)

(a) "Irrevocable letter of credit" (ILC), as used in this clause, means a written commitment by a federally insured financial institution to pay all or part of a stated amount of money, until the expiration date of the letter, upon presentation by the Government (the beneficiary) of a written demand therefor. Neither the financial institution nor the offeror/Contractor can revoke or condition the letter of credit.

(b) If the offeror intends to use an ILC in lieu of a bid bond, or to secure other types of bonds such as performance and payment bonds, the letter of credit and letter of confirmation formats in paragraphs (e) and (f) of this clause shall be used.

(c) The letter of credit shall be irrevocable, shall require presentation of no document other than a written demand and the ILC (including confirming letter, if any), shall be issued/confirmed by an acceptable federally insured financial institution as provided in paragraph (d) of this clause, and --

(1) If used as a bid guarantee, the ILC shall expire no earlier than 60 days after the close of the bid acceptance period;

(2) If used as an alternative to corporate or individual sureties as security for a performance or payment bond, the offeror/Contractor may submit an ILC to cover the entire period of performance or may submit an ILC with an initial expiration date estimated to cover the entire period for which financial security is required or may submit an ILC with an initial expiration that is a minimum period of one year from the date of issuance. The ILC shall provide that, unless the issuer provides the beneficiary written notice of non-renewal of least 60 days in advance of the current expiration date, the ILC is automatically extended without amendment for one year from the expiration date, or any future expiration date, until the period of required coverage is completed and the Contracting Officer provides the financial institution with a written statement waiving the right to payment. The period of required coverage shall be:

(i) For contracts subject to the Miller Act, the later of--

(A) One year following the expected date of final payment;

(B) For performance bonds only, until completion of any warranty period; or

(C) For payment bonds only, until resolution of all claims filed against the payment bond during the one-year period following final payment.

(ii) For contracts not subject to the Miller Act, the later of--

(A) 90 days following final payment; or

(B) For performance bonds only, until completion of any warranty period.

(d) Only federally insured financial institution rated investment grade or higher shall issue or confirm the ILC. The offeror/Contractor shall provide the Contracting Officer a credit rating that indicates the financial institution has the required rating(s) as of the date of issuance of the ILC. Unless the financial institution issuing the ILC had letter of credit business of at least $25 million in the past year, ILCs over $5 million must be confirmed by another acceptable financial institution that had letter of credit business of at least $25 million in the past year.

(e) The following format shall be used by the issuing financial institution to create an ILC:

[Issuing Financial Institution's Letterhead or Name and Address]

Issue Date----------

Irrevocable Letter of Credit No.----------
Account party's name----------
Account party's address----------
For Solicitation No.----------
(For reference only)

TO: [U.S. Government agency]

[U.S. Government agency's address]

1. We hereby establish this irrevocable and transferable Letter of Credit in your favor for one or more drawings up to United States $_____. This Letter of Credit is payable at [issuing financial institution's and, if any, confirming financial institution's] office at [issuing financial institution's address and, if any, confirming financial institution's address] and expires with our close of business on _____, or any automatically extended expiration date.

2. We hereby undertake to honor your or transferee's sight draft(s) drawn on issuing or, if any, the confirming financial institution, for all or any part of this credit if presented with this Letter of Credit and confirmation, if any, at the office specified in paragraph 1 of this Letter of Credit on or before the expiration date or any automatically extended expiration date.

3. [This paragraph is omitted if used as a bid guarantee, and subsequent paragraphs are renumbered.] It is a condition of this Letter of Credit that it is deemed to be automatically extended without amendment for one year from the expiration date hereof, or any future expiration date, unless at least 60 days prior to any expiration date, we notify you or the transferee by registered mail, or other receipted means of delivery, that we elect not to consider this Letter of Credit renewed for any such additional period. At the time we notify you, we also agree to notify the account party (and confirming financial institution, if any) by the same means of delivery.

4. This Letter of Credit is transferable. Transfers and assignments of proceeds are to be effected without charge to either the beneficiary or the transferee/assignee of proceeds. Such transfer or assignment shall be only at the written direction of the Government (the beneficiary) in a form satisfactory to the issuing financial institution and the confirming financial institution, if any.

5. This Letter of Credit is subject to the Uniform Customs and Practice (UCP) for Documentary Credits, 1993 Revision, International Chamber of Commerce Publication No. 500, and to the extent not inconsistent therewith, to the laws of _____ [state of confirming financial institution, if any, otherwise state of issuing financial institution].

6. If this credit expires during an interruption of business of this financial institution as described in Article 17 of the UCP, the financial institution specifically agrees to effect payment if this credit is drawn against within 30 days after the resumption of our business.

Sincerely,

[Issuing financial institution]

(f) The following format shall be used by the financial institution to confirm an ILC:

[Confirming Financial Institution's Letterhead or Name and Address] ---

(Date) _____

Our Letter of Credit
Advice Number----------
Beneficiary:----------
[U.S. Government agency]
Issuing Financial Institution :----------
Issuing Financial Institution's LC No. :----------

Gentlemen:

1. We hereby confirm the above indicated Letter of Credit, the original of which is attached, issued by _____ [name of issuing financial institution] for drawings of up to United States dollars _____/U.S.

$_____ and expiring with our close of business on _____ [the expiration date], or any automatically extended expiration date.

2. Draft(s) drawn under the Letter of Credit and this Confirmation are payable at our office located at _____.

3. We hereby undertake to honor sight draft(s) drawn under and presented with the Letter of Credit and this Confirmation at our offices as specified herein.

4. [This paragraph is omitted if used as a bid guarantee, and subsequent paragraphs are renumbered.] It is a condition of this confirmation that it be deemed automatically extended without amendment for one year from the expiration date hereof, or any automatically extended expiration date, unless:

(a) At least 60 days prior to any such expiration date, we shall notify the Contracting Officer, or the transferee and the issuing financial institution, by registered mail or other receipted means of delivery, that we elect not to consider this confirmation extended for any such additional period; or

(b) The issuing financial institution shall have exercised its right to notify you or the transferee, the account party, and ourselves, of its election not to extend the expiration date of the Letter of Credit.

5. This confirmation is subject to the Uniform Customs and Practice (UCP) for Documentary Credits, 1993 Revision, International Chamber of Commerce Publication No. 500, and to the extent not inconsistent therewith, to the laws of _____ [state of confirming financial institution].

6. If this confirmation expires during an interruption of business of this financial institution as described in Article 17 of the UCP, we specifically agree to effect payment if this credit is drawn against within 30 days after the resumption of our business.

Sincerely,

[Confirming financial institution]

(g) The following format shall be used by the Contracting Officer for a sight draft to draw on the Letter of Credit:

SIGHT DRAFT

[City, State]

(Date) _____

[Name and address of financial institution]

Pay to the order of----------

[Beneficiary Agency] _____

the sum of United States $ _____

This draft is drawn under----------

Irrevocable Letter of Credit No.----------

[Beneficiary Agency]

By: _____

73. FAR 52.228-15 PERFORMANCE AND PAYMENT BONDS (JULY 2000).

[This provision is Not Required for projects less than $100,000. See Clauses "Alternate Payment Protections" and "Inapplicable Provisions and Clauses".]

(a) *Definitions.* As used in this clause—

"Original contract price" means the award price of the contract; or, for requirements contracts, the price payable for the estimated total quantity; or, for indefinite-quantity contracts, the price payable for the specified

minimum quantity. Original contract price does not include the price of any options, except those options exercised at the time of contract award.

(b) *Amount of required bonds*. Unless the resulting contract price is $100,000 or less, the successful offeror shall furnish performance and payment bonds to the Contracting Officer as follows:

(1) *Performance bonds (Standard Form 25).* The penal amount of performance bonds at the time of contract award shall be 100 percent of the original contract price.

(2) *Payment Bonds (Standard Form 25-A).* The penal amount of payment bonds at the time of contract award shall be 100 percent of the original contract price.

(3) *Additional bond protection*. (i) The Government may require additional performance and payment bond protection if the contract price is increased. The increase in protection generally will equal 100 percent of the increase in contract price.

(ii) The Government may secure the additional protection by directing the Contractor t o increase the penal amount of the existing bond or to obtain an additional bond.

(c) *Furnishing executed bonds.* The Contractor shall furnish all executed bonds, including any necessary reinsurance agreements, to the Contracting Officer, within the time period specified in the Bid Guarantee provision of the solicitation, or otherwise specified by the Contracting Officer, but in any event, before starting work.

(d) *Surety or other security for bonds*. The bonds shall be in the form of firm commitment, supported by corporate sureties whose names appear on the list contained in Treasury Department Circular 570, individual sureties, or by other acceptable security such as postal money order, certified check, cashier's check, irrevocable letter of credit, or, in accordance with Treasury Department regulations, certain bonds or notes of the United States. Treasury Circular 570 is published in the Federal Register or may be obtained from the:

U.S. Department of Treasury
Financial Management Service
Surety Bond Branch
401 14th Street, NW, 2nd Floor, West Wing
Washington, DC 20227.

(e) *Notice of subcontractor waiver of protection (40 U.S.C. 270b(c).* Any waiver of the right to sue on the payment bond is void unless it is in writing, signed by the person whose right is waived, and executed after such person has first furnished labor or material for use in the performance of the contract.
(End of clause)

74. FAR 52.229-3 FEDERAL, STATE, AND LOCAL TAXES (JAN 1991) [<u>For Contracts Exceeding $100,000</u>]

(a) "Contract date," as used in this clause, means the date set for bid opening or, if this is a negotiated contract or a modification, the effective date of this contract or modification.

"All applicable Federal, State, and local taxes and duties," as used in this clause, means all taxes and duties, in effect on the contract date, that the taxing authority is imposing and collecting on the transactions or property covered by this contract.

"After-imposed Federal tax," as used in this clause, means any new or increased Federal excise tax or duty, or tax that was exempted or excluded on the contract date but whose exemption was later revoked or reduced during the contract period, on the transactions or property covered by this contract that the Contractor is required to pay or bear as the result of legislative, judicial, or administrative action taking effect after the contract date. It does not include social security tax or other employment taxes.

"After-relieved Federal tax," as used in this clause, means any amount of Federal excise tax or duty, except social security or other employment taxes, that would otherwise have been payable on the transactions or property covered by this contract, but which the Contractor is not required to pay or bear, or for which the Contractor obtains a refund or drawback, as the result of legislative, judicial, or administrative action taking effect after the contract date.

(b) The contract price includes all applicable Federal, State, and local taxes and duties.

(c) The contract price shall be increased by the amount of any after-imposed Federal tax, provided the Contractor warrants in writing that no amount for such newly imposed Federal excise tax or duty or rate increase was included in the contract price, as a contingency reserve or otherwise.

(d) The contract price shall be decreased by the amount of any after-relieved Federal tax.

(e) The contract price shall be decreased by the amount of any Federal excise tax or duty, except social security or other employment taxes, that the Contractor is required to pay or bear, or does not obtain a refund of, through the Contractor's fault, negligence, or failure to follow instructions of the Contracting Officer.

(f) No adjustment shall be made in the contract price under this clause unless the amount of the adjustment exceeds $250.

(g) The Contractor shall promptly notify the Contracting Officer of all matters relating to any Federal excise tax or duty that reasonably may be expected to result in either an increase or decrease in the contract price and shall take appropriate action as the Contracting Officer directs.

(h) The Government shall, without liability, furnish evidence appropriate to establish exemption from any Federal, State, or local tax when the Contractor requests such evidence and a reasonable basis exists to sustain the exemption.

75. *FAR 52.229-5 TAXES--CONTRACTS PERFORMED IN U.S. POSSESSIONS OR PUERTO RICO (APR 1984)

The term "local taxes," as used in the Federal, State, and local taxes clause of this contract, includes taxes imposed by a possession of the United States or by Puerto Rico.

76. DFARS 252.231-7000 SUPPLEMENTAL COST PRINCIPLES (DEC 1991)

When the allowability of costs under this contract is determined in accordance with part 31 of the Federal Acquisition Regulation (FAR) allowability shall also be determined in accordance with part 231 of the DoD FAR Supplement, in effect on the date of this contract.

77. *FAR 52.232-5 PAYMENTS UNDER FIXED-PRICE CONSTRUCTION CONTRACTS (MAY 1997)

(a) Payment of Price. The Government shall pay the Contractor the contract price as provided in this contract.

(b) Progress Payments. The Government shall make progress payments monthly as the work proceeds, or at more frequent intervals as determined by the Contracting Officer, on estimates of work accomplished which meets the standards of quality established under the contract, as approved by the Contracting Officer.

(1) The Contractor's request for progress payments shall include the following substantiation:

(i) An itemization of the amounts requested, related to the various elements of work required by the contract covered by the payment requested.

(ii) A listing of the amount included for work performed by each subcontractor under the contract.

(iii) A listing of the total amount of each subcontract under the contract.

(iv) A listing of the amounts previously paid to each such subcontractor under the contract.

(v) Additional supporting data in a form and detail required by the Contracting Officer.

(2) In the preparation of estimates, the Contracting Officer may authorize material delivered on the site and preparatory work done to be taken into consideration. Material delivered to the Contractor at locations other than the site also may be taken into consideration if --

(i) Consideration is specifically authorized by this contract; and

(ii) The Contractor furnishes satisfactory evidence that it has acquired title to such material and that the material will be used to perform this contract.

(c) Contractor Certification. Along with each request for progress payments, the Contractor shall furnish the following certification, or payment shall not be made: (However, if the Contractor elects to delete paragraph (c)(4) from the certification, the certification is still acceptable.) I hereby certify, to the best of my knowledge and belief, that--

(1) The amounts requested are only for performance in accordance with the specifications, terms, and conditions of the contract;

(2) Payments to subcontractors and suppliers have been made from previous payments received under the contract, and timely payments will be made from the proceeds of the payment covered by this certification, in accordance with subcontract agreements and the requirements of chapter 39 of Title 31, United States Code;

(3) This request for progress payments does not include any amounts which the prime contractor intends to withhold or retain from a subcontractor or supplier in accordance with the terms and conditions of the subcontract; and

(4) This certification is not to be construed as final acceptance of a subcontractor's performance.

(Name)

(Title)

(Date)

(d) Refund of Unearned Amounts. If the Contractor, after making a certified request for progress payments, discovers that a portion or all of such request constitutes a payment for performance by the Contractor that fails to conform to the specifications, terms, and conditions of this contract (hereinafter referred to as the "unearned amount"), the Contractor shall--

(1) Notify the Contracting Officer of such performance deficiency; and

(2) Be obligated to pay the Government an amount (computed by the Contracting Officer in the manner provided in paragraph (j) of this clause) equal to interest on the unearned amount from the 8th day after the date of receipt of the unearned amount until--

(i) The date the Contractor notifies the Contracting Officer that the performance deficiency has been corrected; or

(ii) The date the Contractor reduces the amount of any subsequent certified request for progress payments by an amount equal to the unearned amount.

(e) Retainage. If the Contracting Officer finds that satisfactory progress was achieved during any period for which a progress payment is to be made, the Contracting Officer shall authorize payment to be made in full. However, if satisfactory progress has not been made, the Contracting Officer may retain a maximum of 10 percent of the amount of the payment until satisfactory progress is achieved. When the work is substantially complete, the Contracting Officer may retain from previously withheld funds and future progress payments that amount the Contracting Officer considers adequate for protection of the Government and shall release to the Contractor all the remaining withheld funds. Also, on completion and acceptance of each separate building, public work, or other division of the contract, for which the price is stated separately in the contract, payment shall be made for the completed work without retention of a percentage.

(f) Title, Liability, and Reservation of Rights. All material and work covered by progress payments made shall, at the time of payment, become the sole property of the Government, but this shall not be construed as--

(1) Relieving the Contractor from the sole responsibility for al material and work upon which payments have been made or the restoration of any damaged work; or

(2) Waiving the right of the Government to require the fulfillment of all of the terms of the contract.

(g) Reimbursement for Bond Premiums. In making these progress payments, the Government shall, upon request, reimburse the Contractor for the amount of premiums paid for performance and payment bonds (including coinsurance and reinsurance agreements, when applicable) after the Contractor has furnished evidence of

full payment to the surety. The retainage provisions in paragraph (e) of this clause shall not apply to that portion of progress payments attributable to bond premiums.

(h) Final Payment. The Government shall pay the amount due the Contractor under this contract after--

(1) Completion and acceptance of all work;

(2) Presentation of a properly executed voucher; and

(3) Presentation of release of all claims against the Government arising by virtue of this contract, other than claims, in stated amounts, that the Contractor has specifically excepted from the operation of the release. A release may also be required of the assignee if the Contractor's claim to amounts payable under this contract has been assigned under the Assignment of Claims Act of 1940 (31 U.S.C. 3727 and 41 U.S.C. 15).

(i) Limitation Because of Undefinitized Work. Notwithstanding any provision of this contract, progress payments shall not exceed 80 percent on work accomplished on undefinitized contract actions. A "contract action" is any action resulting in a contract, as defined in FAR Subpart 2.1, including contract modifications for additional supplies or services, but not including contract modifications that are within the scope and under the terms of the contract, such as contract modifications issued pursuant to the Changes clause, or funding and other administrative changes.

(j) Interest Computation on Unearned Amounts. In accordance with 31 U.S.C. 3903(c)(1), the amount payable under subparagraph (d)(2) of this clause shall be--

(1) Computed at the rate of average bond equivalent rates of 91-day Treasury bills auctioned at the most recent auction of such bills prior to the date the Contractor receives the unearned amount; and

(2) Deducted from the next available payment to the Contractor.

78. RESERVED.

79. *FAR 52.232-17 INTEREST (JUN 1996)

(a) Except as otherwise provided in this contract under a Price Reduction for Defective Cost or Pricing Data clause or a Cost Accounting Standards clause, all amounts that become payable by the Contractor to the Government under this contract (net of any applicable tax credit under the Internal Revenue Code (26 U.S.C. 1481)) shall bear simple interest from the date due until paid unless paid within 30 days of becoming due. The interest rate shall be the interest rate established by the Secretary of the Treasury as provided in Section 12 of the Contract Disputes Act of 1978 (Public Law 95-563), which is applicable to the period in which the amount becomes due, as provided in paragraph (b) of this clause, and then at the rate applicable for each six-month period as fixed by the Secretary until the amount is paid.

(b) Amounts shall be due at the earliest of the following dates:

(1) The date fixed under this contract.

(2) The date of the first written demand for payment consistent with this contract, including any demand resulting from a default termination.

(3) The date the Government transmits to the Contractor a proposed supplemental agreement to confirm completed negotiations establishing the amount of debt.

(4) If this contract provides for revision of prices, the date of written notice to the Contractor stating the amount of refund payable in connection with a pricing proposal or a negotiated pricing agreement not confirmed by contract modification.

(c) The interest charge made under this clause may be reduced under the procedures prescribed in 32.614-2 of the Federal Acquisition Regulation in effect on the date of this contract.

80. *FAR 52.232-23 ASSIGNMENT OF CLAIMS (JAN 1986)

(a) The Contractor, under the Assignment of Claims Act, as amended, 31 U.S.C. 3727, 4 1 U.S.C. 15 (hereafter referred to as "the Act"), may assign its rights to be paid amounts due or to become due as a result of the performance of this contract to a bank, trust company, or other financing institution, including any Federal lending

agency. The assignee under such an assignment may thereafter further assign or reassign its right under the original assignment to any type of financing institution described in the preceding sentence.

(b) Any assignment or reassignment authorized under the Act a nd this clause shall cover all unpaid amounts payable under this contract, and shall not be made to more than one party, except that an assignment or reassignment may be made to one party as agent or trustee for two or more parties participating in the financing of this contract.

(c) The Contractor shall not furnish or disclose to any assignee under this contract any classified document (including this contract) or information related to work under this contract until the Contracting Officer authorizes such action in writing.

81. *FAR 52.232-27 PROMPT PAY FOR CONSTRUCTION CONTRACTS (FEB2002)

Notwithstanding any other payment terms in this contract, the Government will make invoice payments under the terms and conditions specified in this clause. The Government considers payment as being made on the day a check is dated or the date of an electronic funds transfer. Definitions of pertinent terms are set forth in sections 2.101, 32.001, and 32.902 of the Federal Acquisition Regulation. All days referred to in this clause are calendar days, unless otherwise specified. (However, see paragraph (a)(3) concerning payments due on Saturdays, Sundays, and legal holidays.)

(a) *Invoice payments*—(1) *Types of invoice payments.* For purposes of this clause, there are several types of invoice payments that may occur under this contract, as follows:

(i) Progress payments, if provided for elsewhere in this contract, based on Contracting Officer approval of the estimated amount and value of work or services performed, including payments for reaching milestones in any project.

(A) The due date for making such payments is 14 days after the designated billing office receives a proper payment request. If the designated billing office fails to annotate the payment request with the actual date of receipt at the time of receipt, the payment due date is the 14th day after the date of the Contractor's payment request, provided the designated billing office receives a proper payment request and there is no disagreement over quantity, quality, or Contractor compliance with contract requirements.

(B) The due date for payment of any amounts retained by the Contracting Officer in accordance with the clause at 52.232–5, Payments Under Fixed-Price Construction Contracts, is as specified in the contract or, if not specified, 30 days after approval by the Contracting Officer for release to the Contractor.

(ii) Final payments based on completion and acceptance of all work and presentation of release of all claims against the Government arising by virtue of the contract, and payments for partial deliveries that have been accepted by the Government (*e.g.*, each separate building, public work, or other division of the contract for which the price is stated separately in the contract).

(A) The due date for making such payments is the later of the following two events:

(*1*) The 30th day after the designated billing office receives a proper invoice from the Contractor.

(*2*) The 30th day after Government acceptance of the work or services completed by the Contractor. For a final invoice when the payment amount is subject to contract settlement actions (*e.g.*, release of claims), acceptance is deemed to occur on the effective date of the contract settlement.

(B) If the designated billing office fails to annotate the invoice with the date of actual receipt at the time of receipt, the invoice payment due date is the 30th day after the date of the Contractor's invoice, provided the designated billing office receives a proper invoice and there is no disagreement over quantity, quality, or Contractor compliance with contract requirements.

(2) *Contractor's invoice.* The Contractor shall prepare and submit invoices to the designated billing office specified in the contract. A proper invoice must include the items listed in paragraphs (a)(2)(i) through (a)(2)(xi) of this clause. If the invoice does not comply with these requirements, the designated billing office must return it within 7 days after receipt, with the reasons why it is not a proper invoice. When computing any interest penalty owed the Contractor, the Government will take into account if the Government notifies the Contractor of an

improper invoice in an untimely manner.

(i) Name and address of the Contractor.

(ii) Invoice date and invoice number. (The Contractor should date invoices as close as possible to the date of mailing or transmission.)

(iii) Contract number or other authorization for work or services performed (including order number and contract line item number).

(iv) Description of work or services performed.

(v) Delivery and payment terms (*e.g.*, discount for prompt payment terms).

(vi) Name and address of Contractor official to whom payment is to be sent (must be the same as that in the contract or in a proper notice of assignment).

(vii) Name (where practicable), title, phone number, and mailing address of person to notify in the event of a defective invoice.

(viii) For payments described in paragraph (a)(1)(i) of this clause, substantiation of the amounts requested and certification in accordance with the requirements of the clause at 52.232–5, Payments Under Fixed-Price Construction Contracts.

(ix) Taxpayer Identification Number (TIN). The Contractor shall include its TIN on the invoice only if required elsewhere in this contract.

(x) Electronic funds transfer (EFT) banking information.

(A) The Contractor shall include EFTbanking information on the invoice only if required elsewhere in this contract.

(B) If EFT banking information is not required to be on the invoice, in order for the invoice to be a proper invoice, the Contractor shall have submitted correct EFT banking information in accordance with the applicable solicitation provision (*e.g.*, 52.232–38, Submission of Electronic Funds Transfer Information with Offer), contract clause (*e.g.*, 52.232–33, Payment by Electronic Funds Transfer—Central Contractor Registration, or 52.232–34, Payment by Electronic Funds Transfer—Other Than Central Contractor Registration), or applicable agency procedures.

(C) EFT banking information is not required if the Government waived the requirement to pay by EFT.

(xi) Any other information or documentation required by the contract.

(3) *Interest penalty.* The designated payment office will pay an interest penalty automatically, without request from the Contractor, if payment is not made by the due date and the conditions listed in paragraphs (a)(3)(i) through (a)(3)(iii) of this clause are met, if applicable. However, when the due date falls on a Saturday, Sunday, or legal holiday, the designated payment office may make payment on the following working day without incurring a late payment interest penalty.

(i) The designated billing office received a proper invoice.

(ii) The Government processed a receiving report or other Government documentation authorizing payment and there was no disagreement over quantity, quality, Contractor compliance with any contract term or condition, or requested progress payment amount.

(iii) In the case of a final invoice for any balance of funds due the Contractor for work or services performed, the amount was not subject to further contract settlement actions between the Government and the Contractor.

(4) *Computing penalty amount.* The Government will compute the interest penalty in accordance with the Office of Management and Budget prompt payment regulations at 5 CFR part 1315.

(i) For the sole purpose of computing an interest penalty that might be due the Contractor for payments described in paragraph (a)(1)(ii) of this clause, Government acceptance or approval is deemed to occur constructively on the 7th day after the Contractor has completed the work or services in accordance with the terms and conditions of the contract. If actual acceptance or approval occurs within the constructive acceptance or approval period, the Government will base the determination of an interest penalty on the actual date of acceptance or approval. Constructive acceptance or constructive approval requirements do not apply if there is a disagreement over quantity, quality, or Contractor compliance with a contract provision. These requirements also do not compel Government officials to accept work or services, approve Contractor estimates, perform contract administration functions, or make payment prior to fulfilling their responsibilities.

(ii) The prompt payment regulations at 5 CFR 1315.10(c) do not require the Government to pay interest penalties if payment delays are due to disagreement between the Government and the

Contractor over the payment amount or other issues involving contract compliance, or on amounts temporarily withheld or retained in accordance with the terms of the contract. The Government and the Contractor shall resolve claims involving disputes, and any interest that may be payable in accordance with the clause at FAR 52.233–1, Disputes.

(5) *Discounts for prompt payment.* The designated payment office will pay an interest penalty automatically, without request from the Contractor, if the Government takes a discount for prompt payment improperly. The Government will calculate the interest penalty in accordance with the prompt payment regulations at 5 CFR part 1315.

(6) *Additional interest penalty.* (i) The designated payment office will pay a penalty amount, calculated in accordance with the prompt payment regulations at 5 CFR part 1315 in addition to the interest penalty amount only if—

(A) The Government owes an interest penalty of $1 or more;

(B) The designated payment office does not pay the interest penalty within 10 days after the date the invoice amount is paid; and

(C) The Contractor makes a written demand to the designated payment office for additional penalty payment, in accordance with paragraph (a)(6)(ii) of this clause, postmarked not later than 40 days after the date the invoice amount is paid.

(ii)(A) The Contractor shall support written demands for additional penalty payments with the following data. The Government will not request any additional data. The Contractor shall—

(*1*) Specifically assert that late payment interest is due under a specific invoice, and request payment of all overdue late payment interest penalty and such additional penalty as may be required;

(*2*) Attach a copy of the invoice on which the unpaid late payment interest was due; and

(*3*) State that payment of the principal has been received, including the date of receipt.

(B) If there is no postmark or the postmark is illegible—

(1) The designated payment office that receives the demand will annotate it with the date of receipt provided the demand is received on or before the 40th day after payment was made; or

(*2*) If the designated payment office fails to make the required annotation, the Government will determine the demand's validity based on the date the Contractor has placed on the demand, provided such date is no later than the 40th day after payment was made.

(b) *Contract financing payments.* If this contract provides for contract financing, the Government will make contract financing payments in accordance with the applicable contract financing clause.

(c) *Subcontract clause requirements.* The Contractor shall include in each subcontract for property or services (including a material supplier) for the purpose of performing this contract the following:

(1) *Prompt payment for subcontractors.* A payment clause that obligates the Contractor to pay the subcontractor for satisfactory performance under its subcontract not later than 7 days from receipt of payment out of such amounts as are paid to the Contractor under this contract.

(2) *Interest for subcontractors.* An interest penalty clause that obligates the Contractor to pay to the subcontractor an interest penalty for each payment not made in accordance with the payment clause—

(i) For the period beginning on the day after the required payment date and ending on the date on which payment of the amount due is made; and

(ii) Computed at the rate of interest established by the Secretary of the Treasury, and published in the **Federal Register,** for interest payments under section 12 of the Contract Disputes Act of 1978 (41 U.S.C. 611) in effect at the time the Contractor accrues the obligation to pay an interest penalty.

(3) *Subcontractor clause flowdown.* A clause requiring each subcontractor to

(i) Include a payment clause and an interest penalty clause conforming to the standards set forth in paragraphs (c)(1) and (c)(2) of this clause in each of its subcontracts; and

(ii) Require each of its subcontractors to include such clauses in their subcontracts with each lower-tier subcontractor or supplier.

(d) *Subcontract clause interpretation.* The clauses required by paragraph (c) of this clause shall not be construed to impair the right of the Contractor or a subcontractor at any tier to negotiate, and to include in their

subcontract, provisions that—

(1) *Retainage permitted.* Permit the Contractor or a subcontractor to retain (without cause) a specified percentage of each progress payment otherwise due to a subcontractor for satisfactory performance under the subcontract without incurring any obligation to pay a late payment interest penalty, in accordance with terms and conditions agreed to by the parties to the subcontract, giving such recognition as the parties deem appropriate to the ability of a subcontractor to furnish a performance bond and a payment bond;

(2) *Withholding permitted.* Permit the Contractor or subcontractor to make a determination that part or all of the subcontractor's request for payment may be withheld in accordance with the subcontract agreement; and

(3) *Withholding requirements.* Permit such withholding without incurring any obligation to pay a late payment penalty if—

(i) A notice conforming to the standards of paragraph (g) of this clause previously has been furnished to the subcontractor; and

(ii) The Contractor furnishes to the Contracting Officer a copy of any notice issued by a Contractor pursuant to paragraph (d)(3)(i) of this clause.

(e) *Subcontractor withholding procedures.* If a Contractor, after making a request for payment to the Government but before making a payment to a subcontractor for the subcontractor's performance covered by the payment request, discovers that all or a portion of the payment otherwise due such subcontractor is subject to withholding from the subcontractor in accordance with the subcontract agreement, then the Contractor shall—

(1) *Subcontractor notice.* Furnish to the subcontractor a notice conforming to the standards of paragraph (g) of this clause as soon as practicable upon ascertaining the cause giving rise to a withholding, but prior to the due date for subcontractor payment;

(2) *Contracting Officer notice.* Furnish to the Contracting Officer, as soon as practicable, a copy of the notice furnished to the subcontractor pursuant to paragraph (e)(1) of this clause;

(3) *Subcontractor progress payment reduction.* Reduce the subcontractor's progress payment by an amount not to exceed the amount specified in the notice of withholding furnished under paragraph (e)(1) of this clause;

(4) *Subsequent subcontractor payment.* Pay the subcontractor as soon as practicable after the correction of the identified subcontract performance deficiency, and—

(i) Make such payment within—

(A) Seven days after correction of the identified subcontract performance deficiency (unless the funds therefor must be recovered from the Government because of a reduction under paragraph (e)(5)(i)) of this clause; or

(B) Seven days after the Contractor recovers such funds from the Government; or

(ii) Incur an obligation to pay a late payment interest penalty computed at the rate of interest established by the Secretary of the Treasury, and published in the **Federal Register**, for interest payments under section 12 of the Contracts Disputes Act of 1978 (41 U.S.C. 611) in effect at the time the Contractor accrues the obligation to pay an interest penalty;

(5) *Notice to Contracting Officer.* Notify the Contracting Officer upon—

(i) Reduction of the amount of any subsequent certified application for payment; or

(ii) Payment to the subcontractor of any withheld amounts of a progress payment, specifying—

(A) The amounts withheld under paragraph (e)(1) of this clause; and

(B) The dates that such withholding began and ended; and

(6) *Interest to Government.* Be obligated to pay to the Government an amount equal to interest on the withheld payments (computed in the manner provided in 31 U.S.C. 3903(c)(1)), from the 8th day after receipt of the withheld amounts from the Government until—

(i) The day the identified subcontractor performance deficiency is corrected; or

(ii) The date that any subsequent payment is reduced under paragraph (e)(5)(i) of this clause.

(f) *Third-party deficiency reports*—(1) *Withholding from subcontractor.* If a Contractor, after making payment to a first-tier subcontractor, receives from a supplier or subcontractor of the first-tier subcontractor (hereafter referred to as a ''second-tier subcontractor'') a written notice in accordance with section

2 of the Act of August 24, 1935 (40 U.S.C. 270b, Miller Act), asserting a deficiency in such first-tier subcontractor's performance under the contract for which the Contractor may be ultimately liable, and the Contractor determines that all or a portion of future payments otherwise due such first-tier subcontractor is subject to withholding in accordance with the subcontract agreement, the Contractor may, without incurring an obligation to pay an interest penalty under paragraph (e)(6) of this clause—

(i) Furnish to the first-tier subcontractor a notice conforming to the standards of paragraph (g) of this clause as soon as practicable upon making such determination; and

(ii) Withhold from the first-tier subcontractor's next available progress payment or payments an amount not to exceed the amount specified in the notice of withholding furnished under paragraph (f)(1)(i) of this clause.

(2) *Subsequent payment or interest charge.* As soon as practicable, but not later than 7 days after receipt of satisfactory written notification that the identified subcontract performance deficiency has been corrected, the Contractor shall—

(i) Pay the amount withheld under paragraph (f)(1)(ii) of this clause to such first-tier subcontractor; or

(ii) Incur an obligation to pay a late payment interest penalty to such first-tier subcontractor computed at the rate of interest established by the Secretary of the Treasury, and published in the **Federal Register**, for interest payments under section 12 of the Contracts Disputes Act of 1978 (41 U.S.C. 611) in effect at the time the Contractor accrues the obligation to pay an interest penalty.

(g) *Written notice of subcontractor withholding.* The Contractor shall issue a written notice of any withholding to a subcontractor (with a copy furnished to the Contracting Officer), specifying—

(1) The amount to be withheld;

(2) The specific causes for the withholding under the terms of the subcontract; and

(3) The remedial actions to be taken by the subcontractor in order to receive payment of the amounts withheld.

(h) *Subcontractor payment entitlement.* The Contractor may not request payment from the Government of any amount withheld or retained in accordance with paragraph (d) of this clause until such time as the Contractor has determined and certified to the Contracting Officer that the subcontractor is entitled to the payment of such amount.

(i) *Prime-subcontractor disputes.* A dispute between the Contractor and subcontractor relating to the amount or entitlement of a subcontractor to a payment or a late payment interest penalty under a clause included in the subcontract pursuant to paragraph (c) of this clause does not constitute a dispute to which the Government is a party. The Government may not be interpleaded in any judicial or administrative proceeding involving such a dispute.

(j) *Preservation of prime-subcontractor rights.* Except as provided in paragraph (i) of this clause, this clause shall not limit or impair any contractual, administrative, or judicial remedies otherwise available to the Contractor or a subcontractor in the event of a dispute involving late payment or nonpayment by the Contractor or deficient subcontract performance or nonperformance by a subcontractor.

(k) *Non-recourse for prime contractor interest penalty.* The Contractor's obligation to pay an interest penalty to a subcontractor pursuant to the clauses included in a subcontract under paragraph (c) of this clause shall not be construed to be an obligation of the Government for such interest penalty. A cost-reimbursement claim may not include any amount for reimbursement of such interest penalty.

(l) *Overpayments.* If the Contractor becomes aware of a duplicate payment or that the Government has otherwise overpaid on an invoice payment, the Contractor shall immediately notify the Contracting Officer and request instructions for disposition of the overpayment.

(End of clause)

82. *FAR 52.232-33 PAYMENT BY ELECTRONIC FUNDS TRANSFER –CENTRAL CONTRACTOR REGISTRATION (MAY 1999)

(a) *Method of payment*. (1) All payments by the Government under this contract shall be made by electronic funds transfer (EFT), except as provided in paragraph (a)(2) of this clause. As used in this clause, the term ''EFT'' refers to the funds transfer and may also include the payment information transfer.

(2) In the event the Government is unable to release one or more payments by EFT, the Contractor agrees

to either—

(i) Accept payment by check or some other mutually agreeable method of payment; or

(ii) Request the Government to extend the payment due date until such time as the Government can make payment by EFT (but see paragraph (d) of this clause).

(b) *Contractor's EFT information.* The Government shall make payment to the Contractor using the EFT information contained in the Central Contractor Registration (CCR) database. In the event that the EFT information changes, the Contractor shall be responsible for providing the updated information to the CCR database.

(c) *Mechanisms for EFT payment.* The Government may make payment by EFT through either the Automated Clearing House (ACH) network, subject to the rules of the National Automated Clearing House Association, or the Fedwire Transfer System. The rules governing Federal payments through the ACH are contained in 31 CFR part 210.

(d) *Suspension of payment.* If the Contractor's EFT information in the CCR database is incorrect, then the Government need not make payment to the Contractor under this contract until correct EFT information is entered into the CCR database; and any invoice or contract financing request shall be deemed not to be a proper invoice for the purpose of prompt payment under this contract. The prompt payment terms of the contract regarding notice of an improper invoice and delays in accrual of interest penalties apply.

(e) *Contractor EFT arrangements.* If the Contractor has identified multiple payment receiving points (i.e., more than one remittance address and/or EFT information set) in the CCR database, and the Contractor has not notified the Government of the payment receiving point applicable to this contract, the Government shall make payment to the first payment receiving point (EFT information set or remittance address as applicable) listed in the CCR database.

(f) *Liability for uncompleted or erroneous transfers*. (1) If an uncompleted or erroneous transfer occurs because the Government used
the Contractor's EFT information incorrectly, the Government remains responsible for—

(i) Making a correct payment;

(ii) Paying any prompt payment penalty due; and

(iii) Recovering any erroneously directed funds.

(2) If an uncompleted or erroneous transfer occurs because the Contractor's EFT information was incorrect, or was revised within 30 days of Government release of the EFT payment transaction instruction to the Federal Reserve System, and—

(i) If the funds are no longer under the control of the payment office, the Government is deemed to have made payment and the Contractor is responsible for recovery of any erroneously directed funds; or

(ii) If the funds remain under the control of the payment office, the Government shall not make payment, and the provisions of paragraph (d) of this clause shall apply.

(g) *EFT and prompt payment.* A payment shall be deemed to have been made in a timely manner in accordance with the prompt payment terms of this contract if, in the EFT payment transaction instruction released to the Federal Reserve System, the date specified for settlement of the payment is on or before the prompt payment due date, provided the specified payment date is a valid date under the rules of the Federal Reserve System.

(h) *EFT and assignment of claims.* If the Contractor assigns the proceeds of this contract as provided for in the assignment of claims terms of this contract, the Contractor shall require as a condition of any such assignment, that the assignee shall register in the CCR database and shall be paid by EFT in accordance with the terms of this clause. In all respects, the requirements of this clause shall apply to the assignee as if it were the Contractor. EFT information that shows the ultimate recipient of the transfer to be other than the Contractor, in the absence of a proper assignment of claims acceptable to the Government, is incorrect EFT information within the meaning of paragraph (d) of this clause.

(i) *Liability for change of EFT information by financial agent*. The Government is not liable for errors resulting from changes to EFT information made by the Contractor's financial agent.

(j) *Payment information.* The payment or disbursing office shall forward to the Contractor available payment information that is suitable for transmission as of the date of release of the EFT instruction to the Federal Reserve System. The Government may request the Contractor to designate a desired format and method(s) for delivery of payment information from a list of formats and methods the payment office is capable of executing. However, the Government does not guarantee that any particular format or method of delivery is available at any

particular payment office and retains the latitude to use the format and delivery method most convenient to the Government. If the Government makes payment by check in accordance with paragraph (a) of this clause, the Government shall mail the payment information to the remittance address contained in the CCR database.
(End of Clause)

83. DFARS 252.232-7004 DOD PROGRESS PAYMENT RATES (OCT 2001)

(a) If the contractor is a small business concern, the Progress Payments clause of this contract is modified to change each mention of the progress payment rate and liquidation rate (excepting paragraph (k), *Limitations on Undefinitized Contract Actions*) to 90 percent.

(b) If the contractor is a small disadvantaged business concern, the Progress Payments clause of this contract is modified to change each mention of the progress payment rate and liquidation rate (excepting paragraph (k), *Limitations on Undefinitized Contract Actions*) to 95 percent.
(End of clause)

84. DFARS 252.232-7005 REIMBURSEMENT OF SUBCONTRACTOR ADVANCE PAYMENTS--DOD PILOT MENTOR-PROTEGE PROGRAM (SEP 2001)

(a) The Government will reimburse the Contractor for any advance payments made by the Contractor, as a mentor firm, to a protege firm, pursuant to an approved mentor-protege agreement, provided-

(1) The Contractor's subcontract with the protege firm includes a provision substantially the same as FAR 52.232-12, Advance Payments;

(2) The Contractor has administered the advance payments in accordance with the policies of FAR Subpart 32.4; and

(3) The Contractor agrees that any financial loss resulting from the failure or inability of the protege firm to repay any unliquidated advance payments is the sole financial responsibility of the Contractor.

(b) For a fixed price type contract, advance payments made to a protege firm shall be paid and administered as if they were 100 percent progress payments. The Contractor shall include as a separate attachment with each Standard Form (SF) 1443, Contractor's Request for Progress Payment, a request for reimbursement of advance payments made to a protege firm. The attachment shall provide a separate calculation of lines 14a through 14e of SF 1443 for each protege, reflecting the status of advance payments made to that protege.

(c) For cost reimbursable contracts, reimbursement of advance payments shall be made via public voucher. The Contractor shall show the amounts of advance payments made to each protege on the public voucher, in the form and detail directed by the cognizant contracting officer or contract auditor.
(End of clause)

85. *FAR 52.233-1 DISPUTES (DEC 1998)

(a) This contract is subject to the Contract Disputes Act of 1978, as amended (41 U.S.C. 601-613).

(b) Except as provided in the Act, all disputes arising under or relating to this contract shall be resolved under this clause.

(c) 'Claim,' as used in this clause, means a written demand or written assertion by one of the contracting parties seeking, as a matter of right, the payment of money in a sum certain, the adjustment or interpretation of contract terms, or other relief arising under or relating to this contract. A claim arising under a contract, unlike a claim relating to that contract, is a claim that can be resolved under a contract clause that provides for the relief sought by the claimant. However, a written demand or written assertion by the Contractor seeking the payment of money exceeding $100,000 is not a claim under the Act until certified as required by subparagraph (d)(2) of this clause. A voucher, invoice, or other routine request for payment that is not in dispute when submitted is not a claim under the Act. The submission may be converted to a claim under the Act, by complying with the submission and

certification requirements of this clause, if it is disputed either as to liability or amount or is not acted upon in a reasonable time.

(d)(1) A claim by the Contractor shall be made in writing and, unless otherwise stated in this contract, submitted within 6 years after accrual of the claim to the Contracting Officer for a written decision. A claim by the Government against the Contractor shall be subject to a written decision by the Contracting Officer.

(2) (i) Contractors shall provide the certification specified in paragraph (d)(2)(iii) of this clause when submitting any claim exceeding $100,000.

(ii) The certification requirement does not apply to issues in controversy that have not been submitted as all or part of a claim.

(iii) The certification shall state as follows:

'I certify that the claim is made in good faith; that the supporting data are accurate and complete to the best of my knowledge and belief; that the amount requested accurately reflects the contract adjustment for which the Contractor believes the Government is liable; and that I am duly authorized to certify the claim on behalf of the Contractor.'

(3) The certification may be executed by any person duly authorized to bind the Contractor with respect to the claim.

(e) For Contractor claims of $100,000 or less, the Contracting Officer must, if requested in writing by the Contractor, render a decision within 60 days of the request. For Contractor -certified claims over $100,000, the Contracting Officer must, within 60 days, decide the claim or notify the Contractor of the date by which the decision will be made.

(f) The Contracting Officer's decision shall be final unless the Contractor appeals or files a suit as provided in the Act.

(g) If the claim by the Contractor is submitted to the Contracting Officer or a claim by the Government is presented to the Contractor, the parties, by mutual consent, may agree to use alternative dispute resolution (ADR). If the Contractor refuses an offer for ADR, the Contractor shall inform the Contracting Officer, in writing, of the Contractor's specific reasons for rejecting the offer.

(h) The Government shall pay interest on the amount found due and unpaid from (1) the date the Contracting Officer receives the claim (certified if required), or (2) the date that payment otherwise would be due, if that date is later, until the date of payment. With regard to claims having defective certifications, as defined in (FAR) 48 CFR 33.201, interest shall be paid from the date that the Contracting Officer initially receives the claim. Simple interest on claims shall be paid at the rate, fixed by the Secretary of the Treasury as provided in the Act, which is applicable to the period during which the Contracting Officer receives the claim and then at the rate applicable for each 6-month period as fixed by the Treasury Secretary during the pendency of the claim.

(i) The Contractor shall proceed diligently with performance of this contract, pending final resolution of any request for relief, claim, appeal, or action arising under the contract, and comply with any decision of the Contracting Officer.

86. *FAR 52.233-3 PROTEST AFTER AWARD (AUG 1996)

(a) Upon receipt of a notice of protest (as defined in FAR 33.101) or a determination that a protest is likely (see FAR 33.102(d)), the Contracting Officer may, by written order to the Contractor, direct the Contractor to stop performance of the work called for by this contract. The order shall be specifically identified as a stop-work order issued under this clause. Upon receipt of the order, the Contractor shall immediately comply with its terms and take all reasonable steps to minimize the incurrence of costs allocable to the work covered by the order during the period of work stoppage. Upon receipt of the final decision in the protest, the Contracting Officer shall either--

(1) Cancel the stop-work order; or

(2) Terminate the work covered by the order as provided in the Default, or the Termination for Convenience of the Government, clause of this contract.

(b) If a stop-work order issued under this clause is canceled either before or after a final decision in the protest, the Contractor shall resume work. The Contracting Officer shall make an equitable adjustment in the delivery schedule or contract price, or both, and the contract shall be modified, in writing, accordingly, if--

(1) The stop-work order results in an increase in the time required for, or in the Contractor's cost properly allocable to, the performance of any part of this contract; and

(2) The Contractor asserts its right to an adjustment within 30 days after the end of the period of work stoppage; provided, that if the Contracting Officer decides the facts justify the action, the Contracting Officer may receive and act upon a proposal at any time before final payment under this contract.

(c) If a stop-work order is not canceled and the work covered by the order is terminated for the convenience of the Government, the Contracting Officer shall allow reasonable costs resulting from the stop-work order in arriving at the termination settlement.

(d) If a stop-work order is not canceled and the work covered by the order is terminated for default, the Contracting Officer shall allow, by equitable adjustment or otherwise, reasonable costs resulting from the stop-work order.

(e) The Government's rights to terminate this contract at any time are not affected by action taken under this clause.

(f) If, as the result of the Contractor's intentional or negligent misstatement, misrepresentation, or miscertification, a protest related to this contract is sustained, and the Government pays costs, as provided in FAR 33.102(b)(2) or 33.104(h)(1), the Government may require the Contractor to reimburse the Government the amount of such costs. In addition to any other remedy available, and pursuant to the requirements of Subpart 32.6, the Government may collect this debt by offsetting the amount against any payment due the Contractor under any contract between the Contractor and the Government.

87. RESERVED

88. FAR 52.236-2 DIFFERING SITE CONDITIONS (APR 1984)

(a) The Contractor shall promptly, and before the conditions are disturbed, give a written notice to the Contracting Officer of

(1) subsurface or latent physical conditions at the site which differ materially from those indicated in this contract, or

(2) unknown physical conditions at the site, of an unusual nature, which differ materially from those ordinarily encountered and generally recognized as inhering in work of the character provided for in the contract.

(b) The Contracting Officer shall investigate the site conditions promptly after receiving the notice. If the conditions do materially so differ and cause an increase or decrease in the Contractor's cost of, or the time required for, performing any part of the work under this contract, whether or not changed as a result of the conditions, an equitable adjustment shall be made under this clause and the contract modified in writing accordingly.

(c) No request by the Contractor for an equitable adjustment to the contract under this clause shall be allowed, unless the Contractor has given the written notice required, provided, that the time prescribed in (a) above for giving written notice may be extended by the Contracting Officer.

(d) No request by the Contractor for an equitable adjustment to the contract for differing site conditions shall be allowed if made after final payment under this contract.

89. *FAR 52.236-3 SITE INVESTIGATION AND CONDITIONS AFFECTING THE WORK (APR 1984)

(a) The Contractor acknowledges that it has taken steps reasonably necessary to ascertain the nature and location of the work, and that it has investigated and satisfied itself as to the general and local conditions which can affect the work or its cost, including but not limited to

(1) conditions bearing upon transportation, disposal, handling, and storage of materials;

(2) the availability of labor, water, electric power, and roads;

(3) uncertainties of weather, river stages, tides, or similar physical conditions at the site;

(4) the conformation and conditions of the ground; and

(5) the character of equipment and facilities needed preliminary to and during work performance. The Contractor also acknowledges that it has satisfied itself as to the character, quality, and quantity of surface and subsurface materials or obstacles to be encountered insofar as this information is reasonably ascertainable from an inspection of the site, including all exploratory work done by the Government, as well as from the drawings and specifications made a part of this contract. Any failure of the Contractor to take the actions described and acknowledged in this paragraph will not relieve the Contractor from responsibility for estimating properly the difficulty and cost of successfully performing the work, or for proceeding to successfully perform the work without additional expense to the Government.

(b) The Government assumes no responsibility for any conclusions or interpretations made by the Contractor based on the information made available by the Government. Nor does the Government assume responsibility for any understanding reached or representation made concerning conditions which can affect the work by any of its officers or agents before the execution of this contract, unless that understanding or representation is expressly stated in this contract.

90. *FAR 52.236-5 MATERIAL AND WORKMANSHIP (APR 1984)

(a) All equipment, material, and articles incorporated into the work covered by this contract shall be new and of the most suitable grade for the purpose intended, unless otherwise specifically provided in this contract. References in the specifications to equipment, material, articles, or patented processes by trade name, make, or catalog number, shall be regarded as establishing a standard of quality and shall not be construed as limiting competition. The Contractor may, at its option, use any equipment, material, article, or process that, in the judgment of the Contracting Officer, is equal to that named in the specifications, unless otherwise specifically provided in this contract.

(b) The Contractor shall obtain the Contracting Officer's approval of the machinery and mechanical and other equipment to be incorporated into the work. When requesting approval, the Contractor shall furnish to the Contracting Officer the name of the manufacturer, the model number, and other information concerning the performance, capacity, nature, and rating of the machinery and mechanical and other equipment. When required by this contract or by the Contracting Officer, the Contractor shall also obtain the Contracting Officer's approval of the material or articles which the Contractor contemplates incorporating into the work. When requesting approval, the Contractor shall provide full information concerning the material or articles. When directed to do so, the Contractor shall submit samples for approval at the Contractor's expense, with all shipping charges prepaid. Machinery, equipment, material, and articles that do not have the required approval shall be installed or used at the risk of subsequent rejection.

(c) All work under this contract shall be performed in a skillful and workmanlike manner. The Contracting Officer may require, in writing, that the Contractor remove from the work any employee the Contracting Officer deems incompetent, careless, or otherwise objectionable.

91. *FAR 52.232-33 PAYMENT BY ELECTRONIC FUNDS TRANSFER –CENTRAL CONTRACTOR REGISTRATION (MAY 1999)

(a) *Method of payment*. (1) All payments by the Government under this contract shall be made by electronic funds transfer (EFT), except as provided in paragraph (a)(2) of this clause. As used in this clause, the term ‘‘EFT’’ refers to the funds transfer and may also include the payment information transfer.

(2) In the event the Government is unable to release one or more payments by EFT, the Contractor agrees to either—

(i) Accept payment by check or some other mutually agreeable method of payment; or

(ii) Request the Government to extend the payment due date until such time as the Government can make payment by EFT (but see paragraph (d) of this clause).

(b) *Contractor’s EFT information.* The Government shall make payment to the Contractor using the EFT information contained in the Central Contractor Registration (CCR) database. In the event that the EFT information changes, the Contractor shall be responsible for providing the updated information to the CCR database.

(c) *Mechanisms for EFT payment*. The Government may make payment by EFT through either the Automated Clearing House (ACH) network, subject to the rules of the National Automated Clearing House Association, or the Fedwire Transfer System. The rules governing Federal payments through the ACH are contained in 31 CFR part 210.

(d) *Suspension of payment.* If the Contractor's EFT information in the CCR database is incorrect, then the Government need not make payment to the Contractor under this contract until correct EFT information is entered into the CCR database; and any invoice or contract financing request shall be deemed not to be a proper invoice for the purpose of prompt payment under this contract. The prompt payment terms of the contract regarding notice of an improper invoice and delays in accrual of interest penalties apply.

(e) *Contractor EFT arrangements.* If the Contractor has identified multiple payment receiving points (i.e., more than one remittance address and/or EFT information set) in the CCR database, and the Contractor has not notified the Government of the payment receiving point applicable to this contract, the Government shall make payment to the first payment receiving point (EFT information set or remittance address as applicable) listed in the CCR database.

(f) *Liability for uncompleted or erroneous transfers*. (1) If an uncompleted or erroneous transfer occurs because the Government used
the Contractor's EFT information incorrectly, the Government remains responsible for—

(i) Making a correct payment;

(ii) Paying any prompt payment penalty due; and

(iii) Recovering any erroneously directed funds.

(2) If an uncompleted or erroneous transfer occurs because the Contractor's EFT information was incorrect, or was revised within 30 days of Government release of the EFT payment transaction instruction to the Federal Reserve System, and—

(i) If the funds are no longer under the control of the payment office, the Government is deemed to have made payment and the Contractor is responsible for recovery of any erroneously directed funds; or

(ii) If the funds remain under the control of the payment office, the Government shall not make payment, and the provisions of paragraph (d) of this clause shall apply.

(g) *EFT and prompt payment*. A payment shall be deemed to have been made in a timely manner in accordance with the prompt payment terms of this contract if, in the EFT payment transaction instruction released to the Federal Reserve System, the date specified for settlement of the payment is on or before the prompt payment due date, provided the specified payment date is a valid date under the rules of the Federal Reserve System.

(h) *EFT and assignment of claims.* If the Contractor assigns the proceeds of this contract as provided for in the assignment of claims terms of this contract, the Contractor shall require as a condition of any such assignment, that the assignee shall register in the CCR database and shall be paid by EFT in accordance with the terms of this clause. In all respects, the requirements of this clause shall apply to the assignee as if it were the Contractor. EFT information that shows the ultimate recipient of the transfer to be other than the Contractor, in the absence of a proper assignment of claims acceptable to the Government, is incorrect EFT information within the meaning of paragraph (d) of this clause.

(i) *Liability for change of EFT information by financial agent*. The Government is not liable for errors resulting from changes to EFT information made by the Contractor's financial agent.

(j) *Payment information.* The payment or disbursing office shall forward to the Contractor available payment information that is suitable for transmission as of the date of release of the EFT instruction to the Federal Reserve System. The Government may request the Contractor to designate a desired format and method(s) for delivery of payment information from a list of formats and methods the payment office is capable of executing. However, the Government does not guarantee that any particular format or method of delivery is available at any particular payment office and retains the latitude to use the format and delivery method most convenient to the Government. If the Government makes payment by check in accordance with paragraph (a) of this clause, the Government shall mail the payment information to the remittance address contained in the CCR database.
(End of Clause)

92. *FAR 52.236-6 SUPERINTENDENCE BY THE CONTRACTOR (APR 1984)

At all times during performance of this contract and until the work is completed and accepted, the Contractor shall directly superintend the work or assign and have on the work site a competent superintendent who is satisfactory to the Contracting Officer and has authority to act for the Contractor.

93. FAR 52.236-7 PERMITS AND RESPONSIBILITIES (NOV 1991)

The Contractor shall, without additional expense to the Government, be responsible for obtaining any necessary licenses and permits, and for complying with any Federal, State, and municipal laws, codes, and regulations applicable to the performance of the work. The Contractor shall also be responsible for all damages to persons or property that occur as a result of the Contractor's fault or negligence. The Contractor shall also be responsible for all materials delivered and work performed until completion and acceptance of the entire work, except for any completed unit of work which may have been accepted under the contract.

94. *FAR 52.236-8 OTHER CONTRACTS (APR 1984)

The Government may undertake or award other contracts for additional work at or near the site of the work under this contract. The Contractor shall fully cooperate with the other contractors and with Government employees and shall carefully adapt scheduling and performing the work under this contract to accommodate the additional work, heeding any direction that may be provided by the Contracting Officer. The Contractor shall not commit or permit any act that will interfere with the performance of work by any other contractor or by Government employees.

95. *FAR 52.236-9 PROTECTION OF EXISTING VEGETATION, STRUCTURES, EQUIPMENT, UTILITIES, AND IMPROVEMENTS (APR 1984)

(a) The Contractor shall preserve and protect all structures, equipment, and vegetation (such as trees, shrubs, and grass) on or adjacent to the work site, which are not to be removed and which do not unreasonably interfere with the work required under this contract. The Contractor shall only remove trees when specifically authorized to do so, and shall avoid damaging vegetation that will remain in place. If any limbs or branches of trees are broken during contract performance, or by the careless operation of equipment, or by workmen, the Contractor shall trim those limbs or branches with a clean cut and paint the cut with a tree-pruning compound as directed by the Contracting Officer.

(b) The Contractor shall protect from damage all existing i mprovements and utilities

(1) at or near the work site, and

(2) on adjacent property of a third party, the locations of which are made known to or should be known by the Contractor. The Contractor shall repair any damage to those facilities, including those that are the property of a third party, resulting from failure to comply with the requirements of this contract or failure to exercise reasonable care in performing the work. If the Contractor fails or refused to repair the damage promptly, the Contracting Officer may have the necessary work performed and charge the cost to the Contractor.

96. *FAR 52.236-10 OPERATIONS AND STORAGE AREAS (APR 1984)

(a) The Contractor shall confine all operations (including storage of materials) on Government premises to areas authorized or approved by the Contracting Officer. The Contractor shall hold and save the Government, its officers and agents, free and harmless from liability of any nature occasioned by the Contractor's performance.

(b) Temporary buildings (e.g., storage sheds, shops, offices) and utilities may be erected by the Contractor only with the approval of the Contracting Officer and shall be built with labor and materials furnished by the Contractor without expense to the Government. The temporary buildings and utilities shall remain the property of the Contractor and shall be removed by the Contractor at its expense upon completion of the work. With the written consent of the Contracting Officer, the buildings and utilities may be abandoned and need not be removed.

(c) The Contractor shall, under regulations prescribed by the Contracting Officer, use only established roadways, or use temporary roadways constructed by the Contractor when and as authorized by the Contracting Officer. When materials are transported in prosecuting the work, vehicles shall not be loaded beyond the loading capacity recommended by the manufacturer of the vehicle or prescribed by any Federal, State, or local law or regulation. When it is necessary to cross curbs or sidewalks, the Contractor shall protect them from damage. The Contractor shall repair or pay for the repair of any damaged curbs, sidewalks, or roads.

97. *FAR 52.236-11 USE AND POSSESSION PRIOR TO COMPLETION (APR 1984)

(a) The Government shall have the right to take possession of or use any completed or partially completed part of the work. Before taking possession of or using any work, the Contracting Officer shall furnish the Contractor a list of items of work remaining to be performed or corrected on those portions of the work that the Government intends to take possession of or use. However, failure of the Contracting Officer to list any item of work shall not relieve the Contractor of responsibility for complying with the terms of the contract. The Government's possession or use shall not be deemed an acceptance of any work under the contract.

(b) While the Government has such possession or use, the Contractor shall be relieved of the responsibility for the loss of or damage to the work resulting from the Government's possession or use, notwithstanding the terms of the clause in this contract entitled "Permits and Responsibilities." If prior possession or use by the Government delays the progress of the work or causes additional expense to the Contractor, an equitable adjustment shall be made in the contract price or the time of completion, and the contract shall be modified in writing accordingly.

98. *FAR 52.236-12 CLEANING UP (APR 1984)

The Contractor shall at all times keep the work area, including storage areas, free from accumulations of waste materials. Before completing the work, the Contractor shall remove from the work and premises any rubbish, tools, scaffolding, equipment, and materials that are not the property of the Government. Upon completing the work, the Contractor shall leave the work area in a clean, neat, and orderly condition satisfactory to the Contracting Officer.

99. *FAR 52.236-13 ACCIDENT PREVENTION-ALTERNATE I (NOV 1991)

(a) The Contractor shall provide and maintain work environments and procedures which will (1) safeguard the public and Government personnel, property, materials, supplies, and equipment exposed to Contractor operations and activities; (2) avoid interruptions of Government operations and delays in project completion dates; and (3) control costs in the performance of this contract.

(b) For these purposes on contracts for construction or dismantling, demolition, or removal of improvements, the Contractor shall--

(1) Provide appropriate safety barricades, signs, and signal lights;

(2) Comply with the standards issued by the Secretary of Labor at 29 CFR Part 1926 and 29 CFR Part 1910; and

(3) Ensure that any additional measures the Contracting Officer determines to be reasonably necessary for the purposes are taken.

(c) If this contract is for construction or dismantling, demolition or removal of improvements with any Department of Defense agency or component, the Contractor shall comply with all pertinent provisions of the latest

version of U.S. Army Corps of engineers Safety and Health Requirements Manual, EM 385-1-1, in effect on the date of the solicitation.

(d) Whenever the Contracting Officer becomes aware of any noncompliance with these requirements or any condition which poses a serious or imminent danger to the health or safety of the public or Government personnel, the Contracting Officer shall notify the Contractor orally, with written confirmation, and request immediate initiation of corrective action. This notice, when delivered to the Contractor or the Contractor's representative at the work site, shall be deemed sufficient notice of the noncompliance and that corrective action is required. After receiving the notice, the Contractor shall immediately take corrective action. If the Contractor fails or refuses to promptly take corrective action, the Contracting Officer may issue an order stopping all or part of the work until satisfactory corrective action has been taken. The Contractor shall not be entitled to any equitable adjustment of the contract price or extension of the performance schedule on any stop work order issued under this clause.

(e) The Contractor shall insert this clause, including this paragraph (e), with appropriate changes in the designation of the parties, in subcontractors.

(f) Before commencing the work, the Contractor shall--

(1) Submit a written proposed plan for implementing this clause. The plan shall include an analysis of the significant hazards to life, limb, and property inherent in contract work performance and a plan for controlling these hazards; and

(2) Meet with representatives of the Contracting Officer to discuss and develop a mutual understanding relative to administration of the overall safety program.

100.*FAR 52.236-14 AVAILABILITY AND USE OF UTILITY SERVICES (APR 1984)

(a) The Government shall make all reasonably required amounts of utilities available to the Contractor from existing outlets and supplies, as specified in the contract. Unless otherwise provided in the contract, the amount of each utility service consumed shall be charged to or paid for by the Contractor at prevailing rates charged to the Government or, where the utility is produced by the Government, at reasonable rates determined by the Contracting Officer. The Contractor shall carefully conserve any utilities furnished without charge.

(b) The Contractor, at its expense and in a workmanlike manner satisfactory to the Contracting Officer, shall install and maintain all necessary temporary connections and distribution lines, and all meters required to measure the amount of each utility used for the purpose of determining charges. Before final acceptance of the work by the Government, the Contractor shall remove all the temporary connections, distribution lines, meters, and associated paraphernalia.

101.FAR 52.236-15 SCHEDULES FOR CONSTRUCTION CONTRACTS (APR 1984)

(a) The Contractor shall, within five days after the work commences on the contract or another period of time determined by the Contracting Officer, prepare and submit to the Contracting Officer for approval three copies of a practicable schedule showing the order in which the Contractor proposes to perform the work, and the dates on which the Contractor contemplates starting and completing the several salient features of the work (including acquiring materials, plant, and equipment). The schedule shall be in the form of a progress chart of suitable scale to indicate appropriately the percentage of work scheduled for completion by any given date during the period. If the Contractor fails to submit a schedule within the time prescribed, the Contracting Officer may withhold approval of progress payments until the Contractor submits the required schedule.

(b) The Contractor shall enter the actual progress on the chart as directed by the Contracting Officer, and upon doing so shall immediately deliver three copies of the annotated schedule to the Contracting Officer. If, in the opinion of the Contracting Officer, the Contractor falls behind the approved schedule, the Contractor shall take steps necessary to improve its progress, including those that may be required by the Contracting Officer, without additional cost to the Government. In this circumstance, the Contracting Officer may require the Contractor to increase the number of shifts, overtime operations, days of work, and/or the amount of construction plant, and to

submit for approval any supplementary schedule or schedules in chart form as the Contracting Officer deems necessary to demonstrate how the approved rate of progress will be regained.

(c) Failure of the Contractor to comply with the requirements of the Contracting Officer under this clause shall be grounds for a determination by the Contracting Officer that the Contractor is not prosecuting the work with sufficient diligence to ensure completion within the time specified in the contract. Upon making this determination, the Contracting Officer may terminate the Contractor's right to proceed with the work, or any separable part of it, in accordance with the default terms of this contract.

102.*FAR 52.236-17 LAYOUT OF WORK (APR 1984)

The Contractor shall lay out its work from Government-established base lines and bench marks indicated on the drawings, and shall be responsible for all measurements in connection with the layout. The Contractor shall furnish, at its own expense, all stakes, templates, platforms, equipment, tools, materials, and labor required to lay out any part of the work. The Contractor shall be responsible for executing the work to the lines and grades that may be established or indicated by the Contracting Officer. The Contractor shall also be responsible for maintaining and preserving all stakes and other marks established by the Contracting Officer until authorized to remove them. If such marks are destroyed by the Contractor or through its negligence before their removal is authorized, the Contracting Officer may replace them and deduct the expense of the replacement from any amounts due or to become due to the Contractor.

103.FAR 52.236-21 SPECIFICATIONS AND DRAWINGS FOR CONSTRUCTION(FEB 1997)

(a) The Contractor shall keep on the work site a copy of the drawings and specifications and shall at all times give the Contracting Officer access thereto. Anything mentioned in the specifications and not shown on the drawings, or shown on the drawings and not mentioned in the specifications, shall be of like effect as if shown or mentioned in both. In case of difference between drawings and specifications, the specifications shall govern. In case of discrepancy in the figures, in the drawings, or in the specifications, the matter shall be promptly submitted to the Contracting Officer, who shall promptly make a determination in writing. Any adjustment by the Contractor without such a determination shall be at its own risk and expense. The Contracting Officer shall furnish from time to time such detailed drawings and other information as considered necessary, unless otherwise provided.

(b) Wherever in the specifications or upon the drawings the words "directed," "required," "ordered," "designated," "prescribed," or words of like import are used, it shall be understood that the "direction," "requirement," "order," "designation," or "prescription," of the Contracting Officer is intended and similarly the words "approved," "acceptable," "satisfactory," or words of like import shall mean "approved by," or "acceptable to," or "satisfactory to" the Contracting Officer, unless otherwise expressly stated.

(c) Where "as shown," "as indicated," "as detailed," or words of similar import are used, it shall be understood that the reference is made to the drawings accompanying this contract unless stated otherwise. The word "provided" as used herein shall be understood to mean "provide complete in place," that is "furnished and installed."

(d) Shop drawings means drawings, submitted to the Government by the Contractor, subcontractor, or any lower tier subcontractor pursuant to a construction contract, showing in detail

(1) the proposed fabrication and assembly of structural elements, and

(2) the installation (i.e., fit, and attachment details) of materials or equipment. It includes drawings, diagrams, layouts, schematics, descriptive literature, illustrations, schedules, performance and test data, and similar materials furnished by the Contractor to explain in detail specific portions of the work required by the contract. The Government may duplicate, use, and disclose in any manner and for any purpose shop drawings delivered under this contract.

(e) If this contract requires shop drawings, the Contractor shall coordinate all such drawings, and review them for accuracy, completeness, and compliance with contract requirements and shall indicate its approval thereon as evidence of such coordination and review. Shop drawings submitted to the Contracting Officer without evidence of the Contractor's approval may be returned for resubmission. The Contracting Officer will indicate an approval or disapproval of the shop drawings and if not approved as submitted shall indicate the Government's

reasons therefor. Any work done before such approval shall be at the Contractor's risk. Approval by the Contracting Officer shall not relieve the Contractor from responsibility for any errors or omissions in such drawings, nor from responsibility for complying with the requirements of this contract, except with respect to variations described and approved in accordance with (f) below.

(f) If shop drawings show variations from the contract requirements, the Contractor shall describe such variations in writing, separate from the drawings, at the time of submission. If the Contracting Officer approves any such variation, the Contracting Officer shall issue an appropriate contract modification, except that, if the variation is minor or does not involve a change in price or in time of performance, a modification need not be issued.

(g) The Contractor shall submit to the Contracting Officer for approval four copies (unless otherwise indicated) of all shop drawings as called for under the various headings of these specifications. Three sets (unless otherwise indicated) of all shop drawings, will be retained by the Contracting Officer and one set will be returned to the Contractor.

104. *FAR 52.236-26 PRECONSTRUCTION CONFERENCE (FEB 1995)

If the Contracting Officer decides to conduct a preconstruction conference, the successful offeror will be notified and will be required to attend. The Contracting Officer's notification will include specific details regarding the date, time, and location of the conference, any need for attendance by subcontractors, and information regarding the items to be discussed.

105. DFARS 252.236-7000 MODIFICATION OF PROPOSALS - PRICE BREAKDOWN (DEC 1991)

(a) The Contractor shall furnish a price breakdown, itemized as required and within the time specified by the Contracting Officer, with any proposal for a contract modification.

(b) The price breakdown--

(1) Must include sufficient detail to permit an analysis of profit, and of all costs for--

(i) Material;

(ii) Labor,

(iii) Equipment;

(iv) Subcontracts; and

(2) Most cover all work involved in the modification, whether the work was deleted, added, or changed.

(c) The Contractor shall provide similar price breakdowns to support any amounts claimed for subcontracts.

(d) The Contractor's proposal shall include a justification for any time extension proposed.

106. DFARS 252.236-7008 CONTRACT PRICES - BIDDING SCHEDULES (DEC 1991)

(a) The Government's payment for the items listed in the Bidding Schedule shall constitute full compensation to the Contractor for--

(1) Furnishing all plant, labor, equipment, appliances, and materials; and

(2) Performing all operations required to complete the work in conformity with the drawings and specifications.

(b) The Contractor shall include in the prices for the items listed in the Bidding Schedule all costs for work in the specifications, whether or not specifically listed in the Bidding Schedule.

107. *FAR 52.242-13 BANKRUPTCY (JUL 1995)

In the event the Contractor enters into proceedings relating to bankruptcy, whether voluntary or involuntary, the Contractor agrees to furnish, by certified mail or electronic commerce method authorized by the contract, written

notification of the bankruptcy to the Contracting Officer responsible for administering the contract. This notification shall be furnished within five days of the initiation of the proceedings relating to bankruptcy filing. This notification shall include the date on which the bankruptcy petition was filed, the identity of the court in which the bankruptcy petition was filed, and a listing of Government contract numbers and contracting offices for all Government contracts against which final payment has not been made. This obligation remains in effect until final payment under this contract.

108. *FAR 52.242-14 SUSPENSION OF WORK (APR 1984)

(a) The Contracting Officer may order the Contractor, in writing, to suspend, delay, or interrupt all or any part of the work of this contract for the period of time that the Contracting Officer determines appropriate for the convenience of the Government.

(b) If the performance of all or any part of the work is, for an unreasonable period of time, suspended, delayed, or interrupted (1) by an act of the Contracting Officer in the administration of this contract, or (2) by the Contracting Officer's failure to act within the time specified in this contract (or within a reasonable time if not specified), an adjustment shall be made for any increase in the cost of performance of this contract (excluding profit) necessarily caused by the unreasonable suspension, delay, or interruption, and the contract modified in writing accordingly. However, no adjustment shall be made under this clause for any suspension, delay, or interruption to the extent that performance would have been so suspended, delayed, or interrupted by any other cause, including the fault or negligence of the Contractor, or for which an equitable adjustment is provided for or excluded under any other term or condition of this contract.

(c) A claim under this clause shall not be allowed (1) for any costs incurred more than 20 days before the Contractor shall have notified the Contracting Officer in writing of the act or failure to act involved (but this requirement shall not apply as to a claim resulting from a suspension order), and (2) unless the claim, in an amount stated, is asserted in writing as soon as practicable after the termination of the suspension, delay, or interruption, but not later than the date of final payment under the contract.

109. FAR 52.243-4 CHANGES (AUG 1987)

(a) The Contracting Officer may, at any time, without notice to the sureties, if any, by written order designated or indicated to be a change order, make changes in the work within the general scope of the contract, including changes--

(1) In the specifications (including drawings and designs);
(2) In the method or manner of performance of the work;
(3) In the Government-furnished facilities, equipment, materials, services, or site; or
(4) Directing acceleration in the performance of the work.

(b) Any other written or oral order (which, as used in this paragraph (b), includes direction, instruction, interpretation, or determination) from the Contracting Officer that causes a change shall be treated as a change order under this clause; provided, that the Contractor gives the Contracting Officer written notice stating

(1) the date, circumstances, and source of the order and
(2) that the Contractor regards the order as a change order.

(c) Except as provided in this clause, no order, statement, or conduct of the Contra cting Officer shall be treated as a change under this clause or entitle the Contractor to an equitable adjustment.

(d) If any change under this clause causes an increase or decrease in the Contractor's cost of, or the time required for, the performance of any part of the work under this contract, whether or not changed by any such order, the Contracting Officer shall make an equitable adjustment and modify the contract in writing. However, except for an adjustment based on defective specifications, no adjustment for any change under paragraph (b) of this clause shall be made for any costs incurred more than 20 days before the Contractor gives written notice as required. In the case of defective specifications for which the Government is responsible, the equitable adjustment shall include any increased cost reasonably incurred by the Contractor in attempting to comply with the defective specifications.

(e) The Contractor must assert its right to an adjustment under this clause within 30 days after

(1) receipt of a written change order under paragraph (a) of this clause or

(2) the furnishing of a written notice under paragraph (b) of this clause, by submitting to the Contracting Officer a written statement describing the general nature and amount of the proposal, unless this period is extended by the Government. The statement of proposal for adjustment may be included in the notice under paragraph (b) above.

(f) No proposal by the Contractor for an equitable adjustment shall be allowed if asserted after final payment under this contract.

110. DFARS 252.243-7001 PRICING OF CONTRACT MODIFICATIONS (DEC 1991)

When costs are a factor in any price adjustment under this contract, the contract cost principles and procedures in FAR Part 31 and DFARS Part 231, in effect on the date of this contract, apply.

111. DFARS 252.243-7002 REQUESTS FOR EQUITABLE ADJUSTMENT (MAR 1998)

(a) The amount of any request for equitable adjustment to contract terms shall accurately reflect the contract adjustment for which the Contractor believes the Government is liable. The request shall include only costs for performing the change, and shall not include any costs that already have been reimbursed or that have been separately claimed. All indirect costs included in the request shall be properly allocable to the change in accordance with applicable acquisition regulations.

(b)In accordance with 10 U.S.C. 2410(a), any request for equitable adjustment to contract terms that exceeds the simplified acquisition threshold shall bear, at the time of submission, the following certificate executed by an individual authorized to certify the request on behalf of the Contractor:
I certify that the request is made in good faith, and that the supporting data are accurate and complete to the best of may knowledge and belief.

(Official's Name)

(Title)

(c) The certification in paragraph (b) of this clause requires full disclosure of all relevant facts, including--

(1) Cost or pricing data if required in accordance with subsection 15.403-4 of the Federal Acquisition Regulation; and

(2) Information other than cost or pricing data, in accordance with subsection 15.403-3 of the FAR, including actual cost data and data to support any estimated costs, even if cost or pricing data are not required.

(d) The certification requirement in paragraph (b) of this clause does not apply to----

(1) Requests for routine contract payments; for example, requests for payment for accepted supplies and services, routine vouchers under a cost-reimbursement type contract, or progress payment invoices; or

(2) Final adjustment under an incentive provision of the contract.

(End of clause)

112. *FAR 52.244-2 SUBCONTRACTS (AUG 1998)

(a) Definitions. As used in this clause--

"Approved purchasing system" means a Contractor's purchasing system that has been reviewed and approved in accordance with Part 44 of the Federal Acquistion Regulation (FAR).

"Consent of subcontract" means the Contracting Officer's written consent for the Contractor to enter into a particular subcontract.

"Subcontract," means any contract, as defined in FAR Subpart 2.1, entered into by a subcontractor to furnish supplies or sevices for performance of the the prime contract or a subcontract. It includes, but is not limited to purchase orders, and changes and modifications to purchase orders.

(b) This clause does not apply to subcontracts for special test equipment when the contract contains the clause at FAR 52.245-18, Special Test Equipment.

(c) When this clause is included in a fixed-price type contract, consent to subcontract is required only on unpriced contract actions (including unpriced modification or unpriced delivery orders), and only if required in accordance with paragraph (d) or (e) of this clause.

(d) If the Contractor does not have an approved purchasing system, consent to subcontract is required for any subcontract that--

(1) Is of the cost-reimbursement, time-and-materials, or labor-hour type; or

(2) Is fixed-price and exceeds--

(i) For a contract awarded by the Department of Defense, the Coast Guard, or the National Aeronautics and Space Administration, the greater of the simplified theshold or 5 percent of the total estimated cost of the contract; or

(ii) For a contract awarded by a civilian agency other that the Coast Guard and the National Aeronautics and Space Administration, either the the simplified theshold or 5 percent of the total estimated cost of the contract.

(e) If the Contractor has an approved purchasing system, the Contractor nevertheless shall obtain the Contracting Officer's written consent before placing the following subcontracts:

_____
_____
_____

(f)(1) The Contractor shall notify the Contracting Officer reasonably in advance of placing any subcontract or modification thereof for which consent is required under paragraph (c), (d), or (e) of this clause, including the following information:

(i) A description of the supplies or services to be subcontracted.

(ii) Identification of the type of subcontract to be used.

(iii) Identification of the proposed subcontractor.

(iv) The proposed subcontract price.

(v) The subcontractor's current, complete, and accurate cost or pricing data and Certificate of Current Cost or Pricing Data, if required by other contract provisions.

(vi) The subcontractor's Disclosure Statement or Certificate relating to Cost Accounting Standards when such data are required by other provisions of this contract.

(vii) A negotiation memorandum reflecting--

(A) The principal elements of the subcontract price negotiations;

(B) The most significant considerations controlling establishment of initial or revised prices;

(C) The reason cost or pricing data were or were not required;

(D) The extent, if any, to which the Contractor did not rely on the subcontractor's cost or pricing data in determining the price objective and in negotiating the final price;

(E) The extent to which it was recognized in the negotiation that the subcontractor's cost or pricing data were not accurate, complete, or current; the action taken by the Contractor and subcontractor; and the effect of any such defective data on the total price negotiated;

(F) The reasons for any significant difference between the Contractor's price objective and the price negotiated; and

(G) A complete explanation of the incentive fee or profit plan when incentives are used. The explanation shall identify each critical performance element, management decisions used to quantify each incentive element, reasons for the incentives, and a summary of all trade-off possibilities considered.

(2) The Contractor is not required to notify the Contracting Officer in advance of entering into any subcontract for which consent is not required under paragraph (c), (d), or (e) of this clause.

(g) Unless the consent or approval specifically provides otherwise, neither consent by the Contracting Officer to any subcontract nor approval of the Contractor's purchasing system shall constitute a determination--

(1) Of the acceptability of any subcontract terms or conditions;

(2) Of the acceptability of any cost under this contract; or

(3) To relieve the Contractor of any responsibility for performing this contract.

(h) No subcontract or modification thereof placed under this contract shall provide for payment on a cost-plus-a-percentage-of-cost basis, and any fee payable under cost-reimbursement subcontracts shall not exceed the fee limitations in FAR 15.404-4(c)(4)(i).

(i) The Contractor shall give the Contracting Officer immediate written notice of any action or suit filed and prompt notice of any claim made against the Contractor by any subcontractor or vendor that, in the opinion of the Contractor, may result in litigation related in any way to this contract, with respect to which the Contractor may be entitled to reimbursement by the Government.

(j) The Government reserves the right to review the Contractor's purchasing system as set forth in FAR Subpart 44.3.

(k) Paragraphs (d) and (f) of this clause do not apply to the following subcontracts, which ere evaluated during negotiations:

_____

_____

_____

(End of clause)

113. FAR 52.244-6 SUBCONTRACTS FOR COMMERCIAL ITEMS (MAY 2001)

(a) *Definitions.* As used in this clause—

"Commercial item" has the meaning contained in the clause at 52.202-1, Definitions.
"Subcontract" includes a transfer of commercial items between divisions, subsidiaries, or affiliates of the Contractor or subcontractor at any tier.

(b) To the maximum extent practicable, the Contractor shall incorporate, and require its subcontractors at all tiers to incorporate, commercial items or nondevelopmental items as components of items to be supplied under this contract.

(c)(1) The following clauses shall be flowed down to subcontracts for commercial items:

(i) 52.219-8, Utilization of Small Business Concerns (OCT 2000) (15 U.S.C. 637(d)(2) and (3)), in all subcontracts that offer further subcontracting opportunities. If the subcontract (except subcontracts to small business concerns) exceeds $500,000 ($1,000,000 for construction of any public facility), the subcontractor must include 52.219-8 in lower tier subcontracts that offer sub-contracting opportunities.

(ii) 52.222-26, Equal Opportunity (FEB 1999) (E.O. 11246).

(iii) 52.222-35, Affirmative Action for Disabled Veterans and Veterans of the Vietnam Era (APR 1998) (38 U.S.C. 4212(a)).

(iv) 52.222-36, Affirmative Action for Workers with Disabilities (JUN 1998) (29 U.S.C. 793).

(v) 52.247-64, Preference for Privately Owned U.S.-Flagged Commercial Vessels (JUN 2000) (46 U.S.C. Appx 1241) (flowdown not required for subcontracts awarded beginning May 1, 1996).

(2) While not required, the Contractor may flow down to subcontracts for commercial items a minimal number of additional clauses necessary to satisfy its contractual obligations.

(d) The Contractor shall include the terms of this clause, including this paragraph (d), in subcontracts awarded under this contract.

(End of clause)

114. *FAR 52.245-2 GOVERNMENT PROPERTY (FIXED-PRICE CONTRACTS) (DEC 1989) [For Government Property over $100,000]

(a) Government-furnished property.

(1) The Government shall deliver to the Contractor, for use in connection with and under the terms of this contract, the Government-furnished property described in the Schedule or specifications together with any related data and information that the Contractor may request and is reasonably required for the intended use of the property (hereinafter referred to as "Government-furnished property").

(2) The delivery or performance dates for this contract are based upon the expectation that Government-furnished property suitable for use (except for property furnished "as is") will be delivered to the Contractor at the times stated in the Schedule or, if not so stated, in sufficient time to enable the Contractor to meet the contract's delivery or performance dates.

(3) If Government-furnished property is received by the Contractor in a condition not suitable for the intended use, the Contractor shall, upon receipt of it, notify the Contracting Officer, detailing the facts, and, as directed by the Contracting Officer and at Government expense, either repair, modify, return, or otherwise dispose of the property. After completing the directed action and upon written request of the Contractor, the Contracting Officer shall make an equitable adjustment as provided in paragraph (h) of this clause.

(4) If Government-furnished property is not delivered to the Contractor by the required time, the Contracting Officer shall, upon the Contractor's timely written request, make a determination of the delay, if any, caused the Contractor and shall make an equitable adjustment in accordance with paragraph (h) of this clause.

(b) Changes in Government-furnished property.

(1) The Contracting Officer may, by written notice,

(i) decrease the Government-furnished property provided or to be provided under this contract, or

(ii) substitute other Government-furnished property for the property to be provided by the Government, or to be acquired by the Contractor for the Government, under this contract. The Contractor shall promptly take such action as the Contracting Officer may direct regarding the removal, shipment, or disposal of the property covered by such notice.

(2) Upon the Contractor's written request, the Contracting Officer shall make an equitable adjustment to the contract in accordance with paragraph (h) of this clause, if the Government has agreed in the Schedule to make the property available for performing this contract and there is any--

(i) Decrease or substitution in this property pursuant to subparagraph (b)(1) above; or

(ii) Withdrawal of authority to use this property, if provided under any other contract or lease.

(c) Title in Government property.

(1) The Government shall retain title to all Government-furnished property.

(2) All Government-furnished property and all property acquired by the Contractor, title to which vests in the Government under this paragraph (collectively referred to as "Government property"), are subject to the provisions of this clause. However, special tooling accountable to this contract is subject to the provisions of the Special Tooling clause and is not subject to the provisions of this clause. Title to Government property shall not be affected by its incorporation into or attachment to any property not owned by the Government, nor shall

government property become a fixture or lose its identity as personal property by being attached to any real property.

(3) Title to each item of facilities and special test equipment acquired by the Contractor for the Government under this contract shall pass to and vest in the Government when its use in performing this contract commences or when the Government has paid for it, whichever is earlier, whether or not title previously vested in the Government.

(4) If this contract contains a provision directing the Contractor to purchase material for which the Government will reimburse the Contractor as a direct item of cost under this contract--

(i) Title to material purchased from a vendor shall pass to and vest in the Government upon the vendor's delivery of such material; and

(ii) Title to all other material shall pass to and vest in the Government upon--

(A) Issuance of the material for use in contract performance;

(B) Commencement of processing of the material or its use in contract performance; or

(C) Reimbursement of the cost of the material by the Government, whichever occurs first.

(d) Use of Government property. The Government property shall be used only for performing this contract, unless otherwise provided in this contract or approved by the Contracting Officer.

(e) Property Administration.

(1) The Contractor shall be responsible and accountable for all Government property provided under this contract and shall comply with Federal Acquisition Regulation (FAR) Subpart 45.5, as in effect on the date of this contract.

(2) The Contractor shall establish and maintain a program for the use, maintenance, repair, protection, and preservation of Government property in accordance with sound industrial practice and the applicable provisions of Subpart 45.5 of the FAR.

(3) If damage occurs to Government property, the risk of which has been assumed by the Government under this contract, the Government shall replace the items or the Contractor shall make such repairs as the Government directs. However, if the Contractor cannot effect such repairs within the time required, the Contractor shall dispose of the property as directed by the Contracting Officer. When any property for which the Government is responsible is replaced or repaired, the Contracting Officer shall make an equitable adjustment in accordance with paragraph (h) of this clause.

(4) The Contractor represents that the contract price does not include any amount for repairs or replacement for which the Government is responsible. Repair or replacement of property for which the Contractor is responsible shall be accomplished by the Contractor at its own expense.

(f) Access. The Government and all its designees shall have access at all reasonable times to the premises in which any Government property is located for the purpose of inspecting the Government property.

(g) Risk of loss. Unless otherwise provided in this contract, the Contractor assumes the risk of, and shall be responsible for, any loss or destruction of, or damage to, Government property upon its delivery to the Contractor or upon passage of title to the Government under paragraph (c) of this clause. However, the Contractor is not responsible for reasonable wear and tear to Government property or for Government property properly consumed in performing this contract.

(h) Equitable adjustment. When this clause specifies an equitable adjustment, it shall be made to any affected contract provision in accordance with the procedures of the Changes clause. When appropriate, the Contracting Officer may initiate an equitable adjustment in favor of the Government. The right to an equitable adjustment shall be the Contractor's exclusive remedy. The Government shall not be liable to suit for breach of contract for--

(1) Any delay in delivery of Government-furnished property;

(2) Delivery of Government-furnished property in a condition not suitable for its intended use;

(3) A decrease in or substitution of Government-furnished property; or

(4) Failure to repair or replace Government property for which the Government is responsible.

(i) Final accounting and disposition of Government property. Upon completing this contract, or at such earlier dates as may be fixed by the Contracting Officer, the Contractor shall submit, in a form acceptable to the Contracting Officer, inventory schedules covering all items of Government property (including any resulting scrap) not consumed in performing this contract or delivered to the Government. The Contractor shall prepare for

shipment, deliver f.o.b. origin, or dispose of the Government property as may be directed or authorized by the Contracting Officer. The net proceeds of any such disposal shall be credited to the contract price or shall be paid to the Government as the Contracting Officer directs.

(j) Abandonment and restoration of Contractor's premises. Unless otherwise provided herein, the Government--

(1) May abandon any Government property in place, at which time all obligations of the Government regarding such abandoned property shall cease; and

(2) Has no obligation to restore or rehabilitate the Contractor's premises under any circumstances (e.g., abandonment, disposition upon completion of need, or upon contract completion). However, if the Government-furnished property (listed in the Schedule or specifications) is withdrawn or is unsuitable for the intended use, or if other Government property is substituted, then the equitable adjustment under paragraph (h) of this clause may properly include restoration or rehabilitation costs.

(k) Communications. All communications under this clause shall be in writing.

(l) Overseas contracts. If this contract is to be performed outside of the United States of America, its territories, or possessions, the words "Government" and "Government-furnished" (wherever they appear in this clause) shall be construed as "United States Government" and "United States Government-furnished," respectively.

115. *FAR 52.245-4 GOVERNMENT-FURNISHED PROPERTY (SHORT FORM) (APR 1984) [For Government Property $100,000 or Less]

(a) The Government shall delivery to the Contractor, at the time and locations stated in this contract, the Government-furnished property described in the Schedule or specifications. If that property, suitable for its intended use, is not delivered to the Contractor, the Contracting Officer shall equitably adjust affected provisions of this contract in accordance with the Changed clause when--

(1) The Contractor submits a timely written request for an equitable adjustment; and

(2) The facts warrant an equitable adjustment.

(b) Title to Government-furnished property shall remain in the Government. The Contractor shall use the Government-furnished property only in connection with this contract. The Contractor shall maintain adequate property control records in accordance with sound industrial practice and will make such records available for Government inspection at all reasonable times, unless the clause at Federal Acquisition Regulation 52.245-1, Property Records, is included in this contract.

(c) Upon delivery of Government-furnished property to the Contractor, the Contractor assumes the risk and responsibility for its loss or damage, except--

(1) For reasonable wear and tear;

(2) To the extent property is consumed in performing this contract; or

(3) As otherwise provided for by the provisions of this contract.

(d) Upon completing this contract, the Contractor shall follow the instructions of the Contracting Officer regarding the disposition of all Government-furnished property not consumed in performing this contract or previously delivered to the Government. The Contractor shall prepare for shipment, deliver f.o.b. origin, or dispose of the Government property, as may be directed or authorized by the Contracting Officer. The net proceeds of any such disposal shall be credited to the contract price or shall be paid to the Government as directed by the Contracting Officer.

(e) If this contract is to be performed outside the United States of America, its territories, or possessions, the words "Government" and "Government-furnished" (wherever they appear in this clause) shall be construed as "United States Government" and "United States Government-furnished," respectively.

116. *FAR 52.246-12 INSPECTION OF CONSTRUCTION (AUG 1996)

(a) Definition. "Work" includes, but is not limited to, materials, workmanship, and manufacture and fabrication of components.

(b) The Contractor shall maintain an ade quate inspection system and perform such inspections as will ensure that the work performed under the contract conforms to contract requirements. The Contractor shall maintain complete inspection records and make them available to the Government. All work shall be conducted under the general direction of the Contracting Officer and is subject to Government inspection and test at all places and at all reasonable times before acceptance to ensure strict compliance with the terms of the contract.

(c) Government inspections and tests are for the sole benefit of the Government and do not--

(1) Relieve the Contractor of responsibility for providing adequate quality control measures;

(2) Relieve the Contractor of responsibility for damage to or loss of the material before acceptance;

(3) Constitute or imply acceptance; or

(4) Affect the continuing rights of the Government after acceptance of the completed work under paragraph (i) below.

(d) The presence or absence of a Government inspector does not relieve the Contractor from any contract requirement, nor is the inspector authorized to change any term or condition of the specification without the Contracting Officer's written authorization.

(e) The Contractor shall promptly furnish, at no increase in contract pric e, all facilities,labor, and material reasonably needed for performing such safe and convenient inspections and tests as may be required by the Contracting Officer. The Government may charge to the Contractor any additional cost of inspection or test when work is not ready at the time specified by the Contractor for inspection or test, or when prior rejection makes reinspection or retest necessary. The Government shall perform all inspections and tests in a manner that will not unnecessarily delay the work. Special, full size, and performance tests shall be performed as described in the contract.

(f) The Contractor shall, without charge, replace or correct work found by the Government not to conform to contract requirements, unless in the public interest the Government consents to accept the work with an appropriate adjustment in contract price. The Contractor shall promptly segregate and remove rejected material from the premises.

(g) If the Contractor does not promptly replace or correct rejected work, the Government may

(1) by contract or otherwise, replace or correct the work and charge the cost to the Contractor or

(2) Terminate for default the Contractor's right to proceed.

(h) If, before acceptance of the entire work, the Government decides to examine already completed work by removing it or tearing it out, the Contractor, on request, shall promptly furnish all necessary facilities, labor, and material. If the work is found to be defective or nonconforming in any material respect due to the fault of the Contractor or its subcontractors, the Contractor shall defray the expenses of the examination and of satisfactory reconstruction. However, if the work is found to meet contract requirements, the Contracting Officer shall make an equitable adjustment for the additional services involved in the examination and reconstruction, including, if completion of the work was thereby delayed, an extension of time.

(i) Unless otherwise specified in the contract, the Government shall accept, as promptly as practic able after completion and inspection, all work required by the contract or that portion of the work the Contracting Officer determines can be accepted separately. Acceptance shall be final and conclusive except for latent defects, fraud, gross mistakes amounting to fraud, or the Government's rights under any warranty or guarantee.

117. *FAR 52.246-21 WARRANTY OF CONSTRUCTION (MAR 1994)

(a) In addition to any other warranties in this contract, the Contractor warrants, except as provided in paragraph (i) of this clause, that work performed under this contract conforms to the contract requirements and is free of any defect in equipment, material, or design furnished, or workmanship performed by the Contractor or any subcontractor or supplier at any tier.

(b) This warranty shall continue for a period of 1 year from the date of final acceptance of the work. If the Government takes possession of any part of the work before final acceptance, this warranty shall continue for a period of 1 year from the date the Government takes possession.

(c) The Contractor shall remedy at the Contractor's expense any failure to conform, or any defect. In addition, the Contractor shall remedy at the Contractor's expense any damage to Government -owned or controlled real or personal property, when that damage is the result of --

(1) The Contractor's failure to conform to contract requirements; or
(2) Any defect of equipment, material, workmanship, or design furnished.

(d) The Contractor shall restore any work damaged in fulfilling the terms and conditions of this clause. The Contractor's warranty with respect to work repaired or replaced will run for 1 year from the date of repair or replacement.

(e) The Contracting Officer shall notify the Contractor, in writing, within a reasonable time after the discovery of any failure, defect, or damage.

(f) If the Contractor fails to remedy any failure, defect, or damage within a reasonable time after receipt of notice, the Government shall have the right to replace, repair, or otherwise remedy the failure, defect, or damage at the Contractor's expense.

(g) With respect to all warranties, express or implied, from subcontractors, manufacturers, or suppliers for work performed and materials furnished under this contract, the Contractor shall --

(1) Obtain all warranties that would be given in normal commercial practice ;

(2) Require all warranties to be executed, in writing, for the benefit of the Government, if directed by the Contracting Officer; and

(3) Enforce all warranties for the benefit of the Government, if directed by the Contracting Officer.

(h) In the event the Contractor's warranty under paragraph (b) of this clause has expired, the Government may bring suit at its expense to enforce a subcontractor's, manufacturer's, or supplier's warranty.

(i) Unless a defect is caused by the negligence of the Contractor or subcontractor or supplier at any tier, the Contractor shall not be liable for the repair of any defects of material or design furnished by the Government nor for the repair of any damage that results from any defect in Government -furnished material or design.

(j) This warranty shall not limit the Government's rights under the Inspection and Acceptance clause of this contract with respect to latent defects, gross mistakes, or fraud.

118. DFARS 252.247-7023 TRANSPORTATION OF SUPPLIES BY SEA (MAR 2000)

(a) Definitions.
As used in this clause--
(1) "Components" means articles, materials, and supplies incorporated directly into end products at any level of manufacture, fabrication, or assembly by the Contractor or any subcontractor.
(2) 'Department of Defense" (DOD) means the Army, Navy, Air Force, Marine Corps, and defense agencies.
(3) "Foreign flag vessel" means any vessel that is not a U.S.-flag vessel.
(4) "Ocean transportation" means any transportation aboard a ship, vessel, boat, barge, or ferry through international waters.
(5) "Subcontractor" means a supplier, materialman, distributor, or vendor at any level below the prime Contractor whose contractual obligation to perform results from, or is conditioned upon, award of the prime contract and who is performing any part of the work or other requirement of the prime contract.

(6) "Supplies" means all property, except land and interests in lard, that is clearly identifiable for eventual use by or owned by the DoD at the time of transportation by sea.

(i) An item is clearly identifiable for eventual use by the DoD if, for example, the contract documentation contains a reference to a DoD contract number or a military destination.

(ii) "Supplies" includes (but is not limited to) public works; buildings and facilities; ships; floating equipment and vessels of every character, type, and description, with parts, subassemblies, accessories, and equipment; machine tools; material; equipment; stores of all kinds; end items; construction materials; and components of the foregoing.

(7) "U.S.-flag vessel" means a vessel of the United States or belonging to the United States, including any vessel registered or having national status under the laws of the United States.

(b) (1) The Contractor shall use U.S. -flag vessels when transporting any supplies by sea under this contract.

(2) A subcontractor transporting supplies by sea under this contract shall use U.S.-flag vessel if--

(i) This Contract is a construction contract; or

(ii) The supplies being transported are-

(A) Noncommercial items; or

(B) Commercial items that-

(1) The Contractor is reselling or distributing to the Government without adding value (generally, the Contractor does not add value to items that it subcontracts for f.o.b. destination shipment);

(2) Are shipped in direct support of U.S. military contingency operations, exercises, or forces deployed in humanitarian or peacekeeping operations; or

(3) Are commissary or exchange cargoes transported outside of the Defense Transportation System in accordance with 10 U.S.C. 2643.

(c) The Contractor and its subcontractors may request that the Contracting Officer authorize shipment in foreign-flag vessels, or designate available U.S.-flag vessels, if the Contractor or a subcontractor believes that--

(1) U.S.-flag vessels are not available for timely shipment;

(2) The freight charges are inordinately excessive or unreasonable; or

(3) Freight charges are higher that charges to private p ersons for transportation of like goods.

(d) The Contractor must submit any request for use of other than U.S.-flag vessels in writing to the Contracting Officer at least 45 days prior to the sailing date necessary to meet its delivery schedules. The Contracting Officer will process requests submitted after such date(s) as expeditiously as possible, but the Contracting Officer's failure to grant approvals to meet the shipper's sailing date will not of itself constitute a compensable delay under this or any other clause of this contract. Requests shall contain at a minimum--

(1) Type, weight, and cube of cargo;

(2) Required shipping date:

(3) Special handling and discharge requirements;

(4) Loading and discharge points;

(5) Name of shipper and consignee;

(6) Prime contract number, and

(7) A documented description of efforts made to secure U.S.-flag vessels, including points of contact (with names and telephone numbers) with at least two U.S.-flag carriers contacted. Copies of telephone notes, telegraphic and facsimile message or letters will be sufficient for this purpose.

(e) The Contractor shall, within 30 days after each shipment covered by this clause, provide the Contracting Officer and the Division of National Cargo, Office of Market Development, Maritime Administration, U.S. Department of Transportation, Washington, DC 20590, one copy of the rated on board vessel operating carrier's ocean bill of lading, which shall contain the following information--

(1) Prime contract number;

(2) Name of vessel;

(3) Vessel flag of registry;

(4) Date of loading;

(5) Port of loading;

(6) Port of final discharge;

(7) Description of commodity;
(8) Gross weight in pounds and cubic feet if available;
(9) Total ocean freight in U.S. dollars; and
(10) Name of the steamship company.

(f) The Contractor agrees to provide with its final invoice under this contract a representation that to the best of its knowledge and belief--

(1) No ocean transportation was used in the performance of this contract;

(2) Ocean transportation was used and only U.S.-flag vessels were used for all ocean shipments under the contract;

(3) Ocean transportation was used, and the Contractor had the written consent of the Contracting Officer for all non-U.S.-flag ocean transportation; or

(4) Ocean transportation was used and some or all of the shipments were made on non-U.S.-flag vessels without the written consent of the Contracting Officer. The Contractor shall describe these shipments in the following format;

ITEM DESCRIPTION	CONTRACT LINE ITEMS	QUANTITY
TOTAL		

(g) If the final invoice does not include the required representation, the Government will reject and return it to the Contractor as an improper invoice for the purposes of the Prompt Payment clause of this contract. In the event there has been unauthorized use of non-U.S.-flag vessels in the performance of this contract, the Contracting Officer is entitled to equitably adjust the contract, based on the unauthorized use.

(h) The Contractor shall include this clause, including this para graph (h) in all subcontracts under this contract that-

(1) Exceed the simplified acquistion threshold in Part 2 of the Federal Acquisition Regulation; and
(2) Are for a type of supplies described in paragraph (b) (2) of this clause.

119. DFARS 252.247-7024 NOTIFICATION OF TRANSPORTATION OF SUPPLIES BY SEA (MAR 2000)

(a) The Contractor has indicated by the response to the solicitation provision, Representation of Extent of Transportation by Sea, that it did not anticipate transporting by sea any supplies. If, however, after the award of this contract, the Contractor learns that supplies, as defined in the Transportation of Supplies by Sea clause of this contract, will be transported by sea, the Contractor--

(1) Shall notify the Contracting Officer of that fact; and

(2) Hereby agrees to comply with all the terms and conditions of the Transportation of Supplies by Sea clause of this contract.

(b) (1) The Contractor shall use U.S. -flag vessels when transporting any supplies by sea under this contract.

(2) A subcontractor transporting supplies by sea under this contract shall use U.S.-flag vessel if--

(i) This Contract is a construction contract; or
(ii) The supplies being transported are-
(A) Noncommercial items; or
(B) Commercial items that-
(1) The Contractor is reselling or distributing to the Government without adding value (generally, the Contractor does not add value to items that it subcontracts for f.o.b. destination shipment);
(2) Are shipped in direct support of U.S. military contingency operations, exercises, or forces deployed in humanitarian or peacekeeping operations; or

(3) Are commissary or exchange cargoes transported outside of the Defense Transportation System in accordance with 10 U.S.C. 2643.

120. FAR 52.248-3 VALUE ENGINEERING--CONSTRUCTION (FEB 2000) (ALERNATEI (APR 1984)

(a) General. The Contractor is encouraged to develop, prepare, and submit value engineering change proposals (VECP's) voluntarily. The Contractor shall share in any instant contract savings realized from accepted VECP's, in accordance with paragraph (f) of this clause.

(b) Definitions. "Collateral costs," as used in this clause, means agency costs of operation, maintenance, logistic support, or Government-furnished property.

"Collateral savings," as used in this clause, means those measurable net reductions resulting from a VECP in the agency's overall projected collateral costs, exclusive of acquisition savings, whether or not the acquisition cost changes.

"Contractor's development and implementation costs," as used in this clause, means those costs the Contractor incurs on a VECP specifically in developing, testing, preparing, and submitting the VECP, as well as those costs the Contractor incurs to make the contractual changes required by Government acceptance of a VECP.

"Government costs," as used in this clause, means those agency costs that result directly from developing and implementing the VECP, such as any net increases in the cost of testing, operations, maintenance, and logistic support. The term does not include the normal administrative costs of processing the VECP.

"Instant contract savings," as used in this clause, means the estimated reduction in Contractor cost of performance resulting from acceptance of the VECP, minus allowable Contractor's development and implementation costs, including subcontractors' development and implementation costs (see paragraph (h) of this clause).

"Value engineering change proposal (VECP)" means a proposal that--

(1) Requires a change to this, the instant contract, to implement; and

(2) Results in reducing the contract price or estimated cost without impairing essential functions or characteristics; provided, that it does not involve a change--

(i) In deliverable end item quantities only; or

(ii) To the contract type only.

(c) VECP preparation. As a minimum, the Contractor shall include in each VECP the information described in paragraphs (c) (1) through (7) of this clause. If the proposed change is affected by contractually required configuration management or similar procedures, the instructions in those procedures relating to format, identification, and priority assignment shall govern VECP preparation. The VECP shall include the following:

(1) A description of the difference between the existing contract requirement and that proposed, the comparative advantages and disadvantages of each, a justification when an item's function or characteristics are being altered, and the effect of the change on the end item's performance.

(2) A list and analysis of the contract requirements that must be changed if the VECP is accepted, including any suggested specification revisions.

(3) A separate, detailed cost estimate for

(i) the affected portions of the existing contract requirement and

(ii) the VECP. The cost reduction associated with the VECP shall take into account the Contractor's allowable development and implementation costs, including any amount attributable to subcontracts under paragraph (h) of this clause.

(4) A description and estimate of costs the Government may incur in implementing the VECP, such as test and evaluation and operating and support costs.

(5) A prediction of any effects the proposed change would have on collateral costs to the agency.

(6) A statement of the time by which a contract modification accepting the VECP must be issued in order to achieve the maximum cost reduction, noting any effect on the contract completion time or delivery schedule.

(7) Identification of any previous submissions of the VECP, including the dates submitted, the agencies and contract numbers involved, and previous Government actions, if known.

(d) Submission. The Contractor shall submit VECP's to the Resident Engineer at the worksite, with a copy to the Contracting Officer.

(e) Government action.

(1) The Contracting Officer will notify the Contractor of the status of the VECP within 45 calendar days after the contracting office receives it. If additional time is required, the Contracting Officer will notify the Contractor within the 45-day period and provide the reason for the delay and the expected date of the decision. The Government will process VECP's expeditiously; however, it will not be liable for any delay in acting upon a VECP.

(2) If the VECP is not accepted, the Contracting Officer will notify the Contractor in writing, explaining the reasons for rejection. The Contractor may withdraw any VECP, in whole or in part, at any time before it is accepted by the Government. The Contracting Officer may require that the Contractor provide written notification before undertaking significant expenditures for VECP effort.

(3) Any VECP may be accepted, in whole or in part, by the Contracting Officer's award of a modification to this contract citing this clause. The Contracting Officer may accept the VECP, even though an agreement on price reduction has not been reached, by issuing the Contractor a notice to proceed with the change. Until a notice to proceed is issued or a contract modification applied a VECP to this contract, the Contractor shall perform in accordance with the existing contract. The decision to accept or reject all or part of any VECP is a unilateral decision made solely at the discretion of the Contracting Officer.

(f) Sharing.

(1) Rates. The Government's share of savings is determined by subtracting Government costs from instant contract savings and multiplying the result by

(i) 45 percent for fixed-price contracts or

(ii) 75 percent for cost-reimbursement contracts.

(2) Payment. Payment of any share due the Contractor for use of a VECP on this contract shall be authorized by a modification to this contract to--

(i) Accept the VECP;

(ii) Reduce the contract price or estimated cost by the amount of instant contract savings; and

(iii) Provide the Contractor's share of savings by adding the amount calculated to the contract price or fee.

(g) Deleted.

(h) Subcontracts. The Contractor shall include an appropriate value engineering clause in any subcontract of $50,000 or more and may include one in subcontracts of lesser value. In computing any adjustment in this contract's price under paragraph (f) of this clause, the Contractor's allowable development and implementation costs clearly resulting from a VECP accepted by the Government under this contract, but shall exclude any value engineering incentive payments to a subcontractor. The Contractor may choose any arrangement for subcontractor value engineering incentive payments; provided, that these payments shall not reduce the Government's share of the savings resulting from the VECP.

(i) Data. The Contractor may restrict the Government's right to use any part of a VECP or the supporting data by marking the following legend on the affected parts:

"These data, furnished under the Value Engineering--Construction clause of contract - _____, shall not be disclosed outside the Government or duplicated, used, or disclosed, in whole or in part, for any purpose other than to evaluate a value engineering change proposal submitted under the clause. This restriction does not limit the Government's right to use information contained in these data if it has been obtained or is otherwise available from the Contractor or from another source without limitations."

If a VECP is accepted, the Contractor hereby grants the Government unlimited rights in the VECP and supporting data, except that, with respect to data qualifying and submitted as limited rights technical data, the Government shall have the rights specified in the contract modification implementing the VECP and shall appropriately mark the data. (The terms "unlimited rights" and "limited rights" are defined in Part 27 of the Federal Acquisition Regulation.)

(End of Clause)

121. *FAR 52.249-1 TERMINATION FOR CONVENIENCE OF THE GOVERNMENT (FIXED-PRICE) (SHORT FORM) (APR 1984) [For Contracts $100,000 or Less]

The Contracting Officer, by written notice, may terminate this contract, in whole or in part, when it is in the Government's interest. If this contract is terminated, the rights, duties, and obligations of the parties, including compensation to the Contractor, shall be in accordance with Part 49 of the Federal Acquisition Regulation in effect on the date of this contract.

122. *FAR 52.249-2 TERMINATION FOR CONVENIENCE OF THE GOVERNMENT (FIXED-PRICE) ALTERNATE I (SEP 1996) [For Contracts Over $100,000]

(a) The Government may terminate performance of work under this contract in whole or, from time to time, in part if the Contracting Officer determines that a termination is in the Government's interest. The Contracting Officer shall terminate by delivering to the Contractor a Notice of Termination specifying the extent of termination and the effective date.

(b) After receipt of a Notice of Termination, and except as directed by the Contracting Officer, the Contractor shall immediately proceed with the following obligations, regardless of any delay in determining or adjusting any amounts due under this clause:

(1) Stop work as specified in the notice.

(2) Place no further subcontracts or orders (referred to as subcontracts in this clause) for materials, services, or facilities, except as necessary to complete the continued portion of the contract.

(3) Terminate all subcontracts to the extent they relate to the work terminated.

(4) Assign to the Government, as directed by the Contracting Officer, all right, title, and interest of the Contractor under the subcontracts terminated, in which case the Government shall have the right to settle or to pay any termination settlement proposal arising out of those terminations.

(5) With approval or ratification to the extent required by the Contracting Officer, settle all outstanding liabilities and termination settlement proposals arising from the termination of subcontracts; the approval or ratification will be final for purposes of this clause.

(6) As directed by the Contracting Officer, transfer title and deliver to the Government

(i) the fabricated or unfabricated parts, work in process, completed work, supplies, and other material produced or acquired for the work terminated, and

(ii) the completed or partially completed plans, drawings, information, and other property that, if the contract had been completed, would be required to be furnished to the Government.

(7) Complete performance of the work not terminated.

(8) Take any action that may be necessary, or that the Contracting Officer may direct, for the protection and preservation of the property related to this contract that is in the possession of the Contractor and in which the Government has or may acquire an interest.

(9) Use its best efforts to sell, as directed or authorized by the Contracting Officer, any property of the types referred to in subparagraph (b) (6) of this clause; provided, however, that the Contractor

(i) is not required to extend credit to any purchaser and

(ii) may acquire the property under the conditions prescribed by, and at prices approved by, the Contracting Officer. The proceeds of any transfer or disposition will be applied to reduce any payments to be made by the Government under this contract, credited to the price or cost of the work, or paid in any other manner directed by the Contracting Officer.

(c) The Contractor shall submit complete termination inventory schedules no later than 120 days from the effective date of termination, unless extended in writing by the Contracting Officer upon written request of the Contractor within this 120-day period.

(d) After expiration of the plant clearance period as defined in Subpart 45.6 of the Federal Acquisition Regulation, the Contractor may submit to the Contracting Officer a list, certified as to quantity and quality, of termination inventory not previously disposed of, excluding items authorized for disposition by the Contracting Officer. The Contractor may request the Government to remove those items or enter into an agreement for their storage. Within 15 days, the Government will accept title to those items and remove them or enter into a storage agreement. The Contracting Officer may verify the list upon removal of the items, or if stored, within 45 days from submission of the list, and shall correct the list, as necessary, before final settlement.

(e) After termination, the Contractor shall submit a final termination settlement proposal to the Contracting Officer in the form and with the certification prescribed by the Contracting Officer. The Contractor shall submit the proposal promptly, but no later than 1 year from the effective date of termination, unless extended in writing by the Contracting Officer upon written request of the Contractor within this 1 year period. However, if the Contracting Officer determines that the facts justify it, a termination settlement proposal may be received and acted on after 1 year or any extension. If the Contractor fails to submit the proposal within the time allowed, the Contracting Officer may determine, on the basis of information available, the amount, if any, due the Contractor because of the termination and shall pay the amount determined.

(f) Subject to paragraph (e) of this clause, the Contractor and the Contracting Officer may agree upon the whole or any part of the amount to be paid because of the termination. The amount may include a reasonable allowance for profit on work done. However, the agreed amount, whether under this paragraph (f) or paragraph (g) of this clause, exclusive of costs shown in subparagraph (g)(3) of this clause, may not exceed the total contract price as reduced by (1) the amount of payments previously made and (2) the contract price of work not terminated. The contract shall be amended, and the Contractor paid the agreed amount. Paragraph (f) of this clause shall not limit, restrict, or affect the amount that may be agreed upon to be paid under this paragraph.

(g) If the Contractor and the Contracting Officer fail to agree on the whole amount to be paid the Contractor because of the termination of work, the Contracting Officer shall pay the Contractor the amounts determined as follows, but without duplication of any amounts agreed upon under paragraph (f) of this clause:

(1) For contract work performed before the effectivedate of the termination, the total (without duplication of any items) of--

(i) The cost of this work;

(ii) The cost of settling and paying termination settlement proposals under terminated subcontracts that are properly chargeable to the terminated portion of the contract if not included in subdivision (g)(1)(i) of this clause; and

(iii) A sum, as profit on subdivision (g)(1)(i) of this clause, determined by the Contracting Officer under 49.202 of the Federal Acquisition Regulation, in effect on the date of this contract, to be fair and reasonable; however, if it appears that the Contractor would have sustained a loss on the entire contract had it been completed, the Contracting Officer shall allow no profit under this subdivision (iii) and shall reduce the settlement to reflect the indicated rate of loss.

(2) The reasonable costs of settlement of the work terminated, including--

(i) Accounting, legal, clerical, and other expenses reasonably necessary for the preparation of termination settlement proposals and supporting data;

(ii) The termination and settlement of subcontracts (excluding the amounts of such settlements); and

(iii) Storage, transportation, and other costs incurred, reasonably necessary for the preservation, protection, or disposition of the termination inventory.

(h) Except for normal spoilage, and except to the extent that the Government expressly assumed the risk of loss, the Contracting Officer shall exclude from the amounts payable to the Contractor under paragraph (g) of this clause, the fair value, as determined by the Contracting Officer, of property that is destroyed, lost, stolen, or damaged so as to become undeliverable to the Government or to a buyer.

(i) The cost principles and procedures of Part 31 of the Federal Acquisition Regulation, in effect on the date of this contract, shall govern all costs claimed, agreed to, or determined under this clause.

(j) The Contractor shall have the right of appeal, under the Disputes clause, from any determination made by the Contracting Officer under paragraph (e), (g), or (l) of this clause, except that if the Contractor failed to submit the termination settlement proposal within the time provided in paragraph (e) or (l), respectively, and failed to request a time extension, there is no right of appeal.

(k) In arriving at the amount due the Contractor under this clause, there shall be deducted--

(1) All unliquidated advance or other payments to the Contractor under the terminated portion of this contract;

(2) Any claim which the Government has against the Contractor under this contract; and

(3) The agreed price for, or the proceeds of sale of, materials, supplies, or other things acquired by the Contractor or sold under the provisions of this clause and not recovered by or credited to the Government.

(l) If the termination is partial, the Contractor may file a proposal with the Contracting Officer for an equitable adjustment of the price(s) of the continued portion of the contract. The Contracting Officer shall make any equitable adjustment agreed upon. Any proposal by the Contractor for an equitable adjustment under this clause shall be requested within 90 days from the effective date of termination unless extended in writing by the Contracting Officer.

(m) (1) The Government may, under the terms and conditions it prescribes, make partial payments and payments against costs incurred by the Contractor for the terminated portion of the contract, if the Contracting Officer believes the total of these payments will not exceed the amount to which the Contractor will be entitled.

(2) If the total payments exceed the amount finally determined to be due, the Contractor shall repay the excess to the Government upon demand, together with interest computed at the rate established by the Secretary of the Treasury under 50 U.S.C. App. 1215(b)(2). Interest shall be computed for the period from the date the excess payment is received by the Contractor to the date the excess is repaid. Interest shall not be charged on any excess payment due to a reduction in the Contractor's termination settlement proposal because of retention or other disposition of termination inventory until 10 days after the date of the retention or disposition, or a later date determined by the Contracting Officer because of the circumstances.

(n) Unless otherwise provided in this contract or by statute, the Contractor shall maintain all records and documents relating to the terminated portion of this contract for 3 years after final settlement. This includes all books and other evidence bearing on the Contractor's costs and expenses under this contract. The Contractor shall make these records and documents available to the Government, at the Contractor's office, at all reasonable times, without any direct charge. If approved by the Contracting Officer, photographs, microphotographs, or other authentic reproductions may be maintained instead of original records and documents.

123. *FAR 52.249-10 DEFAULT (FIXED-PRICE CONSTRUCTION) (APR 1984)

(a) If the Contractor refuses or fails to prosecute the work or any separable part, with the diligence that will insure its completion within the time specified in this contract including any extension, or fails to complete the work within this time, the Government may, by written notice to the Contractor, terminate the right to proceed with the work (or the separable part of the work) that has been delayed. In this event, the Government may take over the work and complete it by contract or otherwise, and may take possession of and use any materials, appliances, and plant on the work site necessary for completing the work. The Contractor and its sureties shall be liable for any damage to the Government resulting from the Contractor's refusal or failure to complete the work within the specified time, whether or not the Contractor's right to proceed with the work is terminated. This liability includes any increased costs incurred by the Government in completing the work.

(b) The Contractor's right to proceed shall not be terminated nor the Contractor charged with damages under this clause, if-

(1) The delay in completing the work arises from unforeseeable causes beyond the control and without the fault or negligence of the Contractor. Examples of such causes include

(i) acts of God or of the public enemy,

(ii) acts of the Government in either its sovereign or contractual capacity,

(iii) acts of another Contractor in the performance of a contract with the Government,

(iv) fires,

(v) floods,

(vi) epidemics,

(vii) quarantine restrictions,

(viii) strikes,

(ix) freight embargoes,

(x) unusually severe weather, or

(xi) delays of subcontractors or suppliers at any tier arising from unforeseeable causes beyond the control and without the fault or negligence of both the Contractor and the subcontractors or suppliers; and

(2) The Contractor, within 10 days from the beginning of any delay (unless extended by the Contracting Officer), notifies the Contracting Officer in writing of the causes of delay. The Contracting Officer

shall ascertain the facts and the extent of delay. If, in the judgment of the Contracting Officer, the findings of fact warrant such action, the time for completing the work shall be extended. The findings of the Contracting Officer shall be final and conclusive on the parties, but subject to appeal under the Disputes clause.

(c) If, after termination of the Contractor's right to proceed, it is determined that the Contractor was not in default, or that the delay was excusable, the rights and obligation s of the parties will be the same as if the termination had been issued for the convenience of the Government.

(d) The rights and remedies of the Government in this clause are in addition to any other rights and remedies provided by law or under this contract.

124. ENVIRONMENTAL LITIGATION (1974 NOV OCE)

(a) If the performance of all or any part of the work is suspended, delayed, or interrupted due to an order of a court of competent jurisdiction as a result of environmental litigation, as defined below, the Contracting Officer, at the request of the Contractor, shall determine whether the order is due in any part to the acts or omissions of the Contractor or a Subcontractor at any tier not required by the terms of this contract. If it is determined that the order is not due in any part to acts or omissions of the Contractor or a Subcontractor at any tier other than as required by the terms of this contract, such suspension, delay, or interruption shall be considered as if ordered by the Contracting Officer in the administration of this contract under the terms of the "Suspension of Work" clause of this contract. The period of such suspension, delay, or interruption shall be considered unreasonable, and an adjustment shall be made for any increase in the cost of performance of this contract (excluding profit) as provided in that clause, subject to all the provisions thereof.

(b) The term "environmental litigation," as used herein, means a lawsuit alleging that the work will have an adverse effect on the environment or that the Government has not duly considered, either substantively or procedurally, the effect of the work on the environment.

125. EFARS 52.249-5000 BASIS FOR SETTLEMENT OF PROPOSALS

Actual costs will be used to determine equipment cost for a settlement proposal submitted on the total cost basis under FAR 49.206-2(b). In evaluating a termination settlement proposal using the total cost basis, the following principles will be applied to determine allowable equipment costs:

(1) Actual costs for each piece of equipment, or groups of similar serial or series equipment, need not be available in the contractor's accounting records to determine total actual equipment costs.

(2) If equipment costs have been allocated to a contract using predetermined rates, those charges will be adjusted to actual costs.

(3) Recorded job costs adjusted for unallowable andunallocable expenses will be used to determine equipment operating expenses.

(4) Ownership costs (depreciation) will be determined using the contractor's depreciation schedule (subject to the provisions of FAR 31.205-11).

(5) License, taxes, storage and insurance costs are normally recovered as an indirect expense and unless the contractor charges these costs directly to contracts, they will be recovered through the indirect expense rate.

126. INAPPLICABLE PROVISIONS AND CLAUSES (Local Provision). [Applicable only for projects or delivery orders less than $100,000]

This provision applies only to delivery orders and projects less than $100,000.

Pursuant to Pub. L. 103-355, the following provisions and clauses, as noted below, are inapplicable to this contract:

(a) FAR 28.102-3, Miller Act requirements;
(b) Not Used;

(c) FAR 52.203-5, Covenant Against Contingent Fees;
(d) FAR 52.203-6, Restrictions on Subcontractor Sales to the Government;
(e) FAR 52.203-7, Anti-Kickback Procedures;
(f) FAR 52.222-4, Contract Work Hours and Safety Standards Act-Overtime Compensation; and
(g) FAR 52.223-6, Drug-Free Workplace, except for individuals.

DOCUMENT TABLE OF CONTENTS

DIVISION 00 - DOCUMENTS

SECTION 00800

SPECIAL CONTRACT REQUIREMENTS

5/00, Rev 9/01

PART 1 GENERAL

1.1 COMMENCEMENT, PROSECUTION, AND COMPLETION OF WORK (APR 1984)
1.1.1 Start Work
1.2 LIQUIDATED DAMAGES-CONSTRUCTION (SEPT 2000)
1.3 EXCEPTION TO COMPLETION TIME AND LIQUIDATED DAMAGES
1.4 CONTRACT DRAWINGS AND SPECIFICATIONS
1.4.1 SETS FURNISHED
1.4.2 NOTIFICATION OF DISCREPANCIES
1.4.3 OMISSIONS
1.5 SUBMITTALS
1.6 PHYSICAL DATA (APR 1984)
1.7 PAYMENT
1.7.1 PROMPT PAYMENT ACT
1.7.2 PAYMENTS FOR MODIFICATIONS
1.7.3 PAYMENT FOR MATERIALS DELIVERED OFFSITE (MAR 1995)
1.8 AVAILABILITY OF UTILITY SERVICES
1.9 UTILITY SERVICE INTERRUPTIONS
1.10 DIGGING PERMITS AND ROAD CLOSINGS
1.11 TIME EXTENSIONS FOR UNUSUALLY SEVERE WEATHER
1.12 INSURANCE REQUIRED
1.13 SECURITY REQUIREMENTS
1.14 CONTRACTOR QUALITY CONTROL (CQC)
1.15 NONDOMESTIC CONSTRUCTION MATERIALS
1.16 NOTICE OF PRIORITY RATING FOR NATIONAL DEFENSE USE (SEP 1990)
1.17 DAILY WORK SCHEDULES
1.18 EQUIPMENT OWNERSHIP AND OPERATING EXPENSE SCHEDULE (MAR 1995)
1.19 AS-BUILT DRAWINGS
1.20 SIGN
1.21 CONTRACTOR FURNISHED EQUIPMENT DATA
1.22 ACCOMMODATIONS FOR GOVERNMENT INSPECTORS
1.23 PERFORMANCE OF WORK BY CONTRACTOR (APR 1984)
1.24 PROFIT
1.25 LABOR CONDITIONS APPLICABLE TO TEMPORARY FACILITIES
1.26 DRAWING SCALES
1.27 WAGE RATE APPLICATION
1.27.1 Building Schedule
1.27.2 Heavy and Highway Schedule
1.28 (FAR 52.222-23) NOTICE OF REQUIREMENT FOR AFFIRMATIVE ACTION TO ENSURE EQUAL EMPLOYMENT OPPORTUNITY FOR CONSTRUCTION (FEB 1999)
1.29 FEDERAL HOLIDAYS

PART 2 NOT USED

PART 3 NOT USED

-- End of Document Table of Contents --

SECTION 00800

SPECIAL CONTRACT REQUIREMENTS
5/00, Rev 9/01

PART 1 GENERAL

Attachments:
Project Sign Details OD15-9A12 and OD15-9A22
General Wage Decision Nos. MN010007 & MN010061

1.1 COMMENCEMENT, PROSECUTION, AND COMPLETION OF WORK (APR 1984)

The Contractor shall commence work under this contract within ten (10) calendar days after the date of receipt by him of Notice to Proceed, prosecute said work diligently, and complete the entire work except seeding ready for use not later than 420 calendar days after receipt of Notice to Proceed. The time stated for completion shall include final cleanup of the premises. (FAR 52.211-10)

1.1.1 Start Work

Evidence that the Contractor has started procurement of materials, preparation and submission of shop drawings, preparation of subcontracts, and other preparatory work will satisfy the requirement that work commence within ten (10) calendar days after receipt of Notice to Proceed. Therefore, work need not be commenced at the construction site within ten (10) calendar days.

1.2 LIQUIDATED DAMAGES-CONSTRUCTION (SEPT 2000)

(a) If the Contractor fails to complete the work within the time inserted on the BIDDING SCHEDULE and in Item 11 on page 00010-1 of Standard Form 1442, the Contractor shall pay liquidated damages to the Government in the amount of $800 for each calendar day of delay until the work is completed or accepted.

(b) If the Government terminates the Contractor's right to proceed, liquidated damages will continue to accrue until the work is completed. These liquidated damages are in addition to excess costs of repurchase under the Termination clause. (FAR 52.211-12)

1.3 EXCEPTION TO COMPLETION TIME AND LIQUIDATED DAMAGES

In case the Contracting Officer determines that sodding, and/or the specified maintenance thereof is not feasible during the construction period, such work will be excepted from the completion time and liquidated damages . This work shall be accomplished during the first , sodding, period and the specified maintenance period following the completion date.

1.4 CONTRACT DRAWINGS AND SPECIFICATIONS

1.4.1 SETS FURNISHED

The contractor shall be responsible for making copies of specifications including amendments. The bid drawings as amended shall be utilized in the performance of the work until contract drawings (i.e., bid drawings that have been posted with all amendment changes) are mailed to the Contractor. See Section 01040 As-Built Drawings for drawings being furnished to the Contractor. The work shall conform to the contract drawings, set out in the drawing index, all of which form a part of these specifications. The work shall also conform to the standard details bound or referenced herein.

1.4.2 NOTIFICATION OF DISCREPANCIES

The Contractor shall check all drawings furnished him immediately upon their receipt and shall promptly notify the Contracting Officer of any discrepancies. Dimensions marked on drawings shall be followed in lieu of scale measurements. Enlarged plans and details shall govern where the same work is shown at smaller scales. All scales shown are based on a standard drawing size of 28" x 40" . If any other size drawings are furnished or plotted the contractor shall adjust the scales accordingly. The contractor shall also advise his sub-contractors of the above. The Contractor shall compare all drawings and verify the figures before laying out the work and will be responsible for any errors which might have been avoided thereby.

1.4.3 OMISSIONS

Omissions from the drawings or specifications or the misdescription of details of work which are manifestly necessary to carry out the intent of the drawings and specifications, or which are customarily performed, shall not relieve the Contractor from performing such omitted or misdescribed details of the work but they shall be performed as if fully and correctly set forth and described in the drawings and specifications.

1.5 SUBMITTALS

Government approval is required for submittals with a "G" designation; submittals not having a "G" designation are for information only. When used, a designation following the "G" designation identifies the office that will review the submittal for the Government. The following shall be submitted in accordance with Section 01330SUBMITTAL PROCEDURES:

SD-02 Shop Drawings

Equipment Room Drawings; G-A.

1.6 PHYSICAL DATA (APR 1984)

Data and information furnished or referred to below is for the Contractors' information. The Government shall not be responsible for any interpretation of or conclusion drawn from the data or information by the Contractor.

a. The indications of physical conditions on the drawings and in the specifications are the result of site investigations by surveys and borings . The data shown graphically and by symbol for each respective boring represents the actual geologic features observed and logged at the location given on the drawings. While the borings are representative of subsurface conditions at their respective locations and for their respective vertical reaches, local minor variations characteristic of the subsurface materials of this region could occur.

b. Weather conditions shall have been investigated by the Contractor to satisfy himself as to the hazards likely to arise therefrom. Complete weather records and reports may be obtained from the local U.S. Weather Bureau.

c. Transportation facilities shall have been investigated by the Contractor to satisfy himself as to the existence of access highways and railroad facilities. (FAR 52.236-4)

1.7 PAYMENT

1.7.1 PROMPT PAYMENT ACT

Pay requests authorized in CONTRACT CLAUSES clause: "Payments Under Fixed-Price Construction Contracts", will be paid pursuant to the clause, "Prompt Payment for Construction Contracts". Pay requests will be submitted on ENG Form 93 and 93a, "Payment Estimate-Contract Performance" and "Continuation". All information and substantiation required by the identified contract clauses will be submitted with the ENG Form 93, and the required certification will be included on the last page of the ENG Form 93a, signed by an authorized contractor official and dated when signed. The designated billing office is the Office of the Area Engineer.

1.7.2 PAYMENTS FOR MODIFICATIONS

Payments may be made for cost bearing change orders within the scope of the contract only to the extent funds are authorized in the order on a two-part modification. Contractor pricing proposed must be submitted at the earliest possible time after the change order is issued, or at a specific time as directed by the Contracting Officer. At the discretion of the Contracting Officer, any and all payments may be withheld on the modification until the Contractor has submitted a qualifying price proposal, in as much detail as required by the Contracting Officer, and the final price has been agreed.

1.7.3 PAYMENT FOR MATERIALS DELIVERED OFFSITE (MAR 1995)

a. Pursuant to FAR clause 52.232-5, Payments Under Fixed Priced Construction Contracts, materials delivered to the contractor at locations other than the site of the work may be taken into consideration in making payments if included in payment estimates and if all the conditions of the General Provisions are fulfilled. Payment for items delivered to locations other than the work site will be limited to: (1) materials required by the technical provisions; or (2) materials that have been fabricated to the point where they are identifiable to an item of work required under this contract.

b. Such payment will be made only after receipt of paid or receipted invoices or invoices with canceled check showing title to the items in the prime contractor and including the value of material and labor incorporated into the item. Payment for materials delivered off-site includes petroleum products. (List additional items for which payments will be made for off-site delivery.) (EFAR 52.232-5000)

1.8 AVAILABILITY OF UTILITY SERVICES

All reasonably required amounts of domestic water and electricity will be made available to the Contractor by the Government from existing system

outlets and supplies. The Contractor shall, at his own expense, make all temporary connections and install distribution lines. The Contractor shall furnish to the Contracting Officer a complete system layout drawing showing type of materials to be used and method of installation for all temporary electrical systems. Meters shall be installed by the Contractor to determine the amount of water and electricity used by him, and such utilities will be paid for by or charged to the Contractor. All temporary lines shall be maintained by the Contractor in a workmanlike manner satisfactory to the Contracting Officer and shall be removed by the Contractor in like manner prior to final acceptance of the construction. Normal quantities of electricity and water used to make final tests of completely installed systems will be furnished by the Government.]

1.9 UTILITY SERVICE INTERRUPTIONS

The Contractor shall submit written notification not less than 15 calendar days in advance of each interruption of each utility and communication service to or within existing buildings and facilities being used by others. No single outage will exceed 4 hours unless approved in writing. The time and duration of all outages will be coordinated and approved with the Using Agency by the Contracting Officer.

1.10 DIGGING PERMITS AND ROAD CLOSINGS

The Contractor shall allow 14 calendar days from date of written application to receive permission to dig and to close roads. Roads shall only be closed one lane at a time and vehicular traffic shall be allowed to pass through the construction area. Work on or near roadways shall be flagged in accordance with the safety requirements in Safety and Health Requirements Manual EM 385-1-1, which forms a part of these specifications. Work located along the alert force route shall not cause blockage and the Contractor shall maintain unobstructed access for alert force traffic at all times.

1.11 TIME EXTENSIONS FOR UNUSUALLY SEVERE WEATHER

a. This clause specifies the procedure for the determination of time extensions for unusually severe weather in accordance with the contract clause entitled "Default: (Fixed-Price Construction)." In order for the Contracting Officer to award a time extension under this clause, the following conditions must be satisfied:

(1) The weather experienced at the project site during the contract period must be found to be unusually severe, that is, more severe than the adverse weather anticipated for the project location during any given month.

(2) The unusually severe weather must actually cause a delay to the completion of the project. The delay must be beyond the control and without the fault or negligence of the contractor.

b. The following schedule of monthly anticipated adverse weather delays is based on National Oceanic and Atmospheric Administration (NOAA) or similar data for the project location and will constitute the base line for monthly weather time evaluations. The contractor's progress schedule must reflect these anticipated adverse weather delays in all weather dependent activities.

MONTHLY ANTICIPATED ADVERSE WEATHER DELAY

WORK DAYS BASED ON (5) DAY WORK WEEK

JAN	FEB	MAR	APR	MAY	JUN	JUL	AUG	SEP	OCT	NOV	DEC
(*)	(19)	(10)	(04)	(07)	(08)	(06)	(07)	(06)	(04)	(06)	(22)

* Anticipate losing entire month to adverse weather.

c. Upon acknowledgment of the Notice to Proceed (NTP) and continuing throughout the contract, the contractor will record on the daily CQC report, the occurrence of adverse weather and resultant impact to normally scheduled work. Actual adverse weather delay days must prevent work on critical activities for 50 percent or more of the contractor's scheduled work day. The number of actual adverse weather delay days shall include days impacted by actual adverse weather (even if adverse weather occurred in previous month), be calculated chronologically from the first to the last day of each month, and be recorded as full days. If the number of actual adverse weather delay days exceeds the number of days anticipated in paragraph b. above, the contracting officer will convert any qualifying delays to calendar days, giving full consideration for equivalent fair weather work days, and issue a modification in accordance with the contract clause entitled "Default (Fixed Price Construction)". (ER 415-1-15)

1.12 INSURANCE REQUIRED

In accordance with CONTRACT CLAUSES clause: "Insurance Work on a Government Installation," the Contractor shall procure the following minimum insurance:

Type	Amount
Workmen's Compensation and Employer's Liability Insurance	$100,000
General Liability Insurance	$500,000 per occurrence
Automobile Liability Insurance	
Bodily injury	$200,000 per person and $500,000 per occurrence
Property damage	$ 20,000 per occurrence

(Coverages per FAR 28.307-2)

1.13 SECURITY REQUIREMENTS

The Contractor shall be responsible for furnishing to each employee and for requiring each employee engaged on the work to display such identification as may be approved and directed by the Contracting Officer. All prescribed identification shall immediately be delivered to the Contracting Officer, for cancellation upon release of any employees. When the contract involves work in restricted security areas, only employees who are U.S. citizens will be permitted to enter. Proof of U.S. citizenship is required prior to entry. When required by the Contracting Officer, the Contractor shall obtain and submit fingerprints of all persons employed or to be employed on the project. (Based on FAR 52.204-2)

1.14 CONTRACTOR QUALITY CONTROL (CQC)

See Section 01451 Contractor Quality Control.

1.15 NONDOMESTIC CONSTRUCTION MATERIALS

The List of nondomestic construction materials or their components included in the list set forth in paragraph 25.104 of the Federal Acquisition Regulation does not apply to the requirements of the contract clause entitled "Buy American Act Construction Materials".

1.16 NOTICE OF PRIORITY RATING FOR NATIONAL DEFENSE USE (SEP 1990)

Any contract awarded as a result of this solicitation will be a DO rated order certified for national defense use under the Defense Priorities and Allocations System (DPAS) (15 CFR 700), and the Contractor will be required to follow all of the requirements of this regulation. (FAR 52.211-14)

1.17 DAILY WORK SCHEDULES

In order to closely coordinate work under this contract, the Contractor shall prepare a written agenda/meeting minutes and attend a weekly coordination meeting with the Contracting Officer and Using Service at which time the Contractor shall submit for coordination and approval, his proposed daily work schedule for the next two week period. The Contractor shall provide a copy of modifications (MODs), Serial Letters, Requests for Information (RFIs)and any other innformation that is needed in the minutes of the meeting. Required temporary utility services, time and duration of interruptions, and protection of adjoining areas shall be included with the Contractor's proposed 2-week work schedule. At this meeting, the Contractor shall also submit his schedule of proposed dates and times of all preparatory inspections to be performed during the next 2 weeks. The items of work listed on the proposed 2-week schedule are to be keyed to the NAS by activity number and description for each activity anticipated to be performed during the next 2-week period. Coordination action by the Contracting Officer relative to these schedules will be accomplished during these weekly meetings. Daily reports shall be completed and given to the Contracting Officer or Representative within 24 hours of work

1.18 EQUIPMENT OWNERSHIP AND OPERATING EXPENSE SCHEDULE (MAR 1995)

a. This statement shall become operative only for negotiated contracts where cost or pricing data is requested, and for modifications to sealed bid or negotiated contracts where cost or pricing data is requested. This clause does not apply to terminations. See 52.249-5000, Basis for settlement of proposals and FAR Part 49.

b. Allowable cost for construction and marine plant and equipment in sound workable condition owned or controlled and furnished by a Contractor or subcontractor at any tier shall be based on actual cost data for each piece of equipment or groups of similar serial and series for which the Government can determine both ownership and operating costs from the Contractor's accounting records. When both ownership and operating costs cannot be determined for any piece of equipment or groups of similar serial or series of equipment from the Contractor's accounting records, costs for that equipment shall be based upon the applicable provisions of EP 1110-1-8, "Construction Equipment Ownership and Operating Expense Schedule," Region IV. Copies of each regional schedule may be obtained through the following internet site: http://www.usace.army.mil/inet/usace-docs/eng-pamphlets/ep.htm. Working conditions shall be considered to be average for determining equipment rates using the schedule unless specified otherwise by the Contracting Officer. For equipment not included in the schedule, rates for comparable pieces of equipment may be developed using the formula provided in the

schedule. For forward pricing, the Schedule in effect at the time of negotiations shall apply. For retrospective pricing, the Schedule in effect at the time the work was performed shall apply.

c. Equipment rental costs are allowable, subject to the provisions of FAR 31.105(d)(ii) and FAR 31.205-36. Rates for equipment rented from an organization under common control, lease-purchase arrangements, and sale-leaseback arrangements will be determined using the schedule, except that actual rates will be used for equipment leased from an organization under common control that has an established practice of leasing the same or similar equipment to unaffiliated lessees.

d. When actual equipment costs are proposed and the total amount of the pricing action exceeds the small purchase threshold, the contracting officer shall request the contractor to submit either certified cost or pricing data, or partial/limited data as appropriate. The data shall be submitted on Standard Form 1411, Contract Pricing Proposal Cover Sheet. (EFARS 52.231-5000)

1.19 AS-BUILT DRAWINGS

See SECTION 01040 - AS-BUILT DRAWINGS

1.20 SIGN

On commencement of work on this project, the Contractor shall furnish and erect the temporary sign in the location selected by the Contracting Officer near the project site. The Contractor shall maintain the sign in good condition through the project construction period. Upon completion of the project the Contractor shall remove the sign from the premises. The project sign shall conform to Standard Drawing OD15-9A12 and OD15-9A22 bound herein. A decal of the "Engineer Castle" will be furnished the Contractor upon request.

1.21 CONTRACTOR FURNISHED EQUIPMENT DATA

See Section 01200 Warranty of Construction for Contractor Furnished Equipment Data to be submitted as part of the Warranty Equipment Booklet.

1.22 ACCOMMODATIONS FOR GOVERNMENT INSPECTORS

The Contractor shall furnish a temporary office facility approximately 10 feet x 20 feet with a minimum of 200 square feet of floor space. It shall be located where directed and shall be reserved for Government personnel only. Drinking water facilities, adequate lighting, local commercial telephone service, air-conditioning, heating equipment, and a partition enclosed chemical toilet shall be furnished and maintained by the Contractor. The office shall be furnished with one legal size filing cabinet with four drawers, one drafting table with stool, one plan rack, one desk, and three chairs. Used furniture, in good condition, will be acceptable. Entrance doors shall be equipped with a substantial lock. The Contractor shall provide janitor service, fuel for the heating facilities, electricity, telephone and water, all at no cost to the Government, except the Contractor will not be liable for Government long-distance calls. Building shall be constructed so as to be easily moved and the Contractor shall relocate the building twice during the contract, if so directed. The entire facility, including furniture, will remain the property of the Contractor and shall be removed from the site after completion of the work.

1.23 PERFORMANCE OF WORK BY CONTRACTOR (APR 1984)

The Contractor shall perform on the site, and with its own organization, work equivalent to at least twenty (20) percent of the total amount of work to be performed under the contract. This percentage may be reduced by a supplemental agreement to this contract if, during performing the work, the Contractor requests a reduction and the Contracting Officer determines that the reduction would be to the advantage of the Government. (FAR 52.236-1)

1.24 PROFIT

a. Weighted guidelines method of determining profit shall be used on any equitable adjustment change order or modification issued under this contract. The profit factors shall be as follows:

Factor	Rate	Weight	Value
Degree of Risk	20		
Relative difficulty of work	15		
Size of Job	15		
Period of performance	15		
Contractor's investment	5		
Assistance by Government	5		
Subcontracting	25		
	100		

b. Based on the circumstances of each procurement action, each of the above factors shall be weighted from .03 to .12 as indicated below. The value shall be obtained by multiplying the rate by the weight. The value column when totalled indicates the fair and reasonable profit percentage under the circumstances of the particular procurement.

(1) Degree of Risk. Where the work involves no risk or the degree of risk is very small, the weighting should be .03; as the degree of risk increases, the weighting should be increased up to a maximum of .12. Lump sum items will have, generally, a higher weighted value than the unit price items for which quantities are provided. Other things to consider: the portion of the work to be done by subcontractors, nature of work, where work is to be performed, reasonableness of negotiated costs, amount of labor included in costs, and whether the negotiation is before or after performance of work.

(2) Relative Difficulty of Work. If the work is most difficult and complex, the weighting should be .12 and should be proportionately reduced to .03 on the simplest of jobs. This factor is tied in to some extent with the degree of risk. Some things to consider: the nature of the work, by whom it is to be done, where, and what is the time schedule.

(3) Size of Job. All work not in excess of $100,000 shall be weighted at .12. Work estimated between $100,000 and $5,000,000 shall be proportionately weighted from .12 to .05.

(4) Periods of Performance. Jobs in excess of 24 months are to be weighted at .12. Jobs of lesser duration are to be proportionately

weighted to a minimum of .03 for jobs not to exceed 30 days. No weight where additional time not required.

(5) Contractor's Investment. To be weighted from .03 to .12 on the basis of below average, average, and above average. Things to consider: amount of subcontracting, mobilization payment item, Government furnished property, equipment and facilities, and expediting assistance.

(6) Assistance by Government. To be weighted from .12 to .03 on the basis of average to above average. Things to consider: use of Government-owned property, equipment and facilities, and expediting assistance.

(7) Subcontracting. To be weighted inversely proportional to the amount of subcontracting. Where 80 percent or more of the work is to be subcontracted, the weighting is to be .03 and such weighting proportionately increased to .12 where all the work is performed by the Contractor's own forces.

1.25 LABOR CONDITIONS APPLICABLE TO TEMPORARY FACILITIES

It is the position of the Department of Defense that the Davis-Bacon Act, 40 U.S.C. 276a is applicable to temporary facilities such as batch plants, sandpits, rock quarries, and similar operations, located off the immediate site of the construction but set up exclusively to furnish required materials for a construction project on the site of the work. Clause "Payrolls and Basic Records" of the CONTRACT CLAUSES is applicable to such operations.

1.26 DRAWING SCALES

All scales shown are based on a standard drawing size of 28" x 40" . If any other size drawings are furnished or plotted, the contractor shall adjust the scales accordingly. The Contractor shall also advise his sub-contractors of the above.

1.27 WAGE RATE APPLICATION

For copies of Wage Rates, See Attachment: GENERAL WAGE DECISIONS.

1.27.1 Building Schedule

Applicable to all work required within 5 feet outside the building lines.

1.27.2 Heavy and Highway Schedule

Applicable to all work required beyond 5 feet outside the building.

1.28 (FAR 52.222-23) NOTICE OF REQUIREMENT FOR AFFIRMATIVE ACTION TO ENSURE EQUAL EMPLOYMENT OPPORTUNITY FOR CONSTRUCTION (FEB 1999)

(a) The offeror's attention is called to the Equal Opportunity clause and the Affirmative Action Compliance Requirements for Construction clause of this solicitation.

(b) The goals for minority and female participation, expressed in percentage terms for the Contractor's aggregate workforce in each trade on

all construction work in the covered area, are as follows:

Goals for Minority Participation for Each Trade	Goals for Female Participation for Each Trade
2.9	6.9

These goals are applicable to all the Contractor's construction work performed in the covered area. If the Contractor performs construction work in a geographical area located outside of the covered area, the Contractor shall apply the goals established for the geographical area where the work is actually performed. Goals are published periodically in the Federal Register in notice form, and these notices may be obtained from any Office of Federal Contract Compliance Programs Office.

(c) The Contractor's compliance with Executive Order 11246, as amended, and the regulations in 41 CFR 60-4 shall be based on (1) its implementation of the Equal Opportunity clause, (2) specific affirmative action obligations required by the clause entitled "Affirmative Action Compliance Requirements for Construction," and (3) its efforts to meet the goals. The hours of minority and female employment and training must be substantially uniform throughout the length of the contract, and in each trade. The Contractor shall make a good faith effort to employ minorities and women evenly on each of its projects. The transfer of minority or female employees or trainees from Contractor to Contractor, or from project to project, for the sole purpose of meeting the Contractor's goals shall be a violation of the contract, Executive Order 11246, as amended, and the regulations in 41 CFR 60-4. Compliance with the goals will be measured against the total work hours performed.

(d) The Contractor shall provide written notification to the Deputy Assistant Secretary for Federal Contract Compliance, U.S. Department of Labor, within 10 working days following award of any construction subcontract in excess of $10,000 at any tier for construction work under the contract resulting from this solicitation. The notification shall list the -

(1) Name, address, and telephone number of the subcontractor;

(2) Employer identification number of the subcontractor;

(3) Estimated dollar amount of the subcontract;

(4) Estimated starting and completion dates of the subcontract; and

(5) Geographical area in which the subcontract is to be performed.

(e) As used in this Notice, and in any contract resulting from this solicitation, the "covered area" is Minneapolis-St. Paul, MN SMSA-5120, which Hennepin county is a part of.

1.29 FEDERAL HOLIDAYS

The following Federal legal holidays are observed by this installation:

New Year's Day	1 January
Martin Luther King's Birthday	Third Monday in January
President's Day	Third Monday in February

Memorial Day	Last Monday in May
Independence Day	4 July
Labor Day	First Monday in September
Columbus Day	Second Monday in October
Veterans Day	11 November
Thanksgiving Day	Fourth Thursday in November
Christmas Day	25 December

If a wage determination applies the number of holidays specified on it, it has priority over this clause.

PART 2 NOT USED

PART 3 NOT USED

-- End of Section --

A B C D E F G H I
J K L M N O P Q R
S T U V W X Y Z
a b c d e f g h i j k l m
n o p q r s t u v w x y z
1 2 3 4 5 6 7 8 9 10

A B C D E F G H I J K L M
N O P Q R S T U V W X Y Z
a b c d e f g h i j k l m
n o p q r s t u v w x y z
1 2 3 4 5 6 7 8 9 10

Note: Above lettering styles are Helios Extra Bold Condensed and Helios Bold II. Helvetica Black Roman and Helvetica Bold Roman are acceptable substitutes.

STANDARD
ALPHABET & NUMERALS

OFFICE OF THE DISTRICT ENGINEER
OMAHA, NEBRASKA
REV. NOVEMBER, 1982

00800AT1

OD15-9A12

NOTES:

1. Posts to be S4S.
2. Plywood shall be exterior type, A-C grade.
3. Before painting, surface to be clean, dry, free from grease and sanded.
4. Paint with one prime coat zinc oxide and two finish coats of Color Number 20122 in Fed. Std. 595A, brown gloss exterior type enamel, conforming to Fed. Specs. TT-E-489.
5. All lettering to be Color Number 27875 in Fed. Std. 595A, white gloss, exterior type enamel.
6. Decalcomania for Corps of Engineers Insignia and HQ USAF Engineering and Services Directorate Emblem will be furnished by the Contracting Officer for installation by the Contractor.
7. All exposed wood (posts, supports, back, etc.) shall be painted the same background color as the sign.

SCHEDULE

SPACE	HEIGHT	LINE	DESCRIPTION	LETTER HEIGHT	STROKE
A	5"	1	U.S. AIR FORCE PROJECT	1.5"	3/16"
B	1"	2	IN PARTNERSHIP WITH	1.5"	3/16"
C	1"	3	U.S. ARMY CORPS OF ENGINEERS	1.5"	3/16"
D	5"	4	PROJECT NAME	4"	1/2"
E	3"	5	PROJECT NAME CONT'D (IF REQ.)	4"	1/2"
F	5"	6	GENERAL CONTRACTOR/A-E	1.5"	3/16"
G	1"	7	GENERAL CONTRACTOR/A-E	1.5"	3/16"
H	4"	8	PLANNED COMPLETION DATE	2.5"	1/4"
I	5"				

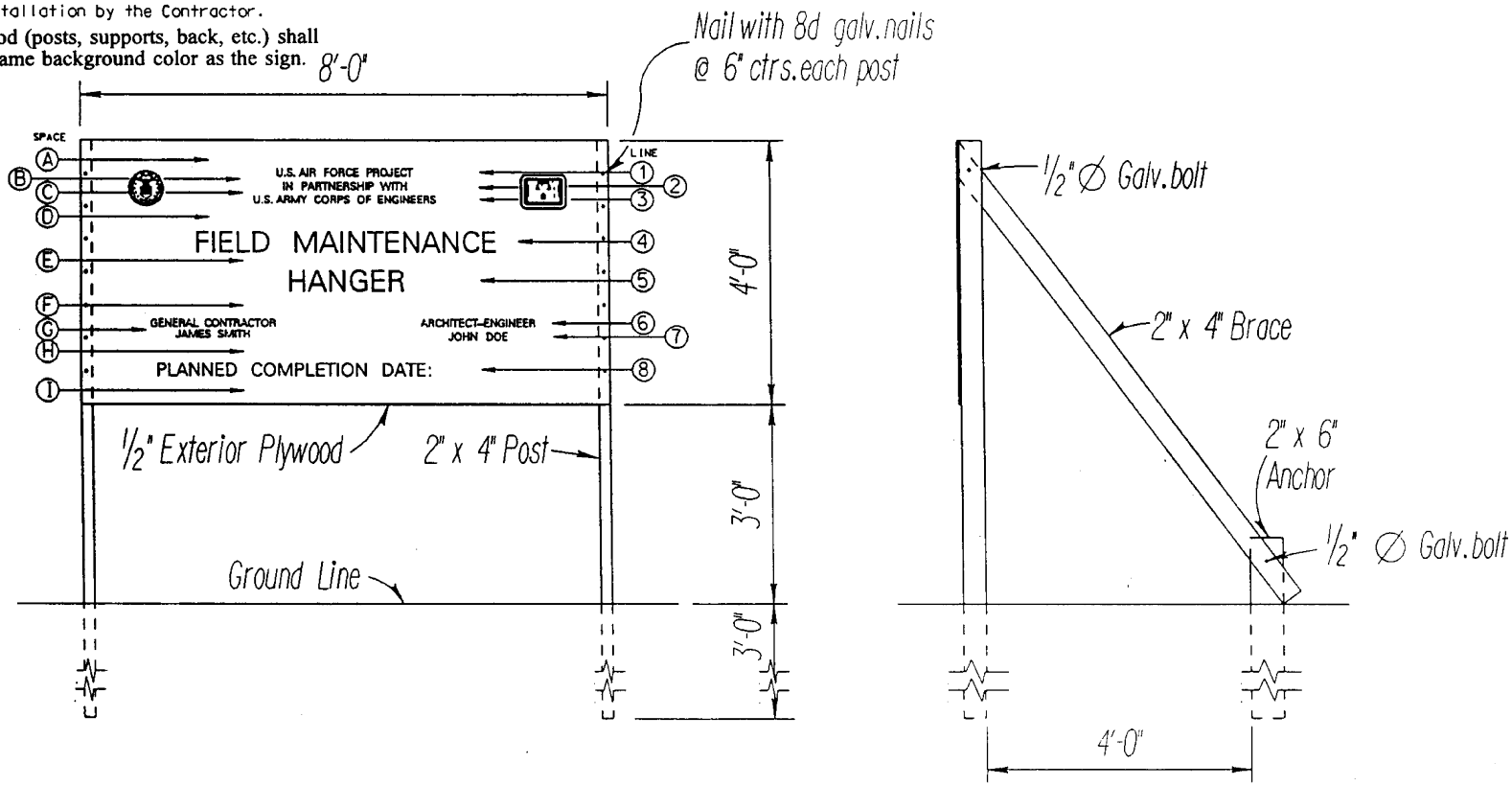

FRONT VIEW

END VIEW

STANDARD
PROJECT SIGN
U.S. AIR FORCE MCP PROJECTS
OFFICE OF THE DISTRICT ENGINEER
OMAHA, NE
REV. OCTOBER 1993

00800AT2

OD15-9A22

General Decision Number MN010007

General Decision Number MN010007
Superseded General Decision No. MN000007

State: Minnesota

Construction Type:
BUILDING
RESIDENTIAL

County(ies):

ANOKA	HENNEPIN	SHERBURNE
BENTON	ITASCA	ST LOUIS
CARLTON	KOOCHICHING	STEARNS
CARVER	LAKE	WASHINGTON
COOK	RAMSEY	
DAKOTA	SCOTT	

*BUILDING CONSTRUCTION PROJECTS - DOES NOT INCLUDE BENTON & STEARNS COUNTIES (Does not include Treatment Plants)
RESIDENTIAL CONSTRUCTION PROJECTS (Consisting of single family homes and apartments up to and including 4 stories, Does not include Itasca County or Leech Lake Indian Reservation)

Modification Number	Publication Date
0	03/02/2001
1	04/06/2001
2	05/11/2001
3	06/01/2001
4	06/29/2001
5	07/27/2001
6	08/17/2001
7	10/19/2001
8	11/30/2001

COUNTY(ies):

ANOKA	HENNEPIN	SHERBURNE
BENTON	ITASCA	ST LOUIS
CARLTON	KOOCHICHING	STEARNS
CARVER	LAKE	WASHINGTON
COOK	RAMSEY	
DAKOTA	SCOTT	

ASBE0034A 06/01/2001

	Rates	Fringes
ANOKA, BENTON, CARVER, DAKOTA, HENNEPIN, RAMSEY, SCOTT, SHERBURNE, STEARNS & WASHINGTON COUNTIES:		
INSULATOR/ASBESTOS WORKERS (Includes application of all insulating materials, protective coverings, coatings & finishings to all types of mechanical systems)	28.09	11.49

ASBE0049B 06/01/2001

	Rates	Fringes
CARLTON, COOK, ITASCA, KOOCHICHING, LAKE & ST. LOUIS COUNTIES:		
ASBESTOS WORKERS/INSULATORS (Includes application of all insulating materials, protective coverings, coatings & finishings to all types of mechanical systems)	28.35	7.21

ASBE0205B 05/01/1998

	Rates	Fringes
ANOKA, BENTON, CARLTON, CARVER, COOK, DAKOTA, HENNEPIN, ITASCA, KOOCHICHING, LAKE, RAMSEY, SCOTT, SHERBURNE, ST. LOUIS, STEARNS & WASHINGTON COUNTIES:		
HAZARDOUS MATERIAL HANDLERS (Includes preparation, wetting, stripping, removal, scrapping, vacuuming, bagging & disposing of all insulation materials, whether they contain asbestos or not, from mechanical systems)	18.21	3.30

BOIL0647B 10/01/1999

	Rates	Fringes
BOILERMAKERS	23.35	9.71

* BRMN0001A 05/01/2001

	Rates	Fringes
ANOKA, CARVER, DAKOTA, HENNEPIN, RAMSEY, SCOTT, SHERBURNE (City of Elk River) & WASHINGTON COUNTIES		
BRICKLAYERS & STONEMASONS	27.37	8.09

BRMN0001D 05/01/2000

	Rates	Fringes
ALL COUNTIES, EXCEPT the city of Duluth in ST. LOUIS COUNTY:		
MARBLE SETTERS	25.08	7.96

* BRMN0001J 05/01/2001

	Rates	Fringes
BENTON, SHERBURNE (Excluding city of Elk River) & STEARNS COUNTIES		
BRICKLAYERS, BLOCKLAYERS, AND STONEMASONS	24.98	8.09

* BRMN0001M 05/01/2001

	Rates	Fringes
BENTON COUNTY		
CEMENT MASONS	24.51	7.99
STEARNS COUNTY		
CEMENT MASONS & PLASTERERS	24.51	7.99

BRMN0001Q 05/01/1999

	Rates	Fringes
ALL COUNTIES, EXCEPT CARLTON, COOK, LAKE & ST. LOUIS (City of Duluth and south of Township Line 55):		
TILE SETTERS	24.24	6.95

BRMN0001U 05/01/1999

	Rates	Fringes
MARBLE SETTERS' FINISHERS & TILE SETTERS' FINISHERS	20.59	5.95

BRMN0003B 05/01/2001

	Rates	Fringes
CARLTON, COOK, LAKE & ST. LOUIS (South of a line between Townships #54 & #55, 2 miles north of Cotton) COUNTIES:		
BRICKLAYERS	24.93	9.41

BRMN0003C 06/01/2001

	Rates	Fringes
CARLTON, COOK, LAKE & ST. LOUIS (S. of a line between Townships 54 & 55 ((2 miles north of Cotton)) COUNTIES:		
MARBLE SETTERS & TILE SETTERS	20.61	7.35

BRMN0015B 09/04/2000

	Rates	Fringes
KOOCHICHING COUNTY:		
BRICKLAYERS	25.03	6.17

BRMN0015D 09/04/2000

	Rates	Fringes
KOOCHICHING COUNTY:		
CEMENT MASONS	24.63	6.17

BRMN0016A 05/01/2000

	Rates	Fringes
ITASCA & ST. LOUIS (North of a line between Townships #54 & #55, 2 miles north of Cotton) COUNTIES:		
BRICKLAYERS	23.26	9.23

BRMN1000G 05/01/2000

	Rates	Fringes
TERRAZZO WORKERS	26.21	6.85
TERRAZZO BASE MACHINES	24.58	7.96
FLOOR MECHANICS; TERRAZZO WORKERS' FINISHERS	24.25	7.96

CARP0190A 05/01/1997

	Rates	Fringes
ANOKA, BENTON, CARVER, DAKOTA, HENNEPIN, RAMSEY, SCOTT, SHERBURNE, STEARNS & WASHINGTON COUNTIES:		
LATHERS	22.45	7.04

CARP0361A 05/01/2001

	Rates	Fringes
CARLTON, COOK, LAKE (South part, excluding Sawbill Landing) & ST. LOUIS (Alborn, Arnold, Bartlett, Birch, Brookstone, Canyon, Clinton, Culver, Duluth, Floodwood, Gowan, Island, Kelsey, Lakewood, Meadowlands, Munger, Palmers, Payne, Prasit, Shaw & Taft) COUNTIES:		
CARPENTERS:		
Single family & Duplex Residences	17.46	9.91
All Other Work	20.54	9.91

CARP0361E 05/01/2001

	Rates	Fringes
CARLTON, COOK, LAKE (South part, excluding Sawbill Landing) & ST. LOUIS (Alborn, Arnold, Bartlett, Birch, Brookstone, Canyon, Clinton, Culver, Duluth, Floodwood, Gowan, Island, Kelsey, Lakewood, Meadowlands, Munger, Palmers, Payne, Prasit, Shaw & Taft) COUNTIES		
SOFT FLOOR LAYERS	19.73	9.63

CARP0361H 05/01/2001

	Rates	Fringes
CARLTON, COOK, ITASCA, KOOCHICHING, LAKE, & ST. LOUIS COUNTIES:		
LATHERS	20.82	9.91

CARP0548A 05/01/2000

	Rates	Fringes
ANOKA, BENTON, CARVER, DAKOTA, HENNEPIN, RAMSEY, SCOTT, SHERBURNE, STEARNS & WASHINGTON COUNTIES:		
MILLWRIGHTS	26.24	7.58

CARP0596A 06/01/1999

	Rates	Fringes
ANOKA, CARVER, DAKOTA, HENNEPIN, RAMSEY, SCOTT, SHERBURNE (E. of Hwy #169, inclu. Zimmerman, Big Lake & Elk River) & WASHINGTON COUNTIES:		
SOFT FLOOR LAYERS	21.73	8.32

CARP0596F 05/01/1997

	Rates	Fringes
TERRAZZO WORKERS FINISHERS	22.69	5.47

CARP0606A 05/01/2000

	Rates	Fringes
ITASCA, KOOCHICHING, LAKE (Northern part, including Sawbill Landing) & ST. LOUIS (Excluding Alborn, Arnold, Bartlett, Birch, Brookstone, Canyon, Clinton, Culver, Duluth, Floodwood, Gowan, Island, Kelsey, Lakewood, Meadowlands, Munger, Palmers, Payne, Prasit, Shaw & Taft) COUNTIES:		
CARPENTERS; PILEDRIVERMEN; & SOFT FLOOR LAYERS	18.44	9.02

CARP1348A 05/01/2000

	Rates	Fringes
CARLTON, COOK, ITASCA, KOOCHICHING, LAKE & ST. LOUIS COUNTIES:		
MILLWRIGHTS	21.66	10.29

CARP9900A 05/01/2000

	Rates	Fringes
CARPENTERS & PILEDRIVERMEN (Site Preparation, Excavation & Incidental Paving):		
AREA 1	22.77	8.50
AREA 2	20.29	7.53
AREA 3	21.09	8.98
AREA 4	21.05	9.02
AREA 5	21.49	8.98

AREA 1 - ANOKA, CARVER, DAKOTA, HENNEPIN, RAMSEY, SCOTT, SHERBURNE (SE portion, South of the northern boundary of T.33-N & east of the western boundary of R. 27-W) & WASHINGTON

COUNTIES
AREA 2 - BENTON, SHERBURNE (NW three-fourths, Including Clear Lake & Becker) & STEARNS COUNTIES
AREA 3 - CARLTON, COOK, LAKE (Southern Half, Including Two Harbors, Isabella & Finland) & ST. LOUIS (Southern one-third, Including Fond Du Lac, Floodwood, Cotton & Proctor) COUNTIES
AREA 4 - ITASCA, KOOCHICHING, LAKE (Northern Half, Excluding Two Harbors, Isabella & Finland) & ST. LOUIS (Northeast two-thirds, Including Cook, Cusson & Ely & Western Strip, Including Chisholm, Orr & Greaney) COUNTIES
AREA 5 - ST. LOUIS COUNTY (Duluth)

CARP9900F 05/01/2001

	Rates	Fringes
ANOKA, CARVER, DAKOTA, HENNEPIN, RAMSEY, SCOTT, SHERBURNE (Excluding St. Cloud & extending 5 miles beyond the city limits of St. Cloud) & WASHINGTON COUNTIES:		
COMMERCIAL BUILDING:		
Carpenters & Piledrivermen	27.06	7.63
Insulators (Other than description of Residential)	27.06	7.63
RESIDENTIAL:		
Carpenters & Piledrivermen	24.38	7.63
Insulators (Erection of or remodeling of wood frame structure, 4 stories or less; the remodeling of any existing residential structure 4 stories or less)	24.38	7.63

CARP9900O 05/01/2001

	Rates	Fringes
BENTON, SHERBURNE (Extreme NW portion, Including St. Cloud & extending 5 miles beyond the city limits of St. Cloud) & STEARNS COUNTIES:		
CARPENTERS & PILEDRIVERMEN:		
Commercial Building	19.91	6.63
Residential	17.91	6.63

ELEC0110A 05/01/2001

	Rates	Fringes
ANOKA (Except Anoka & Fridley Townships & the cities of Andover, Anoka, Columbia Heights, Coon Rapids, Fridley, Hilltop, Ramsey & Spring Lake Park), DAKOTA, RAMSEY, SHERBURNE (East of Becker and Santiago Twps), AND WASHINGTON COUNTIES		
ELECTRICIANS (Also includes new construction of multiple dwellings in excess of 4-plexes & all residential remodeling, rewiring & repairing of any apartment project exceeding 8 units or 400 amp service):		
ELECTRICIANS	28.28	13.19
CABLE SPLICERS	29.28	13.47

ELEC0110D 12/01/1998

	Rates	Fringes
ANOKA (Except Anoka & Fridley Twps, the cities of Andover, Anoka, Columbia Heights, Coon Rapids, Hilltop, Ramsey, and Spring Lake Park), DAKOTA, RAMSEY, AND WASHINGTON COUNTIES		
ELECTRICIANS (Residential up to		

& including 3 stories above grade)	18.96	6.23

ELEC0110F 03/01/1998

	Rates	Fringes
SOUND, SIGNAL & COMMUNICATIONS WORK:		
Technician (Installation of Controller Only)	19.22	.58+a+b
Installer (Excluding Controller Work)	11.31	.34+a+b

FOOTNOTES:

a. 1 year's service - 5 days' paid vacation; 2 years' service - 10 days' paid vacation; 5 years' service - 12 days' paid vacation; 7 years' service - 14 days' paid vacation; 9 years' service - 16 days' paid vacation; 11 years' service - 18 days' paid vacation; 12 years' service - 20 days' paid vacation

b. 8 Paid Holidays: New Year's Day; Memorial Day; 4th of July; Labor Day; Thanksgiving Day; Day After Thanksgiving; the normal work day preceding Christmas Day; & Christmas Day

---

ELEC0242B 06/01/2001

	Rates	Fringes
CARLTON, COOK, ITASCA (Southerly 12 townships, including Harris, Feely, Blackberry, Spang, Coodland, Sago & Wawina), LAKE & ST. LOUIS (South part bounded on the north by the north line of Kelsey Township extended east & west) COUNTIES:		
ELECTRICIANS	28.87	9.53

ELEC0292A 05/01/2000

	Rates	Fringes
ANOKA (Anoka & Fridley Townships & the cities of Andover, Anoka, Columbia Heights, Coon Rapids, Fridley, Hilltop, Ramsey & Spring Lake Park), BENTON AND SHERBURNE COUNTIES (East of Hwy 25 to Hwy 10 and an imaginary line straight west to the Mississiippi River),		
CARVER, HENNEPIN & SCOTT COUNTIES:		
ELECTRICIANS (Including 4-story residential):		
Electricians	27.50	12.18
Cable Splicers	28.50	12.62
BENTON AND SHERBURNE COUNTIES (West of Hwy 25 to Hwy 10 and an imaginary line straight west to the Mississiippi River), AND STEARNS COUNTY		
ELECTRICIANS (BUILDING CONSTRUCTION):		
ELECTRICAL CONTRACTS OVER $300,000		
Electricians	23.80	10.97
Cable Splicers	24.80	11.43
ELECTRICAL CONTRACTS UNDER $300,000		
Electricians	20.92	9.64
Cable Splicers	21.92	10.11

ELEC0292C 12/01/1998

	Rates	Fringes
ANOKA (Anoka & Fridley Townships & the cities of Andover, Anoka, Columbia Heights, Coon Rapids, Fridley, Hilltop, Ramsey & Spring Lake Park), CARVER, HENNEPIN & SCOTT COUNTIES:		
ELECTRICIANS (All new family dwellings up to & including 4 plexes and all residential remodeling, rewiring & repairing in		

apartment buildings up to & including a 400 ampere service limited to 3 floors occupied as living quarters floors & non-elevator apartment buildings) 17.82 6.06

ELEC0294B 06/01/2001

	Rates	Fringes
KOOCHICHING & ST. LOUIS (North part bounded on the south by the south line of Ellsburg Township, extended east & west) COUNTIES		
ELECTRICIANS (Excluding work up to & including 6-plexes under one roof):		
ELECTRICIANS	25.62	41.5&
CABLE SPLICERS	26.17	41.5%

ELEC0294C 06/01/2001

	Rates	Fringes
ITASCA (Excluding section south of a line extending east & west of the south line of Grand Rapids & Trout Lake Townships), KOOCHICHING & ST. LOUIS (North part bounded on the south by the south line of Ellsburg Township, extended east & west) COUNTIES:		
ELECTRICIANS (Up to & including 6-plexes under one roof)	20.65	2.82+25.5%

ELEC0294F 06/01/2001

	Rates	Fringes
ITASCA COUNTY (Excluding section south of a line extending east & west of the south line of Grand Rapids & Trout Lake Townships)		
ELECTRICIANS (Excluding work up to & including 6-plexes under one roof):		
ELECTRICIANS:		
Electrical Installations Under $3,000,000	20.65	2.82+25.5%
All Other Work:		
Electricians	25.62	41.5%
Cable Splicers	26.17	41.5%

ELEC0343F 06/01/2999

	Rates	Fringes
BENTON, SHERBURNE (Becker, Clear Lake, Haven, Palmer & Santiago Townships) & STEARNS COUNTIES:		
ELECTRICIANS (Residential Construction)	17.77	5.41

ELEV0009A 07/03/2000

	Rates	Fringes
ANOKA, CARVER, DAKOTA, HENNEPIN & RAMSEY COUNTIES AND ALL AREAS WITHIN A 100-MILE RADIUS OF MINNEAPOLIS-ST. PAUL STATE FAIR GROUNDS IN MINNEAPOLIS:		
ELEVATOR MECHANICS	27.635	6.935+a+b

FOOTNOTES:

a. 7 Paid Holidays: New Year's Day; Memorial Day; Independence Day; Labor Day; Thanksgiving Day; The Day After Thanksgiving & Christmas Day

b. Employer contributes 8% of regular hourly rate to vacation pay credit for employee who has worked in business more than 5 years; 6% for less than 5 years

---

ELEV0009F 07/03/2000

	Rates	Fringes
LAKE & ST. LOUIS COUNTIES AND ALL AREAS WITHIN A 10-MILE RADIUS OF CITY HALL IN DULUTH:		
ELEVATOR MECHANICS	27.635	6.935+a+b

FOOTNOTES:

a. 7 Paid Holidays: New Year's Day; Memorial Day; Independence Day; Labor Day; Thanksgiving Day; The Day After Thanksgiving & Christmas Day

b. Employer contributes 8% of regular hourly rate to vacation pay credit for employee who has worked in business more than 5 years; 6% for less than 5 years

---

ENGI0049D 05/01/2001

	Rates	Fringes
POWER EQUIPMENT OPERATORS (Building & Residential Construction):		
GROUP 1	28.99	7.55
GROUP 2	28.65	7.55
GROUP 3	27.24	7.55
GROUP 4	26.90	7.55
GROUP 5	26.73	7.55
GROUP 6	25.22	7.55
GROUP 7	24.10	7.55
GROUP 8	22.09	7.55

POWER EQUIPMENT OPERATOR CLASSIFICATIONS

GROUP 1 - Helicopter Operator; Truck & Crawler Crane with 200' of Boom & Over, including Jib ($.50 premium with 300' of Boom & over, including jib); & Tower Crane 250' & Over

GROUP 2 - Truck & Crawler Crane with 150' of Boom, up to but not including 200' of Boom, including Jib; & Tower Crane 200' & Over, Concrete Pump 164 ft Boom

GROUP 3 - Traveling Tower Crane; Master Mechanic; Pile Driving Operator (when 3 drums are used); Truck & Crawler Crane, up to but not including 150' of Boom, including Jib; Derrick (Guy & Stiffleg); Tower Crane (Stationary) up to 200'; & AllTerrain Vehicle Crane, Boom Truck over 100 ft.

GROUP 4 - Crawler Backhoe; Hoist Engineer (3 drums or more); Locomotive Operator; Overhead Crane Operator (inside building perimeter); & Tractor Operator with Boom

GROUP 5 - Air Compressor Operator 450 CFM or over (2 or more machines); Pump Operator and/or Conveyor Operator (2 or more machines); Mechanic; Pumpcrete or Complaco type Machine Operator; Forklift; Boom Truck up to 100 ft.; Concrete Mixer Operator; Drill Rig - Heavy Rotary or Churn when used for Caisson Drilling for Elevator Cylinder or Building Construction; Front End Loader (Over 1 cu. yd.); Hoist Engineer (1 or 2 drums); Straddle Carrier Operator; Power Plant Engineer (100 KW & over on multiples equal to 100KW & over); Tractor Operator over D2; & Well Point Pump Op.

GROUP 6 - Concrete Batch Plant Operator; Gunite Operator; Tractor Operator D2 or similar size; & Front End Loader Operator, up to 1 cu. yd.

GROUP 7 - Air Compressor Operator 600 CFM or over; Pump and/or Conveyor Operator; Brakeman; Pick-up Sweeper (1 cu. yd. & over Hopper capacity); Truck Crane Oiler; & Welding Machine Operator, Fireman temporary heat.

GROUP 8 - Mechanical Space Heater (Temporary Heat); Oiler or Greaser; & Elevator Operator

---

ENGI0049H 05/01/2001

	Rates	Fringes
POWER EQUIPMENT OPERATORS (Site Preparation, Excavation & Incidental Paving):		
ANOKA, CARVER, COOK, DAKOTA, HENNEPIN, LAKE, RAMSEY, SCOTT, SHERBURNE (S. of the northern boundary of T. 33-N & E. of the western boundary of R. 27-W), ST. LOUIS & WASHINGTON COUNTIES:		
GROUP 1	25.57	7.55
GROUP 2	25.02	7.55
GROUP 3	24.84	7.55
GROUP 4	24.72	7.55
GROUP 5	21.68	7.55
GROUP 6	20.47	7.55
BENTON (E. of the western right-of-way of U.S. Hwy #10), CARLTON, ITASCA (E. of the western right-of-way of Minn. Hwy #6), KOOCHICHING (E. of a N-S line from the Canadian border to Pelland, the western right-of-way of U.S. Hwy #71 from Pelland to Big Falls & Minn. Hwy #6), SHERBURNE (Excluding area S. of the northern boundary of T. 33-N and E. of the western boundary of R. 27-W) & STEARNS (E. of the western right-of-way of Minn. Hwy #15) COUNTIES:		
GROUP 1	23.61	7.55
GROUP 2	23.16	7.55
GROUP 3	22.99	7.55
GROUP 4	22.86	7.55
GROUP 5	20.29	7.55
GROUP 6	19.42	7.55
BENTON (Excluding E. of the western right-of-way of U.S. Hwy #10), ITASCA (Excluding area E. of the western right-of-way of Minn. Hwy #6), KOOCHICHING (Excluding area E. of a N-S line from the Canadian border to Pelland, the western right-of-way of U.S. Hwy #71 from Pelland to Big Falls & Minn. Hwy #6) & STEARNS (Excluding area E. of the Western right-of-way of Minn. Hwy #15) COUNTIES:		
GROUP 1	21.45	7.55
GROUP 2	20.52	7.55
GROUP 3	20.32	7.55
GROUP 4	20.21	7.55
GROUP 5	18.50	7.55
GROUP 6	17.90	7.55

POWER EQUIPMENT OPERATOR CLASSIFICATIONS

GROUP 1 - Helicopter Pilot; *Crane with over 135' Boom, excluding Jib; Dragline, Crawler, Hydraulic Backhoe and/or other similar equipment with Shovel-type Controls 3 cu. yds. & over Mfg. rated Cap.; & Pile Driving when 3 Drums are in use

GROUP 2 - Cableway; Concrete Mixer, Stationary Plant over 34E; Derrick (Guy or Stiffleg) (Power) (Skids or Stationary); Diver; Dragline, Crawler, Hydraulic Backhoe and/or similar equipment with Shovel-type Controls, up to 3 cu. yds. Mfg. rated cap.; Dredge or Engineers, Dredge (Power) & Engineer; Front End Loader, 5 cu. yds. & over; Grader or Motor Patrol, Finishing Earthwork & Bituminous; Locomotive Crane; Master Mechanic; Mixer (Paving) Concrete Paving, Road; Mole, including Power Supply; Mucking Machine, including Mucking Operations, Conway or similar type; Piledriving; Refrigeration Plant Engineer; Tandem Scraper; Tractor - Boom type; Truck Crane - Crawler

Crane; & Tugboat 100 HP & over

GROUP 3 - Dual Tractor; Elevating Grader; Pumpcrete; Scraper - Struck Cap. 32 cu. yds. & over; & Self-propelled Traveling Soil Stabilizer

GROUP 4 - Air Track Rock Drill; Articulated Hauler Terex, Caterpillar or similar type; Asphalt Bituminous Stabilizer Plant; Automatic Road Machine (CMI or similar); Backfiller; Bituminous Roller (8 Tons & over); Bituminous Spreader & Finishing (Power); Boom Truck (Power operated Boom); Brokk or R.T.C. 750 Remote Control or Similar types with all attachments; Cat & Scraper; Cat Tractors with Rock Wagons or similar types; Challenger 75-D or 85-D when pulling Scraper or Bulldozer; Chip Harvester & Tree Cutter over 150 HP; Concrete Batch Plant; Concrete Mixer on jobsite over 14S; Concrete Mobile; Crushing Plant (Gravel & Stone) or Gravel Washing, Crushing & Screening Plant; Curb Machine; Directional Boring Machine; Dope Machine (Pipeline); Drill Rigs, Heavy Rotary or Churn or Cable Drill; Fork Lift or Straddle Carrier; Fork Lift or Lumber Stacker; Front End Loader, over 1 cu. yd.; Hoist Engineer (Power); Hydraulic Tree Planter; Launcherman (Tankerman or Pilot License); Lead Greaser; Locomotive; Mechanic; Milling, Grinding & Planing Machine; Morbark Tub Grinder or Similar Type; Multiple Machines, such as Air Compressors, Welding Machines, Generators, Pumps; Pavement Breaker or Tamping Machine (Power Driven) Mighty Mite or similar type; Pickup Sweeper, 1 cu. yd. & over Hopper Cap.; Pipeline Wrapping, Cleaning or Bending Machine; Power Plant Engineer, 100 K.W.H. & over; Power Actuated Horizontal Boring Machine, over 6"; Pugmill; Rubber- tired Farm Tractor, Backhoe Attach.; Scraper, up to 32 cu. yds.; Skid Steer Loader, over 1 cu. yd. with Backhoe Attachment; Slip Form (Power Driven) (Paving); Tie Tamper & Ballast Machine; Tractor, Bulldozer; Tractor Operator, over 50 HP with Power Take-off; Trenching Machine (Sewer, Water, Gas); Well Point Installation; & Dismantling or Repair Mechanic

GROUP 5 - Air Compressor, 600 CFM or over; Bituminous Roller (Under 8 tons); Bituminous Rubber-tired Roller; Bituminous Spreader & Bituminous Finishing Machine Tender (Power); Concrete Distributor & Spreader Finishing Machine, Longitudinal Float, Joint Machine, & Spray; Concrete Saw (Multiple Blade) (Power Operated); Form Trench Digger (Power); Front End Loader, up to & incl. 1 cu. yd.; Grader (Motor Patrol); Gunite Gunall; Hydraulic Log Splitter; Loader (Barber Greene or similar type); Payhauler or similar type; Post Hole Driving Machine/Post Hole Augar; Power Actuated Auger & Boring Machine; Power Actuated Jack; Pump; Self-propelled Chip Spreader (Flaherty or similar); Sheep Foot Compactor with Blade - 200 HP & over; Shouldering Machine (Power) Apsco or similar type inclu. self-propelled Sand & Chip Spreader; Stump Chipper & Tree Chipper; Tractor Operator, Bulldozer, 50 HP or less; & Tree Farmer (Machine)

GROUP 6 - Challenger 75-D or 85-D when pulling Disk or Roller; Conveyor; Dredge Deck Hand; Fireman or Tank Car Heater; Gravel Screening Plant (Portable not Crushing or Washing); Greaser (Truck or Tractor); Leverman; Mechanic Tender; Mechanic, Space Heater (Temporary Heat); Oiler (Power Shovel, Crane, Dragline); Power Sweeper; Roller on Gravel Compaction; Self-propelled Vibrating Packer (35 HP & over); Sheep Foot Roller; Tractor,

Wheel Type (over 50 HP); & Truck Crane Oiler
*CRANE OVER 135' BOOM, EXCLUDING JIB - $ .25 PREMIUM;
CRANE OVER 200' BOOM, EXCLUDING JIB - $ .50 PREMIUM
UNDERGROUND WORK:
TUNNELS, SHAFTS, ETC. - $ .25 PREMIUM
UNDER AIR PRESSURE - $ .50 PREMIUM
HAZARDOUS WASTE PROJECTS (PPE Required):
LEVEL A - $1.25 PREMIUM
LEVEL B - $ .90 PREMIUM
LEVEL C - $ .60 PREMIUM

IRON0512A 07/01/2001

	Rates	Fringes
ANOKA, BENTON, CARVER, DAKOTA, HENNEPIN, RAMSEY, SCOTT, SHERBURNE, STEARNS, & WASHINGTON COUNTIES:		
IRONWORKERS	28.45	10.79

IRON0563B 05/01/2001

	Rates	Fringes
CARLTON, COOK, ITASCA, KOOCHICHING, LAKE & ST. LOUIS COUNTIES:		
IRONWORKERS	23.13	11.85

LABO0010D 05/01/2000

	Rates	Fringes
LANDSCAPERS: Seeding, Sodding & Planting of evergreen & deciduous shrubs & trees on all Work, except Residential of 4 units or less	12.38	4.36

LABO0132B 01/01/2000

	Rates	Fringes
ANOKA, BENTON, CARVER, DAKOTA, HENNEPIN, RAMSEY, SCOTT, SHERBURNE, STEARNS & WASHINGTON COUNTIES:		
LABORERS, Asbestos Abatement	19.16	6.62

LABO0132J 05/14/2001

	Rates	Fringes
ANOKA, CARVER, DAKOTA, HENNEPIN, RAMSEY, SCOTT, SHERBURNE & WASHINGTON COUNTIES		
LABORERS (Building & Residential Construction):		
GROUP 1	24.48	5.70
GROUP 2	23.98	5.70
GROUP 3	25.48	5.70
FLAGPERSON	21.85	5.70

LABORERS CLASSIFICATIONS

GROUP 1 - Construction; Carpenter Tender; Concrete; Damp Proofer Below Grade; Drill Runner Tender; Dumpman - Dirt, Asphalt, Concrete, Cement; Heater Tender; Hot Tar Caulker - Corker; Joist Handler; Material Handler - Power Buggy; Rebar; Snow Blower Operator; Signal Person; Asbestos and Hazardous Waste Technician; Hydro Blast or Waterblast; Chain Saw Operator; Concrete Saw, Drill Operator; Concrete Vibrator; Demolition & Remodeling, Excluding Demolition of an entire Structural System; Mason Tender; Mortar Mixer - Cement or any other substitute Material or Composition; Pipe Handler; Pneumatic & Electric Tool, Jackhammer, Paving Buster, Chipping Hammer, Tamper Operator, etc.; Swing Stage Line Scaffold (Not including

"Patent" Scaffolding); Torchman - Gas, Electric, Thermal or similar device; & Remote Control Tamper

GROUP 2 - Caisson Work; Mounted Wall Saw Operator; Nozzle Operator - Gunite, Cement, Sandblasting; Pipelayer; Pipe Rehab Technical, including Cleaning, Cutting, Cameraing, etc; Refractory Worker; Sheeting Setter & Driver, Heavy Building Excavation; Underground Work - Open Ditch or Excavation 8' Below Grade; & Underpinning

GROUP 3 - Driller for Blasting purposes; Dynamite Blaster or substitute products Tovex TR, Water, Gas, Gel, Bristar, Silent Dynamite, etc.

LABO0132N 06/01/1999

	Rates	Fringes
ANOKA, CARVER, DAKOTA, HENNEPIN, RAMSEY, SCOTT, SHERBURNE & WASHINGTON COUNTIES:		
PLASTER TENDERS	23.85	5.59

---

* LABO0563A 05/01/2001

	Rates	Fringes
BENTON & STEARNS COUNTIES		
LABORERS (Residential Construction):		
Total Construction Projects Over $950,000:		
GROUP 1	18.02	6.72
GROUP 2	18.77	6.72
GROUP 3	19.02	6.72
FLAGPERSON	16.11	6.72
Total Construction Projects Under $950,000:		
GROUP 1	16.27	6.72
GROUP 2	17.02	6.72
GROUP 3	17.27	6.72
FLAGPERSON	14.54	6.72

LABORER CLASSIFICATIONS

GROUP 1 - Construction Craft Laborer; Asbestos & Hazardous Waste Technician; Carpenter Tender; Chain Saw Operator; Concrete Saw, Drill Operator; Concrete Vibrator; Concrete; Damp Proofer Below Grade; Demolition & Remodeling, Excluding Demolition of an entire Structural System; Drill Runner Tender; Dump Person - Dirt, Asphalt, Concrete, Cement; Heater Tender; Hot Tar Caulker - Corker; Hydro Blast or Waterblaster; Joist Handler; Mason Tender; Material Handler - Power Buggy; Mortar Mixer - Cement or any other Substitute material or Composition; Pipe Handler; Pneumatic & Electric Tools, Jackhammer, Paving Buster, Chipping Hammer, Tamper Operator, etc.; Rebar; Remote Control Tamper; Signal Person; Snow Blower Operator; Swing Stage Line Scaffold (Not including "Patent" Scaffolding); Torchperson - Gas, Electric, Thermal or similar device

GROUP 2 - Caisson Work; Mounted Wall Saw Operator; Nozzle Operator - Gunite, Cement, Sandblasting; Pipelayer; Pipe Rehab Technician (Including Cleaning, Cutting, Cameraing, etc.); Refractory Worker; Sheeting Setter & Driver, Heavy Building Excavation; Underground Work - Open Ditch or Excavation 8' Below Grade; & Underpinning

GROUP 3 - Driller for Blasting Purposes; Dynamite Blaster or substitute products Tovel TR, Water, Gas, Gel, Bristar, Silent Dynamite, etc.

LABO1091A 05/01/1998

	Rates	Fringes
CARLTON, COOK, LAKE & ST. LOUIS (South of T 55 N) COUNTIES:		
LABORERS (Building & Residential Construction):		
GROUP 1	15.95	5.39
GROUP 2	16.10	5.39
GROUP 3	16.35	5.39
GROUP 4	16.65	5.39
FLAGPERSON	14.05	5.39

LABORER CLASSIFICATIONS

GROUP 1 - General; Carpenter Tender; Concrete Laborer; Damp Proofer Below Grade; Drill Runner Tender; Dumpman - Dirt, Asphalt, Concrete, Cement; Heater Tender; Hot Tar Caulker - Corker; Joist Handler; Rebar; Snow Blower Operator; Signalperson; Material Handler (All types Power Buggy); Fire Control; Asbestos Removal; & Hazardous Waste

GROUP 2 - Chain Saw Operator; Concrete Saw, Drill Operator; Concrete Vibrator; Demolition & Wrecking, Excluding Remodeling; Gunite, Sandblasting Machine Operator; Mason Tender; Mortar Mixer - Cement or any other substitute material or composition; Pipe Handler; Pneumatic & Electric Tools, Jackhammer, Paving Buster, Chipping Hammer, Tamper Operator, etc.; Swing Stage Line Scaffold (not including "patent" scaffolding); Torchman - Gas, Electric, Thermal or similar device; & Hydroblast

GROUP 3 - Caisson Work; Nozzle Operator - Gunite, Cement, Sandblasting; Pipelayer; Refractory Worker; Sheeting Setter & Driver, Heavy Building Excavation; Underground Work - Open Ditch or Excavation 8' Below Grade; Underpinning; & Hod Carrier

GROUP 4 - Driller for Blasting Purposes; Dynamite Blasters or substitute products Tovex TR, Water, Gas, Gel, Bristar, Silent Dynamite, etc.; Asbestos Abatement Worker; & Hazardous Waste Worker

---

LABO1091C 05/01/1999

	Rates	Fringes
CARLTON, COOK, LAKE & ST. LOUIS (South of TR 55) COUNTIES:		
LABORERS:		
Asbestos Abatement	18.16	6.80

LABO1097A 05/01/2001

	Rates	Fringes
ITASCA, KOOCHICHING & ST. LOUIS (North of T 55N) COUNTIES:		
RESIDENTIAL WORK	16.72	5.81
COMMERCIAL BUILDING:		
GROUP 1	19.67	5.81
GROUP 2	20.07	5.81
GROUP 3	20.37	5.81
Flagperson	17.77	5.81
Refractory Work	21.67	5.81

LABORERS CLASSIFICATIONS

GROUP 1 - Construction; Carpenter Tender; Concrete; Damp Proofer Below Grade; Dump Person - Dirt, Asphalt, Concrete & Cement; Heater Tender; Hot Tar Caulker - Corker; Joist Handler; Material Handler - Power Buggy; Rebar; Signal Person; & Snow Blower Operator; Chain Saw Operator; Concrete Vibrator;

Demolition & Wrecking, Excluding Remodeling; Mason Tender; Mortar Mixer - Cement or Any Other Substitute Material or Composition; Pipe Handler; Pneumatic & Electric Tool, Jackhammer, Paving Buster, Chipping Hammer, Tamper Operator, Etc.; Swing Stage Line Scaffold (Not including "Patent" Scaffolding); & Torch Person - Gas, Electric, Thermal or similar device; Scrapping, Sweeping & Clean-up; Skid Steer, Forklift (Incidental Use)

GROUP 2 - Creosote Handler; Caisson Work; Concrete Saw Drill Operator; Nozzle Operator - Gunite, Cement, Sandblasting; Pipelayer; Sheeting Setter & Driver, Heavy Building Excavation; Underground Work - Open Ditch or Excavation 8' Below Grade; Underpinning; & High Pay/Low Pay - 40 ft. Over or Under Ground Floor without Conventional Floor Areas; Pipe-Rehab Technician, including Cleaning, Cutting, Camering, etc.; & Wall Mounted Saw Operator

GROUP 3 - Driller for Blasting Purposes; Dynamite Blaster or substitute products; & Tovex TR, Water, Gas, Gel, Bristar, Silent Dynamite, etc.

LABO1097F 05/01/1999

	Rates	Fringes
ITASCA, KOOCHICHING & ST. LOUIS (North of T 55 N) COUNTIES:		
LABORERS:		
Asbestos Abatement	18.16	6.80

LABO1097H 05/01/2001

	Rates	Fringes
KOOCHICHING AND ST LOUIS (North of T 55N) COUNTIES		
RESIDENTIAL LABORER	16.72	5.81

LABO9900A 05/01/2000

	Rates	Fringes
LABORERS (Site Preparation, Excavation & Incidental Paving):		
ANOKA, CARVER, DAKOTA, HENNEPIN, RAMSEY, SCOTT, SHERBURNE & WASHINGTON COUNTIES:		
GROUP 1	20.74	5.56
GROUP 2	20.94	5.56
GROUP 3	21.09	5.56
GROUP 4	21.19	5.56
GROUP 5	21.44	5.56
GROUP 6	22.74	5.56
GROUP 7	17.04	5.31
BENTON & STEARNS COUNTIES:		
GROUP 1	16.79	5.31
GROUP 2	16.99	5.31
GROUP 3	17.14	5.31
GROUP 4	17.24	5.31
GROUP 5	17.49	5.31
GROUP 6	18.79	5.31
GROUP 7	13.89	5.11
CARLTON, COOK, LAKE & ST. LOUIS (South of T. 55 N) COUNTIES:		
GROUP 1	19.87	5.56
GROUP 2	20.07	5.56
GROUP 3	20.22	5.56
GROUP 4	20.32	5.56
GROUP 5	20.57	5.56

GROUP 6	21.87	5.56
GROUP 7	16.32	5.31
ITASCA & ST. LOUIS (North of T. 55 N) COUNTIES:		
GROUP 1	19.47	5.96
GROUP 2	19.67	5.96
GROUP 3	19.82	5.96
GROUP 4	19.92	5.96
GROUP 5	20.17	5.96
GROUP 6	21.47	5.96
GROUP 7	16.32	5.31
KOOCHICHING COUNTY:		
GROUP 1	14.34	4.61
GROUP 2	14.54	4.61
GROUP 3	14.69	4.61
GROUP 4	14.79	4.61
GROUP 5	15.04	4.61
GROUP 6	16.34	4.61
GROUP 7	12.34	4.56

LABORER CLASSIFICATIONS

GROUP 1 - Construction; Bituminous Batcherperson (Stationary Plant); Bituminous Worker - Shoveler, Raker, Floater, Squeegee, Utility; Blaster Tender; Brick Tender; Carpenter Tender; Cement Coverperson Batch Truck; Cement Handler - Bulk, Bag; Concrete Batcherperson; Concrete Handler, Caisson, Footings, Columns, Piling, Slabs, etc.; Concrete Longitudinal Float Operator (Manual Bullfloat on Paving); Concrete Shoveler, Tamper & Puddler (Paving); Conduit Layer; Curb Setter; Damp Proofer Below Grade; Demolition of an entire Structural System, Excluding Remodeling; Drill Runner Tender; Dump Operator (Dirt, Paver, Dumping Batch Truck, etc.); Fabric Installer; Grade Checker; Hydrant & Valve Setter; Hydro Blast or Waterblaster; Joint Filler (Concrete Pavement); Kettleperson (Bituminous or Lead); Labor Wrecking Demolition; Mortar Mixer; Pipe Handler; Pipelayer ($1.00 Premium); Power Buggy Operator; Pump Operator (Less than 6"); Reinforced Steel Laborer; Reinforced Steel Setter (Paving); Retaining Wall Installation; Sand Cushion Bedmaker; Service Connection Maker (Water, Gas); Signalperson; Slip Lining of Utility Lines; Soil Stabilizer; Sound Barrier & Guard Rail Installation; Squeegeeperson; Stabilizing Batcherperson (Stationary Plant); Temporary Heaters & Blower Tender; Top Person (Sewer, Water or Gas Trench); Traffic Controller (Traffic Barriers) & Transit/Level

GROUP 2 - Chain Saw; Compaction Equipment (Hand Operated or Remote Control); Concrete Drilling; Concrete Mixer Operator; Concrete Sawer; Concrete Vibrator; Ditch & Other Work more than 8' Below starting level of manual work; Formsetter; Joint Sawer, Mortar; Pipe Fuser/Technician; Pneumatic Tools, Jackhammer, Paving Buster, Chipping Hammer, etc.; Remote Control Demo Machine & Related Accessories (Electric/Hydraulic); Stone Tender/Mason Tender; & Torchperson - Gas, Electric, Thermal or Similar Device

GROUP 3 - Brick or Block Paving Setter; Caisson Work; Cofferdam Work

GROUP 4 - Bottomperson (Sewer, Water or Gas Trench - More than

8' Below starting level or manual Work); Cement Gun Operator (1 1/2" or Over); Driller - Air Track or Similar; & Nozzle Operator (Gunite, Sandblasting, Cement)

GROUP 5 - Asbestos & Hazardous Waste Tech; Tunnel Laborer; Tunnel Miner; Tunnel Miner Tender; Underground Laborer; & Underpinning

GROUP 6 - Blasting Person (Dynamite or substitute Products); & Tunnel Miner Under Pressure

GROUP 7 - Flagperson

PAIN0061A 05/01/2000

	Rates	Fringes
DAKOTA, RAMSEY & WASHINGTON COUNTIES:		
PAINTERS:		
GROUP 1	23.50	8.28
GROUP 2	17.63	8.28
GROUP 3	24.25	8.28

PAINTER CLASSIFICATIONS

GROUP 1 - Brush; Drywall Finisher; & Paperhanger

GROUP 2 - Drywall Sander

GROUP 3 - Sandblaster; Spray; Swing Stage; Boatswain Chair; Window Jack; Safety Belt; Erected Structural Steel; Bridges; & Application of Epoxy Materials & Materials containing over 50% Creosote

---

* PAIN0106A 05/01/2001

	Rates	Fringes
CARLTON, COOK, ITASCA, KOOCHICHING, LAKE & ST. LOUIS COUNTIES:		
GLAZIERS	20.11	7.24+a

FOOTNOTE:
a. 1 to 4 years' service - 1 week's paid vacation; 5 to 11 years' service - 2 weeks' paid vacation; 11 years' service or more - 3 weeks' paid vacation

---

PAIN0106D 05/01/2001

	Rates	Fringes
CARLTON, COOK, ITASCA, KOOCHICHING, LAKE & ST. LOUIS COUNTIES:		
PAINTERS:		
REPAINT & RESIDENTIAL:		
Brush; Roller; & Lead Base Paint Removal & Abatement with Basic Hand Tools such as Scrapers	21.23	7.73
Paperhanging; Spray; Steel; Taping; & Lead Base Paint Removal &		

Abatement with Other Than Basic Hand Tools	21.83	7.73
New:		
Brush; Roller	22.73	7.73
Paperhanging; Spray; Steel and Taping	23.33	7.73

PAIN0386A 05/01/2000

	Rates	Fringes
ANOKA, CARVER, HENNEPIN, SCOTT & SHERBURNE (South and East of a line drawn between the town of Santiago in Sherburne County and the town of Clearwater in Wright County) COUNTIES:		
PAINTERS:		
COMMERCIAL BUILDING CONSTRUCTION:		
Brush; Roller; & Wallpaper Hanger	24.31	7.72
Spray; Steel; Sandblaster; Swing Stage & Epoxy	25.06	7.72
RESIDENTIAL CONSTRUCTION:		
Eight Units or Less in One Building	24.31	7.72

PAIN0386C 05/01/2000

	Rates	Fringes
ANOKA, CARVER, HENNEPIN, SCOTT & SHERBURNE (South & east of a line drawn between the town of Santiago, Sherburne County and the town of Clearwater, Wright County) COUNTIES:		
PAINTERS:		
RESIDENTIAL OF 3 STORIES OR LESS IN HEIGHT:		
Drywall Taper/Finisher	19.18	7.85
ALL OTHER WORK:		
Drywall Taper/Finisher	23.97	7.85
Sander	17.98	7.85

PAIN0880A 05/01/1999

	Rates	Fringes
SIGN PAINTERS	21.12	2.08+a+b

FOOTNOTES:

a. 8 Paid Holidays: New Year's Day; Memorial Day; Independence Day; Labor Day; Thanksgiving Day; the Day After Thanksgiving; the last working Day Before Christmas; & Christmas Day

b. Vacation Pay: 3 yrs' service - 2 wks' paid vacation; 6 yrs' service - 3 wks' paid vacation; 15 yrs' service - 4 wks' paid vacation

---

PAIN0884B 06/01/2001

	Rates	Fringes
BENTON, SHERBURNE (Western one-half, North & West of a line drawn between the city of Santiago in Sherburne County & the city of Clearwater in Wright County) & STEARNS COUNTIES:		
PAINTERS:		
Brush & Roller		
Residential Work & Projects Under $8,000	15.21	6.57
All Other Work	19.01	6.57:
Taper & Finisher:		
Residential Work & Projects Under $8,000	15.21	6.57
All Other Work	19.01	6.57
Spray; Two Component Paints; Epoxies; Sandblasting & Rigging; Work done on Swing Scaffold, Safety Harness, Window Jacks, Boatswain's Chair, Coverings & Erection of Scaffolding for same; Work on Erected Structural Steel & Abrasive Blasting:		
Residential Work & Projects Under $8,000	15.81	6.57
All Other Work	19.76	6.57

PAIN1324A 06/01/1999

	Rates	Fringes
ANOKA, BENTON, CARLTON, CARVER, DAKOTA, HENNEPIN, ITASCA, KOOCHICHING, RAMSEY, SCOTT, SHERBURNE, STEARNS & WASHINGTON COUNTIES:		
GLAZIERS	24.31	7.89

PLAS0265A 06/01/2000

	Rates	Fringes
ANOKA, CARVER, DAKOTA, HENNEPIN, RAMSEY, SCOTT, SHERBURNE & WASHINGTON COUNTIES:		
PLASTERERS	24.88	8.35

PLAS0633A 05/01/2000

	Rates	Fringes
ANOKA, CARVER, DAKOTA, HENNEPIN, RAMSEY, SCOTT, SHERBURNE & WASHINGTON COUNTIES:		
CEMENT MASONS (Building & Residential)	24.99	7.96

PLAS0633D 05/01/2000

	Rates	Fringes
ANOKA, CARVER, DAKOTA, HENNEPIN, RAMSEY, SCOTT, SHERBURNE & WASHINGTON COUNTIES:		
CEMENT MASONS (Site Preparation, Excavation, & Incidental Paving)	23.79	7.96

PLAS0633K 05/01/2000

	Rates	Fringes
CARLTON, COOK, LAKE & ST. LOUIS (South of T 55N) COUNTIES:		
CEMENT MASONS (Building & Residential)	21.34	8.15

PLAS0633N 05/01/2000

	Rates	Fringes
ITASCA & ST. LOUIS (North of T 55N) COUNTIES:		
CEMENT MASONS:		
Commercial Building	18.20	9.00
Residential	14.85	9.00

PLAS0633T 05/01/2000

	Rates	Fringes
CARLTON, COOK, LAKE & ST. LOUIS (South of T. #55 north) COUNTIES:		
CEMENT MASONS (Site Preparation, Excavation & Incidental Paving)	20.33	10.70

PLAS0633X 05/01/2000

	Rates	Fringes
ITASCA & ST. LOUIS (North of T 55N) COUNTIES:		
CEMENT MASONS (Site Preparation, Excavation & Incidental Paving)	18.20	9.00

PLAS6330C 05/01/2000

	Rates	Fringes
CARLTON, COOK, ITASCA, LAKE & ST. LOUIS COUNTIES:		
PLASTERERS	19.62	8.70

PLAS6330V 05/01/2000

	Rates	Fringes
BENTON & KOOCHICHING COUNTIES:		
PLASTERERS	17.75	4.65

PLUM0011A 05/01/2001

	Rates	Fringes
CARLTON, COOK (A strip 20 miles inland along the shores of Lake Superior), LAKE (A strip 20 miles inland along the shores of Lake Superior) & ST. LOUIS (South of an east-west line drawn through Cotton) COUNTIES		
PLUMBERS, PIPEFITTERS and STEAMFITTERS	26.35	9.15

PLUM0015A 05/01/2001

	Rates	Fringes
ANOKA, CARVER, HENNEPIN, SCOTT & SHERBURNE (East of a line running northeasterly from the point of Wright County that lies furthest north to that point of Mille Lacs County that is south by west) COUNTIES		
PLUMBERS	28.80	9.71+a

FOOTNOTE:
a. Paid Holiday: Labor Day

PLUM0015F 05/01/2001

	Rates	Fringes
BENTON & STEARNS COUNTIES		
PLUMBERS	25.80	9.71+a

FOOTNOTE:
a. Paid Holiday: Labor Day

PLUM0034B 05/01/2001

	Rates	Fringes
DAKOTA, RAMSEY & WASHINGTON COUNTIES		
PLUMBERS	28.90	9.68+a

FOOTNOTE:
a. 1 Paid Holiday: Labor Day

PLUM0417A 06/01/2001

	Rates	Fringes
ANOKA, DAKOTA, HENNEPIN, RAMSEY, SCOTT & WASHINGTON COUNTIES:		
SPRINKLER FITTERS	29.42	11.17+a

FOOTNOTE:
a. 6 Paid Holidays: Memorial Day; July 4th; Friday before Labor Day; Labor Day; Columbus Day; & Thanksgiving Day

---

PLUM0455B 05/01/2001

	Rates	Fringes
DAKOTA, RAMSEY & WASHINGTON COUNTIES		
PIPEFITTERS & STEAMFITTERS	29.10	10.10

PLUM0539A 05/01/2001

	Rates	Fringes
ANOKA, CARVER, HENNEPIN, SCOTT & SHERBURNE (East of a line running North-Easterly from point of Wright Co. lies furthest North to that point of Mille Lacs that is South by West) COUNTIES		
PIPEFITTERS (Commercial Building)	29.77	9.51

PLUM0539D 05/01/2001

	Rates	Fringes
ANOKA, BENTON, CARVER, HENNEPIN, SCOTT, SHERBURNE & STEARNS COUNTIES		
PIPEFITTERS & STEAMFITTERS (Residential Construction)	22.23	5.39

---

* PLUM0539H 05/01/2001

	Rates	Fringes
SHERBURNE (West of a line running North-Easterly from point of Wright Co. lies furthest North to point of Mille Lacs that is South by West) COUNTY:		
PIPEFITTERS (Commercial Building)	23.72	11.83

PLUM0589A 06/01/2001

	Rates	Fringes
COOK (Except a strip 20 miles inland along the shores of Lake Superior), ITASCA, LAKE (Except a strip 20 miles inland along the shores of Lake Superior) & ST. LOUIS (North of an East-West line drawn through Cotton) COUNTIES		
PIPEFITTERS; PLUMBERS; & STEAMFITTERS	23.62	11.42
KOOCHICHING COUNTY:		
PIPEFITTERS; PLUMBERS; & STEAMFITTERS	24.09	11.42

ROOF0096C 07/01/2000

	Rates	Fringes
CARLTON, COOK, LAKE & ST. LOUIS (South of Hwy 16, excluding city of Forbes) COUNTIES:		
ROOFERS	22.20	7.15

ROOF0096E 05/01/2001

	Rates	Fringes
ANOKA, CARVER, DAKOTA, HENNEPIN, RAMSEY, SCOTT & WASHINGTON COUNTIES:		
ROOFERS	26.04	8.00+a

FOOTNOTE:

a. 1 Paid Holiday: Labor Day

ROOF0096M 06/01/2001

	Rates	Fringes
BENTON, SHERBURNE & STEARNS COUNTIES:		
ROOFERS	22.95	5.80

ROOF0096N 05/01/2001

	Rates	Fringes
ITASCA, KOOCHICHING & ST. LOUIS (Northern two-thirds) COUNTIES		
ROOFERS	19.05	5.45

SFMN0669A 04/01/2001

	Rates	Fringes
BENTON, CARLTON, CARVER, COOK, ITASCA, KOOCHICHING, LAKE, SHERBURNE, ST. LOUIS & STEARNS COUNTIES:		
SPRINKLER FITTERS:		
Commercial Building	26.36	8.00
Residential	19.77	1.79

SHEE0010B 08/01/2001

	Rates	Fringes
CARLTON, COOK, LAKE & ST. LOUIS (Southern one-third) COUNTIES		
SHEET METAL WORKERS:		
Commercial Building	24.89	10.85
Residential	19.87	5.14

SHEE0010C 05/01/2001

	Rates	Fringes
ITASCA, KOOCHICHING & ST. LOUIS (Northern two-thirds) COUNTIES		
SHEET METAL WORKERS:		
Commercial Building	24.83	9.57
Residential	16.82	9.35

SHEE0010D 05/01/2001

	Rates	Fringes
ANOKA, CARVER, DAKOTA, HENNEPIN, RAMSEY, SCOTT & WASHINGTON COUNTIES:		
SHEET METAL WORKERS:		
Commercial Building	28.26	10.68+a
Residential	20.88	6.24+a

FOOTNOTE:
a. 1 Paid Holiday: Labor Day

SHEE0010N 05/01/2001

	Rates	Fringes
BENTON, SHERBURNE & STEARNS COUNTIES		
SHEET METAL WORKERS:		
Commercial Building	24.91	9.79
Residential	15.45	8.94

TEAM0160B 05/01/2000

	Rates	Fringes
TRUCK DRIVERS (Site Preparation, Excavation & Incidental Paving):		
ANOKA, CARVER, COOK, DAKOTA, HENNEPIN, LAKE, RAMSEY, ST. LOUIS, SCOTT, SHERBURNE & WASHINGTON COUNTIES:		
GROUP 1	19.80	5.70
GROUP 2	19.25	5.70
GROUP 3	19.15	5.70
GROUP 4	18.90	5.70
BENTON, ITASCA (W. of T.H. #6), KOOCHICHING & STEARNS COUNTIES:		
GROUP 1	16.32	5.70
GROUP 2	15.81	5.70
GROUP 3	15.66	5.70
GROUP 4	15.66	5.70
CARLTON & ITASCA (E. of T.H. #6) COUNTIES:		
GROUP 1	18.85	5.70
GROUP 2	18.30	5.70
GROUP 3	18.20	5.70
GROUP 4	17.95	5.70

TRUCK DRIVER CLASSIFICATIONS

GROUP 1 - Boom; Mechanic; Off-Road, including Articulated Dump Truck; Tractor Trailer; Truck Driver (Operation of Hand & Power Operated Winch); & Winches
GROUP 2 - Tri Axles (Including Four Axles)
GROUP 3 - Bituminous Distributor; Bituminous Distributor (One man operation); Tandem Axles & Single Axles
GROUP 4 - Bituminous Distributor Spray Operator (Rear End

Oiler); Dumpman; Pilot Car; Self-propelled Packer; Slurry Operator; Tank Truck Tender (Gas, Oil, Road Oil & Water); Tractor Operator (Wheel type used for any purpose)

THE FOLLOWING CLASSIFICATIONS SHALL COME UNDER THE APPROPRIATE AXLE RATE WAGE GROUP:
"A" Frame; Dry Batch Hauler; Ready-Mix Concrete; Slurry; Tank (Gas, Oil, Road Oil & Water)

TEAM0221A 05/30/1998

	Rates	Fringes
LANDSCAPE - SOD, TREES, SHRUBS & BLACK DIRT:		
Single Axles & Farm Tractors	12.15	4.00
Tandem Axles	12.30	4.00
Truck-Train Combination	12.45	4.00

TEAM0346A 05/01/1998

	Rates	Fringes
ANOKA, CARLTON, CARVER, COOK, DAKOTA, HENNEPIN, ITASCA (East of T.H. #6), LAKE, RAMSEY, ST. LOUIS, SCOTT, SHERBURNE & WASHINGTON COUNTIES:		
TRUCK DRIVERS (Building & Residential Construction:		
GROUP 1 - Boom Truck Operator	19.55	4.50
GROUP 2 - Ready-Mix; Tractor-Trailer	19.00	4.50
GROUP 3 - Mechanic; Fork Lift Operator; & Tandem or 3 Axles	18.90	4.50
GROUP 4 - Farm Tractor; Single or 2 Axles; & Dumps	18.65	4.50

TEAM0563A 05/01/1999

	Rates	Fringes
BENTON & STEARNS COUNTIES:		
TRUCK DRIVERS (Building & Residential Construction):		
Total Construction Projects of Over $950,000.00	15.59	
Total Construction Projects Under $950,000.00	13.84	

TEAM1097A 05/01/1999

	Rates	Fringes
ITASCA (W. of T.H. #6) & KOOCHICHING COUNTIES:		
TRUCK DRIVERS:		
Building	17.84	
Residential	15.16	

WELDERS - Receive rate prescribed for craft performing operation to which welding is incidental.

==========

Unlisted classifications needed for work not included within the scope of the classifications listed may be added after award only as provided in the labor standards contract clauses (29 CFR 5.5(a)(1)(v)).

In the listing above, the "SU" designation means that rates listed under that identifier do not reflect collectively bargained wage and fringe benefit rates. Other designations indicate unions whose rates have been determined to be prevailing.

WAGE DETERMINATION APPEALS PROCESS

1.) Has there been an initial decision in the matter? This can be:

* an existing published wage determination
* a survey underlying a wage determination
* a Wage and Hour Division letter setting forth a position on a wage determination matter
* a conformance (additional classification and rate) ruling

On survey related matters, initial contact, including requests for summaries of surveys, should be with the Wage and Hour Regional Office for the area in which the survey was conducted because those Regional Offices have responsibility for the Davis-Bacon survey program. If the response from this initial contact is not satisfactory, then the process described in 2.) and 3.) should be followed.

With regard to any other matter not yet ripe for the formal process described here, initial contact should be with the Branch of Construction Wage Determinations. Write to:

Branch of Construction Wage Determinations
Wage and Hour Division
U. S. Department of Labor
200 Constitution Avenue, N. W.
Washington, D. C. 20210

2.) If the answer to the question in 1.) is yes, then an interested party (those affected by the action) can request review and reconsideration from the Wage and Hour Administrator (See 29 CFR Part 1.8 and 29 CFR Part 7). Write to:

Wage and Hour Administrator
U.S. Department of Labor
200 Constitution Avenue, N. W.
Washington, D. C. 20210

The request should be accompanied by a full statement of the interested party's position and by any information (wage payment data, project description, area practice material, etc.) that the requestor considers relevant to the issue.

3.) If the decision of the Administrator is not favorable, an

interested party may appeal directly to the Administrative Review Board (formerly the Wage Appeals Board). Write to:

Administrative Review Board
U. S. Department of Labor
200 Constitution Avenue, N. W.
Washington, D. C. 20210

4.) All decisions by the Administrative Review Board are final.

END OF GENERAL DECISION

MN010007-26

General Decision Number MN010061
Superseded General Decision No. MN000061

State: Minnesota
Construction Type:

HEAVY
SEWER AND WATER LINE
TREATMENT PLANT

County(ies):

ANOKA	HENNEPIN	SCOTT
BENTON	HOUSTON	SHERBURNE
CARVER	ISANTI	ST LOUIS
CHISAGO	OLMSTED	STEARNS
CLAY	POLK	WASHINGTON
DAKOTA	RAMSEY	WRIGHT

TREATMENT PLANTS, HEAVY, SEWER & WATER LINES

Modification Number	Publication Date
0	03/02/2001
1	04/06/2001
2	05/11/2001
3	06/29/2001
4	07/20/2001
5	08/17/2001
6	10/19/2001

COUNTY(ies):

ANOKA	HENNEPIN	SCOTT
BENTON	HOUSTON	SHERBURNE
CARVER	ISANTI	ST LOUIS
CHISAGO	OLMSTED	STEARNS
CLAY	POLK	WASHINGTON
DAKOTA	RAMSEY	WRIGHT

ASBE0034G 06/01/2001

	Rates	Fringes
ANOKA, BENTON, CARVER, CHISAGO, DAKOTA, HENNEPIN, HOUSTON, ISANTI, OLMSTED, RAMSEY, SCOTT, SHERBURNE, STEARNS, WASHINGTON & WRIGHT COUNTIES		
INSULATOR/ASBESTOS WORKERS (Includes application of all insulating materials, protective coverings, coatings & finishings to all types of mechanical systems)	28.09	11.49

ASBE0049G 06/01/2001

	Rates	Fringes
ST. LOUIS COUNTY:		
ASBESTOS WORKERS/INSULATORS (Includes application of all insulating materials, protective coverings, coatings & finishings to all types		

of mechanical systems)	28.35	7.21

ASBE0133C 07/01/2000

	Rates	Fringes
CLAY & POLK COUNTIES:		
ASBESTOS WORKERS/INSULATORS (Includes application of all insulating materials, protective coverings, coatings & finishings to all types of mechanical systems)	20.58	6.85

ASBE0205K 05/01/1998

	Rates	Fringes
ANOKA, BENTON, CARVER, CHISAGO, DAKOTA, HENNEPIN, HOUSTON, ISANTI, OLMSTED, RAMSEY, SCOTT, SHERBURNE, ST. LOUIS, STEARNS, WASHINGTON & WRIGHT COUNTIES:		
HAZARDOUS MATERIAL HANDLERS (Includes preparation, wetting, stripping, removal, scrapping, vacuuming, bagging & disposing of all insulation materials, whether they contain asbestos or not, from mechanical systems)	18.21	3.30

BOIL0647E 10/01/1999

	Rates	Fringes
BOILERMAKERS	23.35	9.71

BRMN0001Z 05/01/2000

	Rates	Fringes
ANOKA, CARVER, CHISAGO, DAKOTA, HENNEPIN, ISANTI, RAMSEY, SCOTT, SHERBURNE (City of Elk River), WASHINGTON & WRIGHT COUNTIES:		
BRICKLAYERS & STONEMASONS	25.47	8.06

BRMN0003E 05/01/2001

	Rates	Fringes
ST. LOUIS (South of a line between Townships #54 & #55, 2 miles north of Cotton) COUNTY:		
BRICKLAYERS	24.93	9.41

BRMN0003F 06/01/2000

	Rates	Fringes
ST. LOUIS COUNTY (S. of a line between Townships 54 & 55 ((2 miles north of Cotton)):		
MARBLE SETTERS & TILE SETTERS	23.12	3.57

BRMN0007C 05/01/1998

	Rates	Fringes
HOUSTON COUNTY:		
BRICKLAYERS; BLOCKLAYERS; CAULKERS; CLEANERS; POINTERS; & STONEMASONS	19.43	3.80

BRMN0008I 09/01/1998

	Rates	Fringes
OLMSTED COUNTY:		
BRICKLAYERS; CAULKERS; CLEANERS; POINTERS; & STONEMASONS	22.08	3.80

BRMN0008J 10/01/1998

	Rates	Fringes
OLMSTED COUNTY:		
TILE SETTERS	19.70	

BRMN0012C 09/04/2000

	Rates	Fringes
POLK COUNTY:		
BRICKLAYERS	25.03	6.17

BRMN0015H 09/04/2000

	Rates	Fringes
CLAY COUNTY:		
BRICKLAYERS	25.03	6.17

BRMN0015I 09/04/2000

	Rates	Fringes
CLAY COUNTY:		
CEMENT MASONS	24.63	6.17

BRMN0016C 05/01/2000

	Rates	Fringes
ST. LOUIS (North of a line between Townships #54 & #55, 2 miles north of Cotton) COUNTY:		
BRICKLAYERS	23.26	9.23

BRMN1000A 05/01/2000

	Rates	Fringes
BENTON, SHERBURNE (Excluding city of Elk River) & STEARNS COUNTIES:		
BRICKLAYERS; BLOCKLAYERS & STONEMASONS	22.78	8.06

BRMN1000B 05/01/2000

	Rates	Fringes
BENTON COUNTY:		
CEMENT MASONS (Treatment Plants)	22.29	7.96
STEARNS COUNTY:		
CEMENT MASONS & PLASTERERS (Treatment Plants)	22.29	7.96

BRMN1000C 05/01/2001

	Rates	Fringes
ANOKA, BENTON, CARVER, CHISAGO, CLAY, DAKOTA, HENNEPIN, HOUSTON, ISANTI, POLK, RAMSEY, SCOTT, SHERBURNE, ST. LOUIS (Excluding Duluth and south of Township Line 55), STEARNS, WASHINGTON & WRIGHT COUNTIES:		
TILE SETTERS	25.99	8.95

BRMN1000D 05/01/1999

	Rates	Fringes
MARBLE SETTERS' FINISHERS & TILE SETTERS' FINISHERS	20.59	5.95

BRMN1000E 05/01/2000

	Rates	Fringes

ALL COUNTIES, EXCEPT the city of Duluth in ST. LOUIS COUNTY:

MARBLE SETTERS	25.08	7.96

BRMN1000J 05/01/2000

	Rates	Fringes
TERRAZZO WORKERS	26.21	6.85
TERRAZZO BASE MACHINES	24.58	7.96
FLOOR MECHANICS; TERRAZZO WORKERS' FINISHERS	24.25	7.96

CARP0190I 05/01/1997

	Rates	Fringes
ANOKA, BENTON, CARVER, CHISAGO, CLAY, DAKOTA, HENNEPIN, ISANTI, RAMSEY, SCOTT, SHERBURNE, STEARNS, WASHINGTON & WRIGHT COUNTIES:		
LATHERS	22.45	7.04

CARP0190L 06/01/2000

	Rates	Fringes
HOUSTON AND OLMSTED COUNTIES		
LATHERS	24.09	4.04

---

* CARP0361G 05/01/2001

	Rates	Fringes
ST. LOUIS (Alborn, Arnold, Bartlett, Birch, Brookstone, Canyon, Clinton, Culver, Duluth, Floodwood, Gowan, Island, Kelsey, Lakewood, Meadowlands, Munger, Palmers, Payne, Prasit, Shaw & Taft) COUNTY:		
CARPENTERS (Treatment Plants)	20.54	9.91

---

* CARP0361J 05/01/2001

	Rates	Fringes
POLK & ST. LOUIS COUNTIES		
LATHERS	20.82	9.91

---

* CARP0361M 05/01/2001

	Rates	Fringes
ST. LOUIS (Alborn, Arnold, Bartlett, Birch, Brookstone, Canyon, Clinton, Culver, Duluth, Floodwood, Gowan, Island, Kelsey, Lakewood, Meadowlands, Munger, Palmers, Payne, Prasit, Shaw & Taft) COUNTY:		
SOFT FLOOR LAYERS	19.73	9.91

CARP0548F 05/01/2000

	Rates	Fringes
ANOKA, BENTON, CARVER, CHISAGO, CLAY (Moorhead & up to 5 miles radius), DAKOTA, HENNEPIN, HOUSTON, ISANTI, OLMSTED, POLK (East Grand Forks & up to 5 miles radius), RAMSEY, SCOTT, SHERBURNE, STEARNS, WASHINGTON & WRIGHT COUNTIES:		
MILLWRIGHTS (Treatment Plants)	26.24	7.58

CARP0596D 06/01/1999

	Rates	Fringes
ANOKA, CARVER, CHISAGO, DAKOTA, HENNEPIN, ISANTI, RAMSEY, SCOTT, SHERBURNE (E. of Hwy #169, inclu. Zimmerman, Big Lake & Elk River), WASHINGTON & WRIGHT (S. of Hwy #12, inclu. Cokato, Buffalo & Monticello) COUNTIES:		
SOFT FLOOR LAYERS	21.73	8.32

CARP0596I 05/01/1997

	Rates	Fringes
TERRAZZO WORKERS FINISHERS	22.69	5.47

CARP0606G 05/01/2000

	Rates	Fringes
ST. LOUIS COUNTY (Excluding Alborn, Arnold, Bartlett, Birch, Brookstone, Canyon, Clinton, Culver, Duluth, Floodwood, Gowan, Island, Kelsey, Lakewood, Meadowlands, Munger, Palmers, Payne, Prasit, Shaw & Taft):		
CARPENTERS; PILEDRIVERMEN & SOFT FLOOR LAYERS (Treatment Plants)	18.44	9.02

CARP0606I 05/01/2000

	Rates	Fringes
POLK COUNTY (Excluding East Grand Forks and an area 5 miles outside city limits):		
CARPENTERS & PILEDRIVERMEN (Treatment Plants)	15.53	6.87

CARP0930F 05/01/1998

	Rates	Fringes
CLAY COUNTY (Except Moorhead):		
CARPENTERS (Treatment Plants)	10.86	4.70

CARP1176B 06/01/1998

	Rates	Fringes
CLAY COUNTY (City of Moorhead & a radius of 5 miles NE & South of the city limits) & POLK COUNTY (East Grand Forks & an area 5 miles outside city limits):		
CARPENTERS (Treatment Plants - Does not include Acoustical or Drywall Mechanics)	16.75	3.05
PILEDRIVERMEN (Treatment Plants)	18.75	3.05

CARP1348C 05/01/2000

	Rates	Fringes
CLAY (Excluding Moorhead & up to 5 miles radius), POLK (Excluding East Grand Forks & up to 5 miles radius) & ST. LOUIS COUNTIES:		
MILLWRIGHTS (Treatment Plants)	21.66	10.29

CARP1382D 06/01/2001

	Rates	Fringes
HOUSTON COUNTY:		
CARPENTERS & PILEDRIVERMEN (Treatment Plants)	18.52	6.03
OLMSTED COUNTY:		
CARPENTERS & PILEDRIVERMEN (Treatment Plants)	22.78	6.03

CARP9900M 05/01/2001

	Rates	Fringes
ANOKA, CARVER, CHISAGO, DAKOTA, HENNEPIN, ISANTI, RAMSEY, SCOTT, SHERBURNE (Excluding St. Cloud & extending 5 miles beyond the city limits of St. Cloud), WASHINGTON & WRIGHT COUNTIES:		
CARPENTERS; INSULATORS; &		

PILEDRIVERMEN (Treatment Plants)	27.06	7.63

CARP9900N 05/01/2000

	Rates	Fringes
CARPENTERS & PILEDRIVERMEN (Heavy, Sewer & Water Lines):		
AREA 1	22.77	8.50
AREA 2	20.29	7.53
AREA 3	17.22	9.02
AREA 4	19.84	7.53
AREA 5	21.05	9.02
AREA 6	21.09	8.98
AREA 7	21.49	8.98

AREA 1 - ANOKA, CARVER, CHISAGO, DAKOTA, HENNEPIN, ISANTI, RAMSEY, SCOTT, SHERBURNE (South of the northern boundary of T. 33-N and east of the western boundary of R. 27-W), WASHINGTON & WRIGHT (East of & Including Minnesota Highway #25) COUNTIES

AREA 2 - BENTON, SHERBURNE (NW three-fourths, Including Clear Lake & Becker), STEARNS & WRIGHT (NW Part, including South Haven & Maple Lake) COUNTIES

AREA 3 - CLAY & POLK COUNTIES

AREA 4 - HOUSTON & OLMSTED COUNTIES

AREA 5 - ST. LOUIS COUNTY (Northeast two-thirds, Including Cook, Cusson & Ely & Western Strip, Including Chisholm, Orr & Greaney)

AREA 6 - ST. LOUIS COUNTY (Southern one-third, Including Fond Du Lac, Floodwood, Cotton & Proctor)

AREA 7 - ST. LOUIS COUNTY (Duluth)

CARP9900Q 05/01/2001

	Rates	Fringes
BENTON, SHERBURNE (Extreme NW portion, Including St. Cloud & extending 5 miles beyond the city limits of St. Cloud) & STEARNS COUNTIES:		
CARPENTERS & PILEDRIVERMEN (Treatment Plants)	19.91	6.63

ELEC0110K 05/01/2001

	Rates	Fringes
ANOKA (Except Anoka & Fridley Townships & the cities of Andover, Anoka, Columbia Heights, Coon Rapids, Fridley, Hilltop, Ramsey & Spring Lake Park), CHISAGO, DAKOTA, ISANTI, RAMSEY, SHERBURNE (East of Becker & Santiago Townships) & WASHINGTON COUNTIES:		
ELECTRICIANS	28.28	13.19
CABLE SPLICERS	29.28	13.47

ELEC0110L 03/01/1998

	Rates	Fringes
SOUND, SIGNAL & COMMUNICATIONS WORK:		
Technician (Installation of Controller Only)	19.22	.58+a+b
Installer (Excluding Controller Work)	11.31	.34+a+b

FOOTNOTES:

a. 1 year's service - 5 days' paid vacation; 2 years' service - 10 days' paid vacation; 5 years' service - 12 days' paid vacation; 7 years' service - 14 days' paid vacation; 9 years'

service - 16 days' paid vacation; 11 years' service - 18 days' paid vacation; 12 years' service - 20 days' paid vacation
b. 8 Paid Holidays: New Year's Day; Memorial Day; 4th of July; Labor Day; Thanksgiving Day; Day After Thanksgiving; the normal work day preceding Christmas Day; & Christmas Day

---

ELEC0160D 04/01/2001

	Rates	Fringes
LINE CONSTRUCTION:		
Lineman; Cable Splicer; Dynamiter; Special Equipment Operator; & Technician	26.71	9.51
Equipment Operator	22.97	8.47
Groundman/Truck Driver; & Pole Treating Truck Driver	18.70	7.29
LINE CLEARANCE:		
Tree Trimmer; Tractor Operator	18.44	7.22
Groundman/Truck Driver	12.91	5.68
Groundman	11.99	5.43

ELEC0242G 06/01/2001

	Rates	Fringes
ST. LOUIS COUNTY (South part bounded on the north by the north line of Kelsey Township extended east & west):		
ELECTRICIANS	28.87	9.53

ELEC0292F 05/01/2000

	Rates	Fringes
AREA 1: ANOKA (Andover, Anoka, Columbia Heights, Coon Rapids, Fridley, Hilltop, Ramsey, Spring Lake Park), BENTON AND SHERBURNE COUNTIES (East of Hwy 25 to Hwy 10 and an imaginary line straight West to the Missippi River), CARVER, HENNEPIN, SCOTT, AND WRIGHT COUNTIES		
ELECTRICIANS:		
Electricians	27.50	12.18
Cable Splicers	28.50	12.62
AREA 2: BENTON AND SHERBURNE COUNTIES (West of Hwy 25 to Hwy 10 and an imaginary line straight West to the Mississippi River), AND STEARNS COUNTY		
ELECTRICAL CONTRACTS OVER $300,000:		
Electricians	23.80	10.97
Cable Splicers	24.80	11.43
ELECTRICAL CONTRACTS UNDER $300,000:		
Electricians	20.92	9.64
Cable Splicers	21.92	10.11

ELEC0294I 06/01/2001

	Rates	Fringes
ST. LOUIS COUNTY (North part bounded on the south by the south line of Ellsburg Township, extended east & west)		
ELECTRICIANS	25.80	10.45
CABLE SPLICERS	26.35	10.67

ELEC0343N 05/31/1999

	Rates	Fringes
OLMSTED COUNTY (City of Rochester & 10 mile radius):		

Electricians	22.99	9.12
Cable Splicers	23.99	9.26

HOUSTON & OLMSTED (Excluding City of Rochester & 10 mile radius) COUNTIES:

ELECTRICAL INSTALLATIONS OVER $300,000.00:		
Electricians	22.99	9.12
Cable Splicers	23.99	9.26
ELECTRICAL INSTALLATIONS UNDER $300,000.00:		
Electricians	20.24	8.75
Cable Splicers	21.24	8.89

ELEC1426J 06/01/1998

	Rates	Fringes
CLAY & POLK COUNTIES:		
ELECTRICIANS:		
Electricians	14.70	4.64
Cable Splicers	15.45	4.73

ENGI0049Y 05/01/2001

	Rates	Fringes
POWER EQUIPMENT OPERATORS (Treatment Plants):		
GROUP 1	28.99	7.55
GROUP 2	28.65	7.55
GROUP 3	27.24	7.55
GROUP 4	26.90	7.55
GROUP 5	26.73	7.55
GROUP 6	25.22	7.55
GROUP 7	24.10	7.55
GROUP 8	22.09	7.55

POWER EQUIPMENT OPERATOR CLASSIFICATIONS

GROUP 1 - Helicopter Operator; Truck & Crawler Crane with 200' of Boom & Over, including Jib ($.50 premium with 300' of Boom & over, including jib); & Tower Crane 250' & Over

GROUP 2 - Truck & Crawler Crane with 150' of Boom, up to but not including 200' of Boom, including Jib; & Tower Crane 200' & Over, Concrete Pump 164 ft Boom.

GROUP 3 - Traveling Tower Crane; Master Mechanic; Pile Driving Operator (when 3 drums are used); Truck & Crawler Crane, up to but not including 150' of Boom, including Jib; Derrick (Guy & Stiffleg); Tower Crane (Stationary) up to 200'; & All Terrain Vehicle Crane, Boom Truck over 100 ft.

GROUP 4 - Crawler Backhoe; Hoist Engineer (3 drums or more); Locomotive Operator; Overhead Crane Operator (inside building perimeter); & Tractor Operator with Boom

GROUP 5 - Air Compressor Operator 450 CFM or Over (2 or more machines); Pump Operator and/or Conveyor Operator (2 or more machines); Mechanic; Pumpcrete or Complaco type Machine Operator; Forklift; Boom Truck up to 100 ft; Concrete Mixer Operator; Drill Rig - Heavy Rotary or Churn when used for Caisson Drilling for Elevator Cylinder or Building Construction; Front End Loader (Over 1 cu. yd.); Hoist Engineer (1 or 2 drums); Straddle Carrier Operator; Power Plant Engineer (100 KW & over on multiples equal to 100KW & over); Tractor Operator over D2; & Well Point Pump Op.

GROUP 6 - Concrete Batch Plant Operator; Gunite Operator; Tractor Operator D2 or similar size; & Front End Loader Operator, up to 1 cu. yd.

GROUP 7 - Air Compressor Operator 600 CFM or Over; Pump and/or Conveyor Operator; Brakeman; Pick-up Sweeper (1 cu. yd. & over Hopper capacity); Truck Crane Oiler; & Welding Machine Operator, Fireman temporary heat.
GROUP 8 - Mechanical Space Heater (Temporary Heat); Oiler or Greaser; & Elevator Operator

---

ENGI0049Z 05/01/2001

	Rates	Fringes
POWER EQUIPMENT OPERATORS (Heavy, Sewer & Water Lines):		
ANOKA, CARVER, CHISAGO (S. of the northern boundary of T. 34-N & that part consisting substantially of the cities of Thomson, Cloquet, Scanlon & Carlton), DAKOTA, HENNEPIN, RAMSEY, SCOTT, SHERBURNE (S. of the northern boundary of T. 33-N & E. of the western boundary of R. 27-W), ST. LOUIS, WASHINGTON & WRIGHT (E. of & inclu. Hwy #25) COUNTIES:		
GROUP 1	25.57	7.55
GROUP 2	25.02	7.55
GROUP 3	24.84	7.55
GROUP 4	24.72	7.55
GROUP 5	21.68	7.55
GROUP 6	20.47	7.55
BENTON (E. of the western right-of-way of U.S. Hwy #10), CHISAGO (Exclu. area S. of the northern boundary of T. 34-N), HOUSTON, ISANTI, OLMSTED, SHERBURNE (Excluding area S. of the northern boundary of T. 33-N and E. of the western boundary of R. 27-W), STEARNS (E. of the western right-of-way of Minn. Hwy #15) & WRIGHT (Exclu. area E. of Hwy #25) COUNTIES:		
GROUP 1	23.61	7.55
GROUP 2	23.16	7.55
GROUP 3	22.99	7.55
GROUP 4	22.86	7.55
GROUP 5	20.29	7.55
GROUP 6	19.42	7.55
BENTON (Excluding E. of the western right-of-way of U.S. Hwy #10), CLAY, POLK & STEARNS (Excluding area E. of the Western right-of-way of Minn. Hwy #15) COUNTIES:		
GROUP 1	21.45	7.55
GROUP 2	20.52	7.55
GROUP 3	20.32	7.55
GROUP 4	20.21	7.55
GROUP 5	18.50	7.55
GROUP 6	17.90	7.55

POWER EQUIPMENT OPERATOR CLASSIFICATIONS

GROUP 1 - Helicopter Pilot; *Crane with over 135' Boom, excluding Jib; Dragline, Crawler, Hydraulic Backhoe and/or other similar equipment with Shovel-type Controls 3 cu. yds. & over Mfg. rated Cap.; & Pile Driving when 3 Drums are in use

GROUP 2 - Cableway; Concrete Mixer, Stationary Plant over 34E; Derrick (Guy or Stiffleg) (Power) (Skids or Stationary); Diver Dragline, Crawler, Hydraulic Backhoe and/or similar equipment with Shovel-type Controls, up to 3 cu. yds. Mfg. rated cap.; Dredge or Engineers, Dredge (Power) & Engineer; Front End Loader, 5 cu. yds. & over; Grader or Motor Patrol, Finishing Earthwork & Bituminous; Locomotive Crane; Master Mechanic; Mixer (Paving) Concrete Paving, Road; Mole, including Power Supply; Mucking Machine, including Mucking Operations, Conway

or similar type; Piledriving; Refrigeration Plant Engineer; Tandem Scraper; Tractor - Boom type; Truck Crane - Crawler Crane; & Tugboat 100 HP & over

GROUP 3 - Dual Tractor; Elevating Grader; Pumpcrete; Scraper - Struck Cap. 32 cu. yds. & over; & Self-propelled Traveling Soil Stabilizer

GROUP 4 - Air Track Rock Drill; Articulated Hauler Terex, Caterpillar or similar type; Asphalt Bituminous Stabilizer Plant; Automatic Road Machine (CMI or similar); Backfiller; Bituminous Roller (8 Tons & over); Bituminous Spreader & Finishing (Power); Boom Truck (Power operated Boom); Brokk or R.T.C. 750 Remote Control or Similar types with all attachments; Cat & Scraper; Cat Tractor with Rock Wagons or similar types; Challenger 75-D or 85-D when pulling Scraper or Bulldozer; Chip Harvester & Tree Cutter over 150 HP; Concrete Batch Plant; Concrete Mixer on jobsite over 14S; Concrete Mobile; Crushing Plant (Gravel & Stone) or Gravel Washing, Crushing & Screening Plant; Curb Machine; Directional Boring Machine; Dope Machine (Pipeline); Drill Rigs, Heavy Rotary or Churn or Cable Drill; Fork Lift or Straddle Carrier; Fork Lift or Lumber Stacker; Front End Loader, over 1 cu. yd.; Hoist Engineer (Power); Hydraulic Tree Planter; Launcherman (Tankerman or Pilot License); Lead Greaser; Locomotive; Mechanic; Milling, Grinding & Planing Machine; Morbark Tub Grinder or Similar Type; Multiple Machines, such as Air Compressors, Welding Machines, Generators, Pumps; Pavement Breaker or Tamping Machine (Power Driven) Mighty Mite or similar type; Pickup Sweeper, 1 cu. yd. & over Hopper Cap.; Pipeline Wrapping, Cleaning or Bending Machine; Power Plant Engineer, 100 K.W.H. & over; Power Actuated Horizontal Boring Machine, over 6"; Pugmill; Rubber- tired Farm Tractor, Backhoe Attach.; Scraper, up to 32 cu. yds.; Skid Steer Loader, over 1 cu. yd. with Backhoe Attachment; Slip Form (Power Driven) (Paving); Tie Tamper & Ballast Machine; Tractor, Bulldozer; Tractor Operator, over 50 HP with Power Take-off; Trenching Machine (Sewer, Water, Gas); Well Point Installation; & Dismantling or Repair Mechanic

GROUP 5 - Air Compressor, 600 CFM or over; Bituminous Roller (Under 8 tons); Bituminous Rubber-tired Roller; Bituminous Spreader & Bituminous Finishing Machine Tender (Power); Concrete Distributor & Spreader Finishing Machine, Longitudinal Float, Joint Machine, & Spray; Concrete Saw (Multiple Blade) (Power Operated); Form Trench Digger (Power); Front End Loader, up to & incl. 1 cu. yd.; Grader (Motor Patrol); Gunite Gunall; Hydraulic Log Splitter; Loader (Barber Greene or similar type); Payhauler or similar type; Post Hole Driving Machine/Post Hole Augar; Power Actuated Auger & Boring Machine; Power Actuated Jack; Pump; Self-propelled Chip Spreader (Flaherty or similar); Sheep Foot Compactor with Blade - 200 HP & over; Shouldering Machine (Power) Apsco or similar type inclu. self-propelled Sand & Chip Spreader; Stump Chipper & Tree Chipper; Tractor Operator, Bulldozer, 50 HP or less; & Tree Farmer (Machine)

GROUP 6 - Challenger 75-D or 85-D when pulling Disk or Roller; Conveyor; Dredge Deck Hand; Fireman or Tank Car Heater; Gravel Screening Plant (Portable not Crushing or Washing); Greaser (Truck or Tractor); Leverman; Mechanic tender; Mechanic, Space Heater (Temporary Heat); Oiler (Power Shovel, Crane, Dragline);

Power Sweeper; Roller on Gravel Compaction; Self-propelled
Vibrating Packer (35 HP & over); Sheep Foot Roller; Tractor,
Wheel Type (over 50 HP); & Truck Crane Oiler
*CRANE OVER 135' BOOM, EXCLUDING JIB - $ .25 PREMIUM;
CRANE OVER 200' BOOM, EXCLUDING JIB - $ .50 PREMIUM
UNDERGROUND WORK:
TUNNELS, SHAFTS, ETC. - $ .25 PREMIUM
UNDER AIR PRESSURE - $ .50 PREMIUM
HAZARDOUS WASTE PROJECTS (PPE Required):
LEVEL A - $1.25 PREMIUM
LEVEL B - $ .90 PREMIUM
LEVEL C - $ .60 PREMIUM

IRON0512M 07/01/2001

	Rates	Fringes
ANOKA, BENTON, CARVER, CHISAGO, DAKOTA, HENNEPIN, HOUSTON, ISANTI, OLMSTED, RAMSEY, SCOTT, SHERBURNE, STEARNS, WASHINGTON & WRIGHT COUNTIES		
IRONWORKERS	28.45	10.79

IRON0563L 05/01/2001

	Rates	Fringes
ST. LOUIS COUNTY:		
IRONWORKERS	23.13	11.85

IRON0793F 05/01/2001

	Rates	Fringes
CLAY & POLK COUNTIES:		
IRONWORKERS	18.80	8.82

LABO0010J 05/01/2000

	Rates	Fringes
LANDSCAPERS: Seeding, Sodding & Planting of evergreen & deciduous shrubs & trees	12.38	4.36

LABO0132I 01/01/2000

	Rates	Fringes
ANOKA, BENTON, CARVER, CHISAGO, CLAY, DAKOTA, HENNEPIN, HOUSTON, ISANTI, OLMSTED, RAMSEY, SCOTT, SHERBURNE, STEARNS, WASHINGTON & WRIGHT COUNTIES:		
LABORERS, Asbestos Abatement	19.16	6.62

---

* LABO0132M 05/14/2001

	Rates	Fringes
ANOKA, CARVER, CHISAGO, DAKOTA, HENNEPIN, ISANTI, RAMSEY, SCOTT, SHERBURNE, WASHINGTON & WRIGHT COUNTIES		
LABORERS (Treatment Plants):		
GROUP 1	24.48	5.70
GROUP 2	23.98	5.70
GROUP 3	25.48	5.70
FLAGPERSON	21.85	5.70

LABORERS CLASSIFICATIONS

GROUP 1 - Construction; Carpenter Tender; Concrete; Damp Proofer Below Grade; Drill Runner Tender; Dumpman - Dirt, Asphalt, Concrete, Cement; Heater Tender; Hot Tar Caulker - Corker; Joist Handler; Material Handler - Power Buggy; Rebar; Snow Blower

Operator; Signal Person; Asbestos and Hazardous Waste Technician; Hydro Blast or Waterblast; Chain Saw Operator; Concrete Saw, Drill Operator; Concrete Vibrator; Demolition & Remodeling, Excluding Demolition of an entire Structural System; Mason Tender; Mortar Mixer - Cement or any other substitute Material or Composition; Pipe Handler; Pneumatic & Electric Tool, Jackhammer, Paving Buster, Chipping Hammer, Tamper Operator, etc.; Swing Stage Line Scaffold (Not including Patent" Scaffolding); Torchman - Gas, Electric, Thermal or similar device; & Remote Control Tamper

GROUP 2 - Caisson Work; Mounted Wall Saw Operator; Nozzle Operator - Gunite, Cement, Sandblasting; Pipelayer; Pipe Rehab Technical, including Cleaning, Cutting, Cameraing, etc.; Refractory Worker; Sheeting Setter & Driver, Heavy Building Excavation; Underground Work - Open Ditch or Excavation 8' Below Grade; & Underpinning

GROUP 3 - Driller for Blasting purposes; Dynamite Blaster or substitute products Tovex TR, Water, Gas, Gel, Bristar, Silent Dynamite, etc.

LABO0132P 06/01/1999

	Rates	Fringes
ANOKA, CARVER, CHISAGO, DAKOTA, HENNEPIN, ISANTI, RAMSEY, SCOTT, SHERBURNE, WASHINGTON & WRIGHT COUNTIES:		
PLASTER TENDERS (Treatment Plants)	23.85	5.59

LABO0405D 05/01/1999

	Rates	Fringes
HOUSTON COUNTY:		
LABORERS (Treatment Plants):		
GROUP 1	15.49	4.89
GROUP 2	16.19	4.89
FLAGPERSON	13.66	4.89
OLMSTED COUNTY:		
LABORERS (Treatment Plants):		
GROUP 1	16.94	4.89
GROUP 2	17.64	4.89
FLAGPERSON	15.06	4.89

LABORER CLASSIFICATIONS

GROUP 1 - Construction; General; Carpenter Tender; Concrete; Damp Proofer Below Grade; Dumpman - Dirt, Asphalt, Concrete, Cement; Heater Tender; Hot Tar Caulker - Corker; Firewatch; Joist Handler; Material Handler - Power Buggy; Rebar; Signalperson; Snow Blower Operator; Demolition & Wrecking, Including Remodeling; Chain Saw Operator; Concrete Saw, Drill Operator; Concrete Vibrator; Pipe Handler; Pneumatic & Electric Tool, Jackhammer, Paving Buster, Chipping Hammer, Tamper Operator, etc.; Swing Stage Line Scaffold (not including "Patent" Scaffolding); & Remote Control Tamper

GROUP 2 - Pipe Rehab Technician, including Cleaning, Cutting, Cameraing, etc.; Caisson Work; Nozzle Operator - Gunite, Cement, Sandblasting; Pipelayer; Refractory Worker; Sheeting Setter & Driver, Heavy Building Excavation; Underground Work - Open Ditch or Excavation 8' Below Grade; Underpinning; Mason Tender; Mortar Mixer - Cement or any other substitute Material or Composition; Driller for Blasting Purposes; Dynamite Blaster or substitute products Tovex TR, Water, Gas, Gel, Bristar,

Silent Dynamite, etc.

LABO0563C 05/01/1999

	Rates	Fringes
BENTON, CLAY (Except City limits of Moorhead) & STEARNS COUNTIES:		
LABORERS (Treatment Plants):		
Total Construction Projects of Over $950,000.00:		
GROUP 1	15.59	6.30
GROUP 2	15.81	6.30
GROUP 3	15.86	6.30
GROUP 4 - FLAGPERSON	13.68	6.30
Total Construction Projects Under $950,000.00:		
GROUP 1	13.84	6.30
GROUP 2	14.06	6.30
GROUP 3	14.11	6.30
GROUP 4 - FLAGPERSON	12.11	6.30

LABORER CLASSIFICATIONS

GROUP 1 - Construction; Asbestos & Hazardous Waste Technician; Carpenter Tender; Chain Saw Operator; Concrete Saw, Drill Operator; Concrete Vibrator; Concrete; Damp Proofer Below Grade; Demolition & Remodeling, Excluding Demolition of an entire Structural System; Drill Runner Tender; Dump Person - Dirt, Asphalt, Concrete, Cement; Heater Tender; Hot Tar Caulker - Corker; Hydro Blast or Waterblaster; Joist Handler; Mason Tender; Material Handler - Power Buggy; Mortar Mixer - Cement or any other Substitute material or Composition; Pipe Handler; Pneumatic & Electric Tools, Jackhammer, Paving Buster, Chipping Hammer, Tamper Operator, etc.; Rebar; Remote Control Tamper; Signal Person; Snow Blower Operator; Swing Stage Line Scaffold (Not including "Patent" Scaffolding); Torchperson - Gas, Electric, Thermal or similar device

GROUP 2 - Caisson Work; Mounted Wall Saw Operator; Nozzle Operator - Gunite, Cement, Sandblasting; Pipelayer; Pipe Rehab Technician (Including Cleaning, Cutting, Cameraing, etc.); Refractory Worker; Sheeting Setter & Driver, Heavy Building Excavation; Underground Work - Open Ditch or Excavation 8' Below Grade; & Underpinning

GROUP 3 - Driller for Blasting Purposes; Dynamite Blaster or substitute products Tovel TR, Water, Gas, Gel, Bristar, Silent Dynamite, etc.

LABO0580B 04/19/1999

	Rates	Fringes
CLAY (Moorhead) & POLK (East Grand Forks) COUNTIES:		
LABORERS (Treatment Plants)	14.05	4.34

LABORER CLASSIFICATIONS

Common; Concrete Bucket; Power Tool Operator; Mortar Mixer; Brick & Plasterers' Tender; Jackhammer Work; Hod Carrier; Non-Metallic Pipe Layer; Gas Line Wrapping or Taping; Cutting Torch for Demolition; Sandblaster & Gunnite Pot Tender; & Hose Tender

---

LABO1091B 05/01/1998

	Rates	Fringes
ST. LOUIS COUNTY (South of T 55 N):		
LABORERS (Treatment Plants):		
GROUP 1	15.95	5.39

GROUP 2	16.10	5.39
GROUP 3	16.35	5.39
GROUP 4	16.65	5.39
FLAGPERSON	14.05	5.39

LABORER CLASSIFICATIONS

GROUP 1 - General; Carpenter Tender; Concrete Laborer; Damp Proofer Below Grade; Drill Runner Tender; Dumpman - Dirt, Asphalt, Concrete, Cement; Heater Tender; Hot Tar Caulker - Corker; Joist Handler; Rebar; Snow Blower Operator; Signalperson; Material Handler (All types Power Buggy); Fire Control; Asbestos Removal; & Hazardous Waste

GROUP 2 - Chain Saw Operator; Concrete Saw, Drill Operator; Concrete Vibrator; Demolition & Wrecking, Excluding Remodeling; Gunite, Sandblasting Machine Operator; Mason Tender; Mortar Mixer - Cement or any other substitute material or composition; Pipe Handler; Pneumatic & Electric Tools, Jackhammer, Paving Buster, Chipping Hammer, Tamper Operator, etc.; Swing Stage Line Scaffold (not including "patent" scaffolding); Torchman - Gas, Electric, Thermal or similar device; & Hydroblast

GROUP 3 - Caisson Work; Nozzle Operator - Gunite, Cement, Sandblasting; Pipelayer; Refractory Worker; Sheeting Setter & Driver, Heavy Building Excavation; Underground Work - Open Ditch or Excavation 8' Below Grade; Underpinning; & Hod Carrier

GROUP 4 - Driller for Blasting Purposes; Dynamite Blasters or substitute products Tovex TR, Water, Gas, Gel, Bristar, Silent Dynamite, etc.; Asbestos Abatement Worker; & Hazardous Waste Worker

---

LABO1091D 05/01/1999

	Rates	Fringes
ST. LOUIS COUNTY (South of TR 55):		
LABORERS:		
Asbestos Abatement	18.16	6.80

---

* LABO1097B 05/01/2001

	Rates	Fringes
POLK COUNTY (Excluding the city limits of East Grand Forks):		
LABORERS (Treatment Plants):		
Projects Under $760,000 including Mechanical & Electrical:		
GROUP 1	13.48	5.06
GROUP 2	13.67	5.06
GROUP 3	13.84	5.06
FLAGPERSON	11.88	5.06
Projects $760,000 & Over, including Mechanical & Electrical:		
GROUP 1	15.68	5.06
GROUP 2	16.08	5.06
GROUP 3	16.28	5.06
FLAGPERSON	13.98	5.06

LABORER CLASSIFICATIONS

GROUP 1 - Construction; Carpenter Tender; Concrete; Damp Proofer Below Grade; Dump Person - Dirt, Asphalt, Concrete & Cement; Heater Tender; Hot Tar Caulker - Corker; Joist Handler; Material Handler - Power Buggy; Rebar; Signal Person; & Snow Blower Operator; Chain Saw Operator; Concrete Vibrator; Demolition & Wrecking, Excluding Remodeling; Mason Tender;

Mortar Mixer - Cement or Any Other Substitute Material or Composition; Pipe Handler; Pneumatic & Electric Tool, Jackhammer, Paving Buster, Chipping Hammer, Tamper Operator, Etc.; Swing Stage Line Scaffold (Not including "Patent" Scaffolding); & Torch Person - Gas, Electric, Thermal or similar device; Scrapping, Sweeping & Clean-up; Skid Steer, Forklift (Incidental Use)

GROUP 2 - Creosote Handler; Caisson Work; Concrete Saw Drill Operator; Nozzle Operator - Gunite, Cement, Sandblasting; Pipelayer; Sheeting Setter & Driver, Heavy Building Excavation; Underground Work - Open Ditch or Excavation 8' Below Grade; Underpinning; & High Pay/Low Pay - 40 ft. Over or Under Ground Floor without Conventional Floor Areas; Pipe-Rehab Technician, including Cleaning, Cutting, Camering, etc.; & Wall Mounted Saw Operator

GROUP 3 - Driller for Blasting Purposes; Dynamite Blaster or substitute products; & Tovex TR, Water, Gas, Gel, Bristar, Silent Dynamite, etc.

---

* LABO1097D 05/01/2001

	Rates	Fringes
ST. LOUIS COUNTY (North of T 55 N):		
LABORERS (Treatment Plants):		
GROUP 1	19.67	5.81
GROUP 2	20.07	5.81
GROUP 3	20.37	5.81
Flagperson	17.77	5.81
Refractory Worker	21.67	5.81

LABORERS CLASSIFICATIONS

GROUP 1 - Construction; Carpenter Tender; Concrete; Damp Proofer Below Grade; Dump Person - Dirt, Asphalt, Concrete & Cement; Heater Tender; Hot Tar Caulker - Corker; Joist Handler; Material Handler - Power Buggy; Rebar; Signal Person; & Snow Blower Operator; Chain Saw Operator; Concrete Vibrator; Demolition & Wrecking, Excluding Remodeling; Mason Tender; Mortar Mixer - Cement or Any Other Substitute Material or Composition; Pipe Handler; Pneumatic & Electric Tool, Jackhammer, Paving Buster, Chipping Hammer, Tamper Operator, Etc.; Swing Stage Line Scaffold (Not including "Patent" Scaffolding); & Torch Person - Gas, Electric, Thermal or similar device; Scrapping, Sweeping & Clean-up; Skid Steer, Forklift (Incidental Use)

GROUP 2 - Creosote Handler; Caisson Work; Concrete Saw Drill Operator; Nozzle Operator - Gunite, Cement, Sandblasting; Pipelayer; Sheeting Setter & Driver, Heavy Building Excavation; Underground Work - Open Ditch or Excavation 8' Below Grade; Underpinning; & High Pay/Low Pay - 40 ft. Over or Under Ground Floor without Conventional Floor Areas; Pipe-Rehab Technician, including Cleaning, Cutting, Camering, etc.; & Wall Mounted Saw Operator

GROUP 3 - Driller for Blasting Purposes; Dynamite Blaster or substitute products; & Tovex TR, Water, Gas, Gel, Bristar, Silent Dynamite, etc.

LABO1097G 05/01/1999

	Rates	Fringes
POLK COUNTY (Excluding the city limits of East Grand Forks); & ST. LOUIS COUNTY (N. of TR 55, but excluding a 20-mile radius of Grand Forks, North Dakota):		
LABORERS:		
Asbestos Abatement	18.16	6.80

LABO9900O 05/01/2000

	Rates	Fringes
LABORERS (Heavy, Sewer & Water Lines):		
ANOKA, CARVER, CHISAGO, DAKOTA, HENNEPIN, ISANTI, RAMSEY, SCOTT, SHERBURNE, WASHINGTON & WRIGHT COUNTIES:		
GROUP 1	20.74	5.56
GROUP 2	20.94	5.56
GROUP 3	21.09	5.56
GROUP 4	21.19	5.56
GROUP 5	21.44	5.56
GROUP 6	22.74	5.56
GROUP 7	17.04	5.31
BENTON & STEARNS COUNTIES:		
GROUP 1	16.79	5.31
GROUP 2	16.99	5.31
GROUP 3	17.14	5.31
GROUP 4	17.24	5.31
GROUP 5	17.49	5.31
GROUP 6	18.79	5.31
GROUP 7	13.89	5.11
CLAY (Excluding City Limits of Moorhead) & POLK (Excluding City Limits of East Grand Forks) COUNTIES:		
GROUP 1	14.34	4.61
GROUP 2	14.54	4.61
GROUP 3	14.69	4.61
GROUP 4	14.79	4.61
GROUP 5	15.04	4.61
GROUP 6	16.34	4.61
GROUP 7	12.34	4.56
HOUSTON & OLMSTED COUNTIES:		
GROUP 1	17.94	5.21
GROUP 2	18.14	5.21
GROUP 3	18.29	5.21

GROUP 4	18.39	5.21
GROUP 5	18.64	5.21
GROUP 6	19.94	5.21
GROUP 7	15.04	5.01

ST. LOUIS COUNTY (South of T. 55 N):

GROUP 1	19.87	5.56
GROUP 2	20.07	5.56
GROUP 3	20.22	5.56
GROUP 4	20.32	5.56
GROUP 5	20.57	5.56
GROUP 6	21.87	5.56
GROUP 7	16.32	5.31

ST. LOUIS COUNTY (North of T. 55 N):

GROUP 1	19.47	5.96
GROUP 2	19.67	5.96
GROUP 3	19.82	5.96
GROUP 4	19.92	5.96
GROUP 5	20.17	5.96
GROUP 6	21.47	5.96
GROUP 7	16.32	5.31

LABORER CLASSIFICATIONS

GROUP 1 - Construction; Bituminous Batcherperson (Stationary Plant); Bituminous Worker - Shoveler, Raker, Floater, Squeegee, Utility; Blaster Tender; Brick Tender; Carpenter Tender; Cement Coverperson Batch Truck; Cement Handler - Bulk, Bag; Concrete Batcherperson; Concrete Handler, Caisson, Footings, Columns, Piling, Slabs, etc.; Concrete Longitudinal Float Operator (Manual Bullfloat on Paving); Concrete Shoveler, Tamper & Puddler (Paving); Conduit Layer; Curb Setter; Damp Proofer Below Grade; Demolition of an entire Structural System, Excluding Remodeling; Drill Runner Tender; Dump Operator (Dirt, Paver, Dumping Batch Truck, etc.); Fabric Installer; Grade Checker; Hydrant & Valve Setter; Hydro Blast or Waterblaster; Joint Filler (Concrete Pavement); Kettleperson (Bituminous or Lead); Labor Wrecking Demolition; Mortar Mixer; Pipe Handler; Pipelayer ($1.00 Premium); Power Buggy Operator; Pump Operator (Less than 6"); Reinforced Steel Laborer; Reinforced Steel Setter (Paving); Retaining Wall Installation; Sand Cushion Bedmaker; Service Connection Maker (Water, Gas); Signalperson; Slip Lining of Utility Lines; Soil Stabilizer; Sound Barrier & Guard Rail Installation; Squeegeeperson; Stabilizing

Batcherperson (Stationary Plant); Temporary Heaters & Blower Tender; Top Person (Sewer, Water or Gas Trench); Traffic Controller (Traffic Barriers) & Transit/Level

GROUP 2 - Chain Saw; Compaction Equipment (Hand Operated or Remote Control); Concrete Drilling; Concrete Mixer Operator; Concrete Sawer; Concrete Vibrator; Ditch & Other Work more than 8' Below starting level of manual work; Formsetter; Joint Sawer, Mortar; Pipe Fuser/Technician; Pneumatic Tools,

Jackhammer, Paving Buster, Chipping Hammer, etc.; Remote Control Demo Machine & Related Accessories (Electric/Hydraulic); Stone Tender/Mason Tender; & Torchperson - Gas, Electric, Thermal or Similar Device

GROUP 3 - Brick or Block Paving Setter; Caisson Work; Cofferdam Work

GROUP 4 - Bottomperson (Sewer, Water or Gas Trench - More than 8' Below starting level or manual Work); Cement Gun Operator (1 1/2" or Over); Driller - Air Track or Similar; & Nozzle Operator (Gunite, Sandblasting, Cement)

GROUP 5 - Asbestos & Hazardous Waste Tech; Tunnel Laborer; Tunnel Miner; Tunnel Miner Tender; Underground Laborer; & Underpinning

GROUP 6 - Blasting Person (Dynamite or substitute Products); & Tunnel Miner Under Pressure

GROUP 7 - Flagperson

LABO9900Q 05/01/1998

	Rates	Fringes
LABORERS (Heavy, Sewer & Water Lines):		
CLAY (City Limits of Moorhead) & POLK (City Limits of East Grand Forks) COUNTIES:		
GROUP 1	13.26	4.29
GROUP 2	13.46	4.29
GROUP 3	13.61	4.29
GROUP 4	13.71	4.29
GROUP 5	13.96	4.29
GROUP 6	15.26	4.29
GROUP 7	11.26	4.24

LABORER CLASSIFICATIONS

GROUP 1 - Construction; Bituminous Batcherperson (Stationary Plant); Bituminous Worker - Shoveler, Raker, Floater, Squeegee, Utility; Blaster Tender; Brick Tender; Carpenter Tender; Cement Coverperson Batch Truck; Cement Handler - Bulk, Bag; Concrete Batcherperson; Concrete Handler, Caisson, Footings, Columns, Piling, Slabs, etc.; Concrete Longitudinal Float Operator (Manual Bullfloat on Paving); Concrete Shoveler, Tamper &

Puddler (Paving); Conduit Layer; Curb Setter; Damp Proofer Below Grade; Demolition of an entire Structural System, Excluding Remodeling; Drill Runner Tender; Dump Operator (Dirt, Paver, Dumping Batch Truck, etc.); Fabric Installer; Grade Checker; Hydrant & Valve Setter; Hydro Blast or Waterblaster; Joint Filler (Concrete Pavement); Kettleperson (Bituminous or Lead); Labor Wrecking Demolition; Mortar Mixer; Pipe Handler; Pipelayer ($1.00 Premium); Power Buggy Operator; Pump Operator (Less than 6"); Reinforced Steel Laborer; Reinforced Steel

Setter (Paving); Retaining Wall Installation; Sand Cushion Bedmaker; Service Connection Maker (Water, Gas); Signalperson; Slip Lining of Utility Lines; Soil Stabilizer; Sound Barrier & Guard Rail Installation; Squeegeeperson; Stabilizing Batcherperson (Stationary Plant); Temporary Heaters & Blower Tender; Top Person (Sewer, Water or Gas Trench); Traffic Controller (Traffic Barriers) & Transit/Level

GROUP 2 - Chain Saw; Compaction Equipment (Hand Operated or Remote Control); Concrete Drilling; Concrete Mixer Operator; Concrete Sawer; Concrete Vibrator; Ditch & Other Work more than 8' Below starting level of manual work; Formsetter; Joint Sawer, Mortar; Pipe Fuser/Technician; Pipe Rehab Technician, including Cleaning, Cutting, Cameraing, etc.; Pneumatic Tools, Jackhammer, Paving Buster, Chipping Hammer, etc.; Remote Control Demo Machine & Related Accessories (Electric/ Hydraulic); Stone Tender/Mason Tender; & Torchperson - Gas, Electric, Thermal or Similar Device

GROUP 3 - Brick or Block Paving Setter; Caisson Work; Cofferdam Work

GROUP 4 - Bottomperson (Sewer, Water or Gas Trench - More than 8' Below starting level or manual Work); Cement Gun Operator (1 1/2" or Over); Driller - Air Track or Similar; & Nozzle Operator (Gunite, Sandblasting, Cement)

GROUP 5 - Asbestos & Hazardous Waste Tech; Tunnel Laborer; Tunnel Miner; Tunnel Miner Tender; Underground Laborer; & Underpinning

GROUP 6 - Blasting Person (Dynamite or substitute Products); & Tunnel Miner Under Pressure

GROUP 7 - Flagperson

PAIN0061F 05/01/2000

	Rates	Fringes
CHISAGO, DAKOTA, RAMSEY & WASHINGTON COUNTIES:		
PAINTERS:		
GROUP 1	23.50	8.28
GROUP 2	17.63	8.28
GROUP 3	24.25	8.28

PAINTER CLASSIFICATIONS

GROUP 1 - Brush; Drywall Finisher; & Paperhanger
GROUP 2 - Drywall Sander
GROUP 3 - Sandblaster; Spray; Swing Stage; Boatswain Chair; Window Jack; Safety Belt; Erected Structural Steel; Bridges; & Application of Epoxy Materials & Materials containing over 50% Creosote

---

* PAIN0106I 05/01/2001

	Rates	Fringes
ST LOUIS COUNTY		
GLAZIERS	20.15	7.20+a

FOOTNOTE:
a. 1 to 4 years' service - 1 week's paid vacation; 5 to 11 years' service - 2 weeks' paid vacation; 11 years' service or more - 3 weeks' paid vacation

---

* PAIN0106J 05/01/2001

	Rates	Fringes
ST. LOUIS COUNTY:		
PAINTERS:		
REPAINT:		
Brush & Roller	21.23	7.73
Paperhanger, Spray, Steel, and Taper	21.83	7.73
New:		
Brush; Roller	22.73	7.73
Paperhanger, Spray, Steel, and Taper	23.33	7.73

PAIN0386I 05/01/2000

	Rates	Fringes
ANOKA, CARVER, HENNEPIN, ISANTI, SCOTT, SHERBURNE (South & East of a line drawn between the town of Santiago in Sherburne County and the town of Clearwater in Wright County) & WRIGHT COUNTIES:		
PAINTERS:		
Brush; Roller; & Wallpaper Hanger	24.31	7.72
Spray; Steel; Sandblaster; Swing Stage & Epoxy	25.06	7.72

PAIN0386J 05/01/2000

	Rates	Fringes
ANOKA, CARVER, HENNEPIN, ISANTI, SCOTT, SHERBURNE (South & east of a line drawn between the town of Santiago, Sherburne County and the town of Clearwater, Wright County) & WRIGHT COUNTIES:		
PAINTERS:		
Drywall Taper/Finisher	23.97	7.85
Sander	17.98	7.85

PAIN0681E 05/01/2001

	Rates	Fringes
HOUSTON & OLMSTED COUNTIES:		
CORPORATE CITY LIMITS OF ROCHESTER, OLMSTED COUNTY:		
PAINTERS:		

Brush & Roller	22.13	6.07
Paperhanger & Steel	22.38	6.07
Sandblasting & Spray	22.63	6.07
Stageman & Beltman	23.13	6.07

REMAINING AREA:

$600,000 & over in volume including Electrical & Mechanical:

PAINTERS:

Brush & Roller	22.13	6.07
Paperhanger & Steel	22.38	6.07
Sandblasting & Spray	22.63	6.07
Stageman & Beltman	23.13	6.07

Under $600,000 in volume including Electrical & Mechanical:

PAINTERS:

Brush & Roller	18.81	6.07
Paperhanger & Steel	19.02	6.07
Sandblasting & Spray	19.24	6.07
Stageman & Beltman	19.66	6.07

APPLICATION OF EPOXY, CREOSOTE OR ALL OTHER HIGHLY TOXIC MATERIALS - $ .25 PREMIUM

PAIN0681H 05/01/2001

	Rates	Fringes
HOUSTON & OLMSTED COUNTIES:		
DRYWALL FINISHERS	21.74	6.07
DRYWALL SANDERS	16.31	6.07

PAIN0880A 05/01/1999

	Rates	Fringes
SIGN PAINTERS	21.12	2.08+a+b

FOOTNOTES:

a. 8 Paid Holidays: New Year's Day; Memorial Day; Independence Day; Labor Day; Thanksgiving Day; the Day After Thanksgiving; the last working Day Before Christmas; & Christmas Day

b. Vacation Pay: 3 yrs' service - 2 wks' paid vacation; 6 yrs'

service - 3 wks' paid vacation; 15 yrs' service - 4 wks' paid vacation

---

PAIN0884F 06/01/2001

	Rates	Fringes
PAINTERS:		

BENTON, SHERBURNE (Western one-half, North & West of a line drawn between the city of Santiago in Sherburne County & the city of

Clearwater in Wright County) & STEARNS COUNTIES:

Projects Under $8,000.00:

GROUP 1	15.21	6.57
GROUP 2	15.21	6.57
GROUP 3	15.81	6.57

All Other Work:

GROUP 1	19.01	6.57
GROUP 2	19.01	6.57
GROUP 3	19.76	6.57

CLAY & POLK COUNTIES:

Projects Under $8,000.00:

GROUP 1	14.41	1.87
GROUP 2	14.41	5.85
GROUP 3	15.16	1.87

All Other Work:

GROUP 1	18.01	1.87
GROUP 2	18.01	5.85
GROUP 3	18.76	1.87

PAINTER CLASSIFICATIONS

GROUP 1: Brush & Roller

GROUP 2: Drywall Taper & Finisher

GROUP 3: Spray; Two Component Paints; Epoxies; Sandblasting & Rigging; Bridge Painting; Work done on Swing Scaffolding, Safety Harness, Boatswain's Chair, Coverings & Erection of Scaffolding for same, Work on Erected Structural Steel, Storage Bins, Tanks, Abrasive Blasting; Steeple Jack Work which applies to Smokestacks, Elevated Tanks & Erected Towers over 35 ft. & Flag Poles; & Structural Supports

---

PAIN1324E 06/01/1999

	Rates	Fringes
ANOKA, BENTON, CARVER, CHISAGO, CLAY, DAKOTA, HENNEPIN, HOUSTON, ISANTI, OLMSTED, POLK, RAMSEY, SCOTT, SHERBURNE, STEARNS, WASHINGTON & WRIGHT COUNTIES:		
GLAZIERS	24.31	7.89

PLAS0265D 06/01/2000

	Rates	Fringes
ANOKA, CARVER, CHISAGO, DAKOTA, HENNEPIN, ISANTI, RAMSEY, SCOTT, SHERBURNE, WASHINGTON & WRIGHT COUNTIES:		
PLASTERERS	24.88	8.35

PLAS6330I 05/01/2000

	Rates	Fringes
ST. LOUIS COUNTY (South of T 55N):		
CEMENT MASONS (Treatment Plants)	21.34	8.15

PLAS6330J 05/01/2000

	Rates	Fringes
HOUSTON & OLMSTED COUNTIES:		
CEMENT MASONS (Treatment Plants):	23.29	4.37

PLAS6330K 05/01/2000

	Rates	Fringes
ANOKA, CARVER, CHISAGO, DAKOTA, HENNEPIN, ISANTI, RAMSEY, SCOTT, SHERBURNE, WASHINGTON & WRIGHT COUNTIES:		
CEMENT MASONS (Treatment Plants)	24.99	7.96

PLAS6330L 05/01/2000

	Rates	Fringes
ST. LOUIS COUNTY (North of T 55N):		
CEMENT MASONS (Treatment Plants)	18.20	9.00

PLAS6330M 05/01/2000

	Rates	Fringes
ST. LOUIS COUNTY:		
PLASTERERS	19.62	8.70

PLAS6330N 06/01/2000

	Rates	Fringes
HOUSTON & OLMSTED COUNTIES:		
PLASTERERS	25.25	2.40

PLAS6330O 05/01/2000

	Rates	Fringes
ST. LOUIS COUNTY (South of T 55N):		
CEMENT MASONS (Heavy, Sewer & Water Lines)	20.33	10.70

PLAS6330P 05/01/2000

	Rates	Fringes
ANOKA, CARVER, CHISAGO, DAKOTA, HENNEPIN, ISANTI, RAMSEY, SCOTT, SHERBURNE, WASHINGTON & WRIGHT COUNTIES:		
CEMENT MASONS (Heavy, Sewer & Water		

Lines)	23.79	7.96

PLAS6330Q 05/01/2000

	Rates	Fringes
ST. LOUIS COUNTY (North of T 55N):		
CEMENT MASONS (Heavy, Sewer & Water Lines)	18.20	9.00

PLAS6330R 05/01/2000

	Rates	Fringes
HOUSTON & OLMSTED COUNTIES:		
CEMENT MASONS (Heavy, Sewer & Water Lines)	22.69	4.75

PLAS6330U 07/01/1999

	Rates	Fringes
POLK COUNTY:		
CEMENT MASONS (Treatment Plants)	18.35	5.80

PLAS6330W 05/01/2000

	Rates	Fringes
BENTON, CLAY & POLK COUNTIES:		
PLASTERERS	17.75	4.65

PLUM0006E 08/01/2001

	Rates	Fringes
HOUSTON COUNTY:		
PIPEFITTERS; PLUMBERS; & STEAMFITTERS:		
Mechanical Contracts Up to $75,000.00	22.93	8.35
All Other Mechanical Contracts	28.66	8.35
OLMSTED COUNTY:		
PIPEFITTERS; PLUMBERS; & STEAMFITTERS	22.93	8.35

PLUM0011H 05/01/2001

	Rates	Fringes
ST. LOUIS COUNTY (South of an east-west line drawn through Cotton)		
PLUMBERS, PIPEFITTERS, and STEAMFITTERS	26.35	9.15

PLUM0015E 05/01/2001

	Rates	Fringes
ANOKA, CARVER, HENNEPIN, ISANTI, SCOTT, SHERBURNE (East of a line running northeasterly from the point of Wright County that lies furthest north to that point of Mille Lacs County that is south by west) & WRIGHT COUNTIES:		
PLUMBERS	27.70	9.17+a

FOOTNOTE:
a. Paid Holiday: Labor Day

PLUM0015F 05/01/2001

	Rates	Fringes
BENTON & STEARNS COUNTIES		
PLUMBERS	25.80	9.71+a

FOOTNOTE:
a. Paid Holiday: Labor Day

PLUM0034E 05/01/2001

	Rates	Fringes
CHISAGO, DAKOTA, RAMSEY & WASHINGTON COUNTIES		
PLUMBERS	28.90	9.68+a

FOOTNOTE:
a. 1 Paid Holiday: Labor Day

PLUM0126E 11/01/2000

	Rates	Fringes
CLAY & POLK COUNTIES:		
PLUMBERS & STEAMFITTERS:		
Mechanical Projects, excluding Sheet Metal, Fire Protection & Pipe Insulation of Up to $2,000,000	24.12	7.78
Mechanical Projects, excluding Sheet Metal, Fire Protection & Pipe Insulation of $2,000,000 & above	26.52	7.78

PLUM0417B 06/01/2001

	Rates	Fringes
ANOKA, DAKOTA, HENNEPIN, RAMSEY, SCOTT & WASHINGTON COUNTIES:		
SPRINKLER FITTERS	29.42	11.17+a

FOOTNOTE:

a. 6 Paid Holidays: Memorial Day; July 4th; Friday before Labor Day; Labor Day; Columbus Day; & Thanksgiving Day

---

PLUM0455F 05/01/2001

	Rates	Fringes
CHISAGO, DAKOTA, RAMSEY & WASHINGTON COUNTIES		
PIPEFITTERS & STEAMFITTERS	29.10	10.10

PLUM0539G 05/01/2001

	Rates	Fringes
ANOKA, CARVER, HENNEPIN, ISANTI, SCOTT, SHERBURNE (East of a line running North-Easterly from the point of Wright Co.that lies furthest North to that point of Mille Lacs that is South by West) & WRIGHT COUNTIES:		
PIPEFITTERS	29.77	9.51

PLUM0539L 05/01/2001

	Rates	Fringes
BENTON, SHERBURNE (West of a line running North-Easterly from point of Wright Co. lies furthest North to point of Mille Lacs that is South by West) & STEARNS COUNTIES:		
PIPEFITTERS	23.72	11.83

PLUM0589E 06/01/2001

	Rates	Fringes
ST. LOUIS COUNTY (North of an East-West line drawn through Cotton)		
PIPEFITTERS; PLUMBERS; & STEAMFITTERS	23.62	11.42

ROOF0096U 06/01/1998

	Rates	Fringes
ROOFERS:		
HOUSTON COUNTY	16.01	3.92
OLMSTED COUNTY	17.34	3.92

ROOF0096V 07/01/2000

	Rates	Fringes
ST. LOUIS COUNTY (South of Hwy 16, excluding city of Forbes):		
ROOFERS	22.20	7.15

ROOF0096W 05/01/2000

	Rates	Fringes
ANOKA, CARVER, CHISAGO, DAKOTA, HENNEPIN, ISANTI (South of State		

Highway #95, including Cambridge), RAMSEY, SCOTT, WASHINGTON & WRIGHT (South of County Road #39) COUNTIES:

ROOFERS	24.94	7.63+a

FOOTNOTE:
a. 1 Paid Holiday: Labor Day

ROOF0096X 06/01/2000

	Rates	Fringes
BENTON, ISANTI (North of State Highway #95, excluding Cambridge), SHERBURNE, STEARNS & WRIGHT (North of Wright County Road #39, from South Haven to Monticello, including both towns) COUNTIES:		
ROOFERS	21.50	5.45

ROOF0096Y 05/01/2000

	Rates	Fringes
ST. LOUIS COUNTY (Northern two-thirds):		
ROOFERS	18.20	5.20

ROOF0214B 04/01/1998

	Rates	Fringes
CLAY & POLK COUNTIES:		
ROOFERS	10.83	

SFMN0669D 04/01/2001

	Rates	Fringes
BENTON, CARVER, CHISAGO, CLAY, HOUSTON, ISANTI, OLMSTED, POLK, SHERBURNE, ST. LOUIS, STEARNS & WRIGHT COUNTIES:		
SPRINKLER FITTERS	26.36	8.00

SHEE0010U 05/01/2001

	Rates	Fringes
BENTON, SHERBURNE & STEARNS COUNTIES		
SHEET METAL WORKERS	24.91	9.79

SHEE0010V 06/01/2001

	Rates	Fringes
CLAY COUNTY		
SHEET METAL WORKERS	18.94	6.39

SHEE0010W 05/01/2000

	Rates	Fringes
ST. LOUIS COUNTY (Southern one-third):		

SHEET METAL WORKERS 24.28 9.88

SHEE0010X 05/01/2001

	Rates	Fringes
ST. LOUIS COUNTY (Northern two-thirds)		
SHEET METAL WORKERS	24.83	9.57

SHEE0010Y 05/01/2001

	Rates	Fringes
ANOKA, CARVER, CHISAGO, DAKOTA, HENNEPIN, ISANTI, RAMSEY, SCOTT, WASHINGTON & WRIGHT COUNTIES		
SHEET METAL WORKERS	28.26	10.68+a

FOOTNOTE:
a. Paid Holiday: Labor Day

SHEE0010Z 05/01/2001

	Rates	Fringes
OLMSTED COUNTY		
SHEET METAL WORKERS	25.11	8.72

SHEE1000A 05/01/1999

	Rates	Fringes
HOUSTON COUNTY:		
SHEET METAL WORKERS:		
Sheet Metal Installations of $50,000.00 & Under	17.53	6.49
All Other Work	19.69	6.49

SHEE1000E 06/01/2001

	Rates	Fringes
CLAY COUNTY		
SHEET METAL WORKERS	19.79	6.05

TEAM0132F 05/01/2000

	Rates	Fringes
CHISAGO (Northern half) & ISANTI COUNTIES:		
TRUCK DRIVERS (Treatment Plants)	23.08	

TEAM0160I 05/01/2000

	Rates	Fringes
TRUCK DRIVERS (Heavy, Sewer & Water Lines):		
ANOKA, CARVER, CHISAGO (S. of T. 34-N), DAKOTA, HENNEPIN, RAMSEY,		

ST. LOUIS, SCOTT, SHERBURNE, WASHINGTON & WRIGHT COUNTIES:

GROUP 1	19.80	5.70
GROUP 2	19.25	5.70
GROUP 3	19.15	5.70
GROUP 4	18.90	5.70

BENTON, CHISAGO (N. of T. 34-N), CLAY, ISANTI, POLK & STEARNS COUNTIES:

GROUP 1	16.32	5.70
GROUP 2	15.81	5.70
GROUP 3	15.66	5.70
GROUP 4	15.66	5.70

HOUSTON & OLMSTED COUNTIES:

GROUP 1	18.00	5.70
GROUP 2	17.45	5.70
GROUP 3	17.35	5.70
GROUP 4	17.15	5.70

TRUCK DRIVER CLASSIFICATIONS

GROUP 1 - Boom; Mechanic; Off-Road, including Articulated Dump Truck; Tractor Trailer; Truck Driver (Operation of Hand & Power Operated Winch); & Winches

GROUP 2 - Tri Axles (Including Four Axles)

GROUP 3 - Bituminous Distributor; Bituminous Distributor (One man operation); Tandem Axles; & Single Axles

GROUP 4 - Bituminous Distributor Spray Operator (Rear End Oiler); Dumpman; Pilot Car; Self-propelled Packer; Slurry Operator; Tank Truck Tender (Gas, Oil, Road Oil & Water); Tractor Operator (Wheel type used for any purpose)

THE FOLLOWING CLASSIFICATIONS SHALL COME UNDER THE APPROPRIATE AXLE RATE WAGE GROUP:
"A" Frame; Dry Batch Hauler; Ready-Mix Concrete; Slurry;

Tank (Gas, Oil, Road Oil & Water)

TEAM0221D 05/30/1998

	Rates	Fringes
LANDSCAPE - SOD, TREES, SHRUBS & BLACK DIRT:		
Single Axles & Farm Tractors	12.15	4.00
Tandem Axles	12.30	4.00
Truck-Train Combination	12.45	4.00

TEAM0346D 05/01/1998

	Rates	Fringes
ANOKA, CARVER, CHISAGO (Southern half), DAKOTA, HENNEPIN, RAMSEY, ST. LOUIS, SCOTT, SHERBURNE, WASHINGTON & WRIGHT COUNTIES:		

TRUCK DRIVERS (Treatment Plants):

GROUP 1 - Boom Truck Operator	19.55	4.50
GROUP 2 - Ready-Mix; Tractor-Trailer	19.00	4.50
GROUP 3 - Mechanic; Fork Lift Operator; & Tandem or 3 Axles	18.90	4.50
GROUP 4 - Farm Tractor; Single or 2 Axles; & Dumps	18.65	4.50

TEAM0405C 05/01/1999

	Rates	Fringes
HOUSTON COUNTY		
TRUCK DRIVERS (Treatment Plants)	15.49	
OLMSTED COUNTY		
TRUCK DRIVERS (Treatment Plants)	16.94	

TEAM0563C 05/01/1999

	Rates	Fringes
BENTON, CLAY (Except City limits of Moorhead) & STEARNS COUNTIES:		
TRUCK DRIVERS (Treatment Plants):		
Total Construction Projects of Over $950,000.00	15.59	
Total Construction Projects Under $950,000.00	13.84	

TEAM0580C 04/19/1999

	Rates	Fringes
CLAY (Moorhead) & POLK (East Grand Forks) COUNTIES:		
TRUCK DRIVERS (Treatment Plants)	14.05	

TEAM1097B 05/01/1999

	Rates	Fringes
POLK COUNTY (Excluding the city limits of East Grand Forks):		
TRUCK DRIVERS (Treatment Plants):		
Under $760,000.00, including Mechanical & Electrical	11.86	
$760,000.00 & Over, including Mechanical & Electrical	13.95	

WELDERS - Receive rate prescribed for craft performing operation to which welding is incidental.

==========

Unlisted classifications needed for work not included within the scope of the classifications listed may be added after

award only as provided in the labor standards contract clauses (29 CFR 5.5(a)(1)(v)).

In the listing above, the "SU" designation means that rates listed under that identifier do not reflect collectively bargained wage and fringe benefit rates. Other designations indicate unions whose rates have been determined to be prevailing.

WAGE DETERMINATION APPEALS PROCESS

1.) Has there been an initial decision in the matter? This can be:

* an existing published wage determination
* a survey underlying a wage determination
* a Wage and Hour Division letter setting forth a position on a wage determination matter
* a conformance (additional classification and rate) ruling

On survey related matters, initial contact, including requests for summaries of surveys, should be with the Wage and Hour Regional Office for the area in which the survey was conducted because those Regional Offices have responsibility for the Davis-Bacon survey program. If the response from this initial contact is not satisfactory, then the process described in 2.) and 3.) should be followed.

With regard to any other matter not yet ripe for the formal process described here, initial contact should be with the Branch of Construction Wage Determinations. Write to:

Branch of Construction Wage Determinations
Wage and Hour Division
U. S. Department of Labor
200 Constitution Avenue, N. W.
Washington, D. C. 20210

2.) If the answer to the question in 1.) is yes, then an interested party (those affected by the action) can request review and reconsideration from the Wage and Hour Administrator (See 29 CFR Part 1.8 and 29 CFR Part 7). Write to:

Wage and Hour Administrator
U.S. Department of Labor
200 Constitution Avenue, N. W.
Washington, D. C. 20210

The request should be accompanied by a full statement of the interested party's position and by any information (wage payment data, project description, area practice material, etc.) that the requestor considers relevant to the issue.

3.) If the decision of the Administrator is not favorable, an interested party may appeal directly to the Administrative Review Board (formerly the Wage Appeals Board). Write to:

Administrative Review Board
U. S. Department of Labor
200 Constitution Avenue, N. W.
Washington, D. C. 20210

4.) All decisions by the Administrative Review Board are final.

END OF GENERAL DECISION

MN010061-32

SECTION TABLE OF CONTENTS

DIVISION 01 - GENERAL REQUIREMENTS

SECTION 01030

BID OPTIONS

1/00

PART 1 GENERAL

1.1 DESCRIPTION OF BID OPTIONS
1.1.1 Bid Option O-1
1.1.2 Bid Option O-2
1.1.3 Bid Option O-3
1.1.4 Bid Option O-4
1.1.5 Bid Option O-5
1.1.6 Bid Option O-6
1.1.7 Bid Option O-7
1.1.8 Bid Option O-8
1.1.9 Bid Option O-9
1.1.10 Bid Option O-10

PART 2 PRODUCTS (Not Applicable)

PART 3 EXECUTION (Not Applicable)

-- End of Section Table of Contents --

SECTION 01030

BID OPTIONS
1/00

PART 1 GENERAL

1.1 DESCRIPTION OF BID OPTIONS

1.1.1 Bid Option O-1

Sitework associated with the North Parking Lot addition. Extent of area to be included shall be as delineated on Drawing C5.3. Scope of work under this Bid Option includes includes selective demolition, clearing and grubbing, grading, storm sewer, subgrade preparation,curb & gutter, aggregate base course, bituminous paving, and signing and striping.

1.1.2 Bid Option O-2

Landscaping associated with the Southwest and Southeast Courtyards on the south side of the Phase Three and Phase Two buildings. Extent of area to be included shall be as delineated on Drawing L1.1. Scope of work under this Bid Option includes includes finish grading, stone landscape steps (see architectural drawing A5.17), sodding (in lieu of seeding specified under Basic Bid), landscaping and the site irrigation system related to this work.

1.1.3 Bid Option O-3

Landscaping associated with the existing Northeast Parking Lot, Northeast Courtyard, eastern edge along Kittyhawk Avenue and southeast corner of the site. Extent of area to be included shall be as delineated on Drawing L1.1. Scope of work under this Bid Option includes includes adding topsoil to provide finish grading as indicated on L1.1, sodding (in lieu of seeding specified under Basic Bid), landscaping and the site irrigation system related to this work.

1.1.4 Bid Option O-4

Landscaping associated with the Northwest Courtyard, western edge of the site and southwestt corner of the site. Extent of area to be included shall be as delineated on Drawing L1.1. Scope of work under this Bid Option includes includes finish grading, seeding, sodding (in lieu of seeding specified under Basic Bid), landscaping and the site irrigation system related to this work.

1.1.5 Bid Option O-5

Excavation and disposal of all unsuitable soil below the footprint of the future Phase Four building as delineated on Drawing C2.3. All work to be performed in accordance with Specification Section 02315.

1.1.6 Bid Option O-6

All finishing work to complete the interior areas of four guest rooms, and

their associated bathrooms, on First Floor (Rooms 1120, 1122, 1124, and 1126). The finished room layouts and details are indicated on drawings.

Under the Basic Bid scope of work, corridor walls are to be framed with gypsum board finished and painted on the corridor side and fire-taped only on the room side; corridor doors and hardware are to be installed, exterior wall work (including windows and PTAC units) is to be completed (except for installation of the interior gypsum board); common plumbing chase walls between bathrooms are to be framed to allow plumbing piping to be roughed in and capped; and temporary fire sprinkler and emergency lighting is to be provided. All remaining work is to be completed as part of the Bid Option. Refer to mechancial and electrical drawings for additional information.

1.1.7 Bid Option O-7

All finishing work to complete the interior areas of six guest rooms, and their associated bathrooms, on Second Floor (Rooms 2111, 2113, 2120, 2122, 2124, and 2126). The finished room layouts and details are indicated on drawings. Contractor is to assume this Bid Option will be exercised in conjuction with Bid Option O-6.

Under the Basic Bid scope of work, corridor walls are to be framed with gypsum board finished and painted on the corridor side and fire-taped only on the room side; corridor doors and hardware are to be installed, exterior wall work (including windows and PTAC units) is to be completed (except for installation of the interior gypsum board); common plumbing chase walls between bathrooms are to be framed to allow plumbing piping to be roughed in and capped; and temporary fire sprinkler and emergency lighting is to be provided. All remaining work is to be completed as part of the Bid Option. Refer to mechancial and electrical drawings for additional information.

1.1.8 Bid Option O-8

All finishing work to complete the interior areas of six guest rooms, and their associated bathrooms, on Third Floor (Rooms 3111, 3113, 3120, 3122, 3124, and 3126). The finished room layouts and details are indicated on drawings. Contractor is to assume this Bid Option will be exercised in conjuction with Bid Options O-6 and O-7.

Under the Basic Bid scope of work, corridor walls are to be framed with gypsum board finished and painted on the corridor side and fire-taped only on the room side; corridor doors and hardware are to be installed, exterior wall work (including windows and PTAC units) is to be completed (except for installation of the interior gypsum board); common plumbing chase walls between bathrooms are to be framed to allow plumbing piping to be roughed in and capped; and temporary fire sprinkler and emergency lighting is to be provided. All remaining work is to be completed as part of the Bid Option. Refer to mechancial and electrical drawings for additional information.

1.1.9 Bid Option O-9

All finishing work to complete the interior areas of six guest rooms, and their associated bathrooms, on Fourth Floor (Rooms 4111, 4113, 4120, 4122, 5124, and 3126). The finished room layouts and details are indicated on drawings. Contractor is to assume this Bid Option will be exercised in conjuction with Bid Options O-6, O-7 and O-8.

Under the Basic Bid scope of work, corridor walls are to be framed with gypsum board finished and painted on the corridor side and fire-taped only

on the room side; corridor doors and hardware are to be installed, exterior wall work (including windows and PTAC units) is to be completed (except for installation of the interior gypsum board); common plumbing chase walls between bathrooms are to be framed to allow plumbing piping to be roughed in and capped; and temporary fire sprinkler and emergency lighting is to be provided. All remaining work is to be completed as part of the Bid Option. Refer to mechancial and electrical drawings for additional information.

1.1.10 Bid Option O-10

All finishing work to complete the interior areas of twelve guest rooms, and their associated bathrooms, on the second floor of the existing Phase One building (Rooms 2001, 2002, 2003, 2010, 2011, 2012, 2013, 2014, 2015, 2016, 2017, and 2018). The finished room layouts and details are indicated on drawings. Contractor is responsible for verifying existing conditions.

PART 2 PRODUCTS (Not Applicable)

PART 3 EXECUTION (Not Applicable)

-- End of Section --

SECTION TABLE OF CONTENTS

DIVISION 01 - GENERAL REQUIREMENTS

SECTION 01040

AS-BUILT DRAWINGS

5/00; Rev 11/01

PART 1 GENERAL

1.1 DEFINITIONS
1.1.1 Red-Line Drawings
1.1.2 As-Built Drawings
1.1.3 Vellum Drawings
1.1.4 Black-Line Drawings
1.1.5 Full-Size Drawings
1.1.6 Half-Size Drawings
1.1.7 Modification Circle
1.1.8 Mylar Drawings
1.1.9 Electronic CADD Files
1.2 GENERAL REQUIREMENTS
1.3 PAYMENT
1.4 TRANSMITTAL OF AS-BUILT DRAWINGS
1.4.1 Preliminary As-Built Drawings
1.4.2 Final As-Built Drawings
1.5 PROCEDURE
1.6 TITLE BLOCKS
1.7 PROCEDURES FOR POSTING MODIFICATION CHANGES TO DRAWINGS
1.8 WORD ABBREVIATIONS
1.9 LEGEND SHEETS
1.10 CONTRACTOR SHOP DRAWINGS
1.11 INDEXING OF DRAWINGS

PART 2 PRODUCTS (NOT APPLICABLE)

PART 3 EXECUTION

3.1 GENERAL
3.2 SITE WORK
3.2.1 Utilities
3.2.2 Structures
3.2.3 Grades
3.3 STRUCTURAL
3.3.1 Steel
3.4 MECHANICAL
3.4.1 Ductwork
3.4.2 Plumbing
3.5 ELECTRICAL
3.5.1 PANELS
3.5.2 Controls

-- End of Section Table of Contents --

SECTION 01040

AS-BUILT DRAWINGS
5/00; Rev 11/01

PART 1 GENERAL

1.1 DEFINITIONS

The definitions listed below form a part of this specification.

1.1.1 Red-Line Drawings

Contract drawings marked-up to show actual work performed to include necessary sketches, modification drawings, shop drawings and notes. Green ink is used to indicate work deleted from the contract. Red ink is used for additions and deviations from the contract.

1.1.2 As-Built Drawings

Professional finished electronic CADD files developed from the original contract drawings that include all of the information from the redline drawings and suitable for half-size reproduction.

1.1.3 Vellum Drawings

Drawings on erasable Vellum 20# similar or equal to Xerox Zero solvent vellum.

1.1.4 Black-Line Drawings

Paper drawings reproduced from vellum drawings and suitable for microfilming.

1.1.5 Full-Size Drawings

28 inches x 40 inches nominal size drawings with all details visually readable.

1.1.6 Half-Size Drawings

14 inches x 20 inches nominal size drawings with all details visually readable.

1.1.7 Modification Circle

A circle with a horizontal line through the center. The top half will contain the letter "P" with the bottom half containing the Modification number. The lettering standard will be 120/6 WRICO or similar.

1.1.8 Mylar Drawings

Drawings on polyester film, 3 or 5 mil, similar or equal to K & E Stabilene.

1.1.9 Electronic CADD Files

Electronic CADD files are files saved on CD-ROM in accordance with appropriate CADD standard. The CADD standard will include level on/off status, special characters, line wieghts, font, and size requirements.

1.2 GENERAL REQUIREMENTS

The work includes creation of electronic cadd files on AutoCADD (version 14) as-built drawings to accurately depict existing conditions of the project. As-Built Drawings will become the permanent record drawings of the construction. The Contractor is responsible for development of electronic CADD files in accordance with Omaha DistrictCADD standards. Omaha District's CADD standards are located on the Omaha District's FTP site (ftp://ftp.nwo.usace.army.mil/pub/ED/CADD/ae/standards/ACADstd.pdf) for AutoCADD and (ftp://ftp.nwo.usace.army.mil/pub/ED/CADD/ae/standards/Caddstd.PDF) for Microstation. The As-Built drawings shall include all major features of the work and all details to the same level as the original contract set of drawings. All changes from the contract drawings, including but not limited to all deviations, additional information, and modifications to the contract. Where contract drawings or specifications allow for options, only the option selected and actually constructed shall be shown on the As-Built Drawings. Systems designed or enhanced by the Contractor such as HVAC control system, fire alarm system fire sprinkler system, irrigation sprinkler system, letters of clarification, shall be accurately and neatly recorded on the As-Built Drawings using the same symbols, terminology, and general quality as the original set of contract drawings. All sheets affected by a change shall be revised. The transmittal requirements for the As-built Drawings shall be shown as events on the Contractor prepared progress chart or network analysis system (NAS), whichever is applicable.

1.3 PAYMENT

In accordance with the clause "Payment Under Fixed - Price Construction Contracts", which provides for progress payments on estimates of work accomplished (which meets the standards of quality established under the contract), $29,750 will be withheld from payment for the creation of As-Built drawings until the final as-built drawings are delivered to the Contracting Officer (including any necessary revisions and subject to the approval of the Contracting Officer).

1.4 TRANSMITTAL OF AS-BUILT DRAWINGS

1.4.1 Preliminary As-Built Drawings

The Contractor shall produce Preliminary As-Built Drawings indicating as-built conditions on AutoCADD (Version 14.0) with "clouding". Preliminary drawings shall consist of 15% of total project drawings. The As-Built CADD files which include all changes up to the time Preliminary Drawings shall be sent as stated below. The Contractor shall draw attention to all drawing changes by "clouding" the affected area. This "clouding" will be accomplished on layer 63 of the drawing file. The Preliminary Drawings shall consist of one (1) set of CADD files on a CD and one (1) full-size set of the Black-Line Drawings. One (1) set of CADD files on a CD shall be submitted to the Omaha District Office (ATTN: CENWO-ED-DI, Jim Janicek). One (1) full-size of the Black-Line Drawings shall be submitted to the COR. Both documents shall be submitted three (3)weeks prior to the final acceptance inspection unless otherwise directed by the COR. The COR will notify the Contractor in writing of approval / disapproval. The Contractor shall not submit the Final Drawings until he

receives the COR's letter approving the Preliminary Drawings.

1.4.2 Final As-Built Drawings

The Contractor shall produce Final As-Built Drawings on AutoCADD (Version 14.0) without "clouding". The Final Drawings shall include all changes. The Final Drawings shall be submitted to the COR and Omaha District Office (CENWO-ED-DI) no earlier than the day of acceptance of the project and no later than thirty (30) days after the date on the acceptance letter for the Preliminary Drawing unless otherwise directed by the COR. (Note: Final drawings should not be forwarded to the customer. Corps of Engineers, Omaha District COR will forward to the customer after Quality Review.) One (1) set of CADD files on a CD shall be submitted to the Omaha District Office (ATTN: CENWO-ED-DI, Jim Janicek). Send the following documents to the COR: One (1) set of CADD files on CD (folder name containing as-built files shall be designated "AS-BUILTS" on each CD-ROM). Both CD case and CD shall contain the name of the project, location, specification number, and contract number, and words "As-Built Record Set"). The folder shall contain drawings, indexes and X-REF files related to all as-builts. In addition one full-size set red-lined hard copy drawings prepared by the Contractor during construction.

1.5 PROCEDURE

Within 30 days after Notice to Proceed, the Government will furnish the Contractor one full size set of contract drawings on bond paper. One (1) CD containing the contract drawings and CADD standards in AutoCADD (Version 14.0) , format for use in the preparation of As-Built Drawings by the Contractor, will be forwarded to the Resident Engineer. This CD will then be furnished to the Contractor after signed receipt to the Resident Engineer. The Contractor shall create a set of electronic Cadd files and full-size Red-Line Drawings to fully indicate As-Built conditions. The Red-Line Drawings shall be maintained at the site, in a current condition until the completion of the work and shall be available for review by the COR at all times. All as-built conditions shall be on the Red-Line Drawings within two (2) days after the work activity is completed or shall be entered on the deficiency tracking system (see Section 01451A, CONTRACTOR QUALITY CONTROL).

1.6 TITLE BLOCKS

The contract number and the specification number (if available) shall be shown on all sheets. "RECORD DRAWING" shall be added below the title block on all sheets. All modifications to the contract shall be posted in ascending order. The top line of the revision box shall state "REVISED TO SHOW AS-BUILT CONDITIONS" and dated. All modifications to all plans, sections, or details, shall have a modification number placed in the revision box under column entitled "Symbol". The statement "GENERAL REVISIONS" may be used when applicable. The date to be added in the revision box for modifications is found in Block 3 of Form SF-30.Cover Sheet will have Contract Award Set changed to As-Built Record Set with month & year completed. Month and year completed will also go in the date box in the title block. There will be no separate dates.

1.7 PROCEDURES FOR POSTING MODIFICATION CHANGES TO DRAWINGS

Follow directions in the modification for posting descriptive changes.

A Modification Circle shall be place at the location of each deletion.
The highest modification number on the sheet should be shown in the modification circle in the "DATE" and "DRAWING CODE" boxes of the title block.
For all new details or sections that are added to a drawing, place a Modification Circle by the detail or section title.

For changes to a drawing, place a Modification Circle by the title of the affected plan, section or detail titles (each location).
For changes to schedules on drawings, a Modification Circle shall be placed either by the schedule heading or by the change in the schedule.
The Modification Circle size shall be 1/2-inch diameter unless the area where circle is to be placed is crowded. Use smaller size circle for crowded areas.

1.8 WORD ABBREVIATIONS

Abbreviations shown on the abbreviation sheet shall be used to describe all work items. Additional word abbreviations, not found on the abbreviation sheet but necessary to describe the work, shall be properly identified and incorporated with the other standard word abbreviations.

1.9 LEGEND SHEETS

Symbols, which conflict with those on the original contract legend sheet, shall not be used. Additional symbols, properly identified, necessary to depict any additional work items, shall be added to the legend sheet or supplemental legend. Those projects that do not have legend sheets may use supplemental legends on each sheet where symbol is shown.

1.10 CONTRACTOR SHOP DRAWINGS

Contractor shop drawings,which supersede data on the contract plans and/or additional drawings, prepared by the Contractor, shall be incorporated into the As-Built Drawings. Design plans prepared by Contractor shall include the designer's name on the As-Built Drawings.

1.11 INDEXING OF DRAWINGS

If drawings are added to the portfolio of drawings to depict as-built conditions, the index of drawings shall be revised accordingly.

PART 2 PRODUCTS (NOT APPLICABLE)

PART 3 EXECUTION

3.1 GENERAL

As-Built drawings shall include as-built information to the same level of detail as shown on the original details, unless otherwise specified. The Contractor shall provide any additional full-size drawings as required to display all the details.

3.2 SITE WORK

3.2.1 Utilities

All utilities shall be shown whether active, inactive, shown on the original contract drawings, or found on-site. The type of utility, location, general direction, size, material make-up and depth shall be shown. The location and description of any utility line or other installations of any kind known to exist within the construction area shall be shown. The location shall include dimensions to permanent features.

3.2.2 Structures

Structures above and below ground shall be shown. The size, material make-up, location, height, and/or depth shall be shown. Manholes shall show rim elevation and invert elevations as applicable. Power poles shall show electrical equipment and voltage rating.

3.2.3 Grades

Grade or alignment of roads, structures, or utilities shall be corrected if any changes were made from the contract drawings. Elevations shall be corrected if changes were made in site grading.

3.3 STRUCTURAL

3.3.1 Steel

Shop drawings that deviate from the contract drawings shall be incorporated in the As-Built Drawings.

3.4 MECHANICAL

3.4.1 Ductwork

Ductwork shall be shown to reflect actual installation and duct size. Ductwork routing changes shall be shown.

3.4.2 Plumbing

Piping and fixtures shall be shown to reflect the type of material, size and the route or location.

3.5 ELECTRICAL

3.5.1 PANELS

All contract drawing panel schedules shall be revised to show as-built conditions. Home-run circuit designation on electrical drawings shall accurately correspond to the as-built panel schedules.

3.5.2 Controls

All control diagrams in contract drawings shall be revised to reflect as-built conditions, and setpoints.

-- End of Section --

SECTION TABLE OF CONTENTS

DIVISION 01 - GENERAL REQUIREMENTS

SECTION 01090

SOURCES FOR REFERENCE PUBLICATIONS

3/99

PART 1 GENERAL

1.1 REFERENCES
1.2 ORDERING INFORMATION

-- End of Section Table of Contents --

SECTION 01090

SOURCES FOR REFERENCE PUBLICATIONS
3/99

PART 1 GENERAL

1.1 REFERENCES

Various publications are referenced in other sections of the specifications to establish requirements for the work. These references are identified in each section by document number, date and title. The document number used in the citation is the number assigned by the sponsoring organization, e.g. UL 1 (1993; Rev thru Jan 1995) Flexible Metal Conduit. However, when the sponsoring organization has not assigned a number to a document, an identifying number has been assigned for convenience, e.g. UL's unnumbered 1995 edition of their Building Materials Directory is identified as UL-01 (1995) Building Materials Directory. The sponsoring organization number (UL 1) can be distinguished from an assigned identifying number (UL-01) by the lack of a dash mark (-) in the sponsoring organization assigned number.

1.2 ORDERING INFORMATION

The addresses of the organizations whose publications are referenced in other sections of these specifications are listed below, and if the source of the publications is different from the address of the sponsoring organization, that information is also provided. Documents listed in the specifications with numbers which were not assigned by the sponsoring organization should be ordered from the source by title rather than by number.

ACI INTERNATIONAL (ACI)

P.O. Box 9094
Farmington Hills, MI 48333-9094
Ph: 248-848-3800
Fax: 248-848-3801
Internet: http://www.aci-int.org

AGRICULTURAL MARKETING SERVICE (AMS)

Seed Regulatory and Testing Branch
USDA, AMS, LS Div.
Room 209, Bldg. 306, BARC-East
Beltsville, MD 20705-2325
Ph: 301-504-9430
Fax: 301-504-5454 Internet: http://www.ams.usda.gov/lsg/ls-sd.htm
e-mail: james_p_triplitt@usda.gov

AIR CONDITIONING AND REFRIGERATION INSTITUTE (ARI)

4301 North Fairfax Dr., Suite 425
ATTN: Pubs Dept.
Arlington, VA 22203
Ph: 703-524-8800
Fax: 703-528-3816

E-mail: ari@ari.org
Internet: www.ari.org

AIR CONDITIONING CONTRACTORS OF AMERICA (ACCA)

1712 New Hampshire Avenue, NW
Washington, DC 20009
Ph: 202-483-9370
FAX: 202-234-4721

AIR DIFFUSION COUNCIL (ADC)

104 So. Michigan Ave., No. 1500
Chicago, IL 60603
Ph: 312-201-0101
Fax: 312-201-0214

AIR MOVEMENT AND CONTROL ASSOCIATION (AMCA)

30 W. University Dr.
Arlington Heights, IL 60004-1893
Ph: 708-394-0404
Fax: 708-253-0088

ALUMINUM ASSOCIATION (AA)

Pubs Department
P.O. Box 753
Waldorf, MD 20601
Ph: 301-645-0756
Fax: 301-843-0159
Internet: www.aluminum.org

AMERICAN ARCHITECTURAL MANUFACTURERS ASSOCIATION (AAMA)

1827 Walden Ofc. Sq.
Suite 104
Schaumburg, IL 60173-4268
Ph: 847-303-5664
Fax: 847-303-5774
Internet: www.aamanet.org

AMERICAN ASSOCIATION OF STATE HIGHWAY AND TRANSPORTATION OFFICIALS (AASHTO)

444 N. Capital St., NW, Suite 249
Washington, DC 20001
Ph: 800-231-3475
Fax: 800-525-5562
Internet: www.aashto.org
NOTE: AASHTO documents with numbers beginning with M or T are available only in Standard Specifications for Transportation Materials and Methods of Samplingand Testing, 1998 @$289.00\X

AMERICAN ASSOCIATION OF TEXTILE CHEMISTS AND COLORISTS (AATCC)

P.O. Box 12215
1 Davis Drive

Research Triangle Park, NC 27709-2215
Ph: 919-549-8141
Fax: 919-549-8933

AMERICAN BEARING MANUFACTURERS ASSOCIATION (ABEMA)

1200 19th Street, NW, Suite 300
Washington, DC 20036-4303
Ph: 202-429-5155
Fax: 202-223-4579

AMERICAN BOILER MANUFACTURERS ASSOCIATION (ABMA)

950 N. Glebe Rd., Suite 160
Arlington, VA 22203-1824
Ph: 703-522-7350
Fax: 703-522-2665

AMERICAN CONCRETE PIPE ASSOCIATION (ACPA)

222 West Las Colinas Blvd., Suite 641
Irving, TX 75039-5423
Ph: 972-506-7616
Fax: 972-506-7682
Internet: http://www.concrete-pipe.org
e-mail: info@concrete-pipe.org

AMERICAN CONFERENCE OF GOVERNMENTAL INDUSTRIAL HYGIENISTS (ACGIH)

1330 Kemper Meadow Dr.
Cincinnati, OH 45240-1634
Ph: 513-742-2020
Fax: 513-742-3355
Internet: www.acgih.org
E-mail: pubs@acgih.org

AMERICAN FOREST & PAPER ASSOCIATION (AF&PA)

American Wood Council
ATTN: Publications Dept.
1111 Nineteenth St. NW, Suite 800
Washington, DC 20036
Ph: 800-294-2372
Fax: 202-463-2791
Internet: http://www.afandpa.org
Order From: American Wood Council
P.O. Box 5364
Madison, WI 53705-5364
Ph: 800-890-7732
Fax: 608-231-2152

AMERICAN GAS ASSOCIATION (AGA)

Order from: AGA Distribution Center
P.O. Box 79230
Baltimore, MD 21279-0230
Ph: 301-617-7819
Fax: 301-206-9789

AMERICAN GEAR MANUFACTURERS ASSOCIATION (AGMA)

1500 King St., Suite 201
Alexandria, VA 22314-2730
Ph: 703-684-0211
Fax: 703-684-0242
Order From:
Global Engineering Documents
15 Inverness Lane East
Englewood, CO 80112
Ph: 800-854-7179
Fax: 303-397-2740

AMERICAN HARDBOARD ASSOCIATION (AHA)

1210 W. Northwest Highway
Palatine, IL 60067
Ph: 847-934-8800
Fax: 847-934-8803

AMERICAN INDUSTRIAL HYGIENE ASSOCIATION (AIHA)

2700 Prosperity Ave., Suite 250
Fairfax, VA 22031
Ph: 703-849-8888
Fax: 703-207-3561
Internet: http://www.aiha.org
E-mail: www.aiscweb.com

AMERICAN INSTITUTE OF STEEL CONSTRUCTION (AISC)

One East Wacker Dr., Suite 3100
Chicago, IL 60601-2001
Ph: 312-670-2400
Publications: 800-644-2400
Fax: 312-670-2400
Internet: http://www.aiscweb.com

AMERICAN INSTITUTE OF TIMBER CONSTRUCTION (AITC)

7012 So. Revere Parkway, Suite 140
Englewood, CO 80112
Ph: 303-792-9559
Fax: 303-792-0669

AMERICAN IRON AND STEEL INSTITUTE (AISI)

ATTN: Publication Orders
P.O. Box 4321
Chestertown, MD 21690
Ph: 800-277-3850
Fax: 410-810-0910

AMERICAN NATIONAL STANDARDS INSTITUTE (ANSI)

11 West 42nd St
New York, NY 10036
Ph: 212-642-4900
Fax: 212-398-0023

Internet: www.ansi.org/
Note: Documents beginning with the letter "S" can be ordered from:
Acoustical Society of America
P. O. Box 1020
Sweickley, PA 15143-9998
Ph: 412-741-1979
Fax: 412-741-0609
Internet: www.aip.org

AMERICAN NURSERY AND LANDSCAPE ASSOCIATION (ANLA)

1250 I St., NW, Suite 500
Washington, DC 20005
Ph: 202-789-2900 Ext 3010
FAX: 202-789-1893

AMERICAN PETROLEUM INSTITUTE (API)

1220 L St., NW
Washington, DC 20005
Ph: 202-682-8375
Fax: 202-962-4776
Internet: http://www.api.org

AMERICAN RAILWAY ENGINEERING & MAINTENANCE-OF-WAY ASSOCIATION (AREMA)

8201 Corporate Dr., Suite 1125
Landover, MD 20785
Ph: 301-459-3200
Fax: 301-459-8077

AMERICAN SOCIETY FOR NONDESTRUCTIVE TESTING (ASNT)

1711 Arlingate Lane
P.O. Box 28518
Columbus, OH 43228-0518
Ph: 800-222-2768
Fax: 614-274-6899

AMERICAN SOCIETY FOR TESTING AND MATERIALS (ASTM)

100 Barr Harbor Drive
West Conshohocken, PA 19428-2959
Ph: 610-832-9500
Fax: 610-832-9555
Internet: www.astm.org
NOTE: The annual ASTM Book of Standards (66 Vol) is available for $3500.00. Prices of individual standards vary.

AMERICAN SOCIETY OF CIVIL ENGINEERS (ASCE)

1801 Alexander Bell Drive
Reston, VA 20190-4400
Ph: 800-548-2723
Fax: 703-295-6333
Internet: www.pubs.asce.org
e-mail: marketing@asce.org

AMERICAN SOCIETY OF HEATING, REFRIGERATING AND AIR-CONDITIONING ENGINEERS (ASHRAE)

1791 Tullie Cir., NE
Atlanta, GA 30329-2305
Ph: 800-527-4723 or 404-636-8400
Fax: 404-321-5478
Internet: http://www.ashrae.org

AMERICAN SOCIETY OF SANITARY ENGINEERING FOR PLUMBING AND SANITARY RESEARCH (ASSE)

P.O. Box 40362
Bay Village, OH 44140
Ph: 216-835-3040
Fax: 216-835-3488
E-mail: asse@ix.netcom.com

AMERICAN WATER WORKS ASSOCIATION(AWWA)

6666 West Quincy
Denver, CO 80235
Ph: 800-926-7337
Fax: 303-795-1989
Internet: www.awwa.org

AMERICAN WELDING SOCIETY (AWS)

550 N.W. LeJeune Road
Miami, FL 33126
Ph: 305-443-9353
Fax: 305-443-7559
Internet: http://www.amweld.org

AMERICAN WOOD-PRESERVERS' ASSOCIATION (AWPA)

3246 Fall Creek Highway, Suite 1900
Grandbury, TX 76049-7979
Ph: 817-326-6300
Fax: 817-326-6306
NOTE: AWPA Book of Standards is published yearly @$75.00; individual standards may be ordered separately for $12.00 to $28.00 each.

APA - THE ENGINEERED WOOD ASSOCIATION (APA)

2130 Barrett Park Dr., Suite 102
Kennesaw, GA 30144-3681
Ph: 770-427-9371
Fax: 770-423-1703
Internet: www.apawood.org
Note: Prices are available only by calling APA

ARCHITECTURAL WOODWORK INSTITUTE (AWI)

1952 Isaac Newton Square
Reston, VA 20190
Ph: 703-733-0600
Fax: 703-733-0584

Internet: www.awinet.org

ASBESTOS CEMENT PIPE PRODUCERS ASSOCIATION (ACPPA)

1745 Jefferson Davis Highway, Suite 406
Arlington, VA 22202
Ph: 703-412-1153
Fax: 703-412-1152

ASME INTERNATIONAL (ASME)

Three Park Avenue
New York, NY 10016-5990
Ph: 212-591-7000
Fax: 212-591-7674
Internet: www.asme.org

ASPHALT INSTITUTE (AI)

Research Park Dr.
P.O. Box 14052
Lexington, KY 40512-4052
Ph: 606-288-4960
Fax: 606-288-4999
Internet: www.asphaltinstitute.org
e-mail: asphalti@asphaltinstitute.org

ASSOCIATED AIR BALANCE COUNCIL (AABC)

1518 K St., NW, Suite 503
Washington, DC 20005
Ph: 202-737-0202
Fax: 202-638-4833

ASSOCIATION FOR THE ADVANCEMENT OF MEDICAL INSTRUMENTATION (AAMI)

3330 Washington Blvd., Suite 400
Arlington, VA 22201-4598
Ph: 703-525-4890
Fax: 703-276-0793
Internet: www.aami.org

ASSOCIATION OF EDISON ILLUMINATING COMPANIES (AEIC)

600 No. 18th St.
P.O. Box 2641
Birmingham, AL 35291-0992
Ph: 205-257-2530
Fax: 205-257-2540
Internet: http://www.aeic.org/index.htm
E-Mail: veazey-white@apc.com

ASSOCIATION OF HOME APPLIANCE MANUFACTURERS (AHAM)

20 No. Wacker Dr., Suite 1500
Chicago, IL 60606
Ph: 312-984-5800
Fax: 312-984-5823
Internet: http://www.aham.org

ASSOCIATION OF IRON AND STEEL ENGINEERS (AISE)

Three Gateway Center, Suite 2350
Pittsburg, PA 15222
Ph: 412-281-6323

BIFMA INTERNATIONAL (BIFMA)

2680 Horizon Drive SE, Suite A-1
Grand Rapids, MI 49546-7500
Ph: 616-285-3963
Fax: 616-285-3765
Internet: www.bifma.com
E-mail: email@bifma.com

BRICK INSTITUTE OF AMERICA (BIA)

11490 Commerce Park Dr., Suite 308
Reston, VA 22091
Ph: 703-620-0010
Fax: 703-620-3928

BUILDERS HARDWARE MANUFACTURERS ASSOCIATION (BHMA)

355 Lexington Ave. New York, NY 10017-6603
Ph: 212-661-4261
Fax: 212-370-9047
Internet: www.buildershardware.com

BUILDING OFFICIALS & CODE ADMINISTRATORS INTERNATIONAL (BOCA)

4051 W. Flossmoor Rd.
Country Club Hills, IL 60478-5795
Ph: 708-799-2300
Fax: 708-799-4981
E-mail: boca@aecnet.com

BUREAU OF RECLAMATION (BOR)

Dept. of the Interior
P.O. Box 25007
Denver, CO 80225
Ph: 303-236-0305, ext. 457
Order from:
National Technical Information
Services (NTIS)
5285 Port Royal Rd.
Springfield, VA 22161
Ph: 800-553-6847
Fax: 703-321-8547
Internet: http://www.fedworld.gov/ntis/ntishome.html

CALIFORNIA DEPARTMENT OF TRANSPORTATION (CDT)

Publication Distribution Unit
1900 Royal Oaks Dr.
Sacramento, CA 95815
Ph: 916-445-3520 or 916-227-7000 (CA Transportation Lab)

Fax: 916-324-8997

CALIFORNIA REDWOOD ASSOCIATION (CRA)

405 Enfrente Ave., Suite 200
Novato, CA 94949
Ph: 415-382-0662
Fax: 415-382-8531

CANADIAN ELECTRICITY ASSOCIATION (CEA)

1 Westmount Square, Suite 1600
Montreal, Quebec, Canada H3Z 209
Ph: 514-937-6181
Fax: 514-937-6498
Internet: www.canelect.ca
e-mail: info@canelect.ca

CARPET AND RUG INSTITUTE (CRI)

310 Holiday Ave.
P.O. Box 2048
Dalton, GA 30722-2048
Ph: 706-278-0232
Fax: 706-278-8835
Internet: carpet-rug.com

CAST IRON SOIL PIPE INSTITUTE (CISPI)

5959 Shallowford Rd., Suite 419
Chattanooga, TN 37421
Ph: 423-892-0137
Fax: 423-892-0817

CEILINGS & INTERIOR SYSTEMS CONSTRUCTION ASSOCIATION (CISCA)

1500 Lincoln Highway, Suite 202
St. Charles, IL 60174
Ph: 708-584-1919
Fax: 708-584-2003

CHLORINE INSTITUTE (CI)

2001 L St., NW
Washington, DC 20036
Ph: 202-775-2790
Fax: 202-223-7225

CODE OF FEDERAL REGULATIONS (CFR)

Order from:
Government Printing Office
Washington, DC 20402
Ph: 202-512-1800
Fax: 202-275-7703
Internet: http://www.pls.com:8001/his/cfr.html

COMMERCIAL ITEM DESCRIPTIONS (CID)

Order from:
General Services Administration
Federal Supply Service Bureau
470 E L'Enfant Plaza, S.W.
Washington, DC 20407
Ph: 202-619-8925
Internet: http://pub.fss.gsa.gov/h1-pub.html

COMPRESSED GAS ASSOCIATION (CGA)

1725 Jefferson Davis Highway, Suite 1004
Arlington, VA 22202-4102
Ph: 703-412-0900
Fax: 703-412-0128
Internet: www.cganet.com
e-mail: Customer_Service@cganet.com

CONCRETE REINFORCING STEEL INSTITUTE (CRSI)

933 No. Plum Grove Rd.
Schaumburg, IL 60173-4758
Ph: 847-517-1200
Fax: 847-517-1206
Internet: http://www.crsi.org

CONSUMER PRODUCT SAFETY COMMISSION (CPSC)

Washington, DC 20207
Ph: 301-504-0580

CONVEYOR EQUIPMENT MANUFACTURERS ASSOCIATION (CEMA)

9384-D Forestwood Lane
Manassas, VA 22110
Ph: 703-330-7079
Fax: 703-330-7984

COOLING TOWER INSTITUTE (CTI)

P.O. Box 73383
Houston, TX 77273
Ph: 281-583-4087
Fax: 281-537-1721

COPPER DEVELOPMENT ASSOCIATION (CDA)

260 Madison Ave.
New York, NY 10016
Ph: 212-251-7200
Fax: 212-251-7234
E-mail: http://www.copper.org

CORPS OF ENGINEERS (COE)

Order from:
U.S. Army Engineer Waterways Experiment Station
ATTN: Technical Report Distribution Section, Services Branch, TIC
3909 Halls Ferry Rd.

Vicksburg, MS 39180-6199
Ph: 601-634-2571
Fax: 601-634-2506
NOTE: COE Handbook for Concrete and Cement (Documents w/prefix CRD-C) (1949-present; 2 Vol) free to Government offices; $10.00 plus $8.00 per yr for 4 qtrly supplements to others). Individual documents, single copies free. Order from address above.

COUNCIL OF AMERICAN BUILDING OFFICIALS (CABO)

5203 Leesburg Pike, Suite 708
Falls Church, VA 22041
Ph: 703-931-4533
Fax: 703-379-1546

DEPARTMENT OF AGRICULTURE (USDA)

14TH STREET & INDEPENDENCE AVE. S.W.
WASHINGTON, D.C. 20250
Ph: (202) 720-2791
Publications: 301-344-2340

DEPARTMENT OF COMMERCE (DOC)

Order From:
National Technical Information Service
5285 Port Royal Road
Springfield, VA 22161
Ph: 703-487-4600
Fax: 703-321-8547
Internet: http://www.ntis.gov

DEPARTMENT OF DEFENSE (DOD)

Order from:
National Technical Information Service
5285 Port Royal Road
Springfield, VA 22161
Ph: 703-487-4650
FAX: 703-321-8547

DEPARTMENT OF HOUSING AND URBAN DEVELOPMENT (HUD)

Order from:
HUD User
P.O. Box 6091
Rockville, MD 20850
Ph: 800-245-2691
e-mail: Huduser@aspensys.com

DEPARTMENT OF STATE (SD)

ATTN: DS/PSP/SEP
SA-6, Room 804
Washington, DC 20522-0602
Ph: 703-875-6537

DOOR AND ACCESS SYSTEM MANUFACTURERS ASSOCIATION (DASMA)

1300 Sumner Avenue
Cleveland, OH 44115-2851
Ph: 216-241-7333
Fax: 216-241-0105
Internet: www.taol.com/dasma
e-mail: dasma@taol.com

DOOR AND HARDWARE INSTITUTE (DHI)

14170 Newbrook Dr.
Chantilly, VA 20151-2232
Ph: 703-222-2010
Fax: 703-222-2410
Internet: www.dhi.org
E-mail: techdept@dhi.org

DUCTILE IRON PIPE RESEARCH ASSOCIATION (DIPRA)

245 Riverchase Parkway East, Suite 0
Birmingham, AL 35244-1856
Ph: 205-988-9870
Fax: 205-988-9822
Internet: www.dipra.org
E-mail: info@dipra.org

EIFS INDUSTRY MEMBERS ASSOCIATION (EIMA)

402 No. 4th St., Suite 102
Yakima, WA 98901-2470
Ph. 509-457-3500
Fax: 509-457-0169

ELECTRONIC INDUSTRIES ASSOCIATION (EIA)

2500 Wilson Blvd.
Arlington, VA 22201-3834
Ph: 703-907-7500
Fax: 703-907-7501
Internet: www.eia.org
Order Publications from:
Global Engineering Documents
15 Inverness Lane East
Englewood, CO 80112
Ph: 800-854-7179
Fax: 303-397-2740
Internet: http://global.ihs.com

ENGINEERING MANUALS (EM)

USACE Publications Depot
Attn: CEIM-SP-D
2803 52nd Avenue
Hyattsville, MD 20781-1102
Ph: 301-394-0081

ENGINEERING PAMPHLETS (EP)

USACE Publications Depot
Attn: CEIM-SP-D

2803 52nd Avenue
Hyattsville, MD 20781-1102
Ph: 301-394-0081

ENGINEERING REGULATIONS (ER)

USACE Publications Depot
Attn: CEIM-SP-D 2803 52nd Avenue
Hyattsville, MD 20781-1102
Ph: 301-394-0081

ENVIRONMENTAL PROTECTION AGENCY (EPA)

Public Information Center
401 M St., SW
Washington, DC 20460
Ph: 800-490-9198
FAX: 202-260-6257
Internet: http://www.epa.gov
NOTE: Some documents are available only from: National Technical Information Services (NTIS)
5285 Port Royal Rd.
Springfield, VA 22161
Ph: 800-553-6847
Fax: 703-321-8547
Internet: http://www.fedworld.gov/ntis/ntishome.html

EXPANSION JOINT MANUFACTURERS ASSOCIATION (EJMA)

25 No. Broadway
Tarrytown, NY 10591
Ph: 914-332-0040

FACTORY MUTUAL ENGINEERING AND RESEARCH (FM)

1151 Boston-Providence Turnpike
P.O. Box 9102
Norwood, MA 02062-9102
Ph: 617-255-4681
Fax: 617-255-4359
Internet: http://www.factorymutual.com

FEDERAL AVIATION ADMINISTRATION (FAA)

Order from:
Superintendant of Documents
U. S. Government Printing Office
Washington, DC 20402
Ph: 202-512-1800
Fax: 202-512-1356
For free documents, order from:
Federal Aviation Administration
Dept. of Transportation
ATTN: General Services Section M-45
400 Seventh St., SW
Washington, DC 20590-0001
Ph: 202-619-8925
Fax: 202-619-8978
Internet: www.faa.gov

FEDERAL HIGHWAY ADMINISTRATION (FHWA)

Office of Highway Safety (HHS-31)
400 Seventh St., SW
Washington, DC 20590-0001
Ph: 202-366-0411
Fax: 202-366-2249
Order from:
Government Printing Office
Superintendent of Documents
Washington, DC 20402
Ph: 202-783-3238

FEDERAL SPECIFICATIONS (FS)

Order from:
General Services Administration
Federal Supply Service Bureau
470 L'Enfant Plaza, S.W.
Washington, DC 20407
Ph: 202-619-8925
Fax: 202-619-8978
Internet: http://pub.fss.gsa.gov/

FEDERAL STANDARDS (FED-STD)

Order from:
General Services Administration
Federal Supply Service Bureau
470 E L'Enfant Plaza, S.W.
Washington, DC 20407
Ph: 202-619-8925
Fax: 202-619-8978
Internet: http://pub.fss.gsa.gov/

FORESTRY SUPPLIERS (FSUP)

205 West Rankin St.
Jackson, MS 39201
Ph: 800-647-5368
Fax: 800-543-4203
Internet: www.forestry-suppliers.com

FOUNDATION FOR CROSS-CONNECTION CONTROL AND HYDRAULIC RESEARCH (FCCCHR)

USC
KAP-200 University Park MC-2531
Los Angeles, CA 90089-2531
Ph: 213-740-2032
Fax: 213-740-8399

GEOLOGICAL SOCIETY OF AMERICA (GSA)

P.O. Box 9140
Boulder, CO 80301
Ph: 800-472-1988
Fax: 303-447-1133

GEOSYNTHETIC INSTITUTE (GSI)

475 Kedron Ave.
Folsom, PA 19033-1208
Ph: 610-522-8440
Fax: 610-522-8441

GERMANY INSTITUTE FOR STANDARDIZATION (DIN)

Order from:
Global Engineering Documents
15 Inverness Lane East
Englewood, CO 80112
Ph: 800-854-7179
Fax: 303-397-7238

GLASS ASSOCIATION OF NORTH AMERICA (GANA)

3310 S.W. Harrison St.
Topeka, KS 66611-2279
Ph: 913-266-7013
Fax: 913-266-0272
Internet:www.cssinfo.com/info/gana.html

GRETAG MACBETH (GM)

Munsell Department
ATTN: Customer Service
617 Little Britain Road
New Windsor, NY 12553-6184
Ph: 800-662-2384 or 914-566-7660, Ext 347
Fax: 914-561-0267
Internet: http://www.munsell.com/munsell5.htm

GYPSUM ASSOCIATION (GA)

810 First St. NE, Suite 510
Washington, DC 20002
Ph: 202-289-5440
Fax: 202-289-3707

HARDWOOD PLYWOOD & VENEER ASSOCIATION (HPVA)

1825 Michael Faraday Dr.
P.O. Box 2789
Reston, VA 22090-2789
Ph: 202-435-2900
Fax: 703-435-2537

HEAT EXCHANGE INSTITUTE (HEI)

1300 Sumner Ave
Cleveland, OH 44115-2851
Ph: 216-241-7333
Fax: 216-241-0105

H.P. WHITE LABORATORY (HPW)

3114 Scarboro Rd.
Street, MD 21154
Ph: 410-838-6550

HYDRAULIC INSTITUTE (HI)

9 Sylvan Way, Suite 180
Parsippany, NJ 07054-3802
Ph: 888-786-7744 or 973-267-9700
Fax: 973-267-9053

HYDRONICS INSTITUTE DIVISION OF GAMA (HYI)

35 Russo Pl.
P.O. Box 218
Berkeley Heights, NJ 07922-0218
Ph: 908-464-8200
Fax: 908-464-7818
Internet: www.gamanet.org

IBM CORPORATION (IBM)

Publications
P.O. Box 29570
Raleigh, NC 27626-0570
Ph: 800-879-2755, Option 1
Fax: 800-445-9269
Internet: www.ibmink.ibm.com

ILLUMINATING ENGINEERING SOCIETY OF NORTH AMERICA (IESNA)

120 Wall St., 17th Floor
New York, NY 10005-4001
Ph: 212-248-5000
Fax: 212-248-5017
Internet: www.iesna.org

INDUSTRIAL FASTENERS INSTITUTE (IFI)

1717 East 9th St., Suite 1105
Cleveland, OH 44114-2879
Ph: 216-241-1482
Fax: 216-241-5901
Internet: http://www.industrial-fasteners.org
e-mail: indfast@aol.com

INSECT SCREENING WEAVERS ASSOCIATION (ISWA)

P.O. Box 1018
Ossining, NY 10562
Ph: 914-962-9052
Fax: 914-923-3031

INSTITUTE FOR INTERCONNECTING AND PACKAGING ELECTRONIC CIRCUITS (IPC)

2215 Sanders Rd.
Northbrook, IL 60062-6135

Ph: 847-509-9700
Fax: 847-509-9798
Internet: www.ipc.org
e-mail: orderipc@ipc.org

INSTITUTE OF CLEAN AIR COMPANIES (ICAC)

1660 L St., NW, Suite 1100
Washington, DC 20036-5603
Ph: 202-457-0911
Fax: 202-331-1388
E-mail: sjenkins@icac.com
Internet: icac.com

INSTITUTE OF ELECTRICAL AND ELECTRONICS ENGINEERS (IEEE)

445 Hoes Ln, P. O. Box 1331
Piscataway, NJ 08855-1331
Ph: 732-981-0060 OR 800-701-4333
Fax: 732-981-9667
Internet: http//standards.ieee.org
E-mail: customer.service@ieee.org
Note: Documents may also be ordered from:
Global Engineering Documents
15 Inverness Way East
Englewood, CO 80112
Ph: 800-854-7179
Fax:303-397-2740
Internet: global.ihs.com

INSTITUTE OF ENVIRONMENTAL SCIENCES (IES)

940 East Northwest Highway
Mount Prospect, IL 60056
Ph: 847-255-1561
Fax: 847-255-1699

INSULATED CABLE ENGINEERS ASSOCIATION (ICEA)

P.O. Box 440
South Yarmouth, MA 02664
Ph: 508-394-4424
Fax: 508-394-1194
E-mail: www.electricnet.com/orgs/insucbl.htm

INTERNATIONAL APPROVAL SERVICES (IAS)

8501 East Pleasant Valley Rd.
Cleveland, OH 44131
Ph: 216-524-4990
Fax: 216-642-3463
Internet: www.iasapprovals.org

INTERNATIONAL ASSOCIATION OF PLUMBING AND MECHANICAL OFFICIALS (IAPMO)

20001 Walnut Dr., So.
Walnut, CA 91789-2825
Ph: 909-595-8449

Fax: 909-594-3690
Fax for Stds: 909-594-5265
Internet: www.iapmo.org

INTERNATIONAL CONFERENCE OF BUILDING OFFICIALS (ICBO)

5360 Workman Mill Rd.
Whittier, CA 90601-2298
Ph: 310-699-0541
Fax: 310-692-3853

INTERNATIONAL ELECTROTECHNICAL COMMISSION (IEC)

3, rue de Varembe, Case Postale 131
CH-1211 Geneva 20, Switzerland
Ph: 41-22-919-0211
Fax: 41-22-919-0300
Internet: http://www.iec.ch
e-mail: custserv@iec.ch

INTERNATIONAL INSTITUTE OF AMMONIA REFRIGERATION (IIAR)

1200 Nineteenth St., NW, Suite 300
Washington, DC 20036-2912
Ph: 202-857-1110
Fax: 202-223-4579

INTERNATIONAL MUNICIPAL SIGNAL ASSOCIATION (IMSA)

165 East Union St. P.O. Box 539
Newark, NY 14513
Ph: 315-331-2182
Fax: 315-331-8505

INTERNATIONAL ORGANIZATION FOR STANDARDIZATION (ISO)

Internet: www.iso.ch
Order Publications from:
Global Engineering Documents
15 Inverness Lane East
Englewood, CO 80112
Ph: 800-854-7179
Fax: 303-397-7238
Internet: http://global.ihs.com

INTERNATIONAL SLURRY SURFACING ASSOCIATION (ISSA)

1200 Nineteenth St., NW, Suite 300
Washington, DC 20036-2401
Ph: 202-857-1160
Fax: 202-223-4579
Internet: http://www.rochester.edu/issa/

INTERNATIONAL TELECOMMUNICATION UNION (ITU)

Order from:
U.S. Dept of Commerce
National Technical Information Service
585 Port Royal Road.

Springfield, VA 22161
Ph: 703-487-4660
FAX: 703-321-8547
For documents not avail from Dept of Commerce:
E-Mail: sales@itu.ch
Fax: 41.22.730.5194

IRON & STEEL SOCIETY (ISS)

410 Commonwealth Dr.
Warrendale, PA 15086-7512
Ph: 412-776-1535, ext. 1
Fax: 412-776-0430
E-Mail: custserv @ issource.org
Internet: www.issourse.org

ISA (ISA)

67 Alexander Drive
P.O. Box 12277
Research Triangle Park, NC 27709
Ph: 919-549-8411
Fax: 919-549-8288
e-mail: ISA@isa.org
Internet: http://www.isa.org

KITCHEN CABINET MANUFACTURERS ASSOCIATION (KCMA)

1899 Preston White Dr.
Reston, VA 20191-5435
Ph: 703-264-1690
Fax: 703-620-6530
Internet: www.kcma.org

MANUFACTURERS STANDARDIZATION SOCIETY OF THE VALVE AND FITTINGS INDUSTRY (MSS)

127 Park St., NE
Vienna, VA 22180-4602
Ph: 703-281-6613
Fax: 703-281-6671
Internet: //cssinfo.com/info/mss/html

MAPLE FLOORING MANUFACTURERS ASSOCIATION (MFMA)

60 Revere Dr., Suite 500
Northbrook, IL 60062
Ph: 847-480-9138
Fax: 847-480-9282
e-mail: mfma@maplefloor.com

MARBLE INSTITUTE OF AMERICA (MIA)

33505 State St.
Farmington, MI 48335
Ph: 810-476-5558
Fax: 810-476-1630

MATERIAL HANDLING INDUSTRY (MHI)

8720 Red Oak Blvd., Suite 201
Charlotte, NC 28217-3992
Ph: 800-345-1815 or 704-522-9644
Fax: 704-522-7826

METAL BUILDING MANUFACTURERS ASSOCIATION (MBMA)

1300 Sumner Ave.
Cleveland, OH 44115-2851
Ph: 216-241-7333
Fax: 216-241-0105

MIDWEST INSULATION CONTRACTORS ASSOCIATION (MICA)

2017 So. 139th Cir.
Omaha, NE 68144
Ph: 402-342-3463
Fax: 402-330-9702

MILITARY HANDBOOKS (MIL-HDBK)

Order from:
Standardization Documents Order Desk
Bldg 4D
700 Robbins AV
Philadelphia, PA 19111-5094
Ph: 215-697-2179
Fax: 215-697-2978
Internet: www.dodssp.daps.mil

MILITARY SPECIFICATIONS (MS)

Order from:
Standardization Documents Order Desk
Building 4, Section D
700 Robbins Ave.
Philadelphia, PA 19111-5094
Ph: 215-697-2179
Fax: 215-697-2978
Internet: www.dodssp.daps.mil

MILITARY STANDARDS (MIL-STD)

Order from:
Standardization Documents Order Desk
Building 4, Section D
700 Robbins Ave.
Philadelphia, PA 19111-5094
Ph: 215-697-2179
Fax: 215-697-2978
Internet: www.dodssp.daps.mil

NACE INTERNATIONAL (NACE)

1440 South Creek Drive
Houston, TX 77084-4906
Ph: 281-228-6200
Fax: 281-228-6300

Internet: www.nace.org

NATIONAL ASSOCIATION OF ARCHITECTURAL METAL MANUFACTURERS (NAAMM)

8 So. Michigan Ave, Suite 100
Chicago, IL 60603
Ph: 312-782-4951
Internet: www.naam.org

NATIONAL ASSOCIATION OF PLUMBING-HEATING-COOLING CONTRACTORS (NAPHCC)

180 S. Washington Street
P.O. Box 6808
Falls Church, VA 22046
Ph: 800-533-7694
Fax: 703-237-7442

NATIONAL BOARD OF BOILER AND PRESSURE VESSEL INSPECTORS (NBBPVI)

1055 Crupper Ave.
Columbus, OH 43229-1183
Ph: 614-888-2463
Fax: 614-847-1147
e-mail: orders @ nationalboard.org

NATIONAL CABLE TELEVISION ASSOCIATION (NCTA)

1724 Massachusetts Ave. NW
Washington, DC 20036-1969
Ph: 202-775-3550
Fax: 202-775-3698

NATIONAL COUNCIL ON RADIATION PROTECTION AND MEASUREMENTS (NCRP)

7910 Woodmont Ave., Suite 800
Bethesda, MD 20814-3095
Ph: 800-229-2652
Fax: 301-907-8768

NATIONAL DRILLING ASSOCIATION (NDA)

3008 Millwood Avenue
Columbia, SC 29205
Ph: 800-445-8629
Fax: 803-765-0860

NATIONAL ELECTRICAL MANUFACTURERS ASSOCIATION (NEMA)

1300 N. 17th St., Suite 1847
Rosslyn, VA 22209
Ph: 703-841-3200
Fax: 202-457-8473
Internet: http//www.nema.org/
Order Publications from:
Global Engineering Documents
15 Inverness Way East
Englewood, CO 80112-5776

Ph: 800-264-3974
Fax: 303-397-7935
Internet: http://global.ihs.com

NATIONAL ENVIRONMENTAL BALANCING BUREAU (NEBB)

8575 Grovemont Circle
Gaithersburg, MD 20877-4121
Ph: 301-977-3698
Fax: 301-977-9589

NATIONAL FIRE PROTECTION ASSOCIATION (NFPA)

One Batterymarch Park P.O. Box 9101
Quincy, MA 02269-9101
Ph: 800-344-3555
Fax: 800-593-6372
Internet: http://www.nfpa.org
NOTE: The complete set of 1997 NFPA National Fire Codes (13 Vol.) is available for $835.00.

NATIONAL FLUID POWER ASSOCIATION (NFLPA)

3333 No. Mayfair Rd.
Milwaukee, WI 53222-3219
Ph: 414-778-3363
Fax: 414-778-3361
Internet: www.nfpa.com
E-mail: nfpa@nfpa.com

NATIONAL HARDWOOD LUMBER ASSOCIATION (NHLA)

P.O. Box 34518
Memphis, TN 38184-0518
Ph: 901-377-1818
Fax: 901-382-6419
e-mail: nhla@natlhardwood.org

NATIONAL INSTITUTE FOR CERTIFICATION IN ENGINEERING TECHNOLOGIES (NICET)

1420 King Street
Alexandria, VA 22314-2794
Ph: 888-476-4238
Internet: www.nicet.org

NATIONAL INSTITUTE FOR OCCUPATIONAL SAFETY AND HEALTH (NIOSH)

Mail Stop C-13
4676 Columbia Parkway
Cincinnati, OH 45226-1998
Ph: 800-356-4676
Internet: http://www.cdc.gov/niosh/homepage.html
To order pubs for which a fee is charged, order from:
Superintendent of Documents
Government Printing Office
Washington, DC 20402-9325
Ph: 202-512-1800
Fax: 202-512-2250

NATIONAL INSTITUTE OF JUSTICE (NIJ)

National Law Enforcement and Corrections Technology Center
2277 Research Blvd. - Mailstop 1E
Rockville, MD 20850
Ph: 800-248-2742 or 301-519-5060
Fax: 301-519-5179
Internet: http://www.nlectc.org
e-mail: nlectc@aspensys.com

NATIONAL INSTITUTE OF STANDARDS AND TECHNOLOGY (NIST)

Department of Commerce
Gaithersburg, MD 20899-0001
Ph: 301-975-4025
Fax: 301-926-1630
Order Publications From:
Superintendent of Documents
U.S. Government Printing Office (GPO)
Washington, DC 20402
Ph: 202-512-1800
Fax: 202-512-2250
or
National Technical Information Services (NTIS)
5285 Port Royal Rd.
Springfield, VA 22161
Ph: 800-553-6847
Fax: 703-321-8547
Internet: http://ww.gov/ntis.gov

NATIONAL LIME ASSOCIATION (NLA)

200 No. Glebe Rd., Suite 800
Arlington, VA 22203-3728
Ph: 703-243-5463
Fax: 703-243-5489

NATIONAL OAK FLOORING MANUFACTURERS ASSOCIATION (NOFMA)

P.O. Box 3009
Memphis, TN 38173-0009
Ph: 901-526-5016
Fax: 901-526-7022

NATIONAL READY-MIXED CONCRETE ASSOCIATION (NRMCA)

900 Spring St.
Silver Spring, MD 20910
Ph: 301-587-1400
Fax: 301-585-4219

NATIONAL ROOFING CONTRACTORS ASSOCIATION (NRCA)

P.O. Box 809261
Chicago, IL 60680-9261
Ph: 800-323-9545
Fax: 708-299-1183

NATIONAL TERRAZZO & MOSAIC ASSOCIATION (NTMA)

3166 DesPlaines Ave., Suite 132
DesPlaines, IL 60018
Ph: 708-635-7744
Fax: 708-635-9127

NATIONAL WOOD WINDOW & DOOR ASSOCIATION (NWWDA)

1400 East Touhy Ave., Suite G-54
Des Plaines, IL 60018
Ph: 847-299-5200
Fax: 708-299-1286

NAVAL FACILITIES ENGINEERING COMMAND (NAVFAC)

1510 Gilbert St.
Norfolk, VA 23511-2699
Ph: 757-322-4200
Fax: 757-322-4416

NAVAL FACILITIES ENGINEERING SERVICE CENTER (NFESC)

560 Center Drive
Port Hueneme, CA 93043-4328
Ph: 805-982-9110

NORTH AMERICAN INSULATION MANUFACTURERS ASSOCIATION (NAIMA)

44 Canal Center Plaza, Suite 310
Alexandria, VA 22314
Ph: 703-684-0084

NORTHEASTERN LUMBER MANUFACTURERS ASSOCIATION (NELMA)

P.O. Box 87A
Cumberland Center, ME 04021
Ph: 207-829-6901
Fax: 207-829-4293

NORTHEAST REGIONAL AGRICULTURAL ENGINEERING SERVICE (NRAES)

Cooperative Extension
152 Riley-Robb Hall
Ithaca, NY 14853-5701
Ph: 607-255-7654
Fax: 607-254-8770
Internet: http://rcwpsun.cas.psu.edu/nraes
E-mail: nraes@cornell.edu

NSF INTERNATIONAL (NSF)

ATTN: Publications
P.O. Box 130140
Ann Arbor, MI 48113-0140
Ph: 313-913-5744
Fax: 313-769-0109
Internet: www.nsf.org

PIPE FABRICATION INSTITUTE (PFI)

P.O. Box 173
Springdale, PA 15144
Ph: 412-274-4722
Fax: 412-274-4722

PLASTIC PIPE AND FITTINGS ASSOCIATION (PPFA)

800 Roosevelt Rd., Bldg C, Suite 20
Glen Ellyn, IL 60137
Ph: 630-858-6540
Fax: 630-790-3095

PLASTICS PIPE INSTITUTE (PPI)

1801 L St. NW, Suite 600K
Washington, D. C. 20006-1301
Ph: 888-314-6774
Fax: 202-293-0048
Internet: http://www.plasticpipe.org
Order Publications from:
SPI
P. O. Box 753
Waldorf, MD 20604
Ph: 202-974-5332
Fax: 800-541-0736 or 202-296-7359

PLUMBING AND DRAINAGE INSTITUTE (PDI)

45 Bristol Dr., Suite 101.
South Easton, MA 02375
Ph: 508-230-3516
Fax: 508-230-3529
E-Mail: pdhw@tiac.net

PLUMBING AND PIPING INDUSTRY COUNCIL (PPIC)

501 Shatto Place, Suite 402
Los Angeles, CA 90020
Ph: 213-487-3790
Fax: 213-487-3880

PORCELAIN ENAMEL INSTITUTE (PEI)

4004 Hillsboro Pike, Suite 224B
Nashville, TN 37215
Ph: 615-385-5357
Fax: 615-385-5463
Internet: www.porcelainenamel.com

PRECAST/PRESTRESSED CONCRETE INSTITUTE (PCI)

175 West Jackson Blvd., Suite 1859
Chicago, IL 60604-9773
Ph: 312-786-0300
Fax: 312-786-0353
Internet: www.pci.org
e-mail: info@pci.org

RUBBER MANUFACTURERS ASSOCIATION (RMA)

1400 K St., NW
Washington, DC 20005
Ph: 202-682-4866
Fax: 202-682-4810
Order Publications from:
The Mail Room
P. O. Box 3147
Medina, OH 44258
Ph: 800-325-5098 or 330-723-2987
Fax: 330-725-0576

RURAL UTILITIES SERVICE (RUS)

ATTN: Publications
14th and Independence Ave., SW, Room 4028-S
Washington, DC 20250
Ph: 202-720-8674 OR 202-720-8679
Fax: 202-205-3654
Internet: www.usda.gov/rus/home/home.htm

SCREEN MANUFACTURERS ASSOCIATION (SMA)

2850 South Ocean Boulevard, Suite 114
Palm Beach, FL 33480-5535
Ph: 561-533-0991
Fax: 561-533-7466
e-mail: fscottfitzgerald@compuserve.com

SHEET METAL & AIR CONDITIONING CONTRACTORS' NATIONAL ASSOCIATION (SMACNA)

P.O. Box 221230
Chantilly, VA 20153-1230
Ph: 703-803-2980
Fax: 703-803-3732
Internet: http://www.smacna.org

SINGLE PLY ROOFING INSTITUTE (SPRI)

200 Reservoir St., Suite 309A
Needham, MA 02494
Ph: 781-444-0242
Fax: 781-444-6111
Internet: www.spri.org

SOCIETY OF AUTOMOTIVE ENGINEERS (SAE)

400 Commonwealth Dr.
Warrendale, PA 15096-0001
Ph: 724-776-4970
Fax: 724-776-0790
Internet: http://www.sae.org
e-mail: publications@sae.org

SOUTHERN BUILDING CODE CONGRESS INTERNATIONAL (SBCCI)

900 Montclair Road
Birmingham, AL 35213-1206
Ph: 205-591-1853
Fax: 205-591-0775

SOUTHERN CYPRESS MANUFACTURERS ASSOCIATION (SCMA)

400 Penn Center Boulevard, Suite 530
Pittsburgh, PA 15235
Ph: 412-829-0770
Fax: 412-829-0844

SOUTHERN PINE INSPECTION BUREAU (SPIB)

4709 Scenic Highway
Pensacola, FL 32504-9094
Ph: 850-434-2611
Fax: 850-433-5594
e-mail: spib@spib.org

SSPC: THE SOCIETY FOR PROTECTIVE COATINGS (SSPC)

40 24th Street, 6th Floor
Pittsburgh, PA 15222-4656
Ph: 412-281-2331
Fax: 412-281-9992
Internet: www.sspc.org
NOTE: SSPC documents, except as noted otherwise, are available only as a part of the 1995 Steel Structures Painting Manual, 7th Edition @ $115.00. \F

STEEL DECK INSTITUTE (SDI)

P.O. Box 25
Fox River Grove, IL 60021
Ph: 847-462-1930
Fax: 847-462-1940
Internet: http://www.sdi.org
e-mail: janet@sdi.org

STEEL DOOR INSTITUTE (SDOI)

30200 Detroit Rd.
Cleveland, OH 44145-1967
Ph: 216-899-0010
Fax: 216-892-1404

STEEL JOIST INSTITUTE (SJI)

3127 Tenth Ave., North Ext.
Myrtle Beach, SC 29577-6760
Ph: 803-626-1995
Fax: 803-626-5565

STEEL TANK INSTITUTE (STI)

570 Oakwood Rd.
Lake Zurich, IL 60047
Ph: 847-438-8265

Fax: 847-438-4500
Internet: www.steeltank.com
e-mail: technic@interaccess.com

STEEL WINDOW INSTITUTE (SWI)

1300 Sumner Ave.
Cleveland, OH 44115-2851
Ph: 216-241-7333
Fax: 216-241-0105

TILE COUNCIL OF AMERICA (TCA)

P.O. Box 1787
Clemson, SC 29633-1787
Ph: 864-646-8453
FAX: 864-646-2821

TRUSS PLATE INSTITUTE (TPI)

583 D'Onofrio Dr., Suite 200
Madison, WI 53719
Ph: 608-833-5900
Fax: 608-833-4360

TUBULAR EXCHANGE MANUFACTURERS ASSOCIATION (TEMA)

25 N. Broadway
Tarrytown, NY 10591
Ph: 914-332-0040
Fax: 914-332-1541

UNDERWRITERS LABORATORIES (UL)

333 Pfingsten Rd.
Northbrook, IL 60062-2096
Ph: 800-704-4050
Fax: 847-509-6249
Internet: http://www.ul.com/
Order from:
Global Engineering Documents
15 Inverness Way East
Englewood, CO 80112-5776
Ph: 800-569-7128
Fax: 303-397-7945
Internet: http://global.ihs.com
E-mail: global@ihs.com
Note: First price is for std only. Second price is for Std, incl Revision Subscription Service.

UNI-BELL PVC PIPE ASSOCIATION (UBPPA)

2655 Villa Creek Dr., Suite 155
Dallas, TX 75234
Ph: 214-243-3902
Fax: 214-243-3907

U. S. ARMY ENVIORNMENTAL HYGIENE AGENCY (USAEHA)

Waste Disposal Engineering Division
Aberdeen Proving Ground, MD 21010-5422
Ph: 410-671-3652

WATER ENVIRONMENT FEDERATION (WEF)

601 Wythe St.
Alexandria, VA 22314-1994
Ph: 703-684-2400
Fax: 703-684-2492
Internet: www.wef.org

WATER QUALITY ASSOCIATION (WQA)

4151 Naperville Rd.
Lisle, IL 60532
Ph: 630-505-0160
Fax: 630-505-9637

WEST COAST LUMBER INSPECTION BUREAU (WCLIB)

P.O. Box 23145
Portland, OR 97281
Ph: 503-639-0651
Fax: 503-684-8928

WESTERN WOOD PRESERVERS INSTITUTE (WWPI)

7017 N.E. Highway 99 # 108
Vancover, WA 98666
Ph: 360-693-9958
Fax: 360-693-9967

WESTERN WOOD PRODUCTS ASSOCIATION (WWPA)

Yeon Bldg.
522 SW 5th Ave.
Portland, OR 97204-2122
Ph: 503-224-3930
Fax: 503-224-3934

WOOD MOULDING AND MILLWORK PRODUCERS ASSOCIATION (WMMPA)

507 First Street
Woodland, CA 95695
Ph: 916-661-9591
Fax: 916-661-9586

-- End of Section --

SECTION TABLE OF CONTENTS

DIVISION 01 - GENERAL REQUIREMENTS

SECTION 01200

WARRANTY OF CONSTRUCTION

5/00; Rev 01/02

PART 1 GENERAL

1.1 WARRANTY OF CONSTRUCTION
1.2 ADDITIONAL WARRANTY REQUIREMENTS
1.2.1 Performance Bond
1.2.2 Pre-Warranty Conference
1.2.3 Equipment Warranty Identification
1.2.4 Warranty Service Calls
1.2.5 Equipment Warranty Booklet
1.3 SUBMITTALS
1.4 EQUIPMENT WARRANTY IDENTIFICATIONS TAGS
1.4.1 GENERAL REQUIREMENTS
1.4.1.1 Tags and Information
1.4.1.2 Tags for Warranted Equipment
1.4.1.3 Exclusion to Providing Tags
1.4.2 EXECUTION
1.4.3 Equipment Warranty Tag Replacement

PART 2 NOT USED

PART 3 NOT USED

-- End of Section Table of Contents --

SECTION 01200

WARRANTY OF CONSTRUCTION
5/00; Rev 01/02

PART 1 GENERAL

1.1 WARRANTY OF CONSTRUCTION

(a) Foremost and in addition to any other warranties in this contract, the Contractor warrants, except as provided in paragraph (i) of this clause, that work performed under this contract conforms to the contract requirements and is free of any defect in equipment, material, design furnished, or workmanship performed by the Contractor or any subcontractor or supplier at any tier.

(b) This warranty shall continue for a period of 1 year from the date of final acceptance of the work. If the Government takes possession of any part of the work before final acceptance, this warranty shall continue for a period of 1 year from the date the Government takes possession.

(c) The Contractor shall remedy at the Contractor's expense any failure to conform, or any defect. In addition, the Contractor shall remedy at the Contractor's expense any damage to Government-owned or controlled real or personal property, when that damage is the result of--

(1) The Contractor's failure to conform to contract requirements; or

(2) Any defect of equipment, material, workmanship, or design furnished by the Contractor.

(d) The Contractor shall restore any work damaged in fulfilling the terms and conditions of this clause.

(e) The Contractor's warranty with respect to work restored, repaired or replaced will run for 1 year from the date of restoration, repair or replacement. This provision applies equally to all items restored, repaired, or replaced under paragraph (c) and (d) above.

(f) The Government will notify the Contractor, in writing, within a reasonable time after the discovery of any failure, defect, or damage. Repair work necessary to correct a warranty condition which arises to threaten the health or safety of personnel, the physical safety of property or equipment, or which impairs operations, habitability of living spaces, etc., will be performed by the Contractor on an immediate basis as directed verbally by the Government. Written verification will follow verbal instruction.

(g) If the Contractor fails to remedy any failure, defect, or damage within a reasonable time after receipt of verbal or written notice, the Government shall have the right to replace, repair, or otherwise remedy the failure, defect, or damage at the Contractor's expense.

(h) With respect to all warranties, express or implied, from subcontractors, manufacturers, or suppliers for work performed and materials furnished under this contract, the Contractor shall--

(1) Obtain all warranties that would be given in normal commercial practice;

(2) Require all warranties to be executed, in writing, for the benefit of the Government, if directed by the Contracting Officer; and

(3) Enforce all warranties for the benefit of the Government, if directed by the Contracting Officer.

(i) In the event the Contractor's warranty under paragraph (b) of this clause has expired, the Government may bring suit at its expense to enforce a subcontractor's, manufacturer's, or supplier's warranty.

(j) Unless a defect is caused by the negligence of the Contractor or subcontractor or supplier at any tier, the Contractor shall not be liable for the repair of any defects of material or design furnished by the Government nor for the repair of any damage that results from any defect in Government-furnished material or design.

(k) This warranty shall not limit the Government's rights under the Inspection and Acceptance clause of this contract with respect to latent defects, gross mistakes, or fraud.

1.2 ADDITIONAL WARRANTY REQUIREMENTS

1.2.1 Performance Bond

(a) It is understood that the Contractor's Performance Bond will remain effective for one (1) year from the date of acceptance.

(b) If either the Contractor or his representative doesn't diligently pursue warranty work to completion, the contractor and surety will be liable for all costs. The Government, at its option, will either have the work performed by others or require the surety to have it done. Both direct and administrative costs will be reimbursable to the Government.

1.2.2 Pre-Warranty Conference

(a) Prior to contract completion and at a time designated by the Contracting Officer or his authorized representative, the Contractor shall meet with the Contracting Officer or his authorized representative to develop a mutual understanding with respect to the requirements of the Paragraph: WARRANTY OF CONSTRUCTION. Communication procedures for Contractor notification of warranty defects, priorities with respect to the type of defect and other details deemed necessary by the Contracting Officer or his authorized representative for the execution of the construction warranty shall be established/reviewed at this meeting.

(b) In connection with these requirements and at the time of the Contractor's quality control completion inspection, the Contractor will furnish the name, telephone number and address of the service

representative which is authorized to initiate and pursue warranty work action on behalf of the Contractor and surety. This single point of contact will be located within the local service area of the warranted construction, will be continuously available, and will be responsive to Government inquiry on warranty work action and status. This requirement does not relieve the Contractor of any Contractual responsibilities in connection with the paragraph: WARRANTY OF CONSTRUCTION.

(c) Local service area is defined as the area in which the contractor or his representative can meet the response times as described in paragraph 1.2.4 and in any event shall not exceed 200 miles radius of the construction site.

1.2.3 Equipment Warranty Identification

The Contractor shall provide warranty identification tags on all mechanical and electrical equipment installed under this contract. Tags and installation shall be in accordance with the requirements of Paragraph: EQUIPMENT WARRANTY IDENTIFICATION TAGS.

1.2.4 Warranty Service Calls

The Contractor or his local service representative will respond to the site, to a call within the time periods as follows: Four (4) hours for Heating, Air Conditioning, Refrigeration, Air Supply and Distribution, Critical Electrical service Systems and Food Service Equipment and Twenty-Four (24) hours For All Other Systems.

1.2.5 Equipment Warranty Booklet

At or before 30 days prior to final inspection and acceptance of the work, the Contractor shall submit the data mentioned as follows:

The Contractor shall provided a Booklet, which consists of a listing of all equipment items (see paragraphs a. and b. below) which are specified to be guaranteed along with the warranty papers for each piece of equipment. Three (3) legible bound copies of the booklet shall be submitted for approval and shall be indexed alphabetically by equipment type. For each specific guaranteed item, the name, address, and telephone number shall be shown on the list for the subcontractor who installed equipment, equipment supplier or distributor, and equipment manufacturer. Completion date of the guarantee period shall correspond to the applicable specification requirements for each guaranteed item. The names of service representatives that will make warranty calls along with the day, night, weekend and holiday contacts for response to a call within the time period specified shall also be identified.

a. For Equipment in Place: The equipment list shall show unit retail value and nameplate data including model number, size, manufacturer, etc. This would include capital equipment and other nonexpendable supplies of a movable nature that are not affixed as an integral part of the facility and may be removed without destroying or reducing the usefulness of the facility. Some examples are spare parts, special tools, manufacturing equipment, maintenance equipment, instruments, installed under this contract.

b. For Installed Building Equipment: The equipment list shall show unit retail value and nameplate data including model number, size, manufacturer,

etc. This would include items of equipment and furnishings (including material for installation thereof), which are required to make the facility usable and are affixed as a permanent part of the structure. Some examples are plumbing fixtures, laboratory counters and cabinets, kitchen equipment, mechanical equipment, electrical equipment, and fire protection systems installed under this contract.

1.3 SUBMITTALS

Government approval is required for submittals with a "G" designation; submittals not having a "G" designation are for information only. When used, a designation following the "G" designation identifies the office that will review the submittal for the Government. The following shall be submitted in accordance with Section 01330SUBMITTAL PROCEDURES:

SD-11 Closeout Submittals

Equipment Warranty Booklet

1.4 EQUIPMENT WARRANTY IDENTIFICATIONS TAGS

1.4.1 GENERAL REQUIREMENTS

The Contractor shall provide warranty identification tags on all Contractor and government furnished equipment which is Contractor installed.

1.4.1.1 Tags and Information

The tags and information shall be similar in format and size to the exhibits provided by this specification, and shall be suitable for interior and exterior locations, resistant to solvents, abrasion, and to fading caused by sunlight, precipitation, etc. These tags shall have a permanent pressure- sensitive adhesive back, and shall be installed in a position that is easily (or most easily) noticeable. If the equipment surface is not suitable for adhesive back, Contractor shall submit his alternative to the Contracting Officer's Authorized Representative for review and approval. Contractor furnished equipment that has differing warranties on its components will have each component tagged.

1.4.1.2 Tags for Warranted Equipment

The tag for his equipment shall be similar to the following:

```
+-------------------------------------------+
¦            EQUIPMENT WARRANTY             ¦
¦                                           ¦
¦      CONTRACTOR FURNISHED EQUIPMENT       ¦
¦                                           ¦
¦                                           ¦
¦ MFG----------------MODEL NO.-----------   ¦
¦                                           ¦
¦ SERIAL NO.------------------------------  ¦
¦                                           ¦
¦ CONTRACT NO.----------------------------  ¦
¦                                           ¦
¦ CONTRACTOR NAME-------------------------  ¦
¦                                           ¦
¦ CONTRACTOR ADDRESS----------------------  ¦
¦                                           ¦
```

```
¦ CONTRACTOR TELEPHONE-------------------- ¦
¦                                          ¦
¦ CONTRACTOR WARRANTY EXPIRES------------- ¦
¦                                          ¦
¦ IN CASE OF WARRANTY ACTION FIRST CONTACT ¦
¦                                          ¦
¦     [DEH] [BCE] AT [TELEPHONE NUMBER]    ¦
¦                                          ¦
+------------------------------------------+
```

```
+--------------------------------------------------+
¦                                                  ¦
¦                EQUIPMENT WARRANTY                ¦
¦                                                  ¦
¦          GOVERNMENT FURNISHED EQUIPMENT          ¦
¦                                                  ¦
¦  MFG _________________  MODEL NO._______________ ¦
¦                                                  ¦
¦  SERIAL NO. ___________________________________ ¦
¦                                                  ¦
¦  CONTRACT NO. __________________________________ ¦
¦                                                  ¦
¦  DATE EQUIP PLACED IN SERVICE _________________ ¦
¦                                                  ¦
+--------------------------------------------------+
```

1.4.1.3 Exclusion to Providing Tags

If the manufacturer's name (MFG), model number and serial number are on the manufacturer's equipment data plate and this data plate is easily found and fully legible, this information need not be duplicated on the equipment warranty tag. The Contractor's warranty expiration date and the final manufacturer's warranty expiration date will be determined as specified by the Paragraph "WARRANTY OF CONSTRUCTION".

1.4.2 EXECUTION

The Contractor will complete the required information on each tag and install these tags on the equipment by the time of and as a condition of final acceptance of the equipment. The Contractor shall be responsible for scheduling acceptance inspection with the Contracting Officer (verbal and written notification required). If this inspection is delayed by the Contractor, the Contractor shall, at his own expense, update the in-service and warranty expiration dates on these tags.

1.4.3 Equipment Warranty Tag Replacement

Under the terms of this contract, the Contractor's warranty with respect to work repaired or replaced shall run for one year from the date of repair or replacement. Such activity shall include a data warranty identification tag on the repaired or replaced equipment. The tag shall be furnished and installed by the Contractor, and shall be similar to the original tag, except that it should include the scope of repair and that the contractor's warranty expiration date will be one year from the date of acceptance of the repair or replacement. In the case of repair, the repair only will be covered by the extended warranty. In the case of replacement of a component, the component only will be covered by the extended warranty. In these cases, the original tags will not be removed, but an additional tag

will be installed for the repair or component replacement.

PART 2 NOT USED

PART 3 NOT USED

-- End of Section --

SECTION TABLE OF CONTENTS

DIVISION 01 - GENERAL REQUIREMENTS

SECTION 01320A

PROJECT SCHEDULE

08/01

PART 1 GENERAL

1.1 REFERENCES
1.2 QUALIFICATIONS

PART 2 PRODUCTS (Not Applicable)

PART 3 EXECUTION

3.1 GENERAL REQUIREMENTS
3.2 BASIS FOR PAYMENT
3.3 PROJECT SCHEDULE
3.3.1 Use of the Critical Path Method
3.3.2 Level of Detail Required
3.3.2.1 Activity Durations
3.3.2.2 Procurement Activities
3.3.2.3 Critical Activities
3.3.2.4 Government Activities
3.3.2.5 Responsibility
3.3.2.6 Work Areas
3.3.2.7 Modification or Claim Number
3.3.2.8 Bid Item
3.3.2.9 Phase of Work
3.3.2.10 Category of Work
3.3.2.11 Feature of Work
3.3.3 Scheduled Project Completion
3.3.3.1 Project Start Date
3.3.3.2 Constraint of Last Activity
3.3.3.3 Early Project Completion
3.3.4 Interim Completion Dates
3.3.4.1 Start Phase
3.3.4.2 End Phase
3.3.4.3 Phase X
3.3.5 Default Progress Data Disallowed
3.3.6 Out-of-Sequence Progress
3.3.7 Negative Lags
3.4 PROJECT SCHEDULE SUBMISSIONS
3.4.1 Preliminary Project Schedule Submission
3.4.2 Initial Project Schedule Submission
3.4.3 Periodic Schedule Updates
3.4.4 Standard Activity Coding Dictionary
3.5 SUBMISSION REQUIREMENTS
3.5.1 Data Disks
3.5.1.1 File Medium
3.5.1.2 Disk Label

3.5.1.3 File Name
3.5.2 Narrative Report
3.5.3 Approved Changes Verification
3.5.4 Schedule Reports
3.5.4.1 Activity Report
3.5.4.2 Logic Report
3.5.4.3 Total Float Report
3.5.4.4 Earnings Report
3.5.5 Network Diagram
3.5.5.1 Continuous Flow
3.5.5.2 Project Milestone Dates
3.5.5.3 Critical Path
3.5.5.4 Banding
3.5.5.5 S-Curves
3.6 PERIODIC PROGRESS MEETINGS
3.6.1 Meeting Attendance
3.6.2 Update Submission Following Progress Meeting
3.6.3 Progress Meeting Contents
3.6.3.1 Start and Finish Dates
3.6.3.2 Time Completion
3.6.3.3 Cost Completion
3.6.3.4 Logic Changes
3.6.3.5 Other Changes
3.7 REQUESTS FOR TIME EXTENSIONS
3.7.1 Justification of Delay
3.7.2 Submission Requirements
3.7.3 Additional Submission Requirements
3.8 DIRECTED CHANGES
3.9 OWNERSHIP OF FLOAT

-- End of Section Table of Contents --

SECTION 01320A

PROJECT SCHEDULE
08/01

PART 1 GENERAL

1.1 REFERENCES

The publications listed below form a part of the specification to the extent referenced. The publications are referenced in the text by basic designation only.

U.S. ARMY CORPS OF ENGINEERS (USACE)

ER 1-1-11	(1995) Progress, Schedules, and Network Analysis Systems

1.2 QUALIFICATIONS

The Contractor shall designate an authorized representative who shall be responsible for the preparation of all required project schedule reports.

PART 2 PRODUCTS (Not Applicable)

PART 3 EXECUTION

3.1 GENERAL REQUIREMENTS

Pursuant to the Contract Clause, SCHEDULE FOR CONSTRUCTION CONTRACTS, a Project Schedule as described below shall be prepared. The scheduling of construction shall be the responsibility of the Contractor. Contractor management personnel shall actively participate in its development. Subcontractors and suppliers working on the project shall also contribute in developing and maintaining an accurate Project Schedule. The approved Project Schedule shall be used to measure the progress of the work, to aid in evaluating time extensions, and to provide the basis of all progress payments.

3.2 BASIS FOR PAYMENT

The schedule shall be the basis for measuring Contractor progress. Lack of an approved schedule or scheduling personnel will result in an inability of the Contracting Officer to evaluate Contractor's progress for the purposes of payment. Failure of the Contractor to provide all information, as specified below, shall result in the disapproval of the entire Project Schedule submission and the inability of the Contracting Officer to evaluate Contractor progress for payment purposes. In the case where Project Schedule revisions have been directed by the Contracting Officer and those revisions have not been included in the Project Schedule, the Contracting Officer may hold retainage up to the maximum allowed by contract, each payment period, until revisions to the Project Schedule have been made.

3.3 PROJECT SCHEDULE

The computer software system utilized by the Contractor to produce the Project Schedule shall be capable of providing all requirements of this specification. Failure of the Contractor to meet the requirements of this specification shall result in the disapproval of the schedule. Manual methods used to produce any required information shall require approval by the Contracting Officer.

3.3.1 Use of the Critical Path Method

The Critical Path Method (CPM) of network calculation shall be used to generate the Project Schedule. The Contractor shall provide the Project Schedule in the Precedence Diagram Method (PDM).

3.3.2 Level of Detail Required

The Project Schedule shall include an appropriate level of detail. Failure to develop or update the Project Schedule or provide data to the Contracting Officer at the appropriate level of detail, as specified by the Contracting Officer, shall result in the disapproval of the schedule. The Contracting Officer will use, but is not limited to, the following conditions to determine the appropriate level of detail to be used in the Project Schedule:

3.3.2.1 Activity Durations

Contractor submissions shall follow the direction of the Contracting Officer regarding reasonable activity durations. Reasonable durations are those that allow the progress of activities to be accurately determined between payment periods (usually less than 2 percent of all non-procurement activities' Original Durations are greater than 20 days).

3.3.2.2 Procurement Activities

Tasks related to the procurement of long lead materials or equipment shall be included as separate activities in the project schedule. Long lead materials and equipment are those materials that have a procurement cycle of over 90 days. Examples of procurement process activities include, but are not limited to: submittals, approvals, procurement, fabrication, and delivery.

3.3.2.3 Critical Activities

The following activities shall be listed as separate line activities on the Contractor's project schedule:

a. Submission and approval of mechanical/electrical layout drawings.

b. Submission and approval of O & M manuals.

c. Submission and approval of as-built drawings.

d. Submission and approval of 1354 data and installed equipment lists.

e. Submission and approval of testing and air balance (TAB).

f. Submission of TAB specialist design review report.

g. Submission and approval of fire protection specialist.

h. Submission and approval of testing and balancing of HVAC plus commissioning plans and data.

i. Air and water balance dates.

j. HVAC commissioning dates.

k. Controls testing plan.

l. Controls testing.

m. Performance Verification testing.

n. Other systems testing, if required.

o. Prefinal inspection.

p. Correction of punchlist from prefinal inspection.

q. Final inspection.

3.3.2.4 Government Activities

Government and other agency activities that could impact progress shall be shown. These activities include, but are not limited to: approvals, inspections, utility tie-in, Government Furnished Equipment (GFE) and Notice to Proceed (NTP) for phasing requirements.

3.3.2.5 Responsibility

All activities shall be identified in the project schedule by the party responsible to perform the work. Responsibility includes, but is not limited to, the subcontracting firm, contractor work force, or government agency performing a given task. Activities shall not belong to more than one responsible party. The responsible party for each activity shall be identified by the Responsibility Code.

3.3.2.6 Work Areas

All activities shall be identified in the project schedule by the work area in which the activity occurs. Activities shall not be allowed to cover more than one work area. The work area of each activity shall be identified by the Work Area Code.

3.3.2.7 Modification or Claim Number

Any activity that is added or changed by contract modification or used to justify claimed time shall be identified by a mod or claim code that changed the activity. Activities shall not belong to more than one modification or claim item. The modification or claim number of each activity shall be identified by the Mod or Claim Number. Whenever possible, changes shall be added to the schedule by adding new activities. Existing activities shall not normally be changed to reflect modifications.

3.3.2.8 Bid Item

All activities shall be identified in the project schedule by the Bid Item to which the activity belongs. An activity shall not contain work in more than one bid item. The bid item for each appropriate activity shall be

identified by the Bid Item Code.

3.3.2.9 Phase of Work

All activities shall be identified in the project schedule by the phases of work in which the activity occurs. Activities shall not contain work in more than one phase of work. The project phase of each activity shall be by the unique Phase of Work Code.

3.3.2.10 Category of Work

All Activities shall be identified in the project schedule according to the category of work which best describes the activity. Category of work refers, but is not limited, to the procurement chain of activities including such items as submittals, approvals, procurement, fabrication, delivery, installation, start-up, and testing. The category of work for each activity shall be identified by the Category of Work Code.

3.3.2.11 Feature of Work

All activities shall be identified in the project schedule according to the feature of work to which the activity belongs. Feature of work refers, but is not limited to, a work breakdown structure for the project. The feature of work for each activity shall be identified by the Feature of Work Code.

3.3.3 Scheduled Project Completion

The schedule interval shall extend from NTP to the contract completion date.

3.3.3.1 Project Start Date

The schedule shall start no earlier than the date on which the NTP was acknowledged. The Contractor shall include as the first activity in the project schedule an activity called "Start Project". The "Start Project" activity shall have an "ES" constraint date equal to the date that the NTP was acknowledged, and a zero day duration.

3.3.3.2 Constraint of Last Activity

Completion of the last activity in the schedule shall be constrained by the contract completion date. Calculation on project updates shall be such that if the early finish of the last activity falls after the contract completion date, then the float calculation shall reflect a negative float on the critical path. The Contractor shall include as the last activity in the project schedule an activity called "End Project". The "End Project" activity shall have an "LF" constraint date equal to the completion date for the project, and a zero day duration.

3.3.3.3 Early Project Completion

In the event the project schedule shows completion of the project prior to the contract completion date, the Contractor shall identify those activities that have been accelerated and/or those activities that are scheduled in parallel to support the Contractor's "early" completion. Contractor shall specifically address each of the activities noted in the narrative report at every project schedule update period to assist the Contracting Officer in evaluating the Contractor's ability to actually complete prior to the contract period.

3.3.4 Interim Completion Dates

Contractually specified interim completion dates shall also be constrained to show negative float if the early finish date of the last activity in that phase falls after the interim completion date.

3.3.4.1 Start Phase

The Contractor shall include as the first activity for a project phase an activity called "Start Phase X" where "X" refers to the phase of work. The "Start Phase X" activity shall have an "ES" constraint date equal to the date on which the NTP was acknowledged, and a zero day duration.

3.3.4.2 End Phase

The Contractor shall include as the last activity in a project phase an activity called "End Phase X" where "X" refers to the phase of work. The "End Phase X" activity shall have an "LF" constraint date equal to the completion date for the project, and a zero day duration.

3.3.4.3 Phase X

The Contractor shall include a hammock type activity for each project phase called "Phase X" where "X" refers to the phase of work. The "Phase X" activity shall be logically tied to the earliest and latest activities in the phase.

3.3.5 Default Progress Data Disallowed

Actual Start and Finish dates shall not be automatically updated by default mechanisms that may be included in CPM scheduling software systems. Actual Start and Finish dates on the CPM schedule shall match those dates provided from Contractor Quality Control Reports. Failure of the Contractor to document the Actual Start and Finish dates on the Daily Quality Control report for every in-progress or completed activity, and failure to ensure that the data contained on the Daily Quality Control reports is the sole basis for schedule updating shall result in the disapproval of the Contractor's schedule and the inability of the Contracting Officer to evaluate Contractor progress for payment purposes. Updating of the percent complete and the remaining duration of any activity shall be independent functions. Program features which calculate one of these parameters from the other shall be disabled.

3.3.6 Out-of-Sequence Progress

Activities that have posted progress without all preceding logic being satisfied (Out-of-Sequence Progress) will be allowed only on a case-by-case approval of the Contracting Officer. The Contractor shall propose logic corrections to eliminate all out of sequence progress or justify not changing the sequencing for approval prior to submitting an updated project schedule.

3.3.7 Negative Lags

Lag durations contained in the project schedule shall not have a negative value.

3.4 PROJECT SCHEDULE SUBMISSIONS

The Contractor shall provide the submissions as described below. The data disk, reports, and network diagrams required for each submission are contained in paragraph SUBMISSION REQUIREMENTS.

3.4.1 Preliminary Project Schedule Submission

The Preliminary Project Schedule, defining the Contractor's planned operations for the first 60 calendar days shall be submitted for approval within 20 calendar days after the NTP is acknowledged. The approved preliminary schedule shall be used for payment purposes not to exceed 60 calendar days after NTP.

3.4.2 Initial Project Schedule Submission

The Initial Project Schedule shall be submitted for approval within 40 calendar days after NTP. The schedule shall provide a reasonable sequence of activities which represent work through the entire project and shall be at a reasonable level of detail.

3.4.3 Periodic Schedule Updates

Based on the result of progress meetings, specified in "Periodic Progress Meetings," the Contractor shall submit periodic schedule updates. These submissions shall enable the Contracting Officer to assess Contractor's progress. If the Contractor fails or refuses to furnish the information and project schedule data, which in the judgement of the Contracting Officer or authorized representative is necessary for verifying the Contractor's progress, the Contractor shall be deemed not to have provided an estimate upon which progress payment may be made.

3.4.4 Standard Activity Coding Dictionary

The Contractor shall use the activity coding structure defined in the Standard Data Exchange Format (SDEF) in ER 1-1-11, Appendix A. This exact structure is mandatory, even if some fields are not used.

3.5 SUBMISSION REQUIREMENTS

The following items shall be submitted by the Contractor for the preliminary submission, initial submission, and every periodic project schedule update throughout the life of the project:

3.5.1 Data Disks

Two data disks containing the project schedule shall be provided. Data on the disks shall adhere to the SDEF format specified in ER 1-1-11, Appendix A.

3.5.1.1 File Medium

Required data shall be submitted on 3.5 disks, formatted to hold 1.44 MB of data, under the MS-DOS Version 5. or 6.x, unless otherwise approved by the Contracting Officer.

3.5.1.2 Disk Label

A permanent exterior label shall be affixed to each disk submitted. The label shall indicate the type of schedule (Preliminary, Initial, Update, or Change), full contract number, project name, project location, data date,

name and telephone number or person responsible for the schedule, and the MS-DOS version used to format the disk.

3.5.1.3 File Name

Each file submitted shall have a name related to either the schedule data date, project name, or contract number. The Contractor shall develop a naming convention that will ensure that the names of the files submitted are unique. The Contractor shall submit the file naming convention to the Contracting Officer for approval.

3.5.2 Narrative Report

A Narrative Report shall be provided with the preliminary, initial, and each update of the project schedule. This report shall be provided as the basis of the Contractor's progress payment request. The Narrative Report shall include: a description of activities along the 2 most critical paths, a description of current and anticipated problem areas or delaying factors and their impact, and an explanation of corrective actions taken or required to be taken. The narrative report is expected to relay to the Government, the Contractor's thorough analysis of the schedule output and its plans to compensate for any problems, either current or potential, which are revealed through that analysis.

3.5.3 Approved Changes Verification

Only project schedule changes that have been previously approved by the Contracting Officer shall be included in the schedule submission. The Narrative Report shall specifically reference, on an activity by activity basis, all changes made since the previous period and relate each change to documented, approved schedule changes.

3.5.4 Schedule Reports

The format for each activity for the schedule reports listed below shall contain: Activity Numbers, Activity Description, Original Duration, Remaining Duration, Early Start Date, Early Finish Date, Late Start Date, Late Finish Date, Total Float. Actual Start and Actual Finish Dates shall be printed for those activities in progress or completed.

3.5.4.1 Activity Report

A list of all activities sorted according to activity number.

3.5.4.2 Logic Report

A list of Preceding and Succeeding activities for every activity in ascending order by activity number. Preceeding and succeeding activities shall include all information listed above in paragraph Schedule Reports. A blank line shall be left between each activity grouping.

3.5.4.3 Total Float Report

A list of all incomplete activities sorted in ascending order of total float. Activities which have the same amount of total float shall be listed in ascending order of Early Start Dates. Completed activities shall not be shown on this report.

3.5.4.4 Earnings Report

A compilation of the Contractor's Total Earnings on the project from the NTP until the most recent Monthly Progress Meeting. This report shall reflect the Earnings of specific activities based on the agreements made in the field and approved between the Contractor and Contracting Officer at the most recent Monthly Progress Meeting. Provided that the Contractor has provided a complete schedule update, this report shall serve as the basis of determining Contractor Payment. Activities shall be grouped by bid item and sorted by activity numbers. This report shall: sum all activities in a bid item and provide a bid item percent; and complete and sum all bid items to provide a total project percent complete. The printed report shall contain, for each activity: the Activity Number, Activity Description, Original Budgeted Amount, Total Quantity, Quantity to Date, Percent Complete (based on cost), and Earnings to Date.

3.5.5 Network Diagram

The network diagram shall be required on the initial schedule submission and on monthly schedule update submissions. The network diagram shall depict and display the order and interdependence of activities and the sequence in which the work is to be accomplished. The Contracting Officer will use, but is not limited to, the following conditions to review compliance with this paragraph:

3.5.5.1 Continuous Flow

Diagrams shall show a continuous flow from left to right with no arrows from right to left. The activity number, description, duration, and estimated earned value shall be shown on the diagram.

3.5.5.2 Project Milestone Dates

Dates shall be shown on the diagram for start of project, any contract required interim completion dates, and contract completion dates.

3.5.5.3 Critical Path

The critical path shall be clearly shown.

3.5.5.4 Banding

Activities shall be grouped to assist in the understanding of the activity sequence. Typically, this flow will group activities by category of work, work area and/or responsibility.

3.5.5.5 S-Curves

Earnings curves showing projected early and late earnings and earnings to date.

3.6 PERIODIC PROGRESS MEETINGS

Progress meetings to discuss payment shall include a monthly onsite meeting or other regular intervals mutually agreed to at the preconstruction conference. During this meeting the Contractor shall describe, on an activity by activity basis, all proposed revisions and adjustments to the project schedule required to reflect the current status of the project. The Contracting Officer will approve activity progress, proposed revisions, and adjustments as appropriate.

3.6.1 Meeting Attendance

The Contractor's Project Manager and Scheduler shall attend the regular progress meeting.

3.6.2 Update Submission Following Progress Meeting

A complete update of the project schedule containing all approved progress, revisions, and adjustments, based on the regular progress meeting, shall be submitted not later than 4 working days after the monthly progress meeting.

3.6.3 Progress Meeting Contents

Update information, including Actual Start Dates, Actual Finish Dates, Remaining Durations, and Cost-to-Date shall be subject to the approval of the Contracting Officer. As a minimum, the Contractor shall address the following items on an activity by activity basis during each progress meeting.

3.6.3.1 Start and Finish Dates

The Actual Start and Actual Finish dates for each activity currently in-progress or completed .

3.6.3.2 Time Completion

The estimated Remaining Duration for each activity in-progress. Time-based progress calculations shall be based on Remaining Duration for each activity.

3.6.3.3 Cost Completion

The earnings for each activity started. Payment will be based on earnings for each in-progress or completed activity. Payment for individual activities will not be made for work that contains quality defects. A portion of the overall project amount may be retained based on delays of activities.

3.6.3.4 Logic Changes

All logic changes pertaining to NTP on change orders, change orders to be incorporated into the schedule, contractor proposed changes in work sequence, corrections to schedule logic for out-of-sequence progress, lag durations, and other changes that have been made pursuant to contract provisions shall be specifically identified and discussed.

3.6.3.5 Other Changes

Other changes required due to delays in completion of any activity or group of activities include: 1) delays beyond the Contractor's control, such as strikes and unusual weather. 2) delays encountered due to submittals, Government Activities, deliveries or work stoppages which make re-planning the work necessary. 3) Changes required to correct a schedule which does not represent the actual or planned prosecution and progress of the work.

3.7 REQUESTS FOR TIME EXTENSIONS

In the event the Contractor requests an extension of the contract

completion date, or any interim milestone date, the Contractor shall furnish the following for a determination as to whether or not the Contractor is entitled to an extension of time under the provisions of the contract: justification, project schedule data, and supporting evidence as the Contracting Officer may deem necessary. Submission of proof of delay, based on revised activity logic, duration, and costs (updated to the specific date that the delay occurred) is obligatory to any approvals.

3.7.1 Justification of Delay

The project schedule shall clearly display that the Contractor has used, in full, all the float time available for the work involved with this request. The Contracting Officer's determination as to the number of allowable days of contract extension shall be based upon the project schedule updates in effect for the time period in question, and other factual information. Actual delays that are found to be caused by the Contractor's own actions, which result in the extension of the schedule, will not be a cause for a time extension to the contract completion date.

3.7.2 Submission Requirements

The Contractor shall submit a justification for each request for a change in the contract completion date of under 2 weeks based upon the most recent schedule update at the time of the NTP or constructive direction issued for the change. Such a request shall be in accordance with the requirements of other appropriate Contract Clauses and shall include, as a minimum:

a. A list of affected activities, with their associated project schedule activity number.

b. A brief explanation of the causes of the change.

c. An analysis of the overall impact of the changes proposed.

d. A sub-network of the affected area.

Activities impacted in each justification for change shall be identified by a unique activity code contained in the required data file.

3.7.3 Additional Submission Requirements

For any requested time extension of over 2 weeks, the Contracting Officer may request an interim update with revised activities for a specific change request. The Contractor shall provide this disk within 4 days of the Contracting Officer's request.

3.8 DIRECTED CHANGES

If the NTP is issued for changes prior to settlement of price and/or time, the Contractor shall submit proposed schedule revisions to the Contracting Officer within 2 weeks of the NTP being issued. The proposed revisions to the schedule will be approved by the Contracting Officer prior to inclusion of those changes within the project schedule. If the Contractor fails to submit the proposed revisions, the Contracting Officer may furnish the Contractor with suggested revisions to the project schedule. The Contractor shall include these revisions in the project schedule until revisions are submitted, and final changes and impacts have been negotiated. If the Contractor has any objections to the revisions furnished by the Contracting Officer, the Contractor shall advise the

Contracting Officer within 2 weeks of receipt of the revisions. Regardless of the objections, the Contractor shall continue to update the schedule with the Contracting Officer's revisions until a mutual agreement in the revisions is reached. If the Contractor fails to submit alternative revisions within 2 weeks of receipt of the Contracting Officer's proposed revisions, the Contractor will be deemed to have concurred with the Contracting Officer's proposed revisions. The proposed revisions will then be the basis for an equitable adjustment for performance of the work.

3.9 OWNERSHIP OF FLOAT

Float available in the schedule, at any time, shall not be considered for the exclusive use of either the Government or the Contractor.

-- End of Section --

SECTION TABLE OF CONTENTS

DIVISION 01 - GENERAL REQUIREMENTS

SECTION 01330

SUBMITTAL PROCEDURES

09/01; Omaha Update 10/01

PART 1 GENERAL

1.1 CONTRACTOR RESPONSIBILITIES
1.2 SUBMITTAL IDENTIFICATION (SD)
1.3 SUBMITTAL CLASSIFICATION
1.3.1 Government Approved
1.3.2 Information Only (FIO)
1.4 APPROVED SUBMITTALS
1.5 DISAPPROVED SUBMITTALS
1.6 WITHHOLDING OF PAYMENT
1.7 GENERAL
1.8 SUBMITTAL REGISTER AND ENG FORM 4288 (RMS) SUBMITTAL REGISTER
1.9 SCHEDULING
1.10 TRANSMITTAL FORM (ENG FORM 4025)
1.11 SUBMITTAL PROCEDURES
1.11.1 Procedures
1.11.1.1 "G-ED or G-AE" Submittals
1.11.1.2 "G-RE" and FIO Submittals
1.11.1.3 Certificates of Compliance
1.11.1.4 Purchase Orders
1.11.1.5 Operation and Maintenance Instructions and/or Manuals
1.11.1.6 Interior/Exterior Finish Sample and Data
1.11.2 Deviations
1.12 CONTROL OF SUBMITTALS
1.13 GOVERNMENT APPROVED SUBMITTALS
1.13.1 "G-AE" or "G-ED" Submittals
1.13.2 "G-RE" Submittals
1.14 INFORMATION ONLY SUBMITTALS
1.15 STAMPS

-- End of Section Table of Contents --

SECTION 01330

SUBMITTAL PROCEDURES
09/01; Omaha Update 10/01

PART 1 GENERAL

Attachments: Submittal Register
ENG Form 4025, Transmittal Form

1.1 CONTRACTOR RESPONSIBILITIES

The Contractor is responsible for total management of his work including scheduling, control, and certification of all submittals. The submittal management system provided in these specifications is intended to be a complete system for the Contractor to use to control the quality of materials, equipment and workmanship provided by manufacturers, fabricators, suppliers and subcontractors. The Contractor shall review each submittal for contract compliance. Submittals that comply will be forwarded to the Government. Submittals that do not conform will be returned to the originator to be corrected. The Submittal Register (ENG Form 4288) will be utilized to log and monitor all submittal activities. No construction or installation activities shall be performed prior to required approvals of applicable submittals. The Contractor shall perform a check to assure that all materials and/or equipment have been tested, submitted and approved during the preparatory phase of quality control inspections.

1.2 SUBMITTAL IDENTIFICATION (SD)

Submittals required are identified by SD numbers and titles as follows:

SD-01 Preconstruction Submittals

Tabular lists showing location, features, or other pertinent information regarding products, materials, equipment, or components to be used in the work.

In addition, the following items are included:

Construction Progress Schedule
Health and safety plan
Work plan
Quality control plan
Environmental protection plan
Permits

SD-02 Shop Drawings

Submittals which graphically show relationship of various components of the work, schematic diagrams of systems, details of fabrication, layouts of particular elements, connections, and other relational aspects of the work.

SD-03 Product Data

Catalog cuts, illustrations, schedules, diagrams, performance charts, instructions and brochures illustrating size, physical appearance and other characteristics of materials or equipment for some portion of the work.

Samples of warranty language when the contract requires extended product warranties.

SD-04 Samples

Samples, including both fabricated and unfabricated physical examples of materials, products, and units of work as complete units or as portions of units of work.

Physical examples of materials, equipment or workmanship that illustrate functional and aesthetic characteristics of a material or product and establish standards by which the work can be judged. Color samples from the manufacturer's standard line (or custom color samples if specified) to be used in selecting or approving colors for the project.

Field samples and mock-ups constructed on the project site establish standards by which the ensuring work can be judged. Includes assemblies or portions of assemblies which are to be incorporated into the project and those which will be removed at conclusion of the work.

SD-05 Design Data

Calculations, mix designs, analyses or other data pertaining to a part of work.

SD-06 Test Reports

Report signed by authorized official of testing laboratory that a material, product or system identical to the material, product or system to be provided has been tested in accord with specified requirements. (Testing must have been within three years of date of contract award for the project.)

Report which includes findings of a test required to be performed by the contractor on an actual portion of the work or prototype prepared for the project before shipment to job site.

Report which includes finding of a test made at the job site or on sample taken from the job site, on portion of work during or after installation.

Investigation reports

Daily checklists

Final acceptance test and operational test procedure

SD-07 Certificates

A document, required of the Contractor, or through the Contractor, from a supplier, installer, manufacturer, or other lower tier Contractor, the purpose of which is to confirm the quality or orderly progression of a portion of the work by documenting procedures, acceptability of methods or personnel, qualifications, or other verifications of quality.

Statement signed by an official authorized to certify on behalf of the manufacturer of a product, system or material, attesting that the product, system or material meets specified requirements. The statement must be dated after the award of the contract, must state the Contractor's name and address, must name the project and location, and must list the specific requirements which are being certified.

Confined space entry permits.

SD-08 Manufacturer's Instructions

Preprinted material describing installation of a product, system or material, including special notices and material safety data sheets, if any, concerning impedances, hazards, and safety precautions.

SD-09 Manufacturer's Field Reports

Documentation of the testing and verification actions taken by manufacturer's representative to confirm compliance with manufacturer's standards or instructions.

Factory test reports.

SD-10 Operation and Maintenance Data

Data intended to be incorporated in operations and maintenance manuals.

SD-11 Closeout Submittals

Documentation to record compliance with technical or administrative requirements or to establish an administrative mechanism.

In addition, the following items are included:

As-built drawings

Special warranties

Posted operating instructions

Training plan

1.3 SUBMITTAL CLASSIFICATION

Submittals are classified as follows:

1.3.1 Government Approved

Governmental approval is required for extensions of design, critical materials, deviations, equipment whose compatibility with the entire system must be checked, and other items as designated by the Contracting Officer. Within the terms of the Contract Clause entitled "Specifications and Drawings for Construction," they are considered to be "shop drawings." All submittals noted in the technical specifications and Submittal Register as "G-ED", "G-AE" or "G-RE" are subject to Government Approval.

1.3.2 Information Only (FIO)

All submittals not requiring Government approval will be for information only. They are not considered to be "shop drawings" within the terms of the Contract Clause referred to above. The Contracting Officer has the option to review any submittal.

1.4 APPROVED SUBMITTALS

The Contracting Officer's approval of submittals shall not be construed as a complete check, but will indicate only that the general method of construction, materials, detailing and other information are satisfactory. Approval will not relieve the Contractor of the responsibility for any error which may exist, as the Contractor under the Contractor Quality Control (CQC) requirements of this contract is responsible for dimensions, the design of adequate connections and details, and the satisfactory construction of all work. After submittals have been approved by the Contracting Officer, no resubmittal for the purpose of substituting materials or equipment will be considered unless accompanied by an explanation of why a substitution is necessary.

1.5 DISAPPROVED SUBMITTALS

The Contractor shall make all corrections required by the Contracting Officer and promptly furnish a corrected submittal in the form and number of copies specified for the initial submittal. If the Contractor considers any correction indicated on the submittals to constitute a change to the contract, a notice in accordance with the Contract Clause "Changes" shall be given promptly to the Contracting Officer.

1.6 WITHHOLDING OF PAYMENT

Payment for materials incorporated in the work will not be made if required approvals have not been obtained.

1.7 GENERAL

The Contractor shall make submittals as required by the specifications. The Contracting Officer may request submittals in addition to those specified when deemed necessary to adequately describe the work covered in the respective sections. Units of weights and measures used on all submittals shall be the same as those used in the contract drawings. Each submittal shall be complete and in sufficient detail to allow ready determination of compliance with contract requirements. Prior to submittal, all items shall be checked and approved by the Contractor's Quality Control (CQC) System Manager and each item shall be stamped, signed, and dated by the CQC System Manager indicating action taken. Proposed deviations from the contract requirements shall be clearly identified. Submittals shall include items such as: Contractor's, manufacturer's, or fabricator's drawings; descriptive literature including (but not limited to) catalog cuts, diagrams, operating charts or curves; test reports; test cylinders; samples; O&M manuals (including parts list); certifications; warranties; and other such required submittals. Submittals requiring Government approval shall be scheduled and made prior to the acquisition of the material or equipment covered thereby. Samples remaining upon completion of the work shall be picked up and disposed of in accordance with manufacturer's Material Safety Data Sheets (MSDS) and in compliance with existing laws and regulations.

1.8 SUBMITTAL REGISTER AND ENG FORM 4288 (RMS) SUBMITTAL REGISTER

At the end of this section is a submittal register (submittal form) showing items of equipment and materials for which submittals are required by the specifications; this list may not be all inclusive and additional submittals may be required. The attached submittal register identifies only the submittal section, type of submittal, description of item submitted, paragraph number related to submittal item (section submittal paragraph if none listed), submittal classification (G), and submittal reviewer identifier (ED, AE or RE). Any submittal without a submittal classification and submittal reviewer identifier is considered to be For Information Only (FIO). The submittal register generated by the Government Resident Management System (RMS) Software is used for tracking construction submittals and is referred to as ENG Form 4288 (RMS). The Contractor shall maintain an ENG Form 4288 (RMS) for the project in accordance with the attached ENG Form 4288 (RMS) Instructions. The Contractor will be furnished one (1) set of ENG Forms 4288 (RMS) at the preconstruction conference. Much of the same information contained on the atttached submittal register will be included on the ENG Forms 4288 (RMS) furnished to the Contractor. The Contractor shall complete the appropriate columns as indicated on the attached ENG Form 4288 (RMS) Instructions and return six (6) completed copies to the Contracting Officer for approval within 20 calendar days after the preconstruction conference. The ENG Form 4288 (RMS)will become a part of the contract after approval. Six (6) additional copies of a revised ENG Form 4288(RMS) with ACTIVITY NO. filled in shall be submitted with the completed network analysis system when a network analysis system is a contract requirement. The TRANSMITTAL NUMBER AND ITEM NUMBER shall be left blank for use later to record the respective transmittal and item number corresponding to those listed on the transmittal form entitled: "TRANSMITTAL OF SHOP DRAWINGS, EQUIPMENT DATA, MATERIAL SAMPLES, OR MANUFACTURER'S CERTIFICATES OF COMPLIANCE" (ENG Form 4025). The approved ENG Form 4288 (RMS) will become the scheduling document and will be used to control submittals throughout the life of the contract. The ENG Form 4288 (RMS) and the progress schedules shall be coordinated.

1.9 SCHEDULING

Submittals covering component items forming a system or items that are interrelated shall be scheduled to be coordinated and submitted concurrently. Certifications to be submitted with the pertinent drawings shall be so scheduled. Adequate time (a minimum of 20 calendar days exclusive of mailing time) shall be allowed and shown on the register for review and approval. No delay damages or time extensions will be allowed for time lost in late submittals.

1.10 TRANSMITTAL FORM (ENG FORM 4025)

The sample transmittal form (ENG Form 4025) attached to this section shall be used for submitting both Goverment approved and information only submittals in accordance with the instructions on the reverse side of the form. These forms will be furnished to the Contractor. This form shall be properly completed by filling out all the heading blank spaces and identifying each item submitted. Special care shall be exercised to ensure proper listing of the specification paragraph and/or sheet number of the contract drawings pertinent to the data submitted for each item.

1.11 SUBMITTAL PROCEDURES

Submittals shall be made as follows:

1.11.1 Procedures

1.11.1.1 "G-ED or G-AE" Submittals

All items listed as "G-ED" or "G-AE" submittals in the various sections or on the Submittal Register shall be mailed directly to the addressee shown below as directed. For each submittal, a completed information copy of the attached transmittal form shall also be mailed to the Area Engineer .

Technical Reviewer

Architectureal Alliance
400 Clifton Avenue South
Minneapolis, MN 55403

Each required submittal which is in the form of a drawing shall be submitted as seven (7) prints of the drawing. Drawing prints shall be either blue or black line permanent-type prints on a white background or blueprint and shall be sufficiently clear and suitable for making legible copies.

All catalog and descriptive data shall be submitted in seven (7) copies. Catalog cuts and other descriptive data which have more than one model, size, or type or which shows optional equipment shall be clearly marked to show the model, size, or type and all optional equipment which is proposed for approval. Submittals on component items forming a system or that are interrelated shall be submitted at one time as a single submittal in order to demonstrate that the items have been properly coordinated and will function as a unit.

1.11.1.2 "G-RE" and FIO Submittals

Except as noted below, data for all items listed as "G-RE" or FIO Submittals in the various sections shall be submitted in five (5) copies to the Area Engineer using the transmittal form. Items not to be submitted in multiples, such as samples and test cylinders, shall be submitted to the Area or Resident Engineer (as directed) accompanied by five (5) copies of the transmittal form.

1.11.1.3 Certificates of Compliance

Each certificate shall be signed by an official authorized to certify in behalf of the manufacturing company and shall contain the name and address of the Contractor, the project name and location, and the quantity and date or dates of shipment or delivery to which the certificates apply. Copies of laboratory test reports submitted with certificates shall contain the name and address of the testing laboratory and the date or dates of the tests to which the report applies. Certification shall not be construed as relieving the Contractor from furnishing satisfactory material, if, after tests are performed on selected samples, the material is found not to meet the specific requirements.

1.11.1.4 Purchase Orders

Copies of purchase orders shall be furnished to the Contracting Officer when the Contractor requests assistance for expediting deliveries of equipment or materials, or when requested by the Contracting Officer for the purpose of quality assurance review. Each purchase order issued by the Contractor or his subcontractors for materials and equipment to be incorporated into the project shall (1) be clearly identified with the applicable DA contract number, (2) carry an identifying number, (3) be in sufficient detail to identify the material being purchased, (4) indicate a definite delivery date, and (5) display the DMS priority rating, if applicable.

1.11.1.5 Operation and Maintenance Instructions and/or Manuals

Where required by various technical sections, operations and maintenance instructions and/or manuals with parts lists included shall be provided by the Contractor in quintuplicate, unless otherwise specified, and shall be assembled in three-ring binders with index and tabbed section divider and having a cover indicating the contents by equipment or system name and project title and shall be submitted for approval to the Contracting Officer 90 days prior to final tests of mechanical and electrical systems, unless otherwise specified. Each operation and maintenance manual shall contain a copy of all warranties and a list of local service representatives required by Section 01200 Warranty of Construction. If field testing requires these copies to be revised, they shall be updated and resubmitted for approval within 10 calendar days after completion of tests. The Operations and Maintenance Instructions and/or Manuals shall be shown as a separate activity on the Contractor prepared construction schedule bar chart or network analysis system.

1.11.1.6 Interior/Exterior Finish Sample and Data

All submittals for interior finish samples and data shall be submitted concurrently and all submittals for exterior finish samples and data shall be submitted concurrently.

1.11.2 Deviations

For submittals which include proposed deviations requested by the Contractor, the column "variation" of ENG Form 4025 shall be checked. The Contractor shall set forth in writing the reason for any deviations and annotate such deviations on the submittal. The Government reserves the right to rescind inadvertent approval of submittals containing unnoted deviations.

1.12 CONTROL OF SUBMITTALS

The Contractor shall carefully control his procurement operations to ensure that each individual submittal is made on or before the Contractor scheduled submittal date shown on the approved "Submittal Register."

1.13 GOVERNMENT APPROVED SUBMITTALS

Upon completion of review of submittals requiring Government approval, the submittals will be identified as having received approval by being so stamped and dated.

1.13.1 "G-AE" or "G-ED" Submittals

The drawing print and five (5) sets of all catalog data and descriptive literature and drawing prints will be retained by the Contracting Officer and two (2) sets of catalog data and descriptive literature and drawing prints will be returned to the Contractor.

1.13.2 "G-RE" Submittals

Two (2) copies of "G-RE" submittals for approval will be returned to the Contractor except for samples, test cylinders, and O&M manuals for which two (2) copies of the transmittal form only will be returned to the Contractor.

1.14 INFORMATION ONLY SUBMITTALS

Normally submittals for information only will not be returned. Approval of the Contracting Officer is not required on information only submittals. The Government reserves the right to require the Contractor to resubmit any item found not to comply with the contract. This does not relieve the Contractor from the obligation to furnish material conforming to the plans and specifications; will not prevent the Contracting Officer from requiring removal and replacement of nonconforming material incorporated in the work; and does not relieve the Contractor of the requirement to furnish samples for testing by the Government laboratory or for check testing by the Government in those instances where the technical specifications so prescribe.

1.15 STAMPS

Stamps used by the Contractor on the submittal data to certify that the submittal meets contract requirements shall be similar to the following:

CONTRACTOR

(Firm Name)

_____ Approved

_____ Approved with corrections as noted on submittal data and/or attached sheets(s).

SIGNATURE: _____

TITLE: _____

DATE: _____

INSTRUCTIONS
ENG FORM 4288 (RMS)

1. The Contractor shall utilize the ENG Form 4288 (RMS) generated by the Government Residential Management System (RMS)software for tracking construction submittals. The Submittal Register information, columns (c) thru (f) from the Submittal Forms furnished with this solicitation, [will be utilized by the Government] to generate the ENG Form 4288 (RMS). [The Government will furnish the Contractor a hard copy of the ENG Form 4288 (RMS) at the preconstruction conference.]. The ENG Form 4288 (RMS) includes the following items and parties responsible for completing the information required on the ENG Form 4288 (RMS):

a. Activity Number: will be provided by the Contractor from his Network Analysis, if required, and when a network analysis is accepted.

b. Transmittal Number and Item Number: will be provided by the Contractor from ENG Form 4025 for each item.

c. Specification Paragraph Number: will be provided by the Government from the Submittal Register from column entitled "Specification Paragraph Number".

d. Description of Submittal: will be provided by the Government from the Submittal Register from column entitled "Description of Item Submitted".

e. Type of Submittal: will be provided by the Government from the Submittal Register from column entitled "Type of Submittal" or "Description of Item Submitted".

f. Classification: will be provided by the Government from the Submittal Register from column entitled "Classification".

g. Reviewing Office - Reviewer: will be provided by the Government from the Submittal Register from column entitled "Classification" or "Reviewer".

h. Contractor Schedule Dates: the Contractor will provide schedule dates for

"Submit Needed By" (Date the Contractor expects to submit an item. It is the Contractors responsibility to calculate the lead time needed for the government approval. Note if resubmittal is required it is the Contractors responsibility to make all adjustments necessary to meet the contract completion date.)

"Approval Needed By" (date the Contractor can receive approval and still obtain the material by need date.), and

"Material Needed By" (date that the material is needed at the site. If there is a network analysis it should reflect that date on the analysis.)

i. Contractor Action: Includes the following items: "Code" and "Submit to the Corps". These items will be completed by the Contractor. The action codes will be one of the following:

A - Approved as submitted.
B - Approved, except as noted.

C - Approved, except as noted. Refer to attached sheet resubmission required.
G - Other (specify)

j. Government Action: This item includes a Government Action "Code" and "Date" and is reserved for Government use. The Government reserves the right to review any submittal for contract compliance. Receipt of an Action Code "F - Receipt Acknowledged" or failure of the Contractor to receive an Action Code by the Government, does not mean that the submittal is in compliance with the contract requirements. When used by the Government, the action code will be one of the following:

A - Approved as submitted.
B - Approved except as noted on drawings.
C - Approved, except as noted on drawings. Refer to attached ____ sheet resubmission required.
D - Will be returned by separate correspondence.
E - Disapproved (See Attached).
F - Receipt Acknowledged.
Fx - Receipt acknowledged, does not comply as noted with contract requirements.
G - Other (specify).

2. Reviewer Abbreviation code will be as follows;

G-ED, G-AE or G-RE - Government Approved
For Information Only - Any submittal without a Government Approved abbreviation code.

INSTRUCTIONS
ENG FORM 4025

1. DATE at the top of form will be the date submitted to the Government which is to be completed by the Contractor.

2. TRANSMITTAL NO. Each new transmittal (i.e. G-AE, G-ED, G-RE or FIO) shall be numbered consecutively in the space provided in "Transmittal No.". This number will be the identifying symbol for each submittal. Example: "G-ED-001", "G-AE-002" "G-RE-003", "FIO-004", etc. For each new submittal or for a resubmittal, the appropriate box must be marked. Resubmittals must be designated by their original sequential number followed by an ".1", ".2", etc. for each sequential resubmittal. Example: "G-ED-001.1" (previous submittal No. G-ED-001).

3. TO: Box will contain the name and address of the office which will review the submittal. The name and address should be given in paragraph 3.5. Contractor is to complete this box after reviewing the classification provided by the government on Eng Form 4288 column f and determining the proper address.

4. FROM: Box will be the name and address of the Contractor. Contractor is to complete this box.

5. CONTRACT NO. box will contain the Contractors construction contract number (e.g., DACXXX-XX-C-XXXX).

6. CHECK ONE box will be completed by the Contractor with one box marked. If a resubmittal is provided last transmittal number will be added.

7. SPECIFICATION SECTION NO. box will be completed by the Contractor. The number will be the five digit number found in the specifications. No more than one section will be covered with each transmittal.

8. PROJECT TITLE AND LOCATION box will be completed by the Contractor.

9. Column a, will be completed by the Contractor and will contain a different number for each item submitted in that transmittal. Once a number is assigned to an item it will remain the same even if there is a resubmittal.

10. Column b, will be completed by the Contractor. The description of each item on this form will include the descriptions provided on the submittal register plus any other data necessary to describe the item. The Contractor shall submit each submittal register item all at once on one transmittal if possible. If a submittal register item can not be submitted all at once Contractor should note that in the remarks box. If a submittal register item requires several items, description shall contain submittal register description plus any additional specific descriptions. Additional items not on the submittal register will be noted in the remarks box.

11. Column c, will be completed by the Contractor. The information will be the appropriate submittal description number as described this Section or shown on the submittal register (e.g. SD-XX).

12. Column d, will be completed by the Contractor. The number of copies will be determined by the Contractor after review of submittal register for the classification of the item and after review of paragraph: SUBMITTAL

PROCEDURES of this Section.

13. Column e, will be completed by the Contractor. The Contractor shall state all applicable paragraph numbers.

14. Column f, will be completed by the Contractor. The Contractor shall state all applicable drawing sheet numbers.

15. Column g, will be completed by the Contractor. The action codes will be one of the following:

A - Approved as submitted.
B - Approved, except as noted.
C - Approved, except as noted. Refer to attached sheet resubmission required.
G - Other (specify)

16. Column h, will be completely by the Contractor. A check shall be placed in this column when a submittal is not in accordance with the plans and specifications also, a written statement to that effect shall be included in the space provided for "Remarks".

17. Column i, is reserved for Government use and may or may not be provided. When used by the Government, the action code will be one of the following:

A - Approved as submitted.
B - Approved except as noted on drawings.
C - Approved, except as noted on drawings. Refer to attached ____ sheet resubmission required.
D - Will be returned by separate correspondence.
E - Disapproved (See Attached).
F - Receipt Acknowledged.
Fx - Receipt acknowledged, does not comply as noted with contract requirements.
G - Other (specify).

18. REMARKS box self explained.

19. Contractor must sign all Eng Form 4025 certifying conformance.

20. Section II will be completed by the Government. Contractor is not to write in this space.

See reverse side of ENG Form 4025 for additional instructions.

-- End of Section --

SUBMITTAL REGISTER

CONTRACT NO.

TITLE AND LOCATION
Consolidated Lodging Facility, Phase III, Minneapolis, St Paul MN

CONTRACTOR

ACTIVITY NO	TRANSMITTAL NO	SPEC SECT	DESCRIPTION ITEM SUBMITTED	PARAGRAPH #	CLASSIFICATION	GOVT OR A/E REVWR	CONTRACTOR: SCHEDULE DATES			CONTRACTOR ACTION			APPROVING AUTHORITY					
							SUBMIT	APPROVAL NEEDED BY	MATERIAL NEEDED BY	ACTION CODE	DATE OF ACTION	DATE FWD TO APPR AUTH/ DATE RCD FROM CONTR	DATE FWD TO OTHER REVIEWER	DATE RCD FROM OTH REVIEWER	ACTION CODE	DATE OF ACTION	MAILED TO CONTR/ DATE RCD FRM APPR AUTH	REMARKS
(a)	(b)	(c)	(d)	(e)	(f)		(g)	(h)	(i)	(j)	(k)	(l)	(m)	(n)	(o)	(p)	(q)	(r)
		00800	SD-02 Shop Drawings															
			Equipment Room Drawings		G	A												
		01200	SD-11 Closeout Submittals															
			Equipment Warranty Booklet	1.2.5														
		01400	SD-01 Preconstruction Submittals															
			Accident Prevention Plan		G	RE												
			SD-07 Certificates															
			Qualifications		G	RE												
		02300	SD-08 Manufacturer's Instructions															
			Earthwork															
			SD-09 Manufacturer's Field															
			Reports															
			Testing	3.12														
			Testing	3.12														
		02510	SD-06 Test Reports															
			Installation;	3.1														
			SD-08 Manufacturer's Instructions															
			Waste Water Disposal Method;															
			Satisfactory Installation															
			SD-09 Manufacturer's Field															
			Reports															
			Bacteriological Disinfection;	3.3.1														
			Manufacturer's Representative;															
			Meters;	2.6.3														
			Portland Cement; GA															
			Joints	2.3														

SUBMITTAL REGISTER

CONTRACT NO.

TITLE AND LOCATION
Consolidated Lodging Facility, Phase III, Minneapolis, St Paul MN

CONTRACTOR

ACTIVITY NO	TRANSMITTAL NO	SPEC SECT	DESCRIPTION ITEM SUBMITTED	PARAGRAPH #	CLASSIFICATION	GOVT OR A/E REVWR	CONTRACTOR: SCHEDULE DATES			CONTRACTOR ACTION			APPROVING AUTHORITY					
							SUBMIT	APPROVAL NEEDED BY	MATERIAL NEEDED BY	ACTION CODE	DATE OF ACTION	DATE FWD TO APPR AUTH/ DATE RCD FROM CONTR	DATE FWD TO OTHER REVIEWER	DATE RCD FROM OTH REVIEWER	ACTION CODE	DATE OF ACTION	MAILED TO CONTR/ DATE RCD FRM APPR AUTH	REMARKS
(a)	(b)	(c)	(d)	(e)	(f)		(g)	(h)	(i)	(j)	(k)	(l)	(m)	(n)	(o)	(p)	(q)	(r)
		02621	Filter Fabric															
			FIO															
			Pipe for Subdrains	2.1														
			Filter Fabric															
			FIO															
		02630	SD-06 Test Reports															
			Placing Pipe; GA															
			Pipeline Testing	3.7														
			Hydrostatic Test on Watertight	2.4														
			Joints															
			GA, Determination of Density															
			GA, and Frame and Cover for															
			Gratings															
		02722	SD-09 Manufacturer's Field															
			Reports															
			Sampling and testing	1.4														
			Field Density Tests	1.4.2.4														
		02748	SD-09 Manufacturer's Field															
			Reports															
			Tests															
			FIO															
			Waybills and Delivery Tickets															
			FIO															
		02763	SD-03 Product Data															
			Equipment	1.4														
			GA,															

SUBMITTAL REGISTER

CONTRACT NO.

TITLE AND LOCATION
Consolidated Lodging Facility, Phase III, Minneapolis, St Paul MN

CONTRACTOR

ACTIVITY NO	TRANSMITTAL NO	SPEC SECT	DESCRIPTION ITEM SUBMITTED	PARAGRAPH #	CLASSIFICATION	GOVT OR A/E REVWR	CONTRACTOR: SCHEDULE DATES			CONTRACTOR ACTION			APPROVING AUTHORITY					
							SUBMIT	APPROVAL NEEDED BY	MATERIAL NEEDED BY	ACTION CODE	DATE OF ACTION	DATE FWD TO APPR AUTH/ DATE RCD FROM CONTR	DATE FWD TO OTHER REVIEWER	DATE RCD FROM OTH REVIEWER	ACTION CODE	DATE OF ACTION	MAILED TO CONTR/ DATE RCD FRM APPR AUTH	REMARKS
(a)	(b)	(c)	(d)	(e)	(f)		(g)	(h)	(i)	(j)	(k)	(l)	(m)	(n)	(o)	(p)	(q)	(r)
		02763	Composition Requirements	2.2.1														
			SD-06 Test Reports															
			GA															
			Sampling and Testing															
			SD-07 Certificates															
			GA															
			Volatile Organic Compound	2.2.3														
			(VOC)															
		02770	SD-09 Manufacturer's Field															
			Reports															
			Field Quality Control; GA															
			Concrete; GA															
		02811	SD-01 Preconstruction Submittals															
			Framed Instructions	3.3														
			FIO															
			Field Training	3.4														
			Design Analysis and Calculations															
			GA															
			Spare Parts															
			SD-04 Samples															
			Sprinkler System															
			GA1															
			SD-09 Manufacturer's Field															
			Reports															
			Field Tests	3.2														
			FIO															

SUBMITTAL REGISTER

CONTRACT NO.

TITLE AND LOCATION
Consolidated Lodging Facility, Phase III, Minneapolis, St Paul MN

CONTRACTOR

ACTIVITY NO	TRANSMITTAL NO	SPEC SECT	DESCRIPTION ITEM SUBMITTED	PARAGRAPH #	CLASSIFICATION	GOVT OR A/E REVWR	CONTRACTOR: SCHEDULE DATES			CONTRACTOR ACTION			APPROVING AUTHORITY					
							SUBMIT	APPROVAL NEEDED BY	MATERIAL NEEDED BY	ACTION CODE	DATE OF ACTION	DATE FWD TO APPR AUTH/ DATE RCD FROM CONTR	DATE FWD TO OTHER REVIEWER	DATE RCD FROM OTH REVIEWER	ACTION CODE	DATE OF ACTION	MAILED TO CONTR/ DATE RCD FRM APPR AUTH	REMARKS
(a)	(b)	(c)	(d)	(e)	(f)		(g)	(h)	(i)	(j)	(k)	(l)	(m)	(n)	(o)	(p)	(q)	(r)
		02811	Sprinkler System															
			FIO															
			Sprinkler System															
			FIO															
		02921	SD-01 Preconstruction Submittals															
			Equipment															
			FIO															
			Surface Erosion Control Material	2.8														
			Chemical Treatment Material															
			SD-08 Manufacturer's Instructions															
			Delivery	1.4.1														
			FIO															
			Finished Grade and Topsoil	3.2.1														
			Topsoil	2.2														
			SD-09 Manufacturer's Field															
			Reports															
			Soil Test	3.1.4														
			FIO															
			Seed	2.1														
			FIO															
			Topsoil	2.2														
			pH Adjuster	2.3.1														
			Fertilizer	2.3.2														
			Organic Material	2.3.4														
			Soil Conditioner	2.3.5														
			Mulch	2.4														

SUBMITTAL REGISTER

CONTRACT NO.

TITLE AND LOCATION
Consolidated Lodging Facility, Phase III, Minneapolis, St Paul MN

CONTRACTOR

ACTIVITY NO	TRANSMITTAL NO	SPEC SECT	DESCRIPTION ITEM SUBMITTED	PARAGRAPH #	CLASSIFICATION	GOVT OR A/E REVWR	CONTRACTOR: SCHEDULE DATES			CONTRACTOR ACTION			APPROVING AUTHORITY					
							SUBMIT	APPROVAL NEEDED BY	MATERIAL NEEDED BY	ACTION CODE	DATE OF ACTION	DATE FWD TO APPR AUTH/ DATE RCD FROM CONTR	DATE FWD TO OTHER REVIEWER	DATE RCD FROM OTH REVIEWER	ACTION CODE	DATE OF ACTION	MAILED TO CONTR/ DATE RCD FRM APPR AUTH	REMARKS
(a)	(b)	(c)	(d)	(e)	(f)		(g)	(h)	(i)	(j)	(k)	(l)	(m)	(n)	(o)	(p)	(q)	(r)
		02921	Mulch	2.4														
			Quantity Check	3.5														
			Seed Establishment Period	3.9														
			Maintenance Record	3.9.3.5														
			Application of Pesticide	3.6														
		02922	SD-08 Manufacturer's Instructions															
			Finished Grade and Topsoil	3.2.1														
			FIO															
			Topsoil	2.2														
			Soil Test															
			GA															
			Sod	2.1														
			FIO															
			Topsoil	2.2														
			pH Adjuster	2.3.1														
			Fertilizer	2.3.2														
			Organic Material	2.3.4														
			Soil Conditioner	2.3.5														
			Pesticide	2.5														
			Quantity Check	3.5														
			FIO															
			Sod Establishment Period	3.9														
			Maintenance Record	3.9.3.5														
			Application of Pesticide	3.6														
		02930	SD-01 Preconstruction Submittals															
			Geotextile	2.5														

SUBMITTAL REGISTER

CONTRACT NO.

TITLE AND LOCATION
Consolidated Lodging Facility, Phase III, Minneapolis, St Paul MN

CONTRACTOR

ACTIVITY NO	TRANSMITTAL NO	SPEC SECT	DESCRIPTION ITEM SUBMITTED	PARAGRAPH #	CLASSIFICATION	GOVT OR A/E REVWR	CONTRACTOR: SCHEDULE DATES			CONTRACTOR ACTION			APPROVING AUTHORITY					
							SUBMIT	APPROVAL NEEDED BY	MATERIAL NEEDED BY	ACTION CODE	DATE OF ACTION	DATE FWD TO APPR AUTH/ DATE RCD FROM CONTR	DATE FWD TO OTHER REVIEWER	DATE RCD FROM OTH REVIEWER	ACTION CODE	DATE OF ACTION	MAILED TO CONTR/ DATE RCD FRM APPR AUTH	REMARKS
(a)	(b)	(c)	(d)	(e)	(f)		(g)	(h)	(i)	(j)	(k)	(l)	(m)	(n)	(o)	(p)	(q)	(r)
		02930	GA															
			Chemical Treatment Material															
			FIO															
			SD-07 Certificates															
			Equipment															
			FIO															
			SD-08 Manufacturer's Instructions															
			Delivery	1.4.1														
			FIO															
			Finished Grade, Topsoil and	3.2.1														
			Underground Utilities															
			SD-09 Manufacturer's Field															
			Reports															
			Soil Test															
			GA															
			Percolation Test	3.1.4.1														
			Plant Material	2.1														
			FIO															
			Topsoil	2.2														
			pH Adjuster	2.3.1														
			Fertilizer	2.3.2														
			Organic Material	2.3.3														
			Soil Conditioner	2.3.4														
			Organic Mulch	2.4.2														
			Pesticide	2.14														
			Plant Establishment Period	3.9														

SUBMITTAL REGISTER

CONTRACT NO.

TITLE AND LOCATION
Consolidated Lodging Facility, Phase III, Minneapolis, St Paul MN

CONTRACTOR

ACTIVITY NO	TRANSMITTAL NO	SPEC SECT	DESCRIPTION ITEM SUBMITTED	PARAGRAPH #	CLASSIFICATION	GOVT OR A/E REVWR	CONTRACTOR: SCHEDULE DATES			CONTRACTOR ACTION			APPROVING AUTHORITY					
							SUBMIT	APPROVAL NEEDED BY	MATERIAL NEEDED BY	ACTION CODE	DATE OF ACTION	DATE FWD TO APPR AUTH/ DATE RCD FROM CONTR	DATE FWD TO OTHER REVIEWER	DATE RCD FROM OTH REVIEWER	ACTION CODE	DATE OF ACTION	MAILED TO CONTR/ DATE RCD FRM APPR AUTH	REMARKS
(a)	(b)	(c)	(d)	(e)	(f)		(g)	(h)	(i)	(j)	(k)	(l)	(m)	(n)	(o)	(p)	(q)	(r)
		02930	FIO															
			Maintenance Record	3.9.2.6														
			GA															
			Application of Pesticide	3.7														
			Maintenance Instructions	3.9.5														
			FIO															
		03200	SD-04 Samples															
			Concrete Reinforcement System															
		03300	SD-08 Manufacturer's Instructions															
			Mixture Proportions	1.9														
			GA1															
			SD-09 Manufacturer's Field															
			Reports															
			Testing and Inspection for	3.17														
			Contractor Quality Control															
			FIO															
		03410	SD-01 Preconstruction Submittals															
			Floor and Roof Units															
			FIO															
			SD-04 Samples															
			Floor and Roof Units															
			GA1															
		03413	SD-01 Preconstruction Submittals															
			Calculations	1.3.5														
			FIO															
			Mix Design															

SUBMITTAL REGISTER

CONTRACT NO.

TITLE AND LOCATION
Consolidated Lodging Facility, Phase III, Minneapolis, St Paul MN

CONTRACTOR

ACTIVITY NO	TRANSMITTAL NO	SPEC SECT	DESCRIPTION ITEM SUBMITTED	PARAGRAPH #	CLASSIFICATION	GOVT OR A/E REVWR	CONTRACTOR: SCHEDULE DATES			CONTRACTOR ACTION			APPROVING AUTHORITY					
							SUBMIT	APPROVAL NEEDED BY	MATERIAL NEEDED BY	ACTION CODE	DATE OF ACTION	DATE FWD TO APPR AUTH/ DATE RCD FROM CONTR	DATE FWD TO OTHER REVIEWER	DATE RCD FROM OTH REVIEWER	ACTION CODE	DATE OF ACTION	MAILED TO CONTR/ DATE RCD FRM APPR AUTH	REMARKS
(a)	(b)	(c)	(d)	(e)	(f)		(g)	(h)	(i)	(j)	(k)	(l)	(m)	(n)	(o)	(p)	(q)	(r)
		03413	SD-04 Samples															
			Architectural Concrete System															
			GA1															
			Precast Concrete Units	2.2														
			GA1															
			Manufacturer's Qualifications															
			FIO															
		04200	SD-01 Preconstruction Submittals															
			Brick															
			GA1															
			Insulation	2.17														
			FIO															
			SD-09 Manufacturer’s Field															
			Reports															
			Efflorescence Test	3.26.3														
			FIO															
			Field Testing of Mortar	3.26.1														
			Field Testing of Grout	3.26.2														
			Prism tests	3.26.4														
			Masonry Cement															
			Fire-rated CMU	2.4.3														
			Special Inspection	1.5														
			GA															
			Brick															
			FI0															
			Concrete Brick	2.3														

SUBMITTAL REGISTER

CONTRACT NO.

TITLE AND LOCATION
Consolidated Lodging Facility, Phase III, Minneapolis, St Paul MN

CONTRACTOR

ACTIVITY NO	TRANSMITTAL NO	SPEC SECT	DESCRIPTION ITEM SUBMITTED	PARAGRAPH #	CLASSIFICATION	GOVT OR A/E REVWR	CONTRACTOR: SCHEDULE DATES			CONTRACTOR ACTION			APPROVING AUTHORITY					
							SUBMIT	APPROVAL NEEDED BY	MATERIAL NEEDED BY	ACTION CODE	DATE OF ACTION	DATE FWD TO APPR AUTH/ DATE RCD FROM CONTR	DATE FWD TO OTHER REVIEWER	DATE RCD FROM OTH REVIEWER	ACTION CODE	DATE OF ACTION	MAILED TO CONTR/ DATE RCD FRM APPR AUTH	REMARKS
(a)	(b)	(c)	(d)	(e)	(f)		(g)	(h)	(i)	(j)	(k)	(l)	(m)	(n)	(o)	(p)	(q)	(r)
		04200	FIO															
			Concrete Masonry Units (CMU)	2.4														
			Control Joint Keys	2.15														
			Anchors, Ties, and Bar	2.12														
			Positioners															
			Expansion-Joint Materials	2.16														
			Joint Reinforcement	2.13														
			Reinforcing Steel Bars and Rods	2.14														
			Masonry Cement															
			Mortar Coloring															
			Insulation	2.17														
			Insulation	2.17														
			Mortar Admixtures															
			Grout Admixtures															
			Stone Items	2.9														
			GA1															
			Clay or Shale Brick	2.2														
			Portable Panel															
			Refer to requirements of 04220															
			NONBEARING MASONRY															
			VENEER/STEEL STUD WALLS															
		04220	SD-01 Preconstruction Submittals															
			Masonry Veneer/Steel Stud Wall															
			System:															

SUBMITTAL REGISTER

CONTRACT NO.

TITLE AND LOCATION
Consolidated Lodging Facility, Phase III, Minneapolis, St Paul MN

CONTRACTOR

ACTIVITY NO	TRANSMITTAL NO	SPEC SECT	DESCRIPTION ITEM SUBMITTED	PARAGRAPH #	CLASSIFICATION	GOVT OR A/E REVWR	CONTRACTOR: SCHEDULE DATES			CONTRACTOR ACTION			APPROVING AUTHORITY					
							SUBMIT	APPROVAL NEEDED BY	MATERIAL NEEDED BY	ACTION CODE	DATE OF ACTION	DATE FWD TO APPR AUTH/ DATE RCD FROM CONTR	DATE FWD TO OTHER REVIEWER	DATE RCD FROM OTH REVIEWER	ACTION CODE	DATE OF ACTION	MAILED TO CONTR/ DATE RCD FRM APPR AUTH	REMARKS
(a)	(b)	(c)	(d)	(e)	(f)		(g)	(h)	(i)	(j)	(k)	(l)	(m)	(n)	(o)	(p)	(q)	(r)
		04220	Refer to requirements of 05400															
			COLD-FORMED STEEL															
			FRAMING.															
			SD-04 Samples															
			Masonry Veneer/Steel Stud Wall															
			System															
			Refer to requirements of 05400															
			COLD-FORMED STEEL															
			FRAMING.															
			Brick															
			FIO															
			Insulation															
			Exterior Sheathing															
			Moisture Barrier															
			Vapor Barrier															
			Veneer Anchors															
			FIO.															
		05120	SD-04 Samples															
			Structural Steel System															
			GA1															
			Structural Connections	3.2.1														
		05300	SD-01 Preconstruction Submittals															
			Deck Units	2.1														
			FIO															
			SD-04 Samples															
			Deck Units	2.1														

SUBMITTAL REGISTER

CONTRACT NO.

TITLE AND LOCATION
Consolidated Lodging Facility, Phase III, Minneapolis, St Paul MN

CONTRACTOR

ACTIVITY NO	TRANSMITTAL NO	SPEC SECT	DESCRIPTION ITEM SUBMITTED	PARAGRAPH #	CLASSIFICATION	GOVT OR A/E REVWR	CONTRACTOR: SCHEDULE DATES			CONTRACTOR ACTION			APPROVING AUTHORITY					
							SUBMIT	APPROVAL NEEDED BY	MATERIAL NEEDED BY	ACTION CODE	DATE OF ACTION	DATE FWD TO APPR AUTH/ DATE RCD FROM CONTR	DATE FWD TO OTHER REVIEWER	DATE RCD FROM OTH REVIEWER	ACTION CODE	DATE OF ACTION	MAILED TO CONTR/ DATE RCD FRM APPR AUTH	REMARKS
(a)	(b)	(c)	(d)	(e)	(f)		(g)	(h)	(i)	(j)	(k)	(l)	(m)	(n)	(o)	(p)	(q)	(r)
		05300	GA1															
			Accessories	2.5														
			Attachments	3.3														
			Holes and Openings	3.4														
		05400	SD-04 Samples															
			Cold-Formed Steel Framing															
			GA1															
		05500	SD-04 Samples															
			Miscellaneous Metal Items															
			GA1															
			Grading and Marking	2.1.1														
			FIO															
		06200	SD-01 Preconstruction Submittals															
			GA1															
			Wood Items and Trim	2.1														
			FIO															
			SD-04 Samples															
			Finish Carpentry															
			GA1															
			Wood Trim															
			GA1															
			Plastic Laminate															
			Materials															
			FIO															
		07131	SD-04 Samples															
			Waterproofing System															

SUBMITTAL REGISTER

CONTRACT NO.

TITLE AND LOCATION
Consolidated Lodging Facility, Phase III, Minneapolis, St Paul MN

CONTRACTOR

ACTIVITY NO	TRANSMITTAL NO	SPEC SECT	DESCRIPTION ITEM SUBMITTED	PARAGRAPH #	CLASSIFICATION	GOVT OR A/E REVWR	CONTRACTOR: SCHEDULE DATES			CONTRACTOR ACTION			APPROVING AUTHORITY					
							SUBMIT	APPROVAL NEEDED BY	MATERIAL NEEDED BY	ACTION CODE	DATE OF ACTION	DATE FWD TO APPR AUTH/ DATE RCD FROM CONTR	DATE FWD TO OTHER REVIEWER	DATE RCD FROM OTH REVIEWER	ACTION CODE	DATE OF ACTION	MAILED TO CONTR/ DATE RCD FRM APPR AUTH	REMARKS
(a)	(b)	(c)	(d)	(e)	(f)		(g)	(h)	(i)	(j)	(k)	(l)	(m)	(n)	(o)	(p)	(q)	(r)
		07131	GA															
			SD-06 Test Reports															
			Installation															
			FIO															
			Materials	2.1														
			FIO															
		07220	SD-06 Test Reports															
			Application of Insulation	3.7														
			FIO															
			SD-08 Manufacturer’s Instructions															
			Inspection															
			FIO															
			Insulation	2.2														
			FIO															
			; FIO															
		07413	SD-04 Samples															
			Siding	2.1														
			GA1															
			Siding	2.1														
			FIO															
			Installation	3.1														
			Accessories	2.3														
			Siding	2.1														
			GA1															
			Fasteners	2.4														
			FIO															

SUBMITTAL REGISTER

CONTRACT NO.

TITLE AND LOCATION
Consolidated Lodging Facility, Phase III, Minneapolis, St Paul MN

CONTRACTOR

ACTIVITY NO	TRANSMITTAL NO	SPEC SECT	DESCRIPTION ITEM SUBMITTED	PARAGRAPH #	CLASSIFICATION	GOVT OR A/E REVWR	CONTRACTOR: SCHEDULE DATES			CONTRACTOR ACTION			APPROVING AUTHORITY					
							SUBMIT	APPROVAL NEEDED BY	MATERIAL NEEDED BY	ACTION CODE	DATE OF ACTION	DATE FWD TO APPR AUTH/ DATE RCD FROM CONTR	DATE FWD TO OTHER REVIEWER	DATE RCD FROM OTH REVIEWER	ACTION CODE	DATE OF ACTION	MAILED TO CONTR/ DATE RCD FRM APPR AUTH	REMARKS
(a)	(b)	(c)	(d)	(e)	(f)		(g)	(h)	(i)	(j)	(k)	(l)	(m)	(n)	(o)	(p)	(q)	(r)
		07413	Sealant	2.8														
		07421	SD-01 Preconstruction Submittals															
			Calculations															
			FIO															
			SD-04 Samples															
			Panel System															
			GA1															
			Panel															
			FIO															
			Installation	3.1														
			Accessories	2.4														
			Panel															
			GA1															
			Sealant	2.9														
			FIO															
		07530	SD-04 Samples															
			Roofing System															
			GA															
			SD-06 Test Reports															
			Installation															
			FIO															
			SD-08 Manufacturer’s Instructions															
			Inspection															
			FIO															
			Materials															
			FIO															

SUBMITTAL REGISTER

CONTRACT NO.

TITLE AND LOCATION
Consolidated Lodging Facility, Phase III, Minneapolis, St Paul MN

CONTRACTOR

ACTIVITY NO	TRANSMITTAL NO	SPEC SECT	DESCRIPTION ITEM SUBMITTED	PARAGRAPH #	CLASSIFICATION	GOVT OR A/E REVWR	CONTRACTOR: SCHEDULE DATES			CONTRACTOR ACTION			APPROVING AUTHORITY					
							SUBMIT	APPROVAL NEEDED BY	MATERIAL NEEDED BY	ACTION CODE	DATE OF ACTION	DATE FWD TO APPR AUTH/ DATE RCD FROM CONTR	DATE FWD TO OTHER REVIEWER	DATE RCD FROM OTH REVIEWER	ACTION CODE	DATE OF ACTION	MAILED TO CONTR/ DATE RCD FRM APPR AUTH	REMARKS
(a)	(b)	(c)	(d)	(e)	(f)		(g)	(h)	(i)	(j)	(k)	(l)	(m)	(n)	(o)	(p)	(q)	(r)
		07600	SD-04 Samples															
			Materials	2.1														
			GA															
		07720	SD-01 Preconstruction Submittals															
			Roof Hatch															
			FIO															
			Smoke Vent															
			SD-04 Samples															
			Roof Hatch															
			FIO															
			Smoke Vent															
		07810	SD-01 Preconstruction Submittals															
			Fireproofing Material															
			GA															
			SD-09 Manufacturer’s Field															
			Reports															
			UL Test Assembly															
			FIO															
			Installer Qualifications	1.5														
			FIO															
			Manufacturer's Inspection															
			Spray-Applied Fireproofing															
			GA															
		07840	SD-04 Samples															
			Firestopping Materials	2.1														
			GA															

SUBMITTAL REGISTER

CONTRACT NO.

TITLE AND LOCATION
Consolidated Lodging Facility, Phase III, Minneapolis, St Paul MN

CONTRACTOR

ACTIVITY NO	TRANSMITTAL NO	SPEC SECT	DESCRIPTION ITEM SUBMITTED	PARAGRAPH #	CLASSIFICATION	GOVT OR A/E REVWR	CONTRACTOR: SCHEDULE DATES			CONTRACTOR ACTION			APPROVING AUTHORITY					
							SUBMIT	APPROVAL NEEDED BY	MATERIAL NEEDED BY	ACTION CODE	DATE OF ACTION	DATE FWD TO APPR AUTH/ DATE RCD FROM CONTR	DATE FWD TO OTHER REVIEWER	DATE RCD FROM OTH REVIEWER	ACTION CODE	DATE OF ACTION	MAILED TO CONTR/ DATE RCD FRM APPR AUTH	REMARKS
(a)	(b)	(c)	(d)	(e)	(f)		(g)	(h)	(i)	(j)	(k)	(l)	(m)	(n)	(o)	(p)	(q)	(r)
		07840	Firestopping Materials	2.1														
			FIO															
		07900	SD-01 Preconstruction Submittals															
			Sealant	2.5														
			FIO															
			Sealant	2.5														
			FIO															
		08110	SD-04 Samples															
			Steel Doors and Frames															
			GA															
			SD-09 Manufacturer’s Field															
			Reports															
			Fire Rated Doors	2.2														
			FIO															
		08120	SD-01 Preconstruction Submittals															
			Aluminum Frames and Doors															
			FIO															
			SD-04 Samples															
			Aluminum Frames and Doors															
			GA1															
			SD-06 Test Reports															
			Installation	3.1.2														
			FIO															
			Cleaning															
			SD-09 Manufacturer’s Field															
			Reports															

SUBMITTAL REGISTER

CONTRACT NO.

TITLE AND LOCATION
Consolidated Lodging Facility, Phase III, Minneapolis, St Paul MN

CONTRACTOR

ACTIVITY NO	TRANSMITTAL NO	SPEC SECT	DESCRIPTION ITEM SUBMITTED	PARAGRAPH #	CLASSIFICATION	GOVT OR A/E REVWR	CONTRACTOR: SCHEDULE DATES			CONTRACTOR ACTION			APPROVING AUTHORITY					
							SUBMIT	APPROVAL NEEDED BY	MATERIAL NEEDED BY	ACTION CODE	DATE OF ACTION	DATE FWD TO APPR AUTH/ DATE RCD FROM CONTR	DATE FWD TO OTHER REVIEWER	DATE RCD FROM OTH REVIEWER	ACTION CODE	DATE OF ACTION	MAILED TO CONTR/ DATE RCD FRM APPR AUTH	REMARKS
(a)	(b)	(c)	(d)	(e)	(f)		(g)	(h)	(i)	(j)	(k)	(l)	(m)	(n)	(o)	(p)	(q)	(r)
		08120	Aluminum Doors															
			FIO															
			Installer Qualifications															
			FIO															
			Finishes	2.1.1														
			GA1															
		08210	SD-04 Samples															
			Wood Doors															
			GA1															
			Factory Stained and Coated															
			Finish															
			GA1															
		08330	SD-01 Preconstruction Submittals															
			Overhead Rolling Door Unit															
			FIO															
			SD-04 Samples															
			Overhead Rolling Door Unit															
			GA1															
			SD-06 Test Reports															
			Overhead Rolling Door Unit															
			FIO															
			Overhead Rolling Door Unit															
			FIO															
			Operation Manual															
			FIO															
			Maintenance and Repair Manual															

SUBMITTAL REGISTER

CONTRACT NO.

TITLE AND LOCATION
Consolidated Lodging Facility, Phase III, Minneapolis, St Paul MN

CONTRACTOR

ACTIVITY NO	TRANSMITTAL NO	SPEC SECT	DESCRIPTION ITEM SUBMITTED	PARAGRAPH #	CLASSIFICATION	GOVT OR A/E REVWR	CONTRACTOR: SCHEDULE DATES			CONTRACTOR ACTION			APPROVING AUTHORITY					
							SUBMIT	APPROVAL NEEDED BY	MATERIAL NEEDED BY	ACTION CODE	DATE OF ACTION	DATE FWD TO APPR AUTH/ DATE RCD FROM CONTR	DATE FWD TO OTHER REVIEWER	DATE RCD FROM OTH REVIEWER	ACTION CODE	DATE OF ACTION	MAILED TO CONTR/ DATE RCD FRM APPR AUTH	REMARKS
(a)	(b)	(c)	(d)	(e)	(f)		(g)	(h)	(i)	(j)	(k)	(l)	(m)	(n)	(o)	(p)	(q)	(r)
		08520	SD-01 Preconstruction Submittals															
			Aluminum Windows															
			FIO															
			SD-04 Samples															
			Aluminum Windows															
			GA1															
			Insect Screens	2.3														
			SD-06 Test Reports															
			Aluminum Windows															
			FIO															
			SD-09 Manufacturer’s Field															
			Reports															
			Aluminum Windows															
			FIO															
			Aluminum Windows															
			FIO															
			Aluminum Windows															
			GA1															
		08700	SD-01 Preconstruction Submittals															
			Hardware and Accessories															
			FIO															
			SD-04 Samples															
			Hardware Devices															
			GA															
			SD-07 Certificates															
			Hardware Schedule															

SUBMITTAL REGISTER

CONTRACT NO.

TITLE AND LOCATION
Consolidated Lodging Facility, Phase III, Minneapolis, St Paul MN

CONTRACTOR

ACTIVITY NO	TRANSMITTAL NO	SPEC SECT	DESCRIPTION ITEM SUBMITTED	PARAGRAPH #	CLASSIFICATION	GOVT OR A/E REVWR	CONTRACTOR: SCHEDULE DATES			CONTRACTOR ACTION			APPROVING AUTHORITY					
							SUBMIT	APPROVAL NEEDED BY	MATERIAL NEEDED BY	ACTION CODE	DATE OF ACTION	DATE FWD TO APPR AUTH/ DATE RCD FROM CONTR	DATE FWD TO OTHER REVIEWER	DATE RCD FROM OTH REVIEWER	ACTION CODE	DATE OF ACTION	MAILED TO CONTR/ DATE RCD FRM APPR AUTH	REMARKS
(a)	(b)	(c)	(d)	(e)	(f)		(g)	(h)	(i)	(j)	(k)	(l)	(m)	(n)	(o)	(p)	(q)	(r)
		08700	GA1															
			Keying Schedule															
			GA															
			Hardware and Accessories															
			FIO															
		08810	SD-01 Preconstruction Submittals															
			Glass															
			FIO															
			SD-04 Samples															
			Glazing Materials and															
			Accessories															
			FIO															
			Glass															
			FIO															
			Glass															
			FIO															
			Gypsum Wallboard															
			FIO															
			Water-Resistant Gypsum Board	2.3.3														
			Steel Framing															
			Fire-Rated Gypsum Board	2.3.2														
			Cementitious Backer Units															
			Mock-Up;															
			GA.															
		09310	SD-01 Preconstruction Submittals															
			Tile	2.1														

SUBMITTAL REGISTER

CONTRACT NO.

TITLE AND LOCATION
Consolidated Lodging Facility, Phase III, Minneapolis, St Paul MN

CONTRACTOR

ACTIVITY NO	TRANSMITTAL NO	SPEC SECT	DESCRIPTION ITEM SUBMITTED	PARAGRAPH #	CLASSIFICATION	GOVT OR A/E REVWR	CONTRACTOR: SCHEDULE DATES			CONTRACTOR ACTION			APPROVING AUTHORITY					MAILED TO CONTR/ DATE RCD FRM APPR AUTH	REMARKS
							SUBMIT	APPROVAL NEEDED BY	MATERIAL NEEDED BY	ACTION CODE	DATE OF ACTION	DATE FWD TO APPR AUTH/ DATE RCD FROM CONTR	DATE FWD TO OTHER REVIEWER	DATE RCD FROM OTH REVIEWER	ACTION CODE	DATE OF ACTION			
(a)	(b)	(c)	(d)	(e)	(f)	(g)	(h)	(i)	(j)	(k)	(l)	(m)	(n)	(o)	(p)	(q)	(r)		
		09310	FIO																
			Setting-Bed																
			Mortar, Grout, and Adhesive	2.4															
			Tile	2.1															
			GA1																
			Accessories																
		09510	SD-01 Preconstruction Submittals																
			Acoustical Ceiling System																
			FIO.																
			Spray Applied Acoustical																
			Treament																
			FIO																
			Acoustical Units	2.1															
			FIO																
			Spray Applied Acoustical																
			Treament																
		09650	SD-01 Preconstruction Submittals																
			Resilient Flooring and																
			Accessories																
			FIO																
			SD-09 Manufacturer's Field																
			Reports																
			Resilient Flooring and																
			Accessories																
			FIO																

SUBMITTAL REGISTER

CONTRACT NO.

TITLE AND LOCATION
Consolidated Lodging Facility, Phase III, Minneapolis, St Paul MN

CONTRACTOR

ACTIVITY NO	TRANSMITTAL NO	SPEC SECT	DESCRIPTION ITEM SUBMITTED	PARAGRAPH #	CLASSIFICATION	GOVT OR A/E REVWR	CONTRACTOR: SCHEDULE DATES			CONTRACTOR ACTION			APPROVING AUTHORITY					REMARKS
							SUBMIT	APPROVAL NEEDED BY	MATERIAL NEEDED BY	ACTION CODE	DATE OF ACTION	DATE FWD TO APPR AUTH/ DATE RCD FROM CONTR	DATE FWD TO OTHER REVIEWER	DATE RCD FROM OTH REVIEWER	ACTION CODE	DATE OF ACTION	MAILED TO CONTR/ DATE RCD FRM APPR AUTH	
(a)	(b)	(c)	(d)	(e)	(f)		(g)	(h)	(i)	(j)	(k)	(l)	(m)	(n)	(o)	(p)	(q)	(r)
		09650	Resilient Flooring and															
			Accessories															
			GAI															
		09680	SD-01 Preconstruction Submittals															
			Carpet and Accessories															
			FIO															
			SD-04 Samples															
			Installation	3.4														
			GA1															
			SD-06 Test Reports															
			Carpet and Accessories															
			FIO															
			Carpet and Accessories															
			Carpet and Accessories															
			FIO															
		09900	SD-01 Preconstruction Submittals															
			Paint	2.1														
			FIO															
			SD-06 Test Reports															
			Application	3.4														
			FIO															
			Paint	2.1														
			GA1															
		10214	SD-01 Preconstruction Submittals															
			Louvers															
			FIO															

SUBMITTAL REGISTER

CONTRACT NO.

TITLE AND LOCATION
Consolidated Lodging Facility, Phase III, Minneapolis, St Paul MN

CONTRACTOR

ACTIVITY NO	TRANSMITTAL NO	SPEC SECT	DESCRIPTION ITEM SUBMITTED	PARAGRAPH #	CLASSIFICATION	GOVT OR A/E REVWR	CONTRACTOR: SCHEDULE DATES			CONTRACTOR ACTION			APPROVING AUTHORITY					
							SUBMIT	APPROVAL NEEDED BY	MATERIAL NEEDED BY	ACTION CODE	DATE OF ACTION	DATE FWD TO APPR AUTH/ DATE RCD FROM CONTR	DATE FWD TO OTHER REVIEWER	DATE RCD FROM OTH REVIEWER	ACTION CODE	DATE OF ACTION	MAILED TO CONTR/ DATE RCD FRM APPR AUTH	REMARKS
(a)	(b)	(c)	(d)	(e)	(f)		(g)	(h)	(i)	(j)	(k)	(l)	(m)	(n)	(o)	(p)	(q)	(r)
		10214	SD-04 Samples															
			Louvers															
			GA1															
		10260	SD-01 Preconstruction Submittals															
			Corner Guards	2.2														
			FIO															
			Finish	2.7														
			FIO															
		10440	SD-01 Preconstruction Submittals															
			Interior Signage															
			GA1															
			SD-04 Samples															
			Interior Signage															
			GA1															
			Interior Signage															
			GA1															
		10522	SD-01 Preconstruction Submittals															
			Fire Extinguisher Cabinets															
		10800	SD-01 Preconstruction Submittals															
			Accessory Items	2.2														
			GA1															
		12490	SD-01 Preconstruction Submittals															
			Window Treatments and															
			Hardware															
			FIO															
			SD-04 Samples															

SUBMITTAL REGISTER

CONTRACT NO.

TITLE AND LOCATION
Consolidated Lodging Facility, Phase III, Minneapolis, St Paul MN

CONTRACTOR

ACTIVITY NO	TRANSMITTAL NO	SPEC SECT	DESCRIPTION ITEM SUBMITTED	PARAGRAPH #	CLASSIFICATION	GOVT OR A/E REVWR	CONTRACTOR: SCHEDULE DATES			CONTRACTOR ACTION			APPROVING AUTHORITY					
							SUBMIT	APPROVAL NEEDED BY	MATERIAL NEEDED BY	ACTION CODE	DATE OF ACTION	DATE FWD TO APPR AUTH/ DATE RCD FROM CONTR	DATE FWD TO OTHER REVIEWER	DATE RCD FROM OTH REVIEWER	ACTION CODE	DATE OF ACTION	MAILED TO CONTR/ DATE RCD FRM APPR AUTH	REMARKS
(a)	(b)	(c)	(d)	(e)	(f)		(g)	(h)	(i)	(j)	(k)	(l)	(m)	(n)	(o)	(p)	(q)	(r)
		12490	Window Treatments and															
			Hardware															
			FIO															
			Window Treatments and															
			Hardware															
			GA1															
		13851	SD-01 Preconstruction Submittals															
			Storage Batteries	2.2														
			Voltage Drop															
			Spare Parts															
			]															
			Technical Data and Computer	1.4														
			Software															
			GA															
			SD-04 Samples															
			Fire Alarm Reporting System															
			GA1															
			SD-06 Test Reports															
			Training	3.6														
			SD-08 Manufacturer’s Instructions															
			Testing	3.5														
			SD-09 Manufacturer’s Field															
			Reports															
			Testing	3.5														
			Equipment															
			GA															

SUBMITTAL REGISTER

CONTRACT NO.

TITLE AND LOCATION
Consolidated Lodging Facility, Phase III, Minneapolis, St Paul MN

CONTRACTOR

ACTIVITY NO	TRANSMITTAL NO	SPEC SECT	DESCRIPTION ITEM SUBMITTED	PARAGRAPH #	CLASSIFICATION	GOVT OR A/E REVWR	CONTRACTOR: SCHEDULE DATES			CONTRACTOR ACTION			APPROVING AUTHORITY					
							SUBMIT	APPROVAL NEEDED BY	MATERIAL NEEDED BY	ACTION CODE	DATE OF ACTION	DATE FWD TO APPR AUTH/ DATE RCD FROM CONTR	DATE FWD TO OTHER REVIEWER	DATE RCD FROM OTH REVIEWER	ACTION CODE	DATE OF ACTION	MAILED TO CONTR/ DATE RCD FRM APPR AUTH	REMARKS
(a)	(b)	(c)	(d)	(e)	(f)		(g)	(h)	(i)	(j)	(k)	(l)	(m)	(n)	(o)	(p)	(q)	(r)
		13851	Qualifications	1.2.7														
			Technical Data and Computer	1.4														
			Software															
			GA															
		13930	SD-01 Preconstruction Submittals															
			Load Calculations for Sizing Sway															
			Bracing															
			Sprinkler System Equipment															
			GA1															
			Hydraulic Calculations	1.4														
			Spare Parts															
			FIO															
			SD-04 Samples															
			Sprinkler System Shop Drawings															
			GA1															
			As-Built Drawings															
			FIO															
			SD-06 Test Reports															
			Test Procedures															
			FIO															
			SD-07 Certificates															
			Preliminary Tests															
			FIO															
			Final Test															
			GA															
			SD-08 Manufacturer's Instructions															

SUBMITTAL REGISTER

CONTRACT NO.

TITLE AND LOCATION
Consolidated Lodging Facility, Phase III, Minneapolis, St Paul MN

CONTRACTOR

ACTIVITY NO	TRANSMITTAL NO	SPEC SECT	DESCRIPTION ITEM SUBMITTED	PARAGRAPH #	CLASSIFICATION	GOVT OR A/E REVWR	CONTRACTOR: SCHEDULE DATES			CONTRACTOR ACTION			APPROVING AUTHORITY					
							SUBMIT	APPROVAL NEEDED BY	MATERIAL NEEDED BY	ACTION CODE	DATE OF ACTION	DATE FWD TO APPR AUTH/ DATE RCD FROM CONTR	DATE FWD TO OTHER REVIEWER	DATE RCD FROM OTH REVIEWER	ACTION CODE	DATE OF ACTION	MAILED TO CONTR/ DATE RCD FRM APPR AUTH	REMARKS
(a)	(b)	(c)	(d)	(e)	(f)		(g)	(h)	(i)	(j)	(k)	(l)	(m)	(n)	(o)	(p)	(q)	(r)
		13930	Installer Qualifications	1.6														
			FIO															
			Submittal Preparer's	1.5														
			Qualifications															
			Contractor's Material & Test															
			Certificates															
			FIO															
			Sprinkler System															
			FIO															
		14240	SD-01 Preconstruction Submittals															
			Elevator System															
			FIO															
			SD-04 Samples															
			Elevator System															
			GA1															
			SD-06 Test Reports															
			Framed Instructions	3.7														
			FIO															
			SD-08 Manufacturer’s Instructions															
			Qualification Certificates															
			FIO															
			SD-09 Manufacturer’s Field															
			Reports															
			Testing	3.6														
			FIO															
			Finishes															

SUBMITTAL REGISTER

CONTRACT NO.

TITLE AND LOCATION
Consolidated Lodging Facility, Phase III, Minneapolis, St Paul MN

CONTRACTOR

ACTIVITY NO	TRANSMITTAL NO	SPEC SECT	DESCRIPTION ITEM SUBMITTED	PARAGRAPH #	CLASSIFICATION	GOVT OR A/E REVWR	CONTRACTOR: SCHEDULE DATES			CONTRACTOR ACTION			APPROVING AUTHORITY					
							SUBMIT	APPROVAL NEEDED BY	MATERIAL NEEDED BY	ACTION CODE	DATE OF ACTION	DATE FWD TO APPR AUTH/ DATE RCD FROM CONTR	DATE FWD TO OTHER REVIEWER	DATE RCD FROM OTH REVIEWER	ACTION CODE	DATE OF ACTION	MAILED TO CONTR/ DATE RCD FRM APPR AUTH	REMARKS
(a)	(b)	(c)	(d)	(e)	(f)		(g)	(h)	(i)	(j)	(k)	(l)	(m)	(n)	(o)	(p)	(q)	(r)
		14240	GA1															
			Test Procedures															
			GA															
			Elevator System															
			GA															
		15400	SD-01 Preconstruction Submittals															
			Welding															
			SD-04 Samples															
			Plumbing System															
			Electrical Schematics															
			SD-06 Test Reports															
			Plumbing System															
			SD-09 Manufacturer's Field															
			Reports															
			Tests, Flushing and Disinfection	3.9														
			Backflow Prevention Assembly															
			Tests															
			GA1															
			Materials and Equipment															
			Bolts															
			Plumbing System															
		15450	SD-01 Preconstruction Submittals															
			Manufacturers shop drawings															
			GA-1															
		15455	SD-01 Preconstruction Submittals															
			Manufacturers shop drawings															

SUBMITTAL REGISTER

CONTRACT NO.

TITLE AND LOCATION
Consolidated Lodging Facility, Phase III, Minneapolis, St Paul MN

CONTRACTOR

ACTIVITY NO	TRANSMITTAL NO	SPEC SECT	DESCRIPTION ITEM SUBMITTED	PARAGRAPH #	CLASSIFICATION	GOVT OR A/E REVWR	CONTRACTOR: SCHEDULE DATES			CONTRACTOR ACTION			APPROVING AUTHORITY					
							SUBMIT	APPROVAL NEEDED BY	MATERIAL NEEDED BY	ACTION CODE	DATE OF ACTION	DATE FWD TO APPR AUTH/ DATE RCD FROM CONTR	DATE FWD TO OTHER REVIEWER	DATE RCD FROM OTH REVIEWER	ACTION CODE	DATE OF ACTION	MAILED TO CONTR/ DATE RCD FRM APPR AUTH	REMARKS
(a)	(b)	(c)	(d)	(e)	(f)		(g)	(h)	(i)	(j)	(k)	(l)	(m)	(n)	(o)	(p)	(q)	(r)
		15455	GA-1															
		15653	SD-01 Preconstruction Submittals															
			Air-Conditioning System															
			FIO															
			Spare Parts Data															
			GA1															
			SD-06 Test Reports															
			Framed Instructions	3.1.20														
			FIO															
			SD-07 Certificates															
			Tests	3.2														
			FIO															
			Demonstrations	3.5														
			GA1															
			SD-08 Manufacturer's Instructions															
			Qualifications															
			FIO															
			Verification of Dimensions	1.5.1														
			SD-09 Manufacturer's Field															
			Reports															
			Tests	3.2														
			GA															
			System Performance Tests	3.2.6														
			GA1															
			Inspections	3.3														
			FIO															

SUBMITTAL REGISTER

CONTRACT NO.

TITLE AND LOCATION
Consolidated Lodging Facility, Phase III, Minneapolis, St Paul MN

CONTRACTOR

ACTIVITY NO	TRANSMITTAL NO	SPEC SECT	DESCRIPTION ITEM SUBMITTED	PARAGRAPH #	CLASSIFICATION	GOVT OR A/E REVWR	CONTRACTOR: SCHEDULE DATES			CONTRACTOR ACTION			APPROVING AUTHORITY					
							SUBMIT	APPROVAL NEEDED BY	MATERIAL NEEDED BY	ACTION CODE	DATE OF ACTION	DATE FWD TO APPR AUTH/ DATE RCD FROM CONTR	DATE FWD TO OTHER REVIEWER	DATE RCD FROM OTH REVIEWER	ACTION CODE	DATE OF ACTION	MAILED TO CONTR/ DATE RCD FRM APPR AUTH	REMARKS
(a)	(b)	(c)	(d)	(e)	(f)	(g)	(h)	(i)	(j)	(k)	(l)	(m)	(n)	(o)	(p)	(q)	(r)
		15653	Air-Conditioning System														
			GA1														
			Service Organizations														
			FIO														
			Operation Manual														
			FIO														
			Maintenance Manual														
		15895	SD-01 Preconstruction Submittals														
			Components and Equipment Data														
			GA1														
			SD-06 Test Reports														
			Test Procedures														
			FIO														
			Welding Procedures														
			System Diagrams														
			GA1														
			SD-07 Certificates														
			Test Schedules														
			FIO														
			Field Training Schedule														
			SD-08 Manufacturer’s Instructions														
			Similar Services														
			FIO														
			SD-09 Manufacturer’s Field														
			Reports														
			Test Reports														

SUBMITTAL REGISTER

CONTRACT NO.

TITLE AND LOCATION
Consolidated Lodging Facility, Phase III, Minneapolis, St Paul MN

CONTRACTOR

ACTIVITY NO	TRANSMITTAL NO	SPEC SECT	DESCRIPTION ITEM SUBMITTED	PARAGRAPH #	CLASSIFICATION	GOVT OR A/E REVWR	CONTRACTOR: SCHEDULE DATES			CONTRACTOR ACTION			APPROVING AUTHORITY					
							SUBMIT	APPROVAL NEEDED BY	MATERIAL NEEDED BY	ACTION CODE	DATE OF ACTION	DATE FWD TO APPR AUTH/ DATE RCD FROM CONTR	DATE FWD TO OTHER REVIEWER	DATE RCD FROM OTH REVIEWER	ACTION CODE	DATE OF ACTION	MAILED TO CONTR/ DATE RCD FRM APPR AUTH	REMARKS
(a)	(b)	(c)	(d)	(e)	(f)		(g)	(h)	(i)	(j)	(k)	(l)	(m)	(n)	(o)	(p)	(q)	(r)
		15895	FIO															
			Bolts															
			FIO															
			Air Supply, Distribution,															
			Ventilation, and Exhaust Manuals															
			FIO															
		15951	SD-01 Preconstruction Submittals															
			Equipment Compliance Booklet															
			GA1															
			SD-04 Samples															
			HVAC Control System															
			GA1															
			SD-08 Manufacturer’s Instructions															
			Commissioning Procedures															
			FIO															
			Performance Verification Test															
			Procedures															
			Training Course Materials															
			GA1															
			SD-09 Manufacturer’s Field															
			Reports															
			Commissioning Report															
			FIO															
			Performance Verification Test															
			Report															
			Service Organizations															

SUBMITTAL REGISTER

CONTRACT NO.

TITLE AND LOCATION
Consolidated Lodging Facility, Phase III, Minneapolis, St Paul MN

CONTRACTOR

ACTIVITY NO	TRANSMITTAL NO	SPEC SECT	DESCRIPTION ITEM SUBMITTED	PARAGRAPH #	CLASSIFICATION	GOVT OR A/E REVWR	CONTRACTOR: SCHEDULE DATES			CONTRACTOR ACTION			APPROVING AUTHORITY					
							SUBMIT	APPROVAL NEEDED BY	MATERIAL NEEDED BY	ACTION CODE	DATE OF ACTION	DATE FWD TO APPR AUTH/ DATE RCD FROM CONTR	DATE FWD TO OTHER REVIEWER	DATE RCD FROM OTH REVIEWER	ACTION CODE	DATE OF ACTION	MAILED TO CONTR/ DATE RCD FRM APPR AUTH	REMARKS
(a)	(b)	(c)	(d)	(e)	(f)		(g)	(h)	(i)	(j)	(k)	(l)	(m)	(n)	(o)	(p)	(q)	(r)
		15951	FIO															
			Operation Manual															
			GA1															
			Maintenance and Repair Manual															
		15990	SD-01 Preconstruction Submittals															
			TAB Related HVAC Submittals															
			FIO															
			SD-04 Samples															
			TAB Schematic Drawings and															
			Report Forms															
			GA1															
			SD-06 Test Reports															
			TAB Procedures															
			GA1															
			SD-07 Certificates															
			Systems Readiness Check															
			FIO															
			TAB Execution															
			GA1															
			TAB Verification															
			SD-08 Manufacturer's Instructions															
			TAB Firm															
			GA1															
			TAB Specialist															
			Instrument Calibration															
			FIO															

SUBMITTAL REGISTER

CONTRACT NO.

TITLE AND LOCATION
Consolidated Lodging Facility, Phase III, Minneapolis, St Paul MN

CONTRACTOR

ACTIVITY NO	TRANSMITTAL NO	SPEC SECT	DESCRIPTION ITEM SUBMITTED	PARAGRAPH #	CLASSIFICATION	GOVT OR A/E REVWR	CONTRACTOR: SCHEDULE DATES			CONTRACTOR ACTION			APPROVING AUTHORITY					
							SUBMIT	APPROVAL NEEDED BY	MATERIAL NEEDED BY	ACTION CODE	DATE OF ACTION	DATE FWD TO APPR AUTH/ DATE RCD FROM CONTR	DATE FWD TO OTHER REVIEWER	DATE RCD FROM OTH REVIEWER	ACTION CODE	DATE OF ACTION	MAILED TO CONTR/ DATE RCD FRM APPR AUTH	REMARKS
(a)	(b)	(c)	(d)	(e)	(f)		(g)	(h)	(i)	(j)	(k)	(l)	(m)	(n)	(o)	(p)	(q)	(r)
		15990	SD-09 Manufacturer's Field															
			Reports															
			Design Review Report															
			GA1															
			Systems Readiness Check Report															
			TAB Report															
			TAB Verification Report															
			Ductwork Leak Testing															
			FIO															
		15995	SD-01 Preconstruction Submittals															
			Commissioning Team															
			FIO															
			SD-06 Test Reports															
			Test Procedures															
			FIO															
			SD-07 Certificates															
			Test Schedule															
			GA1															
			SD-09 Manufacturer's Field															
			Reports															
			Test Reports															
			GA1															
		16120	SD-01 Preconstruction Submittals															
			Installation Instructions	2.2														
			FIO															

SUBMITTAL REGISTER

CONTRACT NO.

TITLE AND LOCATION
Consolidated Lodging Facility, Phase III, Minneapolis, St Paul MN

CONTRACTOR

ACTIVITY NO	TRANSMITTAL NO	SPEC SECT	DESCRIPTION ITEM SUBMITTED	PARAGRAPH #	CLASSIFICATION	GOVT OR A/E REVWR	CONTRACTOR: SCHEDULE DATES			CONTRACTOR ACTION			APPROVING AUTHORITY					
							SUBMIT	APPROVAL NEEDED BY	MATERIAL NEEDED BY	ACTION CODE	DATE OF ACTION	DATE FWD TO APPR AUTH/ DATE RCD FROM CONTR	DATE FWD TO OTHER REVIEWER	DATE RCD FROM OTH REVIEWER	ACTION CODE	DATE OF ACTION	MAILED TO CONTR/ DATE RCD FRM APPR AUTH	REMARKS
(a)	(b)	(c)	(d)	(e)	(f)		(g)	(h)	(i)	(j)	(k)	(l)	(m)	(n)	(o)	(p)	(q)	(r)
		16120	SD-09 Manufacturer's Field															
			Reports															
			Tests, Inspections, and	2.3														
			Verifications															
			FIO															
		16375	SD-01 Preconstruction Submittals															
			Fault Current and Protective															
			Devices Coordination Studies															
			GA															
			Manufacturer's Catalog Data															
			GA1															
			Material, Equipment, and Fixture															
			Lists															
			Installation Procedures															
			FIO															
			SD-04 Samples															
			Electrical Distribution System															
			GA1															
			As-Built Drawings															
			SD-09 Manufacturer's Field															
			Reports															
			Factory Test															
			FIO															
			Field Testing															
			GA															
			Test Reports															

SUBMITTAL REGISTER

CONTRACT NO.

TITLE AND LOCATION
Consolidated Lodging Facility, Phase III, Minneapolis, St Paul MN

CONTRACTOR

ACTIVITY NO	TRANSMITTAL NO	SPEC SECT	DESCRIPTION ITEM SUBMITTED	PARAGRAPH #	CLASSIFICATION	GOVT OR A/E REVWR	CONTRACTOR: SCHEDULE DATES			CONTRACTOR ACTION			APPROVING AUTHORITY					
							SUBMIT	APPROVAL NEEDED BY	MATERIAL NEEDED BY	ACTION CODE	DATE OF ACTION	DATE FWD TO APPR AUTH/ DATE RCD FROM CONTR	DATE FWD TO OTHER REVIEWER	DATE RCD FROM OTH REVIEWER	ACTION CODE	DATE OF ACTION	MAILED TO CONTR/ DATE RCD FRM APPR AUTH	REMARKS
(a)	(b)	(c)	(d)	(e)	(f)		(g)	(h)	(i)	(j)	(k)	(l)	(m)	(n)	(o)	(p)	(q)	(r)
		16375	Materials and Equipment															
			Cable Splicer Qualification															
			Cable Installer Qualifications															
			Electrical Distribution System															
			GA															
		16403	SD-01 Preconstruction Submittals															
			Equipment															
			GA															
			SD-04 Samples															
			Outline Drawings															
			GA															
			Switchboards	2.7														
			GA1															
			Panelboards	2.8														
			SD-08 Manufacturer’s Instructions															
			Factory Tests	2.10														
			FIO															
			SD-09 Manufacturer’s Field															
			Reports															
			Factory Tests	2.10														
			FIO															
		16415	SD-01 Preconstruction Submittals															
			Fault Current and Protective															
			Device Coordination Study															
			GA															
			Manufacturer's Catalog															

SUBMITTAL REGISTER

CONTRACT NO.

TITLE AND LOCATION
Consolidated Lodging Facility, Phase III, Minneapolis, St Paul MN

CONTRACTOR

ACTIVITY NO	TRANSMITTAL NO	SPEC SECT	DESCRIPTION ITEM SUBMITTED	PARAGRAPH #	CLASSIFICATION	GOVT OR A/E REVWR	CONTRACTOR: SCHEDULE DATES			CONTRACTOR ACTION			APPROVING AUTHORITY					
							SUBMIT	APPROVAL NEEDED BY	MATERIAL NEEDED BY	ACTION CODE	DATE OF ACTION	DATE FWD TO APPR AUTH/ DATE RCD FROM CONTR	DATE FWD TO OTHER REVIEWER	DATE RCD FROM OTH REVIEWER	ACTION CODE	DATE OF ACTION	MAILED TO CONTR/ DATE RCD FRM APPR AUTH	REMARKS
(a)	(b)	(c)	(d)	(e)	(f)		(g)	(h)	(i)	(j)	(k)	(l)	(m)	(n)	(o)	(p)	(q)	(r)
		16415	Material, Equipment, and Fixture															
			Lists															
			GA1															
			Installation Procedures															
			FIO															
			SD-04 Samples															
			Interior Electrical Equipment															
			GA1															
			As-Built Drawings															
			GA															
			SD-08 Manufacturer’s Instructions															
			Onsite Test															
			GA															
			SD-09 Manufacturer’s Field															
			Reports															
			Factory Test Reports															
			GA															
			Field Test Plan															
			Field Test Reports															
			Materials and Equipment															
			FIO															
		16485	SD-01 Preconstruction Submittals															
			Maunfactures Shop Drawings															
			'GA'															
		16528	SD-01 Preconstruction Submittals															
			Equipment and Materials															

SUBMITTAL REGISTER

CONTRACT NO.

TITLE AND LOCATION
Consolidated Lodging Facility, Phase III, Minneapolis, St Paul MN

CONTRACTOR

ACTIVITY NO	TRANSMITTAL NO	SPEC SECT	DESCRIPTION ITEM SUBMITTED	PARAGRAPH #	CLASSIFICATION	GOVT OR A/E REVWR	CONTRACTOR: SCHEDULE DATES			CONTRACTOR ACTION			APPROVING AUTHORITY					
							SUBMIT	APPROVAL NEEDED BY	MATERIAL NEEDED BY	ACTION CODE	DATE OF ACTION	DATE FWD TO APPR AUTH/ DATE RCD FROM CONTR	DATE FWD TO OTHER REVIEWER	DATE RCD FROM OTH REVIEWER	ACTION CODE	DATE OF ACTION	MAILED TO CONTR/ DATE RCD FRM APPR AUTH	REMARKS
(a)	(b)	(c)	(d)	(e)	(f)		(g)	(h)	(i)	(j)	(k)	(l)	(m)	(n)	(o)	(p)	(q)	(r)
		16528	GA															
			Spare Parts															
			FIO															
			SD-04 Samples															
			Lighting System															
			GA1															
			As-Built Drawings															
			Operating Test															
			GA															
			Ground Resistance															
			Measurements															
			Lighting System															
			GA															
		16536	SD-01 Preconstruction Submittals															
			Manufactures Shop Drawings															
			'GA1'															
			SD-02 Shop Drawings															
			Installation manuals															
			'FIO'															
			User ManualsSD-															
			'FIO'															
		16710	SD-01 Preconstruction Submittals															
			Spare Parts															
			FIO															
			SD-04 Samples															
			Premises Distribution System															

SUBMITTAL REGISTER

CONTRACT NO.

TITLE AND LOCATION
Consolidated Lodging Facility, Phase III, Minneapolis, St Paul MN

CONTRACTOR

ACTIVITY NO	TRANSMITTAL NO	SPEC SECT	DESCRIPTION ITEM SUBMITTED	PARAGRAPH #	CLASSIFICATION	GOVT OR A/E REVWR	CONTRACTOR: SCHEDULE DATES			CONTRACTOR ACTION			APPROVING AUTHORITY					
							SUBMIT	APPROVAL NEEDED BY	MATERIAL NEEDED BY	ACTION CODE	DATE OF ACTION	DATE FWD TO APPR AUTH/ DATE RCD FROM CONTR	DATE FWD TO OTHER REVIEWER	DATE RCD FROM OTH REVIEWER	ACTION CODE	DATE OF ACTION	MAILED TO CONTR/ DATE RCD FRM APPR AUTH	REMARKS
(a)	(b)	(c)	(d)	(e)	(f)	(g)	(h)	(i)	(j)	(k)	(l)	(m)	(n)	(o)	(p)	(q)	(r)
		16710	GA														
			Record Drawings														
			SD-06 Test Reports														
			Manufacturer's Recommendations														
			GA														
			SD-08 Manufacturer’s Instructions														
			Test Plan														
			GA														
			Qualifications	1.4													
			SD-09 Manufacturer’s Field														
			Reports														
			Test Reports														
			FIO														
			Premises Distribution System														
			FIO														
			Materials and Equipment	2.1													
			Installers														
			GA														
			Record Keeping and	1.8													
			Documentation														
			GA														
		16711	SD-01 Preconstruction Submittals														
			Spare Parts and Equipment List														
			FIO														
			SD-04 Samples														
			Telephone System														

SUBMITTAL REGISTER

CONTRACT NO.

TITLE AND LOCATION
Consolidated Lodging Facility, Phase III, Minneapolis, St Paul MN

CONTRACTOR

ACTIVITY NO	TRANSMITTAL NO	SPEC SECT	DESCRIPTION ITEM SUBMITTED	PARAGRAPH #	CLASSIFICATION	GOVT OR A/E REVWR	CONTRACTOR: SCHEDULE DATES			CONTRACTOR ACTION			APPROVING AUTHORITY					
							SUBMIT	APPROVAL NEEDED BY	MATERIAL NEEDED BY	ACTION CODE	DATE OF ACTION	DATE FWD TO APPR AUTH/ DATE RCD FROM CONTR	DATE FWD TO OTHER REVIEWER	DATE RCD FROM OTH REVIEWER	ACTION CODE	DATE OF ACTION	MAILED TO CONTR/ DATE RCD FRM APPR AUTH	REMARKS
(a)	(b)	(c)	(d)	(e)	(f)		(g)	(h)	(i)	(j)	(k)	(l)	(m)	(n)	(o)	(p)	(q)	(r)
		16711	GA1															
			Record Drawings															
			GA															
			SD-06 Test Reports															
			Installation	3.1														
			GA															
			SD-08 Manufacturer’s Instructions															
			Acceptance Tests	3.5														
			GA															
			Cutover and Records	3.4														
			SD-09 Manufacturer’s Field															
			Reports															
			Acceptance Tests	3.5														
			FIO															
			Telephone System															
			FIO															
			Qualifications	1.3														
			GA															

TRANSMITTAL OF SHOP DRAWINGS, EQUIPMENT DATA, MATERIAL SAMPLES, OR MANUFACTURER'S CERTIFICATES OF COMPLIANCE *(Read instructions on the reverse side prior to initiating this form)*	DATE	TRANSMITTAL NO.

SECTION I - REQUEST FOR APPROVAL OF THE FOLLOWING ITEMS *(This section will be initiated by the contractor)*

TO:	FROM:	CONTRACT NO.	CHECK ONE: ☐ THIS IS A NEW TRANSMITTAL ☐ THIS IS A RESUBMITTAL OF TRANSMITTAL _____
SPECIFICATION SEC. NO. *(Cover only one section with each transmittal)*	PROJECT TITLE AND LOCATION		CHECK ONE: THIS TRANSMITTAL IS FOR ☐ FIO ☐ GOV'T. APPROVAL

ITEM NO. *a.*	DESCRIPTION OF ITEM SUBMITTED *(Type size, model number/etc.)* *b.*	MFG OR CONTR. CAT., CURVE DRAWING OR BROCHURE NO. *(See instruction no. 8)* *c.*	NO. OF COPIES *d.*	CONTRACT REFERENCE DOCUMENT		FOR CONTRACTOR USE CODE *g.*	VARIATION *(See instruction No. 6)* *h.*	FOR CE USE CODE *i.*
				SPEC. PARA. NO. *e.*	DRAWING SHEET NO. *f.*			

REMARKS

I certify that the above submitted items have been reviewed in detail and are correct and in strict conformance with the contract drawings and specifications except as other wise stated.

_____

NAME AND SIGNATURE OF CONTRACTOR

SECTION II - APPROVAL ACTION

ENCLOSURES RETURNED *(List by Item No.)*	NAME, TITLE AND SIGNATURE OF APPROVING AUTHORITY	DATE

INSTRUCTIONS

1. Section I will be initiated by the Contractor in the required number of copies.

2. Each transmittal shall be numbered consecutively in the space provided for "Transmittal No.". This number, in addition to the contract number, will form a serial number for identifying each submittal. For new submittals or resubmittals mark the appropriate box; on resubmittals, insert transmittal number of last submission as well as the new submittal number.

3. The "Item No." will be the same "Item No." as indicated on ENG FORM 4288-R for each entry on this form.

4. Submittals requiring expeditious handling will be submitted on a separate form.

5. Separate transmittal form will be used for submittals under separate sections of the specifications.

6. A check shall be placed in the "Variation" column when a submittal is not in accordance with the plans and specifications--also, a written statement to that effect shall be included in the space provided for "Remarks".

7. Form is self-transmittal, letter of transmittal is not required.

8. When a sample of material or Manufacturer's Certificate of Compliance is transmitted, indicate "Sample" or "Certificate" in column c, Section I.

9. U.S. Army Corps of Engineers approving authority will assign action codes as indicated below in space provided in Section I, column i to each item submitted. In addition they will ensure enclosures are indicated and attached to the form prior to return to the contractor. The Contractor will assign action codes as indicated below in Section I, column g, to each item submitted.

THE FOLLOWING ACTION CODES ARE GIVEN TO ITEMS SUBMITTED

A	--	Approved as submitted.	E	--	Disapproved (See attached).
B	--	Approved, except as noted on drawings.	F	--	Receipt acknowledged.
C	--	Approved, except as noted on drawings. Refer to attached sheet resubmission required.	FX	--	Receipt acknowledged, does not comply as noted with contract requirements.
D	--	Will be returned by separate correspondence.	G	--	Other (*Specify)*

10. Approval of items does not relieve the contractor from complying with all the requirements of the contact plans and specifications.

(Reverse of ENG Form 4025-R)

SECTION TABLE OF CONTENTS

DIVISION 01 - GENERAL REQUIREMENTS

SECTION 01400

SPECIAL SAFETY REQUIREMENTS

05/00 Rev 12/01

PART 1 GENERAL

1.1 REFERENCES
1.2 SUMMARY
1.2.1 General
1.3 PRECONSTRUCTION CONFERENCE
1.4 SUBMITTALS
1.5 ACCIDENT PREVENTION PLAN
1.5.1 Requirements
1.5.1.1 Responsible Individual(s)
1.5.1.2 Subcontractor Supervision
1.5.1.3 Indoctrination of New Employees
1.5.1.4 Tool Box Safety Meetings
1.5.1.5 Fire Prevention and Protection
1.5.1.6 Housekeeping
1.5.1.7 Mechanical Equipment Inspection
1.5.1.8 First Aid and Medical Facilities
1.5.1.9 Sanitation
1.5.1.10 Safety Promotions
1.5.1.11 Accident Reporting
1.5.1.12 Job Hazard Analysis
1.6 EXCAVATION AND TRENCHING

PART 2 PRODUCTS (NOT APPLICABLE)

PART 3 EXECUTION (NOT APPLICABLE)

-- End of Section Table of Contents --

SECTION 01400

SPECIAL SAFETY REQUIREMENTS
05/00 Rev 12/01

PART 1 GENERAL

1.1 REFERENCES

The publications listed below form a part of this specification to the extent referenced. The publications are referred to in the text by basic designation only.

CODE OF FEDERAL REGULATIONS (CFR)

29 CFR 1926	Safety and Health Regulations for Construction

ENGINEERING MANUALS (EM)

EM 385-1-1	(1996 and Changes) Safety and Health Requirements Manual

1.2 SUMMARY

1.2.1 General

This section provides guidelines for preparation of accident prevention plans, and to implement the accident prevention clause (this specification) and EM 385-1-1, Safety and Health Requirements Manual. The U.S. Army Corps of Engineers Safety and Health Requirements Manual, EM 385-1-1 is available from U.S. Government bookstores operated by the Government Printing Office and a copy is included on the CD-ROM issued with this solicitation. Changes to EM 385-1-1 applicable to this contract include only those revisions posted at the following website (all revisions up to the time this solicitation is issued): http://www.hq.usace.army.mil/soh/hqusace_soh.htm ("Changes to EM"). U.S. Government bookstores are located in most major cities including Milwaukee, Chicago, Kansas City, Denver, and Pueblo, Colorado.

1.3 PRECONSTRUCTION CONFERENCE

See Contract Clause "PRECONSTRUCTION CONFERENCE". A preconstruction conference will be scheduled prior to beginning of site work. Requirements relative to planning and administration of the overall safety program will be discussed.

1.4 SUBMITTALS

Government approval is required for submittals with a "G" designation; submittals not having a "G" designation are for information only. When used, a designation following the "G" designation identifies the office that will review the submittal for the Government. The following shall be submitted in accordance with Section 01330SUBMITTAL PROCEDURES:

SD-01 Preconstruction Submittals

Accident Prevention Plan; G-RE

The written site-specific Accident Prevention Plan.

SD-07 Certificates

Qualifications; G-RE.

A written report providing evidence of qualifications for personnel, facilities and equipment assigned to the work. .

1.5 ACCIDENT PREVENTION PLAN

The Contractor shall submit, prior to the start of on site construction activity, a proposed accident prevention plan which shall be the accident prevention policy to be followed by all of the Contractor's and subcontractor's personnel and supervisory staff during performance of the work.

1.5.1 Requirements

The proposed plan shall be developed after a careful analysis of the work involved and shall be tailored specifically to the conditions of this project. The Contractor's accident prevention plan shall contain, as a minimum, the following general information or procedures for the activity indicated. The Contractor shall submit his plan for review and acceptance prior to commencing work.

1.5.1.1 Responsible Individual(s)

The Contractor shall designate an onsite employee as the individual responsible for insuring the accident prevention plan is implemented and enforced.

1.5.1.2 Subcontractor Supervision

Explain procedures to assure that subcontractor(s) fully comply with the accident prevention plan.

1.5.1.3 Indoctrination of New Employees

The plan shall include provisions for advising workers of the purpose of the accident prevention plan, specific hazards on the job and precautions to be taken, emergency procedures, information concerning tool box safety meetings, required protective equipment, cleanup rules and location of company safety rules (posting or handout).

1.5.1.4 Tool Box Safety Meetings

Hold weekly "Tool Box" safety meetings. Timely safety subjects shall be determined by a responsible individual. Employees will be informed of time, location, who will conduct, and subject. Identify procedures for including subcontractors. The Contractor shall provide a copy of the Weekly Tool Box Meeting and Monthly Supervisor's Safety Meeting to the Contracting Officer.

1.5.1.5 Fire Prevention and Protection

Identify source of fire protection. Insure adequate fire extinguishers, water barrels, or other fire-fighting equipment is located on site. Explain prevention activities to include storage areas and special hazards such as welding and use of flammable liquids, and other special hazards.

1.5.1.6 Housekeeping

Daily cleanup of all debris and waste materials is required. Adequate disposal containers should be placed strategically around the site. Debris shall be removed on a regular basis. Explain procedures that include use of barrels, dumpsters, trash chutes, etc.

1.5.1.7 Mechanical Equipment Inspection

All mechanical equipment (trucks, cranes, forklifts, backhoes, graders, etc.) shall be inspected prior to use and at fixed intervals throughout the life of the contract. Explain how inspections will be accomplished (frequency, by whom, and records to be kept).

1.5.1.8 First Aid and Medical Facilities

First aid facilities shall be made available on the job site. Arrangements for emergency medical attention shall be made prior to start of work. All emergency numbers (doctor, hospital, ambulance, fire department) shall be posted at the project superintendent's office.

1.5.1.9 Sanitation

Include provisions for toilet facilities, drinking water and washing facilities. A sufficient number of toilet facilities as specified in EM 385-1-1 shall be provided unless permission is granted to use existing facilities (portable chemical are authorized). Insure safe drinking water and individual cups are available. For the projects where corrosive or toxic materials are used, separate washing facilities are required.

1.5.1.10 Safety Promotions

The Contractor shall promote accident prevention. Identify method (posters, awards etc.).

1.5.1.11 Accident Reporting

All accidents (employee injuries, vehicle, building, or equipment damage etc.) regardless of their severity, shall be reported to the onsite government representative or to the area engineer, who in turn will advise the Contractor of forms to be submitted and timeframes.

1.5.1.12 Job Hazard Analysis

When job situations change and it is necessary to alter safety requirements, a Job Hazard Analysis will be accomplished, documented, and added as an addendum to the Accident Prevention Plan. Each Job Hazard Analysis shall include, but not be limited to, a description of the work, probable hazards related to that work and positive precautionary measures to be taken to reduce or eliminate each hazard. An example of changing situations may be new subcontractors performing work such as earth moving, trenching, concrete work, roofing, electrical, masonry etc. The onsite

government representative will determine the format and amount of detail required of the written plan.

1.6 EXCAVATION AND TRENCHING

The standards for excavation and trenching are outlined in 29 CFR 1926, Subpart P. These standards shall be followed in addition to those outlined in EM 385-1-1.

PART 2 PRODUCTS (NOT APPLICABLE)

PART 3 EXECUTION (NOT APPLICABLE)

-- End of Section --

SECTION TABLE OF CONTENTS

DIVISION 01 - GENERAL REQUIREMENTS

SECTION 01410

ENVIRONMENT PROTECTION

02/97

1.1 GENERAL REQUIREMENTS
1.1.1 Subcontractors
1.1.2 Environmental Protection Plan
1.1.3 Permits
1.1.3.1 Industrial Storm Water Permit
1.1.4 Preconstruction Survey
1.1.5 Meetings
1.1.6 Notification
1.1.7 Litigation
1.1.8 Previously Used Equipment
1.1.9 Payment
1.2 LAND RESOURCES
1.2.1 Work Area Limits
1.2.2 Landscape
1.2.3 Unprotected Erodible Soils
1.2.4 Disturbed Areas
1.2.5 Contractor Facilities and Work Areas
1.3 WATER RESOURCES
1.4 AIR RESOURCES
1.4.1 Particulates
1.4.2 Hydrocarbons and Carbon Monoxide
1.4.3 Odors
1.4.4 Sound Intrusions
1.5 WASTE DISPOSAL
1.5.1 Solid Wastes
1.5.2 Chemical Wastes
1.5.3 Hazardous Wastes
1.5.4 Burning
1.5.5 Construction Waste Water
1.6 HISTORICAL, ARCHAEOLOGICAL, AND CULTURAL RESOURCES
1.7 POST CONSTRUCTION CLEANUP
1.8 RESTORATION OF LANDSCAPE DAMAGE
1.9 MAINTENANCE OF POLLUTION FACILITIES
1.10 TRAINING OF CONTRACTOR PERSONNEL

-- End of Section Table of Contents --

SECTION 01410

ENVIRONMENT PROTECTION
02/97

1.1 GENERAL REQUIREMENTS

The Contractor shall perform the work minimizing environmental pollution and damage as the result of construction operations. Environmental pollution and damage is the presence of chemical, physical, or biological elements or agents which adversely affect human health or welfare; unfavorably alter ecological balances of importance to human life; affect other species of importance to humankind; or degrade the utility of the environment for aesthetic, cultural and/or historical purposes. The control of environmental pollution and damage requires consideration of land, water, and air, and includes management of visual aesthetics, noise, solid waste, as well as other pollutants. The environmental resources within the project boundaries and those affected outside the limits of permanent work shall be protected during the entire duration of this contract.

1.1.1 Subcontractors

The Contractor shall ensure compliance with this section by subcontractors.

1.1.2 Environmental Protection Plan

The Contractor shall submit an environmental protection plan within 15 days after receipt of the notice to proceed. Approval of the Contractor's plan will not relieve the Contractor of responsibility for adequate and continuing control of pollutants and other environmental protection measures. The environmental protection plan shall include, but shall not be limited to, the following:

a. A list of Federal, State, and local laws, regulations, and permits concerning environmental protection, pollution control and abatement that are applicable to the Contractor's proposed operations and the requirements imposed by those laws, regulations, and permits.

b. Methods for protection of features to be preserved within authorized work areas like trees, shrubs, grasses and ground cover, landscape features, air and water quality, soil, historical, archaeological, and cultural resources.

c. Procedures to be implemented to provide the required environmental protection, to comply with the applicable laws and regulations, and to correct pollution due to accident, natural causes, or failure to follow the procedures of the environmental protection plan.

d. Not Used.

e. Drawings showing locations of any proposed temporary excavations, material storage areas, structures, sanitary facilities, and stockpiles of excess or spoil materials.

f. Environmental monitoring plans for the job site, including land, water, air, and noise monitoring.

g. Traffic control plan including measures to reduce amount of mud transported onto paved public roads by vehicles or runoff.

h. Not Used.

i. Plan showing the proposed activity in each portion of the work area and identifying the areas of limited use or nonuse. Plan should include measures for marking the limits of use areas.

j. Drawing of borrow area location. Protection measures required at the work site shall apply to the borrow areas including final restoration for subsequent beneficial use of the land.

k. A recycling and waste prevention plan with a list of measures to reduce consumption of energy and natural resources; for example: the possibility to shred fallen trees and use them as mulch shall be considered as an alternative to burning or burial.

l. Not Used.

m. Training for Contractor's personnel during the construction period.

n. A Spill Control Plan that shall include the procedures, instructions d reports to be used in the event of an unforeseen spill of a substance regulated by the Emergency Response and Community Right-to-Know Act or regulated under State or local laws or regulations. The Spill Control Plan supplements the requirements of EM 385-1-1 and Minneapolis / St. Paul IAP-ARS Spill control Plan. This plan shall include as a minimum:

1. The name of the individual who will report any spills or hazardous substance releases and who will follow up with complete documentation. This individual shall immediately notify the CO in addition to the legally required Federal, State, and local reporting channels (including the National Response Center 1-800-424-8802) if a reportable quantity spill occurs. The plan shall contain a list of the required reporting channels and telephone numbers.

2. The name of the individual who will be responsible for implementing and supervising the containment and cleanup.

3. Training requirements for Contractor's personnel and methods of accomplishing the training.

4. A list of materials and equipment to be immediately available at the job site, tailored to cleanup work of the potential hazard(s) identified.

5. The names and locations of suppliers of containment materials and locations of additional fuel oil recovery, cleanup, restoration, and material-placement equipment available in case of an unforeseen spill emergency.

6. The methods and procedures to be used for expeditious

contaminant cleanup.

1.1.3 Permits

The Contractor shall obtain all needed permits or licenses. The Government will not obtain any permits for this project; see Contract Clause PERMITS AND RESPONSIBILITIES. The State Department of Natural Resources, through the national pollutant discharge elimination system (NPDES), requires general permits, a notice of intent, and a notice of discontinuation. The Contractor shall be responsible for implementing the terms and requirements of the appropriate permits as needed and for payment of all fees.

1.1.3.1 Industrial Storm Water Permit

The Air Reserve Base has a State of Minnesota Industrial Storm Water permit which applies to the all facilities and work performed on the Base. Contractor is to be in compliance with this permit. The Storm Water Pollution Prevention Plan (SWPPP), which is a requirement of the permit, identifies the Best Management Practices (BMP) that are to be used on the Facility. The permit and the SWPPP may be reviewed at the Environmental Office (CEV) on the Base.

1.1.4 Preconstruction Survey

Prior to starting any onsite construction activities, the Contractor and the Contracting Officer shall make a joint condition survey after which the Contractor shall prepare a brief report indicating on a layout plan the condition of trees, shrubs and grassed areas immediately adjacent to work sites and adjacent to the assigned storage area and access routes as applicable. This report will be signed by both the Contracting Officer and the Contractor upon mutual agreement as to its accuracy and completeness.

1.1.5 Meetings

The Contractor shall meet with representatives of the Contracting Officer to alter the environmental protection plan as needed for compliance with the environmental pollution control program.

1.1.6 Notification

The Contracting Officer will notify the Contractor in writing of any observed noncompliance with the previously mentioned Federal, State or local laws or regulations, permits, and other elements of the Contractor's environmental protection plan. The Contractor shall, after receipt of such notice, inform the Contracting Officer of proposed corrective action and take such action when approved. If the Contractor fails to comply promptly, the Contracting Officer may issue an order stopping all or part of the work until satisfactory corrective action has been taken. No time extensions shall be granted or costs or damages allowed to the Contractor for any such suspensions.

1.1.7 Litigation

If work is suspended, delayed, or interrupted due to a court order of competent jurisdiction, the Contracting Officer will determine whether the order is due in any part to the acts or omissions of the Contractor, or subcontractors at any tier, not required by the terms of the contract. If it is determined that the order is not due to Contractor's failing, such suspension, delay, or interruption shall be considered as ordered by the

Contracting Officer in the administration of the contract under the contract clause SUSPENSION OF WORK.

1.1.8 Previously Used Equipment

The Contractor shall thoroughly clean all construction equipment previously used at other sites before it is brought into the work areas, ensuring that soil residuals are removed and that egg deposits from plant pests are not present.

1.1.9 Payment

No separate payment will be made for work covered under this section; all costs associated with this section shall be included in the contract unit and/or lump sum prices in the Bidding Schedule.

1.2 LAND RESOURCES

The Contractor shall confine all activities to areas defined by the drawings and specifications. Prior to the beginning of any construction, the Contractor shall identify the land resources to be preserved within the work area. Except in areas indicated on the drawings or specified to be cleared, the Contractor shall not remove, cut, deface, injure, or destroy land resources including trees, shrubs, vines, grasses, topsoil, and land forms without permission. No ropes, cables, or guys shall be fastened to or attached to any trees for anchorage unless specifically authorized. Where such emergency use is permitted, the Contractor shall provide effective protection for land and vegetation resources at all times as defined in the following subparagraphs. Stone, earth or other material displaced into uncleared areas shall be removed.

1.2.1 Work Area Limits

Prior to any construction, the Contractor shall mark the areas that need not be disturbed under this contract. Isolated areas within the general work area which are to be saved and protected shall also be marked or fenced. Monuments and markers shall be protected before construction operations commence. Where construction operations are to be conducted during darkness, the markers shall be visible. The Contractor's personnel shall be knowledgeable of the purpose for marking and/or protecting particular objects.

1.2.2 Landscape

Trees and other landscape features indicated and defined on the drawings to be preserved shall be clearly identified by marking, fencing, or wrapping with boards, or any other approved techniques.

1.2.3 Unprotected Erodible Soils

Earthwork brought to final grade shall be finished as indicated. Side slopes and back slopes shall be protected as soon as practicable upon completion of rough grading. All earthwork shall be planned and conducted to minimize the duration of exposure of unprotected soils. Clearing of such areas shall progress in reasonably sized increments as needed to use the developed areas as approved by the Contracting Officer.

1.2.4 Disturbed Areas

The Contractor shall effectively prevent erosion and control sedimentation through approved methods including, but not limited to, the following:

a. Retardation and control of runoff. Runoff from the construction site or from storms shall be controlled, retarded, and diverted to protected drainage courses by means of diversion ditches, benches, berms, and by any measures required by area wide plans under the Clean Water Act.

b. Erosion and sedimentation control devices. The Contractor shall construct or install temporary and permanent erosion and sedimentation control features as indicated on the drawings. Controls shall be maintained until permanent drainage and erosion control facilities are completed and operative.

1.2.5 Contractor Facilities and Work Areas

The Contractor's field offices, staging areas, stockpile storage, and temporary buildings shall be placed in areas designated on the drawings or as directed by the Contracting Officer. Temporary movement or relocation of Contractor facilities shall be made only when approved. Spoil areas shall be managed and controlled to limit spoil intrusion into areas designated on the drawings and to prevent erosion of soil. Spoil areas shall be developed in accordance with the grading plan indicated on the drawings. Temporary excavation and embankments for plant and/or work areas shall be controlled to protect adjacent areas from despoilment.

1.3 WATER RESOURCES

The Contractor shall keep construction activities under surveillance, management, and control to avoid pollution of surface and ground waters. Toxic or hazardous chemicals shall not be applied to soil or vegetation when such application may cause contamination of the fresh water reserve. Monitoring of water areas affected by construction shall be the Contractor's responsibility. All water areas affected by construction activities shall be monitored by the Contractor.

1.4 AIR RESOURCES

Equipment operation and activities or processes performed by the Contractor in accomplishing the specified construction shall be in accordance with State and all Federal emission and performance laws and standards. Ambient Air Quality Standards set by the Environmental Protection Agency shall be maintained. Monitoring of air quality shall be the Contractor's responsibility. All air areas affected by the construction activities shall be monitored by the Contractor. Monitoring results will be periodically reviewed by the Government to ensure compliance.

1.4.1 Particulates

Dust particles; aerosols and gaseous by-products from construction activities; and processing and preparation of materials,; shall be controlled at all times, including weekends, holidays and hours when work is not in progress. The Contractor shall maintain excavations, stockpiles, permanent and temporary access roads, spoil areas, borrow areas, and other work areas within or outside the project boundaries free from particulates which would cause the air pollution standards to be exceeded or which would cause a hazard or a nuisance. Sprinkling, chemical treatment of an approved type, or other methods will be permitted to control particulates

in the work area. Sprinkling, to be efficient, must be repeated to keep the disturbed area damp at all times. The Contractor must have sufficient, competent equipment available to accomplish these tasks. Particulate control shall be performed as the work proceeds and whenever a particulate nuisance or hazard occurs.

1.4.2 Hydrocarbons and Carbon Monoxide

Hydrocarbons and carbon monoxide emissions from equipment shall be controlled to Federal and State allowable limits at all times.

1.4.3 Odors

Odors shall be controlled at all times for all construction activities, processing and preparation of materials.

1.4.4 Sound Intrusions

The Contractor shall keep construction activities under surveillance and control to minimize environment damage by noise. The Contractor shall comply with the provisions of the Air Reserve Base rules.

1.5 WASTE DISPOSAL

Disposal of wastes shall be as specified in Section 02220 DEMOLITION and as specified below.

1.5.1 Solid Wastes

Solid wastes (excluding clearing debris) shall be placed in containers which are emptied on a regular schedule. Handling and disposal shall be conducted to prevent contamination. Segregation measures shall be employed so that no hazardous or toxic waste will become co-mingled with solid waste. The Contractor shall transport solid waste off Government property and dispose of it in compliance with Federal, State, and local requirements for solid waste disposal.

1.5.2 Chemical Wastes

Chemicals shall be dispensed ensuring no spillage to ground or water. Periodic inspections of dispensing areas to identify leakage and initiate corrective action shall be performed and documented. This documentation will be periodically reviewed by the Government. Chemical waste shall be collected in corrosion resistant, compatible containers. Collection drums shall be monitored and removed to a staging or storage area when contents are within (6 inches) of the top. Wastes shall be disposed of in accordance with Federal and local laws and regulations.

1.5.3 Hazardous Wastes

The Contractor shall take sufficient measures to prevent spillage of hazardous and toxic materials during dispensing and shall collect waste in suitable containers observing compatibility. The Contractor shall transport hazardous waste off Government property and dispose of it in compliance with Federal and local laws and regulations. Spills of hazardous or toxic materials shall be immediately reported to the Contracting Officer. Cleanup and cleanup costs due to spills shall be the Contractor's responsibility.

1.5.4 Burning

Burning will not be allowed.

1.5.5 Construction Waste Water

Waste water from construction activities, such as on-site material processing, concrete curing, foundation and concrete clean-up water shall not be allowed to discharge to any surface or storm drain. Waste water may be disposed of off-site or within the perimeter of the project site, onto permeable surfaces such as grassy or unpaved areas and building excavations. All discharge shall be kept a reasonable distance from away from paved surfaces to prevent run-off into the drain systems.

1.6 HISTORICAL, ARCHAEOLOGICAL, AND CULTURAL RESOURCES

If during excavation or other construction activities any previously unidentified or unanticipated resources are discovered or found, all activities that may damage or alter such resources shall be temporarily suspended. Resources covered by this paragraph include but are not limited to: any human skeletal remains or burials; artifacts; shell, midden, bone, charcoal, or other deposits; rocks or coral alignments, pavings, wall, or other constructed features; and any indication of agricultural or other human activities. Upon such discovery or find, the Contractor shall immediately notify the Contracting Officer.

1.7 POST CONSTRUCTION CLEANUP

The Contractor shall clean up all areas used for construction.

1.8 RESTORATION OF LANDSCAPE DAMAGE

The Contractor shall restore landscape features damaged or destroyed during construction operations outside the limits of the approved work areas.

1.9 MAINTENANCE OF POLLUTION FACILITIES

The Contractor shall maintain permanent and temporary pollution control facilities and devices for the duration of the contract or for that length of time construction activities create the particular pollutant.

1.10 TRAINING OF CONTRACTOR PERSONNEL

The Contractor's personnel shall be trained in all phases of environmental protection. The training shall include methods of detecting and avoiding pollution, familiarization with pollution standards, both statutory and contractual, and installation and care of devices, vegetative covers, and instruments required for monitoring purposes to ensure adequate and continuous environmental pollution control.

-- End of Section --

SECTION TABLE OF CONTENTS

DIVISION 01 - GENERAL REQUIREMENTS

SECTION 01451

CONTRACTOR QUALITY CONTROL

4/97 Omaha Rev 3/01

PART 1 GENERAL

1.1 REFERENCES
1.2 PAYMENT

PART 2 PRODUCTS (Not Applicable)

PART 3 EXECUTION

3.1 GENERAL
3.2 QUALITY CONTROL PLAN
3.2.1 General
3.2.2 Content of the CQC Plan
3.2.3 Acceptance of Plan
3.2.4 Notification of Changes
3.3 COORDINATION MEETING
3.4 QUALITY CONTROL ORGANIZATION
3.4.1 General
3.4.2 CQC System Manager
3.4.3 CQC Personnel
3.4.4 Additional Requirement
3.4.5 Organizational Changes
3.5 SUBMITTALS AND DELIVERABLES
3.6 CONTROL
3.6.1 Preparatory Phase
3.6.2 Initial Phase
3.6.3 Follow-up Phase
3.6.4 Additional Preparatory and Initial Phases
3.7 TESTS
3.7.1 Testing Procedure
3.7.2 Testing Laboratories
3.7.2.1 Capability Check
3.7.2.2 Capability Recheck
3.7.3 Onsite Laboratory
3.7.4 Furnishing or Transportation of Samples for Testing
3.8 COMPLETION INSPECTION
3.8.1 Punch-Out Inspection
3.8.2 Pre-Final Inspection
3.8.3 Final Acceptance Inspection
3.9 DOCUMENTATION
3.10 SAMPLE FORMS
3.11 NOTIFICATION OF NONCOMPLIANCE

-- End of Section Table of Contents --

SECTION 01451

CONTRACTOR QUALITY CONTROL
4/97
Omaha Rev 3/01

PART 1 GENERAL

1.1 REFERENCES

The publications listed below form a part of this specification to the extent referenced. The publications are referred to in the text by basic designation only.

AMERICAN SOCIETY FOR TESTING AND MATERIALS (ASTM)

ASTM D 3740	(2001) Minimum Requirements for Agencies Engaged in the Testing and/or Inspection of Soil and Rock as Used in Engineering Design and Construction
ASTM E 329	(2000b) Agencies Engaged in the Testing and/or Inspection of Materials Used in Construction

1.2 PAYMENT

Separate payment will not be made for providing and maintaining an effective Quality Control program, and all costs associated therewith shall be included in the applicable unit prices or lump-sum prices contained in the Bidding Schedule.

PART 2 PRODUCTS (Not Applicable)

PART 3 EXECUTION

3.1 GENERAL

The Contractor is responsible for quality control and shall establish and maintain an effective quality control system in compliance with the Contract Clause titled "Inspection of Construction." The quality control system shall consist of plans, procedures, and organization necessary to produce an end product which complies with the contract requirements. The system shall cover all construction operations, both onsite and offsite, and shall be keyed to the proposed construction sequence. The site project superintendent will be held responsible for the quality of work on the job and is subject to removal by the Contracting Officer for non-compliance with the quality requirements specified in the contract. The site project superintendent in this context shall be the highest level manager responsible for the overall construction activities at the site, including quality and production. The site project superintendent shall maintain a physical presence at the site at all times, except as otherwise acceptable to the Contracting Officer, and shall be responsible for all construction and construction related activities at the site.

3.2 QUALITY CONTROL PLAN

3.2.1 General

The Contractor shall furnish for review by the Government, not later than 10 days after receipt of notice to proceed, the Contractor Quality Control (CQC) Plan proposed to implement the requirements of the Contract Clause titled "Inspection of Construction." The plan shall identify personnel, procedures, control, instructions, test, records, and forms to be used. The Government will consider an interim plan for the first 30 days of operation. Construction will be permitted to begin only after acceptance of the CQC Plan or acceptance of an interim plan applicable to the particular feature of work to be started. Work outside of the features of work included in an accepted interim plan will not be permitted to begin until acceptance of a CQC Plan or another interim plan containing the additional features of work to be started.

3.2.2 Content of the CQC Plan

The CQC Plan shall include, as a minimum, the following to cover all construction operations, both onsite and offsite, including work by subcontractors, fabricators, suppliers, and purchasing agents:

a. A description of the quality control organization, including a chart showing lines of authority and acknowledgment that the CQC staff shall implement the three phase control system for all aspects of the work specified. The staff shall include a CQC System Manager who shall report to the project superintendent.

b. The name, qualifications (in resume format), duties, responsibilities, and authorities of each person assigned a CQC function.

c. A copy of the letter to the CQC System Manager signed by an authorized official of the firm which describes the responsibilities and delegates sufficient authorities to adequately perform the functions of the CQC System Manager, including authority to stop work which is not in compliance with the contract. The CQC System Manager shall issue letters of direction to all other various quality control representatives outlining duties, authorities, and responsibilities. Copies of these letters shall also be furnished to the Government.

d. Procedures for scheduling, reviewing, certifying, and managing submittals, including those of subcontractors, offsite fabricators, suppliers, and purchasing agents. These procedures shall be in accordance with Section 01330 SUBMITTAL PROCEDURES.

e. Control, verification, and acceptance testing procedures for each specific test to include the test name, specification paragraph requiring test, feature of work to be tested, test frequency, and person responsible for each test. (Laboratory facilities will be approved by the Contracting Officer.)

f. Procedures for tracking preparatory, initial, and follow-up control phases and control, verification, and acceptance tests including documentation.

g. Procedures for tracking construction deficiencies from identification through acceptable corrective action. These procedures shall establish verification that identified deficiencies have been corrected.

h. Reporting procedures, including proposed reporting formats.

i. A list of the definable features of work. A definable feature of work is a task which is separate and distinct from other tasks, has separate control requirements, and may be identified by different trades or disciplines, or it may be work by the same trade in a different environment. Although each section of the specifications may generally be considered as a definable feature of work, there is frequently more than one definable features under a particular section. This list will be agreed upon during the coordination meeting.

3.2.3 Acceptance of Plan

Acceptance of the Contractor's plan is required prior to the start of construction. Acceptance is conditional and will be predicated on satisfactory performance during the construction. The Government reserves the right to require the Contractor to make changes in his CQC Plan and operations including removal of personnel, as necessary, to obtain the quality specified.

3.2.4 Notification of Changes

After acceptance of the CQC Plan, the Contractor shall notify the Contracting Officer in writing of any proposed change. Proposed changes are subject to acceptance by the Contracting Officer.

3.3 COORDINATION MEETING

After the Preconstruction Conference, before start of construction, and prior to acceptance by the Government of the CQC Plan, the Contractor shall meet with the Contracting Officer or Authorized Representative and discuss the Contractor's quality control system. The CQC Plan shall be submitted for review a minimum of 10 calendar days prior to the Coordination Meeting. During the meeting, a mutual understanding of the system details shall be developed, including the forms for recording the CQC operations, control activities, testing, administration of the system for both onsite and offsite work, and the interrelationship of Contractor's Management and control with the Government's Quality Assurance. Minutes of the meeting shall be prepared and distributed by the Contractor by the Government and signed by both the Contractor and the Contracting Officer. The minutes shall become a part of the contract file. There may be occasions when subsequent conferences will be called by either party to reconfirm mutual understandings and/or address deficiencies in the CQC system or procedures which may require corrective action by the Contractor.

3.4 QUALITY CONTROL ORGANIZATION

3.4.1 General

The requirements for the CQC organization are a CQC System Manager and sufficient number of additional qualified personnel to ensure safety and contract compliance. The Safety and Health Manager shall receive direction and authority from the CQC System Manager and shall serve as a member of the CQC staff. Personnel identified in the technical provisions as requiring specialized skills to assure the required work is being performed properly will also be included as part of the CQC organization. The Contractor's CQC staff shall maintain a presence at the site at all times during progress of the work and have complete authority and responsibility

to take any action necessary to ensure contract compliance. The CQC staff shall be subject to acceptance by the Contracting Officer. The Contractor shall provide adequate office space, filing systems and other resources as necessary to maintain an effective and fully functional CQC organization. Complete records of all letters, material submittals, show drawing submittals, schedules and all other project documentation shall be promptly furnished to the CQC organization by the Contractor. The CQC organization shall be responsible to maintain these documents and records at the site at all times, except as otherwise acceptable to the Contracting Officer.

3.4.2 CQC System Manager

The Contractor shall identify as CQC System Manager an individual within the onsite work organization who shall be responsible for overall management of CQC and have the authority to act in all CQC matters for the Contractor. The CQC System Manager shall be a construction person with a minimum of 5 years in related work. This CQC System Manager shall be on the site at all times during construction and shall be employed by the prime Contractor. The CQC System Manager shall be assigned as System Manager but may have duties as project superintendent in addition to quality control. An alternate for the CQC System Manager shall be identified in the plan to serve in the event of the System Manager's absence. The requirements for the alternate shall be the same as for the designated CQC System Manager.

3.4.3 CQC Personnel

A staff shall be maintained under the direction of the CQC system manager to perform all QC activities. The staff must be of sufficient size to ensure adequate QC coverage of all work phases, work shifts, and work crews involved in the construction. These personnel may perform other duties, but must be fully qualified by experience and technical training to perform their assigned QC responsibilities and must be allowed sufficient time to carry out these responsibilities. The QC plan will clearly state the duties and responsibilities of each staff member.

3.4.4 Additional Requirement

In addition to the above experience and education requirements the CQC System Manager shall have completed the course entitled "Construction Quality Management For Contractors" within the past five years and be in possession of the resulting certificate of instruction. If the individual designated as CQC System Manager does not currently meet this training requirement, the training must be accomplished within 60 days of the appointment to CQC System Manager. This course is periodically offered at each of the four area offices in the Omaha District according to the following revolving training schedule:

Badger Area	First Session	Between 15 & 25 April
	Second Session	Between 15 & 25 October

Point of Contact	Roy Brewer	(608) 388-4780
Black Hills Area	First Session	Between 1 & 10 March
	Second Session	Between 1 & 10 September
Point of Contact	Dwight Pochant	(605) 923-2983
Fort Crook Area	First Session	Between 15 & 25 January
	Second Session	Between 15 & 25 July
Point of Contact	Al Kreisler	(402) 293-2540
Rocky Mountain	First Session	Between 1 & 10 June
	Second Session	Between 1 & 10 December
Point of Contact	Paul Jendzejec	(719) 556-4184

The exact date and location for the sessions will be determined approximately 30 days in advance of the training. The cost of training is presently established at $25 to be paid by each student in advance of the training. For information about a particular session, the best source is the point of contact listed above..

3.4.5 Organizational Changes

The Contractor shall maintain the CQC staff at full strength at all times. When it is necessary to make changes to the CQC staff, the Contractor shall revise the CQC Plan to reflect the changes and submit the changes to the Contracting Officer for acceptance.

3.5 SUBMITTALS AND DELIVERABLES

Submittals shall be made as specified in Section 01330 SUBMITTAL PROCEDURES. The CQC organization shall be responsible for certifying that all submittals and deliverables are in compliance with the contract requirements. When Section 15950A HEATING, VENTILATING AND AIR CONDITIONING (HVAC) CONTROL SYSTEMS; 15951A DIRECT DIGITAL CONTROL FOR HVAC; 15990A TESTING, ADJUSTING, AND BALANCING OF HVAC SYSTEMS; or 15995A COMMISSIONING OF HVAC SYSTEMS are included in the contract, the submittals required by those sections shall be coordinated with Section 01330 SUBMITTAL PROCEDURES to ensure adequate time is allowed for each type of submittal required.

3.6 CONTROL

Contractor Quality Control is the means by which the Contractor ensures that the construction, to include that of subcontractors and suppliers, complies with the requirements of the contract. At least three phases of control shall be conducted by the CQC System Manager for each definable feature of work as follows:

3.6.1 Preparatory Phase

This phase shall be performed prior to beginning work on each definable feature of work, after all required plans/documents/materials are approved/accepted, and after copies are at the work site. This phase shall include:

a. A review of each paragraph of applicable specifications.

b. A review of the contract drawings.

c. A check to assure that all materials and/or equipment have been tested, submitted, and approved.

d. Review of provisions that have been made to provide required control inspection and testing.

e. Examination of the work area to assure that all required preliminary work has been completed and is in compliance with the contract.

f. A physical examination of required materials, equipment, and sample work to assure that they are on hand, conform to approved shop drawings or submitted data, and are properly stored.

g. A review of the appropriate activity hazard analysis to assure safety requirements are met.

h. Discussion of procedures for controlling quality of the work including repetitive deficiencies. Document construction tolerances and workmanship standards for that feature of work.

i. A check to ensure that the portion of the plan for the work to be performed has been accepted by the Contracting Officer.

j. Discussion of the initial control phase.

k. The Government shall be notified at least 48 hours in advance of beginning the preparatory control phase. This phase shall include a meeting conducted by the CQC System Manager and attended by the superintendent, other CQC personnel (as applicable), and the foreman responsible for the definable feature. The results of the preparatory phase actions shall be documented by separate minutes prepared by the CQC System Manager and attached to the daily CQC report. The Contractor shall instruct applicable workers as to the acceptable level of workmanship required in order to meet contract specifications.

l. Prior to the preparatory meeting for each definable feature of work, the Contractor shall provide all technical references (i.e. building codes, life safety codes, etc.) referenced in the project specifications for feature(s) of work being addressed at the preparatory meeting. These technical references shall be onsite and available for use by Contractor and Government personnel before the preparatory meeting is held and maintained until the feature(s) of work is/are accepted by the Government.

3.6.2 Initial Phase

This phase shall be accomplished at the beginning of a definable feature of work. The following shall be accomplished:

a. A check of work to ensure that it is in full compliance with contract requirements. Review minutes of the preparatory meeting.

b. Verify adequacy of controls to ensure full contract compliance. Verify required control inspection and testing.

c. Establish level of workmanship and verify that it meets minimum acceptable workmanship standards. Compare with required sample panels as appropriate.

d. Resolve all differences.

e. Check safety to include compliance with and upgrading of the safety plan and activity hazard analysis. Review the activity analysis with each worker.

f. The Government shall be notified at least 48 hours in advance of beginning the initial phase. Separate minutes of this phase shall be prepared by the CQC System Manager and attached to the daily CQC report. Exact location of initial phase shall be indicated for future reference and comparison with follow-up phases.

g. The initial phase should be repeated for each new crew to work onsite, or any time acceptable specified quality standards are not being met.

3.6.3 Follow-up Phase

Daily checks shall be performed to assure control activities, including control testing, are providing continued compliance with contract requirements, until completion of the particular feature of work. The checks shall be made a matter of record in the CQC documentation. Final follow-up checks shall be conducted and all deficiencies corrected prior to the start of additional features of work which may be affected by the deficient work. The Contractor shall not build upon nor conceal non-conforming work.

3.6.4 Additional Preparatory and Initial Phases

Additional preparatory and initial phases shall be conducted on the same definable features of work if the quality of on-going work is unacceptable, if there are changes in the applicable CQC staff, onsite production supervision or work crew, if work on a definable feature is resumed after a substantial period of inactivity, or if other problems develop.

3.7 TESTS

3.7.1 Testing Procedure

The Contractor shall perform specified or required tests to verify that control measures are adequate to provide a product which conforms to contract requirements. Upon request, the Contractor shall furnish to the Government duplicate samples of test specimens for possible testing by the Government. Testing includes operation and/or acceptance tests when specified. The Contractor shall procure the services of a Corps of Engineers approved testing laboratory or establish an approved testing laboratory at the project site. The Contractor shall perform the following activities and record and provide the following data:

a. Verify that testing procedures comply with contract requirements.

b. Verify that facilities and testing equipment are available and comply with testing standards.

c. Check test instrument calibration data against certified standards.

d. Verify that recording forms and test identification control number system, including all of the test documentation requirements, have been prepared.

e. Results of all tests taken, both passing and failing tests, shall be recorded on the CQC report for the date taken. Specification paragraph reference, location where tests were taken, and the sequential control number identifying the test shall be given. If approved by the Contracting Officer, actual test reports may be submitted later with a reference to the test number and date taken. An information copy of tests performed by an offsite or commercial test facility shall be provided directly to the Contracting Officer. Failure to submit timely test reports as stated may result in nonpayment for related work performed and disapproval of the test facility for this contract.

3.7.2 Testing Laboratories

3.7.2.1 Capability Check

The Government reserves the right to check laboratory equipment in the proposed laboratory for compliance with the standards set forth in the contract specifications and to check the laboratory technician's testing procedures and techniques. Laboratories utilized for testing soils, concrete, asphalt, and steel shall meet criteria detailed in ASTM D 3740 and ASTM E 329.

3.7.2.2 Capability Recheck

If the selected laboratory fails the capability check, the Contractor will be assessed the actual cost for the recheck to reimburse the Government for each succeeding recheck of the laboratory or the checking of a subsequently selected laboratory. Such costs will be deducted from the contract amount due the Contractor.

3.7.3 Onsite Laboratory

The Government reserves the right to utilize the Contractor's control testing laboratory and equipment to make assurance tests and to check the Contractor's testing procedures, techniques, and test results at no additional cost to the Government.

3.7.4 Furnishing or Transportation of Samples for Testing

Costs incidental to the transportation of samples or materials shall be borne by the Contractor. Samples of materials for test verification and acceptance testing by the Government shall be delivered to the Corps of Engineers Division Laboratory, f.o.b., at the following address:

For delivery by mail: Commander and Director
U.S. Army Engineer Waterways Experiment Station
Attn: CEWES-GS
3909 Hallsferry Road
Vicksburg, Mississippi 39180-6199

For other deliveries: Commander and Director
U.S. Army Engineer Waterways Experiment Station
Attn: CEWES-GS
3909 Hallsferry Road
Vicksburg, Mississippi 39180-6199

Coordination for each specific test, exact delivery location, and dates will be made through the Area Office.

3.8 COMPLETION INSPECTION

3.8.1 Punch-Out Inspection

Near the completion of all work or any increment thereof established by a completion time stated in the Special Clause entitled "Commencement, Prosecution, and Completion of Work," or stated elsewhere in the specifications, the CQC System Manager shall conduct an inspection of the work and develop a punch list of items which do not conform to the approved drawings and specifications. Such a list of deficiencies shall be included in the CQC documentation, as required by paragraph DOCUMENTATION below, and shall include the estimated date by which the deficiencies will be corrected. The CQC System Manager or staff shall make a second inspection to ascertain that all deficiencies have been corrected. Once this is accomplished, the Contractor shall notify the Government that the facility is ready for the Government Pre-Final inspection.

3.8.2 Pre-Final Inspection

The Government will perform this inspection to verify that the facility is complete and ready to be occupied. A Government Pre-Final Punch List may be developed as a result of this inspection. The Contractor's CQC System Manager shall ensure that all items on this list have been corrected before notifying the Government so that a Final inspection with the customer can be scheduled. Any items noted on the Pre-Final inspection shall be corrected in a timely manner. These inspections and any deficiency corrections required by this paragraph shall be accomplished within the time slated for completion of the entire work or any particular increment thereof if the project is divided into increments by separate completion dates.

3.8.3 Final Acceptance Inspection

The Contractor's Quality Control Inspection personnel, plus the superintendent or other primary management person, and the Contracting Officer's Representative shall be in attendance at this inspection. Additional Government personnel including, but not limited to, those from Base/Post Civil Facility Engineer user groups, and major commands may also be in attendance. The final acceptance inspection will be formally scheduled by the Contracting Officer based upon results of the Pre-Final inspection. Notice shall be given to the Contracting Officer at least 14 days prior to the final acceptance inspection and shall include the Contractor's assurance that all specific items previously identified to the Contractor as being unacceptable, along with all remaining work performed under the contract, will be complete and acceptable by the date scheduled for the final acceptance inspection. Failure of the Contractor to have all contract work acceptably complete for this inspection will be cause for the Contracting Officer to bill the Contractor for the Government's additional inspection cost in accordance with the contract clause titled "Inspection of Construction".

3.9 DOCUMENTATION

The Contractor shall maintain current records providing factual evidence that required quality control activities and/or tests have been performed. These records shall include the work of subcontractors and suppliers and

shall be on an acceptable form that includes, as a minimum, the following information:

a. Contractor/subcontractor and their area of responsibility.

b. Operating plant/equipment with hours worked, idle, or down for repair.

c. Work performed each day, giving location, description, and by whom. When Network Analysis (NAS) is used, identify each phase of work performed each day by NAS activity number.

d. Test and/or control activities performed with results and references to specifications/drawings requirements. The control phase should be identified (Preparatory, Initial, Follow-up). List deficiencies noted along with corrective action.

e. Quantity of materials received at the site with statement as to acceptability, storage, and reference to specifications/drawings requirements.

f. Submittals reviewed, with contract reference, by whom, and action taken.

g. Off-site surveillance activities, including actions taken.

h. Job safety evaluations stating what was checked, results, and instructions or corrective actions.

i. Instructions given/received and conflicts in plans and/or specifications.

j. Contractor's verification statement.

These records shall indicate a description of trades working on the project; the number of personnel working; weather conditions encountered; and any delays encountered. These records shall cover both conforming and deficient features and shall include a statement that equipment and materials incorporated in the work and workmanship comply with the contract. The original and one copy of these records in report form shall be furnished to the Contracting Officer's Representative on the first day following the date(s) covered by the report, except that reports need not be submitted for days on which no work is performed. As a minimum, one report shall be prepared and submitted for every 7 days of no work and on the last day of a no work period. All calendar days shall be accounted for throughout the life of the contract. The first report following a day of no work shall be for that day only. Reports shall be signed and dated by the CQC System Manager. The report from the CQC System Manager shall include copies of test reports and copies of reports prepared by all subordinate quality control personnel.

3.10 SAMPLE FORMS

Sample forms enclosed at the end of this section.

3.11 NOTIFICATION OF NONCOMPLIANCE

The Contracting Officer will notify the Contractor of any detected noncompliance with the foregoing requirements. The Contractor shall take

immediate corrective action after receipt of such notice. Such notice, when delivered to the Contractor at the work site, shall be deemed sufficient for the purpose of notification. If the Contractor fails or refuses to comply promptly, the Contracting Officer may issue an order stopping all or part of the work until satisfactory corrective action has been taken. No part of the time lost due to such stop orders shall be made the subject of claim for extension of time or for excess costs or damages by the Contractor.

_____
(FIRM NAME)

DAILY QUALITY CONTROL REPORT

Daily Report No.: _____ DATE: _____
Contract No. _____
Project Title & Location:
_____
Weather: ____ Precipitation: _____ in. _____ Temp:____ Min. ____ Max. ____

1. Contract/Subcontractors and Area of Responsibility:

NUMBER:	TRADE	HOURS	EMPLOYER	LOCATION/DESCRIPTION WORK

2. Operating Plant or Equipment. (Not hand tools)

Plant/Equipment	Date of Arrival/Departure	Date of Safety Check	Hours Used	Hours Idle	Hours Repair

3. Work Performed Today: (Indicate location and description of work performed by prime and/or subcontractors. When network analysis is used, identify work by NAS activity number).

_____
_____
_____
_____
_____
_____
_____
_____

4. Control Activities Performed:
   Preparatory Inspections: (Identify feature of work and attach minutes).
   Initial Inspections: (Identify feature of work and attach minutes).
   Follow-Up Inspections: (List inspections performed, results of inspection compared to specification requirements, and corrective actions taken when deficiencies are noted).

_____
_____
_____
_____
_____
_____
_____
_____
_____
_____
_____
_____
_____
_____

5. Tests Performed and Test Results: (Identify test requirement by paragraph number in specifications and/or sheet number in plans).

_____
_____
_____
_____
_____
_____
_____
_____

6. Material Received: (Note inspection results and storage provided).

_____
_____
_____
_____
_____
_____

7. Submittals Reviewed:

(a) Submittal No.	(b) Spec/Plan Reference	(c) By Whom	(d) Action
_____	_____	_____	_____
_____	_____	_____	_____
_____	_____	_____	_____
_____	_____	_____	_____
_____	_____	_____	_____

8. Offsite Surveillance Activities, Including Action Taken:

_____
_____
_____
_____
_____
_____
_____
_____

9. Job Safety: (List items checked, results, instructions and corrective actions taken).

_____
_____
_____
_____
_____
_____
_____
_____
_____

10. Remarks: (Instructions received or given. Conflict(s) in Plans and/or specifications. Delays encountered.).

_____
_____
_____
_____
_____
_____
_____

Contractor's Verification: On behalf of the Contractor, I certify this report is complete and correct, and all materials and equipment used and work performed during this reporting period are in compliance with the contract plans and specifications, to the best of my knowledge, except as may be noted above.

_____
CQC System Manager Date

-- End of Section --

SECTION TABLE OF CONTENTS

DIVISION 01 - GENERAL REQUIREMENTS

SECTION 01500

TEMPORARY CONSTRUCTION FACILITIES

02/97

1.1 GENERAL REQUIREMENTS
1.1.1 Site Plan
1.1.2 Identification of Employees
1.1.3 Employee Parking
1.2 AVAILABILITY AND USE OF UTILITY SERVICES
1.2.1 Payment for Utility Services
1.2.2 Meters and Temporary Connections
1.2.3 Advance Deposit
1.2.4 Final Meter Reading
1.2.5 Sanitation
1.2.6 Telephone
1.3 BULLETIN BOARD, PROJECT SIGN, AND PROJECT SAFETY SIGN
1.3.1 Bulletin Board
1.3.2 Project and Safety Signs
1.4 PROTECTION AND MAINTENANCE OF TRAFFIC
1.4.1 Not Used
1.4.2 Barricades
1.5 CONTRACTOR'S TEMPORARY FACILITIES
1.5.1 Administrative Field Offices
1.5.2 Storage Area
1.5.3 Supplemental Storage Area
1.5.4 Appearance of Trailers
1.5.5 Maintenance of Storage Area
1.5.6 Not Used
1.5.7 Security Provisions
1.6 GOVERNMENT FIELD OFFICE
1.6.1 Resident Engineer's Office
1.6.2 Trailer-Type Mobile Office
1.7 PLANT COMMUNICATION
1.8 TEMPORARY PROJECT SAFETY FENCING
1.9 CLEANUP
1.10 RESTORATION OF STORAGE AREA

-- End of Section Table of Contents --

SECTION 01500

TEMPORARY CONSTRUCTION FACILITIES
02/97

1.1 GENERAL REQUIREMENTS

1.1.1 Site Plan

The Contractor shall prepare a site plan indicating the proposed location and dimensions of any area to be fenced and used by the Contractor, the number of trailers to be used, avenues of ingress/egress to the fenced area and details of the fence installation. Any areas which may have to be graveled to prevent the tracking of mud shall also be identified. The Contractor shall also indicate if the use of a supplemental or other staging area is desired.

1.1.2 Identification of Employees

The Contractor shall be responsible for furnishing to each employee, and for requiring each employee engaged on the work to display, identification as approved and directed by the Contracting Officer. Prescribed identification shall immediately be delivered to the Contracting Officer for cancellation upon release of any employee. When required, the Contractor shall obtain and provide fingerprints of persons employed on the project. Contractor and subcontractor personnel shall wear identifying markings on hard hats clearly identifying the company for whom the employee works.

1.1.3 Employee Parking

Contractor employees shall park privately owned vehicles in an area designated by the Contracting Officer. This area will be within reasonable walking distance of the construction site. Contractor employee parking shall not interfere with existing and established parking requirements of the military installation.

1.2 AVAILABILITY AND USE OF UTILITY SERVICES

1.2.1 Payment for Utility Services

The Government will make all reasonably required utilities available to the Contractor from existing outlets and supplies, as specified in the contract. Unless otherwise provided in the contract, the amount of each utility service consumed shall be charged to or paid for by the Contractor at prevailing rates charged to the Government or, where the utility is produced by the Government, at reasonable rates determined by the Contracting Officer. The Contractor shall carefully conserve any utilities furnished without charge.

1.2.2 Meters and Temporary Connections

The Contractor, at its expense and in a manner satisfactory to the Contracting Officer, shall provide and maintain necessary temporary connections, distribution lines, and meter bases (Government will provide meters) required to measure the amount of each utility used for the purpose

of determining charges. The Contractor shall notify the Contracting Officer, in writing, 5 working days before final electrical connection is desired so that a utilities contract can be established. The Government will provide a meter and make the final hot connection after inspection and approval of the Contractor's temporary wiring installation. The Contractor shall not make the final electrical connection.

1.2.3 Advance Deposit

An advance deposit for utilities consisting of an estimated month's usage or a minimum of $50.00 will be required. The last monthly bills for the fiscal year will normally be offset by the deposit and adjustments will be billed or returned as appropriate. Services to be rendered for the next fiscal year, beginning 1 October, will require a new deposit. Notification of the due date for this deposit will be mailed to the Contractor prior to the end of the current fiscal year.

1.2.4 Final Meter Reading

Before completion of the work and final acceptance of the work by the Government, the Contractor shall notify the Contracting Officer, in writing, 5 working days before termination is desired. The Government will take a final meter reading, disconnect service, and remove the meters. The Contractor shall then remove all the temporary distribution lines, meter bases, and associated paraphernalia. The Contractor shall pay all outstanding utility bills before final acceptance of the work by the Government.

1.2.5 Sanitation

The Contractor shall provide and maintain within the construction area minimum field-type sanitary facilities approved by the Contracting Officer. Government toilet facilities will not be available to Contractor's personnel.

1.2.6 Telephone

The Contractor shall make arrangements and pay all costs for telephone facilities desired.

1.3 BULLETIN BOARD, PROJECT SIGN, AND PROJECT SAFETY SIGN

1.3.1 Bulletin Board

Immediately upon beginning of work, the Contractor shall provide a weatherproof glass-covered bulletin board not less than 36 by 48 inches in size for displaying the Equal Employment Opportunity poster, a copy of the wage decision contained in the contract, Wage Rate Information poster, and other information approved by the Contracting Officer. The bulletin board shall be located at the project site in a conspicuous place easily accessible to all employees, as approved by the Contracting Officer. Legible copies of the aforementioned data shall be displayed until work is completed. Upon completion of work the bulletin board shall be removed by and remain the property of the Contractor.

1.3.2 Project and Safety Signs

The requirements for the signs, their content, and location shall be as shown on the drawings. The signs shall be erected within 15 days after

receipt of the notice to proceed. The data required by the safety sign shall be corrected daily, with light colored metallic or non-metallic numerals. Upon completion of the project, the signs shall be removed from the site.

1.4 PROTECTION AND MAINTENANCE OF TRAFFIC

During construction the Contractor shall provide access and temporary relocated roads as necessary to maintain traffic. The Contractor shall maintain and protect traffic on all affected roads during the construction period except as otherwise specifically directed by the Contracting Officer. Measures for the protection and diversion of traffic, including the provision of watchmen and flagmen, erection of barricades, placing of lights around and in front of equipment and the work, and the erection and maintenance of adequate warning, danger, and direction signs, shall be as required by the State and local authorities having jurisdiction. The traveling public shall be protected from damage to person and property. The Contractor's traffic on roads selected for hauling material to and from the site shall interfere as little as possible with public traffic. The Contractor shall investigate the adequacy of existing roads and the allowable load limit on these roads. The Contractor shall be responsible for the repair of any damage to roads caused by construction operations.

1.4.1 Not Used

1.4.2 Barricades

The Contractor shall erect and maintain temporary barricades to limit public access to hazardous areas. Such barricades shall be required whenever safe public access to paved areas such as roads, parking areas or sidewalks is prevented by construction activities or as otherwise necessary to ensure the safety of both pedestrian and vehicular traffic. Barricades shall be securely placed, clearly visible with adequate illumination to provide sufficient visual warning of the hazard during both day and night.

1.5 CONTRACTOR'S TEMPORARY FACILITIES

1.5.1 Administrative Field Offices

The Contractor shall provide and maintain administrative field office facilities within the construction area at the designated site. Government office and warehouse facilities will not be available to the Contractor's personnel.

1.5.2 Storage Area

The Contractor shall designate a temporary storage area on the site. Trailers, materials, or equipment shall not be placed or stored outside the designated area unless such trailers, materials, or equipment are assigned a separate and distinct storage area by the Contracting Officer away from the vicinity of the construction site but within the military boundaries. Materials shall not be stockpiled outside the designated area in preparation for the next day's work. Mobile equipment, such as tractors, wheeled lifting equipment, cranes, trucks, and like equipment, shall be parked within the designated area at the end of each work day.

1.5.3 Supplemental Storage Area

Upon Contractor's request, the Contracting Officer will designate another

or supplemental area for the Contractor's use and storage of trailers, equipment, and materials. This area may not be in close proximity of the construction site but shall be within the military boundaries. The Contractor shall be responsible for cleanliness and orderliness of the area used and for the security of any material or equipment stored in this area. Utilities will not be provided to this area by the Government.

1.5.4 Appearance of Trailers

Trailers utilized by the Contractor for administrative or material storage purposes shall present a clean and neat exterior appearance and shall be in a state of good repair. Trailers which, in the opinion of the Contracting Officer, require exterior painting or maintenance will not be allowed on the military property.

1.5.5 Maintenance of Storage Area

Should the Contractor elect to traverse, with construction equipment or other vehicles, grassed or unpaved areas which are not established roadways, such areas shall be covered with a layer of gravel as necessary to prevent rutting and the tracking of mud onto paved or established roadways; gravel gradation shall be at the Contractor's discretion. Grass located within the boundaries of the construction site shall be mowed for the duration of the project. Grass and vegetation along fences, buildings, under trailers, and in areas not accessible to mowers shall be edged or trimmed neatly.

1.5.6 Not Used

1.5.7 Security Provisions

Adequate outside security lighting shall be provided at the Contractor's temporary facilities. The Contractor shall be responsible for the security of its own equipment; in addition, the Contractor shall notify the appropriate law enforcement agency requesting periodic security checks of the temporary project field office.

1.6 GOVERNMENT FIELD OFFICE

1.6.1 Resident Engineer's Office

The Contractor shall provide the Government Resident Engineer with an office, approximately 200 square feet in floor area, located where directed and providing space heat, electric light and power, and toilet facilities consisting of one lavatory and one water closet complete with connections to water and sewer mains. A mail slot in the door or a lockable mail box mounted on the surface of the door shall be provided. At completion of the project, the office shall remain the property of the Contractor and shall be removed from the site. Utilities shall be connected and disconnected in accordance with local codes and to the satisfaction of the Contracting Officer.

1.6.2 Trailer-Type Mobile Office

The Contractor may, at its option, furnish and maintain a trailer-type mobile office acceptable to the Contracting Officer and providing as a minimum the facilities specified above. The trailer shall be securely anchored to the ground at all four corners to guard against movement during high winds.

1.7 PLANT COMMUNICATION

Whenever the Contractor has the individual elements of its plant so located that operation by normal voice between these elements is not satisfactory, the Contractor shall install a satisfactory means of communication, such as telephone or other suitable devices. The devices shall be made available for use by Government personnel.

1.8 TEMPORARY PROJECT SAFETY FENCING

As soon as practicable, but not later than 15 days after the date established for commencement of work, the Contractor shall furnish and erect temporary project safety fencing at the work site. The safety fencing shall be a high visibility orange colored, high density polyethylene grid or approved equal, a minimum of 42 inches high, supported and tightly secured to steel posts located on maximum 10 foot centers, constructed at the approved location. The safety fencing shall be maintained by the Contractor during the life of the contract and, upon completion and acceptance of the work, shall become the property of the Contractor and shall be removed from the work site.

1.9 CLEANUP

Construction debris, waste materials, packaging material and the like shall be removed from the work site daily. Any dirt or mud which is tracked onto paved or surfaced roadways shall be cleaned away. Materials resulting from demolition activities which are salvageable shall be stored within the fenced area described above or at the supplemental storage area. Stored material not in trailers, whether new or salvaged, shall be neatly stacked when stored.

1.10 RESTORATION OF STORAGE AREA

Upon completion of the project and after removal of trailers, materials, and equipment from within the fenced area, the fence shall be removed and will become the property of the Contractor. Areas used by the Contractor for the storage of equipment or material, or other use, shall be restored to the original or better condition. Gravel used to traverse grassed areas shall be removed and the area restored to its original condition, including top soil and seeding as necessary.

-- End of Section --

SECTION TABLE OF CONTENTS

DIVISION 02 - SITE WORK

SECTION 02230

CLEARING AND GRUBBING

PART 1 GENERAL

1.1 DEFINITIONS
1.1.1 Clearing
1.1.2 Grubbing
1.2 SUBMITTALS

PART 2 PRODUCTS (Not Applicable)

PART 3 EXECUTION

3.1 CLEARING
3.2 GRUBBING
3.3 TREE REMOVAL
3.4 DISPOSAL OF MATERIALS
3.4.1 Miscellaneous Materials

-- End of Section Table of Contents --

SECTION 02230

CLEARING AND GRUBBING

PART 1 GENERAL

1.1 DEFINITIONS

1.1.1 Clearing

Clearing shall consist of the felling, trimming, and cutting of trees into sections and the satisfactory disposal of the trees and other vegetation designated for removal, including down timber, snags, brush, and rubbish occurring in the areas to be cleared.

1.1.2 Grubbing

Grubbing shall consist of the removal and disposal of stumps, roots larger than 75 mm in diameter, and matted roots from the designated grubbing areas.

1.2 SUBMITTALS

Government approval is required for submittals with a "GA" designation; submittals having an "FIO" designation are for information only. The following shall be submitted in accordance with Section 01330 SUBMITTAL PROCEDURES:

SD-18 Records; GA

Materials other than Salable Timber; GA

Written permission to dispose of such products on private property shall be filed with the Contracting Officer.

PART 2 PRODUCTS (Not Applicable)

PART 3 EXECUTION

3.1 CLEARING

Trees, stumps, roots, brush, and other vegetation in areas to be cleared shall be cut off flush with or below the original ground surface, except such trees and vegetation as may be indicated or directed to be left standing. Trees designated to be left standing within the cleared areas shall be trimmed of dead branches 40 mm or more in diameter and shall be trimmed of all branches the heights indicated or directed. Limbs and branches to be trimmed shall be neatly cut close to the bole of the tree or main branches. Cuts more than 40 mm in diameter shall be painted with an approved tree-wound paint. Trees and vegetation to be left standing shall be protected from damage incident to clearing, grubbing, and construction operations by the erection of barriers or by such other means as the circumstances require. Clearing shall also include the removal and disposal of structures that obtrude, encroach upon, or otherwise obstruct

the work.

3.2 GRUBBING

Material to be grubbed, together with logs and other organic or metallic debris not suitable for foundation purposes, shall be removed to a depth of not less than 455 mm below the original surface level of the ground in areas indicated to be grubbed and in areas indicated as construction areas under this contract, such as areas for buildings, and areas to be paved. Depressions made by grubbing shall be filled with suitable material and compacted to make the surface conform with the original adjacent surface of the ground.

3.3 TREE REMOVAL

Where indicated or directed, trees and stumps that are designated as trees shall be removed from areas outside those areas designated for clearing and grubbing. This work shall include the felling of such trees and the removal of their stumps and roots as specified in paragraph GRUBBING. Trees shall be disposed of as specified in paragraph DISPOSAL OF MATERIALS.

3.4 DISPOSAL OF MATERIALS

3.4.1 Miscellaneous Materials

Logs, stumps, roots, brush, rotten wood, and other refuse from the clearing and grubbing operations, except for salable timber, shall be disposed of in off-site locations at the Contractor's responsibility except when otherwise directed in writing. No refuse may be burned on the construction site.

-- End of Section --

SECTION TABLE OF CONTENTS

DIVISION 02 - SITE WORK

SECTION 02300

EARTHWORK

PART 1 GENERAL

1.1 REFERENCES
1.2 DEFINITIONS
1.2.1 Satisfactory Materials
1.2.2 Unsatisfactory Materials
1.2.3 Degree of Compaction
1.2.4 Topsoil
1.3 SUBMITTALS
1.4 SUBSURFACE DATA
1.5 CLASSIFICATION OF EXCAVATION
1.6 BLASTING
1.7 UTILIZATION OF EXCAVATED MATERIALS

PART 2 PRODUCTS (Not Applicable)

PART 3 EXECUTION

3.1 STRIPPING OF TOPSOIL
3.2 GENERAL EXCAVATION
3.2.1 Ditches, Gutters, and Channel Changes
3.2.2 Drainage Structures
3.3 SELECTION OF BORROW MATERIAL
3.4 OPENING AND DRAINAGE OF EXCAVATION AND BORROW PITS
3.5 GRADING AREAS
3.6 BACKFILL
3.7 PREPARATION OF GROUND SURFACE FOR EMBANKMENTS
3.7.1 General Requirements
3.7.2 Frozen Material
3.8 EMBANKMENTS
3.8.1 Earth Embankments
3.9 SUBGRADE PREPARATION
3.9.1 Construction
3.9.2 Compaction
3.10 FINISHING
3.11 PLACING TOPSOIL
3.12 TESTING
3.12.1 Fill and Backfill Material Gradation
3.12.2 In-Place Densities of fills and Backfills
3.12.3 Moisture Contents
3.12.4 Optimum Moisture and Laboratory Maximum Density
3.12.5 Tolerance Tests for Subgrades
3.13 SUBGRADE AND EMBANKMENT PROTECTION

-- End of Section Table of Contents --

SECTION 02300

EARTHWORK

PART 1 GENERAL

1.1 REFERENCES

The publications listed below form a part of this specification to the extent referenced. The publications are referred to in the text by basic designation only.

AMERICAN SOCIETY FOR TESTING AND MATERIALS (ASTM)

ASTM D 422	(1963; R 1990) Particle-Size Analysis of Soils
ASTM D 1556	(1990; R 1996) Density and Unit Weight of Soil in Place by the Sand-Cone Method
ASTM D 2487	(1993) Classification of Soils for Engineering Purposes (Unified Soil Classification System)
ASTM D 2922	(1996) Density of Soil and Soil-Aggregate in Place by Nuclear Methods (Shallow Depth)
ASTM D 2937	(1994) Density of Soil in Place by the Drive-Cylinder Method
ASTM D 3017	(1988; R 1993) Water Content of Soil and Rock in Place by Nuclear Methods (Shallow Depth)

1.2 DEFINITIONS

1.2.1 Satisfactory Materials

Satisfactory materials shall comprise any materials classified by ASTM D 2487 as GW, GP, SW. GM, GC, SM, and SC, or combinations of these soils such as SW-SM, etc. may be used as fill if located above the water table and containing less than 35% passing the 0.075 mm sieve and have a liquid limit (LL) of less than 30% and having a maximum particle size of 100 mm. All soil shall be free of trash, debris, roots or other organic matter, or stones larger than 75 mm in any dimension.

1.2.2 Unsatisfactory Materials

Materials which do not comply with the requirements for satisfactory materials are unsatisfactory. Unsatisfactory materials also include man-made fills; trash; refuse; backfills from previous construction; and material classified as satisfactory which contains root and other organic

matter or frozen material. The Contracting Officer shall be notified of any contaminated materials.

1.2.3 Degree of Compaction

Degree of compaction required is expressed as a percentage of the maximum density obtained by the test procedure presented in ASTM D 1557 abbreviated as a percent of laboratory maximum density.

1.2.4 Topsoil

Topsoil shall be stripped below existing grade within the designated excavations and grading lines to at least 200 mm below the surface. Topsoil meeting PLANTINGS requirements shall be deposited in storage piles for later use. Excess topsoil shall be disposed as specified for excess excavated material.

Fertile, friable, natural loam containing humus and capable of sustaining vigorous plant growth within a pH range of 5.5 to 7.5 and suitable for topsoil may be obtained from offsite areas. Soil shall be free of noxious weeds or seeds or clods of hard earth, plants or their roots,sticks and other extraneous matter.

1.3 SUBMITTALS

Government approval is required for submittals with a "GA" designation; submittals having an "FIO" designation are for information only. The following shall be submitted in accordance with Section 01330 SUBMITTAL PROCEDURES:

SD-08 Statements; GA

Earthwork; GA

Procedure and location for disposal of unused satisfactory material.

SD-09 Reports; GA

Testing; GA

Within 24 hours of conclusion of physical tests, three copies of test results, including calibration curves and results of calibration tests.

SD-13 Certificates; GA

Testing; GA

Qualifications of the commercial testing laboratory or Contractor's testing facilities.

1.4 SUBSURFACE DATA

Subsurface soil boring logs are appended to the SPECIAL CONTRACT REQUIREMENTS. The subsoil investigation report and samples of materials taken from subsurface investigations may be examined at the offices of American Engineering and Testing, Inc., 550 Cleveland Avenue North, St. Paul, MN 55114 (651) 659 - 9001. These data represent the best subsurface information available; however, variations may exist in the subsurface between boring locations.

1.5 CLASSIFICATION OF EXCAVATION

No consideration will be given to the nature of the materials, and all excavation will be designated as unclassified excavation.

1.6 BLASTING

Blasting will not be permitted.

1.7 UTILIZATION OF EXCAVATED MATERIALS

Unsatisfactory materials removed from excavations shall be disposed of in designated waste disposal or spoil areas. Satisfactory material removed from excavations shall be used, insofar as practicable, in the construction of fills, embankments, subgrades, shoulders, bedding (as backfill), and for similar purposes. No satisfactory excavated material shall be wasted without specific written authorization. Satisfactory material authorized to be wasted shall be disposed of in designated areas approved for surplus material storage or designated waste areas as directed. Newly designated waste areas on Government-controlled land shall be cleared and grubbed before disposal of waste material thereon. Coarse rock from excavations shall be stockpiled and used for constructing slopes or embankments adjacent to streams, or sides and bottoms of channels and for protecting against erosion. No excavated material shall be disposed of to obstruct the flow of any stream, endanger a partly finished structure, impair the efficiency or appearance of any structure, or be detrimental to the completed work in any way.

PART 2 PRODUCTS (Not Applicable)

PART 3 EXECUTION

3.1 STRIPPING OF TOPSOIL

Where indicated or directed, topsoil shall be stripped to a depth of 200 Topsoil shall be spread on areas already graded and prepared for topsoil, or transported and deposited in stockpiles convenient to areas that are to receive application of the topsoil later, or at locations indicated or specified. Topsoil shall be kept separate from other excavated materials, brush, litter, objectionable weeds, roots, stones larger than 50 mm in diameter, and other materials that would interfere with planting and maintenance operations. Any surplus of topsoil from excavations and grading shall be stockpiled in locations indicated.

3.2 GENERAL EXCAVATION

The Contractor shall perform excavation of every type of material encountered within the limits of the project to the lines, grades, and elevations indicated and as specified. Grading shall be in conformity with the typical sections shown and the tolerances specified in paragraph FINISHING. Satisfactory excavated materials shall be transported to and placed in fill or embankment within the limits of the work. Unsatisfactory materials encountered within the limits of the work shall be excavated below grade and replaced with satisfactory materials as directed. Such excavated material and the satisfactory material ordered as replacement shall be included in excavation. Surplus satisfactory excavated material not required for fill or embankment shall be disposed of in areas approved for surplus material storage or designated waste areas. Unsatisfactory

excavated material shall be disposed of in designated waste or spoil areas. During construction, excavation and fill shall be performed in a manner and sequence that will provide proper drainage at all times. Material required for fill or embankment in excess of that produced by excavation within the grading limits shall be excavated from other approved areas selected by the Contractor as specified.

3.2.1 Ditches, Gutters, and Channel Changes

Excavation of ditches, gutters, and channel changes shall be accomplished by cutting accurately to the cross sections, grades, and elevations shown. Ditches and gutters shall not be excavated below grades shown. Excessive open ditch or gutter excavation shall be backfilled with satisfactory, thoroughly compacted, material or with suitable stone or cobble to grades shown. Material excavated shall be disposed of as shown or as directed, except that in no case shall material be deposited less than from the edge of a ditch. The Contractor shall maintain excavations free from detrimental quantities of leaves, brush, sticks, trash, and other debris until final acceptance of the work.

3.2.2 Drainage Structures

Excavations shall be made to the lines, grades, and elevations shown, or as directed. Trenches and foundation pits shall be of sufficient size to permit the placement and removal of forms for the full length and width of structure footings and foundations as shown. Rock or other hard foundation material shall be cleaned of loose debris and cut to a firm, level, stepped, or serrated surface. Loose disintegrated rock and thin strata shall be removed. When concrete or masonry is to be placed in an excavated area, the bottom of the excavation shall not be disturbed. Excavation to the final grade level shall not be made until just before the concrete or masonry is to be placed.

3.3 SELECTION OF BORROW MATERIAL

Borrow material shall be selected to meet the requirements and conditions of the particular fill or embankment for which it is to be used. Borrow material shall be obtained from approved off-site sources. Unless otherwise provided in the contract, the Contractor shall obtain from the owners the right to procure material, pay royalties and other charges involved, and bear the expense of developing the sources, including rights-of-way for hauling. Borrow material from approved sources on Government-controlled land may be obtained without payment of royalties. No borrow shall be obtained within the limits of the project site.

3.4 OPENING AND DRAINAGE OF EXCAVATION AND BORROW PITS

The Contractor shall notify the Contracting Officer sufficiently in advance of the opening of any excavation or borrow pit to permit elevations and measurements of the undisturbed ground surface to be taken. Except as otherwise permitted, borrow pits and other excavation areas shall be excavated providing adequate drainage. Overburden and other spoil material shall be transported to designated spoil areas or otherwise disposed of as directed. Borrow pits shall be neatly trimmed and drained after the excavation is completed. The Contractor shall ensure that excavation of any area, operation of borrow pits, or dumping of spoil material results in minimum detrimental effects on natural environmental conditions.

3.5 GRADING AREAS

Where indicated, work will be divided into grading areas within which satisfactory excavated material shall be placed in embankments, fills, and required backfills. The Contractor shall not haul satisfactory material excavated in one grading area to another grading area except when so directed in writing.

3.6 BACKFILL

Backfill adjacent to any and all types of structures shall be placed and compacted to at least 90 percent laboratory maximum density for cohesive materials or 95 percent laboratory maximum density for cohesionless materials in accordance with MnDOT 2112, to prevent wedging action or eccentric loading upon or against the structure. Ground surface on which backfill is to be placed shall be prepared as specified in paragraph PREPARATION OF GROUND SURFACE FOR EMBANKMENTS. Compaction requirements for backfill materials shall also conform to the applicable portions of paragraphs PREPARATION OF GROUND SURFACE FOR EMBANKMENTS, EMBANKMENTS, and SUBGRADE PREPARATION, Section 02630 STORM-DRAINAGE SYSTEM; Section 02315 EXCAVATION, FILLING and BACKFILLING FOR BUILDINGS; and Section 02316 EXCAVATION, TRENCHING, AND BACKFILLING FOR UTILITIES SYSTEMS. Compaction shall be accomplished by sheepsfoot rollers, pneumatic-tired rollers, steel-wheeled rollers, vibratory compactors, or other approved equipment.

3.7 PREPARATION OF GROUND SURFACE FOR EMBANKMENTS

3.7.1 General Requirements

Soil on the site near the surface has a high amount of clay with high moisture content. This soil can become difficult to work with if low ground pressure equipment is not used. Increased difficulties can be expected during periods of wet weather, particularly during the spring runoff. Subsurface water level fluctuations may occur over time due to seasonal and irrigation effects. Generally, the water level is highest in the spring and early summer, and lowest in the fall and winter months. If excavations extend down near the subsurface water level, care should be taken to dewater the excavations. The subgrade should not be scarified and recompacted prior to fill placement. Care should be taken not to disturb the natural soils below building areas. All excavation and embankment work shall be accomplished during the dry season if possible.

3.7.2 Frozen Material

Embankment shall not be placed on a foundation which contains frozen material, or which has been subjected to freeze-thaw action. This prohibition encompasses all foundation types, including the natural ground, all prepared subgrades (whether in an excavation or on an embankment) and all layers of previously placed and compacted earth fill which become the foundations for successive layers of earth fill. All material that freezes or has been subjected to freeze-thaw action during the construction work, or during periods of temporary shutdowns, such as, but not limited to, nights, holidays, weekends, winter shutdowns, or earthwork operations, shall be removed to a depth that is acceptable to the Contracting Officer and replaced with new material. Alternatively, the material will be thawed, dried, reworked, and recompacted to the specified criteria before additional material is placed. The Contracting Officer will determine when placement of fill shall cease due to cold weather. The Contracting Officer may elect to use average daily air temperatures, and/or physical observation of the soils for his determination. Embankment material shall

not contain frozen clumps of soil, snow, or ice.

3.8 EMBANKMENTS

3.8.1 Earth Embankments

Earth embankments shall be constructed from satisfactory materials free of organic or frozen material and rocks with any dimension greater than The material shall be placed in successive horizontal layers of loose material not more than 200 mm in depth. Each layer shall be spread uniformly on a soil surface that has been moistened or aerated as necessary. After spreading, each layer shall be broken up; moistened or aerated as necessary; thoroughly mixed; and compacted to at least 90 percent laboratory maximum density . Compaction requirements for the upper portion of earth embankments forming subgrade for pavements shall be identical with those requirements specified in paragraph SUBGRADE PREPARATION. Compaction shall be accomplished by sheepsfoot rollers, pneumatic-tired rollers, steel-wheeled rollers, vibratory compactors, or other approved equipment.

3.9 SUBGRADE PREPARATION

3.9.1 Construction

Subgrade shall be shaped to line, grade, and cross section, and compacted as specified in accordance with MnDOT 2112. Soft or otherwise unsatisfactory material shall be removed and replaced with satisfactory excavated material or other approved material as directed. Low areas resulting from removal of unsatisfactory material shall be brought up to required grade with unsatisfactory materials, and the entire subgrade shall be shaped to line, grade, and cross section and compacted as specified. After rolling, the surface of the subgrade for roadways and parking areas shall not show deviations greater than 15 millimeters when tested with a 3 meter straightedge applied both parallel and at right angles to the centerline of the area. The elevation of the finish subgrade, other than those surfaces that are to be paved or where buildings are located, shall not vary more than 15 mm from the established grade and cross section.

3.9.2 Compaction

Compaction shall be accomplished by sheepsfoot rollers, pneumatic-tired rollers, steel-wheeled rollers, vibratory compactors, or other approved equipment. Except for paved areas, each layer of the embankment shall be compacted to at least the percent of laboratory maximum density as determined by ASTM D-1557 shown in Table 1.

Table 1

Fill to Support	Minimum Compaction
Foundations	95%
Concrete Slabs	90%
Retaining Wall backfill	88%
Landscaping	85%

3.10 FINISHING

The surface of excavations, embankments, and subgrades shall be finished to a smooth and compact surface in accordance with the lines, grades, and cross sections or elevations shown. The degree of finish for graded areas

shall be within 30 mm of the grades and elevations indicated except that the degree of finish for subgrades shall be specified in paragraph SUBGRADE PREPARATION. Gutters and ditches shall be finished in a manner that will result in effective drainage. The surface of areas to be turfed shall be finished to a smoothness suitable for the application of turfing materials.

3.11 PLACING TOPSOIL

On areas to receive topsoil, the compacted subgrade soil shall be scarified to a 50 mm depth for bonding of topsoil with subsoil. Topsoil then shall be spread evenly to a thickness of 200 mm and graded to the elevations and slopes shown. Topsoil shall not be spread when frozen or excessively wet or dry. Material required for topsoil in excess of that produced by excavation within the grading limits shall be obtained from offsite areas.

3.12 TESTING

Testing shall be performed by an approved commercial testing laboratory or by the Contractor subject to approval in accordance with MnDOT 2112. If the Contractor elects to establish testing facilities, no work requiring testing will be permitted until the Contractor's facilities have been inspected and approved by the Contracting Officer. The first inspection will be at the expense of the Government. Cost incurred for any subsequent inspections required because of failure of the first inspection will be charged to the Contractor. Field in-place density shall be determined in accordance with ASTM D 1556 or ASTM D 2922. When ASTM D 2922 is used, the calibration curves shall be checked and adjusted using only the sand cone method as described in ASTM D 1556. ASTM D 2922 results in a wet unit weight of soil and when using this method ASTM D 3017 shall be used to determine the moisture content of the soil. The calibration curves furnished with the moisture gauges shall also be checked along with density calibration checks as described in ASTM D 3017; the calibration checks of both the density and moisture gauges shall be made at the beginning of a job on each different type of material encountered and at intervals as directed by the Contracting Officer. ASTM D 2937, Drive Cylinder Method shall be used only for soft, fine-grained, cohesive soils. When test results indicate, as determined by the Contracting Officer, that compaction is not as specified, the material shall be removed, replaced and recompacted to meet specification requirements. Tests on recompacted areas shall be performed to determine conformance with specification requirements. Inspections and test results shall be certified by a registered professional civil engineer. These certifications shall state that the tests and observations were performed by or under the direct supervision of the engineer and that the results are representative of the materials or conditions being certified by the tests. The following number of tests, if performed at the appropriate time, will be the minimum acceptable for each type operation.

3.12.1 Fill and Backfill Material Gradation

One test per 200 cubic meters stockpiled or in-place source material. Gradation of fill and backfill material shall be determined in accordance with ASTM D 422.

3.12.2 In-Place Densities of fills and Backfills

a. One test per 167 square or fraction thereof, of each lift of fill or backfill areas compacted by other than hand or hand-operated machines. The density of each lift of fill or backfill material

for trenches, pits, building perimeters or other structures which are compacted with hand or hand-operated machines shall be tested as follows: One test per each area less than 166 square meters, or one test for each 30 linear meters of long narrow fills but no less than one test. If ASTM D 2922 is used, in-place densities shall be checked by ASTM D 1556 as follows: One check per lift for each 30 linear meters of long narrow fills, and a minimum of 1 check per lift for other fill and backfill areas.

3.12.3 Moisture Contents

In the stockpile, excavation, or borrow areas, a minimum of two tests per day per type of material or source of material being placed during stable weather conditions shall be performed. During unstable weather, tests shall be made as dictated by local conditions and approved by the Contracting Officer. Moisture content shall be tested in accordance with ASTM D 2216.

3.12.4 Optimum Moisture and Laboratory Maximum Density

Tests shall be made for each type material or source of material including borrow material to determine the optimum moisture and laboratory maximum density values. One representative test per 150 cubic of fill and backfill, or when any change in material occurs which may affect the optimum moisture content or laboratory maximum density.

3.12.5 Tolerance Tests for Subgrades

Continuous checks on the degree of finish specified in paragraph SUBGRADE PREPARATION shall be made during construction of the subgrades.

3.13 SUBGRADE AND EMBANKMENT PROTECTION

During construction, embankments and excavations shall be kept shaped and drained. Ditches and drains along subgrade shall be maintained to drain effectively at all times. The finished subgrade shall not be disturbed by traffic or other operation and shall be protected and maintained by the Contractor in a satisfactory condition until ballast, subbase, base, or pavement is placed. The storage or stockpiling of materials on the finished subgrade will not be permitted. No subbase, base course, ballast, or pavement shall be laid until the subgrade has been checked and approved, and in no case shall subbase, base, surfacing, pavement, or ballast be placed on a muddy, spongy, or frozen subgrade.

-- End of Section --

SECTION TABLE OF CONTENTS

DIVISION 02 - SITE WORK

SECTION 02315

EXCAVATION, FILLING AND BACKFILLING FOR BUILDINGS

PART 1 GENERAL

1.1 REFERENCES
1.2 Definitions 1.2.1 Degree of Compaction
1.3 SUBMITTALS

PART 2 PRODUCTS

2.1 MATERIALS
2.1.1 Satisfactory Materials
2.1.2 Unsatisfactory Materials
2.1.3 Expansive Soils
2.1.4 Nonfrost Susceptible (NFS) Material
2.2 CAPILLARY WATER BARRIER

PART 3 EXECUTION

3.1 CLEARING AND GRUBBING
3.2 TOPSOIL
3.3 EXCAVATION
3.4 DRAINAGE AND DEWATERING
3.4.1 Drainage
3.4.2 Dewatering
3.5 SHORING
3.6 CLASSIFICATION OF EXCAVATION
3.7 BLASTING
3.8 UTILITY AND DRAIN TRENCHES
3.9 BORROW
3.10 EXCAVATED MATERIALS
3.11 FINAL GRADE OF SURFACES TO SUPPORT CONCRETE
3.12 SUBGRADE PREPARATION
3.13 FILLING AND BACKFILLING
3.14 TESTING
3.14.1 In-Place Densities
3.14.1.1 In-Place Density of Subgrades
3.14.1.2 In-Place Density of Fills and Backfills
3.14.2 Moisture Content
3.14.3 Optimum Moisture and Laboratory Maximum Density
3.15 CAPILLARY WATER BARRIER
3.16 GRADING
3.17 SPREADING TOPSOIL
3.18 PROTECTION

-- End of Section Table of Contents --

SECTION 02315

EXCAVATION, FILLING AND BACKFILLING FOR BUILDINGS

PART 1 GENERAL

This section includes the excavation, filling and backfilling, dewatering, shoring and grading for building construction.

1.1 REFERENCES

The publications listed below form a part of this specification to the extent referenced. The publications are referred to in the text by basic designation only.

AMERICAN SOCIETY FOR TESTING AND MATERIALS (ASTM)

ASTM D 1556	(1990; R 1996) Density and Unit Weight of Soil in Place by the Sand-Cone Method
ASTM D 1557	(1991) Laboratory Compaction Characteristics of Soil Using Modified Effort (56,000 ft-lbf/cu. ft. (2,700 kN-m/cu.m.))
ASTM D 2216	(1992) Laboratory Determination of Water (Moisture) Content of Soil, and Rock
ASTM D 2487	(1993) Classification of Soils for Engineering Purposes (Unified Soil Classification System)
ASTM D 2922	(1996) Density of Soil and Soil-Aggregate in Place by Nuclear Methods (Shallow Depth)
ASTM D 2937	(1994) Density of Soil in Place by the Drive-Cylinder Method
ASTM D 3017	(1988; R 1993) Water Content of Soil and Rock in Place by Nuclear Methods (Shallow Depth)
ASTM D 4318	(1995a) Liquid Limit, Plastic Limit, and Plasticity Index of Soils

1.2 Definitions

1.2.1 Degree of Compaction

Degree of compaction is expressed as a percentage of the maximum density obtained by the test procedure presented in ASTM D 1557, abbreviated as percent laboratory maximum density.

1.3 SUBMITTALS

Government approval is required for submittals with a "GA" designation; submittals having an "FIO" designation are for information only. The following shall be submitted in accordance with Section 01330 SUBMITTAL PROCEDURES:

1. Field Density Tests; GA
2. Testing of Backfill Materials; GA

Copies of all laboratory and field test reports must be provided to the Contracting Officer within 24 hours of the completion of the test.

PART 2 PRODUCTS

2.1 MATERIALS

2.1.1 Satisfactory Materials

Satisfactory materials shall comprise any materials classified by ASTM D 2487 as GW, GP, or SW.GM, GC, SM and SC, or combinations of these soils such as SW-SM, etc... may be used as structural fill if located above the water table and containing less than 35% passing the 0.075 mm sieve and having a liquid limit (LL) of less than 30% and having a maximum particle size of 100 mm. All soil shall be free of trash, debris, roots or other organic matter, or stones larger than 75 mm in any dimension.

2.1.2 Unsatisfactory Materials

Materials which do not comply with the requirements for satisfactory materials are unsatisfactory. Unsatisfactory materials also include man-made fills, trash, refuse, or backfills from previous construction. Unsatisfactory material also includes material classified as satisfactory which contains root and other organic matter, frozen material, and stones larger than 75 mm in any dimension. The Contracting Officer shall be notified of any contaminated materials.

2.1.3 Expansive Soils

Expansive soils are defined as soils that have a plasticity index equal to or greater than 15% when tested in accordance with ASTM D 4318.

2.1.4 Nonfrost Susceptible (NFS) Material

Nonfrost susceptible material shall be a uniformly graded washed sand with a maximum particle size of 10 mm and less than 5 percent passing the 0.075 mm size sieve, and with not more than 3 percent by weight finer than 0.02 mm grain size free of friable deleterious, soluble and organic matter.

2.2 CAPILLARY WATER BARRIER

Capillary Water Barrier shall consist of clean, crushed, nonporous rock, crushed gravel, or uncrushed gravel. The maximum particle size shall be 37.5 mm and no more than 2 percent by weight shall pass the 4.75 mm size sieve.

PART 3 EXECUTION

3.1 CLEARING AND GRUBBING

Clearing and grubbing is specified in Section 02230 CLEARING AND GRUBBING. The areas within lines 1.5 meters outside of each building and structure line shall be cleared and grubbed of trees, stumps, roots, brush and other vegetation, debris, existing foundations, pavements, utility lines, structures, fences, and other items that would interfere with construction operations. Stumps, logs, roots, and other organic matter shall be completely removed and the resulting depressions shall be filled with satisfactory material, placed and compacted in accordance with paragraph FILLING AND BACKFILLING. Materials removed shall be disposed in areas outside the limits of Government-controlled property at the Contractor's responsibility.

3.2 TOPSOIL

Topsoil shall be stripped below existing grade within the designated excavations and grading lines to a depth of 200 mm. Topsoil meeting PLANTING requirements shall be deposited in storage piles for later use. Excess topsoil shall be disposed as specified for excess excavated material.

3.3 EXCAVATION

Excavation shall conform to the dimensions and elevations indicated for each building, structure, and footing except as specified, and shall include trenching for utility and foundation drainage systems to a point beyond the building line of each building and structure, excavation for outside grease interceptors, underground fuel tanks, and all work incidental thereof. Excavation shall extend a sufficient distance from walls and footings to allow for placing and removal of forms. Excavations below indicated depths will not be permitted except to remove unsatisfactory material. Unsatisfactory material encountered below the grades shown shall be removed as directed and replaced with satisfactory material. Satisfactory material removed below the depths indicated, without specific direction of the Contracting Officer, shall be replaced, at no additional cost to the Government, with satisfactory materials to the indicated excavation grade; except that concrete footings shall be increased in thickness to the bottom of the overdepth excavations and over-break in rock excavation. Satisfactory material shall be placed and compacted as specified in paragraph FILLING AND BACKFILLING. Determination of elevations and measurements of approved overdepth excavation of unsatisfactory material below grades indicated shall be done under the direction of the Contracting Officer.

3.4 DRAINAGE AND DEWATERING

General Note:

Soil on the site near the surface has a high amount of clay with high moisture content. This soil can become difficult to work with if low ground pressure equipment is not used. Increased difficulties can be expected during periods of wet weather, particularly during the spring runoff. Subsurface water level fluctuations may occur over time due to seasonal and irrigation effects. Generally, the water level is highest in the spring and early summer, and lowest in the fall and winter months. If excavations extend down near the subsurface water level, care should be taken to dewater the excavations. The subgrade should not be scarified and recompacted prior to fill placement. Care should be taken not to disturb the natural soils below the building areas. All excavation and embankment work shall be accomplished during the dry season if possible.

3.4.1 Drainage

Surface water shall be directed away from excavation and construction sites to prevent erosion and undermining of foundations. Diversion ditches, dikes and grading shall be provided and maintained as necessary during construction. Excavated slopes and backfill surfaces shall be protected to prevent erosion and sloughing. Excavation shall be performed so that the site, the area immediately surrounding the site, and the area affecting operations at the site shall be continually and effectively drained.

3.4.2 Dewatering

Groundwater flowing toward or into excavations shall be controlled to prevent sloughing of excavation slopes and walls, boils, uplift and heave in the excavation and to eliminate interference with orderly progress of construction. French drains, sumps, ditches or trenches will not be permitted within 900 mm of the foundation of any structure, except with specific written approval, and after specific contractual provisions for restoration of the foundation area have been made. Control measures shall be taken by the time the excavation reaches the water level in order to maintain the integrity of the in situ material. While the excavation is open, the water level shall be maintained continuously, at least 1 meters below the working level.

3.5 SHORING

Shoring, including sheet piling, shall be furnished and installed as necessary to protect workmen, banks, adjacent paving, structures, and utilities. Shoring, bracing, and sheeting shall be removed as excavations are backfilled, in a manner to prevent caving.

3.6 CLASSIFICATION OF EXCAVATION

All excavation will be considered "unclassified excavation" regardless of the nature of material encountered including hard and compact materials such as cemented gravel, glacial till, and relatively soft or disintegrated rock that can be removed with conventional equipment. If material claimed as rock is encountered on the site, it shall not be excavated until the material has been cross-sectioned by the Contractor and the limits of removal approved by the Contracting officer.

3.7 BLASTING

Blasting will not be permitted on this project.

3.8 UTILITY AND DRAIN TRENCHES

Trenches for underground utilities systems and drain lines shall be excavated to the required alignments and depths. The bottoms of trenches shall be graded to secure the required slope and shall be tamped if necessary to provide a firm pipe bed. Recesses shall be excavated to accommodate bells and joints so that pipe will be uniformly supported for the entire length. Rock, where encountered, shall be excavated to a depth of at least 150 mm below the bottom of the pipe, and the overdepth shall be backfilled with satisfactory material placed and compacted in conformance with paragraph FILLING AND BACKFILLING.

3.9 BORROW

Where satisfactory materials are not available in sufficient quantity from required excavations, approved materials shall be obtained as specified in Section 02300 EARTHWORK.

3.10 EXCAVATED MATERIALS

Satisfactory excavated material required for fill or backfill shall be placed in the proper section of the permanent work required under this section or shall be separately stockpiled if it cannot be readily placed. Satisfactory material in excess of that required for the permanent work and all unsatisfactory material shall be disposed of as specified in Section 02300 EARTHWORK.

3.11 FINAL GRADE OF SURFACES TO SUPPORT CONCRETE

Excavation to final grade shall not be made until just before concrete is to be placed.

3.12 SUBGRADE PREPARATION

Unsatisfactory material in surfaces to receive fill or in excavated areas shall be removed and replaced with satisfactory materials as directed by the Contracting Officer. The surface shall not be scarified prior to fill placement. Excavated sloped surfaces steeper than 1 vertical to 1 horizontal are anticipated for excavation in the clay. Excavated slopes on the order of 1 vertical to 1.5 horizontal are anticipated in dewatered sand excavations. Care should be taken not to allow sand to flow into the excavation. Material shall not be placed on surfaces that are muddy, frozen, or contain frost. Compaction shall be accomplished by sheepsfoot rollers, pneumatic-tired rollers, steel-wheeled rollers, or other approved equipment well suited to the soil being compacted. Material shall be moistened or aerated as necessary to plus or minus 2% percent of optimum moisture to provide the moisture content that will readily facilitate obtaining the specified compaction with the equipment used. Minimum subgrade density shall be as specified in paragraph FILLING AND BACKFILLING.

3.13 FILLING AND BACKFILLING

Satisfactory materials shall be used in bringing fills and backfills to the lines and grades indicated and for replacing unsatisfactory materials. Satisfactory materials shall be placed in horizontal layers not exceeding 200 mm in loose thickness, or 150 mm when hand-operated compactors are used. After placing, each layer shall be plowed, disked, or otherwise broken up, moistened or aerated as necessary, thoroughly mixed and compacted as specified. Backfilling shall not begin until construction below finish grade has been approved, underground utilities systems have been inspected, tested and approved, forms removed, and the excavation cleaned of trash and debris. Backfill shall be brought to indicated finish grade and shall include backfill for outside grease interceptors and underground fuel tanks. Backfill shall not be placed in wet or frozen areas. Where pipe is coated or wrapped for protection against corrosion, the backfill material up to an elevation 600 mm above sewer lines and 300 mm above other utility lines shall be free from stones larger than 25 mm in any dimension. Heavy equipment for spreading and compacting backfill shall not be operated closer to foundation or retaining walls than a distance equal to the height of backfill above the top of footing; the area remaining shall be compacted in layers not more than 100 mm in compacted thickness with power-driven hand tampers suitable for the material being compacted. Backfill shall be placed carefully around pipes or tanks to

avoid damage to coatings, wrappings, or tanks. Backfill shall not be placed against foundation walls prior to 7 days after completion of the walls. As far as practicable, backfill shall be brought up evenly on each side of the wall and sloped to drain away from the wall. Each layer of fill and backfill shall be compacted to not less than the minimum densities as indicated in Table 1 below when compared with the maximum dry density as determined by ASTM D-1557.

Table 1

Fill to Support	Minimum Compaction
Foundations	95%
Concrete Slabs	90%
Exterior Walls Backfill	88%
Landscaping	85%

Approved compacted subgrades that are disturbed by the Contractor's operations or adverse weather shall be scarified and compacted as specified herein before to the required density prior to further construction thereon. Recompaction over underground utilities and heating lines shall be by hand tamping.

3.14 TESTING

Testing shall be the responsibility of the Contractor and shall be performed at no additional cost to the Government. Testing shall be performed by an approved commercial testing laboratory or may be performed by the Contractor subject to approval. Field in-place density shall be determined in accordance with ASTM D 1556 or ASTM D 2922. When ASTM D 2922 is used, the calibration curves shall be checked and adjusted if necessary by the procedure described in ASTM D 2922, paragraph ADJUSTING CALIBRATION CURVE. ASTM D 2922 results in a wet unit weight of soil and when using this method ASTM D 3017 shall be used to determine the moisture content of the soil. The calibration curves furnished with the moisture gauges shall also be checked along with density calibration checks as described in ASTM D 3017. The calibration checks of both the density and moisture gauges shall be made at the beginning of a job on each different type of material encountered and at intervals as directed by the Contracting Officer. ASTM D 2937 shall be used only for soft, fine-grained, cohesive soils. The following number of tests, if performed at the appropriate time, shall be the minimum acceptable for each type operation.

3.14.1 In-Place Densities

In-place density and moisture content test results shall be included with the Contractor's daily construction quality control reports.

3.14.1.1 In-Place Density of Subgrades

One test per 209 square meters or fraction thereof.

3.14.1.2 In-Place Density of Fills and Backfills

One test per 167 square meters or fraction thereof of each lift for fill or backfill areas compacted by other than hand or hand-operated machines. The density for each lift of fill or backfill materials for trenches, pits, building perimeters or other structures which are compacted with hand or hand-operated machines shall be tested as follows: One test per each area

less than 166 square meters or one test for each 30 linear meters of long narrow fills but no less than one test. If ASTM D 2922 is used, in-place densities shall be checked by ASTM D 1556 as follows: One check per lift for each 30 linear meters of long narrow fills, and a minimum of 1 check per lift for other fill and backfill areas.

3.14.2 Moisture Content

In the stockpile, excavation or borrow areas, a minimum of two tests per day per type of material or source of materials being placed is required during stable weather conditions. During unstable weather, tests shall be made as dictated by local conditions and approved moisture content shall be tested in accordance with ASTM D 2216.

3.14.3 Optimum Moisture and Laboratory Maximum Density

Tests shall be made for each type material or source of material, including borrow material to determine the optimum moisture and laboratory maximum density values. One representative test per 150 cubic meters of fill and backfill, or when any change in material occurs which may affect the optimum moisture content or laboratory maximum density will be made.

3.15 CAPILLARY WATER BARRIER

Capillary water barrier under concrete floor and area-way slabs on grade shall be placed directly on the subgrade and shall be compacted with a minimum of two passes of a hand-operated plate-type vibratory compactor.

3.16 GRADING

Areas within 1.5 m outside of each building and structure line shall be constructed true-to-grade, shaped to drain, and shall be maintained free of trash and debris until final inspection has been completed and the work has been accepted.

3.17 SPREADING TOPSOIL

Areas outside the building lines from which topsoil has been removed shall be topsoiled. The surface shall be free of materials that would hinder planting or maintenance operations. The subgrade shall be pulverized to a depth of 50 mm by disking or plowing for the bonding of topsoil with the subsoil. Topsoil shall then be uniformly spread, graded, and compacted to the thickness, elevations, slopes shown, and left free of surface irregularities. Topsoil shall be compacted by one pass of a cultipacker, roller, or other approved equipment weighing 1.46kN/m to 2.34 kN/m of roller. Topsoil shall not be placed when the subgrade is frozen, excessively wet, extremely dry, or in a condition otherwise detrimental to seeding, planting, or proper grading.

3.18 PROTECTION

Settlement or washing that occurs in graded, topsoiled, or backfilled areas prior to acceptance of the work, shall be repaired and grades reestablished to the required elevations and slopes.

-- End of Section --

SECTION TABLE OF CONTENTS

DIVISION 02 - SITE WORK

SECTION 02316

EXCAVATION, TRENCHING, AND BACKFILLING FOR UTILITIES SYSTEMS

PART 1 GENERAL

1.1 REFERENCES
1.2 DEGREE OF COMPACTION
1.3 [Enter Appropriate Subpart Title Here]

WARNING: Text in tags exceeds the maximum length of 300 characters

2.1 PLASTIC MARKING TAPE

PART 3 EXECUTION

3.1 EXCAVATION
3.1.1 Trench Excavation Requirements
3.1.1.1 Bottom Preparation
3.1.1.2 Removal of Unyielding Material
3.1.1.3 Removal of Unstable Material
3.1.1.4 Excavation for Appurtenances
3.1.1.5 Jacking, Boring, and Tunneling
3.1.2 Stockpiles
3.2 BACKFILLING AND COMPACTION
3.2.1 Trench Backfill
3.2.1.1 Replacement of Unyielding Material
3.2.1.2 Replacement of Unstable Material
3.2.1.3 Bedding and Initial Backfill
3.2.1.4 Final Backfill
3.2.2 Backfill for Appurtenances
3.3 SPECIAL REQUIREMENTS
3.3.1 Gas Distribution
3.3.2 Water Lines
3.3.3 [Enter Appropriate Subpart Title Here]
3.3.4 Electrical Distribution System
3.3.5 Plastic Marking Tape
3.4 TESTING
3.4.1 Testing Facilities
3.4.2 Testing of Backfill Materials
3.4.3 Field Density Tests
3.4.4 Displacement of Sewers

-- End of Section Table of Contents --

SECTION 02316

EXCAVATION, TRENCHING, AND BACKFILLING FOR UTILITIES SYSTEMS

PART 1 GENERAL

1.1 REFERENCES

The publications listed below form a part of this specification to the extent referenced. The publications are referred to in the text by basic designation only.

AMERICAN SOCIETY FOR TESTING AND MATERIALS (ASTM)

ASTM D 1556	(1990; R 1996) Density and Unit Weight of Soil in Place by the Sand-Cone Method
ASTM D 1557	(1991) Laboratory Compaction Characteristics of Soil Using Modified Effort (56,000 ft-lbf/cu. ft. (2,700 kN-m/cu. m.))
ASTM D 2922	(1996) Density of Soil and Soil-Aggregate in Place by Nuclear Methods (Shallow Depth)
ASTM D 3017	(1996) Water Content of Soil and Rock in Place by Nuclear Methods (Shallow Depth)

1.2 DEGREE OF COMPACTION

Degree of compaction shall be expressed as a percentage of the maximum density obtained by the test procedure presented in ASTM D 1557.

1.3 [Enter Appropriate Subpart Title Here]1.3 SUBMITTALS

Government approval is required for submittals with a "GA" designation; submittals having an "FIO" designation are for information only. The following shall be submitted in accordance with Section 01330 SUBMITTAL PROCEDURES:

1. Field Density Tests; GA
2. Testing and Backfill Materials; GA

Copies of all laboratory and field tests reports must be provided to the Contracting Officer within 24 hours of the completion of the test.

PART TWO PRODUCTS

2.1. MATERIALS

2.1.1. Satisfactory Materials

Satisfactory materials include materials classified in ASTM D 2487 as GW, GP, or SW. GM, GC, SM, and SC, or combinations of these soils such as SW-SM,

etc... may be used if located above the water table and containing less than 35% passing the 0.075 mm sieve and having a liquid limit (LL) of less than 30% and having a maximum particle size of 100 mm. All soil shall be free of trash, debris, roots or other organic matter, or stones larger than 75 mm in any dimension.

2.1.2. Unsatisfactory Materials

Materials which do not comply with the requirements for satisfactory materials are unsatisfactory. Unsatisfactory materials also include man-made fills, trash, refuse, backfills from previous construction, and material classified as satisfactory which contains roots or other organic matter or frozen material. The Contracting Officer shall be notified of any contaminated materials.

2.1.3. Unstable Material

Unstable material shall consist of materials too wet to properly support the utility pipe, conduit, or appurtenant structure.

Soil on the site near the surface has a high amount of clay with high moisture content. This soil can become difficult to work with if low ground pressure equipment is not used. Increased difficulties can be expected during periods of wet weather, particularly during the spring runoff. Subsurface water level fluctuations may occur over time due to seasonal and irrigation effects. Generally, the water level is highest in the spring and early summer, and lowest in the fall and winter months. If excavations extend down near the subsurface water level, care should be taken to dewater the excavations. All excavation and backfill work shall be accomplished during the dry season if possible.

2.1.4. Select Granular Material

Select granular material shall consist of well-graded sand, gravel, crushed gravel, crushed stone or crushed slag composed of hard, tough and durable particles, and shall contain not more than 10% by weight of material passing a 0.075 mm sieve and no less than 95% by weight passing the 25 mm sieve. The maximum allowable aggregate size shal be 75 mm or the maximum size recommended by the pipe manufacturer, whichever is smaller.

2.1.5. Initial Backfill Material

Initial backfill material shall consist of select granular material or satisfactory material free from rocks 75 mm or larger in any dimension or as recommended by the pipe manufacturer, whichever is smaller. When the pipe is coated or wrapped for corrosion protection, the initial backfill material shall be free of stones larger than 50 mm in any dimension or as recommended by the pipe manufacturer, whichever is smaller.

2.1 PLASTIC MARKING TAPE

Plastic marking tape shall be acid and alkali-resistant polyethylene film, wide with minimum thickness of Tape shall have a minimum strength of lengthwise and crosswise. The tape shall be manufactured with integral wires, foil backing or other means to enable detection by a metal detector when the tape is buried. The tape shall be of a type specifically manufactured for marking and locating underground utilities. The metallic core of the tape shall be encased in a protective jacket or provided with

other means to protect it from corrosion. Tape color shall be as specified in TABLE 1 and shall bear the continuous printed inscription: "CAUTION: BURIED INSTALLATION BELOW", or other inscription approved by the Contracting Officer describing the specific utility.

TABLE 1. Tape Color

Red:	Electric
Yellow:	Gas, Oil, Dangerous Materials
Orange:	Telephone, Telegraph, Television, Police, and Fire Communications
Blue:	Water Systems
Green:	Sewer Systems

PART 3 EXECUTION

3.1 EXCAVATION

Excavation shall be performed to the lines and grades indicated. During excavation, material satisfactory for backfilling shall be stockpiled in an orderly manner at a distance from the banks of the trench equal to 1/2 the depth of the excavation, but in no instance closer than 600 mm. Excavated material not required or not satisfactory for backfill shall be removed from the site. Grading shall be done as may be necessary to prevent surface water from flowing into the excavation, and any water accumulating shall be removed to maintain the stability of the bottom and sides of the excavation. Unauthorized overexcavation shall be backfilled in accordance with paragraph BACKFILLING AND COMPACTION at no additional cost to the Government.

3.1.1 Trench Excavation Requirements

The trench shall be excavated as recommended by the manufacturer of the pipe to be installed. Trench walls below the top of the pipe shall be sloped, or made vertical, and of such width as recommended in the manufacturer's installation manual. Where no manufacturer's installation manual is available, trench walls shall be made vertical. Trench walls more than 2 meters high shall be shored, cut back to a stable slope, or provided with equivalent means of protection for employees who may be exposed to moving ground or cave in. Trench walls which are cut back shall be excavated to at least the angle of repose of the soil. Special attention shall be given to slopes which may be adversely affected by weather or moisture content. The trench width below the top of pipe shall not exceed plus pipe outside diameter (O.D.) for pipes of less than inside diameter and shall not exceed plus pipe outside diameter for sizes larger than inside diameter. Where recommended trench widths are exceeded, redesign, stronger pipe, or special installation procedures shall be utilized by the Contractor. The cost of redesign, stronger pipe, or special installation procedures shall be borne by the Contractor without any additional cost to the Government.

3.1.1.1 Bottom Preparation

The bottoms of trenches shall be accurately graded to provide uniform bearing and support for the bottom quadrant of each section of the pipe. Bell holes shall be excavated to the necessary size at each joint or coupling to eliminate point bearing. Stones of 75 mm or greater in any dimension, or as recommended by the pipe manufacturer, whichever is smaller, shall be removed to avoid point bearing.

3.1.1.2 Removal of Unyielding Material

Where unyielding material is encountered in the bottom of the trench, such material shall be removed 100 below the required grade and replaced with suitable materials as provided in paragraph BACKFILLING AND COMPACTION.

3.1.1.3 Removal of Unstable Material

Where unstable material is encountered in the bottom of the trench, such material shall be removed to the depth directed and replaced to the proper grade with select granular material as provided in paragraph BACKFILLING AND COMPACTION. When removal of unstable material is required due to the Contractor's fault or neglect in performing the work, the resulting material shall be excavated and replaced by the Contractor without additional cost to the Government.

3.1.1.4 Excavation for Appurtenances

Excavation for manholes, catch-basins, inlets, or similar structures shall be sufficient to leave at least 300 mm clear between the outer structure surfaces and the face of the excavation or support members. Removal of unstable material shall be as specified above. When concrete or masonry is to be placed in an excavated area, special care shall be taken not to disturb the bottom of the excavation. Excavation to the final grade level shall not be made until just before the concrete or masonry is to be placed.

3.1.1.5 Jacking, Boring, and Tunneling

Unless otherwise indicated, excavation shall be by open cut except that sections of a trench may be jacked, bored, or tunneled if, in the opinion of the Contracting Officer, the pipe, cable, or duct can be safely and properly installed and backfill can be properly compacted in such sections.

3.1.2 Stockpiles

Stockpiles of satisfactory shall be placed and graded as specified. Stockpiles shall be kept in a neat and well drained condition, giving due consideration to drainage at all times. The ground surface at stockpile locations shall be cleared, grubbed, and sealed by rubber-tired equipment, excavated satisfactory and unsatisfactory materials shall be separately stockpiled. Stockpiles of satisfactory materials shall be protected from contamination which may destroy the quality and fitness of the stockpiled material. If the Contractor fails to protect the stockpiles, and any material becomes unsatisfactory, such material shall be removed and replaced with satisfactory material from approved sources at no additional cost to the Government. Locations of stockpiles of satisfactory materials shall be subject to prior approval of the Contracting Officer.

3.2 BACKFILLING AND COMPACTION

Backfill material shall consist of satisfactory material, select granular material, or initial backfill material as required. Backfill shall be placed in layers not exceeding 150 mm loose thickness for compaction by hand operated machine compactors, and 200 mm loose thickness for other than hand operated machines, unless otherwise specified. Each layer shall be compacted to at least 95 percent maximum density, unless otherwise specified.

3.2.1 Trench Backfill

Trenches shall be backfilled to the grade shown. The trench shall be backfilled to 0.6 meters above the top of pipe prior to performing the required pressure tests. The joints and couplings shall be left uncovered during the pressure test. The trench shall not be backfilled until all specified tests are performed.

3.2.1.1 Replacement of Unyielding Material

Unyielding material removed from the bottom of the trench shall be replaced with select granular material or initial backfill material.

3.2.1.2 Replacement of Unstable Material

Unstable material removed from the bottom of the trench or excavation shall be replaced with select granular material placed in layers not exceeding loose thickness.

3.2.1.3 Bedding and Initial Backfill

Bedding shall be of the type and thickness shown. Initial backfill material shall be placed and compacted with approved tampers to a height of at least 300 mm above the utility pipe or conduit. The backfill shall be brought up evenly on both sides of the pipe for the full length of the pipe. Care shall be taken to ensure thorough compaction of the fill under the haunches of the pipe.

3.2.1.4 Final Backfill

The remainder of the trench, except for special materials for roadways and parking lots shall be filled with satisfactory material. Backfill material shall be placed and compacted as follows:

a. Roadwaysand parking lots: Backfill shall be placed up to the elevation at which the requirements in Section 02300 EARTHWORK control. Water flooding or jetting methods of compaction will not be permitted.

b. Sidewalks, Turfed or Seeded Areas and Miscellaneous Areas: Backfill shall be deposited in layers of a maximum of loose thickness, and compacted to 95 percent maximum density. Compaction by water flooding or jetting will not be permitted. This requirement shall also apply to all other areas not specifically designated above.

3.2.2 Backfill for Appurtenances

After the manhole, catchbasin, inlet, or similar structure has been constructed and the concrete has been allowed to cure for a minimum of 3 days, backfill shall be placed in such a manner that the structure will not be damaged by the shock of falling earth. The backfill material shall be deposited and compacted as specified for final backfill, and shall be brought up evenly on all sides of the structure to prevent eccentric loading and excessive stress.

3.3 SPECIAL REQUIREMENTS

Special requirements for both excavation and backfill relating to the

specific utilities are as follows:

3.3.1 Gas Distribution

Trenches shall be excavated to a depth that will provide not less than of cover. Trenches shall be graded as specified for pipe-laying requirements in Section 02256 GAS DISTRIBUTION SYSTEM.

3.3.2 Water Lines

Trenches shall be of a depth to provide a minimum cover of 2.5 meters from the existing ground surface, or from the indicated finished grade, whichever is lower, to the top of the pipe. The maximum depth from the existing ground surface (or from the indicated finished grade, whichever is lower) shall be 3.0 meters. If, due to site construction there is less than the designated minimum cover, the Contractor shall provide additional protection to withstand fronts and external loads.

3.3.3 [Enter Appropriate Subpart Title Here]

3.3.3. Sanitary Sewer System

Trenches shall be of a depth to provide a minimum cover of 1.0 meters for laterals and 1.2 meters where subjected to light construction equipment loads.

3.3.4 Electrical Distribution System

Direct burial cable and conduit or duct line shall have a minimum cover of 600 mm from the finished grade, unless otherwise indicated. Special trenching requirements for direct-burial electrical cables and conduits are specified in Section 16375 ELECTRICAL DISTRIBUTION SYSTEM, UNDERGROUND.

3.3.5 Plastic Marking Tape

Warning tapes shall be installed directly above the pipe, at a depth of 450 mm below finished grade unless otherwise shown. The tape shall not be less than 150 mm wide and not less than 0.102 mm thick and shall read; "CAUTION: BURIED INSTALLATION BELOW" in the color identified in Table 1.

3.4 TESTING

Testing shall be the responsibility of the Contractor and shall be performed at no additional cost to the Government. All testing sampling shall be performed according to the Construction Control Manual except when specified otherwise.

3.4.1 Testing Facilities

Tests shall be performed by an approved commercial testing laboratory or may be tested by facilities furnished by the Contractor. No work requiring testing will be permitted until the facilities have been inspected and approved by the Contracting Officer. The first inspection shall be at the expense of the Government. Cost incurred for any subsequent inspection required because of failure of the first inspection will be charged to the Contractor.

3.4.2 Testing of Backfill Materials

Classification of backfill materials shall be determined in accordance with particle size analysis of soils ASTM D 422 and the moisture-density relations of soils shall be determined in accordance with ASTM D 1557. A

minimum of one particle size analysis and one moisture-density relation test shall be performed on each different type of material used for bedding and backfill.

Table 2. Lot Size for Trench Backfill Operations

Subgrade:	One test per day.
Common Fill:	One test per lift per 60 m of trench
Select Fill:	One test per lift per 60 m of trench One test per 2.3 sq. meters of footing
Flowable Fill:	One test per 38 cubic meters of fill

3.4.3 Field Density Tests

Tests shall be performed in sufficient numbers to ensure that the specified density is being obtained. A minimum of one field density test per lift of backfill for every 60 meters of installation shall be performed. One moisture density relationship shall be determined for every 1500 cubic meters of material used. Field in-place density shall be determined in accordance with ASTM D 1556ASTM D 2922. When ASTM D 2922 is used, the calibration curves shall be checked and adjusted using the sand cone method as described in paragraph Calibration of the ASTM publication. ASTM D 2922 results in a wet unit weight of soil and when using this method, ASTM D 3017 shall be used to determine the moisture content of the soil. The calibration curves furnished with the moisture gauges shall be checked along with density calibration checks as described in ASTM D 3017. The calibration checks of both the density and moisture gauges shall be made at the beginning of a job, on each different type of material encountered, at intervals as directed by the Contracting Officer. Copies of calibration curves, results of calibration tests, and field and laboratory density tests shall be furnished to the Contracting Officer. Trenches improperly compacted shall be reopened to the depth directed, then refilled and compacted to the density specified at no additional cost to the Government.

3.4.4 Displacement of Sewers

After other required tests have been performed and the trench backfill compacted to 2 meters above the top of the pipe, the pipe shall be inspected to determine whether significant displacement has occurred. This inspection shall be conducted in the presence of the Contracting Officer. Pipe shall be inspected by shining a light or laser between manholes or manhole locations, or by the use of television cameras passed through the pipe. If, in the judgement of the Contracting Officer, the interior of the pipe shows poor alignment or any other defects that would cause improper functioning of the system, the defects shall be remedied as directed at no additional cost to the Government.

-- End of Section --

SECTION TABLE OF CONTENTS

DIVISION 02 - SITE WORK

SECTION 02510

WATER DISTRIBUTION SYSTEM

PART 1 GENERAL

1.1 REFERENCES
1.2 PIPING
1.2.1 Distribution Lines 80 mm or Larger
1.2.2 Sprinkler Supply Lines
1.2.3 Potable Water Lines
1.2.4 Excavation, Trenching, and Backfilling
1.3 SUBMITTALS
1.4 HANDLING

PART 2 PRODUCTS

2.1 PIPE
2.1.1 Ductile-Iron Pipe
2.2 FITTINGS AND SPECIALS
2.2.1 Ductile-Iron Pipe System
2.3 JOINTS
2.3.1 Ductile-Iron Pipe Jointing
2.4 VALVES
2.4.1 Check Valves
2.4.2 Gate Valves
2.5 VALVE BOXES
2.6 MISCELLANEOUS ITEMS
2.6.1 Service Clamps
2.6.2 Disinfection
2.6.3 Meters
2.6.3.1 Propeller Type
2.6.4 Meter Boxes

PART 3 EXECUTION

3.1 INSTALLATION
3.1.1 Cutting of Pipe
3.1.2 Adjacent Facilities
3.1.2.1 Sewer Lines
3.1.2.2 Water Lines
3.1.3 Joint Deflection
3.1.3.1 Allowable for Ductile-Iron Pipe
3.1.4 Placing and Laying
3.1.4.1 Piping Connections
3.1.4.2 Penetrations
3.1.5 Jointing
3.1.5.1 Ductile-Iron Pipe Requirements
3.1.6 Setting of Meters, Valves and Valve Boxes
3.1.6.1 Location of Meters
3.1.6.2 Location of Valves
3.1.7 Thrust Restraint

3.1.7.1 Thrust Blocks
3.1.7.2 Restrained Joints
3.2 HYDROSTATIC TESTS
3.2.1 Pressure Test
3.2.2 Leakage Test
3.2.3 Time for Making Test
3.2.4 Concurrent Hydrostatic Tests
3.3 DISINFECTION
3.3.1 Bacteriological Disinfection
3.3.2 Lead Residual
3.4 CLEANUP

-- End of Section Table of Contents --

SECTION 02510

WATER DISTRIBUTION SYSTEM

PART 1 GENERAL

1.1 REFERENCES

The publications listed below form a part of this specification to the extent referenced. The publications are referred to in the text by basic designation only.

AMERICAN WATER WORKS ASSOCIATION (AWWA)

AWWA B300	(1992) Hypochlorites
AWWA B301	(1992) Liquid Chlorine
AWWA ANSI/AWWA C104/A21.4	(1995) Cement-Mortar Lining for Ductile-Iron Pipe and Fittings for Water
AWWA ANSI/AWWA C110/A21.10	(1993) Ductile-Iron and Gray-Iron Fittings, 3 In. Through 48 In. (75# mm through 1200# mm), for Water and Other Liquids
AWWA ANSI/AWWA C111/A21.11	(1995) Rubber-Gasket Joints for Ductile-Iron Pressure Pipe and Fittings
AWWA ANSI/AWWA C115/A21.15	(1994) Flanged Ductile-Iron Pipe With Ductile-Iron or Gray-Iron Threaded Flanges
AWWA ANSI/AWWA C151/A21.51	(1996) Ductile-Iron Pipe, Centrifugally Cast, for Water or Other Liquids
AWWA ANSI/AWWA C153/A21.53	(1994; Errata Nov 1996) Ductile-Iron Compact Fittings, 3 In. Through 24 In. (76 mm through 610 mm) and 54 In. through 64 In. (1,400 mm through 1,600 mm) for Water Service Liquids
AWWA C509	(1994) Resilient-Seated Gate Valves for Water Supply Service
AWWA C600	(1993) Installation of Ductile-Iron Water Mains and Their Appurtenances
AWWA C606	(1987) Grooved and Shouldered Joints
AWWA C651	(1992) Disinfecting Water Mains
AWWA ANSI/AWWA C703	(1996) Cold-Water Meters - Fire Service Type

AWWA ANSI/AWWA C704	(1992) Propeller-Type Meters Waterworks Applications
AWWA C706	(1996) Direct-Reading, Remote-Registration Systems for Cold-Water Meters

DUCTILE IRON PIPE RESEARCH ASSOCIATION (DIPRA)

DIPRA-01	(1997) Thrust Restraint Design for Ductile Iron Pipe

NATIONAL FIRE PROTECTION ASSOCIATION (NFPA)

NFPA 24	(1995) Installation of Private Fire Service Mains and Their Appurtenances

NSF INTERNATIONAL (NSF)

NSF ANSI/NSF 61	(1997a) Drinking Water System Components - Health Effects (Sections 1-9)

1.2 PIPING

This section covers water distribution lines, and connections to building service at a point approximately 1.5 m outside buildings and structures to which service is required. The Contractor shall have a copy of the manufacturer's recommendations for each material or procedure to be utilized available at the construction site at all times.

1.2.1 Distribution Lines 80 mm or Larger

Piping for water distribution lines or larger shall be ductile iron pipe unless otherwise shown or specified.

1.2.2 Sprinkler Supply Lines

Piping for water lines supplying sprinkler systems for building fire protection shall conform to NFPA 24 from the point of connection with the water distribution system to the building 1.5 m line.

1.2.3 Potable Water Lines

Piping and components of potable water systems which come in contact with the potable water shall conform to NSF ANSI/NSF 61.

1.2.4 Excavation, Trenching, and Backfilling

Excavation, trenching, and backfilling shall be in accordance with the applicable provisions of Section 02316 EXCAVATION, TRENCHING, AND BACKFILLING FOR UTILITIES SYSTEMS, except as modified herein.

1.3 SUBMITTALS

Government approval is required for submittals with a "GA" designation; submittals having an "FIO" designation are for information only. The following shall be submitted in accordance with Section 01330 SUBMITTAL

PROCEDURES:

SD-06 Instructions

Installation; GA.

The manufacturer's recommendations for each material or procedure to be utilized.

SD-08 Statements

Waste Water Disposal Method; GA

The method proposed for disposal of waste water from hydrostatic tests and disinfection, prior to performing hydrostatic tests.

Satisfactory InstallationGA

A statement signed by the principal officer of the contracting firm stating that the installation is satisfactory and in accordance with the contract drawings and specifications, and the manufacturer's prescribed procedures and techniques, upon completion of the project and before final acceptance.

SD-09 Reports

Bacteriological Disinfection; GA

Test results from commercial laboratory verifying disinfection.

SD-13 Certificates

Manufacturer's Representative; GA

Meters; GA

Manufacturer's certificate stating that each meter furnished has been tested for accuracy of registration and compliance with the accuracy and capacity requirements of the appropriate AWWA standard.

1.4 HANDLING

Pipe and accessories shall be handled to ensure delivery to the trench in sound, undamaged condition, including no injury to the pipe coating or lining. If the coating or lining of any pipe or fitting is damaged, the repair shall be made by the Contractor in a satisfactory manner, at no additional cost to the Government. No other pipe or material shall be placed inside a pipe or fitting after the coating has been applied. Pipe shall be carried into position and not dragged. Use of pinch bars and tongs for aligning or turning pipe will be permitted only on the bare ends of the pipe. The interior of pipe and accessories shall be thoroughly cleaned of foreign matter before being lowered into the trench and shall be kept clean during laying operations by plugging or other approved method. Before installation, the pipe shall be inspected for defects. Material found to be defective before or after laying shall be replaced with sound material without additional expense to the Government. Rubber gaskets that are not to be installed immediately shall be stored in a cool and dark place.

PART 2 PRODUCTS

2.1 PIPE

Pipe shall conform to the respective specifications and other requirements specified below.

2.1.1 Ductile-Iron Pipe

Ductile-iron pipe shall conform to AWWA ANSI/AWWA C151/A21.51, working pressure not less than 1.03 MPa unless otherwise shown or specified. Pipe shall be cement-mortar lined in accordance with AWWA ANSI/AWWA C104/A21.4. Linings shall be standard. When installed underground, pipe shall be encased with 2 mm thick polyethylene in accordance with AWWA ANSI/AWWA C105/A21.5. Flanged ductile iron pipe with threaded flanges shall be in accordance with AWWA ANSI/AWWA C115/A21.15.

2.2 FITTINGS AND SPECIALS

2.2.1 Ductile-Iron Pipe System

Fittings and specials shall be suitable for 1.03 MPa pressure rating, unless otherwise specified. Fittings and specials for mechanical joint pipe shall conform to AWWA ANSI/AWWA C110/A21.10. Fittings and specials for use with push-on joint pipe shall conform to AWWA ANSI/AWWA C110/A21.10 and AWWA ANSI/AWWA C111/A21.11. Fittings and specials shall be cement-mortar lined (standard thickness) in accordance with AWWA ANSI/AWWA C104/A21.4. Ductile iron compact fittings shall conform to AWWA ANSI/AWWA C153/A21.53.

2.3 JOINTS

2.3.1 Ductile-Iron Pipe Jointing

a. Mechanical joints shall be of the stuffing box type and shall conform to AWWA ANSI/AWWA C111/A21.11.

b. Push-on joints shall conform to AWWA ANSI/AWWA C111/A21.11.

c. Rubber gaskets and lubricants shall conform to the applicable requirements of AWWA ANSI/AWWA C111/A21.11.

2.4 VALVES

2.4.1 Check Valves

Check valves shall be designed for a minimum working pressure of 1.03 MPa or as indicated. Valves shall have a clear waterway equal to the full nominal diameter of the valve. Valves shall open to permit flow when inlet pressure is greater than the discharge pressure, and shall close tightly to prevent return flow when discharge pressure exceeds inlet pressure. The size of the valve, working pressure, manufacturer's name, initials, or trademark shall be cast on the body of each valve. Valves 50 mm and larger shall be outside lever and weight type.

ba. Valves larger than 50 mm shall be iron body, bronze mounted, shall have flanged ends, and shall be the non-slam type. Flanges shall be the Class 125 type conforming to ASME B16.1.

2.4.2 Gate Valves

Gate valves shall be designed for a working pressure of not less than 1.03 MPa. Valve connections shall be as required for the piping in which they are installed. Valves shall have a clear waterway equal to the full nominal diameter of the valve, and shall be opened by turning counterclockwise. The operating nut or wheel shall have an arrow, cast in the metal, indicating the direction of opening.

a. Valves 80 mm and larger shall be iron body, bronze mounted, and shall conform to AWWA C500. Flanges shall not be buried. An approved pit shall be provided for all flanged connections.

b. Resilient-Seated Gate Valves: For valves 80 to 300 mm in size, resilient-seated gate valves shall conform to AWWA C509.

2.5 VALVE BOXES

Valve boxes shall be cast iron or concrete, except that concrete boxes may be installed only in locations not subjected to vehicular traffic. Cast-iron boxes shall be extension type with slide-type adjustment and with flared base. The minimum thickness of metal shall be 5 mm. Concrete boxes shall be the standard product of a manufacturer of precast concrete equipment. The word "WATER" shall be cast in the cover. The box length shall adapt, without full extension, to the depth of cover required over the pipe at the valve location.

2.6 MISCELLANEOUS ITEMS

2.6.1 Service Clamps

Service clamps shall have a pressure rating not less than that of the pipe to be connected and shall be either the single or double flattened strap type. Clamps shall have a galvanized malleable-iron body with cadmium plated straps and nuts. Clamps shall have a rubber gasket cemented to the body.

2.6.2 Disinfection

Chlorinating materials shall conform to the following:

Chlorine, Liquid: AWWA B301.

Hypochlorite, Calcium and Sodium: AWWA B300.

2.6.3 Meters

Meters shall be AWWA C704 Standard for Cold Water - Propeller Type

1. Cast iron bodies with 1.16 MPa working pressure flanged connections.
2. Built-in straightening vanes.
3. Working pressure of 1.03 MPa.
4. Polyethylene plastic propellers.

5. Stainless steel shaft with stainless steel ball bearings, lubricated by a single pressure fitting.
6. Accuracy plus or minus 2% of scale for velocities over 0.3 m/second.
7. Six digits reading in units indicated.

Meters of each of the various types furnished and installed shall be supplied by one manufacturer.

2.6.3.1 Propeller Type

Propeller type meters shall conform to AWWA ANSI/AWWA C704. Registers shall be straight-reading type, shall be open and shall read in U.S. gallons. Connections shall be suitable to the type of pipe and conditions encountered. Register type shall be a direct-reading remote register designed in accordance with AWWA C706. Meters shall comply with the accuracy and capacity requirements of AWWA ANSI/AWWA C703.

2.6.4 Meter Boxes

Meter boxes shall be of cast iron, concrete, or plastic. The boxes shall be of sufficient size to completely enclose the meter and shutoff valve or service stop. Meter boxes set in paved areas subject to vehicular traffic shall be cast iron, or concrete with cast iron lid and cast iron meter reader lid. Boxes set in sidewalks, not subject to vehicular traffic, shall be concrete with cast iron lid and cast iron meter reader lid. Plastic boxes and lids shall be used in unpaved areas or grass areas not subject to vehicular traffic. Box height shall extend from invert of the meter to final grade at the meter location. The lid shall have the word "WATER" cast in it.

PART 3 EXECUTION

3.1 INSTALLATION

3.1.1 Cutting of Pipe

Cutting of pipe shall be done in a neat and workmanlike manner without damage to the pipe. Unless otherwise recommended by the manufacturer and authorized by the Contracting Officer, cutting shall be done with an approved type mechanical cutter. Wheel cutter shall be used when practicable. Squeeze type mechanical cutters shall not be used for ductile iron.

3.1.2 Adjacent Facilities

3.1.2.1 Sewer Lines

Where the location of the water pipe is not clearly defined in dimensions on the drawings, the water pipe shall not be laid closer horizontally than 3 m from a sewer except where the bottom of the water pipe will be at least 300 mm above the top of the sewer pipe, in which case the water pipe shall not be laid closer horizontally than 1.8 m from the sewer. Where water lines cross under gravity-flow sewer lines, the sewer pipe, for a distance of at least 3 m each side of the crossing, shall be fully encased in concrete or shall be made of pressure pipe with no joint located within 900 mm horizontally of the crossing. Water lines shall in all cases cross above sewage force mains or inverted siphons and shall be not less than 600 mm above the sewer main. Joints in the sewer main, closer horizontally

than 900 mm to the crossing, shall be encased in concrete.

3.1.2.2 Water Lines

Water lines shall not be laid in the same trench with sewer lines, gas lines, fuel lines, or electric wiring.

3.1.3 Joint Deflection

3.1.3.1 Allowable for Ductile-Iron Pipe

The maximum allowable deflection shall be as given in AWWA C600. If the alignment requires deflection in excess of the above limitations, special bends or a sufficient number of shorter lengths of pipe shall be furnished to provide angular deflections within the limit set forth.

3.1.4 Placing and Laying

Pipe and accessories shall be carefully lowered into the trench by means of derrick, ropes, belt slings, or other authorized equipment. Water-line materials shall not be dropped or dumped into the trench. Abrasion of the pipe coating shall be avoided. Except where necessary in making connections with other lines or as authorized by the Contracting Officer, pipe shall be laid with the bells facing in the direction of laying. The full length of each section of pipe shall rest solidly upon the pipe bed, with recesses excavated to accommodate bells, couplings, and joints. Pipe that has the grade or joint disturbed after laying shall be taken up and relaid. Pipe shall not be laid in water or when trench conditions are unsuitable for the work. Water shall be kept out of the trench until joints are complete. When work is not in progress, open ends of pipe, fittings, and valves shall be securely closed so that no trench water, earth, or other substance will enter the pipes or fittings. Where any part of the coating or lining is damaged, the repair shall be made by and at the Contractor's expense in a satisfactory manner. Pipe ends left for future connections shall be valved, plugged, or capped, and anchored, as shown.

3.1.4.1 Piping Connections

Where connections are made between new work and existing mains, the connections shall be made by using specials and fittings to suit the actual conditions. When made under pressure, these connections shall be installed using standard methods as approved by the Contracting Officer. Connections to existing asbestos-cement pipe shall be made in accordance with ACPPA-01.

3.1.4.2 Penetrations

Pipe passing through walls of valve pits and structures shall be provided with ductile-iron or Schedule 40 steel wall sleeves. Annular space between walls and sleeves shall be filled with rich cement mortar. Annular space between pipe and sleeves shall be filled with mastic.

3.1.5 Jointing

3.1.5.1 Ductile-Iron Pipe Requirements

Mechanical and push-on type joints shall be installed in accordance with AWWA C600 for buried lines or AWWA C606 for grooved and shouldered pipe above ground or in pits.

3.1.6 Setting of Meters, Valves and Valve Boxes

3.1.6.1 Location of Meters

Meters and meter boxes shall be installed at the locations shown on the drawings or at locations as directed bythe COntracting Officer. The meters shall be centered in the boxes to allow for reading and ease of removal or maintenance.

3.1.6.2 Location of Valves

After delivery, valves, including those in hydrants, shall be drained to prevent freezing and shall have the interiors cleaned of all foreign matter before installation. Stuffing boxes shall be tightened and hydrants and valves shall be fully opened and fully closed to ensure that all parts are in working condition. Valves and valve boxes shall be installed as directed by the Contracting Officer, and shall be set plumb. Valve boxes shall be centered on the valves. Boxes shall be installed over each outside gate valve unless otherwise shown. Where feasible, valves shall be located outside the area of roads and streets. Earth fill shall be tamped around each valve box or pit to a distance of 1.2 m on all sides of the box, or the undisturbed trench face if less than 1.2 m.

3.1.7 Thrust Restraint

Plugs, caps, tees and bends deflecting 11.25 degrees or more, either vertically or horizontally, on waterlines 100 mm in diameter or larger, and fire hydrants shall be provided with thrust restraints. Valves shall be securely anchored or shall be provided with thrust restraints to prevent movement. Thrust restraints shall be either thrust blocks or, for ductile-iron pipes, restrained joints.

3.1.7.1 Thrust Blocks

Thrust blocking shall be concrete of a mix not leaner than: 1 cement, 2-1/2 sand, 5 gravel; and having a compressive strength of not less than 14 MPa after 28 days. Blocking shall be placed between solid ground and the hydrant or fitting to be anchored. Unless otherwise indicated or directed, the base and thrust bearing sides of thrust blocks shall be poured directly against undisturbed earth. The sides of thrust blocks not subject to thrust may be poured against forms. The area of bearing shall be as shown or as directed. Blocking shall be placed so that the fitting joints will be accessible for repair. Steel rods and clamps, protected by galvanizing or by coating with bituminous paint, shall be used to anchor vertical down bends into gravity thrust blocks.

3.1.7.2 Restrained Joints

For ductile-iron pipe, restrained joints shall be designed by the Contractor or the pipe manufacturer in accordance with DIPRA-01.

3.2 HYDROSTATIC TESTS

Where any section of a water line is provided with concrete thrust blocking for fittings or hydrants, the hydrostatic tests shall not be made until at

least 5 days after installation of the concrete thrust blocking, unless otherwise approved.

3.2.1 Pressure Test

After the pipe is laid, the joints completed, and the trench partially backfilled leaving the joints exposed for examination, the newly laid piping or any valved section of piping shall, unless otherwise specified, be subjected for 1 hour to a hydrostatic pressure test of 1.38 MPa Water supply lines designated on the drawings shall be subjected for 1 hour to a hydrostatic pressure test of 1.38 MPa. Each valve shall be opened and closed several times during the test. Exposed pipe, joints, fittings, hydrants, and valves shall be carefully examined during the partially open trench test. Joints showing visible leakage shall be replaced or remade as necessary. Cracked or defective pipe, joints, fittings, hydrants and valves discovered in consequence of this pressure test shall be removed and replaced with sound material, and the test shall be repeated until the test results are satisfactory. The requirement for the joints to remain exposed for the hydrostatic tests may be waived by the Contracting Officer when one or more of the following conditions is encountered:

a. Wet or unstable soil conditions in the trench.

b. Compliance would require maintaining barricades and walkways around and across an open trench in a heavily used area that would require continuous surveillance to assure safe conditions.

c. Maintaining the trench in an open condition would delay completion of the project.

The Contractor may request a waiver, setting forth in writing the reasons for the request and stating the alternative procedure proposed to comply with the required hydrostatic tests. Backfill placed prior to the tests shall be placed in accordance with the requirements of Section 02316 EXCAVATION, TRENCHING, AND BACKFILLING FOR UTILITIES SYSTEMS.

3.2.2 Leakage Test

Leakage test shall be conducted after the pressure tests have been satisfactorily completed. The duration of each leakage test shall be at least 2 hours, and during the test the water line shall be subjected to not less than 1.38 MPa pressure. Water supply lines designated on the drawings shall be subjected to a pressure equal to 1.38 MPa. Leakage is defined as the quantity of water to be supplied into the newly laid pipe, or any valved or approved section, necessary to maintain pressure within 34.5 kPa of the specified leakage test pressure after the pipe has been filled with water and the air expelled. Piping installation will not be accepted if leakage exceeds the allowable leakage which is determined by the following formula:

L = 0.0001351ND(P raised to 0.5 power)

L = Allowable leakage in gallons per hour
N = Number of joints in the length of pipeline tested
D = Nominal diameter of the pipe in inches
P = Average test pressure during the leakage test, in psi gauge

Should any test of pipe disclose leakage greater than that calculated by the above formula, the defective joints shall be located and repaired until

the leakage is within the specified allowance, without additional cost to the Government.

3.2.3 Time for Making Test

Except for joint material setting or where concrete thrust blocks necessitate a 5-day delay, pipelines jointed with rubber gaskets, mechanical or push-on joints, or couplings may be subjected to hydrostatic pressure, inspected, and tested for leakage at any time after partial completion of backfill. Cement-mortar lined pipe may be filled with water as recommended by the manufacturer before being subjected to the pressure test and subsequent leakage test.

3.2.4 Concurrent Hydrostatic Tests

The Contractor may elect to conduct the hydrostatic tests using either or both of the following procedures. Regardless of the sequence of tests employed, the results of pressure tests, leakage tests, and disinfection shall be as specified. Replacement, repair or retesting required shall be accomplished by the Contractor at no additional cost to the Government.

a. Pressure test and leakage test may be conducted concurrently.

b. Hydrostatic tests and disinfection may be conducted concurrently, using the water treated for disinfection to accomplish the hydrostatic tests. If water is lost when treated for disinfection and air is admitted to the unit being tested, or if any repair procedure results in contamination of the unit, disinfection shall be reaccomplished.

3.3 DISINFECTION

3.3.1 Bacteriological Disinfection

Before acceptance of potable water operation, each unit of completed waterline shall be disinfected as prescribed by AWWA C651.After pressure tests have been made, the unit to be disinfected shall be thoroughly flushed with water until all entrained dirt and mud have been removed before introducing the chlorinating material. The chlorinating material shall be either liquid chlorine, calcium hypochlorite, or sodium hypochlorite, conforming to paragraph MISCELLANEOUS ITEMS. The chlorinating material shall provide a dosage of not less than 50 ppm and shall be introduced into the water lines in an approved manner. The agent shall not be introduced into the line in a dry solid state. The treated water shall be retained in the pipe long enough to destroy all non-spore forming bacteria. Except where a shorter period is approved, the retention time shall be at least 24 hours and shall produce not less than 25 ppm of free chlorine residual throughout the line at the end of the retention period. Valves on the lines being disinfected shall be opened and closed several times during the contact period. The line shall then be flushed with clean water until the residual chlorine is reduced to less than 1.0 ppm. During the flushing period, each fire hydrant on the line shall be opened and closed several times. From several points in the unit, personnel from the Contractor's commercial laboratory shall take at least 3 water samples from different points, approved by the Contracting Officer, in proper sterilized containers and perform a bacterial examination in accordance with state approved methods. The commercial laboratory shall be certified by the state's approving authority for examination of potable water. The disinfection shall be repeated until tests indicate the absence

of pollution for at least 2 full days. The unit will not be accepted until satisfactory bacteriological results have been obtained.

3.3.2 Lead Residual

Following the bacteriological disinfection and testing, the system shall be flushed with a sufficient velocity of water and sufficient tests performed at each hot and cold water discharge point until no more than 15 ppb lead residuals remain in the system. All tests and samples shall be performed in accordance with state and, if applicable, Federal regulations. Samples for testing are to be collected after a 6 hour continuous period of no flushing, and will be considered first draw samples. The commercial laboratory shall be certified by the state's approving authority for examination of potable water. Lead residual test results shall be submitted to the Contracting Officer. The system will not be accepted until satisfactory bacteriological results and lead residual test results have been obtained. All flushing and testing for lead residuals, including all costs, are the responsibility of the Contractor.

3.4 CLEANUP

Upon completion of the installation of water lines, and appurtenances, all debris and surplus materials resulting from the work shall be removed.

-- End of Section --

SECTION TABLE OF CONTENTS

DIVISION 02 - SITE WORK

SECTION 02531

SANITARY SEWERS

PART 1 GENERAL

1.1 REFERENCES
1.2 GENERAL REQUIREMENTS
1.3 SUBMITTALS

PART 2 PRODUCTS

2.1 PIPE
2.1.1 Plastic Pipe
2.1.1.1 PVC Pipe
2.2 REQUIREMENTS FOR FITTINGS
2.2.1 Fittings for Plastic Pipe
2.2.1.1 Fittings for PVC Pipe
2.3 JOINTS
2.3.1 Plastic Pipe Jointing
2.4 BRANCH CONNECTIONS
2.5 FRAMES AND COVERS
2.6 STEEL LADDER
2.7 CEMENT MORTAR
2.7.1 Portland Cement
2.7.2 Portland Cement Concrete
2.8 STRUCTURES
2.8.1 Precast Reinforced Concrete Manhole Sections

PART 3 EXECUTION

3.1 INSTALLATION
3.1.1 Adjacent Facilities
3.1.1.1 Water Lines
3.1.1.2 Structural Foundations
3.1.2 Pipe Laying
3.1.2.1 Trenches
3.1.2.2 Backfill
3.1.2.3 Width of Trench
3.1.2.4 Jointing
3.1.2.5 Handling and Storage
3.1.3 Leakage Tests
3.1.4 Test for Deflection
3.2 CONCRETE CRADLE AND ENCASEMENT
3.3 INSTALLATION OF WYE BRANCHES
3.4 MANHOLE DETAILS
3.4.1 General Requirements
3.4.2 Steel Ladder Anchorage
3.4.3 Jointing, Plastering and Sealing
3.4.4 Setting of Frames and Covers
3.4.5 External Preformed Rubber Joint Seals
3.5 CONNECTING TO EXISTING STUB/RISER

3.6 BUILDING CONNECTIONS
3.7 CLEANOUTS AND OTHER APPURTENANCES

-- End of Section Table of Contents --

SECTION 02531

SANITARY SEWERS

PART 1 GENERAL

1.1 REFERENCES

The publications listed below form a part of this specification to the extent referenced. The publications are referred to in the text by basic designation only.

AMERICAN SOCIETY FOR TESTING AND MATERIALS (ASTM)

ASTM A 123	(1989a) Zinc (Hot-Dip Galvanized) Coatings on Iron and Steel Products
ASTM C 33	(1993) Concrete Aggregates
ASTM C 94	(1996) Ready-Mixed Concrete
ASTM C 150	(1997) Portland Cement
ASTM C 260	(1995) Air-Entraining Admixtures for Concrete
ASTM C 270	(1997) Mortar for Unit Masonry
ASTM C 478	(1996) Precast Reinforced Concrete Manhole Sections
ASTM C 478M	(1996) Precast Reinforced Concrete Manhole Sections (Metric)
ASTM C 828	(1991, R 1996) Low-Pressure Air Test of Vitrified Clay Pipe Lines
ASTM C 924	(1989) Concrete Pipe Sewer Lines by Low-Pressure Air Test Method
ASTM C 972	(1995) Compression-Recovery of Tape Sealant
ASTM D 412	(1992) Vulcanized Rubber and Thermoplastic Rubbers and Thermoplastic Elastomers - Tension
ASTM D 624	(1991; R 1996) Tear Strength of Conventional Vulcanized Rubber and Thermoplastic Elastomers
ASTM D 1784	(1996) Rigid Poly(Vinyl Chloride) (PVC) Compounds and Chlorinated Poly(Vinyl

	Chloride) (CPVC) Compounds
ASTM D 2680	(1995a)Acrylonitrile-Butadiene-Styrene (ABS) and Poly(Vinyl Chloride) (PVC) Composite Sewer Piping
ASTM D 3034	(1994) Type PSM Poly(Vinyl Chloride) (PVC) Sewer Pipe and Fittings
ASTM D 3212	(1996a) Joints for Drain and Sewer Plastic Pipes Using Flexible Elastomeric Seals

NATIONAL FIRE PROTECTION ASSOCIATION (NFPA)

NFPA 49	(1994) Hazardous Chemicals Data
NFPA 325-1	(1994) Fire Hazard Properties of Flammable Liquids, Gases, and Volatile Solids
NFPA 704	(1996) Identification of the Fire Hazards of Materials for Emergency Response

UNI-BELL PVC PIPE ASSOCIATION (UBPPA)

UBPPA UNI-B-6	(1990) Recommended Practice for the Low-Pressure Air Testing of Installed Sewer Pipe

1.2 GENERAL REQUIREMENTS

The construction required herein shall include appurtenant structures and building sewers to points of connection with the building drains outside the building to which the sewer system is to be connected. The Contractor shall replace damaged material and redo unacceptable work at no additional cost to the Government. Excavation and backfilling is specified in Section 02316 EXCAVATION, TRENCHING, AND BACKFILLING FOR UTILITIES SYSTEMS. Backfilling shall be accomplished after inspection by the Contracting Officer. Before, during, and after installation, plastic pipe and fittings shall be protected from any environment that would result in damage or deterioration to the material. The Contractor shall have a copy of the manufacturer's instructions available at the construction site at all times and shall follow these instructions unless directed otherwise by the Contracting Officer. Solvents, solvent compounds, lubricants, elastomeric gaskets, and any similar materials required to install the plastic pipe shall be stored in accordance with the manufacturer's recommendation and shall be discarded if the storage period exceeds the recommended shelf life. Solvents in use shall be discarded when the recommended pot life is exceeded.

1.3 SUBMITTALS

Government approval is required for submittals with a "GA" designation; submittals having an "FIO" designation are for information only. The following shall be submitted in accordance with Section 01330 SUBMITTAL PROCEDURES:

SD-13 Certificates

Portland Cement; GA

Certificates of compliance stating the type of cement used in manufacture of concrete fittings and precast manholes.

Joints; GA

Certificates of compliance stating that the fittings or gaskets used for waste drains or lines designated on the plans as oil resistant.

PART 2 PRODUCTS

2.1 PIPE

Pipe shall conform to the respective specifications and other requirements specified below.

2.1.1 Plastic Pipe

Polyvinyl chloride (PVC) composite sewer piping shall conform to ASTM D 2680. Size through diameter.

2.1.1.1 PVC Pipe

ASTM D 3034, Type PSM with a maximum SDR of 35, Size or less in diameter. PVC shall be certified by the compounder as meeting the requirements of ASTM D 1784, cell Class 12454B. The pipe stiffness shall be greater than or equal to 735/D for cohesionless material pipe trench backfills.

2.2 REQUIREMENTS FOR FITTINGS

Fittings shall be compatible with the pipe supplied and shall have a strength not less than that of the pipe. Fittings shall conform to the respective specifications and other requirements specified below.

2.2.1 Fittings for Plastic Pipe

PVC composite sewer pipe fittings shall conform to ASTM D 2680.

2.2.1.1 Fittings for PVC Pipe

ASTM D 3034 for type PSM pipe.

2.3 JOINTS

Joints installation shall comply with the manufacturer's instructions. Fittings and gaskets utilized for waste drains or industrial waste lines shall be certified by the manufacturer as oil resistant.

2.3.1 Plastic Pipe Jointing

Flexible plastic pipe (PVC pipe) gasketed joints shall conform to ASTM D 3212.

2.4 BRANCH CONNECTIONS

Branch connections shall be made by use of regular fittings or solvent

cemented saddles as approved. Saddles for PVC pipe shall conform to Table 4 of ASTM D 3034.

2.5 FRAMES AND COVERS

Frames and covers shall be cast iron, ductile iron or reinforced concrete. Cast iron frames and covers shall be as indicated or shall be of type suitable for the application, circular, without vent holes. The frames and covers shall have a combined weight of not less than . Reinforced concrete frames and covers shall be as indicated or shall conform to ASTM C 478 or ASTM C 478M. The word "Sewer" shall be stamped or cast into covers so that it is plainly visible.

2.6 STEEL LADDER

A steel ladder shall be provided where the depth of a manhole exceeds The ladder shall not be less than in width, with diameter rungs spaced apart. The two stringers shall be a minimum thick and wide. Ladders and inserts shall be galvanized after fabrication in conformance with ASTM A 123.

2.7 CEMENT MORTAR

Cement mortar shall conform to ASTM C 270, Type M with Type II cement.

2.7.1 Portland Cement

Portland cement shall conform to ASTM C 150, Type V (sulfate resistant) for concrete used in manholes and type optional with the Contractor for cement used in concrete cradle, concrete encasement, and thrust blocking. Air-entraining admixture conforming to ASTM C 260 shall be used with Type V cement. Where aggregates are alkali reactive, as determined by Appendix XI of ASTM C 33, a cement containing less than 0.60 percent alkalies shall be used.

2.7.2 Portland Cement Concrete

Portland cement concrete shall conform to ASTM C 94, compressive strength of 28 MPa at 28 days, except for concrete cradle and encasement or concrete blocks for manholes. Concrete used for cradle and encasement shall have a compressive strength of 17 MPa minimum at 28 days. Concrete in place shall be protected from freezing and moisture loss for 7 days.

2.8 STRUCTURES

2.8.1 Precast Reinforced Concrete Manhole Sections

Precast reinforced concrete manhole sections shall conform to ASTM C 478, except that portland cement shall be as specified herein. Joints shall be cement mortar, an approved mastic, rubber gaskets, a combination of these types; or the use of external preformed rubber joint seals and extruded rolls of rubber with mastic adhesive on one side.

PART 3 EXECUTION

3.1 INSTALLATION

3.1.1 Adjacent Facilities

3.1.1.1 Water Lines

Where the location of the sewer is not clearly defined by dimensions on the drawings, the sewer shall not be closer horizontally than 3 m to a water-supply main or service line, except that where the bottom of the water pipe will be at least 300 mm above the top of the sewer pipe, the horizontal spacing may be a minimum of 2 m. Where gravity-flow sewers cross above water lines, the sewer pipe for a distance of 3 m on each side of the crossing shall be fully encased in concrete or shall be acceptable pressure pipe with no joint closer horizontally than 1 m to the crossing. The thickness of the concrete encasement including that at the pipe joints shall be not less than 100 mm.

3.1.1.2 Structural Foundations

Where sewer pipe is to be installed within 1 m of an existing or proposed building or structural foundation such as a retaining wall, control tower footing, water tank footing, or any similar structure, the sewer pipe shall be sleeved as specified above. Contractor shall ensure there is no damage to these structures, and no settlement or movement of foundations or footing.

3.1.2 Pipe Laying

a. Pipe shall be protected during handling against impact shocks and free fall; the pipe interior shall be free of extraneous material.

b. Pipe laying shall proceed upgrade with the spigot ends of bell-and-spigot pipe and tongue ends of tongue-and-groove pipe pointing in the direction of the flow. Each pipe shall be laid accurately to the line and grade shown on the drawings. Pipe shall be laid and centered so that the sewer has a uniform invert. As the work progresses, the interior of the sewer shall be cleared of all superfluous materials.

c. Before making pipe joints, all surfaces of the portions of the pipe to be joined shall be clean and dry. Lubricants, primers, and adhesives shall be used as recommended by the pipe manufacturer. The joints shall then be placed, fitted, joined, and adjusted to obtain the degree of water tightness required.

3.1.2.1 Trenches

Trenches shall be kept free of water and as dry as possible during bedding, laying, and jointing and for as long a period as required. When work is not in progress, open ends of pipe and fittings shall be satisfactorily closed so that no trench water or other material will enter the pipe or fittings.

3.1.2.2 Backfill

As soon as possible after the joint is made, sufficient backfill material shall be placed along the pipe to prevent pipe movement off line or grade. Plastic pipe shall be completely covered to prevent damage from ultraviolet light.

3.1.2.3 Width of Trench

If the maximum width of the trench at the top of the pipe, as specified in

Section 02316 EXCAVATION, TRENCHING, AND BACKFILLING FOR UTILITIES SYSTEMS, is exceeded for any reason other than by direction, the Contractor shall install, at no additional cost to the Government, concrete cradling, pipe encasement, or other bedding required to support the added load of the backfill.

3.1.2.4 Jointing

Joints between different pipe materials shall be made as specified, using approved jointing materials.

3.1.2.5 Handling and Storage

Pipe, fittings and joint material shall be handled and stored in accordance with the manufacturer's recommendations. Storage facilities for plastic pipe, fittings, joint materials and solvents shall be classified and marked in accordance with NFPA 704, with classification as indicated in NFPA 49 and NFPA 325-1.

3.1.3 Leakage Tests

Lines shall be tested for leakage by low pressure air testing, infiltration tests or exfiltration tests, as appropriate. Low pressure air testing for vitrified clay pipes shall be as prescribed in ASTM C 828. Low pressure air testing for concrete pipes shall be as prescribed in ASTM C 828. Low pressure air testing for PVC pipe shall be as prescribed in UBPPA UNI-B-6. Low pressure air testing procedures for other pipe materials shall use the pressures and testing times prescribed in ASTM C 828 and ASTM C 924, after consultation with the pipe manufacturer. Prior to infiltration or exfiltration tests, the trench shall be backfilled up to at least the lower half of the pipe. If required, sufficient additional backfill shall be placed to prevent pipe movement during testing, leaving the joints uncovered to permit inspection. Visible leaks encountered shall be corrected regardless of leakage test results. When the water table is 600 mm or more above the top of the pipe at the upper end of the pipeline section to be tested, infiltration shall be measured using a suitable weir or other device acceptable to the Contracting Officer. When the Contracting Officer determines that infiltration cannot be properly tested, an exfiltration test shall be made by filling the line to be tested with water so that a head of at least 600 mm is provided above both the water table and the top of the pipe at the upper end of the pipeline to be tested. The filled line shall be allowed to stand until the pipe has reached its maximum absorption, but not less than 4 hours. After absorption, the head shall be re-established. The amount of water required to maintain this water level during a 2-hour test period shall be measured. Leakage as measured by either the infiltration test or exfiltration test shall not exceed 50 mL per 5 mm diameter per 100 m of pipeline per hour. When leakage exceeds the maximum amount specified, satisfactory correction shall be made and retesting accomplished. Testing, correction, and retesting shall be made at no additional cost to the Government.

3.1.4 Test for Deflection

When flexible pipe is used, a deflection test shall be made on the entire length of the installed pipeline not less than 30 days after the completion of all work including the leakage test, backfill, and placement of any fill, grading, paving, concrete, or superimposed loads. Deflection shall be determined by use of a deflection device or by use of a spherical, spheroidal, or elliptical ball, a cylinder, or circular sections fused to a

common shaft. The ball, cylinder, or circular sections shall have a diameter, or minor diameter as applicable, of 92.5 percent of the inside diameter of the pipe. A tolerance of plus 0.5 percent will be permitted. The ball, cylinder, or circular sections shall be of a homogeneous material throughout, shall have a density greater than 1.0 as related to water at and shall have a surface brinell hardness of not less than 150. The device shall be center bored and through bolted with a 6 mm minimum diameter steel shaft having a yield strength of 480 MPa or more, with eyes at each end for attaching pulling cables. The eye shall be suitably backed with flange or heavy washer; a pull exerted on the opposite end of the shaft shall produce compression throughout the remote end of the ball, cylinder or circular section. Circular sections shall be spaced so that the distance from the external faces of the front and back sections shall equal or exceed the diameter of the circular section. Failure of the ball, cylinder, or circular section to pass freely through a pipe run, either by being pulled through or by being flushed through with water, shall be cause for rejection of that run. When a deflection device is used for the test in lieu of the ball, cylinder, or circular sections described, such device shall be approved prior to use. The device shall be sensitive to 1.0 percent of the diameter of the pipe being measured and shall be accurate to 1.0 percent of the indicated dimension. Installed pipe showing deflections greater than 7.5 percent of the normal diameter of the pipe. shall be retested by a run from the opposite direction. If the retest also fails, the suspect pipe shall be replaced at no cost to the Government.

3.2 CONCRETE CRADLE AND ENCASEMENT

The pipe shall be supported on a concrete cradle, or encased in concrete where indicated or directed.

3.3 INSTALLATION OF WYE BRANCHES

Wye branches shall be installed where sewer connections are indicated or where directed. Cutting into piping for connections shall not be done except in special approved cases. When the connecting pipe cannot be adequately supported on undisturbed earth or tamped backfill, the pipe shall be encased in concrete backfill or supported on a concrete cradle as directed. Concrete required because of conditions resulting from faulty construction methods or negligence by the Contractor shall be installed at no additional cost to the Government. The installation of wye branches in an existing sewer shall be made by a method which does not damage the integrity of the existing sewer. One acceptable method consists of removing one pipe section, breaking off the upper half of the bell of the next lower section and half of the running bell of wye section. After placing the new section, it shall be rotated so that the broken half of the bell will be at the bottom. The two joints shall then be made with joint packing and cement mortar.

3.4 MANHOLE DETAILS

3.4.1 General Requirements

Manholes shall be constructed of concrete, or precast concrete manhole sections. The invert channels shall be smooth and semicircular in shape conforming to the inside of the adjacent sewer section. Changes in direction of flow shall be made with a smooth curve of as large a radius as the size of the manhole will permit. Changes in size and grade of the channels shall be made gradually and evenly. The invert channels shall be formed directly in the concrete of the manhole base, or shall be built up

with brick and mortar, or shall be half tile laid in concrete, or shall be constructed by laying full section sewer pipe through the manhole and breaking out the top half after the surrounding concrete has hardened. Pipe connections shall be made to manhole using water stops, standard O-ring joints, special manhole coupling, or shall be made in accordance with the manufacturer's recommendation. The Contractor's proposed method of connection, list of materials selected, and specials required, shall be approved prior to installation. The floor of the manhole outside the channels shall be smooth and shall slope toward the channels not less than 100 mm per meter nor more than Free drop inside the manholes shall not exceed 500 mm, measured from the invert of the inlet pipe to the top of the floor of the manhole outside the channels; drop manholes shall be constructed whenever the free drop would otherwise be greater than 500 mm.

3.4.2 Steel Ladder Anchorage

Ladder shall be adequately anchored to the wall by means of steel inserts spaced not more than 1850 mm apart vertically, and shall be installed to provide at least 150 mm of space between the wall and the rungs. The wall along the line of the ladder shall be vertical for its entire length.

3.4.3 Jointing, Plastering and Sealing

Mortar joints shall be completely filled and shall be smooth and free from surplus mortar on the inside of the manhole. Mortar and mastic joints between precast rings shall be full-bedded in jointing compound and shall be smoothed to a uniform surface on both the interior and exterior of the manhole. Installation of rubber gasket joints between precast rings shall be in accordance with the recommendations of the manufacturer. Precast rings may also be sealed by the use of extruded rolls of rubber with mastic adhesive on one side.

3.4.4 Setting of Frames and Covers

Unless otherwise indicated, tops of frames and covers shall be set flush with finished grade in paved areas or 50 mm higher than finished grade in unpaved areas. Frame and cover assemblies shall be sealed to manhole sections using external preformed rubber joint seals that meet the requirements of ASTM D 412 and ASTM D 624, or other methods specified in paragraph Jointing, Plastering and Sealing, unless otherwise specified.

3.4.5 External Preformed Rubber Joint Seals

External preformed rubber joint seals and extruded rolls of rubber with mastic adhesive shall meet the requirements of ASTM D 412 and ASTM C 972 to ensure conformance with paragraph Leakage Tests. The seal shall be multi-section with neoprene rubber top section and all lower sections made of Ethylene Propylene Di Monomer (EPDM) rubber with a minimum thickness of Each unit shall consist of a top and a bottom section and shall have mastic on the bottom of the bottom section and mastic on the top and bottom of the top section. The mastic shall be non-hardening butyl rubber sealant and shall seal to the cone/top slab of the manhole/catch basin and over the lip of the casting. One unit shall seal a casting and up to six, 50 mm adjusting rings. The bottom section shall be 305 mm in height. A 152 mm high top section will cover up to two, 50 mm adjusting rings. A 305 mm high bottom section will cover up to six, 50 mm adjusting rings. Extension sections shall cover up to two more adjusting rings. Each extension shall overlap the bottom section by 50 mm and shall be overlapped by the top section by

3.5 CONNECTING TO EXISTING STUB/RISER

Pipe connections to existing sanitary stubs/risers shall be made so that finish work will conform as nearly as practicable to the applicable requirements specified for new sewers. The connection to the existing stub/riser shall be made in conformance with the applicable provisions for jointing specified herein.

3.6 BUILDING CONNECTIONS

Building connections shall include the lines to and connection with the building waste drainage piping at a point approximately 1.5 m outside the building, unless otherwise indicated. Where building drain piping is not installed, the Contractor shall terminate the building connections approximately 1.5 m from the site of the building at a point and in a manner designated.

3.7 CLEANOUTS AND OTHER APPURTENANCES

Cleanouts and other appurtenances shall be installed where shown on the drawings or as directed by the Contracting Officer, and shall conform to the detail of the drawings.

-- End of Section --

SECTION TABLE OF CONTENTS

DIVISION 02 - SITE WORK

SECTION 02621

FOUNDATION DRAINAGE SYSTEM

08/97

PART 1 GENERAL

1.1 REFERENCES
1.2 SUBMITTALS
1.3 DELIVER, STORAGE, AND HANDLING
1.3.1 Delivery and Storage
1.3.2 Handling
1.4 NOT USED

PART 2 PRODUCTS

2.1 PIPE FOR SUBDRAINS
2.1.1 Plastic Pipe
2.1.1.1 Not Used
2.1.1.2 Not Used
2.1.1.3 Corrugated Polyethylene (PE) Pipe and Fittings
2.1.1.4 Pipe Perforations
2.2 GEOCOMPOSITE DRAIN
2.3 NOT USED
2.4 SUBDRAIN FILTER AND BEDDING MATERIAL

PART 3 EXECUTION

3.1 EXCAVATION AND BEDDING FOR SUBDRAIN SYSTEMS
3.2 NOT USED
3.3 INSTALLATION OF FILTER FABRIC AND PIPE FOR SUBDRAINS
3.3.1 Installation of Filter Fabric
3.3.1.1 Overlaps on Perforated or Slotted Pipes
3.3.1.2 Installation ofn Open-Joint Pipe
3.3.1.3 Trench Lining and Overlaps
3.3.2 Installation of Pipe for Subdrains
3.3.2.1 Pipelaying
3.3.2.2 Jointings
3.4 INSTALLATION OF GEOCOMPOSITE DRAIN
3.5 INSTALLATION OF FILTER MATERIAL AND BACKFILLING FOR DRAIN TILE
3.6 TESTS
3.6.1 Pipe Test

-- End of Section Table of Contents --

SECTION 02621

FOUNDATION DRAINAGE SYSTEM
08/97

PART 1 GENERAL

1.1 REFERENCES

The publications listed below form a part of this specification to the extent referenced. The publications are referred to in the text by basic designation only.

AMERICAN SOCIETY FOR TESTING AND MATERIALS (ASTM)

ASTM F 405	(1996) Corrugated Polyethylene (PE) Tubing and Fittings

1.2 SUBMITTALS

Government approval is required for submittals with a "GA" designation; submittals having an "FIO" designation are for information only. The following shall be submitted in accordance with Section 01330 SUBMITTAL PROCEDURES:

SD-13 Certificates

Filter Fabric; FIO. Pipe for Subdrains; FIO.

Certifications from the manufacturers attesting that materials meet specification requirements. Certificates are required for drain pipe, drain tile, fittings, and filter fabric.

SD-14 Samples

Filter Fabric; FIO.

Samples of filter fabric, pipe, and pipe fittings, before starting the work.

1.3 DELIVER, STORAGE, AND HANDLING

1.3.1 Delivery and Storage

Materials delivered to site shall be inspected for damage, unloaded, and stored with minimum handling. Materials shall not be stored directly on the ground. The inside of pipes and fittings shall be kept free of dirt and debris. During shipment and storage, filter fabric shall be wrapped in burlap or similar heavy duty protective covering. The storage area shall protect the fabric from mud, soil, dust, and debris. Filter fabric materials that are not to be installed immediately shall not be stored in direct sunlight. Plastic pipe shall be installed within 6 months from the date of manufacture unless otherwise approved.

1.3.2 Handling

Materials shall be handled in such a manner as to insure delivery to the

trench in sound undamaged condition. Pipe shall be carried and not dragged to the trench.

1.4 NOT USED

PART 2 PRODUCTS

2.1 PIPE FOR SUBDRAINS

Pipe for subdrains shall be of the types and sizes indicated.

2.1.1 Plastic Pipe

Plastic pipe shall contain ultraviolet inhibitor to provide protection from exposure to direct sunlight.

2.1.1.1 Not Used

2.1.1.2 Not Used

2.1.1.3 Corrugated Polyethylene (PE) Pipe and Fittings

Use ASTM F 405 for pipes in diameter, inclusive. Drain pipe shall be a 4 inch nominal inside diameter perforated tubing made of high-density polyethylene (HDPE). Fittings and other accessories shall be manufacturer's standard type and shall be compatible with the specified drain pipe.

2.1.1.4 Pipe Perforations

Perforations in drain pipe shall be located only in corrugation valleys. Any and all pipe with holes in corrugation crests or sidewalls shall be considered unacceptable.

2.2 GEOCOMPOSITE DRAIN

Geocomposite drain shall consist of a three-dimensional, High Density Polyethelene (HDPE)core, heat-bonded to a geotextile filter fabric on one side. The core shall be 11.4 mm (0.45 inches) thick with a fabric weight of 169 g/m sq (5.0 oz/yd sq)and shall be of flexible construction. Furnish geocomposite drain in rolls of 100 feet long with a 30 inch geomatrix core width and a 42 inch filter fabric width. The drain shall meet the following criteria:

Property		Test Method	Specification
Grab Strength	lbs	ASTM D-4632	120
Elongation	%	ASTM D-4632	60
Trapezoid Tear	lbs	ASTM D-4533	40
Puncture	lbs	ASTM D-4833	30
Mullen Burst	psi	ASTM D-3786	90
Ulta-Violet Stability	lbs	ASTM D-4751	70
AOS	US Sieve	ASTM D-4751	60
Permittivity	(sec)	ASTM D-4491	.7
Permeability Coeffiecient-k	cm/sec	ASTM D-4491	0.02
Verical Water Flow	gpm/sf	ASTM D-4491	100

2.3 NOT USED

2.4 SUBDRAIN FILTER AND BEDDING MATERIAL

Subdrain filter and bedding material shall be washed sand, sand and gravel, crushed stone, crushed stone screenings, or slag composed of hard, tough, durable particles free from adherent coatings. Filter material shall not contain corrosive agents, organic matter, or soft, friable, thin, or elongated particles and shall be evenly graded between the limits specified in TABLE I. Gradation curves will exhibit no abrupt changes in slope denoting skip or gap grading. Filter materials shall be clean and free from soil and foreign materials. Filter blankets found to be dirty or otherwise contaminated shall be removed and replaced with material meeting the specific requirements, at no additional cost to the Government.

TABLE I. FILTER GRADATION

Sieve Designation	Percent by Weight Passing Gradation A	Gradation B	Gradation C

PART 3 EXECUTION

3.1 EXCAVATION AND BEDDING FOR SUBDRAIN SYSTEMS

Trenching and excavation, including the removal of rock and unstable material, shall be in accordance with Section 02222 EXCAVATION, TRENCHING, AND BACKFILLING FOR UTILITIES SYSTEMS. Bedding material shall be placed in the trench as indicated or as required as replacement materials used in those areas where unstable materials were removed. Compaction of the bedding material shall be as specified for cohesionless material in Section 02222 EXCAVATION, TRENCHING, AND BACKFILLING FOR UTILITIES SYSTEMS.

3.2 NOT USED

3.3 INSTALLATION OF FILTER FABRIC AND PIPE FOR SUBDRAINS

3.3.1 Installation of Filter Fabric

3.3.1.1 Overlaps on Perforated or Slotted Pipes

One layer of filter fabric shall be wrapped around perforated or slotted collector pipes in such a manner that longitudinal overlaps of fabric are in unperforated or unslotted quadrants of the pipes. The overlap shall be at least (2 inches). The fabric shall be secured to the pipe in such a manner that backfill material will not infiltrate through any fabric overlaps.

3.3.1.2 Installation ofn Open-Joint Pipe

One layer of filter fabric shall be wrapped around open joints. The overlap should be at least 2 inches. The fabric shall be secured to the pipe in such a manner that backfill material will not infiltrate through the overlap or the edges of the fabric to either side of the open joint.

3.3.1.3 Trench Lining and Overlaps

Trenches to be lined with filter fabric shall be graded to obtain smooth side and bottom surfaces so that the fabric will not bridge cavities in the soil or be damaged by projecting rock. The fabric shall be laid flat but not stretched on the soil, and it shall be secured with anchor pins. Overlaps shall be at least (6 inches), and anchor pins shall be used along the overlaps.

3.3.2 Installation of Pipe for Subdrains

3.3.2.1 Pipelaying

Each pipe shall be carefully inspected before it is laid. Any defective or damaged pipe shall be rejected. No pipe shall be laid when the trench conditions or weather is unsuitable for such work. Water shall be removed from trenches by sump pumping or other approved methods. The pipe shall be

laid to the grades and alignment as indicated. The pipe shall be bedded to the established gradeline. Perforations shall be centered on the bottom of the pipe. All pipes in place shall be approved before backfilling.

3.3.2.2 Jointings

Perforated Corrugated Polyethylene Pipe: Perforated corrugated polyethylene drainage pipe shall be installed in accordance with the manufacturer's specifications and as specified herein. A pipe with physical imperfections shall not be installed. No more than 5 percent stretch in a section will be permitted.

3.4 INSTALLATION OF GEOCOMPOSITE DRAIN

Install geocomposite drain in vertical strips and cut to length, as required, so drain is in contact with the walls and footings and drapes over the drain pipe. For each strip, the top 127 mm (5 inches) the geomatrix core shall be separated from the filter fabric and shall be cut off. Geocomposite drain shall be glued to subsurface insulation with a bead of adhesive applied to the 5 inches of exposed filter fabric at the to of each strip and with geomatric core against the subsurface insulation. Geocomposite drain shall be cut to fit, as required, around wall penetrations such as as underground utilities, and wrapped tightly around corners in foundation. Cuts in geocomposite drain shall be mended with duct tape or mastic tape. At joints between strips, 3 inch filter fabric overlap shall be glued continuously to previously installed strip using adhesive. Soil or other suitable materials shall be placed on the bottom of each strip to temporarily hold geocomposite drain in place against structure and over drain pipe until backfilling work begins.

3.5 INSTALLATION OF FILTER MATERIAL AND BACKFILLING FOR DRAIN TILE

After pipe for subdrains has been laid, inspected, and approved, filter material shall be placed around and over the pipe to the depth indicated. The filter material shall be placed in layers not to exceed (8 inches) thick, and each layer shall be thoroughly compacted by mechanical tampers or rammers to obtain the required density. Compaction of filter material and the placement and compaction of overlying backfill material shall be in accordance with the applicable provisions specified in Section 02222 EXCAVATION, TRENCHING, AND BACKFILLING FOR UTILITIES SYSTEMS.

3.6 TESTS

3.6.1 Pipe Test

Strength tests of pipe shall conform to field service test requirements of the Federal Specification, ASTM specification, or AASHTO specification covering the product (paragraph PIPE FOR SUBDRAINS).

-- End of Section --

SECTION TABLE OF CONTENTS

DIVISION 02 - SITE WORK

SECTION 02630

STORM-DRAINAGE SYSTEM

PART 1 GENERAL

1.1 REFERENCES
1.2 SUBMITTALS
1.3 DELIVERY, STORAGE, AND HANDLING
1.3.1 Delivery and Storage
1.3.2 Handling

PART 2 PRODUCTS

2.1 PIPE FOR CULVERTS AND STORM DRAINS
2.1.1 Concrete Pipe
2.2 MISCELLANEOUS MATERIALS
2.2.1 Concrete
2.2.2 Mortar
2.2.3 Precast Concrete Segmental Blocks
2.2.4 Brick
2.2.5 Precast Reinforced Concrete Manholes
2.2.6 Frame and Cover for Gratings
2.2.7 Joints
2.2.7.1 Flexible Watertight Joints
2.2.7.2 Flexible Watertight, Gasketed Joints
2.3 DOWNSPOUT BOOTS
2.4 HYDROSTATIC TEST ON WATERTIGHT JOINTS
2.4.1 Concrete Pipe

PART 3 EXECUTION

3.1 EXCAVATION FOR STORM DRAINS, AND DRAINAGE STRUCTURES
3.1.1 Trenching
3.1.2 Removal of Rock
3.1.3 Removal of Unstable Material
3.2 BEDDING
3.2.1 Concrete Pipe Requirements
3.3 PLACING PIPE
3.3.1 Concrete Pipe
3.4 JOINTING
3.4.1 Concrete Pipe
3.4.1.1 Cement-Mortar Bell-and-Spigot Joint
3.4.1.2 Cement-Mortar Oakum Joint for Bell-and-Spigot Pipe
3.4.1.3 Cement-Mortar Diaper Joint for Bell-and-Spigot Pipe
3.4.1.4 Cement-Mortar Tongue-and-Groove Joint
3.4.1.5 Cement-Mortar Diaper Joint for Tongue-and-Groove Pipe
3.4.1.6 Plastic Sealing Compound Joints for Tongue-and-Grooved Pipe
3.4.1.7 Flexible Watertight Joints
3.4.2 [Enter Appropriate Subpart Title Here]
3.4.2.1 Flexible Watertight, Gasketed Joints
3.5 DRAINAGE STRUCTURES

3.5.1 Manholes and Inlets
3.6 BACKFILLING
3.6.1 Backfilling Pipe in Trenches
3.6.2 Backfilling Pipe in Fill Sections
3.6.3 Movement of Construction Machinery
3.6.4 Compaction
3.6.4.1 General Requirements
3.6.4.2 Minimum Density
3.6.5 Determination of Density
3.7 PIPELINE TESTING

-- End of Section Table of Contents --

SECTION 02630

STORM-DRAINAGE SYSTEM

PART 1 GENERAL

1.1 REFERENCES

The publications listed below form a part of this specification to the extent referenced. The publications are referred to in the text by basic designation only.

AMERICAN ASSOCIATION OF STATE HIGHWAY AND TRANSPORTATION OFFICIALS (AASHTO)

AASHTO M 198	(1994) Joints for Circular Concrete Sewer and Culvert Pipe Using Flexible Watertight Gaskets

AMERICAN SOCIETY FOR TESTING AND MATERIALS (ASTM)

ASTM C 32	(1993) Sewer and Manhole Brick (Made from Clay or Shale)
ASTM C 55	(1997) Concrete Building Brick
ASTM C 62	(1997) Building Brick (Solid Masonry Units Made from Clay or Shale)
ASTM C 76	(1997) Reinforced Concrete Culvert, Storm Drain, and Sewer Pipe
ASTM C 139	(1997) Concrete Masonry Units for Construction of Catch Basins and Manholes
ASTM C 231	(1997) Air Content of Freshly Mixed Concrete by the Pressure Method
ASTM C 270	(1997a) Mortar for Unit Masonry
ASTM C 443	(1994) Joints for Circular Concrete Sewer and Culvert Pipe, Using Rubber Gaskets
ASTM C 478	(1997) Precast Reinforced Concrete Manhole Sections
ASTM C 924	(1989; R 1997) Concrete Pipe Sewer Lines by Low-Pressure Air Test Method
ASTM C 1103	(1994) Joint Acceptance Testing of Installed Precast Concrete Pipe Sewer Lines

ASTM D 1056	(1991) Flexible Cellular Materials - Sponge or Expanded Rubber
ASTM D 1171	(1994) Rubber Deterioration - Surface Ozone Cracking Outdoors or Chamber (Triangular Specimens)
ASTM D 1557	(1991) Laboratory Compaction Characteristics of Soil Using Modified Effort (56,000 ft-lbf/cu. ft. (2,700 kN-m/cu.m.))
ASTM D 1751	(1983; R 1991) Preformed Expansion Joint Filler for Concrete Paving and Structural Construction (Nonextruding and Resilient Bituminous Types)
ASTM D 1752	(1984; R 1996) Preformed Sponge Rubber and Cork Expansion Joint Fillers for Concrete Paving and Structural Construction
ASTM D 2922	(1996) Density of Soil and Soil-Aggregate in Place by Nuclear Methods (Shallow Depth)
ASTM D 3017	(1988; R 1993) Water Content of Soil and Rock in Place by Nuclear Methods (Shallow Depth)
ASTM F 1417	(1992) Installation Acceptance of Plastic Gravity Sewer Lines Using Low-Pressure Air

1.2 SUBMITTALS

Government approval is required for submittals with a "GA" designation; submittals having an "FIO" designation are for information only. The following shall be submitted in accordance with Section 01330 SUBMITTAL PROCEDURES:

SD-06 Instructions

Placing Pipe; GA

Printed copies of the manufacturer's recommendations for installation procedures of the material being placed, prior to installation.

SD-13 Certificates

Pipeline Testing; GA, Hydrostatic Test on Watertight Joints;GA, Determination of Density; GA, and Frame and Cover for Gratings; GA.

Certified copies of test reports demonstrating conformance to applicable pipe specifications, before pipe is installed. Certification on the ability of frame and cover or gratings to carry the imposed live load.

1.3 DELIVERY, STORAGE, AND HANDLING

1.3.1 Delivery and Storage

Materials delivered to site shall be inspected for damage, unloaded, and stored with a minimum of handling. Materials shall not be stored directly on the ground. The inside of pipes and fittings shall be kept free of dirt and debris.Gasket materials and plastic materials shall be protected from exposure to direct sunlight over extended periods.

1.3.2 Handling

Materials shall be handled in a manner that ensures delivery to the trench in sound, undamaged condition. Pipe shall be carried to the trench, not dragged.

PART 2 PRODUCTS

2.1 PIPE FOR CULVERTS AND STORM DRAINS

Pipe for culverts and storm drains shall be of the sizes indicated and shall conform to the requirements specified.

2.1.1 Concrete Pipe

ASTM C 76, ClassII, or ASTM C 655

2.2 MISCELLANEOUS MATERIALS

2.2.1 Concrete

Unless otherwise specified, concrete and reinforced concrete shall conform to the requirements for 28 MPa Type V (sulfate resistant) concrete under Section 03300 CAST-IN-PLACE STRUCTURAL CONCRETE. The concrete mixture shall have air content by volume of concrete, based on measurements made immediately after discharge from the mixer, of 5 to 7 percent when maximum size of coarse aggregate exceeds Air content shall be determined in accordance with ASTM C 231. The concrete covering over steel reinforcing shall not be less than 25 mm thick for covers and not less than thick for walls and flooring. Concrete covering deposited directly against the ground shall have a thickness of at least between steel and ground. Expansion-joint filler material shall conform to ASTM D 1751, or ASTM D 1752, or shall be resin-impregnated fiberboard conforming to the physical requirements of ASTM D 1752.

2.2.2 Mortar

Mortar for pipe joints, connections to other drainage structures, and brick or block construction shall conform to ASTM C 270, Type M, except that the maximum placement time shall be 1 hour. The quantity of water in the mixture shall be sufficient to produce a stiff workable mortar. Water shall be clean and free of harmful acids, alkalies, and organic impurities. The mortar shall be used within 30 minutes after the ingredients are mixed with water. The inside of the joint shall be wiped clean and finished smooth. The mortar head on the outside shall be protected from air and sun with a proper covering until satisfactorily cured.

2.2.3 Precast Concrete Segmental Blocks

Precast concrete segmental block shall conform to ASTM C 139, not more than thick, not less thanlong, and of such shape that joints can be sealed effectively and bonded with cement mortar.

2.2.4 Brick

Brick shall conform to ASTM C 62, Grade SW; ASTM C 55, Grade S-I or S-II; or ASTM C 32, Grade MS. Mortar for jointing and plastering shall consist of one part portland cement and two parts fine sand. Lime may be added to the mortar in a quantity not more than 25 percent of the volume of cement. The joints shall be filled completely and shall be smooth and free from surplus mortar on the inside of the structure. Brick structures shall be plastered with of mortar over the entire outside surface of the walls. For square or rectangular structures, brick shall be laid in stretcher courses with a header course every sixth course. For round structures, brick shall be laid radially with every sixth course a stretcher course.

2.2.5 Precast Reinforced Concrete Manholes

Precast reinforced concrete manholes shall conform to ASTM C 478. Joints between precast concrete risers and tops shall be full-bedded in cement mortar and shall be smoothed to a uniform surface on both interior and exterior of the structure.

2.2.6 Frame and Cover for Gratings

Frame and cover for gratings shall be cast gray iron, ASTM A 48, Class 35B; cast ductile iron, ASTM A 536, Grade 65-45-12; or cast aluminum, ASTM B 26/B 26M, Alloy 356.OT6. Weight, shape, size, and waterway openings for grates and curb inlets shall be as indicated on the plans.

2.2.7 Joints

2.2.7.1 Flexible Watertight Joints

a. Materials: Flexible watertight joints shall be made with plastic or rubber-type gaskets for concrete pipe. The design of joints and the physical requirements for plastic gaskets shall conform to AASHTO M 198, and rubber-type gaskets shall conform to ASTM C 443. Factory-fabricated resilient joint materials shall conform to ASTM C 425. Gaskets shall have not more than one factory-fabricated splice, except that two factory-fabricated splices of the rubber-type gasket are permitted if the nominal diameter of the pipe being gasketed exceeds

b. Test Requirements: Watertight joints shall be tested and shall meet test requirements of paragraph HYDROSTATIC TEST ON WATERTIGHT JOINTS. Rubber gaskets shall comply with the oil resistant gasket requirements of ASTM C 443. Certified copies of test results shall be delivered to the Contracting Officer before gaskets or jointing materials are installed. Alternate types of watertight joint may be furnished, if specifically approved.

2.2.7.2 Flexible Watertight, Gasketed Joints

a. Gaskets: When infiltration or exfiltration is a concern for pipe lines, the couplings may be required to have gaskets. The closed-cell expanded rubber gaskets shall be a continuous band approximately wide and approximatelythick, meeting the requirements of ASTM D 1056, Type 2 A1, and shall have a quality retention rating of not less than 70 percent when tested for weather resistance by ozone chamber exposure, Method B of ASTM D

1171. Rubber O-ring gaskets shall be in diameter for pipe diameters ofor smaller andin diameter for larger pipe having deep end corrugation. Rubber O-ring gaskets shall be in diameter for pipe having 25 mm deep end corrugations. O-rings shall meet the requirements of AASHTO M 198 or ASTM C 443. Flexible plastic gaskets shall conform to requirements of AASHTO M 198, Type B.

b. Connecting Bands: Connecting bands shall be of the type, size and sheet thickness of band, and the size of angles, bolts, rods and lugs as indicated or where not indicated as specified in the applicable standards or specifications for the pipe. Exterior rivet heads in the longitudinal seam under the connecting band shall be countersunk or the rivets shall be omitted and the seam welded. Watertight joints shall be tested and shall meet the test requirements of paragraph HYDROSTATIC TEST ON WATERTIGHT JOINTS.

2.3 DOWNSPOUT BOOTS

Boots used to connect exterior downspouts to the storm-drainage system shall be of gray cast iron conforming to ASTM A 48, Class 30B or 35B. Shape and size shall be as indicated.

2.4 HYDROSTATIC TEST ON WATERTIGHT JOINTS

2.4.1 Concrete Pipe

A hydrostatic test shall be made on the watertight joint types as proposed. Only one sample joint of each type needs testing; however, if the sample joint fails because of faulty design or workmanship, an additional sample joint may be tested. During the test period, gaskets or other jointing material shall be protected from extreme temperatures which might adversely affect the performance of such materials. Performance requirements for joints in reinforced and nonreinforced concrete pipe shall conform to AASHTO M 198 or ASTM C 443.

PART 3 EXECUTION

3.1 EXCAVATION FOR STORM DRAINS, AND DRAINAGE STRUCTURES

Excavation of trenches, and for appurtenances and backfilling for storm drains, shall be in accordance with the applicable portions of Section 02316 EXCAVATION, TRENCHING, AND BACKFILLING FOR UTILITIES SYSTEMS andSection 02300 EARTHWORK and the requirements specified below.

3.1.1 Trenching

The width of trenches at any point below the top of the pipe shall be not greater than the outside diameter of the pipe plus 300 mm to permit satisfactory jointing and thorough tamping of the bedding material under and around the pipe. Sheeting and bracing, where required, shall be placed within the trench width as specified. Contractor shall not overexcavate. Where trench widths are exceeded, redesign with a resultant increase in cost of stronger pipe or special installation procedures will be necessary. Cost of this redesign and increased cost of pipe or installation shall be borne by the Contractor without additional cost to the Government.

3.1.2 Removal of Rock

Rock in either ledge or boulder formation shall be replaced with suitable

materials to provide a compacted earth cushion having a thickness between unremoved rock and the pipe of at least or 13 mm for each of fill over the top of the pipe, whichever is greater, but not more than three-fourths the nominal diameter of the pipe. Where bell-and-spigot pipe is used, the cushion shall be maintained under the bell as well as under the straight portion of the pipe. Rock excavation shall be as specified and defined in Section 02316 EXCAVATION, TRENCHING, AND BACKFILLING FOR UTILITIES SYSTEMS.

3.1.3 Removal of Unstable Material

Where wet or otherwise unstable soil incapable of properly supporting the pipe, as determined by the Contracting Officer, is unexpectedly encountered in the bottom of a trench, such material shall be removed to the depth required and replaced to the proper grade with select granular material, compacted as provided in paragraph BACKFILLING. When removal of unstable material is due to the fault or neglect of the Contractor in his performance of shoring and sheeting, water removal, or other specified requirements, such removal and replacement shall be performed at no additional cost to the government.

3.2 BEDDING

The bedding surface for the pipe shall provide a firm foundation of uniform density throughout the entire length of the pipe.

3.2.1 Concrete Pipe Requirements

When no bedding class is specified or detailed on the drawings, concrete pipe shall be bedded in a soil foundation accurately shaped and rounded to conform to the lowest one-fourth of the outside portion of circular pipe or to the lower curved portion of pipe arch for the entire length of the pipe or pipe arch. When necessary, the bedding shall be tamped. Bell holes and depressions for joints shall be not more than the length, depth, and width required for properly making the particular type of joint.

3.3 PLACING PIPE

Each pipe shall be thoroughly examined before being laid; defective or damaged pipe shall not be used. Pipelines shall be laid to the grades and alignment indicated. Proper facilities shall be provided for lowering sections of pipe into trenches. Lifting lugs in vertically elongated metal pipe shall be placed in the same vertical plane as the major axis of the pipe. Pipe shall not be laid in water, and pipe shall not be laid when trench conditions or weather are unsuitable for such work. Diversion of drainage or dewatering of trenches during construction shall be provided as necessary.

3.3.1 Concrete Pipe

Laying shall proceed upgrade with spigot ends of bell-and-spigot pipe and tongue ends of tongue-and-groove pipe pointing in the direction of the flow.

3.4 JOINTING

3.4.1 Concrete Pipe

3.4.1.1 Cement-Mortar Bell-and-Spigot Joint

The first pipe shall be bedded to the established gradeline, with the bell

end placed upstream. The interior surface of the bell shall be thoroughly cleaned with a wet brush and the lower portion of the bell filled with mortar as required to bring inner surfaces of abutting pipes flush and even. The spigot end of each subsequent pipe shall be cleaned with a wet brush and uniformly matched into a bell so that sections are closely fitted. After each section is laid, the remainder of the joint shall be filled with mortar, and a bead shall be formed around the outside of the joint with sufficient additional mortar. If mortar is not sufficiently stiff to prevent appreciable slump before setting, the outside of the joint shall be wrapped or bandaged with cheesecloth to hold mortar in place.

3.4.1.2 Cement-Mortar Oakum Joint for Bell-and-Spigot Pipe

A closely twisted gasket shall be made of jute or oakum of the diameter required to support the spigot end of the pipe at the proper grade and to make the joint concentric. Joint packing shall be in one piece of sufficient length to pass around the pipe and lap at top. This gasket shall be thoroughly saturated with neat cement grout. The bell of the pipe shall be thoroughly cleaned with a wet brush, and the gasket shall be laid in the bell for the lower third of the circumference and covered with mortar. The spigot of the pipe shall be thoroughly cleaned with a wet brush, inserted in the bell, and carefully driven home. A small amount of mortar shall be inserted in the annular space for the upper two-thirds of the circumference. The gasket shall be lapped at the top of the pipe and driven home in the annular space with a caulking tool. The remainder of the annular space shall be filled completely with mortar and beveled at an angle of approximately 45 degrees with the outside of the bell. If mortar is not sufficiently stiff to prevent appreciable slump before setting, the outside of the joint thus made shall be wrapped with cheesecloth. Placing of this type of joint shall be kept at least five joints behind laying operations.

3.4.1.3 Cement-Mortar Diaper Joint for Bell-and-Spigot Pipe

The pipe shall be centered so that the annular space is uniform. The annular space shall be caulked with jute or oakum. Before caulking, the inside of the bell and the outside of the spigot shall be cleaned.

a. Diaper Bands: Diaper bands shall consist of heavy cloth fabric to hold grout in place at joints and shall be cut in lengths that extend one-eighth of the circumference of pipe above the spring line on one side of the pipe and up to the spring line on the other side of the pipe. Longitudinal edges of fabric bands shall be rolled and stitched around two pieces of wire. Width of fabric bands shall be such that after fabric has been securely stitched around both edges on wires, the wires will be uniformly spaced not less than 200 mm apart. Wires shall be cut into lengths to pass around pipe with sufficient extra length for the ends to be twisted at top of pipe to hold the band securely in place; bands shall be accurately centered around lower portion of joint.

b. Grout: Grout shall be poured between band and pipe from the high side of band only, until grout rises to the top of band at the spring line of pipe, or as nearly so as possible, on the opposite side of pipe, to ensure a thorough sealing of joint around the portion of pipe covered by the band. Silt, slush, water, or polluted mortar grout forced up on the lower side shall be forced out by pouring, and removed.

c. Remainder of Joint: The remaining unfilled upper portion of the joint shall be filled with mortar and a bead formed around the outside of this upper portion of the joint with a sufficient amount of additional mortar. The diaper shall be left in place. Placing of this type of joint shall be kept at least five joints behind actual laying of pipe. No backfilling around joints shall be done until joints have been fully inspected and approved.

3.4.1.4 Cement-Mortar Tongue-and-Groove Joint

The first pipe shall be bedded carefully to the established gradeline with the groove upstream. A shallow excavation shall be made underneath the pipe at the joint and filled with mortar to provide a bed for the pipe. The grooved end of the first pipe shall be thoroughly cleaned with a wet brush, and a layer of soft mortar applied to the lower half of the groove. The tongue of the second pipe shall be cleaned with a wet brush; while in horizontal position, a layer of soft mortar shall be applied to the upper half of the tongue. The tongue end of the second pipe shall be inserted in the grooved end of the first pipe until mortar is squeezed out on interior and exterior surfaces. Sufficient mortar shall be used to fill the joint completely and to form a bead on the outside.

3.4.1.5 Cement-Mortar Diaper Joint for Tongue-and-Groove Pipe

The joint shall be of the type described for cement-mortar tongue-and-groove joint in this paragraph, except that the shallow excavation directly beneath the joint shall not be filled with mortar until after a gauze or cheesecloth band dipped in cement mortar has been wrapped around the outside of the joint. The cement-mortar bead at the joint shall be at leastthick and the width of the diaper band shall be at least The diaper shall be left in place. Placing of this type of joint shall be kept at least five joints behind the actual laying of the pipe. Backfilling around the joints shall not be done until the joints have been fully inspected and approved.

3.4.1.6 Plastic Sealing Compound Joints for Tongue-and-Grooved Pipe

Sealing compounds shall follow the recommendation of the particular manufacturer in regard to special installation requirements. Surfaces to receive lubricants, primers, or adhesives shall be dry and clean. Sealing compounds shall be affixed to the pipe not more than 3 hours prior to installation of the pipe, and shall be protected from the sun, blowing dust, and other deleterious agents at all times. Sealing compounds shall be inspected before installation of the pipe, and any loose or improperly affixed sealing compound shall be removed and replaced. The pipe shall be aligned with the previously installed pipe, and the joint pulled together. If, while making the joint with mastic-type sealant, a slight protrusion of the material is not visible along the entire inner and outer circumference of the joint when the joint is pulled up, the pipe shall be removed and the joint remade. After the joint is made, all inner protrusions shall be cut off flush with the inner surface of the pipe. If nonmastic-type sealant material is used, the "Squeeze-Out" requirement above will be waived.

3.4.1.7 Flexible Watertight Joints

Gaskets and jointing materials shall be as recommended by the particular manufacturer in regard to use of lubricants, cements, adhesives, and other special installation requirements. Surfaces to receive lubricants,

cements, or adhesives shall be clean and dry. Gaskets and jointing materials shall be affixed to the pipe not more than 24 hours prior to the installation of the pipe, and shall be protected from the sun, blowing dust, and other deleterious agents at all times. Gaskets and jointing materials shall be inspected before installing the pipe; any loose or improperly affixed gaskets and jointing materials shall be removed and replaced. The pipe shall be aligned with the previously installed pipe, and the joint pushed home. If, while the joint is being made the gasket becomes visibly dislocated the pipe shall be removed and the joint remade.

3.4.2 [Enter Appropriate Subpart Title Here]

3.4.2.1 Flexible Watertight, Gasketed Joints

Installation shall be as recommended by the gasket manufacturer for use of lubricants and cements and other special installation requirements. The gasket shall be placed over one end of a section of pipe for half the width of the gasket. The other half shall be doubled over the end of the same pipe. When the adjoining section of pipe is in place, the doubled-over half of the gasket shall then be rolled over the adjoining section. Any unevenness in overlap shall be corrected so that the gasket covers the end of pipe sections equally. Connecting bands shall be centered over adjoining sections of pipe, and rods or bolts placed in position and nuts tightened. Band Tightening: The band shall be tightened evenly, even tension being kept on the rods or bolts, and the gasket; the gasket shall seat properly in the corrugations. Watertight joints shall remain uncovered for a period of time designated, and before being covered, tightness of the nuts shall be measured with a torque wrench. If the nut has tended to loosen its grip on the bolts or rods, the nut shall be retightened with a torque wrench and remain uncovered until a tight, permanent joint is assured.

3.5 DRAINAGE STRUCTURES

3.5.1 Manholes and Inlets

Construction shall be of reinforced concrete, plain concrete, brick, precast reinforced concrete, precast concrete segmental blocks, prefabricated corrugated metal, or bituminous coated corrugated metal; complete with frames and covers or gratings; and with fixed galvanized steel ladders where indicated. Pipe studs and junction chambers of prefabricated corrugated metal manholes shall be fully bituminous-coated and paved when the connecting branch lines are so treated.

3.6 BACKFILLING

3.6.1 Backfilling Pipe in Trenches

After the pipe has been properly bedded, selected material from excavation or borrow, at a moisture content that will facilitate compaction, shall be placed along both sides of pipe in layers not exceeding 150 mm in compacted depth. The backfill shall be brought up evenly on both sides of pipe for the full length of pipe. The fill shall be thoroughly compacted under the haunches of the pipe. Each layer shall be thoroughly compacted with mechanical tampers or rammers. This method of filling and compacting shall continue until the fill has reached an elevation of at least 300 mm above the top of the pipe. The remainder of the trench shall be backfilled and compacted by spreading and rolling or compacted by mechanical rammers or tampers in layers not exceeding Tests for density shall be made as necessary to ensure conformance to the compaction requirements specified below. Where it is necessary, in the opinion of the Contracting Officer,

that sheeting or portions of bracing used be left in place, the contract will be adjusted accordingly. Untreated sheeting shall not be left in place beneath structures or pavements.

3.6.2 Backfilling Pipe in Fill Sections

For pipe placed in fill sections, backfill material and the placement and compaction procedures shall be as specified below. The fill material shall be uniformly spread in layers longitudinally on both sides of the pipe, not exceeding in compacted depth, and shall be compacted by rolling parallel with pipe or by mechanical tamping or ramming. Prior to commencing normal filling operations, the crown width of the fill at a height of above the top of the pipe shall extend a distance of not less than twice the outside pipe diameter on each side of the pipe or whichever is less. After the backfill has reached at least above the top of the pipe, the remainder of the fill shall be placed and thoroughly compacted in layers not exceeding 250 mm.

3.6.3 Movement of Construction Machinery

When compacting by rolling or operating heavy equipment parallel with the pipe, displacement of or injury to the pipe shall be avoided. Movement of construction machinery over a storm drain at any stage of construction shall be at the Contractor's risk. Any damaged pipe shall be repaired or replaced.

3.6.4 Compaction

3.6.4.1 General Requirements

Cohesionless materials include gravels, gravel-sand mixtures, sands, and gravelly sands. Cohesive materials include clayey and silty gravels, gravel-silt mixtures, clayey and silty sands, sand-clay mixtures, clays, silts, and very fine sands. When results of compaction tests for moisture-density relations are recorded on graphs, cohesionless soils will show straight lines or reverse-shaped moisture-density curves, and cohesive soils will show normal moisture-density curves.

3.6.4.2 Minimum Density

Backfill over and around the pipe and backfill around and adjacent to drainage structures shall be compacted at the approved moisture content to the following applicable minimum density, which will be determined as specified below.

a. Under paved roads and parking lots, including adjacent shoulder areas, the density shall be not less than 90 percent of maximum density for cohesive material and 95 percent of maximum density for cohesionless material, up to the elevation where requirements for pavement subgrade materials and compaction shall control.

b. Under unpaved or turfed traffic areas, density shall not be less than 90 percent of maximum density for cohesive material and 95 percent of maximum density for cohesionless material.

c. Under nontraffic areas, density shall be not less than that of the surrounding material.

3.6.5 Determination of Density

Testing shall be the responsibility of the Contractor and performed at no additional cost to the Government. Testing shall be performed by an approved commercial testing laboratory or by the Contractor subject to approval. Tests shall be performed in sufficient number to ensure that specified density is being obtained. Laboratory tests for moisture-density relations shall be made in accordance with ASTM D 1557 except that mechanical tampers may be used provided the results are correlated with those obtained with the specified hand tamper. Field density tests shall be determined in accordance with ASTM D 2167 or ASTM D 2922. When ASTM D 2922 is used, the calibration curves shall be checked and adjusted, if necessary, using the sand cone method as described in paragraph Calibration of the referenced publications. ASTM D 2922 results in a wet unit weight of soil and when using this method ASTM D 3017 shall be used to determine the moisture content of the soil. The calibration curves furnished with the moisture gauges shall be checked along with density calibration checks as described in ASTM D 3017 or ASTM D 2922. Test results shall be furnished the Contracting Officer. The calibration checks of both the density and moisture gauges shall be made at the beginning of a job on each different type of material encountered and at intervals as directed.

3.7 PIPELINE TESTING

Lines shall be tested for leakage by low pressure air or water testing or exfiltration tests, as appropriate. Low pressure air testing for vitrified clay pipes shall conform to ASTM C 828. Low pressure air testing for concrete pipes shall conform to ASTM C 924. Low pressure air testing for plastic pipe shall conform to ASTM F 1417. Low pressure air testing procedures for other pipe materials shall use the pressures and testing times prescribed in ASTM C 828 or ASTM C 924, after consultation with the pipe manufacturer. Testing of individual joints for leakage by low pressure air or water shall conform to ASTM C 1103. Prior to exfiltration tests, the trench shall be backfilled up to at least the lower half of the pipe. If required, sufficient additional backfill shall be placed to prevent pipe movement during testing, leaving the joints uncovered to permit inspection. Visible leaks encountered shall be corrected regardless of leakage test results. When the water table is or more above the top of the pipe at the upper end of the pipeline section to be tested, infiltration shall be measured using a suitable weir or other device acceptable to the Contracting Officer. An exfiltration test shall be made by filling the line to be tested with water so that a head of at least is provided above both the water table and the top of the pipe at the upper end of the pipeline to be tested. The filled line shall be allowed to stand until the pipe has reached its maximum absorption, but not less than 4 hours. After absorption, the head shall be reestablished. The amount of water required to maintain this water level during a 2-hour test period shall be measured. Leakage as measured by the exfiltration test shall not exceed of pipeline per hour. When leakage exceeds the maximum amount specified, satisfactory correction shall be made and retesting accomplished. Testing, correcting, and retesting shall be made at no additional cost to the Government.

-- End of Section --

SECTION TABLE OF CONTENTS

DIVISION 02 - SITE WORK

SECTION 02722

AGGREGATE AND/OR GRADED-CRUSHED AGGREGATE BASE COURSE

PART 1 GENERAL

1.1 REFERENCES
1.2 DEFINITIONS
1.2.1 Graded-crushed Aggregate Base Course
1.2.2 Degree of Compaction
1.3 SUBMITTALS
1.4 SAMPLING AND TESTING
1.4.1 Sampling
1.4.2 Tests
1.4.2.1 Sieve Analysis
1.4.2.2 Liquid Limit and Plasticity Index
1.4.2.3 Moisture-Density Determinations
1.4.2.4 Field Density Tests
1.4.2.5 Wear Test
1.4.2.6 Soundness
1.4.3 Testing Frequency
1.4.3.1 Initial Tests
1.4.3.2 In Place Tests
1.4.4 Approval of Material
1.5 WEATHER LIMITATIONS
1.6 PLANT, EQUIPMENT, AND TOOLS

PART 2 PRODUCTS

2.1 AGGREGATES
2.1.1 Coarse Aggregate
2.1.1.1 Graded-Crushed Aggregate Base Course
2.1.2 Fine Aggregate
2.1.2.1 Graded-Crushed Aggregate Base Course
2.1.3 Gradation Requirements
2.1.4 Liquid Limit and Plasticity Index

PART 3 EXECUTION

3.1 GENERAL REQUIREMENTS
3.2 OPERATION OF AGGREGATE SOURCES
3.3 STOCKPILING MATERIAL
3.4 PREPARATION OF UNDERLYING COURSE
3.5 INSTALLATION
3.5.1 Mixing the Materials
3.5.2 Placing
3.5.3 Grade Control
3.5.4 Edges of Base Course
3.5.5 Compaction
3.5.6 Thickness
3.5.7 Proof Rolling
3.5.8 Finishing

3.5.9 Smoothness
3.6 TRAFFIC
3.7 MAINTENANCE
3.8 DISPOSAL OF UNSATISFACTORY MATERIALS

-- End of Section Table of Contents --

SECTION 02722

AGGREGATE AND/OR GRADED-CRUSHED AGGREGATE BASE COURSE

PART 1 GENERAL

1.1 REFERENCES

The publications listed below form a part of this specification to the extent referenced. The publications are referred to in the text by basic designation only.

AMERICAN SOCIETY FOR TESTING AND MATERIALS (ASTM)

ASTM C 29/C 29M	(1997) Bulk Density ("Unit Weight") and Voids in Aggregate
ASTM C 88	(1990) Soundness of Aggregates by Use of Sodium Sulfate or Magnesium Sulfate
ASTM C 117	(1995) Materials Finer Than 75 micrometer (No. 200) Sieve in Mineral Aggregates by Washing
ASTM C 127	(1988; R 1993) Specific Gravity and Absorption of Course Aggregate
ASTM C 128	(1993) Specific Gravity and Absorption of Fine Aggregate
ASTM C 131	(1996) Resistance to Degradation of Small-Size Coarse Aggregate by Abrasion and Impact in the Los Angeles Machine
ASTM D 75	(1987; R 1992) Sampling Aggregates
ASTM D 422	(1963; R 1990) Particle-Size Analysis of Soils
ASTM D 2487	(1993) Classification of Soils for Engineering Purposes (Unified Soil Classification System)
ASTM D 2922	(1996) Density of Soil and Soil-Aggregate in Place by Nuclear Methods (Shallow Depth)
ASTM D 3017	(1996) Water Content of Soil and Rock in Place by Nuclear Methods (Shallow Depth)
ASTM D 4318	(1995a) Liquid Limit, Plastic Limit, and Plasticity Index of Soils

1.2 DEFINITIONS

For the purposes of this specification, the following definitions apply.

1.2.1 Graded-crushed Aggregate Base Course

Graded-crushed aggregate (GCA) base course is well graded, crushed, durable aggregate uniformly moistened and mechanically stabilized by compaction as described in MnDOT 2211 and MnDOT 3138. GCA is similar to ABC (aggregate base course), but it has more stringent requirements and it produces a base course with higher strength and stability.

1.2.2 Degree of Compaction

Degree of compaction shall be expressed as a percentage of the maximum density obtained by the test procedure presented in ASTM D 1557.

1.3 SUBMITTALS

Government approval is required for submittals with a "GA" designation; submittals having an "FIO" designation are for information only. The following shall be submitted in accordance with Section 01330 SUBMITTAL PROCEDURES:

SD-01 Data

List of proposed equipment to be used in performance of construction work, including descriptive data.

SD-09 Reports

Sampling and testing; GA. Field Density Tests; GA.

Calibration curves and related test results prior to using the device or equipment being calibrated. Copies of field test results within 24 hours after the tests are performed. Certified copies of test results for approval not less than 30 days before material is required for the work.

SD-18 Records

1.4 SAMPLING AND TESTING

Sampling and testing shall be the responsibility of the Contractor in accordance with MnDOT 2211 Sampling and testing shall be performed by a testing laboratory approved in accordance with Section 01451 CONTRACTOR QUALITY CONTROL. Work requiring testing will not be permitted until the testing laboratory has been inspected and approved. The materials shall be tested to establish compliance with the specified requirements; testing shall be performed at the specified frequency. The Contracting Officer may specify the time and location of the tests. Copies of test results shall be furnished to the Contracting Officer within 24 hours of completion of the tests.

1.4.1 Sampling

Samples for laboratory testing shall be taken in conformance with ASTM D 75. When deemed necessary, the sampling will be observed by the Contracting Officer.

1.4.2 Tests

The following tests shall be performed in conformance with the applicable

standards listed.

1.4.2.1 Sieve Analysis

Sieve analysis shall be made in conformance with ASTM C 117 and ASTM D 422. Sieves shall conform to ASTM E 11 and MnDOT 3138 for aggregate base Class 5.

1.4.2.2 Liquid Limit and Plasticity Index

Liquid limit and plasticity index shall be determined in accordance with ASTM D 4318.

1.4.2.3 Moisture-Density Determinations

The maximum density and optimum moisture content shall be determined in accordance with ASTM D 1557.

1.4.2.4 Field Density Tests

Density shall be field measured in accordance with ASTM D 2922. For the method presented in ASTM D 2922 the calibration curves shall be checked and adjusted if necessary using only the sand cone method as described in paragraph Calibration, of the ASTM publication. Tests performed in accordance with ASTM D 2922 result in a wet unit weight of soil and when using this method, ASTM D 3017 shall be used to determine the moisture content of the soil. The calibration curves furnished with the moisture gauges shall also be checked along with density calibration checks as described in ASTM D 3017. The calibration checks of both the density and moisture gauges shall be made by the prepared containers of material method, as described in paragraph Calibration of ASTM D 2922, on each different type of material being tested at the beginning of a job and at intervals as directed.

1.4.2.5 Wear Test

Wear tests shall be made on GCA course material in conformance with ASTM C 131.

1.4.2.6 Soundness

Soundness tests shall be made on GCA in accordance with ASTM C 88.

1.4.3 Testing Frequency

1.4.3.1 Initial Tests

One of each of the following tests shall be performed on the proposed material prior to commencing construction to demonstrate that the proposed material meets all specified requirements when furnished. If materials from more than one source are going to be utilized, this testing shall be completed for each source.

a. Sieve Analysis including 0.02 mm size material.

b. Liquid limit and plasticity index moisture-density relationship.

c. Moisture-density relationship.

d. Wear.

e. Soundness.

1.4.3.2 In Place Tests

One of each of the following tests shall be performed on samples taken from the placed and compacted GCA. Samples shall be taken and tested at the rates indicated.

a. Density tests shall be performed on every lift of material placed and at a frequency of one set of tests for every 250 square meters, or portion thereof, of completed area.

b. Sieve Analysis including 0.02 mm size materialshall be performed for every 500 metric tons, or portion thereof, of material placed.

c. Liquid limit and plasticity index tests shall be performed at the same frequency as the sieve analysis.

1.4.4 Approval of Material

The source of the material shall be selected 10 days prior to the time the material will be required in the work. Tentative approval of material will be based on initial test results. Final approval of the materials will be based on sieve analysis, liquid limit, and plasticity index tests performed on samples taken from the completed and fully compacted GCA.

1.5 WEATHER LIMITATIONS

Construction shall be done when the atmospheric temperature is above2 degrees C. When the temperature falls below2 degrees C, the Contractor shall protect all completed areas by approved methods against detrimental effects of freezing. Completed areas damaged by freezing, rainfall, or other weather conditions shall be corrected to meet specified requirements.

1.6 PLANT, EQUIPMENT, AND TOOLS

All plant, equipment, and tools used in the performance of the work will be subject to approval before the work is started and shall be maintained in satisfactory working condition at all times. The equipment shall be adequate and shall have the capability of producing the required compaction, meeting grade controls, thickness control, and smoothness requirements as set forth herein.

PART 2 PRODUCTS

2.1 AGGREGATES

The GCA shall consist of clean, sound, durable particles of crushed stone, crushed slag, crushed gravel, crushed recycled concrete, angular sand, or other approved material in accordance with MnDOT 2211 and MnDOT 3138. GCA shall be free of silt and clay as defined by ASTM D 2487, organic matter, and other objectionable materials or coatings. The portion retained on the 4.75 mm sieve shall be known as coarse aggregate; that portion passing the 4.75 mm sieve shall be known as fine aggregate.

2.1.1 Coarse Aggregate

Coarse aggregates shall be angular particles of uniform density. When the coarse aggregate is supplied from more than one source, aggregate from each source shall meet the specified requirements and shall be stockpiled separately.

a. Crushed Gravel: Crushed gravel shall be manufactured by crushing gravels, and shall meet all the requirements specified below.

b. Crushed Stone: Crushed stone shall consist of freshly mined quarry rock, and shall meet all the requirements specified below.

c. Crushed Recycled Concrete: Crushed recycled concrete shall consist of previously hardened portland cement concrete or other concrete containing pozzolanic binder material. The recycled material shall be free of all reinforcing steel, bituminous concrete surfacing, and any other foreign material and shall be crushed and processed to meet the required gradations for coarse aggregate. Crushed recycled concrete shall meet all other applicable requirements specified below.

d. Crushed Slag: Crushed slag shall be an air-cooled blast-furnace product having an air dry unit weight of not less than1045 kg/cubic meteras determined by ASTM C 29/C 29M, and shall meet all the requirements specified below.

2.1.1.1 Graded-Crushed Aggregate Base Course

GCA coarse aggregate shall not show more than 40 percent loss when subjected to the Los Angeles abrasion test in accordance with ASTM C 131. GCA coarse aggregate shall not exhibit a loss greater than 40 percent weighted average, at five cycles, when tested for soundness in magnesium sulfate in accordance with ASTM C 88. The amount of flat and elongated particles shall not exceed 20 percent for the fraction retained on the19 mm sieve nor 20 percent for the fraction passing the19 mm sieve. A flat particle is one having a ratio of width to thickness greater than 3; an elongated particle is one having a ratio of length to width greater than 3. In the portion retained on each sieve specified, the crushed aggregate shall contain at least 90 percent by weight of crushed pieces having two or more freshly fractured faces with the area of each face being at least equal to 75 percent of the smallest midsectional area of the piece. When two fractures are contiguous, the angle between planes of the fractures must be at least 30 degrees in order to count as two fractured faces. Crushed gravel shall be manufactured from gravel particles 90 percent of which by weight are retained on the maximum size sieve listed in TABLE 1.

2.1.2 Fine Aggregate

Fine aggregates shall be angular particles of uniform density. When the fine aggregate is supplied from more than one source, aggregate from each source shall meet the specified requirements.

2.1.2.1 Graded-Crushed Aggregate Base Course

GCA fine aggregate shall consist of angular particles produced by crushing stone, slag, recycled concrete, or gravel that meets the requirements for wear and soundness specified for GCA coarse aggregate. Fine aggregate shall be produced by crushing only particles larger than 4.75 mm sieve in size. The fine aggregate shall contain at least 90 percent by weight of particles having two or more freshly fractured faces in the portion passing the 4.75 mm sieve and retained on the 2 mm sieve, and in the portion

passing the 2 mm sieve and retained on the 0.425 mm sieve. Fine aggregate shall be manufactured from gravel particles 95 percent of which by weight are retained on the 19 mm sieve.

2.1.3 Gradation Requirements

The specified gradation requirements shall apply to the completed base course. The aggregates shall have a maximum size of 19 mm and shall be continuously well graded within the limits specified in TABLE 1. Sieves shall conform to ASTM E 11 and MnDOT 3138 for aggregate base Class 5.

NOTE 1: Particles having diameters less than 0.02 mm shall not be in excess of 3 percent by weight of the total sample tested.

NOTE 2: The values are based on aggregates of uniform specific gravity. If materials from different sources are used for the coarse and fine aggregates, they shall be tested in accordance with ASTM C 127 and ASTM C 128 to determine their specific gravities. If the specific gravities vary by more than 10 percent, the percentages passing the various sieves shall be corrected as directed by the Contracting Officer.

2.1.4 Liquid Limit and Plasticity Index

Liquid limit and plasticity index requirements shall apply to the completed course and shall also apply to any component that is blended to meet the required gradation. The portion of any component or of the completed course passing the 0.425 mm sieve shall be either nonplastic or have a liquid limit not greater than 25 and a plasticity index not greater than 5.

PART 3 EXECUTION

3.1 GENERAL REQUIREMENTS

When the GCA is constructed in more than one layer, the previously constructed layer shall be cleaned of loose and foreign matter by sweeping with power sweepers or power brooms, except that hand brooms may be used in areas where power cleaning is not practicable. Adequate drainage shall be provided during the entire period of construction to prevent water from collecting or standing on the working area. Line and grade stakes shall be provided as necessary for control. Grade stakes shall be in lines parallel to the centerline of the area under construction and suitably spaced for string lining.

3.2 OPERATION OF AGGREGATE SOURCES

Aggregates shall be obtained from offsite sources.

3.3 STOCKPILING MATERIAL

Prior to stockpiling of material, storage sites shall be cleared and leveled by the Contractor. All materials, including approved material available from excavation and grading, shall be stockpiled in the manner and at the locations designated. Aggregates shall be stockpiled on the cleared and leveled areas designated by the Contracting Officer to prevent segregation. Materials obtained from different sources shall be stockpiled separately.

3.4 PREPARATION OF UNDERLYING COURSE

Prior to constructing the GCA, the underlying course or subgrade shall be cleaned of all foreign substances. At the time of construction of the GCA, the underlying course shall contain no frozen material. The surface of the underlying course or subgrade shall meet specified compaction and surface tolerances as specified in MnDOT 2112. The underlying course shall conform to Section 02300 EARTHWORK. Ruts or soft yielding spots in the underlying courses, areas having inadequate compaction, and deviations of the surface from the requirements set forth herein shall be corrected by loosening and removing soft or unsatisfactory material and by adding approved material, reshaping to line and grade, and recompacting to specified density requirements. For cohesionless underlying courses containing sands or gravels, as defined in ASTM D 2487, the surface shall be stabilized prior to placement of the GCA. Stabilization shall be accomplished by mixing GCA into the underlying course and compacting by approved methods. The stabilized material shall be considered as part of the underlying course and shall meet all requirements of the underlying course. The finished underlying course shall not be disturbed by traffic or other operations and shall be maintained by the Contractor in a satisfactory condition until theGCA is placed.

3.5 INSTALLATION

3.5.1 Mixing the Materials

The coarse and fine aggregates shall be mixed in a stationary plant, or in a traveling plant or bucket loader on an approved paved working area. The Contractor shall make adjustments in mixing procedures or in equipment as directed to obtain true grades, to minimize segregation or degradation, to obtain the required water content, and to insure a satisfactory GCAmeeting all requirements of this specification.

3.5.2 Placing

The mixed material shall be placed on the prepared subgrade or subbase in layers of uniform thickness with an approved spreader. When a compacted layer 150 mm or less in thickness is required, the material shall be placed in a single layer. When a compacted layer in excess of 150 mm is required, the material shall be placed in layers of equal thickness. No layer shall exceed 150 mm or less than 75 mm when compacted. The layers shall be so placed that when compacted they will be true to the grades or levels required with the least possible surface disturbance. Where the GCA is placed in more than one layer, the previously constructed layers shall be cleaned of loose and foreign matter by sweeping with power sweepers, power brooms, or hand brooms, as directed. Such adjustments in placing procedures or equipment shall be made as may be directed to obtain true grades, to minimize segregation and degradation, to adjust the water content, and to insure an acceptable GCA.

3.5.3 Grade Control

The finished and completed GCA shall conform to the lines, grades, and cross sections shown. Underlying material(s) shall be excavated and prepared at sufficient depth for the requiredGCA thickness so that the finished GCA with the subsequent surface course will meet the designated grades.

3.5.4 Edges of Base Course

TheGCA shall be placed so that the completed section will be a minimum of

wider, on all sides, than the next layer that will be placed above it. Additionally, approved fill material shall be placed along the outer edges of GCA in sufficient quantities to compact to the thickness of the course being constructed, or to the thickness of each layer in a multiple layer course, allowing in each operation at least a 600 mm width of this material to be rolled and compacted simultaneously with rolling and compacting of each layer of GCA. If this base course material is to be placed adjacent to another pavement section, then the layers for both of these sections shall be placed and compacted along this edge at the same time.

3.5.5 Compaction

Each layer of the GCA shall be compacted as specified with approved compaction equipment. Water content shall be maintained during the compaction procedure to within plus or minus 10 percent of the optimum water content determined from laboratory tests as specified in paragraph SAMPLING AND TESTING. Rolling shall begin at the outside edge of the surface and proceed to the center, overlapping on successive trips at least one-half the width of the roller. Alternate trips of the roller shall be slightly different lengths. Speed of the roller shall be such that displacement of the aggregate does not occur. In all places not accessible to the rollers, the mixture shall be compacted with hand-operated power tampers. Compaction shall continue until each layer has a degree of compaction that is at least 100 percent of laboratory maximum density through the full depth of the layer. The Contractor shall make such adjustments in compacting or finishing procedures as may be directed to obtain true grades, to minimize segregation and degradation, to reduce or increase water content, and to ensure a satisfactory GCA. Any materials that are found to be unsatisfactory shall be removed and replaced with satisfactory material or reworked, as directed, to meet the requirements of this specification.

3.5.6 Thickness

Compacted thickness of the aggregate course shall be as indicated. No individual layer shall exceed 200 mm nor be less than 75 mm in compacted thickness. The total compacted thickness of the GCA course shall be within 13 mm of the thickness indicated. Where the measured thickness is more than 13 mm deficient, such areas shall be corrected by scarifying, adding new material of proper gradation, reblading, and recompacting as directed. Where the measured thickness is more than 13 mm thicker than indicated, the course shall be considered as conforming to the specified thickness requirements. Average job thickness shall be the average of all thickness measurements taken for the job, but shall be within 6 mm of the thickness indicated. The total thickness of theGCA course shall be measured at intervals in such a manner as to ensure one measurement for each 500 squaremeters of base course. Measurements shall be made in 75 mm diameter test holes penetrating the base course.

3.5.7 Proof Rolling

Proof rolling of the areas indicated shall be in addition to the compaction specified and shall consist of the application of 30 coverages with a heavy pneumatic-tired roller having four or more tires, each loaded to a minimum of 13,600 kg and inflated to a minimum of 1035 kPa. In areas designated, proof rolling shall be applied to the top of the underlying material on which GCA is laid and to each layer of GCA. Water content of the underlying material shall be maintained at optimum or at the percentage directed from start of compaction to completion of proof rolling of that

layer. Water content of each layer of the GCA shall be maintained at the optimum percentage directed from start of compaction to completion of proof rolling. Any GCA materials or any underlying materials that produce unsatisfactory results by proof rolling shall be removed and replaced with satisfactory materials, recompacted and proof rolled to meet these specifications.

3.5.8 Finishing

The surface of the top layer of GCA shall be finished after final compactionandproof rolling by cutting any overbuild to grade and rolling with a steel-wheeled roller. Thin layers of material shall not be added to the top layer of base course to meet grade. If the elevation of the top layer of GCA is 13 mm or more below grade, then the top layer should be scarified to a depth of at least 75 mm and new material shall be blended in , compacted and proof rolled to bring to grade. Adjustments to rolling and finishing procedures shall be made as directed to minimize segregation and degradation, obtain grades, maintain moisture content, and insure an acceptable base course. Should the surface become rough, corrugated, uneven in texture, or traffic marked prior to completion, the unsatisfactory portion shall be scarified, reworked and recompacted or it shall be replaced as directed.

3.5.9 Smoothness

The surface of the top layer shall show no deviations in excess of 10 mm when tested with a meter straightedge. Measurements shall be taken in successive positions parallel to the centerline of the area to be paved. Measurements shall also be taken perpendicular to the centerline at 15 meter intervals. Deviations exceeding this amount shall be corrected by removing material and replacing with new material, or by reworking existing material and compacting it to meet these specifications.

3.6 TRAFFIC

Traffic shall not be allowed on the completed GCA course.

3.7 MAINTENANCE

The GCA shall be maintained in a satisfactory condition until the full pavement section is completed and accepted. Maintenance shall include immediate repairs to any defects and shall be repeated as often as necessary to keep the area intact. Any GCA that is not paved over prior to the onset of winter, shall be retested to verify that it still complies with the requirements of this specification. Any area of GCA that is damaged shall be reworked or replaced as necessary to comply with this specification.

3.8 DISPOSAL OF UNSATISFACTORY MATERIALS

Any unsuitable materials that must be removed shall be disposed of as directed. No additional payments will be made for materials that must be replaced.

-- End of Section --

SECTION TABLE OF CONTENTS

DIVISION 02 - SITE WORK

SECTION 02741

BITUMINOUS PAVING FOR ROADS, STREETS AND OPEN STORAGE AREAS

PART 1 GENERAL

1.1 REFERENCES
1.2 Bituminous Paving Bituminous paving shall consist of paving driveways and parking lots where indicated in accordance with MnDOT 2331.
1.3 WEATHER LIMITATIONS
1.4 PROTECTION OF PAVEMENT
1.5 GRADE AND SURFACE-SMOOTHNESS REQUIREMENTS
1.5.1 Surface Smoothness
1.6 SAMPLING AND TESTING
1.6.1 Aggregates
1.6.2 Bituminous Mixtures

PART 2 PRODUCTS

2.1 BITUMINOUS HOT MIX
2.1.1 Aggregates
2.1.1.1 Coarse Aggregate
2.1.1.2 Fine Aggregate
2.1.1.3 Mineral Filler
2.1.2 Bituminous Material
2.1.3 Additives
2.2 PROPORTIONING OF MIXTURE
2.2.1 Job Mix Formula
2.2.2 Test Properties of Bituminous Mixtures
2.2.2.1 Stability, Flow, and Voids
2.2.2.2 Stability

PART 3 EXECUTION

3.1 BASE COURSE CONDITIONING
3.2 EXISTING PAVEMENT CONDITIONING
3.3 PREPARATION OF BITUMINOUS MIXTURES
3.4 WATER CONTENT OF AGGREGATES
3.5 STORAGE OF BITUMINOUS PAVING MIXTURE
3.6 TRANSPORTATION OF BITUMINOUS MIXTURE
3.7 SURFACE PREPARATION OF UNDERLYING COURSE
3.8 TACK COATING
3.9 PLACING
3.9.1 Handspreading in Lieu of Machine Spreading
3.10 COMPACTION OF MIXTURE
3.10.1 Correcting Deficient Areas
3.11 JOINTS
3.11.1 General

-- End of Section Table of Contents --

SECTION 02741

BITUMINOUS PAVING FOR ROADS, STREETS AND OPEN STORAGE AREAS

PART 1 GENERAL

1.1 REFERENCES

The publications listed below form a part of this specification to the extent referenced. The publications are referred to in the text by basic designation only.

AMERICAN SOCIETY FOR TESTING AND MATERIALS (ASTM)

ASTM C 29/C 29M	(1997) Bulk Density (Unit Weight) and Voids in Aggregate
ASTM C 127	(1988; R 1993) Specific Gravity and Absorption of Coarse Aggregate
ASTM C 128	(1993) Specific Gravity and Absorption of Fine Aggregate
ASTM C 131	(1996) Resistance to Degradation of Small-Size Coarse Aggregate by Abrasion and Impact in the Los Angeles Machine
ASTM D 242	(1995) Mineral Filler for Bituminous Paving Mixtures
ASTM D 422	(1963; R 1990) Particle-Size Analysis of Soils
ASTM D 2041	(1995) Theoretical Maximum Specific Gravity and Density of Bituminous Paving Mixtures
ASTM D 2216	(1992) Laboratory Determination of Water (Moisture) Content of Soil and Rock
ASTM D 3515	(1996) Hot-Mixed, Hot-Laid Bituminous Paving Mixtures
ASTM D 4791	(1995) Flat Particles, Elongated Particles, or Flat and Elongated Particles in Coarse Aggregate

1.2 Bituminous Paving

Bituminous paving shall consist of paving driveways and parking lots where indicated in accordance with MnDOT 2331.

1.3 WEATHER LIMITATIONS

Unless otherwise directed, bituminous courses shall not be constructed when temperature of the surface of the existing pavement or base course is below 5 degrees C.

1.4 PROTECTION OF PAVEMENT

After final rolling, no vehicular traffic of any kind shall be permitted on the pavement until the pavement has cooled to 60 degrees C.

1.5 GRADE AND SURFACE-SMOOTHNESS REQUIREMENTS

Finished surface of bituminous courses, when tested as specified below and in paragraph ACCEPTABILITY OF WORK, shall conform to gradeline and elevations shown and to surface-smoothness requirements specified.

1.5.1 Surface Smoothness

When a 3.66 m straightedge is laid on the surface parallel with the centerline of the paved area or transverse from crown to pavement edge, the surface shall vary not more than 6.4 mm from the straightedge.

1.6 SAMPLING AND TESTING

1.6.1 Aggregates

Sampling and testing of aggregates will be accomplished by the Contracting Officer in accordance with MnDOT 3139.

1.6.2 Bituminous Mixtures

Sampling and testing of bituminous mixtures will be accomplished by the Contracting Officer in accordance with MnDOT 3151.

PART 2 PRODUCTS

2.1 BITUMINOUS HOT MIX

Bituminous hot mix shall consist of coarse aggregate, fine aggregate, mineral filler, bituminous material, and approved additives, if required, of the qualities and in the proportions specified and shall conform to the requirements contained in paragraphs PROPORTIONING OF MIXTURE and ACCEPTABILITY OF WORK and MnDOT 2331.

2.1.1 Aggregates

Aggregates shall consist of crushed stone, crushed gravel, crushed slag, screening, sand, and mineral filler, as required. The portion of materials retained on the 4.75 mm sieve shall be known as coarse aggregate, the portion passing the 4.75 mm sieve and retained on the 0.075 mm sieve as fine aggregate, and the portion passing the 0.075 mm sieve as mineral filler. Aggregate gradation shall conform to gradation(s) specified in TABLE I. TABLE I is based on aggregates of uniform specific gravity; the percentage passing various sieves may be changed by the Contracting Officer when aggregates of varying specific gravities are used. Adjustments of percentage passing various sieves may be changed by the Contracting Officer when aggregates vary by more than 0.2 in specific gravity.

TABLE I. AGGREGATE GRADATION

Sieve Size	Wearing Course, Percent Passing	Base Course, Percent Passing
37.5 mm	100	100
19.0 mm	100	100
12.5 mm	100	100
4.75 mm	40-85	40-85
0.075 mm	2-8	2-8

2.1.1.1 Coarse Aggregate

Coarse aggregate shall consist of clean, sound, durable particles meeting the following requirements.

a. Percentage of loss shall not exceed 40 after 500 revolutions, as determined in accordance with ASTM C 131.

c. The dry weight of crushed slag shall not be less than 1200 kg/cubic m, as determined in accordance with ASTM C 29/C 29M.

d. Crushed gravel retained on the 4.75 mm sieve and each coarser sieve shall contain at least 75 percent by weight of crushed pieces having one or more fractured faces with the area of each face equal to at least 75 percent of the smallest midsectional area of piece. When two fractures are contiguous, the angle between planes of fractures shall be at least 30 degrees to count as two fractured faces.

e. Particle shape of crushed aggregates shall be essentially cubical. The quantity of flat and elongated particles in any sieve size shall not exceed 20 percent by weight, when determined in accordance with ASTM D 4791.

2.1.1.2 Fine Aggregate

Fine aggregate shall consist of clean, sound, durable particles, including natural sand or crushed stone, slag, or gravel that meets requirements for wear and soundness specified for coarse aggregate. Fine aggregate produced by crushing gravel shall have at least 90 percent by weight of crushed particles having two or more fractured faces in the portion retained on the 19 mm sieve. This requirement shall apply to the material before blending with natural sand when blending is necessary. Quantity of natural sand to be added to the wearing- and base-course mixtures shall not exceed 25 percent by weight of coarse and fine aggregate and material passing the 0.075 mm sieve. Natural sand shall be clean and free from clay and organic matter.

2.1.1.3 Mineral Filler

Mineral filler shall conform to ASTM D 242.

Grain size in mm	Percent Finer
0.05	70-100
0.02	35-65

Grain size in mm	Percent Finer
0.005	10-22

Grain size shall be determined in accordance with ASTM D 422.

2.1.2 Bituminous Material

Asphalt cement shall conform to ASTM D 2170, Grade AC-10.

2.1.3 Additives

The use of additives such as antistripping and antifoaming agents is subject to approval.

2.2 PROPORTIONING OF MIXTURE

2.2.1 Job Mix Formula

The JMF for the bituminous mixture will be furnished the Contractor by the Contracting Officer. The Contractor shall furnish samples of materials for mix design. Blending of the aggregates will be accomplished by the Government. No payment will be made for mixtures produced prior to the approval of the JMF. The formula will indicate the percentage of each stockpile and mineral filler, the percentage of each size aggregate, the percentage of bitumen, and the temperature of the completed mixture when discharged from the mixer. Tolerances are given in TABLE II for asphalt content, temperature, and aggregate grading for tests conducted on the mix as discharged from the mixing plant; however, the final evaluation of aggregate gradation and asphalt content will be in accordance with MnDOT 2331. Bituminous mix that deviates more than 14 degrees C from the JMF shall be rejected. The JMF may be adjusted during construction to improve paving mixtures, as directed, without adjustments in the contract unit prices.

2.2.2 Test Properties of Bituminous Mixtures

Finished mixture shall meet requirements described below when tested in accordance with . All samples will be compacted with 50 blows of specified hammer on each side of sample. When bituminous mixture fails to meet the requirements specified below, the paving operation shall be stopped until the cause of noncompliance is determined and corrected.

2.2.2.1 Stability, Flow, and Voids

Requirements for stability, flow, and voids are shown in TABLES III and IV for nonabsorptive and absorptive aggregates, respectively.

(1) The Contracting Officer may permit deviations from limits specified when gyratory method of design is used to develop the JMF.

(2) The Contracting Officer may permit deviation from limits specified for voids filled with bitumen in the intermediate course in order to stay within limits for percent voids total mix.

(1) The Contracting Officer may permit deviations from limits specified when gyratory method of design is used to develop the JMF.

(2) The Contracting Officer may permit deviation from limits specified for voids filled with bitumen in the intermediate course in order to stay within limits for percent voids total mix.

a. When the water-absorption value of the entire blend of aggregate does not exceed 2.5 percent as determined in accordance with ASTM C 127 and ASTM C 128, the aggregate is designated as nonabsorptive. The theoretical specific gravity computed from the apparent specific gravity or ASTM D 2041 will be used in computing voids total mix and voids filled with bitumen, and the mixture shall meet requirements in TABLE III.

b. When the water-absorption value of the entire blend of aggregate exceeds 2.5 percent as determined in accordance with ASTM C 127 and ASTM C 128, the aggregate is designated as absorptive. The theoretical specific gravity computed from the bulk-impregnated specific gravity method contained in ASTM D 2041 shall be used in computing percentages of voids total mix and voids filled with bitumen; the mixture shall meet requirements in TABLE IV.

2.2.2.2 Stability

The index of retained stability must be greater than 75 percent as determined by ASTM D 2041. When the index of retained stability is less than 75, the aggregate stripping tendencies may be countered by the use of hydrated lime or by treating the bitumen with an approved antistripping agent. The hydrated lime is considered as mineral filler and should be considered in the gradation requirements. The amount of hydrated lime or antistripping agent added to bitumen shall be sufficient, as approved, to produce an index of retained stability of not less than 75 percent. No additional payment will be made to the Contractor for addition of antistripping agent required.

PART 3 EXECUTION

3.1 BASE COURSE CONDITIONING

The surface of the base course will be inspected for adequate compaction and surface tolerances as specified. Unsatisfactory areas shall be corrected.

3.2 EXISTING PAVEMENT CONDITIONING

3.3 PREPARATION OF BITUMINOUS MIXTURES

Rates of feed of aggregates shall be regulated so that the moisture content and temperature of aggregates will be within specified tolerances. Aggregates, mineral filler, and bitumen shall be conveyed into the mixer in proportionate quantities required to meet the JMF. Mixing time shall be as required to obtain a uniform coating of the aggregate with the bituminous material. Temperature of bitumen at time of mixing shall not exceed 150 degrees C. Temperature of aggregate and mineral filler in the mixer shall not exceed 160 degrees C when bitumen is added. Overheated and carbonized mixtures or mixtures that foam shall not be used.

3.4 WATER CONTENT OF AGGREGATES

Drying operations shall reduce the water content of mixture to less than 0.75 percent. The water content test will be conducted in accordance with

ASTM D 2216; the weight of the sample shall be at least 500 grams. If the water content is determined on hot bin samples, the water content will be a weighted average based on composition of blend.

3.5 STORAGE OF BITUMINOUS PAVING MIXTURE

Storage shall conform to the applicable requirements of ASTM D 3515; however, in no case shall the mixture be stored for more than 4 hours.

3.6 TRANSPORTATION OF BITUMINOUS MIXTURE

Transportation from paving plant to site shall be in trucks having tight, clean, smooth beds lightly coated with an approved releasing agent to prevent adhesion of the mixture to the truck bodies. Excessive releasing agent shall be drained prior to loading. Each load shall be covered with canvas or other approved material of ample size to protect mixture from weather and to prevent loss of heat. Loads that have crusts of cold, unworkable material or that have become wet will be rejected. Hauling over freshly placed material will not be permitted.

3.7 SURFACE PREPARATION OF UNDERLYING COURSE

Prior to placing of the intermediate or wearing course, the underlying course shall be cleaned of all foreign or objectionable matter with power brooms and hand brooms.

3.8 TACK COATING

Contact surfaces of previously constructed pavement, curbs, manholes, and other structures shall be sprayed with a thin coat of bituminous material conforming to
ASTM D 2170, Grade AC-10 in accordance with MnDOT 2357.

3.9 PLACING

Bituminous courses shall be constructed only when the base course or existing pavement has no free water on the surface. Bituminous mixtures shall not be placed without ample time to complete spreading and rolling during daylight hours, unless approved satisfactory artificial lighting is provided.

3.9.1 Handspreading in Lieu of Machine Spreading

In areas where the use of machine spreading is impractical, the mixture shall be spread by hand. Spreading shall be in a manner to prevent segregation. The mixture shall be spread uniformly with hot rakes in a loose layer of thickness that, when compacted, will conform to required grade, density, and thickness.

3.10 COMPACTION OF MIXTURE

Rolling shall begin as soon after placing as the mixture will bear a roller without undue displacement. Delays in rolling freshly spread mixture will not be permitted. After initial rolling, preliminary tests of crown, grade, and smoothness shall be made by the Contractor. Deficiencies shall be corrected so that the finished course will conform to requirements for grade and smoothness specified herein. Crown, grade, and smoothness will be checked in each lot of completed pavement by the Contracting Officer for compliance and will be evaluated as specified in paragraph ACCEPTABILITY OF

WORK. After the Contractor is assured of meeting crown, grade, and smoothness requirements, rolling shall be continued until a mat density of 97.0 to 100.0 percent and a joint density of 95.0 to 100.0 percent of density of laboratory-compacted specimens of the same mixture is obtained. The density will be determined and evaluated as specified in paragraph ACCEPTABILITY OF WORK. Places inaccessible to rollers shall be thoroughly compacted with hot hand tampers.

3.10.1 Correcting Deficient Areas

Mixtures that become contaminated or are defective shall be removed to the full thickness of the course. Edges of the area to be removed shall be cut so that sides are perpendicular and parallel to the direction of traffic and so that the edges are vertical. Edges shall be sprayed with bituminous materials conforming to

ASTM D 2170, Grade AC-10. Fresh paving mixture shall be placed in the excavated areas in sufficient quantity so that the finished surface will conform to grade and smoothness requirements. Paving mixture shall be compacted to the density specified herein. Skin patching of an area that has been rolled shall not be permitted.

3.11 JOINTS

3.11.1 General

Joints between old and new pavements, between successive work days, or joints that have become cold (less than) shall be made to ensure continuous bond between the old and new sections of the course. All joints shall have the same texture and smoothness as other sections of the course. Contact surfaces of previously constructed pavements coated by dust, sand, or other objectionable material shall be cleaned by brushing or shall be cut back as directed. When directed by the Contracting Officer, the surface against which new material is placed shall be sprayed with a thin, uniform coat of bituminous material conforming to ASTM D 2170, Grade AC-10 Material shall be applied far enough in advance of placement of a fresh mixture to ensure adequate curing. Care shall be taken to prevent damage or contamination of the sprayed surface.

-- End of Section --

SECTION TABLE OF CONTENTS

DIVISION 02 - SITE WORK

SECTION 02748

BITUMINOUS TACK COAT

PART 1 GENERAL

1.1 REFERENCES
1.2 SUBMITTALS
1.3 PLANT, EQUIPMENT, MACHINES AND TOOLS
1.3.1 General Requirements
1.3.2 Bituminous Distributor
1.3.3 Power Brooms and Power Blowers
1.4 WEATHER LIMITATIONS

PART 2 PRODUCTS

2.1 TACK COAT

PART 3 EXECUTION

3.1 PREPARATION OF SURFACE
3.2 APPLICATION RATE
3.2.1 Tack Coat
3.3 APPLICATION TEMPERATURE
3.3.1 Viscosity Relationship
3.3.2 Temperature Ranges
3.4 APPLICATION
3.5 CURING PERIOD
3.6 FIELD QUALITY CONTROL
3.7 SAMPLING AND TESTING
3.7.1 Sampling
3.7.2 Calibration Test
3.7.3 Trial Applications
3.7.3.1 Tack Coat Trial Application Rate
3.7.4 Sampling and Testing During Construction

-- End of Section Table of Contents --

SECTION 02748

BITUMINOUS TACK COAT

PART 1 GENERAL

1.1 REFERENCES

The publications listed below form a part of this specification to the extent referenced. The publications are referred to in the text by basic designation only.

AMERICAN ASSOCIATION OF STATE HIGHWAY AND TRANSPORTATION OFFICIALS (AASHTO)

AASHTO T 40	(1978; R 1983) Sampling Bituminous Materials

AMERICAN SOCIETY OF TESTING AND MATERIALS (ASTM)

ASTM D 140	(1993) Sampling Bituminous Materials
ASTM D 2995	(1993) Determining Application Rate of Bituminous Distributors

1.2 SUBMITTALS

Government approval is required for submittals with a "GA" designation; submittals having an "FIO" designation are for information only. The following shall be submitted in accordance with Section 01330 SUBMITTAL PROCEDURES:

SD-09 Reports

Tests; FIO.

Copies of all test results for bituminous materials, within 24 hours of completion of tests. Certified copies of the manufacturer's test reports indicating compliance with applicable specified requirements, not less than 30 days before the material is required in the work.

SD-18 Records

Waybills and Delivery Tickets; FIO.

Waybills and delivery tickets, during progress of the work.

1.3 PLANT, EQUIPMENT, MACHINES AND TOOLS

1.3.1 General Requirements

Plant, equipment, machines and tools used in the work shall be subject to approval and shall be maintained in a satisfactory working condition at all

times.

1.3.2 Bituminous Distributor

The distributor shall have pneumatic tires of such size and number to prevent rutting, shoving or otherwise damaging the base surface or other layers in the pavement structure. The distributor shall be designed and equipped to spray the bituminous material in a uniform coverage at the specified temperature, at readily determined and controlled rates with an allowable variation from the specified rate of not more than plus or minus 5 percent, and at variable widths. Distributor equipment shall include a separate power unit for the bitumen pump, full-circulation spray bars, tachometer, pressure gauges, volume-measuring devices, adequate heaters for heating of materials to the proper application temperature, a thermometer for reading the temperature of tank contents, and a hand hose attachment suitable for applying bituminous material manually to areas inaccessible to the distributor. The distributor shall be equipped to circulate and agitate the bituminous material during the heating process.

1.3.3 Power Brooms and Power Blowers

Power brooms and power blowers shall be suitable for cleaning the surfaces to which the bituminous coat is to be applied.

1.4 WEATHER LIMITATIONS

Bituminous coat shall be applied only when the surface to receive the bituminous coat is dry. Bituminous coat shall be applied only when the atmospheric temperature in the shade is 10 degrees C or above and when the temperature has not been below 2 degrees C for the 12 hours prior to application.

PART 2 PRODUCTS

2.1 TACK COAT

Asphalt shall conform to MnDOT 2357, MC-250, 800.

PART 3 EXECUTION

3.1 PREPARATION OF SURFACE

Immediately before applying the bituminous coat, all loose material, dirt, clay, or other objectionable material shall be removed from the surface to be treated. The surface shall be dry and clean at the time of treatment in accordance with MnDOT 2357.

3.2 APPLICATION RATE

The exact quantities within the range specified, which may be varied to suit field conditions, will be determined by the Contracting Officer.

3.2.1 Tack Coat

Bituminous material for the tack coat shall be applied in quantities of not less than 0.20 liter nor more than 0.70 liter per square meter of pavement surface.

3.3 APPLICATION TEMPERATURE

3.3.1 Viscosity Relationship

Asphalt application temperature shall provide an application viscosity between 10 and 60 seconds, Saybolt Furol, or between 20 and 120 square mm/sec, kinematic. The temperature viscosity relation shall be furnished to the Contracting Officer.

3.3.2 Temperature Ranges

The viscosity requirements shall determine the application temperature to be used. The following is a normal range of application temperatures:

*These temperature ranges exceed the flash point of the material and care should be taken in their heating.

3.4 APPLICATION

Following preparation and subsequent inspection of the surface, the bituminous coat shall be applied at the specified rate with uniform distribution over the surface to be treated. All areas and spots missed by the distributor shall be properly treated with the hand spray. Until the succeeding layer of pavement is placed, the surface shall be maintained by protecting the surface against damage and by repairing deficient areas at no additional cost to the Government. If required, clean dry sand shall be spread to effectively blot up any excess bituminous material. No smoking, fires, or flames other than those from the heaters that are a part of the equipment shall be permitted within 8 meters of heating, distributing, and transferring operations of bituminous material other than bituminous emulsions.

3.5 CURING PERIOD

Following application of the bituminous material and prior to application of the succeeding layer of pavement, the bituminous coat shall be allowed to cure and to obtain evaporation of any volatiles or moisture.

3.6 FIELD QUALITY CONTROL

Samples of the bituminous material shall be tested for compliance in accordance with MnDOT 2357.

3.7 SAMPLING AND TESTING

Sampling and testing shall be performed by an approved commercial testing laboratory or by facilities furnished by the Contractor. No work requiring testing will be permitted until the facilities have been inspected and approved.

3.7.1 Sampling

The samples of bituminous material, unless otherwise specified, shall be in accordance with MnDOT 2357 and ASTM D 140 or AASHTO T 40. Sources from which bituminous materials are to be obtained shall be selected and notification furnished the Contracting Officer within 15 days after the award of the contract.

3.7.2 Calibration Test

The Contractor shall furnish all equipment, materials, and labor necessary to calibrate the bituminous distributor. Calibration shall be made with the approved job material and prior to applying the bituminous coat material to the prepared surface. Calibration of the bituminous distributor shall be in accordance with ASTM D 2995.

3.7.3 Trial Applications

Before providing the complete bituminous coat, three lengths of at least 30 meters for the full width of the distributor bar shall be applied to evaluate the amount of bituminous material that can be satisfactorily applied.

3.7.3.1 Tack Coat Trial Application Rate

Unless otherwise authorized, the trial application rate of bituminous tack coat materials shall be applied in the amount of 0.20 liters per square meter. Other trial applications shall be made using various amounts of material as may be deemed necessary.

3.7.4 Sampling and Testing During Construction

Quality control sampling and testing shall be performed as required in MnDOT 2357.

-- End of Section --

SECTION TABLE OF CONTENTS

DIVISION 02 - SITE WORK

SECTION 02763

PAVEMENT MARKINGS

04/01

PART 1 GENERAL

1.1 REFERENCES
1.2 SUBMITTALS
1.3 DELIVERY AND STORAGE
1.4 EQUIPMENT
1.4.1 Paint Application Equipment
1.4.2 Thermoplastic Application Equipment
1.4.2.1 Thermoplastic Material
1.4.2.2 Application Equipment
1.4.2.3 Mobile and Maneuverable
1.4.3 Reflective Media Dispenser

PART 2 PRODUCTS

2.1 PAINT
2.2 THERMOPLASTIC COMPOUNDS
2.2.1 Composition Requirements
2.2.2 Physical Properties
2.2.2.1 Color
2.2.2.2 Drying Time
2.2.2.3 Softening Point
2.2.2.4 Specific Gravity
2.2.3 Asphalt Concrete Primer
2.2.4 Portland Cement Concrete Primer
2.3 [Enter Appropriate Subpart Title Here]
2.4 REFLECTIVE MEDIA

PART 3 EXECUTION

3.1 SURFACE PREPARATION
3.1.1 Pretreatment for Early Painting
3.1.2 Cleaning Existing Pavement Markings
3.1.3 Cleaning Concrete Curing Compounds
3.2 APPLICATION
3.2.1 Paint
3.2.1.1 Rate of Application
3.2.1.2 Drying
3.2.2 Thermoplastic Compounds
3.2.2.1 Longitudinal Markings
3.2.2.2 Primer
3.2.2.3 Markings

-- End of Section Table of Contents --

SECTION 02763

PAVEMENT MARKINGS
04/01

PART 1 GENERAL

1.1 REFERENCES

The publications listed below form a part of this specification to the extent referenced. The publications are referred to in the text by basic designation only.

AMERICAN SOCIETY FOR TESTING AND MATERIALS (ASTM)

ASTM D 792	(1998) Density and Specific Gravity (Relative Density) of Plastics by Displacement

FEDERAL SPECIFICATIONS (FS)

FS TT-B-1325	(Rev C; Notice 1; Canc. Notice 2) Beads (Glass Spheres) Retro-Reflective (Metric)
FS TT-P-1952	(Rev D; Canc. Notice 1) Paint, Traffic and Airfield Marking, Waterborne (Metric)

1.2 SUBMITTALS

Government approval is required for submittals with a "G" designation; submittals not having a "G" designation are for information only. When used, a designation following the "G" designation identifies the office that will review the submittal for the Government. The following shall be submitted in accordance with Section 01330 SUBMITTAL PROCEDURES:

SD-03 Product Data

Equipment; GA,

Lists of proposed equipment, including descriptive data, and notifications of proposed Contractor actions as specified in this section. List of removal equipment shall include descriptive data indicating area of coverage per pass, pressure adjustment range, tank and flow capacities, and safety precautions required for the equipment operation.

Composition Requirements;

Manufacturer's current printed product description and Material Safety Data Sheets (MSDS) for each type paint/color proposed for use.

SD-06 Test Reports; GA

Sampling and Testing;

Certified copies of the test reports, prior to the use of the materials at the jobsite. Testing shall be performed in an approved independent laboratory.

SD-07 Certificates; GA

Volatile Organic Compound (VOC);

Certificate stating that the proposed pavement marking paint meets the VOC regulations of the local Air Pollution Control District having jurisdiction over the geographical area in which the project is located.

1.3 DELIVERY AND STORAGE

All materials shall be delivered and stored in sealed containers that plainly show the designated name, formula or specification number, batch number, color, date of manufacture, manufacturer's name, and directions, all of which shall be plainly legible at time of use.

1.4 EQUIPMENT

All machines, tools and equipment used in the performance of the work shall be approved and maintained in satisfactory operating condition. Equipment operating on roads and runways shall display low speed traffic markings and traffic warning lights.

1.4.1 Paint Application Equipment

The equipment to apply paint to pavements shall be a self-propelled or mobile-drawn pneumatic spraying machine with suitable arrangements of atomizing nozzles and controls to obtain the specified results. The machine shall have a speed during application not less than 5 mph, and shall be capable of applying the stripe widths indicated, at the paint coverage rate specified in paragraph APPLICATION, and of even uniform thickness with clear-cut edges. Equipment used for marking streets and highways shall be capable of placing the prescribed number of lines at a single pass as solid lines, intermittent lines or a combination of solid and intermittent lines using a maximum of two different colors of paint as specified. . The paint applicator shall have paint reservoirs or tanks of sufficient capacity and suitable gauges to apply paint in accordance with requirements specified. Tanks shall be equipped with suitable air-driven mechanical agitators. The spray mechanism shall be equipped with quick-action valves conveniently located, and shall include necessary pressure regulators and gauges in full view and reach of the operator. Paint strainers shall be installed in paint supply lines to ensure freedom from residue and foreign matter that may cause malfunction of the spray guns. The paint applicator shall be readily adaptable for attachment of an air-actuated dispenser for the reflective media approved for use. Pneumatic spray guns shall be provided for hand application of paint in areas where the mobile paint applicator cannot be used.

1.4.2 Thermoplastic Application Equipment

1.4.2.1 Thermoplastic Material

Thermoplastic material shall be applied to the primed pavement surface by spray techniques or by the extrusion method, wherein one side of the shaping die is the pavement and the other three sides are contained by, or are part of, suitable equipment for heating and controlling the flow of material. By either method, the markings shall be applied with equipment that is capable of providing continuous uniformity in the dimensions of the stripe.

1.4.2.2 Application Equipment

a. Application equipment shall provide continuous mixing and agitation of the material. Conveying parts of the equipment between the main material reservoir and the extrusion shoe or spray gun shall prevent accumulation and clogging. All parts of the equipment which come into contact with the material shall be easily accessible and exposable for cleaning and maintenance. All mixing and conveying parts up to and including the extrusion shoes and spray guns shall maintain the material at the required temperature with heat-transfer oil or electrical-element-controlled heat.

b. The application equipment shall be constructed to ensure continuous uniformity in the dimensions of the stripe. The applicator shall provide a means for cleanly cutting off stripe ends squarely and shall provide a method of applying "skiplines". The equipment shall be capable of applying varying widths of traffic markings.

c. The applicator shall be equipped with a drop-on type bead dispenser capable of uniformly dispensing reflective glass spheres at controlled rates of flow. The bead dispenser shall be automatically operated and shall begin flow prior to the flow of composition to assure that the strip is fully reflectorized.

1.4.2.3 Mobile and Maneuverable

Application equipment shall be mobile and maneuverable to the extent that straight lines can be followed and normal curves can be made in a true arc. The equipment used for the placement of thermoplastic pavement markings shall be of two general types: mobile applicator and portable applicator.

1.4.3 Reflective Media Dispenser

The dispenser for applying the reflective media shall be attached to the paint dispenser and shall operate automatically and simultaneously with the applicator through the same control mechanism. The dispenser shall be capable of adjustment and designed to provide uniform flow of reflective media over the full length and width of the stripe at the rate of coverage specified in paragraph APPLICATION, at all operating speeds of the applicator to which it is attached.

PART 2 PRODUCTS

2.1 PAINT

The paint shall be homogeneous, easily stirred to smooth consistency, and shall show no hard settlement or other objectionable characteristics during a storage period of 6 months. Paints for parking lots, roads, and streets shall conform to FS TT-P-1952, color as indicated . Pavement marking

paints shall comply with applicable state and local laws enacted to ensure compliance with Federal Clean Air Standards. Paint materials shall conform to the restrictions of the local Air Pollution Control District.

2.2 THERMOPLASTIC COMPOUNDS

The thermoplastic reflectorized pavement marking compound shall be extruded or sprayed in a molten state onto a primed pavement surface. Following a surface application of glass beads and upon cooling to normal pavement temperatures, the marking shall be an adherent reflectorized strip of the specified thickness and width that is capable of resisting deformation by traffic.

2.2.1 Composition Requirements

The binder component shall be formulated as a hydrocarbon resin. The pigment, beads and filler shall be uniformly dispersed in the binder resin. The thermoplastic composition shall be free from all skins, dirt, and foreign objects and shall comply with the following requirements:

	Percent by Weight	
Component	White	Yellow
Binder	17 min.	17 min.
Titanium dioxide	10 min.	-
Glass beads,	20 min.	20 min.
Calcium carbonate & inert fillers	49 max.	*
Yellow pigments	-	*

*Amount and type of yellow pigment, calcium carbonate and inert fillers shall be at the option of the manufacturer, providing the other composition requirements of this specification are met.

2.2.2 Physical Properties

2.2.2.1 Color

The color shall be white.

2.2.2.2 Drying Time

When installed at 70 degrees F and in thicknesses between 1/8 and 3/16 inch, the composition shall be completely solid and shall show no damaging effect from traffic after curing 15 minutes.

2.2.2.3 Softening Point

The composition shall have a softening point of not less than 194 degrees F when tested in accordance with ASTM E 28.

2.2.2.4 Specific Gravity

The specific gravity of the composition shall be between 1.9 and 2.2 as determined in accordance with ASTM D 792.

2.2.3 Asphalt Concrete Primer

The primer for asphalt concrete pavements shall be a thermosetting adhesive with a solids content of pigment reinforced synthetic rubber and synthetic plastic resin dissolved and/or dispersed in a volatile organic compound (VOC). Solids content shall not be less than 10 percent by weight at (70 degrees F) and 60 percent relative humidity. A wet film thickness of (0.005 inch) plus or minus (0.001 inch), shall dry to a tack-free condition in less than 5 minutes.

2.2.4 Portland Cement Concrete Primer

The primer for Portland cement concrete pavements shall be an epoxy resin primer. The primer shall be of the type recommended by the manufacturer of the thermoplastic composition. Epoxy primers recommended by the manufacturer shall be approved by the Contracting Officer prior to use. Requests for approval shall be accompanied with technical data, instructions for use, and a (1 quart) sample of the primer material.

2.3 [Enter Appropriate Subpart Title Here]2.4 REFLECTIVE MEDIA

Reflective media for parking lots,roads and streets shall conform to FS TT-B-1325, Type I, Gradation A or AASHTO M 247, Type I.

PART 3 EXECUTION

3.1 SURFACE PREPARATION

Surfaces to be marked shall be thoroughly cleaned before application of the pavement marking material. Dust, dirt, and other granular surface deposits shall be removed by sweeping, blowing with compressed air, rinsing with water or a combination of these methods as required. Rubber deposits, surface laitance, existing paint markings, and other coatings adhering to the pavement shall be completely removed with scrapers, wire brushes, sandblasting, approved chemicals, or mechanical abrasion as directed. Areas of old pavement affected with oil or grease shall be scrubbed with several applications of trisodium phosphate solution or other approved detergent or degreaser, and rinsed thoroughly after each application. After cleaning, oil-soaked areas shall be sealed with cut shellac to prevent bleeding through the new paint. Pavement surfaces shall be allowed to dry, when water is used for cleaning, prior to striping or marking. Surfaces shall be recleaned, when work has been stopped due to rain.

3.1.1 Pretreatment for Early Painting

Where early painting is required on rigid pavements, a pretreatment with an aqueous solution containing 3 percent phosphoric acid and 2 percent zinc chloride shall be applied to prepared pavement areas prior to painting.

3.1.2 Cleaning Existing Pavement Markings

In general, markings shall not be placed over existing pavement marking patterns. Existing pavement markings, which are in good condition but interfere or conflict with the newly applied marking patterns, shall be removed. Deteriorated or obscured markings that are not misleading or

confusing or interfere with the adhesion of the new marking material do not require removal. New preformed and thermoplastic pavement markings shall not be applied over existing preformed or thermoplastic markings. Whenever grinding, scraping, sandblasting or other operations are performed the work must be conducted in such a manner that the finished pavement surface is not damaged or left in a pattern that is misleading or confusing. When these operations are completed the pavement surface shall be blown off with compressed air to remove residue and debris resulting from the cleaning work.

3.1.3 Cleaning Concrete Curing Compounds

On new Portland cement concrete pavements, cleaning operations shall not begin until a minimum of 30 days after the placement of concrete. All new concrete pavements shall be cleaned by either sandblasting or water blasting. When water blasting is performed, thermoplastic and preformed markings shall be applied no sooner than 24 hours after the blasting has been completed. The extent of the blasting work shall be to clean and prepare the concrete surface as follows:

a. There is no visible evidence of curing compound on the peaks of the textured concrete surface.

b. There are no heavy puddled deposits of curing compound in the valleys of the textured concrete surface.

c. All remaining curing compound is intact; all loose and flaking material is removed.

d. The peaks of the textured pavement surface are rounded in profile and free of sharp edges and irregularities.

e. The surface to be marked is dry.

3.2 APPLICATION

All pavement markings and patterns shall be placed as shown on the plans.

3.2.1 Paint

Paint shall be applied to clean, dry surfaces, and only when air and pavement temperatures are above 40 degrees F and less than 95 degrees F. Paint temperature shall be maintained within these same limits. New asphalt pavement surfaces and new Portland concrete cement shall be allowed to cure for a period of not less than 30 days before applications of paint. Paint shall be applied pneumatically with approved equipment at rate of coverage specified . The Contractor shall provide guide lines and templates as necessary to control paint application. Special precautions shall be taken in marking numbers, letters, and symbols. Edges of markings shall be sharply outlined.

3.2.1.1 Rate of Application

a. Reflective Markings: Pigmented binder shall be applied evenly to the pavement area to be coated at a rate of (105 plus or minus 5 square feet per gallon). Glass spheres shall be applied uniformly to the wet paint on road and street pavement at a rate of 6 plus or minus (0.5 pounds of glass spheres per gallon of paint).

b. Nonreflective Markings: Paint shall be applied evenly to the pavement surface to be coated at a rate of (105 plus or minus 5 square feet per gallon).

3.2.1.2 Drying

The maximum drying time requirements of the paint specifications will be strictly enforced to prevent undue softening of bitumen, and pickup, displacement, or discoloration by tires of traffic. If there is a delay in drying of the markings, painting operations shall be discontinued until cause of the slow drying is determined and corrected.

3.2.2 Thermoplastic Compounds

Thermoplastic pavement markings shall be placed upon dry pavement; surface dry only will not be considered an acceptable condition. At the time of installation, the pavement surface temperature shall be a minimum of 40 degrees F and rising. Thermoplastics, as placed, shall be free from dirt or tint.

3.2.2.1 Longitudinal Markings

All centerline, skipline, edgeline, and other longitudinal type markings shall be applied with a mobile applicator. All special markings, crosswalks, stop bars, legends, arrows, and similar patterns shall be placed with a portable applicator, using the extrusion method.

3.2.2.2 Primer

After surface preparation has been completed the asphalt and/or concrete pavement surface shall be primed. The primer shall be applied with spray equipment. Primer materials shall be allowed to "set-up" prior to applying the thermoplastic composition. The asphalt concrete primer shall be allowed to dry to a tack-free condition, usually occurring in less than 10 minutes. The Portland cement concrete primer shall be allowed to dry in accordance with the thermoplastic manufacturer's recommendations. To shorten the curing time of the epoxy resins an infrared heating device may be used on the concrete primer.

a. Asphalt Concrete Primer: Primer shall be applied to all asphalt concrete pavements at a wet film thickness of 0.005 inch, plus or minus 0.001 inch (265-400 square feet per gallon).

b. Portland Cement Concrete Primer: Primer shall be applied to all concrete pavements (including concrete bridge decks) at a wet film thickness of between (0.04 to 0.05 inch) (320-400 square feet per gallon).

3.2.2.3 Markings

After the primer has "set-up", the thermoplastic shall be applied at temperatures no lower than (375 degrees F) nor higher than 425 degrees F at the point of deposition. Immediately after installation of the marking, drop-on glass spheres shall be mechanically applied so that the spheres are held by and imbedded in the surface of the molten material.

a. Extruded Markings: All extruded thermoplastic markings shall be applied at the specified width and at a thickness of not less than nor more than

b. Sprayed Markings: All sprayed thermoplastic markings shall be applied at the specified width and the thicknesses designated in the contract plans. If the plans do not specify a thickness, centerline markings shall be applied at a wet thickness of plus or minus and edgeline markings at a wet thickness of plus or minus

c. Reflective Glass Spheres: Immediately following application, reflective glass spheres shall be dropped onto the molten thermoplastic marking at the rate of 1 pound per 20 square feet of compound.

-- End of Section --

SECTION TABLE OF CONTENTS

DIVISION 02 - SITE WORK

SECTION 02770

CONCRETE SIDEWALKS AND CURBS AND GUTTERS

PART 1 GENERAL

1.1 REFERENCES
1.2 SUBMITTALS
1.3 WEATHER LIMITATIONS
1.3.1 Placing During Cold Weather
1.3.2 Placing During Warm Weather
1.4 PLANT, EQUIPMENT, MACHINES, AND TOOLS
1.4.1 General Requirements
1.4.2 Slip Form Equipment

PART 2 PRODUCTS

2.1 CONCRETE
2.1.1 Air Content
2.1.2 Slump
2.1.3 Reinforcement Steel
2.2 CONCRETE CURING MATERIALS
2.2.1 Impervious Sheet Materials
2.2.2 Burlap
2.2.3 White Pigmented Membrane-Forming Curing Compound
2.3 CONCRETE PROTECTION MATERIALS
2.4 JOINT FILLER STRIPS
2.4.1 Contraction Joint Filler for Curb and Gutter
2.4.2 Expansion Joint Filler, Premolded
2.5 JOINT SEALANTS
2.5.1 Joint Sealant, Cold-Applied
2.5.2 Joint Sealant, Hot-Poured
2.6 FORM WORK
2.6.1 Sidewalk Forms
2.6.2 Curb and Gutter Forms

PART 3 EXECUTION

3.1 SUBGRADE PREPARATION
3.1.1 Sidewalk Subgrade
3.1.2 Curb and Gutter Subgrade
3.1.3 Maintenance of Subgrade
3.2 FORM SETTING
3.2.1 Sidewalks
3.2.2 Curbs and Gutters
3.3 SIDEWALK CONCRETE PLACEMENT AND FINISHING
3.3.1 Formed Sidewalks
3.3.2 Concrete Finishing
3.3.3 Edge and Joint Finishing
3.3.4 Surface and Thickness Tolerances
3.4 CURB AND GUTTER CONCRETE PLACEMENT AND FINISHING
3.4.1 Formed Curb and Gutter

3.4.2 Curb and Gutter Finishing
3.4.3 Concrete Finishing
3.4.4 Joint Finishing
3.4.5 Surface and Thickness Tolerances
3.5 SIDEWALK JOINTS
3.5.1 Sidewalk Contraction Joints
3.5.2 Sidewalk Expansion Joints
3.6 CURB AND GUTTER JOINTS
3.6.1 Contraction Joints
3.6.2 Expansion Joints
3.7 CURING AND PROTECTION
3.7.1 General Requirements
3.7.1.1 Mat Method
3.7.1.2 Impervious Sheeting Method
3.7.1.3 Membrane Curing Method
3.7.2 Backfilling
3.7.3 Protection
3.7.4 Protective Coating
3.7.4.1 Application
3.7.4.2 Precautions
3.8 FIELD QUALITY CONTROL
3.8.1 General Requirements
3.8.2 Concrete Testing
3.8.2.1 Strength Testing
3.8.2.2 Air Content
3.8.2.3 Slump Test
3.8.3 Thickness Evaluation
3.8.4 Surface Evaluation
3.9 SURFACE DEFICIENCIES AND CORRECTIONS
3.9.1 Thickness Deficiency
3.9.2 High Areas
3.9.3 Appearance

-- End of Section Table of Contents --

SECTION 02770

CONCRETE SIDEWALKS AND CURBS AND GUTTERS

PART 1 GENERAL

1.1 REFERENCES

The publications listed below form a part of this specification to the extent referenced. The publications are referred to in the text by basic designation only.

AMERICAN ASSOCIATION OF STATE HIGHWAY AND TRANSPORTATION OFFICIALS (AASHTO)

AASHTO M 182	(1991) Burlap Cloth Made from Jute or Kenaf

AMERICAN SOCIETY FOR TESTING AND MATERIALS (ASTM)

ASTM A 185	(1997) Steel Welded Wire Fabric, Plain, for Concrete Reinforcement
ASTM A 615/A 615M	(1996a) Deformed and Plain Billet-Steel Bars for Concrete Reinforcement
ASTM A 616/A 616M	(1996a) Rail-Steel Deformed and Plain Bars for Concrete Reinforcement
ASTM A 617/A 617M	(1996a) Axle-Steel Deformed and Plain Bars for Concrete Reinforcement
ASTM C 31/C 31M	(1996) Making and Curing Concrete Test Specimens in the Field
ASTM C 171	(1997) Sheet Materials for Curing Concrete
ASTM C 173	(1996) Air Content of Freshly Mixed Concrete by the Volumetric Method
ASTM C 231	(1997) Air Content of Freshly Mixed Concrete by the Pressure Method
ASTM C 309	(1997) Liquid Membrane-Forming Compounds for Curing Concrete
ASTM C 920	(1995) Elastomeric Joint Sealants
ASTM D 1751	(1983; R 1991) Preformed Expansion Joint Filler for Concrete Paving and Structural Construction (Nonextruding and Resilient Bituminous Types)
ASTM D 1752	(1984; R 1996) Preformed Sponge Rubber and Cork Expansion Joint Fillers for Concrete

	Paving and Structural Construction
ASTM D 3405	(1996) Joint Sealants, Hot-Applied, for Concrete and Asphalt Pavements

1.2 SUBMITTALS

Government approval is required for submittals with a "GA" designation; submittals having an "FIO" designation are for information only. The following shall be submitted in accordance with Section 01330 SUBMITTAL PROCEDURES:

SD-09 Reports

Field Quality Control; GA

Copies of all test reports within 24 hours of completion of the test.

SD-18 Records

Concrete; GA

Copies of certified delivery tickets for all concrete used in the construction.

1.3 WEATHER LIMITATIONS

1.3.1 Placing During Cold Weather

Concrete placement shall not take place when the air temperature reaches 5 degrees C and is falling, or is already below that point. Placement may begin when the air temperature reaches 2 degrees C and is rising, or is already above 5 degrees C. Provisions shall be made to protect the concrete from freezing during the specified curing period. If necessary to place concrete when the temperature of the air, aggregates, or water is below 2 degrees C, placement and protection shall be approved in writing. Approval will be contingent upon full conformance with the following provisions. The underlying material shall be prepared and protected so that it is entirely free of frost when the concrete is deposited. Mixing water and aggregates shall be heated as necessary to result in the temperature of the in-place concrete being between Methods and equipment for heating shall be approved. The aggregates shall be free of ice, snow, and frozen lumps before entering the mixer. Covering and other means shall be provided for maintaining the concrete at a temperature of at least 10 degrees C for not less than 72 hours after placing, and at a temperature above freezing for the remainder of the curing period.

1.3.2 Placing During Warm Weather

The temperature of the concrete as placed shall not exceed 30 degrees C except where an approved retarder is used. The mixing water and/or aggregates shall be cooled, if necessary, to maintain a satisfactory placing temperature. The placing temperature shall not exceed 35 degrees Cat any time.

1.4 PLANT, EQUIPMENT, MACHINES, AND TOOLS

1.4.1 General Requirements

Plant, equipment, machines, and tools used in the work shall be subject to approval and shall be maintained in a satisfactory working condition at all times. The equipment shall have the capability of producing the required product, meeting grade controls, thickness control and smoothness requirements as specified. Use of the equipment shall be discontinued if it produces unsatisfactory results. The Contracting Officer shall have access at all times to the plant and equipment to ensure proper operation and compliance with specifications.

1.4.2 Slip Form Equipment

Slip form paver or curb forming machine, will be approved based on trial use on the job and shall be self-propelled, automatically controlled, crawler mounted, and capable of spreading, consolidating, and shaping the plastic concrete to the desired cross section in 1 pass.

PART 2 PRODUCTS

2.1 CONCRETE

Concrete shall have a minimum compressive strength of 24 MPa at 28 days. Maximum size of aggregate shall be

2.1.1 Air Content

Mixtures shall have air content by volume of concrete of 5 to 7 percent, based on measurements made immediately after discharge from the mixer.

2.1.2 Slump

The concrete slump shall be in accordance with MnDOT 2521 Walks and MnDOT 2531 Concrete Curbing .

2.1.3 Reinforcement Steel

Reinforcement bars shall conform to ASTM A 615/A 615M, ASTM A 616/A 616M, or ASTM A 617/A 617M. Wire mesh reinforcement shall conform to ASTM A 185.

2.2 CONCRETE CURING MATERIALS

2.2.1 Impervious Sheet Materials

Impervious sheet materials shall conform to ASTM C 171, type optional, except that polyethylene film, if used, shall be white opaque.

2.2.2 Burlap

Burlap shall conform to AASHTO M 182.

2.2.3 White Pigmented Membrane-Forming Curing Compound

White pigmented membrane-forming curing compound shall conform to ASTM C 309, Type 2.

2.3 CONCRETE PROTECTION MATERIALS

Concrete protection materials shall be a linseed oil mixture of equal parts, by volume, of linseed oil and either mineral spirits, naphtha, or turpentine. At the option of the contractor, commercially prepared linseed

oil mixtures, formulated specifically for application to concrete to provide protection against the action of deicing chemicals may be used, except that emulsified mixtures are not acceptable.

2.4 JOINT FILLER STRIPS

2.4.1 Contraction Joint Filler for Curb and Gutter

Contraction joint filler for curb and gutter shall consist of hard-pressed fiberboard.

2.4.2 Expansion Joint Filler, Premolded

Expansion joint filler, premolded, shall conform to ASTM D 1751 or ASTM D 1752, 10 mm thick, unless otherwise indicated.

2.5 JOINT SEALANTS

2.5.1 Joint Sealant, Cold-Applied

Joint sealant, cold-applied shall conform to ASTM C 920.

2.5.2 Joint Sealant, Hot-Poured

Joint sealant, hot-poured shall conform to ASTM D 3405.

2.6 FORM WORK

Form work shall be designed and constructed to ensure that the finished concrete will conform accurately to the indicated dimensions, lines, and elevations, and within the tolerances specified. Forms shall be of wood or steel, straight, of sufficient strength to resist springing during depositing and consolidating concrete. Wood forms shall be surfaced plank, 50 mm nominal thickness, straight and free from warp, twist, loose knots, splits or other defects. Wood forms shall have a nominal length of Radius bends may be formed with 19 mm boards, laminated to the required thickness. Steel forms shall be channel-formed sections with a flat top surface and with welded braces at each end and at not less than two intermediate points. Ends of steel forms shall be interlocking and self-aligning. Steel forms shall include flexible forms for radius forming, corner forms, form spreaders, and fillers. Steel forms shall have a nominal length of 3 m with a minimum of 3 welded stake pockets per form. Stake pins shall be solid steel rods with chamfered heads and pointed tips designed for use with steel forms.

2.6.1 Sidewalk Forms

Sidewalk forms shall be of a height equal to the full depth of the finished sidewalk.

2.6.2 Curb and Gutter Forms

Curb and gutter outside forms shall have a height equal to the full depth of the curb or gutter. The inside form of curb shall have batter as indicated and shall be securely fastened to and supported by the outside form. Rigid forms shall be provided for curb returns, except that benders or thin plank forms may be used for curb or curb returns with a radius of 3 m or more, where grade changes occur in the return, or where the central angle is such that a rigid form with a central angle of 90 degrees cannot

be used. Back forms for curb returns may be made of 38 mm benders, for the full height of the curb, cleated together. In lieu of inside forms for curbs, a curb "mule" may be used for forming and finishing this surface, provided the results are approved.

PART 3 EXECUTION

3.1 SUBGRADE PREPARATION

The subgrade shall be constructed to the specified grade and cross section prior to concrete placement. Subgrade shall be placed and compacted in conformance with Section 2300 EARTHWORK.

3.1.1 Sidewalk Subgrade

The subgrade shall be tested for grade and cross section with a template extending the full width of the sidewalk and supported between side forms.

3.1.2 Curb and Gutter Subgrade

The subgrade shall be tested for grade and cross section by means of a template extending the full width of the curb and gutter. The subgrade shall be of materials equal in bearing quality to the subgrade under the adjacent pavement.

3.1.3 Maintenance of Subgrade

The subgrade shall be maintained in a smooth, compacted condition in conformity with the required section and established grade until the concrete is placed. The subgrade shall be in a moist condition when concrete is placed. The subgrade shall be prepared and protected to produce a subgrade free from frost when the concrete is deposited.

3.2 FORM SETTING

Forms shall be set to the indicated alignment, grade and dimensions. Forms shall be held rigidly in place by a minimum of 3 stakes per form placed at intervals not to exceed Corners, deep sections, and radius bends shall have additional stakes and braces, as required. Clamps, spreaders, and braces shall be used where required to ensure rigidity in the forms. Forms shall be removed without injuring the concrete. Bars or heavy tools shall not be used against the concrete in removing the forms. Any concrete found defective after form removal shall be promptly and satisfactorily repaired. Forms shall be cleaned and coated with form oil each time before concrete is placed. Wood forms may, instead, be thoroughly wetted with water before concrete is placed, except that with probable freezing temperatures, oiling is mandatory.

3.2.1 Sidewalks

Forms for sidewalks shall be set with the upper edge true to line and grade with an allowable tolerance of 3 mm in any 3 m long section. After forms are set, grade and alignment shall be checked with a 3 m straightedge. Forms shall have a transverse slope of 20 mm per meter with the low side adjacent to the roadway. Side forms shall not be removed for 12 hours after finishing has been completed.

3.2.2 Curbs and Gutters

The forms of the front of the curb shall be removed not less than 2 hours nor more than 6 hours after the concrete has been placed. Forms back of curb shall remain in place until the face and top of the curb have been finished, as specified for concrete finishing. Gutter forms shall not be removed while the concrete is sufficiently plastic to slump in any direction.

3.3 SIDEWALK CONCRETE PLACEMENT AND FINISHING

3.3.1 Formed Sidewalks

Concrete shall be placed in the forms in one layer. When consolidated and finished, the sidewalks shall be of the thickness indicated. After concrete has been placed in the forms, a strike-off guided by side forms shall be used to bring the surface to proper section to be compacted. The concrete shall be consolidated with an approved vibrator, and the surface shall be finished to grade with a strike off.

3.3.2 Concrete Finishing

After straightedging, when most of the water sheen has disappeared, and just before the concrete hardens, the surface shall be finished with a wood float or darby to a smooth and uniformly fine granular or sandy texture free of waves, irregularities, or tool marks. A scored surface shall be produced by brooming with a fiber-bristle brush in a direction transverse to that of the traffic, followed by edging.

3.3.3 Edge and Joint Finishing

All slab edges, including those at formed joints, shall be finished with an edger having a radius of 3 mm. Transverse joint shall be edged before brooming, and the brooming shall eliminate the flat surface left by the surface face of the edger. Corners and edges which have crumbled and areas which lack sufficient mortar for proper finishing shall be cleaned and filled solidly with a properly proportioned mortar mixture and then finished.

3.3.4 Surface and Thickness Tolerances

Finished surfaces shall not vary more than 8 mm from the testing edge of a 3 m straightedge. Permissible deficiency in section thickness will be up to 6 mm .

3.4 CURB AND GUTTER CONCRETE PLACEMENT AND FINISHING

3.4.1 Formed Curb and Gutter

Concrete shall be placed to the section required in a single lift. Consolidation shall be achieved by using approved mechanical vibrators. Curve shaped gutters shall be finished with a standard curb "mule".

3.4.2 Curb and Gutter Finishing

Approved slipformed curb and gutter machines may be used in lieu of hand placement.

3.4.3 Concrete Finishing

Exposed surfaces shall be floated and finished with a smooth wood float

until true to grade and section and uniform in texture. Floated surfaces shall then be brushed with a fine-hair brush with longitudinal strokes. The edges of the gutter and top of the curb shall be rounded with an edging tool to a radius of Immediately after removing the front curb form, the face of the curb shall be rubbed with a wood or concrete rubbing block and water until blemishes, form marks, and tool marks have been removed. The front curb surface, while still wet, shall be brushed in the same manner as the gutter and curb top. The top surface of gutter and entrance shall be finished to grade with a wood float.

3.4.4 Joint Finishing

Curb edges at formed joints shall be finished as indicated.

3.4.5 Surface and Thickness Tolerances

Finished surfaces shall not vary more than 6 mm from the testing edge of a 3 m straightedge. Permissible deficiency in section thickness will be up to 6 mm.

3.5 SIDEWALK JOINTS

Sidewalk joints shall be constructed to divide the surface into rectangular areas. Transverse contraction joints shall be spaced at a distance equal to the sidewalk width or 1. 5 m on centers, whichever is less, and shall be continuous across the slab. Longitudinal contraction joints shall be constructed along the centerline of all sidewalks 3 m or more in width. Transverse expansion joints shall be installed at sidewalk returns and opposite expansion joints in adjoining curbs. Where the sidewalk is not in contact with the curb, transverse expansion joints shall be installed as indicated. Expansion joints shall be formed about structures and features which project through or into the sidewalk pavement, using joint filler of the type, thickness, and width indicated.

3.5.1 Sidewalk Contraction Joints

The contraction joints shall be formed in the fresh concrete by cutting a groove in the top portion of the slab to a depth of at least one-fourth of the sidewalk slab thickness, using a jointer to cut the groove, or by sawing a groove in the hardened concrete with a power-driven saw, unless otherwise approved. Sawed joints shall be constructed by sawing a groove in the concrete with a 3 mm blade to the depth indicated. An ample supply of saw blades shall be available on the job before concrete placement is started, and at least one standby sawing unit in good working order shall be available at the jobsite at all times during the sawing operations.

3.5.2 Sidewalk Expansion Joints

Expansion joints shall be formed with 10 mm joint filler strips. Joint filler shall be placed with top edge 6 mm below the surface and shall be held in place with steel pins or other devices to prevent warping of the filler during floating and finishing. Immediately after finishing operations are completed, joint edges shall be rounded with an edging tool having a radius of 3 mm, and concrete over the joint filler shall be removed. At the end of the curing period, expansion joints shall be cleaned and filled with joint sealant. The joint opening shall be thoroughly cleaned before the sealing material is placed. Sealing material shall not be spilled on exposed surfaces of the concrete. Concrete at the joint shall be surface dry and atmospheric and concrete temperatures shall

be above 10 degrees C at the time of application of joint sealing material. Excess material on exposed surfaces of the concrete shall be removed immediately and concrete surfaces cleaned.

3.6 CURB AND GUTTER JOINTS

Curb and gutter joints shall be constructed at right angles to the line of curb and gutter.

3.6.1 Contraction Joints

Contraction joints shall be constructed directly opposite contraction joints in abutting portland cement concrete pavements and spaced so that monolithic sections between curb returns will not be less than 1.5 m nor greater than 4.5 m in length. Contraction joints shall be constructed by means of 3 mm thick separators and of a section conforming to the cross section of the curb and gutter. Separators shall be removed as soon as practicable after concrete has set sufficiently to preserve the width and shape of the joint and prior to finishing.

3.6.2 Expansion Joints

Expansion joints shall be formed by means of preformed expansion joint filler material cut and shaped to the cross section of curb and gutter. Expansion joints shall be provided in curb and gutter directly opposite expansion joints of abutting portland cement concrete pavement, and shall be of the same type and thickness as joints in the pavement. Where curb and gutter do not abut portland cement concrete pavement, expansion joints at least 10 mm in width shall be provided at intervals not exceeding 20 Expansion joints shall be provided in nonreinforced concrete gutter at locations indicated. Expansion joints shall be sealed immediately following curing of the concrete or as soon thereafter as weather conditions permit.

3.7 CURING AND PROTECTION

3.7.1 General Requirements

Concrete shall be protected against loss of moisture and rapid temperature changes for at least 7 days from the beginning of the curing operation. Unhardened concrete shall be protected from rain and flowing water. All equipment needed for adequate curing and protection of the concrete shall be on hand and ready for use before actual concrete placement begins. Protection shall be provided as necessary to prevent cracking of the pavement due to temperature changes during the curing period.

3.7.1.1 Mat Method

The entire exposed surface shall be covered with 2 or more layers of burlap. Mats shall overlap each other at least 150 mm. The mat shall be thoroughly wetted with water prior to placing on concrete surface and shall be kept continuously in a saturated condition and in intimate contact with concrete for not less than 7 days.

3.7.1.2 Impervious Sheeting Method

The entire exposed surface shall be wetted with a fine spray of water and then covered with impervious sheeting material. Sheets shall be laid directly on the concrete surface with the light-colored side up and

overlapped 300 mm when a continuous sheet is not used. The curing medium shall not be less than 450 mm wider than the concrete surface to be cured, and shall be securely weighted down by heavy wood planks, or a bank of moist earth placed along edges and laps in the sheets. Sheets shall be satisfactorily repaired or replaced if torn or otherwise damaged during curing. The curing medium shall remain on the concrete surface to be cured for not less than 7 days.

3.7.1.3 Membrane Curing Method

A uniform coating of white-pigmented membrane-curing compound shall be applied to the entire exposed surface of the concrete as soon after finishing as the free water has disappeared from the finished surface. Formed surfaces shall be coated immediately after the forms are removed and in no case longer than 1 hour after the removal of forms. Concrete shall not be allowed to dry before the application of the membrane. If any drying has occurred, the surface of the concrete shall be moistened with a fine spray of water and the curing compound applied as soon as the free water disappears. Curing compound shall be applied in two coats by hand-operated pressure sprayers at a coverage of approximately 5 square meters per liter for the total of both coats. The second coat shall be applied in a direction approximately at right angles to the direction of application of the first coat. The compound shall form a uniform, continuous, coherent film that will not check, crack, or peel and shall be free from pinholes or other imperfections. If pinholes, abrasion, or other discontinuities exist, an additional coat shall be applied to the affected areas within 30 minutes. Concrete surfaces that are subjected to heavy rainfall within 3 hours after the curing compound has been applied shall be resprayed by the method and at the coverage specified above. Areas where the curing compound is damaged by subsequent construction operations within the curing period shall be resprayed. Necessary precautions shall be taken to insure that the concrete is properly cured at sawed joints, and that no curing compound enters the joints. The top of the joint opening and the joint groove at exposed edges shall be tightly sealed before the concrete in the region of the joint is resprayed with curing compound. The method used for sealing the joint groove shall prevent loss of moisture from the joint during the entire specified curing period. Approved standby facilities for curing concrete pavement shall be provided at a location accessible to the jobsite for use in the event of mechanical failure of the spraying equipment or other conditions that might prevent correct application of the membrane-curing compound at the proper time. Concrete surfaces to which membrane-curing compounds have been applied shall be adequately protected during the entire curing period from pedestrian and vehicular traffic, except as required for joint-sawing operations and surface tests, and from any other possible damage to the continuity of the membrane.

3.7.2 Backfilling

After curing, debris shall be removed and the area adjoining the concrete shall be backfilled, graded, and compacted to conform to the surrounding area in accordance with lines and grades indicated.

3.7.3 Protection

Completed concrete shall be protected from damage until accepted. The Contractor shall repair damaged concrete and clean concrete discolored during construction. Concrete that is damaged shall be removed and reconstructed for the entire length between regularly scheduled joints.

Refinishing the damaged portion will not be acceptable. Removed damaged portions shall be disposed of as directed.

3.7.4 Protective Coating

Protective coating of linseed oil mixture shall be applied to the exposed-to-view concrete surface.

3.7.4.1 Application

Curing and backfilling operation shall be completed prior to applying two coats of protective coating. Concrete shall be surface dry and clean before each application. Coverage shall be by spray application at not more than 11 square meters per liter for first application and not more than for second application, except that the number of applications and coverage for each application for commercially prepared mixture shall be in accordance with the manufacturer's instructions. Coated surfaces shall be protected from vehicular and pedestrian traffic until dry.

3.7.4.2 Precautions

Protective coating shall not be heated by direct application of flame or electrical heaters and shall be protected from exposure to open flame, sparks, and fire adjacent to open containers or applicators. Material shall not be applied at ambient or material temperatures lower than

3.8 FIELD QUALITY CONTROL

3.8.1 General Requirements

The Contractor shall perform the inspection and tests described and meet the specified requirements for inspection details and frequency of testing. Based upon the results of these inspections and tests, the Contractor shall take the action and submit reports as required below, and any additional tests to insure that the requirements of these specifications are met.

3.8.2 Concrete Testing

3.8.2.1 Strength Testing

The Contractor shall provide molded concrete specimens for strength tests. Samples of concrete placed each day shall be taken not less than once a day nor less than once for every 190 cubic meters of concrete. The samples for strength tests shall be taken in accordance with ASTM C 172 and MnDOT 2461. Cylinders for acceptance shall be molded in conformance with ASTM C 31/C 31M by an approved testing laboratory. Each strength test result shall be the average of 2 test cylinders from the same concrete sample tested at 28 days, unless otherwise specified or approved. Concrete specified on the basis of compressive strength will be considered satisfactory if the averages of all sets of three consecutive strength test results equal or exceed the specified strength, and no individual strength test result falls below the specified strength by more than

3.8.2.2 Air Content

Air content shall be determined in accordance with ASTM C 173 or ASTM C 231 and MnDOT 2461. ASTM C 231 shall be used with concretes and mortars made with relatively dense natural aggregates. Two tests for air content shall

be made on randomly selected batches of each class of concrete placed during each shift. Additional tests shall be made when excessive variation in concrete workability is reported by the placing foreman or the Government inspector. If results are out of tolerance, the placing foreman shall be notified and he shall take appropriate action to have the air content corrected at the plant. Additional tests for air content will be performed on each truckload of material until such time as the air content is within the tolerance specified.

3.8.2.3 Slump Test

Two slump tests shall be made on randomly selected batches of each class of concrete for every or fraction thereof, of concrete placed during each shift in accordance with MnDOT 2461. Additional tests shall be performed when excessive variation in the workability of the concrete is noted or when excessive crumbling or slumping is noted along the edges of slip-formed concrete.

3.8.3 Thickness Evaluation

The anticipated thickness of the concrete shall be determined prior to placement by passing a template through the formed section or by measuring the depth of opening of the extrusion template of the curb forming machine. If a slip form paver is used for sidewalk placement, the subgrade shall be true to grade prior to concrete placement and the thickness will be determined by measuring each edge of the completed slab.

3.8.4 Surface Evaluation

The finished surface of each category of the completed work shall be uniform in color and free of blemishes and form or tool marks.

3.9 SURFACE DEFICIENCIES AND CORRECTIONS

3.9.1 Thickness Deficiency

When measurements indicate that the completed concrete section is deficient in thickness by more than 6 mm the deficient section will be removed, between regularly scheduled joints, and replaced.

3.9.2 High Areas

In areas not meeting surface smoothness and plan grade requirements, high areas shall be reduced either by rubbing the freshly finished concrete with carborundum brick and water when the concrete is less than 36 hours old or by grinding the hardened concrete with an approved surface grinding machine after the concrete is 36 hours old or more. The area corrected by grinding the surface of the hardened concrete shall not exceed 5 percent of the area of any integral slab, and the depth of grinding shall not exceed Pavement areas requiring grade or surface smoothness corrections in excess of the limits specified above shall be removed and replaced.

3.9.3 Appearance

Exposed surfaces of the finished work will be inspected by the Government and any deficiencies in appearance will be identified. Areas which exhibit excessive cracking, discoloration, form marks, or tool marks or which are otherwise inconsistent with the overall appearances of the work shall be removed and replaced.

-- End of Section --

SECTION TABLE OF CONTENTS

DIVISION 02 - SITE WORK

SECTION 02811

UNDERGROUND SPRINKLER SYSTEMS

11/90

PART 1 GENERAL

1.1 REFERENCES
1.2 PERFORMANCE REQUIREMENTS
1.3 SUBMITTALS
1.4 DELIVERY AND STORAGE
1.5 FIELD MEASUREMENTS

PART 2 PRODUCTS

2.1 MATERIALS AND EQUIPMENT REQUIREMENTS
2.1.1 Standard Products
2.1.2 Nameplates
2.1.3 Extra Stock
2.2 PIPING MATERIALS
2.2.1 Copper Tubing and Associated Fittings
2.2.2 Red Brass Pipe and Associated Fittings
2.2.3 Galvanized Steel Pipe and Associated Fittings
2.2.4 Polyvinyl Chloride (PVC) Pipe, Fittings and Solvent Cement
2.2.4.1 PVC Pipe
2.2.4.2 PVC Fittings
2.2.4.3 Solvent Cement
2.2.5 Polyethylene (PE) Plastic Piping
2.2.6 Dielectric Fittings
2.2.7 Emitter Hose and Distribution Tubing
2.3 SPRINKLER AND EMITTER HEADS
2.3.1 Pop-Up Spray Heads
2.3.1.1 General Requirements
2.3.1.2 Shrubbery Sprinkler Heads
2.3.2 Rotary Pop-Up Sprinklers
2.3.3 Bubbler Sprinkler Heads
2.3.4 Surface Connected Lawn Sprinkler Heads
2.3.5 Emitter Heads
2.4 VALVES
2.4.1 Gate Valves, Less than
2.4.2 Gate Valves, and Larger
2.4.3 Angle Valves, Less Than .
2.4.4 Angle Valves, and Larger
2.4.5 Quick Coupling Valves
2.4.6 Remote Control Valves, Electrical
2.4.7 Drain Valves
2.4.7.1 Manual Valves
2.4.7.2 Automatic Valves
2.4.8 Pressure Regulating Master Valve
2.4.9 Backflow Preventers
2.4.9.1 Pressure Type Vacuum Breaker

2.4.9.2 Reduced Pressure Type Backflow Preventers
2.5 ACCESSORIES AND APPURTENANCES
2.5.1 Valve Keys for Manually Operated Valves
2.5.2 Valve Boxes and Concrete Pads
2.5.2.1 Valve Boxes
2.5.2.2 Concrete Pads
2.5.3 Pressure Gauges
2.5.4 Service Clamps
2.5.5 Water Hammer Arresters
2.5.6 Emitter Head Accessories
2.5.6.1 Strainer
2.5.6.2 Pressure Regulator
2.5.6.3 Riser Adapters
2.5.6.4 Tubing Stakes
2.5.6.5 Emitter Outlet Check Valve (Bug Cap)
2.5.6.6 Access Sleeve
2.5.6.7 Closure Caps
2.6 AUTOMATIC CONTROLLERS, ELECTRICAL
2.7 ELECTRICAL WORK
2.8 CONCRETE MATERIALS
2.9 WATER SUPPLY MAIN MATERIALS
2.10 INSULATING JOINTS

PART 3 EXECUTION

3.1 INSTALLATION
3.1.1 Trenching
3.1.2 Piping System
3.1.2.1 Cover
3.1.2.2 Clearances
3.1.2.3 Minimum Slope
3.1.3 Piping Installation
3.1.3.1 Polyvinyl Chloride (PVC) Pipe
3.1.3.2 Soldered Copper Tubing
3.1.3.3 Threaded Brass or Galvanized Steel Pipe
3.1.3.4 Insulating Joints
3.1.4 Installation of Valves
3.1.4.1 Manual Valves
3.1.4.2 Automatic Valves
3.1.4.3 Drain Valves
3.1.5 Sprinklers and Quick Coupling Valves
3.1.6 Installation of Drip Irrigation System
3.1.6.1 Emitter Hose
3.1.6.2 Emitter Heads
3.1.6.3 Tubing Stakes
3.1.7 Backflow Preventers
3.1.7.1 Pressure Type Vacuum Breaker
3.1.7.2 Reduced Pressure Type
3.1.8 Control Wire and Conduit
3.1.8.1 Wires
3.1.8.2 Loops
3.1.8.3 Expansion and Contraction
3.1.8.4 Splices
3.1.9 Automatic Controller
3.1.10 Thrust Blocks
3.1.11 Backfill
3.1.11.1 Minimum Cover
3.1.11.2 Restoration
3.1.12 Adjustment

3.1.13 Disinfection
3.1.14 Cleaning of Piping
3.2 FIELD TESTS
3.2.1 Hydrostatic Pressure Test
3.2.2 Leakage Tests
3.2.3 Operation Test
3.3 FRAMED INSTRUCTIONS
3.4 FIELD TRAINING
3.5 CLEANUP

-- End of Section Table of Contents --

SECTION 02811

UNDERGROUND SPRINKLER SYSTEMS

11/90

PART 1 GENERAL

1.1 REFERENCES

The publications listed below form a part of this specification to the extent referenced. The publications are referred to in the text by the basic designation only.

AMERICAN SOCIETY FOR TESTING AND MATERIALS (ASTM)

ASTM A 53	(1997) Pipe, Steel, Black and Hot-Dipped, Zinc-Coated, Welded and Seamless
ASTM B 32	(1996) Solder Metal
ASTM B 43	(1996) Seamless Red Brass Pipe, Standard Sizes
ASTM B 88	(1996) Seamless Copper Water Tube
ASTM D 1785	(1996a) Poly(Vinyl Chloride) (PVC) Plastic Pipe, Schedules 40, 80, and 120
ASTM D 2241	(1996a) Poly(Vinyl Chloride) (PVC) Pressure-Rated Pipe (SDR Series)
ASTM D 2287	(1996) Nonrigid Vinyl Chloride Polymer and Copolymer Molding and Extrusion Compounds
ASTM D 2464	(1996a) Threaded Poly(Vinyl Chloride) (PVC) Plastic Pipe Fittings, Schedule 80
ASTM D 2466	(1996a) Poly(Vinyl Chloride) (PVC) Plastic Pipe Fittings, Schedule 40
ASTM D 2564	(1996a) Solvent Cements for Poly(Vinyl Chloride) (PVC) Plastic Piping Systems
ASTM D 2774	(1994) Underground Installation of Thermoplastic Pressure Piping
ASTM D 2855	(1996) Making Solvent-Cemented Joints with Poly(Vinyl Chloride) (PVC) Pipe and Fittings
ASTM D 3261	(1996) Butt Heat Fusion Polyethylene (PE) Plastic Fittings for Polyethylene (PE) Plastic Pipe and Tubing

ASTM F 441	(1995) Chlorinated Poly(Vinyl Chloride) (CPVC) Plastic Pipe, Schedules 40 and 80

AMERICAN SOCIETY OF MECHANICAL ENGINEERS (ASME)

ASME B1.2	(1983; R 1991; Errata May 1992) Gages and Gaging for Unified Inch Screw Threads
ASME B16.3	(1992) Malleable Iron Threaded Fittings
ASME B16.15	(1985; R 1994) Cast Bronze Threaded Fittings Classes 125 and 250
ASME B16.18	(1984; R 1994) Cast Copper Alloy Solder Joint Pressure Fittings
ASME B16.22	(1995) Wrought Copper and Copper Alloy Solder Joint Pressure Fittings
ASME B40.1	(1991) Gauges - Pressure Indicating Dial Type - Elastic Element

AMERICAN SOCIETY OF SANITARY ENGINEERING (ASSE)

ASSE ANSI/ASSE 1012	(1995) Backflow Preventers with Intermediate Atmospheric Vent
ASSE 1013	(1993) Reduced Pressure Principle Backflow Preventers
ASSE 1020	(1974; Rev thru Feb 1989) Pressure Vacuum Breaker Assembly (Recommended for Outdoor Usage)

AMERICAN WATER WORKS ASSOCIATION (AWWA)

AWWA C509	(1994) Resilient-Seated Gate Valves for Water Supply Service
AWWA C901	(1996) Polyethylene (PE) Pressure Pipe and Tubing, 1/2 In. Through 3 In., for Water Service

COMMERCIAL ITEM DESCRIPTIONS (CID)

CID A-A-51145	(Rev C) Flux, Soldering, Non-Electronic, Paste & Liquid

MANUFACTURERS STANDARDIZATION SOCIETY OF THE VALVE AND FITTINGS INDUSTRY (MSS)

MSS SP-80	(1997) Bronze Gate, Globe, Angle and Check Valves
MSS SP-85	(1994) Cast Iron Globe & Angle Valves Flanged and Threaded Ends

NATIONAL ELECTRICAL MANUFACTURERS ASSOCIATION (NEMA)

NEMA ICS 2	(1993) Industrial Control and Systems, Controllers, Contactors, and Overload Relays Rated Not More Than 2,000 Volts AC or 750 Volts DC
NEMA ICS 6	(1993) Industrial Control and Systems, Enclosures

NATIONAL FIRE PROTECTION ASSOCIATION (NFPA)

NFPA 70	(1996; Errata 96-4) National Electrical Code

PLUMBING AND DRAINAGE INSTITURE (PDI)

PDI WH 201	(1992) Water Hammer Arresters

1.2 PERFORMANCE REQUIREMENTS

System shall operate with a minimum water pressure of at connection to building and at the last head in each zone.

1.3 SUBMITTALS

Government approval is required for submittals with a "GA" designation; submittals having an "FIO" designation are for information only. The following shall be submitted in accordance with Section 01330 SUBMITTAL PROCEDURES:

SD-01 Data

Framed Instructions; FIO.

Labels, signs, and templates of operating instructions that are required to be mounted or installed on or near the product for normal, safe operation.

Field Training ; FIO.

Information describing training to be provided, training aids to be used, samples of training materials to be provided, and schedules and notification of training.

Design Analysis and Calculations; GA. Spare Parts; FIO.

Design analyses and pressure calculations verifying that system will provide the irrigation requirements. Spare parts data for each different item of material and equipment specified, after approval of the related submittals and not later than the start of the field tests. The data shall include a complete list of parts and supplies, with current unit prices and source of supply.

SD-04 Drawings

Sprinkler System; GA1.

Detail drawings for valves, sprinkler heads, backflow preventers, automatic

controllers, emitter heads, and water hammer arresters. Drawings shall include a complete list of equipment and materials, and manufacturer's descriptive and technical literature, performance charts and curves, catalog cuts, and installation instructions. Drawings shall also contain complete wiring and schematic diagrams and any other details required to demonstrate that the system has been coordinated and will function as a unit. Drawings shall show proposed system layout, type and number of heads and emitters, zone valves, drain pockets, backflow devices, controllers, and mounting details of controllers. As-built Drawings which provide current factual information showing locations of mains, heads, valves, and controllers including deviations from and amendments to the drawings and changes in the work shall be included.

SD-09 Reports

Field Tests; FIO.

Performance test reports, in booklet form, showing all field tests performed to adjust each component; and all field tests performed to prove compliance with the specified performance criteria, upon completion and testing of the installed system. Each test report shall indicate the final position of control valves.

SD-13 Certificates

Sprinkler System; FIO.

The material supplier's or equipment manufacturer's statement that the supplied material or equipment meets specified requirements. Each certificate shall be signed by an official authorized to certify in behalf of material supplier or product manufacturer and shall identify quantity and date or dates of shipment or delivery to which the certificates apply.

SD-19 Operation and Maintenance Manuals

Sprinkler System; FIO.

Six copies of operation and six copies of maintenance manuals for the equipment furnished. One complete set prior to field testing and the remainder upon acceptance. Manuals shall be approved prior to the field training course. Operating manuals shall detail the step-by-step procedures required for system startup, operation, and shutdown. Operating manuals shall include the manufacturer's name, model number, parts list, and brief description of all equipment and their basic operating features. Maintenance manuals shall list routine maintenance procedures, possible breakdowns and repairs, and troubleshooting guides. Maintenance manuals shall include piping and equipment layout, simplified wiring and control diagrams of the system as installed, and system programming schedule.

1.4 DELIVERY AND STORAGE

All equipment delivered and placed in storage shall be protected from the weather; excessive humidity and temperature variation; direct sunlight (in the case of plastic or rubber materials); and dirt, dust, or other contaminants.

1.5 FIELD MEASUREMENTS

The Contractor shall verify all dimensions in the field and shall advise

the Contracting Officer of any discrepancy before performing the work.

PART 2 PRODUCTS

2.1 MATERIALS AND EQUIPMENT REQUIREMENTS

2.1.1 Standard Products

Materials and equipment shall be the standard products of a manufacturer who has produced similar systems which have performed well for a minimum period of 2 years prior to bid opening. Equipment shall be supported by a service organization that is, in the opinion of the Contracting Officer, reasonably convenient to the site.

2.1.2 Nameplates

Each item of equipment shall have the manufacturer's name, address, type or style, model or serial number, and catalog number on a plate secured to the item of equipment.

2.1.3 Extra Stock

The following extra stock shall be provided: Two sprinkler heads of each size and type, two valve keys for operating manual valves, two wrenches for removing and installing each type of head, two quick coupler keys and hose swivels, and four irrigation controller housing keys.

2.2 PIPING MATERIALS

2.2.1 Copper Tubing and Associated Fittings

Tubing shall conform to requirements of ASTM B 88, Type K. Fittings shall conform to ASME B16.22 and ASME B16.18, solder joint. Solder shall conform to ASTM B 32 95-5 tin-antimony. Flux shall conform to CID A-A-51145, Type I.

2.2.2 Red Brass Pipe and Associated Fittings

Pipe shall conform to requirements of ASTM B 43, regular. Fittings shall be Class 250, cast bronze threaded conforming to the requirements of ASME B16.15.

2.2.3 Galvanized Steel Pipe and Associated Fittings

Pipe shall conform to requirements of ASTM A 53, Schedule 40. Fittings shall be Class 150 conforming to requirements of ASME B16.3.

2.2.4 Polyvinyl Chloride (PVC) Pipe, Fittings and Solvent Cement

2.2.4.1 PVC Pipe

Pipe shall conform to the requirements of ASTM D 1785, PVC 1120 Schedule 40 ; or ASTM D 2241, PVC 1120 SDR 21, Class 200.

2.2.4.2 PVC Fittings

Solvent welded socket type fittings shall conform to requirements of ASTM D 2466, Schedule 40. Threaded type fittings shall conform to requirements of ASTM D 2464, Schedule 80.

2.2.4.3 Solvent Cement

Solvent cement shall conform to the requirements of ASTM D 2564.

2.2.5 Polyethylene (PE) Plastic Piping

Pipe shall conform to AWWA C901, outside diameter base with dimension ratio (DR) of 9.3 to provide minimum pressure rating. Fittings shall conform to ASTM D 3261, DR of 9.3.

2.2.6 Dielectric Fittings

Dielectric fittings shall conform to ASTM F 441, Schedule 80, CPVC threaded pipe nipples, minimum length.

2.2.7 Emitter Hose and Distribution Tubing

Emitter hose and distribution tubing shall conform to ASTM D 2287, maximum inside diameter of minimum wall thickness of plastic extruded from non-rigid chloride, integrally algae-resistant, homogeneous throughout, smooth inside and outside, free from foreign materials, cracks, serrations, blisters and other effects. Slip fittings shall be provided.

2.3 SPRINKLER AND EMITTER HEADS

2.3.1 Pop-Up Spray Heads

2.3.1.1 General Requirements

Pop-up spray heads lay flush with housing, then pop up when water pressure is activated in system. The rising member supporting the nozzle shall be identical on full, half, third or quarter pattern sprinklers so that nozzles will be interchangeable. The sprinkler head shall be designed to be adjustable for coverage and flow. The nozzle shall be removable so head does not have to be removed for flushing or cleaning. Nozzle rises a minimum of above the body. The body shall be constructed with a female thread for installation in a fixed underground pipe system.

2.3.1.2 Shrubbery Sprinkler Heads

Sprinkler heads shall be conical spray with adjustable or non-adjustable coverage and designed for permanent above ground mounting on riser or pop-ups at a height compatible with ground covers. Provide brass nozzles.

2.3.2 Rotary Pop-Up Sprinklers

Sprinklers shall be capable of covering diameter at with a distribution rate of a 75 mm (3 inch) pop-up, trajectory of 25 degrees, and maximum height of spray of 3.048 m (10 feet). Construction shall be high impact molded plastic with filter screen, reducible watering radius, and choice of eight nozzles and have adjustable radius capabilities.

2.3.3 Bubbler Sprinkler Heads

Heads shall be multiple-spray bubbler with adjustable flow and designed for permanent aboveground mounting on risers.

2.3.4 Surface Connected Lawn Sprinkler Heads

Heads shall be an impulse type with or without sled, ring, or wheel base; multiple T Type; a rotary type with sled, spike or wheel base; or oscillating type with wheel or sled base.

2.3.5 Emitter Heads

Emitter heads shall be self-cleaning, pressure compensating diaphragm with one or six self-piercing barbed outlets; each capable of emitting from flow. Emitter body shall be ultraviolet stabilized, algae, and heat resistant plastic construction.

2.4 VALVES

2.4.1 Gate Valves, Less than

Gate valves shall conform to the requirements of MSS SP-80, Type 1, Class 150, threaded ends.

2.4.2 Gate Valves, and Larger

Gate valves shall conform to the requirements of AWWA C509 and have encapsulated resilient wedge, parallel seats, non-rising stems, and open by counterclockwise turning. End connections shall be flanged. Interior construction of valves shall be bronze including stem containing a maximum 2 percent aluminum and maximum 16 percent zinc.

2.4.3 Angle Valves, Less Than .

Angle valves shall conform to the requirements of MSS SP-80, Type 3, Class 150 threaded ends.

2.4.4 Angle Valves, and Larger

Angle valves shall conform to the requirements of MSS SP-85, Type II, Class 250 flanged ends.

2.4.5 Quick Coupling Valves

Quick coupling valves shall have brass parts and shall be two-piece unit consisting of a coupler water seal valve assembly and a removable upper body to allow spring and key track to be serviced without shutdown of main. Lids shall be lockable vinyl with spring for positive closure on key removal.

2.4.6 Remote Control Valves, Electrical

Remote control valves shall be solenoid actuated globe valves of size, suitable for 24 volts, 60 cycle, and designed to provide for shut-off in event of power failure. Valve shall be cast bronze or brass or plastic housing suitable for service at operating pressure with external flow control adjustment for shut-off capability, external plug at diaphragm chamber to enable manual operation, filter in control chamber to prevent valve body clogging with debris, durable diaphragm, and accessibility to internal parts without removing valve from system.

2.4.7 Drain Valves

2.4.7.1 Manual Valves

Manual valves shall conform to requirements of MSS SP-80, Type 3, Class 150 threaded ends for sizes less than and MSS SP-85, Type II, Class 250 flanged ends for sizes and larger.

2.4.7.2 Automatic Valves

Automatic valves shall be brass or plastic, spring loaded ball drip type, and threaded ends, designed to close at pressure head with positive seal at pressure or greater and be open to drain at less than pressure.

2.4.8 Pressure Regulating Master Valve

Pressure regulating master valve shall be automatic mechanical self-cleaning, self-purging control system having an adjustable pressure setting operated by a solenoid on alternating current with 0.70 amperes at 24 volts. Valve shall close slowly and be free of chatter in each diaphragm position, have manual flow stem to adjust closing speed and internal flushing, and [one] [two] inlet tappings capable of being installed as a straight pattern valve. Body shall be cast bronze or brass with removable brass seat serviceable from top without removing valve body from system. Valve shall operate at working pressure and pilot range from

2.4.9 Backflow Preventers

Reduced pressure principle assemblies, double check valve assemblies, atmospheric (nonpressure) type vacuum breakers, and pressure type vacuum breakers shall be tested, approved, and listed in accordance with FCCCHR-01. Backflow preventers with intermediate atmospheric vent shall be in accordance with ASSE ANSI/ASSE 1012. Reduced pressure principle backflow preventers shall be in accordance with ASSE 1013.

2.4.9.1 Pressure Type Vacuum Breaker

Vacuum breaker shall conform to the requirements of ASSE 1020 and shall be [bronze] [brass] construction, with one or two check valves, vacuum relief, inlet and discharge shut-offs valves, field test cocks, and vacuum relief opening of greater diameter than unit.

2.4.9.2 Reduced Pressure Type Backflow Preventers

Backflow preventers shall be flanged cast iron, bronze, or brass mounted gate valve and strainer, 304 stainless steel or bronze, internal parts. Total pressure drop through complete assembly shall be a maximum of at rated flow. Piping shall be red brass pipe and fittings or galvanized steel pipe and fittings. Strainers shall be bronze or brass construction with gasket caps. Units shall have 200-mesh stainless steel screen elements.

2.5 ACCESSORIES AND APPURTENANCES

2.5.1 Valve Keys for Manually Operated Valves

Valve keys shall be diameter by long, tee handles and keyed to fit valves.

2.5.2 Valve Boxes and Concrete Pads

2.5.2.1 Valve Boxes

Valve boxes shall be cast iron, plastic lockable, or precast concrete for each gate valve, manual control valve and remote control valve. Box sizes shall be adjustable for valve used. Word "IRRIGATION" shall be cast on cover. Shaft diameter of box shall be minimum 5-1/4 inches. Cast iron box shall have bituminous coating.

2.5.2.2 Concrete Pads

Concrete pads shall be precast or cast-in-place reinforced concrete construction for reduced pressure type backflow preventers.

2.5.3 Pressure Gauges

Pressure gauges shall conform to requirements of ASME B40.1, single style pressure gauge for water with dia brass or aluminum case, bronze tube, gauge cock, pressure snubber, and siphon. Scale range shall be suitable for irrigation sprinkler systems.

2.5.4 Service Clamps

Service clamps shall be bronze flat, double strap, with neoprene gasket or "O"-ring seal.

2.5.5 Water Hammer Arresters

Water hammer arrester shall conform to the requirements of PDI WH 201; stainless steel construction with an encased and sealed bellows compression chamber.

2.5.6 Emitter Head Accessories

2.5.6.1 Strainer

Strainer shall be provided at inlet to each drip line. Strainer shall have stainless steel screen having equivalent of 140-mesh filtration capacity and incorporate flush valves within strainer to clean screen without disassembling unit.

2.5.6.2 Pressure Regulator

Pressure regulator shall be provided at each drip system if supply pressure exceeds

2.5.6.3 Riser Adapters

Riser adapters shall be provided with a rigid piping system.

2.5.6.4 Tubing Stakes

Tubing stakes shall be plastic coated steel, or other non-corrosive strong material to secure tubing.

2.5.6.5 Emitter Outlet Check Valve (Bug Cap)

Check valves shall be provided at end of each emitter outlet distribution line. Valves shall permit free flow of water with minimum restriction; prevent back siphoning, entry of insects, and contamination into outlet ports.

2.5.6.6 Access Sleeve

Access sleeve shall be provided at buried emitters placed in covered boxes. Lids of access sleeve shall be secured with removable lugs. Drip hose in both vertical and horizontal axis shall be secured.

2.5.6.7 Closure Caps

Closure caps shall be in accordance with manufacturer's recommendations.

2.6 AUTOMATIC CONTROLLERS, ELECTRICAL

Controller shall conform to the requirements of NEMA ICS 2 with [120] [220]-volt single phase service, operating with indicated stations, and grounded chassis. Enclosure shall conform to NEMA ICS 6 Type 3R, with locking hinged cover, wall-mounted. Controller shall be programmed for various schedules by setting switches and dials equipped with the following features: A switch for each day of week for two schedules, allowing each station to be scheduled individually as to days of watering; a minute switch for each station with a positive increment range of 0 to 3 hours, set time within one percent; a switch allowing selected schedules to be repeated after each completion of initial watering schedule and allowing each operation to be scheduled throughout a 24-hour day; a circuit breaker for surge protection; and circuit for a 9-volt rechargeable NiCad battery.

2.7 ELECTRICAL WORK

Wiring and rigid conduit for electrical power shall be in accordance with NFPA 70, and Section 16375 ELECTRICAL DISTRIBUTION SYSTEM, UNDERGROUND.

2.8 CONCRETE MATERIALS

Concrete shall have a minimum compressive strength of at 28 days as specified in Section 03300, CAST-IN-PLACE STRUCTURAL CONCRETE.

2.9 WATER SUPPLY MAIN MATERIALS

Tapping sleeves, service cut off valves, and connections to water supply mains shall be in accordance with Section 02510 WATER DISTRIBUTION SYSTEM.

2.10 INSULATING JOINTS

Insulating joints and dielectric fittings shall be in accordance with Section 02510 WATER DISTRIBUTION SYSTEM.

PART 3 EXECUTION

3.1 INSTALLATION

Sprinkler system shall be installed after site grading has been completed. Excavation, trenching, and backfilling for sprinkler system shall be in accordance with the applicable provisions of Section 02316, EXCAVATION, TRENCHING, AND BACKFILLING FOR UTILITIES SYSTEMS, except as modified herein.

3.1.1 Trenching

Trench around roots shall be hand excavated to pipe grade when roots of diameter or greater are encountered. Trench width shall be minimum or 1-1/2 times diameter of pipe, whichever is wider. Backfill shall be hand

tamped over excavation. When rock is encountered, trench shall be excavated deeper and backfilled with silty sand (SM) or well-graded sand (SW) to pipe grade. Trenches shall be kept free of obstructions and debris that would damage pipe. Subsoil shall not be mixed with topsoil. Existing concrete walks, drives and other obstacles shall be bored at a depth conforming to bottom of adjacent trenches. Pipe sleeves for bored pipe shall be two pipe diameters larger than sprinkler pipe.

3.1.2 Piping System

3.1.2.1 Cover

Underground piping shall be installed to meet the minimum depth of backfill cover specified.

3.1.2.2 Clearances

Minimum horizontal clearances between lines shall be (4 inches) for pipe and less; for pipe and larger. Minimum vertical clearances between lines shall be

3.1.2.3 Minimum Slope

Minimum slope shall be in direction of drain valves.

3.1.3 Piping Installation

3.1.3.1 Polyvinyl Chloride (PVC) Pipe

a. Solvent-cemented joints shall conform to the requirements of ASTM D 2855.

b. Threaded joints shall be full cut with a maximum of three threads remaining exposed on pipe and nipples. Threaded joints shall be made tight without recourse to wicks or fillers, other than polytetrafluoroethylene thread tape.

c. Piping shall be joined to conform with requirements of ASTM D 2774 or ASTM D 2855, and pipe manufacturer's instructions. Pipe shall be installed in a serpentine (snaked) manner to allow for expansion and contraction in trench before backfilling. Pipes shall be installed at temperatures over 40 degrees F.

3.1.3.2 Soldered Copper Tubing

Pipe shall be reamed and burrs removed. Contact surfaces of joint shall be cleaned and polished. Flux shall be applied to male and female ends. End of tube shall be inserted into fittings full depth of socket. After soldering, a solder bead shall show continuously around entire joint circumference. Excess acid flux shall be removed from tubings and fittings.

3.1.3.3 Threaded Brass or Galvanized Steel Pipe

Prior to installation, pipe shall be reamed. Threads shall be cut in conformance with ASME B1.2. Pipe joint compound shall be applied to male end only.

3.1.3.4 Insulating Joints

Insulating and dielectric fittings shall be provided where pipes of dissimilar metal are joined and at connections to water supply mains as shown. Installation shall be in accordance with Section 02510 WATER DISTRIBUTION SYSTEM.

3.1.4 Installation of Valves

3.1.4.1 Manual Valves

Valves shall be installed in a valve box extending from grade to below valve body, with a minimum of cover measured from finish grade to top of valve stem.

3.1.4.2 Automatic Valves

Valve shall be set plumb in a valve box extending from grade to below valve body, with minimum of cover measured from grade to top of valve. Automatic valves shall be installed beside sprinkler heads with a valve box.

3.1.4.3 Drain Valves

Entire system shall be manually or automatically drainable. Low points of system shall be equipped with drain valve draining into an excavation containing gravel. Gravel shall be covered with building paper then backfilled with excavated material and of topsoil.

3.1.5 Sprinklers and Quick Coupling Valves

Sprinklers and valves shall be installed plumb and level with terrain.

3.1.6 Installation of Drip Irrigation System

3.1.6.1 Emitter Hose

Emitter laterals shall be buried deep. Connections shall be solvent welded in accordance with manufacturer's recommendation to standard weight Schedule 40 PVC fittings and bushings. Hose shall be installed in a serpentine manner. When cutting hose, shearing tool such as a pipe cutter, knife, or shears shall be used. Manufacturer's recommended tool and procedures when punching hose for emitters shall be followed.

3.1.6.2 Emitter Heads

Emitters shall be installed in a plastic emitter box. Emitter on a rigid PVC nipple shall be connected to PVC drip lateral with a tee or elbow. Tubing shall be attached to barbed fitting and daylight distribution tubing at root ball secured with stake, with bug cap at end of secured distribution tubing. After installing emitters and before operating system, end of drip lateral shall be opened and flushed clean. The number of emitters on a line shall not exceed manufacturer's recommendations for that hose or distribution tubing size and length.

3.1.6.3 Tubing Stakes

Main irrigation line shall be secured with stakes where line is aboveground. Stakes shall be spaced to ensure that hose does not shift location in presence of foot traffic, operations, gravity on slope installations, or environmental effects. Discharge of the emitter distribution tubing shall be staked to ensure that discharge point of

emitter will be maintained at specified position in relation to plant material to be irrigated.

3.1.7 Backflow Preventers

Backflow preventer shall be installed in new connection to existing water distribution system, between connection and control valves. Backflow preventer shall be installed with concrete pads.

3.1.7.1 Pressure Type Vacuum Breaker

Pressure type vacuum breaker shall be installed above highest head.

3.1.7.2 Reduced Pressure Type

Pipe lines shall be flushed prior to installing reduced pressure device; device shall be protected by a strainer located upstream. Device shall not be installed in pits or where any part of device could become submerged in standing water.

3.1.8 Control Wire and Conduit

3.1.8.1 Wires

Low voltage wires may be buried beside pipe in same trench. Rigid conduit shall be provided where wires run under paving. Wires shall be number tagged at key locations along main to facilitate service. One control circuit shall be provided for each zone and a circuit to control sprinkler system.

3.1.8.2 Loops

A loop of wire shall be provided at each valve where controls are connected.

3.1.8.3 Expansion and Contraction

Multiple tubes or wires shall be bundled and taped together at intervals with loop for expansion and contraction.

3.1.8.4 Splices

Electrical splices shall be waterproof.

3.1.9 Automatic Controller

Exact field location of controllers shall be determined before installation. Coordinate the electrical service to these locations. Install in accordance with manufacturer's recommendations and NFPA 70.

3.1.10 Thrust Blocks

Concrete shall be placed so that sides subject to thrust or load are against undisturbed earth, and valves and fittings are serviceable after concrete has set. Thrust blocks shall be as specified in Section 02510 WATER DISTRIBUTION SYSTEM.

3.1.11 Backfill

3.1.11.1 Minimum Cover

Depth of cover shall be for pipe or smaller; for pipe; for pipe or larger; for pipes under traffic loads, and freezing temperatures; and for low-voltage wires. Remainder of trench or pipe cover shall be filled to within of top with excavated soil, and compact soil with plate hand-held compactors to same density as undisturbed adjacent soil.

3.1.11.2 Restoration

Top shall be filled with topsoil and compacted with same density as surrounding soil. Lawns and plants shall be restored in accordance with Sections 02922 SODDING, and Section 02930 EXTERIOR PLANTING. Pavements shall be restored in accordance with Section 02770.CONCRETE SIDEWALKS AND CURBS AND GUTTERS.

3.1.12 Adjustment

After grading, seeding, and rolling of planted areas, sprinkler heads shall be adjusted flush with finished grade. Adjustments shall be made by providing new nipples of proper length or by use of heads having an approved device, integral with head, which will permit adjustment in height of head without changing piping.

3.1.13 Disinfection

Sprinkler system fed from a potable water system shall be disinfected upstream of backflow preventer in accordance with Section 02510 WATER DISTRIBUTION SYSTEM.

3.1.14 Cleaning of Piping

Prior to the hydrostatic and operation tests, the interior of the pipe shall be flushed with clean water until pipe is free of all foreign materials. Flushing and cleaning out of system pipe, valves, and components shall not be considered completed until witnessed and accepted by Contracting Officer.

3.2 FIELD TESTS

All instruments, equipment, facilities, and labor required to conduct the tests shall be provided by Contractor.

3.2.1 Hydrostatic Pressure Test

Piping shall be tested hydrostatically before backfilling and proved tight at a hydrostatic pressure of without pumping for a period of one hour with an allowable pressure drop of If hydrostatic pressure cannot be held for a minimum of 4 hours, Contractor shall make adjustments or replacements and the tests repeated until satisfactory results are achieved and accepted by the Contracting Officer.

3.2.2 Leakage Tests

Leakage tests for service main shall be in accordance with Section 02510 WATER DISTRIBUTION SYSTEM.

3.2.3 Operation Test

At conclusion of pressure test, sprinkler heads or emitter heads, quick coupling assemblies, and hose valves shall be installed and entire system tested for operation under normal operating pressure. Operation test consists of the system operating through at least one complete programmed cycle for all areas to be sprinkled.

3.3 FRAMED INSTRUCTIONS

Framed instructions containing wiring and control diagrams under glass or in laminated plastic shall be posted where directed. Condensed operating instructions, prepared in typed form, shall be framed as specified above and posted beside the diagrams. The framed instructions shall be posted before acceptance testing of the system. After as-built drawings are approved by Contracting Officer, controller charts and programming schedule shall be prepared. One chart for each controller shall be supplied. Chart shall be a reduced drawing of actual as-built system that will fit the maximum dimensions inside controller housing. Black line print for chart and a different pastel or transparent color shall indicate each station area of coverage. After chart is completed and approved for final acceptance, chart shall be sealed between two 20 mil pieces of clear plastic.

3.4 FIELD TRAINING

A field training course shall be provided for designated operating and maintenance staff members. Training shall be provided for a total period of eight hours of normal working time and shall start after the system is functionally complete but prior to final acceptance tests. Field training shall cover all of the items contained in the operating and maintenance manuals.

3.5 CLEANUP

Upon completion of installation of system, all debris and surplus materials resulting from the work shall be removed.

-- End of Section --

SECTION TABLE OF CONTENTS

DIVISION 02 - SITE WORK

SECTION 02921

SEEDING

06/98

PART 1 GENERAL

1.1 REFERENCES
1.2 SUBMITTALS
1.3 SOURCE INSPECTION
1.4 DELIVERY, INSPECTION, STORAGE, AND HANDLING
1.4.1 Delivery
1.4.1.1 Delivered Topsoil
1.4.1.2 Soil Amendments
1.4.1.3 Pesticides
1.4.2 Inspection
1.4.3 Storage
1.4.4 Handling

PART 2 PRODUCTS

2.1 SEED
2.1.1 Seed Classification
2.1.2 Permanent Seed Species and Mixtures
2.1.3 Not Used
2.1.4 Quality
2.1.5 Seed Mixing
2.1.6 Substitutions
2.2 TOPSOIL
2.3 SOIL AMENDMENTS
2.3.1 pH Adjuster
2.3.1.1 Limestone
2.3.1.2 Hydrated Lime
2.3.1.3 Burnt Lime
2.3.2 Fertilizer
2.3.3 Nitrogen Carrier Fertilizer
2.3.4 Organic Material
2.3.4.1 Bonemeal
2.3.4.2 Rotted Manure
2.3.4.3 Decomposed Wood Derivatives
2.3.4.4 Recycled Compost
2.3.4.5 Worm Castings
2.3.5 Soil Conditioner
2.3.5.1 Sand
2.3.5.2 Super Absorbent Polymers
2.3.5.3 Calcined Clay
2.3.5.4 Gypsum
2.3.5.5 Expanded Shale, Clay, or Slate (ESCS)
2.4 MULCH
2.4.1 Straw
2.4.2 Hay

2.4.3 Wood Cellulose Fiber
2.4.4 Paper Fiber
2.5 ASPHALT ADHESIVE
2.6 WATER
2.7 PESTICIDE
2.8 SURFACE EROSION CONTROL MATERIAL
2.8.1 Surface Erosion Control Blanket
2.8.2 Surface Erosion Control Fabric
2.8.3 Surface Erosion Control Net
2.8.4 Surface Erosion Control Chemicals
2.8.5 Hydrophilic Colloids
2.8.6 Erosion Control Material Anchors

PART 3 EXECUTION

3.1 INSTALLING SEED TIME AND CONDITIONS
3.1.1 Seeding Time
3.1.2 Seeding Conditions
3.1.3 Equipment Calibration
3.1.4 Soil Test
3.2 SITE PREPARATION
3.2.1 Finished Grade and Topsoil
3.2.2 Application of Soil Amendments
3.2.2.1 Applying pH Adjuster
3.2.2.2 Applying Fertilizer
3.2.2.3 Applying Soil Conditioner
3.2.2.4 Applying Super Absorbent Polymers
3.2.3 Tillage
3.2.4 Prepared Surface
3.2.4.1 Preparation
3.2.4.2 Lawn Area Debris
3.2.4.3 Field Area Debris
3.2.4.4 Protection
3.3 INSTALLATION
3.3.1 Installing Seed
3.3.1.1 Broadcast Seeding
3.3.1.2 Not Used
3.3.1.3 Rolling
3.3.2 Not Used
3.3.3 Mulching
3.3.3.1 Hay or Straw Mulch
3.3.3.2 Mechanical Anchor
3.3.3.3 Asphalt Adhesive Tackifier
3.3.3.4 Non-Asphaltic Tackifier
3.3.3.5 Asphalt Adhesive Coated Mulch
3.3.3.6 Wood Cellulose Fiber, Paper Fiber, and Recycled Paper
3.3.4 Watering Seed
3.4 SURFACE EROSION CONTROL
3.4.1 Surface Erosion Control Material
3.4.2 Not Used
3.4.2.1 Soil Amendments
3.4.2.2 Remaining Soil Amendments
3.5 QUANTITY CHECK
3.6 APPLICATION OF PESTICIDE
3.6.1 Technical Representative
3.6.2 Application
3.7 RESTORATION AND CLEAN UP
3.7.1 Restoration
3.7.2 Clean Up

3.8 PROTECTION OF INSTALLED AREAS
3.9 SEED ESTABLISHMENT PERIOD
3.9.1 Commencement
3.9.2 Satisfactory Stand of Grass Plants
3.9.2.1 Lawn Area
3.9.2.2 Field Area
3.9.3 Maintenance During Establishment Period
3.9.3.1 Mowing
3.9.3.2 Post-Fertilization
3.9.3.3 Pesticide Treatment
3.9.3.4 Repair or Reinstall
3.9.3.5 Maintenance Record

-- End of Section Table of Contents --

SECTION 02921

SEEDING
06/98

PART 1 GENERAL

1.1 REFERENCES

The publications listed below form a part of this specification to the extent referenced. The publications are referred to in the text by basic designation only.

AGRICULTURAL MARKETING SERVICE (AMS)

AMS-01	(Aug 95) Federal Seed Act Regulations Part 201

AMERICAN SOCIETY FOR TESTING AND MATERIALS (ASTM)

ASTM C 602	(1995a) Agricultural Liming Materials
ASTM D 977	(1991) Emulsified Asphalt
ASTM D 2028	(1976; R 1992) Cutback Asphalt (Rapid-Curing Type)
ASTM D 4972	(1995a) pH of Soils
ASTM D 5268	(1992; R 1996) Topsoil Used for Landscaping Purposes
ASTM D 5883	(1996) Standard Guide for Use of Rotary Kiln Produced Expanded Shale, Clay or Slate (ESCS) as a Mineral Amendment in Topsoil Used for Landscaping and Related Purposes

1.2 SUBMITTALS

Government approval is required for submittals with a "GA" designation; submittals having an "FIO" designation are for information only. The following shall be submitted in accordance with Section 01330 SUBMITTAL PROCEDURES:

SD-01 Data

Equipment; FIO. Surface Erosion Control Material; FIO. Chemical Treatment Material; FIO.

Manufacturer's literature including physical characteristics, application and installation instructions for equipment, surface erosion control material and chemical treatment material.

SD-08 Statements

Delivery; FIO.

Delivery schedule.

Finished Grade and Topsoil; FIO.

Finished grade status.

Topsoil; FIO.

Availability of topsoil from the stripping and stock piling operation.

SD-09 Reports

Soil Test; FIO.

Certified reports of inspections and laboratory tests, prepared by an independent testing agency, including analysis and interpretation of test results. Each report shall be properly identified. Test methods used and compliance with recognized test standards shall be described.

SD-13 Certificates

Seed; FIO. Topsoil; FIO. pH Adjuster; FIO. Fertilizer; FIO. Organic Material; FIO. Soil Conditioner; FIO. Mulch; FIO.

Prior to the delivery of materials, certificates of compliance attesting that materials meet the specified requirements. Certified copies of the material certificates shall include the following:

a. Seed. Classification, botanical name, common name, percent pure live seed, minimum percent germination and hard seed, maximum percent weed seed content, and date tested.

b. Topsoil. Particle size, pH, organic matter content, textural class, soluble salts, chemical and mechanical analyses.

c. pH Adjuster. Calcium carbonate equivalent and sieve analysis.

d. Fertilizer. Chemical analysis and composition percent.

e. Organic Material: Composition and source.

f. Soil Conditioner: Composition and source.

g. Mulch: Composition and source.

h. Asphalt Adhesive: Composition.

i. Pesticide. EPA registration number and registered uses.

SD-14 Samples

Mulch; FIO.

A sample.

SD-18 Records

Quantity Check; FIO.

Bag count or bulk weight measurements of material used compared with area covered to determine the application rate and quantity installed.

Seed Establishment Period; FIO.

Calendar time period for the seed establishment period. When there is more than one seed establishment period, the boundaries of the seeded area covered for each period shall be described.

Maintenance Record; GA.

Maintenance work performed, area repaired or reinstalled, diagnosis for unsatisfactory stand of grass plants.

Application of Pesticide; GA.

Pesticide treatment plan with sequence of treatment work with dates and times. The pesticide trade name, EPA registration number, chemical composition, formulation, concentration of original and diluted material, application rate of active ingredients, method of application, area treated, amount applied; and the name and state license number of the state certified applicator shall be included.

1.3 SOURCE INSPECTION

The source of delivered topsoil shall be subject to inspection.

1.4 DELIVERY, INSPECTION, STORAGE, AND HANDLING

1.4.1 Delivery

A delivery schedule shall be provided at least 10 calendar days prior to the first day of delivery.

1.4.1.1 Delivered Topsoil

Prior to the delivery of any topsoil, its availability shall be verified in paragraph TOPSOIL. A soil test shall be provided for topsoil delivered to the site.

1.4.1.2 Soil Amendments

Soil amendments shall be delivered to the site in the original, unopened containers bearing the manufacturer's chemical analysis. In lieu of containers, soil amendments may be furnished in bulk. A chemical analysis shall be provided for bulk deliveries.

1.4.1.3 Pesticides

Pesticide material shall be delivered to the site in the original, unopened containers bearing legible labels indicating the EPA registration number and the manufacturer's registered uses.

1.4.2 Inspection

Seed shall be inspected upon arrival at the job site for conformity to

species and quality. Seed that is wet, moldy, or bears a test date five months or older, shall be rejected. Other materials shall be inspected for compliance with specified requirements. The following shall be rejected: open soil amendment containers or wet soil amendments; topsoil that contains slag, cinders, stones, lumps of soil, sticks, roots, trash or other material over a minimum diameter; and topsoil that contains viable plants and plant parts. Unacceptable materials shall be removed from the job site.

1.4.3 Storage

Materials shall be stored in designated areas. Seed, lime, and fertilizer shall be stored in cool, dry locations away from contaminants. Chemical treatment material shall be stored according to manufacturer's instructions and not with seeding operation materials.

1.4.4 Handling

Except for bulk deliveries, materials shall not be dropped or dumped from vehicles.

PART 2 PRODUCTS

2.1 SEED

2.1.1 Seed Classification

State-certified seed of the latest season's crop shall be provided in original sealed packages bearing the producer's guaranteed analysis for percentages of mixture, purity, germination, hard seed, weed seed content, and inert material. Labels shall be in conformance with AMS-01 and applicable state seed laws.

2.1.2 Permanent Seed Species and Mixtures

Permanent seed species and mixtures shall be MN DOT Mix #65A, proportioned by weight as follows:

Botanical Name	Common Name	Mixture Percent by Weight	Percent Pure Live Seed
Poa pratensis	Bluegrass, Elite Kentucky	25.0	85.0
Poa pratensis	Bluegrass, Improved Kentucky	25.0	85.0
Poa pratensis	Bluegrass, L.M. Kentucky	25.0	85.0
Festuca rubra	Red Fescue	15.0	85.0
Lolium perene	Perenial Rye grass	10.0	90.0

2.1.3 Not Used

2.1.4 Quality

Weed seed shall be a maximum 1 percent by weight of the total mixture.

2.1.5 Seed Mixing

The mixing of seed may be done by the seed supplier prior to delivery, or on site as directed.

2.1.6 Substitutions

Substitutions will not be allowed without written request and approval from the Contracting Officer.

2.2 TOPSOIL

Topsoil shall be as defined in ASTM D 5268. When available, the topsoil shall be the existing surface soil stripped and stockpiled onsite in accordance with Section 02300 EARTHWORK. When additional topsoil is required beyond the available topsoil from the stripping operation, topsoil shall be delivered and amended as recommended by the soil test for the seed specified. Topsoil shall be free from slag, cinders, stones, lumps of soil, sticks, roots, trash or other material over a minimum diameter. Topsoil shall be free from viable plants and plant parts.

2.3 SOIL AMENDMENTS

Soil amendments shall consist of pH adjuster, fertilizer, organic material and soil conditioners meeting the following requirements. Vermiculite shall not be used.

2.3.1 pH Adjuster

The pH adjuster shall be an agricultural liming material in accordance with ASTM C 602. These materials may be burnt lime, hydrated lime, ground limestone, sulfur, or shells. The pH adjuster shall be used to create a favorable soil pH for the plant material specified.

2.3.1.1 Limestone

Limestone material shall contain a minimum calcium carbonate equivalent of 80 percent. Gradation: A minimum 95 percent shall pass through a No. 8 sieve and a minimum 55 percent shall pass through a No. 60 sieve. To raise soil pH, ground limestone shall be used.

2.3.1.2 Hydrated Lime

Hydrated lime shall contain a minimum calcium carbonate equivalent of 110 percent. Gradation: A minimum 100 percent shall pass through a sieve and

a minimum 97 percent shall pass through a sieve.

2.3.1.3 Burnt Lime

Burnt lime shall contain a minimum calcium carbonate equivalent of 140 percent. Gradation: A minimum 95 percent shall pass through a sieve and a minimum 35 percent shall pass through a sieve.

2.3.2 Fertilizer

It shall be as recommended by the soil test. Fertilizer shall be controlled release commercial grade, free flowing, uniform in composition, and consist of a nitrogen-phosphorus-potassium ratio. The fertilizer shall be derived from sulphur coated urea, urea formaldehyde, plastic or polymer coated pills, or isobutylenediurea (IBDU). Fertilizer shall be balanced with the inclusion of trace minerals and micro-nutrients.

2.3.3 Nitrogen Carrier Fertilizer

It shall be as recommended by the soil test. Nitrogen carrier fertilizer shall be commercial grade, free flowing, and uniform in composition. The fertilizer may be a liquid nitrogen solution.

2.3.4 Organic Material

Organic material shall consist of either bonemeal, rotted manure, decomposed wood derivatives, recycled compost, or worm castings.

2.3.4.1 Bonemeal

Bonemeal shall be finely ground, steamed bone product containing from 2 to 4 percent nitrogen and 16 to 40 percent phosphoric acid.

2.3.4.2 Rotted Manure

Rotted manure shall be unleached horse, chicken or cattle manure containing a maximum 25 percent by volume of straw, sawdust, or other bedding materials. It shall contain no chemicals or ingredients harmful to plants. The manure shall be heat treated to kill weed seeds and be free of stones, sticks, and soil.

2.3.4.3 Decomposed Wood Derivatives

Decomposed wood derivatives shall be ground bark, sawdust, yard trimmings, or other wood waste material that is free of stones, sticks, soil, and toxic substances harmful to plants, and is fully composted or stabilized with nitrogen.

2.3.4.4 Recycled Compost

Compost shall be a well decomposed, stable, weed free organic matter source. Compost shall be derived from food; agricultural or industrial residuals; biosolids (treated sewage sludge); yard trimmings; or source-separated or mixed solid waste. The compost shall possess no objectionable odors and shall not resemble the raw material from which it was derived. The material shall not contain substances toxic to plants. Gradation: The compost material shall pass through a 3/8 inch screen, possess a pH of 5.5 to 8.0, and have a moisture content between 35-55 percent by weight. The material shall not contain more than 1 percent by

weight of man-made foreign matter. Compost shall be cleaned of plastic materials larger than in length.

2.3.4.5 Worm Castings

Worm castings shall be screened from worms and food source, and shall be commercially packaged.

2.3.5 Soil Conditioner

Soil conditioner shall be sand, super absorbent polymers, calcined clay, or gypsum for use singly or in combination to meet the requirements of the soil test.

2.3.5.1 Sand

Sand shall be clean and free of toxic materials. Gradation: A minimum 95 percent by weight shall pass a sieve and a minimum 10 percent by weight shall pass a sieve. Greensand shall be balanced with the inclusion of trace minerals and nutrients.

2.3.5.2 Super Absorbent Polymers

To improve water retention in soils, super absorbent polymers shall be sized and applied according to the manufacturer's recommendations. Polymers shall be added as a soil amendment and be cross-linked polyacrylamide, with an absorption capacity of 250-400 times its weight. Polymers shall also be added to the seed and be a starch grafted polyacrylonitrite, with graphite added as a tacky sticker. It shall have an absorption capacity of 100 plus times its weight.

2.3.5.3 Calcined Clay

Calcined clay shall be granular particles produced from montmorillonite clay calcined to a minimum temperature of Gradation: A minimum 90 percent shall pass a sieve; a minimum 99 percent shall be retained on a sieve; and a maximum 2 percent shall pass a sieve. Bulk density: A maximum .

2.3.5.4 Gypsum

Gypsum shall be commercially packaged, free flowing, and a minimum 95 percent calcium sulfate by volume.

2.3.5.5 Expanded Shale, Clay, or Slate (ESCS)

Rotary kiln produced ESCS material shall be in conformance with ASTM D 5883.

2.4 MULCH

Mulch shall be free from weeds, mold, and other deleterious materials. Mulch materials shall be native to the region.

2.4.1 Straw

Straw shall be stalks from oats, wheat, rye, barley, or rice, furnished in air-dry condition and with a consistency for placing with commercial mulch-blowing equipment.

2.4.2 Hay

Hay shall be native hay, sudan-grass hay, broomsedge hay, or other herbaceous mowings, furnished in an air-dry condition suitable for placing with commercial mulch-blowing equipment.

2.4.3 Wood Cellulose Fiber

Wood cellulose fiber shall not contain any growth or germination-inhibiting factors and shall be dyed an appropriate color to facilitate placement during application. Composition on air-dry weight basis: 9 to 15 percent moisture, pH range from 4.5 to 6.0.

2.4.4 Paper Fiber

Paper fiber mulch shall be recycled news print that is shredded for the purpose of mulching seed.

2.5 ASPHALT ADHESIVE

Asphalt adhesive shall conform to the following: Emulsified asphalt, conforming to ASTM D 977, Grade SS-1; and cutback asphalt, conforming to ASTM D 2028, Designation RC-70.

2.6 WATER

Water shall be the responsibility of the Contractor, unless otherwise noted. Water shall not contain elements toxic to plant life.

2.7 PESTICIDE

Pesticide shall be insecticide, herbicide, fungicide, nematocide, rodenticide or miticide. For the purpose of this specification, a soil fumigant shall have the same requirements as a pesticide. The pesticide material shall be EPA registered and approved.

2.8 SURFACE EROSION CONTROL MATERIAL

Surface erosion control material shall conform to the following:

2.8.1 Surface Erosion Control Blanket

Blanket shall be machine produced mat of wood excelsior formed from a web of interlocking wood fibers; covered on one side with either knitted straw blanket-like mat construction; covered with biodegradable plastic mesh; or interwoven biodegradable thread, plastic netting, or twisted kraft paper cord netting.

2.8.2 Surface Erosion Control Fabric

Fabric shall be knitted construction of polypropylene yarn with uniform mesh openings square with strips of biodegradable paper. Filler paper strips shall have a minimum life of 6 months.

2.8.3 Surface Erosion Control Net

Net shall be heavy, twisted jute mesh, weighing approximately and wide with mesh openings of approximately square.

2.8.4 Surface Erosion Control Chemicals

Chemicals shall be high-polymer synthetic resin or cold-water emulsion of selected petroleum resins.

2.8.5 Hydrophilic Colloids

Hydrophilic colloids shall be physiologically harmless to plant and animal life without phytotoxic agents. Colloids shall be naturally occurring, silicate powder based, and shall form a water insoluble membrane after curing. Colloids shall resist mold growth.

2.8.6 Erosion Control Material Anchors

Erosion control anchors shall be as recommended by the manufacturer.

PART 3 EXECUTION

3.1 INSTALLING SEED TIME AND CONDITIONS

3.1.1 Seeding Time

Seed shall be installed from April 1 to June 1 for spring establishment; from July 20 to September 20 for summer establishment; and from October 20 to November 1 for fall establishment.

3.1.2 Seeding Conditions

Seeding operations shall be performed only during periods when beneficial results can be obtained. When drought, excessive moisture, or other unsatisfactory conditions prevail, the work shall be stopped when directed. When special conditions warrant a variance to the seeding operations, proposed alternate times shall be submitted for approval.

3.1.3 Equipment Calibration

Immediately prior to the commencement of seeding operations, calibration tests shall be conducted on the equipment to be used. These tests shall confirm that the equipment is operating within the manufacturer's specifications and will meet the specified criteria. The equipment shall be calibrated a minimum of once every day during the operation. The calibration test results shall be provided within 1 week of testing.

3.1.4 Soil Test

Delivered topsoil, existing soil in smooth graded areas, and stockpiled topsoil shall be tested in accordance with ASTM D 5268 and ASTM D 4972 for determining the particle size, pH, organic matter content, textural class, chemical analysis, soluble salts analysis, and mechanical analysis. Sample collection on site shall be random over the entire site. Sample collection for stockpiled topsoil shall be at different levels in the stockpile. The soil shall be free from debris, noxious weeds, toxic substances, or other materials harmful to plant growth. The test shall determine the quantities and type of soil amendments required to meet local growing conditions for the seed species specified.

3.2 SITE PREPARATION

3.2.1 Finished Grade and Topsoil

The Contractor shall verify that finished grades are as indicated on drawings, and the placing of topsoil, smooth grading, and compaction requirements have been completed in accordance with Section 02300 EARTHWORK, prior to the commencement of the seeding operation.

3.2.2 Application of Soil Amendments

3.2.2.1 Applying pH Adjuster

The pH adjuster shall be applied as recommended by the soil test. The pH adjuster shall be incorporated into the soil to a maximum depth or may be incorporated as part of the tillage operation.

3.2.2.2 Applying Fertilizer

The fertilizer shall be applied as recommended by the soil test. Fertilizer shall be incorporated into the soil to a maximum depth or may be incorporated as part of the tillage or hydroseeding operation.

3.2.2.3 Applying Soil Conditioner

The soil conditioner shall be as recommended by the soil test. The soil conditioner shall be spread uniformly over the soil a minimum depth and thoroughly incorporated by tillage into the soil to a maximum depth.

3.2.2.4 Applying Super Absorbent Polymers

Polymers shall be spread uniformly over the soil as recommended by the manufacturer and thoroughly incorporated by tillage into the soil to a maximum depth.

3.2.3 Tillage

Soil on slopes up to a maximum 3-horizontal-to-1-vertical shall be tilled to a minimum depth. On slopes between 3-horizontal-to-1-vertical and 1-horizontal-to-1 vertical, the soil shall be tilled to a minimum depth by scarifying with heavy rakes, or other method. Rototillers shall be used where soil conditions and length of slope permit. On slopes 1-horizontal-to-1 vertical and steeper, no tillage is required. Drainage patterns shall be maintained as indicated on drawings. Areas compacted by construction operations shall be completely pulverized by tillage. Soil used for repair of surface erosion or grade deficiencies shall conform to topsoil requirements. The pH adjuster, fertilizer, and soil conditioner may be applied during this procedure.

3.2.4 Prepared Surface

3.2.4.1 Preparation

The prepared surface shall be a maximum below the adjoining grade of any surfaced area. New surfaces shall be blended to existing areas. The prepared surface shall be completed with a light raking to remove debris.

3.2.4.2 Lawn Area Debris

Debris and stones over a minimum in any dimension shall be removed from the surface.

3.2.4.3 Field Area Debris

Debris and stones over a minimum in any dimension shall be removed from the surface.

3.2.4.4 Protection

Areas with the prepared surface shall be protected from compaction or damage by vehicular or pedestrian traffic and surface erosion.

3.3 INSTALLATION

Prior to installing seed, any previously prepared surface compacted or damaged shall be reworked to meet the requirements of paragraph SITE PREPARATION. Seeding operations shall not take place when the wind velocity will prevent uniform seed distribution.

3.3.1 Installing Seed

Seeding method shall be Broadcast Seeding. Seeding procedure shall ensure even coverage. Gravity feed applicators, which drop seed directly from a hopper onto the prepared soil, shall not be used because of the difficulty in achieving even coverage, unless otherwise approved. Absorbent polymer powder shall be mixed with the dry seed at the rate recommended by the manufacturer.

3.3.1.1 Broadcast Seeding

Seed shall be uniformly broadcast at the rate of 100 using broadcast seeders. Half the total rate of seed application shall be broadcast in 1 direction, with the remainder of the seed rate broadcast at 90 degrees from the first direction. Seed shall be covered a maximum depth by disk harrow, steel mat drag, cultipacker, or other approved device.

3.3.1.2 Not Used

3.3.1.3 Rolling

The entire area shall be firmed with a roller not exceeding 90 pounds per foot roller width. Slopes over a maximum 3-horizontal-to-1 vertical shall not be rolled. Areas seeded with seed drills equipped with rollers shall not be rolled.

3.3.2 Not Used

3.3.3 Mulching

3.3.3.1 Hay or Straw Mulch

Hay or straw mulch shall be spread uniformly at the rate of . Mulch shall be spread by hand, blower-type mulch spreader, or other approved method. Mulching shall be started on the windward side of relatively flat areas or on the upper part of steep slopes, and continued uniformly until the area is covered. The mulch shall not be bunched or clumped. Sunlight shall not be completely excluded from penetrating to the ground surface. All areas installed with seed shall be mulched on the same day as the seeding. Mulch shall be anchored immediately following spreading.

3.3.3.2 Mechanical Anchor

Mechanical anchor shall be a V-type-wheel land packer; a scalloped-disk land packer designed to force mulch into the soil surface; or other suitable equipment.

3.3.3.3 Asphalt Adhesive Tackifier

Asphalt adhesive tackifier shall be sprayed at a rate between . Sunlight shall not be completely excluded from penetrating to the ground surface.

3.3.3.4 Non-Asphaltic Tackifier

Hydrophilic colloid shall be applied at the rate recommended by the manufacturer, using hydraulic equipment suitable for thoroughly mixing with water. A uniform mixture shall be applied over the area.

3.3.3.5 Asphalt Adhesive Coated Mulch

Hay or straw mulch may be spread simultaneously with asphalt adhesive applied at a rate between , using power mulch equipment which shall be equipped with suitable asphalt pump and nozzle. The adhesive-coated mulch shall be applied evenly over the surface. Sunlight shall not be completely excluded from penetrating to the ground surface.

3.3.3.6 Wood Cellulose Fiber, Paper Fiber, and Recycled Paper

Wood cellulose fiber, paper fiber, or recycled paper shall be applied as part of the hydroseeding operation. The mulch shall be mixed and applied in accordance with the manufacturer's recommendations.

3.3.4 Watering Seed

Watering shall be started immediately after completing the seeding of an area. Water shall be applied to supplement rainfall at a rate sufficient to ensure moist soil conditions to a minimum (1 inch) depth. Run-off and puddling shall be prevented. Watering trucks shall not be driven over turf areas, unless otherwise directed. Watering of other adjacent areas or plant material shall be prevented.

3.4 SURFACE EROSION CONTROL

3.4.1 Surface Erosion Control Material

Where indicated or as directed, surface erosion control material shall be installed in accordance with manufacturer's instructions. Placement of the material shall be accomplished without damage to installed material or without deviation to finished grade.

3.4.2 Not Used

3.4.2.1 Soil Amendments

When soil amendments have not been applied to the area, the quantity of 1/2 of the required soil amendments shall be applied and the area tilled in accordance with paragraph SITE PREPARATION. The area shall be watered in accordance with paragraph Watering Seed.

3.4.2.2 Remaining Soil Amendments

The remaining soil amendments shall be applied in accordance with the

paragraph Tillage when the surface is prepared for installing seed.

3.5 QUANTITY CHECK

For materials provided in bags, the empty bags shall be retained for recording the amount used. For materials provided in bulk, the weight certificates shall be retained as a record of the amount used. The amount of material used shall be compared with the total area covered to determine the rate of application used. Differences between the quantity applied and the quantity specified shall be adjusted as directed.

3.6 APPLICATION OF PESTICIDE

When application of a pesticide becomes necessary to remove a pest or disease, a pesticide treatment plan shall be submitted and coordinated with the installation pest management program.

3.6.1 Technical Representative

The certified installation pest management coordinator shall be the technical representative, and shall be present at all meetings concerning treatment measures for pest or disease control. They may be present during treatment application.

3.6.2 Application

A state certified applicator shall apply required pesticides in accordance with EPA label restrictions and recommendations. Clothing and personal protective equipment shall be used as specified on the pesticide label. A closed system is recommended as it prevents the pesticide from coming into contact with the applicator or other persons. Water for formulating shall only come from designated locations. Filling hoses shall be fitted with a backflow preventer meeting local plumbing codes or standards. Overflow shall be prevented during the filling operation. Prior to each day of use, the equipment used for applying pesticide shall be inspected for leaks, clogging, wear, or damage. Any repairs are to be performed immediately. A pesticide plan shall be submitted.

3.7 RESTORATION AND CLEAN UP

3.7.1 Restoration

Existing turf areas, pavements, and facilities that have been damaged from the seeding operation shall be restored to original condition at Contractor's expense.

3.7.2 Clean Up

Excess and waste material shall be removed from the seeded areas and shall be disposed offsite. Adjacent paved areas shall be cleaned.

3.8 PROTECTION OF INSTALLED AREAS

Immediately upon completion of the seeding operation in an area, the area shall be protected against traffic or other use by erecting barricades and providing signage as required, or as directed.

3.9 SEED ESTABLISHMENT PERIOD

3.9.1 Commencement

The seed establishment period to obtain a healthy stand of grass plants shall begin on the first day of work under this contract and shall end 3 months after the last day of the seeding operation. Written calendar time period shall be furnished for the seed establishment period. When there is more than 1 seed establishment period, the boundaries of the seeded area covered for each period shall be described. The seed establishment period shall be coordinated with Sections 02922 SODDING,and 02930 EXTERIOR PLANTING. The seed establishment period shall be modified for inclement weather, shut down periods, or for separate completion dates of areas.

3.9.2 Satisfactory Stand of Grass Plants

Grass plants shall be evaluated for species and health when the grass plants are a minimum high.

3.9.2.1 Lawn Area

A satisfactory stand of grass plants from the seeding operation for a lawn area shall be a minimum 20 grass plants per square foot. Bare spots shall be a maximum square. The total bare spots shall be a maximum 2 percent of the total seeded area.

3.9.2.2 Field Area

A satisfactory stand of grass plants from the seeding operation for a field area shall be a minimum 10 grass plants per square foot. The total bare spots shall not exceed 2 percent of the total seeded area.

3.9.3 Maintenance During Establishment Period

Maintenance of the seeded areas shall include eradicating weeds, insects and diseases; protecting embankments and ditches from surface erosion; maintaining erosion control materials and mulch; protecting installed areas from traffic; mowing; watering; and post-fertilization.

3.9.3.1 Mowing

a. Lawn Areas: Lawn areas shall be mowed to a minimum 3 inch height when the turf is a maximum 4 inches high. Clippings shall be removed when the amount cut prevents sunlight from reaching the ground surface.

b. Field Areas: Field areas shall be mowed once during the season to a minimum height. Clippings shall be removed when the amount cut prevents sunlight from reaching the ground surface.

3.9.3.2 Post-Fertilization

The fertilizer shall be applied as recommended by the soil test. A maximum of actual available nitrogen shall be provided to the grass plants. The application shall be timed prior to the advent of winter dormancy and shall be made without burning the installed grass plants.

3.9.3.3 Pesticide Treatment

Treatment for disease or pest shall be in accordance with paragraph APPLICATION OF PESTICIDE.

3.9.3.4 Repair or Reinstall

Unsatisfactory stand of grass plants and mulch shall be repaired or reinstalled, and eroded areas shall be repaired in accordance with paragraph SITE PREPARATION.

3.9.3.5 Maintenance Record

A record of each site visit shall be furnished, describing the maintenance work performed; areas repaired or reinstalled; and diagnosis for unsatisfactory stand of grass plants.

-- End of Section --

SECTION TABLE OF CONTENTS

DIVISION 02 - SITE WORK

SECTION 02922

SODDING

06/98

PART 1 GENERAL

1.1 REFERENCES
1.2 SUBMITTALS
1.3 SOURCE INSPECTION
1.4 DELIVERY, INSPECTION, STORAGE, AND HANDLING
1.4.1 Delivery
1.4.1.1 Sod
1.4.1.2 Delivered Topsoil
1.4.1.3 Soil Amendments
1.4.1.4 Pesticides
1.4.2 Inspection
1.4.3 Storage
1.4.3.1 Sod
1.4.3.2 Other Material Storage
1.4.4 Handling
1.4.5 Time Limitation

PART 2 PRODUCTS

2.1 SOD
2.1.1 Sod Classification
2.1.2 Grass Species
2.1.3 Quality
2.1.4 Thickness
2.1.5 Anchors
2.1.6 Substitutions
2.2 TOPSOIL
2.3 SOIL AMENDMENTS
2.3.1 pH Adjuster
2.3.1.1 Limestone
2.3.1.2 Hydrated Lime
2.3.1.3 Burnt Lime
2.3.2 Fertilizer
2.3.3 Nitrogen Carrier Fertilizer
2.3.4 Organic Material
2.3.4.1 Bonemeal
2.3.4.2 Rotted Manure
2.3.4.3 Decomposed Wood Derivatives
2.3.4.4 Recycled Compost
2.3.4.5 Worm Castings
2.3.5 Soil Conditioner
2.3.5.1 Sand
2.3.5.2 Super Absorbent Polymers
2.3.5.3 Calcined Clay
2.3.5.4 Gypsum

2.3.5.5 Expanded Shale, Clay, or Slate (ESCS)
2.4 WATER
2.5 PESTICIDE

PART 3 EXECUTION

3.1 INSTALLING SOD TIME AND CONDITIONS
3.1.1 Sodding Time
3.1.2 Sodding Conditions
3.1.3 Equipment Calibration
3.1.4 Topsoil Requirements and Testing
3.2 SITE PREPARATION
3.2.1 Finished Grade and Topsoil
3.2.2 Application of Soil Amendments
3.2.2.1 Applying pH Adjuster
3.2.2.2 Applying Fertilizer
3.2.2.3 Applying Soil Conditioner
3.2.2.4 Applying Super Absorbent Polymers
3.2.3 Tillage
3.2.4 Prepared Surface
3.2.4.1 Preparation
3.2.4.2 Protection
3.3 INSTALLATION
3.3.1 Installing Sod
3.3.2 Finishing
3.3.3 Rolling
3.3.4 Watering Sod
3.4 TEMPORARY SEEDING
3.5 QUANTITY CHECK
3.6 APPLICATION OF PESTICIDE
3.6.1 Technical Representative
3.6.2 Application
3.7 RESTORATION AND CLEAN UP
3.7.1 Restoration
3.7.2 Clean Up
3.8 PROTECTION OF INSTALLED AREAS
3.9 SOD ESTABLISHMENT PERIOD
3.9.1 Commencement
3.9.2 Satisfactory Stand of Grass Plants
3.9.3 Maintenance During Establishment Period
3.9.3.1 Mowing
3.9.3.2 Post-Fertilization
3.9.3.3 Pesticide Treatment
3.9.3.4 Repair
3.9.3.5 Maintenance Record

-- End of Section Table of Contents --

SECTION 02922

SODDING
06/98

PART 1 GENERAL

1.1 REFERENCES

AMERICAN SOCIETY FOR TESTING AND MATERIALS (ASTM)

ASTM C 602	(1995a) Agricultural Liming Materials
ASTM D 4972	(1995a) pH of Soils
ASTM D 5268	(1992; R 1996) Topsoil Used for Landscaping Purposes
ASTM D 5883	(1996) Standard Guide for Use of Rotary Kiln Produced Expanded Shale, Clay or Slate (ESCS) as a Mineral Amendment in Topsoil Used for Landscaping and Related Purposes

1.2 SUBMITTALS

Government approval is required for submittals with a "GA" designation; submittals having an "FIO" designation are for information only. The following shall be submitted in accordance with Section 01330 SUBMITTAL PROCEDURES:

SD-08 Statements

Finished Grade and Topsoil; FIO.

Finished grade status.

Topsoil; FIO.

Availability of topsoil from the stripping and stock piling operation.

Soil Test; GA.

Certified reports of inspections and laboratory tests, prepared by an independent testing agency, including analysis and interpretation of test results. Each report shall be properly identified. Test methods used and compliance with recognized test standards shall be described.

SD-13 Certificates

Sod; FIO. Topsoil; FIO. pH Adjuster; FIO. Fertilizer; FIO. Organic Material; FIO. Soil Conditioner; FIO. Pesticide; FIO.

Prior to the delivery of materials, certificates of compliance attesting that materials meet the specified requirements. Certified copies of the

material certificates shall include the following:

a. Sod. Classification, botanical name, common name, mixture percentage of species, percent purity, quality grade, field location and state certification.

b. Topsoil. Particle size, pH, organic matter content, textural class, soluble salts, chemical and mechanical analyses.

c. pH Adjuster. Calcium carbonate equivalent and sieve analysis.

d. Fertilizer. Chemical analysis and composition percent.

e. Organic Material: Composition and source.

f. Soil Conditioner: Composition and source.

g. Pesticide. EPA registration number and registered uses.

SD-18 Records

Quantity Check; FIO.

Bag count or bulk weight measurements of material used compared with area covered to determine the application rate and quantity installed. The quantity of sod used shall be compared against the total area installed.

Sod Establishment Period; FIO.

Calendar time period for the sod establishment period. When there is more than one sod establishment period, the boundaries of the sodded area covered for each period shall be described.

Maintenance Record; FIO.

Maintenance work performed, area repaired or reinstalled, diagnosis for unsatisfactory stand of grass plants.

Application of Pesticide; FIO.

Pesticide treatment plan with sequence of treatment work with dates and times. The pesticide trade name, EPA registration number, chemical composition, formulation, concentration of original and diluted material, application rate of active ingredients, method of application, area treated, amount applied; and the name and state license number of the state certified applicator shall be included.

1.3 SOURCE INSPECTION

The sources of sod material and delivered topsoil shall be subject to inspection.

1.4 DELIVERY, INSPECTION, STORAGE, AND HANDLING

1.4.1 Delivery

A delivery schedule shall be provided at least 10 calendar days prior to the first day of delivery.

1.4.1.1 Sod

Sod shall be protected during delivery to prevent desiccation, internal heat buildup, or contamination.

1.4.1.2 Delivered Topsoil

Prior to the delivery of any topsoil, its availability shall be verified in paragraph TOPSOIL. A soil test shall be provided for topsoil delivered to the site.

1.4.1.3 Soil Amendments

Soil amendments shall be delivered to the site in the original, unopened containers bearing the manufacturer's chemical analysis. In lieu of containers, soil amendments may be furnished in bulk. A chemical analysis shall be provided for bulk deliveries.

1.4.1.4 Pesticides

Pesticide material shall be delivered to the site in the original, unopened containers bearing legible labels indicating the EPA registration number and the manufacturer's registered uses.

1.4.2 Inspection

Sod shall be inspected upon arrival at the job site for conformity to species. Sod shall be checked for visible broadleaf weeds, and a visible consistency with no obvious patches of foreign grasses that exceed 2 percent of the canopy. Sod that is heating up, dry, moldy, yellow, irregularly shaped, torn, or of uneven thickness shall be rejected. Other materials shall be inspected for compliance with specified requirements. Open soil amendment containers or wet soil amendments; topsoil that contains slag, cinders, stones, lumps of soil, sticks, roots, trash or other material over a minimum 1-1/2 inch diameter; and topsoil that contains viable plants and plant parts, shall be rejected. Unacceptable materials shall be removed from the job site.

1.4.3 Storage

1.4.3.1 Sod

Sod shall be stored in designated areas and kept in a moist condition by watering with a fine mist, and covered with moist burlap, straw, or other covering. Covering shall allow air to circulate, preventing internal heat from building up. Sod shall be protected from exposure to wind and direct sunlight until installed.

1.4.3.2 Other Material Storage

Materials shall be stored in designated areas. Lime and fertilizer shall be stored in cool, dry locations, away from contaminants. Chemical treatment material shall be stored according to manufacturer's instructions and not with sod operation materials.

1.4.4 Handling

Sod shall not be damaged during handling. Except for bulk deliveries, materials shall not be dropped or dumped from vehicles.

1.4.5 Time Limitation

Time limitation between harvesting and installing sod shall be a maximum 36 hours.

PART 2 PRODUCTS

2.1 SOD

2.1.1 Sod Classification

State-certified sod shall be provided as classified by applicable state laws. Sod section shall be sized to permit rolling and lifting without breaking.

2.1.2 Grass Species

Grass species shall be proportioned as follows:

Botanical Name	Common Name	Mixture Percent
Poa Pratensis	Kentucky Bluegrass	100%

2.1.3 Quality

Sod shall be relatively free of thatch, diseases, nematodes, soil-borne insects, weeds or undesirable plants, stones larger than 1 inch in diameter, woody plant roots, and other materials detrimental to a healthy stand of grass plants. Broadleaf weeds and patches of foreign grasses shall be a maximum 2 percent of the sod section.

2.1.4 Thickness

Sod shall be machine cut to a minimum 1-3/8 inch thickness. Measurement for thickness shall exclude top growth and thatch.

2.1.5 Anchors

Sod anchors shall be as recommended by the sod supplier.

2.1.6 Substitutions

Substitutions will not be allowed without written request and approval from the Contracting Officer.

2.2 TOPSOIL

Topsoil shall be as defined in ASTM D 5268. When available, the topsoil shall be the existing surface soil stripped and stockpiled onsite in accordance with Section 02300 EARTHWORK. When additional topsoil is required beyond the available topsoil from stripping operation, topsoil shall be delivered and amended as recommended by the soil test for the sod species specified. Topsoil shall be free from slag, cinders, stones, lumps of soil, sticks, roots, trash, or other material over a maximum 1-1/2 inch diameter. Topsoil shall be free from viable plants and plant parts.

2.3 SOIL AMENDMENTS

Soil amendments shall consist of pH adjuster, fertilizer, organic material, and soil conditioners meeting the following requirements. Vermiculite shall not be used.

2.3.1 pH Adjuster

The pH adjuster shall be an agricultural liming material in accordance with ASTM C 602. These materials may be burnt lime, hydrated lime, ground limestone, or shells. The pH adjuster shall be used to create a favorable soil pH for the plant material specified.

2.3.1.1 Limestone

Limestone material shall contain a minimum calcium carbonate equivalent of 80 percent. Gradation: A minimum 95 percent shall pass through a No. 8 sieve and a minimum 55 percent shall pass through a No. 60 sieve. To raise soil pH, ground limestone shall be used.

2.3.1.2 Hydrated Lime

Hydrated lime shall contain a minimum calcium carbonate equivalent of 110 percent. Gradation: A minimum 100 percent shall pass through a No. 8 sieve and a minimum 97 percent shall pass through a No. 60 sieve.

2.3.1.3 Burnt Lime

Burnt lime shall contain a minimum calcium carbonate equivalent of 140 percent. Gradation: A minimum 95 percent shall pass through a No. 8 sieve and a minimum 35 percent shall pass through a No. 60 sieve.

2.3.2 Fertilizer

It shall be as recommended by the soil test. Fertilizer shall be controlled release commercial grade, free flowing, uniform in composition, and consist of a nitrogen-phosphorus-potassium ratio. The fertilizer shall be derived from sulphur coated urea, urea formaldehyde, plastic or polymer coated pills, or isobutylenediurea (IBDU). Fertilizer shall be balanced with the inclusion of trace minerals and micro-nutrients.

2.3.3 Nitrogen Carrier Fertilizer

It shall be as recommended by the soil test Nitrogen carrier fertilizer shall be commercial grade, free flowing, and uniform in composition. The fertilizer may be a liquid nitrogen solution.

2.3.4 Organic Material

Organic material shall consist of either bonemeal, rotted manure, decomposed wood derivatives, recycled compost, or worm castings.

2.3.4.1 Bonemeal

Bonemeal shall be finely ground, steamed bone product containing from 2 to 4 percent nitrogen and 16 to 40 percent phosphoric acid.

2.3.4.2 Rotted Manure

Rotted manure shall be unleached horse, chicken or cattle manure containing

a maximum 25 percent by volume straw, sawdust, or other bedding materials. Manure shall contain no chemicals or ingredients harmful to plants. The manure shall be heat treated to kill weed seeds and be free of stones, sticks, and soil.

2.3.4.3 Decomposed Wood Derivatives

Decomposed wood derivatives shall be ground bark, sawdust, yard trimmings, or other wood waste material free of stones, sticks, soil, and toxic substances harmful to plants, fully composted or stabilized with nitrogen.

2.3.4.4 Recycled Compost

Compost shall be a well decomposed, stable, weed free organic matter source. Compost shall be derived from food; agricultural or industrial residuals; biosolids (treated sewage sludge); yard trimmings; or source-separated or mixed solid waste. The compost shall possess no objectionable odors and shall not resemble the raw material from which it was derived. The material shall not contain substances toxic to plants. Gradation: The compost material shall pass through a 3/8 inch screen, possess a pH of 5.5 to 8.0, and have a moisture content between 35-55 percent by weight. The material shall not contain more than 1 percent or less by weight of man-made foreign matter. Compost shall be cleaned of plastic materials larger than 2 inches in length.

2.3.4.5 Worm Castings

Worm castings shall be screened from worms and food source, and shall be commercially packaged.

2.3.5 Soil Conditioner

Soil conditioner shall be sand, super absorbent polymers, calcined clay, or gypsum for use singly or in combination to meet the requirements for topsoil.

2.3.5.1 Sand

Sand shall be clean and free of toxic materials. Gradation: A minimum 95 percent by weight shall pass a No. 10 sieve and a minimum 10 percent by weight shall pass a No. 16 sieve. Greensand shall be balanced with the inclusion of trace minerals and nutrients.

2.3.5.2 Super Absorbent Polymers

To improve water retention in soils, super absorbent polymers shall be sized and applied according to the manufacturer's recommendations. Polymers shall be added as a soil amendment and be cross-linked polyacrylamide with an absorption capacity of 250-400 times its weight.

2.3.5.3 Calcined Clay

Calcined clay shall be granular particles produced from montmorillonite clay calcined to minimum temperature of 1200 degrees F. Gradation: A minimum 90 percent passing No. 8 sieve; a minimum 99 percent shall be retained on a No. 60 sieve; and a maximum 2 percent shall pass a No. 100 sieve. Bulk density: A maximum 40 pounds per cubic foot.

2.3.5.4 Gypsum

Gypsum shall be commercially packaged, free flowing, and a minimum 95 percent calcium sulfate by volume.

2.3.5.5 Expanded Shale, Clay, or Slate (ESCS)

Rotary kiln produced ESCS material shall be in conformance with ASTM D 5883.

2.4 WATER

Water shall be the responsibility of the Contractor unless otherwise noted. Water shall not contain elements toxic to plant life.

2.5 PESTICIDE

Pesticide shall be insecticide, herbicide, fungicide, nematocide, rodenticide or miticide. For the purpose of this specification, a soil fumigant shall have the same requirements as a pesticide. The pesticide material shall be EPA registered and approved.

PART 3 EXECUTION

3.1 INSTALLING SOD TIME AND CONDITIONS

3.1.1 Sodding Time

Sod shall be installed from April 15th to May 30th for spring establishment; from August 15th to November 1st for fall establishment.

3.1.2 Sodding Conditions

Sodding operations shall be performed only during periods when beneficial results can be obtained. When drought, excessive moisture or other unsatisfactory conditions prevail, the work shall be stopped when directed. When special conditions warrant a variance to the sodding operations, proposed alternate times shall be submitted for approval.

3.1.3 Equipment Calibration

Immediately prior to the commencement of sodding operations, calibration tests shall be conducted on the equipment to be used. These tests shall confirm that the equipment is operating within the manufacturer's specifications and will meet the specified criteria. The equipment shall be calibrated a minimum of once every day during the operation. Provide calibration test results within one week of testing.

3.1.4 Topsoil Requirements and Testing

Delivered select topsoil borrow, existing soil in smooth graded areas, and stockpiled topsoil shall be tested in accordance with ASTM D 5268 and ASTM D 4972 for determining the particle size, pH, organic matter content, and textural class. All topsoil shall meet the following requirements:

Material Passing 2.00 mm Sieve	Min.	Max.
Clay	5%	n/a
Silt	10%	70%
Sand and Gravel	20%	70%
Organic Matter	3%	20%
pH	6.1	7.5

3.2 SITE PREPARATION

3.2.1 Finished Grade and Topsoil

Prior to the commencement of the sodding operation, the Contractor shall verify that finished grades are as indicated on drawings; the placing of topsoil, smooth grading, and compaction requirements have been completed in accordance with Section 02300 EARTHWORK.

3.2.2 Application of Soil Amendments

3.2.2.1 Applying pH Adjuster

The pH adjuster shall be applied at the rate recommended by the soil test. The pH adjuster shall be incorporated into the soil to a maximum 4 inch depth or may be incorporated as part of the tillage operation.

3.2.2.2 Applying Fertilizer

The fertilizer shall be applied at the rate recommended by the soil test. Fertilizer shall be incorporated into the soil to a maximum 4 inch depth or may be incorporated as part of the tillage or hydroseeding operation.

3.2.2.3 Applying Soil Conditioner

The soil conditioner shall be as recommended by the soil test. The soil conditioner shall be spread uniformly over the soil a minimum 1 inch depth and thoroughly incorporated by tillage into the soil to a maximum 4 inches depth.

3.2.2.4 Applying Super Absorbent Polymers

Polymers shall be spread uniformly over the soil as recommended by the manufacturer and thoroughly incorporated by tillage into the soil to a maximum 2 inches deep prior to placement of sod.

3.2.3 Tillage

Soil on slopes up to a maximum 3-horizontal-to-1-vertical shall be tilled to a minimum 4 inches deep. On slopes between 3-horizontal-to-1-vertical and 1-horizontal-to-1 vertical, the soil shall be tilled to a minimum 2 inches deep by scarifying with heavy rakes, or other method. Rototillers shall be used where soil conditions and length of slope permit. On slopes 1-horizontal-to-1 vertical and steeper, no tillage is required. Drainage patterns shall be maintained as indicated on drawings. Areas compacted by construction operations shall be completely pulverized by tillage. Soil used for repair of surface erosion or grade deficiencies shall conform to topsoil requirements. The pH adjuster, fertilizer, and soil conditioner may be applied during this procedure.

3.2.4 Prepared Surface

3.2.4.1 Preparation

The prepared surface shall be a maximum 1 inch below the adjoining grade of any surfaced area. New surfaces shall be blended to existing areas. The prepared surface shall be rolled and completed with a light raking to remove from the surface debris and stones over a minimum 5/8 inch in any

dimension.

3.2.4.2 Protection

Areas within the prepared surface shall be protected from compaction or damage by vehicular or pedestrian traffic and surface erosion.

3.3 INSTALLATION

Prior to installing sod, any previously prepared surface compacted or damaged shall be reworked to meet the requirements of paragraph SITE PREPARATION. Areas shall be sodded as indicated. Adequate soil moisture shall be ensured prior to sodding by spraying water on the area to be sodded and wetting the soil to a maximum 1 inch depth.

3.3.1 Installing Sod

Rows of sod sections shall be placed parallel to and tightly against each other. Joints shall be staggered laterally. The sod sections shall not be stretched or overlapped. All joints shall be butted tight. Voids and air drying of roots shall be prevented. Sod sections shall be laid across the slope on long slopes. Sod sections shall be laid at right angles to the flow of water in ditches. Sod sections shall be anchored on slopes steeper than 3-horizontal-to-1-vertical. Anchoring may be required when surface weight or pressure upon placed sod sections is anticipated to cause lateral movement. Sod anchors shall be placed a minimum 2 feet on center with a minimum 2 anchors per sod section.

3.3.2 Finishing

Displacement of the sod shall be prevented by tamping or rolling the sod in place and knitting the sod to the soil. Air pockets shall be eliminated and a true and even surface shall be provided. Frayed edges shall be trimmed, and holes or missing corners shall be patched with sod.

3.3.3 Rolling

The entire area shall be firmed with a roller not exceeding 90 pounds per foot roller width. Slopes over a maximum 3-horizontal-to-1 vertical shall not be rolled.

3.3.4 Watering Sod

Watering shall be started immediately after completing each day of installing sod. Water shall be applied at least 3 times per week to supplement rainfall, at a rate sufficient to ensure moist soil conditions to a minimum depth of 1 inch. Run-off, puddling, and wilting shall be prevented. Unless otherwise directed, watering trucks shall not be driven over turf areas. Watering of other adjacent areas or plant material shall be prevented.

3.4 TEMPORARY SEEDING

The application rate shall be a mixture of Alfalfa @ (3 to 4 pounds per acre). Regreen @ (17-20 lbs per acre). The above seed mix shall be used where indicated on drawings, and if a contract delay prevents the sodding operation and quck cover is required to prevent surface erosion., perennial Rye @ (10 lbs/acre).

3.5 QUANTITY CHECK

For materials provided in bags, the empty bags shall be retained for recording the amount used. For materials provided in bulk, the weight certificates shall be retained as a record of the amount used. The amount of the material used shall be compared with the total area covered to determine the rate of application. The quantity of sod used shall be compared against the total area established with sod. Differences between the quantity applied and the quantity specified shall be adjusted as directed.

3.6 APPLICATION OF PESTICIDE

When application of a pesticide becomes necessary to remove a pest or disease, a pesticide treatment plan shall be submitted and coordinated with the installation pest management program.

3.6.1 Technical Representative

The certified installation pest management coordinator shall be the technical representative, and shall be present at all meetings concerning treatment measures for pest or disease control. They may be present during treatment application.

3.6.2 Application

A state certified applicator shall apply required pesticides in accordance with EPA label restrictions and recommendations. Clothing and personal protective equipment shall be used as specified on the pesticide label. A closed system is recommended as it prevents the pesticide from coming into contact with the applicator or other persons. Water for formulating shall only come from designated locations. Filling hoses shall be fitted with a backflow preventer meeting local plumbing codes or standards. Overflow shall be prevented during the filling operation. Prior to each day of use, the equipment used for applying pesticide shall be inspected for leaks, clogging, wear, or damage. Any repairs are to be performed immediately.

3.7 RESTORATION AND CLEAN UP

3.7.1 Restoration

Existing turf areas, pavements, and facilities that have been damaged from the sodding operation shall be restored to original condition at Contractor's expense.

3.7.2 Clean Up

Excess and waste material shall be removed from the sodded areas and shall be disposed offsite. Adjacent paved areas shall be cleaned.

3.8 PROTECTION OF INSTALLED AREAS

Immediately upon completion of the sodding operation in an area, the area shall be protected against traffic or other use by erecting barricades and providing signage as required, or as directed. Signage shall be in accordance with Section 10430 EXTERIOR SIGNAGE.

3.9 SOD ESTABLISHMENT PERIOD

3.9.1 Commencement

The sod establishment period to obtain a healthy stand of grass plants shall begin on the first day of work under this contract and shall end 3 months after the last day of sodding operation. Written calendar time period shall be furnished for the sod establishment period. When there is more than 1 sod establishment period, the boundaries of the sodded area covered for each period shall be described. The sod establishment period should be coordinated with Section 02930 EXTERIOR PLANTING. The sod establishment period shall be modified for inclement weather, shut down periods, or for separate completion dates of areas.

3.9.2 Satisfactory Stand of Grass Plants

Grass plants shall be evaluated for species and health. A satisfactory stand of grass plants from the sodding operation shall be living sod uniform in color and leaf texture. Bare spots shall be a maximum 2 inch square. Joints between sod pieces shall be tight and free from weeds and other undesirable growth.

3.9.3 Maintenance During Establishment Period

Maintenance of the sodded areas shall include eradicating weeds, insects and diseases; protecting embankments and ditches from surface erosion; maintaining erosion control materials and mulch; protecting installed areas from traffic; mowing; watering; and post-fertilization.

3.9.3.1 Mowing

Sodded areas shall be mowed to a minimum 3 inch height when the turf is a maximum 4 inch height. Clippings shall be removed when the amount cut prevents sunlight from reaching the ground surface.

3.9.3.2 Post-Fertilization

The fertilizer shall be applied as recommended by the soil test. A maximum 1/2 pound per 1000 square feet of actual available nitrogen shall be provided to the grass plants. The application shall be timed prior to the advent of winter dormancy and shall be made without burning the installed grass plants.

3.9.3.3 Pesticide Treatment

Treatment for disease or pest shall be in accordance with paragraph APPLICATION OF PESTICIDE.

3.9.3.4 Repair

Unsatisfactory stand of grass plants shall be repaired or reinstalled, and eroded areas shall be repaired in accordance with paragraph SITE PREPARATION.

3.9.3.5 Maintenance Record

A record of each site visit shall be furnished which describes the maintenance work performed; areas repaired or reinstalled; and diagnosis for unsatisfactory stand of grass plants.

-- End of Section --

SECTION TABLE OF CONTENTS

DIVISION 02 - SITE WORK

SECTION 02930

EXTERIOR PLANTING

06/98

PART 1 GENERAL

1.1 REFERENCES
1.2 SUBMITTALS
1.3 SOURCE INSPECTIONS
1.4 DELIVERY, INSPECTION, STORAGE, AND HANDLING
1.4.1 Delivery
1.4.1.1 Plant Material Identification
1.4.1.2 Protection During Delivery
1.4.1.3 Delivered Topsoil
1.4.1.4 Soil Amendments
1.4.1.5 Pesticide Material
1.4.2 Inspection
1.4.3 Storage
1.4.3.1 Plant Material Storage
1.4.3.2 Other Material Storage
1.4.4 Handling
1.4.5 Time Limitation
1.5 WARRANTY

PART 2 PRODUCTS

2.1 PLANT MATERIAL
2.1.1 Plant Material Classification
2.1.2 Plant Schedule
2.1.3 Substitutions
2.1.4 Quality
2.1.5 Growing Conditions
2.1.6 Method of Shipment to Maintain Health of Root System
2.1.6.1 Balled and Burlapped (BB) Plant Material
2.1.6.2 Balled and Potted (Pot) Plant Material
2.1.6.3 Not Used
2.1.6.4 Not Used
2.1.6.5 Container-Grown (C) Plant Material
2.1.7 Growth of Trunk and Crown
2.1.7.1 Deciduous Trees
2.1.7.2 Not Used
2.1.7.3 Deciduous Shrubs
2.1.7.4 Coniferous Evergreen Plant Material
2.1.7.5 Not Used
2.1.7.6 Ground Cover and Vine Plant Material
2.1.8 Plant Material Size
2.1.9 Plant Material Measurement
2.2 TOPSOIL
2.2.1 Planting Soil
2.3 SOIL AMENDMENTS

2.3.1 pH Adjuster
2.3.1.1 Limestone
2.3.1.2 Hydrated Lime
2.3.1.3 Burnt Lime
2.3.2 Fertilizer
2.3.3 Organic Material
2.3.3.1 Bonemeal
2.3.3.2 Rotted Manure
2.3.3.3 Decomposed Wood Derivatives
2.3.3.4 Recycled Compost
2.3.3.5 Worm Castings
2.3.4 Soil Conditioner
2.3.4.1 Sand
2.3.4.2 Super Absorbent Polymers
2.3.4.3 Calcined Clay
2.3.4.4 Gypsum
2.3.4.5 Expanded Shale, Clay, or Slate (ESCS)
2.4 MULCH
2.4.1 Inorganic Mulch
2.4.2 Organic Mulch
2.5 GEOTEXTILE
2.6 WOOD STAKING MATERIAL
2.6.1 Bracing Stake
2.6.2 Wood Ground Stakes
2.6.3 Deadmen
2.7 METAL STAKING AND GUYING MATERIAL
2.7.1 Bracing Stakes
2.7.2 Metal Ground Stakes
2.7.3 Earth Anchor
2.7.4 Guying Material
2.7.5 Turnbuckle
2.8 Not Used
2.9 RUBBER GUYING MATERIAL
2.10 FLAG
2.11 TREE ROOT BARRIERS
2.12 MYCORRHIZAL FUNGI INOCULUM
2.13 WATER
2.14 PESTICIDE
2.15 LANDSCAPE EDGING

PART 3 EXECUTION

3.1 INSTALLING PLANT MATERIAL TIME AND CONDITIONS
3.1.1 Deciduous Plant Material Time
3.1.2 Evergreen Plant Material Time
3.1.3 Plant Material Conditions
3.1.4 Tests
3.1.4.1 Percolation Test
3.1.4.2 Soil Requirements and Testing
3.2 SITE PREPARATION
3.2.1 Finished Grade, Topsoil and Underground Utilities
3.2.2 Layout
3.2.3 Protecting Existing Vegetation
3.3 EXCAVATION
3.3.1 Obstructions Below Ground
3.3.2 Turf Removal
3.3.3 Plant Pits
3.4 INSTALLATION
3.4.1 Setting Plant Material

3.4.1.1 Bare-Root Plant Material
3.4.2 Tree Root Barrier
3.4.3 Backfill Soil Mixture
3.4.4 Adding Mycorrhizal Fungi Inoculum
3.4.5 Backfill Procedure
3.4.5.1 Balled and Burlapped, and Balled and Platformed Plant Material
3.4.5.2 Not Used
3.4.5.3 Container-Grown and Balled and Potted Plant Material
3.4.5.4 Earth Berm
3.4.6 Plant Bed
3.4.7 Watering
3.4.8 Staking and Guying
3.4.8.1 One Bracing Stake
3.4.8.2 Two Bracing Stakes
3.4.8.3 Three Ground Stakes
3.4.9 Not Used
3.4.10 Flags
3.5 FINISHING
3.5.1 Plant Material
3.5.2 Placing Geotextile
3.5.3 Placing Mulch
3.5.4 Pruning
3.6 MAINTENANCE DURING PLANTING OPERATION
3.7 APPLICATION OF PESTICIDE
3.7.1 Technical Representative
3.7.2 Application
3.8 RESTORATION AND CLEAN UP
3.8.1 Restoration
3.8.2 Clean Up
3.9 PLANT ESTABLISHMENT PERIOD
3.9.1 Commencement
3.9.2 Maintenance During Establishment Period
3.9.2.1 Watering Plant Material
3.9.2.2 Weeding
3.9.2.3 Pesticide Treatment
3.9.2.4 Post-Fertilization
3.9.2.5 Plant Pit Settling
3.9.2.6 Maintenance Record
3.9.3 Unhealthy Plant Material
3.9.4 Replacement Plant Material
3.9.5 Maintenance Instructions

-- End of Section Table of Contents --

SECTION 02930

EXTERIOR PLANTING
06/98

PART 1 GENERAL

1.1 REFERENCES

The publications listed below form a part of this specification to the extent referenced. The publications are referred to in the text by basic designation only.

AMERICAN NURSERY AND LANDSCAPE ASSOCIATION (ANLA)

ANLA ANSI/ANLA Z60.1	(1996) American Standard for Nursery Stock

AMERICAN NATIONAL STANDARDS INSTITUTE (ANSI)

ANSI A300	(1995) Tree Care Operations - Trees, Shrubs and other Woody Plant Maintenance

AMERICAN SOCIETY FOR TESTING AND MATERIALS (ASTM)

ASTM C 602	(1995a) Agricultural Liming Materials
ASTM D 4972	(1995a) pH of Soils
ASTM D 5034	(1995) Breaking Strength and Elongation of Textile Fabrics (Grab Test)
ASTM D 5035	(1995) Breaking Strength and Elongation of Textile Fabrics (Grab Test)
ASTM D 5268	(1992; R1996) Topsoil Used for Landscaping Purposes
ASTM D 5883	(1996) Standard Guide for Use of Rotary Kiln Produced Expanded Shale, Clay or Slate (ESCS) as a Mineral Amendment in Topsoil Used for Landscaping and Related Purposes

1.2 SUBMITTALS

Government approval is required for submittals with a "GA" designation; submittals having an "FIO" designation are for information only. The following shall be submitted in accordance with Section 01330 SUBMITTAL PROCEDURES:

SD-01 Data

Geotextile; GA. Chemical Treatment Material; FIO.

Manufacturer's literature including physical characteristics, application

and installation instructions for geotextile and chemical treatment material.

SD-07 Schedules

Equipment; FIO.

A listing of equipment to be used for the planting operation.

SD-08 Statements

Delivery; FIO.

Delivery schedule.

Finished Grade, Topsoil and Underground Utilities; FIO.

Finished grade status; location of underground utilities and facilities; and availability of topsoil from the stripping and stock piling operation.

SD-09 Reports

Soil Test; GA. Percolation Test; GA.

Certified reports of inspections and laboratory tests, prepared by an independent testing agency, including analysis and interpretation of test results. Each report shall be properly identified. Test methods used and compliance with recognized test standards shall be described.

SD-13 Certificates

Plant Material; FIO. Topsoil; FIO. pH Adjuster; FIO. Fertilizer; FIO. Organic Material; FIO. Soil Conditioner; FIO. Organic Mulch; FIO. Pesticide; FIO.

Prior to delivery of materials, certificates of compliance attesting that materials meet the specified requirements. Certified copies of the material certificates shall include the following.

a. Plant Material: Classification, botanical name, common name, size, quantity by species, and location where grown.

b. Topsoil: Particle size, pH, organic matter content, textural class, soluble salts, chemical and mechanical analyses.

c. pH Adjuster: Sieve analysis and calcium carbonate equivalent.

d. Fertilizer: Chemical analysis and composition percent.

e. Organic Material: Composition and source.

f. Soil Conditioner: Composition and source.

g. Organic Mulch: Composition, source, and treatment against fungi growth.

h. Pesticide. EPA registration number and registered uses.

SD-18 Records

Plant Establishment Period; FIO.

Calendar time period for the plant establishment period. When there is more than one establishment period, the boundaries of the planted areas covered for each period shall be described.

Maintenance Record; GA.

Maintenance work performed, quantity of plant losses, and replacements; and diagnosis of unhealthy plant material.

Application of Pesticide; FIO.

Pesticide treatment plan with sequence of treatment work with dates and times. The pesticide trade name, EPA registration number, chemical composition, formulation, concentration of original and diluted material, application rate of active ingredients, method of application, area treated, amount applied; and the name and state license number of the state certified applicator shall be included.

SD-19 Operation and Maintenance Manuals

Maintenance Instructions; FIO.

Instruction for year-round care of installed plant material.

1.3 SOURCE INSPECTIONS

The nursery or source of plant material and the source of delivered topsoil shall be subject to inspection.

1.4 DELIVERY, INSPECTION, STORAGE, AND HANDLING

1.4.1 Delivery

A delivery schedule shall be provided at least 10 calendar days prior to the first day of delivery.

1.4.1.1 Plant Material Identification

Plant material shall be identified with attached, durable, waterproof labels and weather-resistant ink, stating the correct botanical plant name and size.

1.4.1.2 Protection During Delivery

Plant material shall be protected during delivery to prevent desiccation and damage to the branches, trunk, root system, or earth ball. Branches shall be protected by tying-in. Exposed branches shall be covered during transport.

1.4.1.3 Delivered Topsoil

Prior to the delivery of any topsoil, the availability of topsoil shall be verified in paragraph TOPSOIL. A soil test shall be provided for delivered topsoil.

1.4.1.4 Soil Amendments

Soil amendments shall be delivered to the site in the original, unopened containers bearing the manufacturer's chemical analysis. In lieu of containers, soil amendments may be furnished in bulk. A chemical analysis shall be provided for bulk deliveries.

1.4.1.5 Pesticide Material

Pesticide material shall be delivered to the site in the original, unopened containers bearing legible labels indicating the Environmental Protection Agency (EPA) registration number and the manufacturer's registered uses.

1.4.2 Inspection

Plant material shall be well shaped, vigorous and healthy with a healthy, well branched root system, free from disease, harmful insects and insect eggs, sun-scald injury, disfigurement or abrasion. Plant material shall be checked for unauthorized substitution and to establish nursery grown status. Plant material showing desiccation, abrasion, sun-scald injury, disfigurement, or unauthorized substitution shall be rejected. The plant material shall exhibit typical form of branch to height ratio; and meet the caliper and height measurements specified. Plant material that measures less than specified, or has been poled, topped off or headed back, shall be rejected. Container-grown plant material shall show new fibrous roots and the root mass shall contain its shape when removed from the container. Plant material with broken or cracked balls; or broken containers shall be rejected. Bare-root plant material that is not dormant or is showing roots were pulled from the ground shall be rejected. Other materials shall be inspected for compliance with paragraph PRODUCTS. Open soil amendment containers or wet soil amendments shall be rejected. Topsoil that contains slag, cinders, stones, lumps of soil, sticks, roots, trash or other material larger than 1-1/2 inch diameter shall be rejected. Topsoil that contains viable plant material and plant parts shall be rejected. Unacceptable material shall be removed from the job site.

1.4.3 Storage

1.4.3.1 Plant Material Storage

Plant material not installed on the day of arrival at the site shall be stored and protected in designated areas. Plant material shall not be stored longer than 30 days. Plant material shall be protected from direct exposure to wind and sun. Bare-root plant material shall be heeled-in. All plant material shall be kept in a moist condition by watering with a fine mist spray until installed.

1.4.3.2 Other Material Storage

Storage of other material shall be in designated areas. Soil amendments shall be stored in dry locations and away from contaminants. Chemical treatment material shall be stored according to manufacturer's instructions and not with planting operation material.

1.4.4 Handling

Plant material shall not be injured in handling. Cracking or breaking the earth ball of balled and burlapped plant material shall be avoided. Plant material shall not be handled by the trunk or stems. Materials shall not be dropped from vehicles.

1.4.5 Time Limitation

Except for container-grown plant material, the time limitation from digging to installing plant material shall be a maximum 90 days. The time limitation between installing the plant material and placing the mulch shall be a maximum 24 hours.

1.5 WARRANTY

Furnished plant material shall have a warranty for plant growth to be in a vigorous growing condition for a minimum 12 month period. A minimum 12 month calendar time period for the warranty of plant growth shall be provided regardless of the contract time period. When plant material is determined to be unhealthy in accordance with paragraph PLANT ESTABLISHMENT PERIOD, it shall be replaced once under this warranty.

PART 2 PRODUCTS

2.1 PLANT MATERIAL

2.1.1 Plant Material Classification

The plant material shall be nursery grown stock conforming to ANLA ANSI/ANLA Z60.1 and shall be the species specified.

2.1.2 Plant Schedule

The plant schedule shall provide botanical names as included in one or more of the publications listed under "Nomenclature" in ANLA ANSI/ANLA Z60.1.

2.1.3 Substitutions

Substitutions will not be permitted without written request and approval from the Contracting Officer.

2.1.4 Quality

Well shaped, well grown, vigorous plant material having healthy and well branched root systems in accordance with ANLA ANSI/ANLA Z60.1 shall be provided. Plant material shall be provided free from disease, harmful insects and insect eggs, sun-scald injury, disfigurement and abrasion. Plant material shall be free of shock or damage to branches, trunk, or root systems, which may occur from the digging and preparation for shipment, method of shipment, or shipment. Plant quality is determined by the growing conditions; method of shipment to maintain health of the root system; and growth of the trunk and crown as follows.

2.1.5 Growing Conditions

Plant material shall be native to or well-suited to the growing conditions of the project site. Plant material shall be grown under climatic conditions similar to those at the project site.

2.1.6 Method of Shipment to Maintain Health of Root System

2.1.6.1 Balled and Burlapped (BB) Plant Material

Ball size and ratio shall be in accordance with ANLA ANSI/ANLA Z60.1. The

ball shall be of a diameter and depth to encompass enough fibrous and feeding root system necessary for the full recovery of the plant. The plant stem or trunk shall be centered in the ball. All roots shall be clean cut at the ball surface. Roots shall not be pulled from the ground. Before shipment the root ball shall be dipped in gels containing mycorrhizal fungi inoculum. The root ball shall be completely wrapped with burlap or other suitable material and securely laced with biodegradable twine.

2.1.6.2 Balled and Potted (Pot) Plant Material

Ball size and ratio shall be in accordance with ANLA ANSI/ANLA Z60.1. The ball shall be of a diameter and depth to encompass enough fibrous and feeding root system necessary for the full recovery of the plant. Removal shall be done by hand digging or mechanical devices. The plant stem or trunk shall be centered in the ball. All roots shall be clean cut at the ball surface. Roots shall not be pulled from the ground. Before shipment the root ball shall be dipped in gels containing mycorrhizal fungi inoculum. Container shall be used to retain the ball unbroken. Container shall be rigid to hold ball shape and protect root mass during shipping.

2.1.6.3 Not Used

2.1.6.4 Not Used

2.1.6.5 Container-Grown (C) Plant Material

Container size shall be in accordance with ANLA ANSI/ANLA Z60.1. Plant material shall be grown in a container over a duration of time for new fibrous roots to have developed and for the root mass to retain its shape and hold together when removed from the container. Container-grown plant material shall be inoculated with mycorrhizal fungi during germination in the nursery. Before shipment the root system shall be dipped in gels containing mycorrhizal fungi inoculum. The container shall be sufficiently rigid to hold ball shape and protect root mass during shipping.

2.1.7 Growth of Trunk and Crown

2.1.7.1 Deciduous Trees

A height to caliper relationship shall be provided in accordance with ANLA ANSI/ANLA Z60.1. Height of branching shall bear a relationship to the size and species of tree specified and with the crown in good balance with the trunk. The trees shall not be "poled" or the leader removed.

a. Single stem: The trunk shall be reasonably straight and symmetrical with crown and have a persistent main leader.

b. Multi-stem: All countable stems, in aggregate, shall average the size specified. To be considered a stem, there shall be no division of the trunk which branches more than 6 inches from ground level.

c. Specimen: The tree provided shall be well branched and pruned naturally according to the species. The form of growth desired, which may not be in accordance with natural growth habit, shall be as indicated.

2.1.7.2 Not Used

2.1.7.3 Deciduous Shrubs

Deciduous shrubs shall have the height and number of primary stems recommended by ANLA ANSI/ANLA Z60.1. Acceptable plant material shall be well shaped, with sufficient well-spaced side branches, and recognized by the trade as typical for the species grown in the region of the project.

2.1.7.4 Coniferous Evergreen Plant Material

Coniferous Evergreen plant material shall have the height-to-spread ratio recommended by ANLA ANSI/ANLA Z60.1. The coniferous evergreen trees shall not be "poled" or the leader removed. Acceptable plant material shall be exceptionally heavy, well shaped and trimmed to form a symmetrical and tightly knit plant. The form of growth desired shall be as indicated.

2.1.7.5 Not Used

2.1.7.6 Ground Cover and Vine Plant Material

Ground cover and vine plant material shall have the minimum number of runners and length of runner recommended by ANLA ANSI/ANLA Z60.1. Plant material shall have heavy, well developed and balanced crown with vigorous, well developed root system and shall be furnished in containers.

2.1.8 Plant Material Size

Plant material shall be furnished in sizes indicated. Plant material larger in size than specified may be provided at no additional cost to the Government.

2.1.9 Plant Material Measurement

Plant material measurements shall be in accordance with ANLA ANSI/ANLA Z60.1.

2.2 TOPSOIL

Topsoil shall be as defined in ASTM D 5268. When available, the topsoil shall be the existing surface soil stripped and stockpiled onsite in accordance with Section 02300 EARTHWORK. When additional topsoil is required beyond the available topsoil from the stripping operation, topsoil shall be delivered and amended as recommended by the soil test for the plant material specified. Topsoil shall be free from slag, cinders, stones, lumps of soil, sticks, roots, trash or other material over a minimum 1-1/2 inch diameter. Topsoil shall be free from viable plants and plant parts.

2.2.1 Planting Soil

Mix soil amendments (refer to 3.2.2) with topsoil at rates recommended by the soil test.

2.3 SOIL AMENDMENTS

Soil amendments shall consist of pH adjuster, fertilizer, organic material and soil conditioners meeting the following requirements. Vermiculite is not recommended.

2.3.1 pH Adjuster

The pH adjuster shall be an agricultural liming material in accordance with ASTM C 602. These materials may be burnt lime, hydrated lime, ground limestone, or shells. The pH adjuster shall be used to create a favorable soil pH for the plant material specified.

2.3.1.1 Limestone

Limestone material shall contain a minimum calcium carbonate equivalent of 80 percent. Gradation: A minimum 95 percent shall pass through a No. 8 sieve and a minimum 55 percent shall pass through a No. 60 sieve. To raise soil pH, ground limestone shall be used.

2.3.1.2 Hydrated Lime

Hydrated lime shall contain a minimum calcium carbonate equivalent of 110 percent. Gradation: A minimum 100 percent shall pass through a No. 8 sieve and a minimum 97 percent shall pass through a No. 60 sieve.

2.3.1.3 Burnt Lime

Burnt lime shall contain a minimum calcium carbonate equivalent of 140 percent. Gradation: A minimum 95 percent shall pass through a No. 8 sieve and a minimum 35 percent shall pass through a No. 60 sieve.

2.3.2 Fertilizer

It shall be as recommended by the soil test. Fertilizer shall be controlled release commercial grade; free flowing, pellet or tablet form; uniform in composition; and consist of a nitrogen-phosphorus-potassium ratio. The fertilizer shall be derived from sulphur coated urea, urea formaldehyde, plastic or polymer coated pills, or isobutylenediurea (IBDU). Fertilizer shall be balanced with the inclusion of trace minerals and micro-nutrients.

2.3.3 Organic Material

Organic material shall consist of either bonemeal, peat, rotted manure, decomposed wood derivatives, recycled compost, or worm castings.

2.3.3.1 Bonemeal

Bonemeal shall be a finely ground, steamed bone product containing from 2 to 4 percent nitrogen and 16 to 40 percent phosphoric acid.

2.3.3.2 Rotted Manure

Rotted manure shall be unleached horse, chicken, or cattle manure containing a maximum 25 percent by volume of straw, sawdust, or other bedding materials. Manure shall contain no chemicals or ingredients harmful to plants. The manure shall be heat treated to kill weed seeds and shall be free of stones, sticks, and soil.

2.3.3.3 Decomposed Wood Derivatives

Decomposed wood derivatives shall be ground bark, sawdust, or other wood waste material free of stones, sticks, and toxic substances harmful to plants, and stabilized with nitrogen.

2.3.3.4 Recycled Compost

Compost shall be a well decomposed, stable, weed free organic matter source. It shall be derived from food, agricultural, or industrial residuals; biosolids (treated sewage sludge); yard trimmings; or source-separated or mixed solid waste. The compost shall possess no objectionable odors and shall not resemble the raw material from which it was derived. The material shall not contain substances toxic to plants. Gradation: The compost material shall pass through a 3/8 inch screen, possess a pH of 5.5 to 8.0, and have a moisture content between 35-55 percent by weight. The material shall not contain more than 1 percent or less by weight of man-made foreign matter. Compost shall be cleaned of plastic materials larger than 2 inches in length.

2.3.3.5 Worm Castings

Worm castings shall be screened from worms and food source and shall be commercially packaged.

2.3.4 Soil Conditioner

Soil conditioner shall be sand, super absorbent polymers, calcined clay, or gypsum for single use or in combination to meet topsoil requirements for the plant material specified.

2.3.4.1 Sand

Sand shall be clean and free of toxic materials. Gradation: A minimum 95 percent by weight shall pass a No. 10 sieve and a minimum 10 percent by weight shall pass a No. 16 sieve. Greensand shall be balanced with the inclusion of trace minerals and nutrients.

2.3.4.2 Super Absorbent Polymers

To improve water retention in soils, super absorbent polymers shall be sized according to manufacturer's recommendations. Polymers shall be added as a soil amendment and be cross-linked polyacrylamide with an absorption capacity of 250-400 times its weight.

2.3.4.3 Calcined Clay

Granular particles shall be produced from montmorillonite clay calcined to minimum temperature of 1200 degrees F. Gradation: A minimum 90 percent passing No. 8 sieve; a minimum 99 percent shall be retained on No. 60 sieve; and a maximum 2 percent shall pass a No. 100 sieve. Bulk density: A maximum 40 pounds per cubic foot.

2.3.4.4 Gypsum

Gypsum shall be commercially packaged, free flowing, and a minimum 95 percent calcium sulfate by volume.

2.3.4.5 Expanded Shale, Clay, or Slate (ESCS)

Rotary kiln produced ESCS material shall be in conformance with ASTM D 5883.

2.4 MULCH

Mulch shall be free from weeds, mold, and other deleterious materials.

Mulch materials shall be native to the region. Rotted manure is not recommended to be used as a mulch because it would encourage surface rooting of the plant material and weeds.

2.4.1 Inorganic Mulch

When inorganic mulch is required for decorative purposes, it shall be provided in areas designated, and consist of:

a. Riverbank stone ranging in size from 18mm (3/4 inches) to 36 mm (1.5 inches)

2.4.2 Organic Mulch

Organic Mulch materials shall be native to the project site and consist of shredded hardwood mulch. Gradation: A maximum 50mm (2 inches) wide by 100mm (4 inches) long".

2.5 GEOTEXTILE

Geotextile shall be woven or nonwoven; polypropylene, polyester, or fiberglass, mat in accordance with ASTM D 5034 or ASTM D 5035. It shall be made specifically for use as a fabric around plant material. Nominal weight shall be a minimum 4 ounces per square yard. Permeability rate shall be a minimum 0.04 inch per second.

2.6 WOOD STAKING MATERIAL

Wood stakes shall be hardwood or fir; rough sawn; free from knots, rot, cross grain, or other defects that would impair their strength.

2.6.1 Bracing Stake

Wood bracing stakes shall be a minimum 2 x 2 inch square and a minimum 8 feet long with a point at one end. Stake shall be set without damaging rootball.

2.6.2 Wood Ground Stakes

Wood ground stakes shall be a minimum of 2 x 2 inch square and a minimum 3 feet long with a point at one end.

2.6.3 Deadmen

Wood deadmen shall be a minimum 4 x 4 x 36 inches long.

2.7 METAL STAKING AND GUYING MATERIAL

Metal shall be aluminum or steel consisting of recycled content made for holding plant material in place.

2.7.1 Bracing Stakes

Metal bracing stakes shall be a minimum 1 inch diameter and a minimum 8 feet long. Stake shall be set without damaging rootball.

2.7.2 Metal Ground Stakes

Metal ground stakes shall be a minimum 1/2 inch diameter and a minimum 3

feet long.

2.7.3 Earth Anchor

Metal earth anchors shall be a minimum 1/2 inch diameter and a minimum 2 feet long.

2.7.4 Guying Material

Metal guying material shall be a minimum 12 gauge wire. Multi-strand cable shall be woven wire. Guying material tensile strength shall conform to the size of tree to be held firmly in place.

2.7.5 Turnbuckle

Metal turnbuckles shall be galvanized or cadmium-plated steel, and shall be a minimum 3 inches long with closed screw eyes on each end. Screw thread tensile strength shall conform to the size of tree to be held firmly in place.

2.8 Not Used

2.9 RUBBER GUYING MATERIAL

Rubber chafing guards, consisting of recycled material, shall be used to protect tree trunks and branches when metal guying material is applied. The material shall be the same color throughout the project. Length shall be a minimum 1.5 times the circumference of the plant trunk at its base.

2.10 FLAG

Plastic flag material shall be used on guying material. It shall be a minimum 6 inches long. Tape color shall be consistent and visually complimentary to the entire project area. The tape color shall meet pedestrian visual safety requirements for day and night.

2.11 TREE ROOT BARRIERS

Tree root barriers shall be metal or plastic consisting of recycled content. Barriers shall utilize vertical stabilizing members to encourage downward tree root growth. Barriers shall limit, by a minimum 90 percent, the occurrence of surface roots. Tree root barriers which are designed to be used as plant pit liners will be rejected.

2.12 MYCORRHIZAL FUNGI INOCULUM

Mycorrhizal fungi inoculum shall be composed of multiple-fungus inoculum as recommended by the manufacturer for the plant material specified.

2.13 WATER

Unless otherwise directed, water shall be the responsibility of the Contractor. Water shall not contain elements toxic to plant life.

2.14 PESTICIDE

Pesticide shall be insecticide, herbicide, fungicide, nematocide, rodenticide or miticide. For the purpose of this specification a soil fumigant shall have the same requirements as a pesticide. The pesticide

material shall be EPA registered and approved.

2.15 LANDSCAPE EDGING

Steel edging, rolled edge, standard steel edging, fabricated in sections with loops stamped from or welded to face of sections approximately 30 inches (760mm) apart to receive stakes.

1. Edging Size: 1/8 inch (2.2mm) wide by 4 inches (102mm) deep.
2. Stakes: Tapered steel, 15 inches (381mm) long.
3. Accessories: Standard tapered ends, corners, and splicers as required.
4. Finish: Standard paint finish, color - black.

PART 3 EXECUTION

3.1 INSTALLING PLANT MATERIAL TIME AND CONDITIONS

3.1.1 Deciduous Plant Material Time

Deciduous plant material shall be installed from APril 15th to October 30th.

3.1.2 Evergreen Plant Material Time

Evergreen plant material shall be installed from April 15th to October 30th

3.1.3 Plant Material Conditions

Planting operations shall be performed only during periods when beneficial results can be obtained. When drought, excessive moisture, frozen ground or other unsatisfactory conditions prevail, the work shall be stopped when directed. When special conditions warrant a variance to the planting operations, proposed planting times shall be submitted for approval.

3.1.4 Tests

3.1.4.1 Percolation Test

Test for percolation shall be done to determine positive drainage of plant pits and beds. A positive percolation shall consist of a minimum (1 inch) per 3 hours; when a negative percolation test occurs. Refer to tree planting details.

3.1.4.2 Soil Requirements and Testing

Delivered select topsoil borrow, excavated plant pit soil and stockpiled topsoil shall be tested in accordance with ASTM D 5268 and ASTM D 4972 for determining the particle size, pH, organic matter content, and textural class, chemical analysis, soluble salts analysis, and mechanical analysis. Sample collection on site shall be random over the entire site. Sample collection for stockpiled topsoil shall be at different levels in the stockpile. The soil shall be free from debris, noxious weeds, toxic substances, or other materials harmful to plant growth. The test shall determine the quantities and type of soil amendments required to meet local growing conditions for the sod species specified.All topsoil shall meet the following requirements:

Material Passing 2.00 mm Sieve	Min.	Max.
Clay	5%	n/a
Silt	10%	70%

Sand and Gravel	20%	70%
Organic Matter	3%	20%
pH	6.1	7.5

3.2 SITE PREPARATION

3.2.1 Finished Grade, Topsoil and Underground Utilities

The Contractor shall verify that finished grades are as indicated on drawings, and that the placing of topsoil, the smooth grading, and the compaction requirements have been completed in accordance with Section 02300 EARTHWORK, prior to the commencement of the planting operation. The location of underground utilities and facilities in the area of the planting operation shall be verified. Damage to underground utilities and facilities shall be repaired at the Contractor's expense.

3.2.2 Layout

Plant material locations and bed outlines shall be staked on the project site before any excavation is made. Plant material locations may be adjusted to meet field conditions.

3.2.3 Protecting Existing Vegetation

When there are established lawns in the planting area, the turf shall be covered and/or protected during planting operations. Existing trees, shrubs, and plant beds that are to be preserved shall be barricaded along the dripline to protect them during planting operations.

3.3 EXCAVATION

3.3.1 Obstructions Below Ground

When obstructions below ground affect the work, shop drawings showing proposed adjustments to plant material location, type of plant and planting method shall be submitted for approval.

3.3.2 Turf Removal

Where the planting operation occurs in an existing lawn area, the turf shall be removed from the excavation area to a depth that will ensure the removal of the entire root system.

3.3.3 Plant Pits

Plant pits for ball and burlapped or container plant material shall be dug to a depth equal to the height of the root ball as measured from the base of the ball to the base of the plant trunk. Plant pits for bare-root plant material shall be dug to a depth equal to the height of the root system. Plant pits shall be dug a minimum 50 percent wider than the ball or root system to allow for root expansion. The pit shall be constructed with sides sloping towards the base as a cone, to encourage well aerated soil to be available to the root system for favorable root growth. Cylindrical pits with vertical sides shall not be used.

3.4 INSTALLATION

3.4.1 Setting Plant Material

Plant material shall be set plumb and held in position until sufficient soil has been firmly placed around root system or ball. In relation to the surrounding grade, the plant material shall be set even with the grade at which it was grown.

3.4.1.1 Bare-Root Plant Material

Bare-root plant material shall be placed in water a minimum 30 minutes prior to setting.

3.4.2 Tree Root Barrier

Tree root barriers shall be installed as recommended by the manufacturer. Tree root barriers shall be used for trees located up to a maximum 6 feet from paved surfaces or structures.

3.4.3 Backfill Soil Mixture

The backfill soil mixture may be a mix of topsoil and soil amendments suitable for the plant material specified. When practical, the excavated soil from the plant pit that is not amended provides the best backfill and shall be used.

3.4.4 Adding Mycorrhizal Fungi Inoculum

Mycorrhizal fungi inoculum shall be added as recommended by the manufacturer for the plant material specified.

3.4.5 Backfill Procedure

Prior to backfilling, all metal, wood, synthetic products, or treated burlap devices shall be removed from the ball or root system avoiding damage to the root system. The backfill procedure shall remove air pockets from around the root system. Additional requirements are as follows.

3.4.5.1 Balled and Burlapped, and Balled and Platformed Plant Material

Biodegradable burlap and tying material shall be carefully opened and folded back from the top a minimum 1/3 depth from the top of the root ball. Backfill mixture shall be added to the plant pit in 6 inch layers with each layer tamped.

3.4.5.2 Not Used

3.4.5.3 Container-Grown and Balled and Potted Plant Material

The plant material shall be carefully removed from containers that are not biodegradeable. Prior to setting the plant in the pit, a maximum 1/4 depth of the root mass, measured from the bottom, shall be spread apart to promote new root growth. For plant material in biodegradable containers the container shall be split prior to setting the plant with container. Backfill mixture shall be added to the plant pit in 6 inch layers with each layer tamped.

3.4.5.4 Earth Berm

An earth berm, consisting of backfill soil mixture, shall be formed with a minimum 4 inch height around the edge of the plant pit to aid in water retention and to provide soil for settling adjustments.

3.4.6 Plant Bed

Plant material shall be set in plant beds according to the drawings. Backfill soil mixture shall be placed on previously scarified subsoil to completely surround the root balls, and shall be brought to a smooth and even surface, blending to existing areas. Earth berms shall be provided. Polymers shall be spread uniformly over the plant bed and in the planting pit as recommended by the manufacturer and thoroughly incorporated into the soil to a maximum 4 inch depth.

3.4.7 Watering

Plant pits and plant beds shall be watered immediately after backfilling, until completely saturated.

3.4.8 Staking and Guying

Staking will be required when trees are unstable or will not remain set due to their size, shape, or exposure to high wind velocity.

3.4.8.1 One Bracing Stake

Trees 4 to 6 feet high shall be firmly anchored in place with one bracing stake. The bracing stake shall be placed on the side of the tree facing the prevailing wind. The bracing stake shall be driven vertically into firm ground and shall not injure the ball or root system. The tree shall be held firmly to the stake with a double strand of guying material. The guying material shall be firmly anchored at a minimum 1/2 tree height and shall prevent girdling. A chafing guard shall be used when metal is the guying material.

3.4.8.2 Two Bracing Stakes

Trees from 6 to 8 feet height shall be firmly anchored in place with 2 bracing stakes placed on opposite sides. Bracing stakes shall be driven vertically into firm ground and shall not injure the ball or root system. The tree shall be held firmly between the stakes with a double strand of guying material. The guying material shall be firmly anchored at a minimum 1/2 tree height and shall prevent girdling. Chafing guards shall be used when metal is the guying material.

3.4.8.3 Three Ground Stakes

Trees over a minimum 8 feet height and less than a maximum 6 inch caliper shall be held firmly in place with 3 bracing or ground stakes spaced equidistantly around the tree. Ground stakes shall be avoided in areas to be mowed. Stakes shall be driven into firm ground outside the earth berm. The guying material shall be firmly anchored at a minimum 1/2 tree height and shall prevent girdling. For trees over maximum 3 inch diameter at breast height, turnbuckles shall be used on the guying material for tree straightening purposes. One turnbuckle shall be centered on each guy line. Chafing guards shall be used when metal is the guying material.

3.4.9 Not Used

3.4.10 Flags

A flag shall be securely fastened to each guy line equidistant between the

tree and the stake, deadmen, or earth anchor. The flag shall be visible to pedestrians.

3.5 FINISHING

3.5.1 Plant Material

Prior to placing mulch, the installed area shall be uniformly edged to provide a clear division line between the planted area and the adjacent turf area, shaped as indicated. The installed area shall be raked and smoothed while maintaining the earth berms.

3.5.2 Placing Geotextile

Prior to placing mulch, geotextile shall be placed as indicated in accordance with the manufacturer's recommendations.

3.5.3 Placing Mulch

The placement of mulch shall occur a maximum 48 hours after planting. Mulch, used to reduce soil water loss, regulate soil temperature and prevent weed growth, shall be spread to cover the installed area with a minimum 4 inch uniform thickness. Mulch shall be kept out of the crowns of shrubs, ground cover, and vines and shall be kept off buildings, sidewalks and other facilities.

3.5.4 Pruning

Pruning shall be accomplished by trained and experienced personnel. The pruning of trees and palms shall be in accordance with ANSI A300. Only dead or broken material shall be pruned from installed plants. The typical growth habit of individual plant material shall be retained. Clean cuts shall be made flush with the parent trunk. Improper cuts, stubs, dead and broken branches shall be removed. "Headback" cuts at right angles to the line of growth will not be permitted. Trees shall not be poled or the leader removed, nor shall the leader be pruned or "topped off".

3.6 MAINTENANCE DURING PLANTING OPERATION

Installed plant material shall be maintained in a healthy growing condition. Maintenance operations shall begin immediately after each plant is installed to prevent desiccation and shall continue until the plant establishment period commences. Installed areas shall be kept free of weeds, grass, and other undesired vegetation. The maintenance includes maintaining the mulch, watering, and adjusting settling.

3.7 APPLICATION OF PESTICIDE

When application of a pesticide becomes necessary to remove a pest or disease, a pesticide treatment plan shall be submitted and coordinated with the installation pest management program.

3.7.1 Technical Representative

The certified installation pest management coordinator shall be the technical representative, and shall be present at all meetings concerning treatment measures for pest or disease control. They may be present during treatment application.

3.7.2 Application

A state certified applicator shall apply required pesticides in accordance with EPA label restrictions and recommendations. Clothing and personal protective equipment shall be used as specified on the pesticide label. A closed system is recommended as it prevents the pesticide from coming into contact with the applicator or other persons. Water for formulating shall only come from designated locations. Filling hoses shall be fitted with a backflow preventer meeting local plumbing codes or standards. Overflow shall be prevented during the filling operation. Prior to each day of use, the equipment used for applying pesticide shall be inspected for leaks, clogging, wear, or damage. Any repairs are to be performed immediately.

3.8 RESTORATION AND CLEAN UP

3.8.1 Restoration

Turf areas, pavements and facilities that have been damaged from the planting operation shall be restored to original condition at the Contractor's expense.

3.8.2 Clean Up

Excess and waste material shall be removed from the installed area and shall be disposed offsite. Adjacent paved areas shall be cleared.

3.9 PLANT ESTABLISHMENT PERIOD

3.9.1 Commencement

Upon completion of the last day of the planting operation, the plant establishment period for maintaining installed plant material in a healthy growing condition shall commence and shall be in effect for the remaining contract time period, not to exceed 12 months. Written calendar time period shall be furnished for the plant establishment period. When there is more than one plant establishment period, the boundaries of the planted area covered for each period shall be described. The plant establishment period shall be coordinated with Sections 02921 SEEDING; 02922 SODDING; and 02923 SPRIGGING. The plant establishment period shall be modified for inclement weather shut down periods, or for separate completion dates for areas.

3.9.2 Maintenance During Establishment Period

Maintenance of plant material shall include straightening plant material, straightening stakes; tightening guying material; correcting girdling; supplementing mulch; pruning dead or broken branch tips; maintaining plant material labels; watering; eradicating weeds, insects and disease; post-fertilization; and removing and replacing unhealthy plants.

3.9.2.1 Watering Plant Material

The plant material shall be watered as necessary to prevent desiccation and to maintain an adequate supply of moisture within the root zone. An adequate supply of moisture is estimated to be the equivalent of 1 inch absorbed water per week, delivered in the form of rain or augmented by watering. Run-off, puddling and wilting shall be prevented. Unless otherwise directed, watering trucks shall not be driven over turf areas. Watering of other adjacent areas or existing plant material shall be

prevented.

3.9.2.2 Weeding

Grass and weeds in the installed areas shall not be allowed to reach a maximum 3 inches height before being completely removed, including the root system.

3.9.2.3 Pesticide Treatment

Treatment for disease or pest shall be in accordance with paragraph APPLICATION OF PESTICIDE.

3.9.2.4 Post-Fertilization

The plant material shall be topdressed at least once during the period of establishment with controlled release fertilizer, reference paragraph SOIL AMENDMENTS. Apply at the rate of 2 pounds per 100 square feet of plant pit or bed area. Dry fertilizer adhering to plants shall be flushed off. The application shall be timed prior to the advent of winter dormancy.

3.9.2.5 Plant Pit Settling

When settling occurs to the backfill soil mixture, additional backfill soil shall be added to the plant pit or plant bed until the backfill level is equal to the surrounding grade. Serious settling that affects the setting of the plant in relation to the maximum depth at which it was grown requires replanting in accordance with paragraph INSTALLATION. The earth berm shall be maintained.

3.9.2.6 Maintenance Record

A record shall be furnished describing the maintenance work performed, the quantity of plant losses, diagnosis of the plant loss, and the quantity of replacements made on each site visit.

3.9.3 Unhealthy Plant Material

A tree shall be considered unhealthy or dead when the main leader has died back, or up to a maximum 25 percent of the crown has died. A shrub shall be considered unhealthy or dead when up to a maximum 25 percent of the plant has died. This condition shall be determined by scraping on a branch an area 1/16 inch square, maximum, to determine if there is a green cambium layer below the bark. The Contractor shall determine the cause for unhealthy plant material and shall provide recommendations for replacement. Unhealthy or dead plant material shall be removed immediately and shall be replaced as soon as seasonal conditions permit.

3.9.4 Replacement Plant Material

Unless otherwise directed, plant material shall be provided for replacement in accordance with paragraph PLANT MATERIAL. Replacement plant material shall be installed in accordance with paragraph INSTALLATION, and recommendations in paragraph PLANT ESTABLISHMENT PERIOD. Plant material shall be replaced in accordance with paragraph WARRANTY. An extended plant establishment period shall not be required for replacement plant material.

3.9.5 Maintenance Instructions

Written instructions shall be furnished containing drawings and other necessary information for year-round care of the installed plant material; including, when and where maintenance should occur, and the procedures for plant material replacement,.

-- End of Section --

SECTION TABLE OF CONTENTS

DIVISION 03 - CONCRETE

SECTION 03101

STRUCTURAL CONCRETE FORMWORK

05/98

PART 1 GENERAL

1.1 REFERENCES
1.2 Not Used
1.3 DESIGN

PART 2 PRODUCTS

2.1 FORM MATERIALS
2.1.1 Forms For Class B Finish
2.1.2 Not Used
2.1.3 Forms For Class D Finish
2.1.4 Retain-In-Place Metal Forms
2.1.5 Not Used
2.1.6 Form Ties
2.1.7 Form Releasing Agents

PART 3 EXECUTION

3.1 INSTALLATION
3.1.1 Formwork
3.2 CHAMFERING
3.3 COATING
3.4 REMOVAL OF FORMS

-- End of Section Table of Contents --

SECTION 03101

STRUCTURAL CONCRETE FORMWORK
05/98

PART 1 GENERAL

1.1 REFERENCES

The publications listed below form a part of this specification to the extent referenced. The publications are referred to in the text by basic designation only.

ACI INTERNATIONAL (ACI)

ACI 347R	(1994) Guide to Formwork for Concrete

DEPARTMENT OF COMMERCE (DOC)

DOC PS 1	(1996) Voluntary Product Standard - Construction and Industrial Plywood

1.2 Not Used

1.3 DESIGN

Formwork shall be designed in accordance with methodology of ACI 347R for anticipated loads, lateral pressures, and stresses. Forms shall be capable of producing a surface which meets the requirements of the class of finish specified in Section 03300 CAST-IN-PLACE STRUCTURAL CONCRETE. Forms shall be capable of withstanding the pressures resulting from placement and vibration of concrete.

PART 2 PRODUCTS

2.1 FORM MATERIALS

2.1.1 Forms For Class B Finish

Forms for Class B finished surfaces shall be plywood panels conforming to DOC PS 1, Grade B-B concrete form panels, Class I or II. Other form materials or liners may be used provided the smoothness and appearance of concrete produced will be equivalent to that produced by the plywood concrete form panels. Forms for round columns shall be the prefabricated seamless type.

2.1.2 Not Used

2.1.3 Forms For Class D Finish

Forms for Class D finished surfaces, except where concrete is placed against earth, shall be wood or steel or other approved concrete form material.

2.1.4 Retain-In-Place Metal Forms

Retain-in-place metal forms for concrete slabs and roofs shall be as specified in Section 05300 STEEL DECKING.

2.1.5 Not Used

2.1.6 Form Ties

Form ties shall be factory-fabricated metal ties, shall be of the removable or internal disconnecting or snap-off type, and shall be of a design that will not permit form deflection and will not spall concrete upon removal. Solid backing shall be provided for each tie. Except where removable tie rods are used, ties shall not leave holes in the concrete surface less than (1/4 inch) nor more than (1 inch) deep and not more than (1 inch) in diameter. Removable tie rods shall be not more than (1-1/2 inches) in diameter.

2.1.7 Form Releasing Agents

Form releasing agents shall be commercial formulations that will not bond with, stain or adversely affect concrete surfaces. Agents shall not impair subsequent treatment of concrete surfaces depending upon bond or adhesion nor impede the wetting of surfaces to be cured with water or curing compounds.

PART 3 EXECUTION

3.1 INSTALLATION

3.1.1 Formwork

Forms shall be mortar tight, properly aligned and adequately supported to produce concrete surfaces meeting the surface requirements specified in Section 03300 CAST-IN-PLACE STRUCTURAL CONCRETE and conforming to construction tolerance given in TABLE 1. Where concrete surfaces are to have a Class B finish, joints in form panels shall be arranged as approved. Where forms for continuous surfaces are placed in successive units, the forms shall fit over the completed surface to obtain accurate alignment of the surface and to prevent leakage of mortar. Forms shall not be reused if there is any evidence of surface wear and tear or defects which would impair the quality of the surface. Surfaces of forms to be reused shall be cleaned of mortar from previous concreting and of all other foreign material before reuse. Form ties that are to be completely withdrawn shall be coated with a nonstaining bond breaker.

3.2 CHAMFERING

Except as otherwise shown, external corners that will be exposed shall be chamfered, beveled, or rounded by moldings placed in the forms.

3.3 COATING

Forms for Class B finished surfaces shall be coated with a form releasing agent before the form or reinforcement is placed in final position. The coating shall be used as recommended in the manufacturer's printed or written instructions. Forms for Class D finished surfaces may be wet with water in lieu of coating immediately before placing concrete, except that in cold weather with probable freezing temperatures, coating shall be mandatory. Surplus coating on form surfaces and coating on reinforcing

steel and construction joints shall be removed before placing concrete.

3.4 REMOVAL OF FORMS

Forms shall be removed preventing injury to the concrete and ensuring the complete safety of the structure. Formwork for columns, walls, side of beams and other parts not supporting the weight of concrete may be removed when the concrete has attained sufficient strength to resist damage from the removal operation but not before at least 24 hours has elapsed since concrete placement. Supporting forms and shores shall not be removed from beams, floors and walls until the structural units are strong enough to carry their own weight and any other construction or natural loads. Supporting forms or shores shall not be removed before the concrete strength has reached 70 percent of design strength, as determined by field cured cylinders or other approved methods. This strength shall be demonstrated by job-cured test specimens, and by a structural analysis considering the proposed loads in relation to these test strengths and the strength of forming and shoring system. The job-cured test specimens for form removal purposes shall be provided in numbers as directed and shall be in addition to those required for concrete quality control. The specimens shall be removed from molds at the age of 24 hours and shall receive, insofar as possible, the same curing and protection as the structures they represent.

TABLE 1

TOLERANCES FOR FORMED SURFACES

1. Variations from the plumb:	In any 3 m(10 feet) of length ---------- 6 mm (1/4 inch)
a. In the lines and surfaces of columns, piers, walls and in arises	Maximum for entire length ---------- 25 mm(1 inch)
b. For exposed corner columns,control-joint grooves, and other conspicuous lines	In any 6 m (20 feet) of length ---------- ---- 6 mm (1/4 inch) Maximum for entire length---------- 13 mm (1/2 inch)
2. Variation from the level or from the grades indicated on the drawings:	In any 3 m (10 feet) of length ----------6 mm (1/4 inch) In any bay or in any 6 m (20 feet) of length---------- 10 mm(3/8 inch)
a. In slab soffits, ceilings, beam soffits, and in arises, measured before removal of supporting shores	Maximum for entire length ---------- 20 mm (3/4 inch)
b. In exposed lintels, sills, parapets, horizontal grooves, and other conspicuous lines	In any bay or in any 6 m (20 feet) of length ---------- ----- 6 mm (1/4 inch) Maximum for entire length---------- 13 mm (1/2 inch)

TABLE 1

TOLERANCES FOR FORMED SURFACES

3. Variation of the linear building lines from established position in plan	In any 6 m(20 feet) -----13 mm(1/2 inch Maximum ----------25 mm (1 inch)
4. Variation of distance between walls, columns, partitions	6 mm (1/4 inch) per 3 m (10 feet) of distance, but not more than 13 mm (1/2 inch) in any one bay,and not more than 25 mm (1 inch) total variation
5. Variation in the sizes and locations of sleeves, floor openings, and wall opening	Minus ---------- 6 mm (1/4 inch) Plus ---------- 13 mm (1/2 inch)
6. Variation in cross-sectional dimensions of columns and beams and in the thickness of slabs and walls	Minus ---------- 6 mm (1/4 inch) Plus ---------- 13 mm (1/2 inch)
7. Footings:	
a. Variation of dimensions in plan	Minus ---------- 13 mm (1/2 inch) Plus ---------- 50 mm (2 inches) when formed or plus 75 mm (3 inches) when placed against unformed excavation
b. Misplacement of eccentricity	2 percent of the footing width in the direction of misplacement but not more than 50 mm (2 inches)
c. Reduction in thickness of specified thickness	Minus ---------- 5 percent
8. Variation in steps:	Riser ---------- 3mm (1/8 inch)
a. In a flight of stairs	Tread ---------- 6 mm (1/4 inch)
b. In consecutive steps	Riser ---------- 2 mm (1/16 inch) Tread ---------- 3 mm (1/8 inch)

)

-- End of Section --

SECTION TABLE OF CONTENTS

DIVISION 03 - CONCRETE

SECTION 03150

EXPANSION JOINTS AND CONTRACTION JOINTS

05/98

PART 1 GENERAL

1.1 REFERENCES
1.2 Not Used
1.3 DELIVERY AND STORAGE

PART 2 PRODUCTS

2.1 CONTRACTION JOINT STRIPS
2.2 PREFORMED EXPANSION JOINT FILLER
2.3 SEALANT
2.3.1 Preformed Polychloroprene Elastomeric Type
2.3.2 Not Used
2.3.3 Not Used
2.3.4 Field Molded Type

PART 3 EXECUTION

3.1 JOINTS
3.1.1 Contraction Joints
3.1.1.1 Joint Strips
3.1.1.2 Sawed Joints
3.1.2 Expansion Joints
3.1.3 Joint Sealant
3.1.3.1 Not Used
3.1.3.2 Joints With Field-Molded Sealant
3.2 Not Used
3.3 CONSTRUCTION JOINTS

-- End of Section Table of Contents --

SECTION 03150

EXPANSION JOINTS AND CONTRACTION JOINTS
05/98

PART 1 GENERAL

1.1 REFERENCES

The publications listed below form a part of this specification to the extent referenced. The publications are referred to in the text by basic designation only.

AMERICAN HARDBOARD ASSOCIATION (AHA)

AHA ANSI/AHA A135.4	(1995) Basic Hardboard

AMERICAN SOCIETY FOR TESTING AND MATERIALS (ASTM)

ASTM C 919	(1984; R 1992) Use of Sealants in Acoustical Applications
ASTM C 920	(1995) Elastomeric Joint Sealants
ASTM D 1751	(1983; R 1991) Preformed Expansion Joint Filler for Concrete Paving and Structural Construction (Nonextruding and Resilient Bituminous Types)
ASTM D 1752	(1984; R 1996) Preformed Sponge Rubber and Cork Expansion Joint Fillers for Concrete Paving and Structural Construction
ASTM D 2628	(1991) Preformed Polychloroprene Elastomeric Joint Seals for Concrete Pavements
ASTM D 5249	(1995) Backer Material for Use With Cold and Hot-Applied Joint Sealants in Portland-Cement Concrete and Asphalt Joints

1.2 Not Used

1.3 DELIVERY AND STORAGE

Material delivered and placed in storage shall be stored off the ground and protected from moisture, dirt, and other contaminants. Sealants shall be delivered in the manufacturer's original unopened containers. Sealants whose shelf life has expired shall be removed from the site.

PART 2 PRODUCTS

2.1 CONTRACTION JOINT STRIPS

Contraction joint strips shall be 1/8 inch thick tempered hardboard conforming to AHA ANSI/AHA A135.4, Class 1.

2.2 PREFORMED EXPANSION JOINT FILLER

Expansion joint filler shall be preformed material conforming to ASTM D 1751 or ASTM D 1752. Unless otherwise indicated, filler material shall be 3/8 inchthick and of a width applicable for the joint formed. Backer material, when required, shall conform to ASTM D 5249.

2.3 SEALANT

Joint sealant shall conform to the following:

2.3.1 Preformed Polychloroprene Elastomeric Type

ASTM D 2628.

2.3.2 Not Used

2.3.3 Not Used

2.3.4 Field Molded Type

ASTM C 920, Type M for horizontal joints or Type NS for vertical joints, Class 25, and Use NT. Bond breaker material shall be polyethylene tape, coated paper, metal foil or similar type materials. The back-up material shall be compressible, non-shrink, nonreactive with sealant, and non-absorptive material type such as extruded butyl or polychloroprene rubber.

PART 3 EXECUTION

3.1 JOINTS

Joints shall be installed at locations indicated and as authorized.

3.1.1 Contraction Joints

Contraction joints may be constructed by inserting tempered hardboard strips into the plastic concrete using a steel parting bar, when necessary, or by cutting the concrete with a saw after concrete has set. Joints shall be approximately (1/8 inch) wide and shall extend into the slab one-fourth the slab thickness, minimum, but not less than (1 inch).

3.1.1.1 Joint Strips

Strips shall be of the required dimensions and as long as practicable. After the first floating, the concrete shall be grooved with a tool at the joint locations. The strips shall be inserted in the groove and depressed until the top edge of the vertical surface is flush with the surface of the slab. The slab shall be floated and finished as specified. Working of the concrete adjacent to the joint shall be the minimum necessary to fill voids and consolidate the concrete. Where indicated, the top portion of the strip shall be sawed out after the curing period to form a recess for sealer. True alignment of the strips shall be maintained during insertion.

3.1.1.2 Sawed Joints

Joint sawing shall be early enough to prevent uncontrolled cracking in the slab, but late enough that this can be accomplished without appreciable spalling. Concrete sawing machines shall be adequate in number and power, and with sufficient replacement blades to complete the sawing at the required rate. Joints shall be cut to true alignment and shall be cut in sequence of concrete placement. Sludge and cutting debris shall be removed.

3.1.2 Expansion Joints

Preformed expansion joint filler shall be used in expansion and isolation joints in slabs around columns and between slabs on grade and vertical surfaces where indicated. The filler shall extend the full slab depth, unless otherwise indicated. The edges of the joint shall be neatly finished with an edging tool of 1/8 inch radius, except where a resilient floor surface will be applied. Where the joint is to receive a sealant, the filler strips shall be installed at the proper level below the finished floor with a slightly tapered, dressed and oiled wood strip temporarily secured to the top to form a recess to the size shown on the drawings. The wood strip shall be removed after the concrete has set. Contractor may opt to use a removable expansion filler cap designed and fabricated for this purpose in lieu of the wood strip. The groove shall be thoroughly cleaned of laitance, curing compound, foreign materials, protrusions of hardened concrete, and any dust which shall be blown out of the groove with oil-free compressed air.

3.1.3 Joint Sealant

Exposed field molded sawed contraction joints and expansion joints in slabs shall be filled with joint sealant, unless otherwise shown. Joint surfaces shall be clean, dry, and free of oil or other foreign material which would adversely affect the bond between sealant and concrete. Joint sealant shall be applied as recommended by the manufacturer of the sealant.

3.1.3.1 Not Used

3.1.3.2 Joints With Field-Molded Sealant

Joints shall not be sealed when the sealant material, ambient air, or concrete temperature is less than 40 degrees F. When the sealants are meant to reduce the sound transmission characteristics of interior walls, ceilings, and floors the guidance provided in ASTM C 919 shall be followed. Joints requiring a bond breaker shall be coated with curing compound or with bituminous paint. Bond breaker and back-up material shall be installed where required. Joints shall be primed and filled flush with joint sealant in accordance with the manufacturer's recommendations.

3.2 Not Used

3.3 CONSTRUCTION JOINTS

Construction joints are specified in Section 03300 CAST-IN-PLACE STRUCTURAL CONCRETE except that construction joints coinciding with expansion and contraction joints shall be treated as expansion or contraction joints as applicable.

-- End of Section --

SECTION TABLE OF CONTENTS

DIVISION 03 - CONCRETE

SECTION 03200

CONCRETE REINFORCEMENT

09/97

PART 1 GENERAL

1.1 REFERENCES
1.2 SUBMITTALS
1.3 WELDING
1.4 DELIVERY AND STORAGE

PART 2 PRODUCTS

2.1 DOWELS
2.2 Not Used
2.3 REINFORCING STEEL
2.4 WELDED WIRE FABRIC
2.5 WIRE TIES
2.6 SUPPORTS

PART 3 EXECUTION

3.1 REINFORCEMENT
3.1.1 Placement
3.1.2 Splicing
3.2 WELDED-WIRE FABRIC PLACEMENT
3.3 DOWEL INSTALLATION

-- End of Section Table of Contents --

SECTION 03200

CONCRETE REINFORCEMENT
09/97

PART 1 GENERAL

1.1 REFERENCES

The publications listed below form a part of this specification to the extent referenced. The publications are referred to in the text by basic designation only.

AMERICAN SOCIETY FOR TESTING AND MATERIALS (ASTM)

ASTM A 53	(1996) Pipe, Steel, Black and Hot-Dipped, Zinc-Coated, Welded and Seamless
ASTM A 82	(1995a) Steel Wire, Plain, for Concrete Reinforcement
ASTM A 185	(1994) Steel Welded Wire Fabric, Plain, for Concrete Reinforcement
ASTM A 615/A 615M	(1996a) Deformed and Plain Billet-Steel Bars for Concrete Reinforcement
ASTM A 675/A 675M	(1990a; R 1995) Steel Bars, Carbon, Hot-Wrought, Special Quality, Mechanical Properties
ASTM A 706/A 706M	(1995b) Low-Alloy Steel Deformed and Plain Bars for Concrete Reinforcement
ASTM A 767/A 767M	(1995) Zinc-Coated (Galvanized) Steel Bars in Concrete Reinforcement
ASTM A 775/A 775M	(1996) Epoxy-Coated Reinforcement Steel Bars
ASTM A 884/A 884M	(1996a) Epoxy-Coated Steel Wire and Welded Wire Fabric for Reinforcement

AMERICAN WELDING SOCIETY (AWS)

AWS D1.4	(1992) Structural Welding Code - Reinforcing Steel

CONCRETE REINFORCING STEEL INSTITUTE (CRSI)

CRSI MSP-1	(1996) Manual of Standard Practice

1.2 SUBMITTALS

Government approval is required for submittals with a "GA" designation; submittals having an "FIO" designation are for information only. The following shall be submitted in accordance with Section 01330 SUBMITTAL PROCEDURES:

SD-04 Drawings

Concrete Reinforcement System; GA1.

Detail drawings showing reinforcing steel placement, schedules, sizes, grades, and splicing and bending details. Drawings shall show support details including types, sizes and spacing.

1.3 WELDING

Welders shall be qualified in accordance with AWS D1.4. Qualification test shall be performed at the worksite and the Contractor shall notify the Contracting Officer 24 hours prior to conducting tests. Special welding procedures and welders qualified by others may be accepted as permitted by AWS D1.4.

1.4 DELIVERY AND STORAGE

Reinforcement and accessories shall be stored off the ground on platforms, skids, or other supports.

PART 2 PRODUCTS

2.1 DOWELS

Dowels shall conform to ASTM A 675/A 675M, Grade 80. Steel pipe conforming to ASTM A 53, Schedule 80, may be used as dowels provided the ends are closed with metal or plastic inserts or with mortar.

2.2 Not Used

2.3 REINFORCING STEEL

Reinforcing steel shall be deformed bars conforming to ASTM A 615/A 615M or ASTM A 706/A 706M, Grade 60,sizes as indicated. Cold drawn wire used for spiral reinforcement shall conform to ASTM A 82. In highly corrosive environments or when directed by the Contracting Officer, reinforcing steel shall conform to ASTM A 767/A 767M or ASTM A 775/A 775M as appropriate.

2.4 WELDED WIRE FABRIC

Welded wire fabric shall conform to ASTM A 185 When directed by the Contracting Officer for special applications, welded wire fabric shall conform to ASTM A 884/A 884M.

2.5 WIRE TIES

Wire ties shall be 16 gauge or heavier black annealed steel wire.

2.6 SUPPORTS

Bar supports for formed surfaces shall be designed and fabricated in accordance with CRSI MSP-1 and shall be steel or precast concrete blocks. Precast concrete blocks shall have wire ties and shall be not less than (4

inches) square when supporting reinforcement on ground. Precast concrete block shall have compressive strength equal to that of the surrounding concrete. Where concrete formed surfaces will be exposed to weather or where surfaces are to be painted, steel supports within (1/2 inch) of concrete surface shall be galvanized, plastic protected or of stainless steel. Concrete supports used in concrete exposed to view shall have the same color and texture as the finish surface. For slabs on grade, supports shall be precast concrete blocks, plastic coated steel fabricated with bearing plates, or specifically designed wire-fabric supports fabricated of plastic.

PART 3 EXECUTION

3.1 REINFORCEMENT

Reinforcement shall be fabricated to shapes and dimensions shown and shall conform to the requirements of (ACI 318/318R). Reinforcement shall be cold bent unless otherwise authorized. Bending may be accomplished in the field or at the mill. Bars shall not be bent after embedment in concrete. Safety caps shall be placed on all exposed ends of vertical concrete reinforcement bars that pose a danger to life safety. Wire tie ends shall face away from the forms.

3.1.1 Placement

Reinforcement shall be free from loose rust and scale, dirt, oil, or other deleterious coating that could reduce bond with the concrete. Reinforcement shall be placed in accordance with (ACI 318/318R) at locations shown plus or minus one bar diameter. Reinforcement shall not be continuous through expansion joints and shall be as indicated through construction or contraction joints. Concrete coverage shall be as indicated or as required by (ACI 318/318R). If bars are moved more than one bar diameter to avoid interference with other reinforcement, conduits or embedded items, the resulting arrangement of bars, including additional bars required to meet structural requirements, shall be approved before concrete is placed.

3.1.2 Splicing

Splices of reinforcement shall conform to (ACI 318/318R) and shall be made only as required or indicated. Splicing shall be by lapping or by mechanical or welded butt connection; except that lap splices shall not be used for bars larger than No. 11 unless otherwise indicated. Welding shall conform to AWS D1.4. Welded butt splices shall be full penetration butt welds. Lapped bars shall be placed in contact and securely tied or spaced transversely apart to permit the embedment of the entire surface of each bar in concrete. Lapped bars shall not be spaced farther apart than one-fifth the required length of lap or (6 inches). Mechanical butt splices shall be in accordance with the recommendation of the manufacturer of the mechanical splicing device. Butt splices shall develop 125 percent of the specified minimum yield tensile strength of the spliced bars or of the smaller bar in transition splices. Bars shall be flame dried before butt splicing. Adequate jigs and clamps or other devices shall be provided to support, align, and hold the longitudinal centerline of the bars to be butt spliced in a straight line.

3.2 WELDED-WIRE FABRIC PLACEMENT

Welded-wire fabric shall be placed in slabs as indicated. Fabric placed in

slabs on grade shall be continuous between expansion, construction, and contraction joints. Fabric placement at joints shall be as indicated. Lap splices shall be made in such a way that the overlapped area equals the distance between the outermost crosswires plus (2 inches). Laps shall be staggered to avoid continuous laps in either direction. Fabric shall be wired or clipped together at laps at intervals not to exceed (4 feet). Fabric shall be positioned by the use of supports.

3.3 DOWEL INSTALLATION

Dowels shall be installed in slabs on grade at locations indicated and at right angles to joint being doweled. Dowels shall be accurately positioned and aligned parallel to the finished concrete surface before concrete placement. Dowels shall be rigidly supported during concrete placement. One end of dowels shall be coated with a bond breaker.

-- End of Section --

SECTION TABLE OF CONTENTS

DIVISION 03 - CONCRETE

SECTION 03300

CAST-IN-PLACE STRUCTURAL CONCRETE

09/95

PART 1 GENERAL

1.1 REFERENCES
1.2 Not Used
1.3 LUMP SUM CONTRACT
1.4 SUBMITTALS
1.5 QUALIFICATIONS
1.6 Not Used
1.7 Not Used
1.8 GENERAL REQUIREMENTS
1.8.1 Tolerances
1.8.1.1 Floors
1.8.1.2 Not Used
1.8.1.3 Floors by the Straightedge System
1.8.2 Strength Requirements and w/c Ratio
1.8.2.1 Strength Requirements
1.8.2.2 Water-Cement Ratio
1.8.3 Air Entrainment
1.8.4 Slump
1.8.5 Concrete Temperature
1.8.6 Size of Coarse Aggregate
1.8.7 Special Properties and Products
1.9 MIXTURE PROPORTIONS
1.9.1 Proportioning Studies for Normal Weight Concrete
1.9.2 Not Used
1.9.3 Not Used
1.9.4 Average Compressive Strength Required for Mixtures
1.9.4.1 Computations from Test Records
1.9.4.2 Computations without Previous Test Records
1.10 STORAGE OF MATERIALS
1.11 GOVERNMENT ASSURANCE INSPECTION AND TESTING
1.11.1 Materials
1.11.2 Fresh Concrete
1.11.3 Hardened Concrete
1.11.4 Inspection

PART 2 PRODUCTS

2.1 CEMENTITIOUS MATERIALS
2.1.1 Portland Cement
2.1.2 High-Early-Strength Portland Cement
2.1.3 Blended Cements Not Used
2.1.4 Pozzolan (Fly Ash)
2.1.5 Not Used
2.1.6 Not Used
2.2 AGGREGATES

2.2.1 Fine Aggregate
2.2.2 Coarse Aggregate
2.3 CHEMICAL ADMIXTURES
2.3.1 Air-Entraining Admixture
2.3.2 Accelerating Admixture
2.3.3 Water-Reducing or Retarding Admixture
2.3.4 High-Range Water Reducer
2.3.5 Not Used
2.3.6 Not Used
2.3.7 Other Chemical Admixtures
2.4 CURING MATERIALS
2.4.1 Impervious-Sheet
2.4.2 Membrane-Forming Compound
2.4.3 Burlap and Cotton Mat
2.5 WATER
2.6 NONSHRINK GROUT
2.7 NOT USED
2.8 LATEX BONDING AGENT
2.9 EPOXY RESIN
2.10 EMBEDDED ITEMS
2.11 NOT USED
2.12 PERIMETER INSULATION
2.13 VAPOR BARRIER
2.14 JOINT MATERIALS
2.14.1 Joint Fillers and, Sealers
2.14.2 Contraction Joints in Slabs

PART 3 EXECUTION

3.1 PREPARATION FOR PLACING
3.1.1 Foundations
3.1.1.1 Concrete on Earth Foundations
3.1.1.2 Not Used.
3.1.1.3 Excavated Surfaces in Lieu of Forms
3.1.2 Not Used
3.1.3 Vapor Barrier
3.1.4 Perimeter Insulation
3.1.5 Embedded Items
3.2 Not Used
3.3 CONCRETE PRODUCTION
3.4 Not Used.
3.5 Not Used.
3.6 TRANSPORTING CONCRETE TO PROJECT SITE
3.7 CONVEYING CONCRETE ON SITE
3.7.1 Buckets
3.7.2 Transfer Hoppers
3.7.3 Trucks
3.7.4 Chutes
3.7.5 Belt Conveyors
3.7.6 Concrete Pumps
3.8 PLACING CONCRETE
3.8.1 Depositing Concrete
3.8.2 Consolidation
3.8.3 Cold Weather Requirements
3.8.4 Hot Weather Requirements
3.8.5 Prevention of Plastic Shrinkage Cracking
3.8.6 Not Used.
3.8.7 Placing Concrete in Congested Areas
3.8.8 Placing Flowable Concrete

3.9 JOINTS
3.9.1 Construction Joints
3.9.2 Contraction Joints in Slabs on Grade
3.9.3 Expansion Joints
3.9.4 Not Used
3.9.5 Dowels and Tie Bars
3.10 FINISHING FORMED SURFACES
3.10.1 Class B Finish
3.10.2 Class D Finish
3.10.3 Not Used
3.11 REPAIRS
3.11.1 Damp-Pack Mortar Repair
3.11.2 Repair of Major Defects
3.11.2.1 Surface Application of Mortar Repair
3.11.2.2 Repair of Deep and Large Defects
3.12 FINISHING UNFORMED SURFACES
3.12.1 General
3.12.2 Rough Slab Finish
3.12.3 Floated Finish
3.12.4 Troweled Finish
3.12.5 Not Used
3.12.6 Non-Slip Finish
3.12.6.1 Broomed
3.13 Not Used
3.14 Not Used
3.15 CURING AND PROTECTION
3.15.1 General
3.15.2 Moist Curing
3.15.3 Membrane Forming Curing Compounds
3.15.4 Impervious Sheeting
3.15.5 Ponding or Immersion
3.15.6 Cold Weather Curing and Protection
3.16 SETTING BASE PLATES AND BEARING PLATES
3.16.1 Damp-Pack Bedding Mortar
3.16.2 Nonshrink Grout
3.16.2.1 Mixing and Placing of Nonshrink Grout
3.16.2.2 Treatment of Exposed Surfaces
3.17 TESTING AND INSPECTION FOR CONTRACTOR QUALITY CONTROL
3.17.1 Grading and Corrective Action
3.17.1.1 Fine Aggregate
3.17.1.2 Coarse Aggregate
3.17.2 Quality of Aggregates
3.17.3 Scales, Batching and Recording
3.17.4 Batch-Plant Control
3.17.5 Concrete Mixture
3.17.6 Inspection Before Placing
3.17.7 Placing
3.17.8 Vibrators
3.17.9 Curing Inspection
3.17.10 Cold-Weather Protection
3.17.11 Mixer Uniformity
3.17.12 Reports

-- End of Section Table of Contents --

SECTION 03300

CAST-IN-PLACE STRUCTURAL CONCRETE
09/95

PART 1 GENERAL

1.1 REFERENCES

The publications listed below form a part of this specification to the extent referenced. The publications are referred to in the text by basic designation only.

ACI INTERNATIONAL (ACI)

ACI 117/117R	(1990; Errata) Standard Tolerances for Concrete Construction and Materials
ACI 211.1	(1991) Standard Practice for Selecting Proportions for Normal, Heavyweight, and Mass Concrete
ACI 214.3R	(1988) Simplified Version of the Recommended Practice for Evaluation of Strength Test Results
ACI 301	(1996) Standard Specifications for Structural Concrete
ACI 305R	(1991) Hot Weather Concreting
ACI 318/318R	(1995) Building Code Requirements for Reinforced Concrete and Commentary

AMERICAN ASSOCIATION OF STATE HIGHWAY AND TRANSPORTATION OFFICIALS (AASHTO)

AASHTO M 182	(1991) Burlap Cloth Made From Jute or Kenaf

AMERICAN SOCIETY FOR TESTING AND MATERIALS (ASTM)

ASTM C 31	(1991) Making and Curing Concrete Test Specimens in the Field
ASTM C 33	(1993) Concrete Aggregates
ASTM C 39	(1994) Compressive Strength of Cylindrical Concrete Specimens
ASTM C 42	(1994) Obtaining and Testing Drilled Cores and Sawed Beams of Concrete
ASTM C 78	(1994) Flexural Strength of Concrete (Using Simple Beam With Third-Point Loading)

ASTM C 94	(1996) Ready-Mixed Concrete
ASTM C 136	(1995a) Sieve Analysis of Fine and Coarse Aggregates
ASTM C 143	(1990a) Slump of Hydraulic Cement Concrete
ASTM C 150	(1995) Portland Cement
ASTM C 171	(1995) Sheet Materials for Curing Concrete
ASTM C 172	(1990) Sampling Freshly Mixed Concrete
ASTM C 173	(1994a) Air Content of Freshly Mixed Concrete by the Volumetric Method
ASTM C 192	(1990a) Making and Curing Concrete Test Specimens in the Laboratory
ASTM C 231	(1991b) Air Content of Freshly Mixed Concrete by the Pressure Method
ASTM C 260	(1995) Air-Entraining Admixtures for Concrete
ASTM C 309	(1995) Liquid Membrane-Forming Compounds for Curing Concrete
ASTM C 494	(1992) Chemical Admixtures for Concrete
ASTM C 578	(1995) Rigid, Cellular Polystyrene Thermal Insulation
ASTM C 618	(1996a) Coal Fly Ash and Raw or Calcined Natural Pozzolan for Use as a Mineral Admixture in Portland Cement Concrete
ASTM C 881	(1990) Epoxy-Resin-Base Bonding Systems for Concrete
ASTM C 1017	(1992) Chemical Admixtures for Use in Producing Flowing Concrete
ASTM C 1059	(1991) Latex Agents for Bonding Fresh to Hardened Concrete
ASTM C 1064	(1986; R 1993) Temperature of Freshly Mixed Portland Cement Concrete
ASTM C 1077	(1995a) Laboratories Testing Concrete and Concrete Aggregates for Use in Construction and Criteria for Laboratory Evaluation
ASTM C 1107	(1991a) Packaged Dry, Hydraulic-Cement Grout (Nonshrink)
ASTM D 75	(1987; R 1992) Sampling Aggregates

ASTM D 1751	(1983; R 1991) Preformed Expansion Joint Filler for Concrete Paving and Structural Construction (Nonextruding and Resilient Bituminous Types)
ASTM D 1752	(1984; R 1992) Preformed Sponge Rubber and Cork Expansion Joint Fillers for Concrete Paving and Structural Construction
ASTM E 96	(1995) Water Vapor Transmission of Materials

CORPS OF ENGINEERS (COE)

COE CRD-C 104	(1980) Method of Calculation of the Fineness Modulus of Aggregate
COE CRD-C 400	(1963) Requirements for Water for Use in Mixing or Curing Concrete
COE CRD-C 521	(1981) Standard Test Method for Frequency and Amplitude of Vibrators for Concrete
COE CRD-C 540	(1971; R 1981) Standard Specification for Nonbituminous Inserts for Contraction Joints in Portland Cement Concrete Airfield Pavements, Sawable Type
COE CRD-C 572	(1974) Corps of Engineers Specifications for Polyvinylchloride Waterstop

NATIONAL READY-MIXED CONCRETE ASSOCIATION (NRMCA)

NRMCA TMMB-01	(1992) Truck Mixer Agitator and Front Discharge Concrete Carrier Standards of the Truck Mixer Manufacturers Bureau
NRMCA CPMB 100	(1990) Concrete Plant Standards
NRMCA QC 3	(1984) Quality Control Manual: Section 3, Plant Certifications Checklist: Certification of Ready Mixed Concrete Production Facilities

1.2 Not Used

1.3 LUMP SUM CONTRACT

Under this type of contract concrete items will be paid for by lump sum and will not be measured. The work covered by these items consists of furnishing all concrete materials, reinforcement, miscellaneous embedded materials, and equipment, and performing all labor for the forming, manufacture, transporting, placing, finishing, curing, and protection of concrete in these structures.

1.4 SUBMITTALS

Government approval is required for submittals with a "GA" designation;

submittals having an "FIO" designation are for information only. The following shall be submitted in accordance with Section 01330 SUBMITTAL PROCEDURES:

SD-08 Statements

Mixture Proportions; GA1.

The results of trial mixture design studies along with a statement giving the maximum nominal coarse aggregate size and the proportions of ingredients that will be used in the manufacture of each strength or class of concrete, at least 14 days prior to commencing concrete placing operations. Aggregate weights shall be based on the saturated surface dry condition. The statement shall be accompanied by test results from an approved independent commercial testing laboratory, showing that mixture design studies have been made with materials proposed for the project and that the proportions selected will produce concrete of the qualities indicated. No substitutions shall be made in the materials used in the mixture design studies without additional tests to show that the quality of the concrete is satisfactory.

SD-09 Reports

Testing and Inspection for Contractor Quality Control; FIO.

Certified copies of laboratory test reports, including mill tests and all other test data, for portland cement, blended cement, pozzolan, ground granulated blast furnace slag, silica fume, aggregate, admixtures, and curing compound proposed for use on this project.

1.5 QUALIFICATIONS

Contractor Quality Control personnel assigned to concrete construction shall be American Concrete Institute (ACI) Certified Workmen in one of the following grades or shall have written evidence of having completed similar qualification programs:

Concrete Field Testing Technician, Grade I
Concrete Laboratory Testing Technician, Grade I or II
Concrete Construction Inspector, Level II

The foreman or lead journeyman of the flatwork finishing crew shall have similar qualification for ACI Concrete Flatwork Technician/Finisher or equal, with written documentation.

1.6 Not Used

1.7 Not Used

1.8 GENERAL REQUIREMENTS

1.8.1 Tolerances

Except as otherwise specified herein, tolerances for concrete batching, mixture properties, and construction as well as definition of terms and application practices shall be in accordance with ACI 117/117R. Level and grade tolerance measurements of slabs shall be made as soon as possible after finishing; when forms or shoring are used, the measurements shall be made prior to removal.

1.8.1.1 Floors

For the purpose of this Section the following terminology correlation between ACI 117/117R and this Section shall apply:

Floor Profile Quality Classification From ACI 117/117R	This Section
Conventional Bullfloated	Same
Conventional Straightedged	Same
Flat	Float Finish or Trowel Finish
Very Flat	Same. Use only with F-system

Levelness tolerance shall not apply where design requires floors to be sloped to drains or sloped for other reasons.

1.8.1.2 Not Used

1.8.1.3 Floors by the Straightedge System

The flatness of the floors shall be carefully controlled and the tolerances shall be measured by the straightedge system as specified in paragraph 4.5.7 of ACI 117/117R, using a (10 foot) straightedge, within 72 hours after floor slab installation and before shores and/or forms are removed. The listed tolerances shall be met at any and every location at which the straightedge can be placed.

Trowel Finish 3mm (1/8 inch)

1.8.2 Strength Requirements and w/c Ratio

1.8.2.1 Strength Requirements

Specified compressive strength (f'c) shall be as follows:

COMPRESSIVE STRENGTH	STRUCTURE OR PORTION OF STRUCTURE
(3500 psi) at 28 days	All Concrete

Concrete made with high-early strength cement shall have a 7-day strength equal to the specified 28-day strength for concrete made with Type I or II portland cement. Compressive strength shall be determined in accordance with ASTM C 39.

a. Evaluation of Concrete Compressive Strength. Compressive strength specimens ((6 by 12 inch) cylinders) shall be fabricated by the Contractor and laboratory cured in accordance with ASTM C 31 and tested in accordance with ASTM C 39. The strength of the concrete will be considered satisfactory so long as the average of all sets of three consecutive test results equals or exceeds the specified compressive strength f'c and no individual test result falls below the specified strength f'c by more than (500 psi). A "test" is defined as the average of two companion cylinders, or if only one cylinder is tested, the results of the single cylinder test. Additional analysis or testing, including taking cores and/or load tests may be required at the Contractor's expense when the strength of the concrete in the structure is considered

potentially deficient.

b. Investigation of Low-Strength Compressive Test Results. When any strength test of standard-cured test cylinders falls below the specified strength requirement by more than (500 psi) or if tests of field-cured cylinders indicate deficiencies in protection and curing, steps shall be taken to assure that the load-carrying capacity of the structure is not jeopardized. When the strength of concrete in place is considered potentially deficient, cores shall be obtained and tested in accordance with ASTM C 42. At least three representative cores shall be taken from each member or area of concrete in place that is considered potentially deficient. The location of cores will be determined by the Contracting Officer to least impair the strength of the structure. Concrete in the area represented by the core testing will be considered adequate if the average strength of the cores is equal to at least 85 percent of the specified strength requirement and if no single core is less than 75 percent of the specified strength requirement. Non-destructive tests (tests other than test cylinders or cores) shall not be used as a basis for acceptance or rejection. The Contractor shall perform the coring and repair the holes. Cores will be tested by the Government.

c. Load Tests. If the core tests are inconclusive or impractical to obtain or if structural analysis does not confirm the safety of the structure, load tests may be directed by the Contracting Officer in accordance with the requirements of ACI 318/318R. Concrete work evaluated by structural analysis or by results of a load test as being understrength shall be corrected in a manner satisfactory to the Contracting Officer. All investigations, testing, load tests, and correction of deficiencies shall be performed by and at the expense of the Contractor and must be approved by the Contracting Officer, except that if all concrete is found to be in compliance with the drawings and specifications, the cost of investigations, testing, and load tests will be at the expense of the Government.

1.8.2.2 Water-Cement Ratio

Maximum water-cement ratio (w/c) for normal weight concrete shall be as follows:

WATER-CEMENT RATIO, BY WEIGHT	STRUCTURE OR PORTION OF STRUCTURE
0.45	Slabs
0.50	All Other Concrete

These w/c's may cause higher strengths than that required above for compressive or flexural strength. The maximum w/c required will be the equivalent w/c as determined by conversion from the weight ratio of water to cement plus pozzolan, by the weight equivalency method as described in ACI 211.1.

1.8.3 Air Entrainment

All concrete shall be air entrained to contain between 5 and 7 percent total air, except that when the nominal maximum size coarse aggregate is

(3/4 inch) or smaller it shall be between 5.5 and 7.5 percent. Specified air content shall be attained at point of placement into the forms. Air content for normal weight concrete shall be determined in accordance with ASTM C 231.

1.8.4 Slump

Slump of the concrete, as delivered to the point of placement into the forms, shall be within the following limits. Slump shall be determined in accordance with ASTM C 143.

Structural Element	Slump Minimum	Slump Maximum
Walls, columns and beams	(2 in).	(4 in).
Foundation walls, substructure walls, footings, slabs	(1 in).	(3 in).
Any structural concrete approved for placement by pumping:		
At pump	(2 in).	(6 in).
At discharge of line	(1 in).	(4 in).

When use of a plasticizing admixture conforming to ASTM C 1017 or when a Type F or G high range water reducing admixture conforming to ASTM C 494 is permitted to increase the slump of concrete, concrete shall have a slump of (2 to 4 inches) before the admixture is added and a maximum slump of (8 inches) at the point of delivery after the admixture is added.

1.8.5 Concrete Temperature

The temperature of the concrete as delivered shall not exceed (90 degrees F). When the ambient temperature during placing is (40 degrees F) or less, or is expected to be at any time within 6 hours after placing, the temperature of the concrete as delivered shall be between (55 and 75 degrees F).

1.8.6 Size of Coarse Aggregate

The largest feasible nominal maximum size aggregate (NMSA) specified in paragraph AGGREGATES shall be used in each placement. However, nominal maximum size of aggregate shall not exceed any of the following: three-fourths of the minimum cover for reinforcing bars, three-fourths of the minimum clear spacing between reinforcing bars, one-fifth of the narrowest dimension between sides of forms, or one-third of the thickness of slabs or toppings.

1.8.7 Special Properties and Products

Concrete may contain admixtures other than air entraining agents, such as water reducers, superplasticizers, or set retarding agents to provide special properties to the concrete, if specified or approved. Any of these materials to be used on the project shall be used in the mix design studies.

1.9 MIXTURE PROPORTIONS

Concrete shall be composed of portland cement, other cementitious and

pozzolanic materials as specified, aggregates, water and admixtures as specified.

1.9.1 Proportioning Studies for Normal Weight Concrete

Trial design batches, mixture proportioning studies, and testing requirements for various classes and types of concrete specified shall be the responsibility of the Contractor. Mixture proportions shall be based on compressive strength as determined by test specimens fabricated in accordance with ASTM C 192 and tested in accordance with ASTM C 39. Samples of all materials used in mixture proportioning studies shall be representative of those proposed for use in the project and shall be accompanied by the manufacturer's or producer's test reports indicating compliance with these specifications. Trial mixtures having proportions, consistencies, and air content suitable for the work shall be made based on methodology described in ACI 211.1, using at least three different water-cement ratios for each type of mixture, which will produce a range of strength encompassing those required for each class and type of concrete required on the project. The maximum water-cement ratios required in the paragraph Maximum Allowable w/c Ratio will be the equivalent water-cement ratio as determined by conversion from the weight ratio of water to cement plus pozzolan by the weight equivalency method as described in ACI 211.1.

If pozzolan is used in the concrete mixture, the minimum pozzolan content shall be 15 percent by weight of the total cementitious material, and the maximum shall be 25 percent. Laboratory trial mixtures shall be designed for maximum permitted slump and air content. Separate sets of trial mixture studies shall be made for each combination of cementitious materials and each combination of admixtures proposed for use. No combination of either shall be used until proven by such studies, except that, if approved in writing and otherwise permitted by these specifications, an accelerator or a retarder may be used without separate trial mixture study. Separate trial mixture studies shall also be made for concrete for any conveying or placing method proposed which requires special properties and for concrete to be placed in unusually difficult placing locations. The temperature of concrete in each trial batch shall be reported. For each water-cement ratio, at least three test cylinders for each test age shall be made and cured in accordance with ASTM C 192. They shall be tested at 7 and 28 days in accordance with ASTM C 39. From these test results, a curve shall be plotted showing the relationship between water-cement ratio and strength for each set of trial mix studies. In addition, a curve shall be plotted showing the relationship between 7 day and 28 day strengths. Each mixture shall be designed to promote easy and suitable concrete placement, consolidation and finishing, and to prevent segregation and excessive bleeding.

1.9.2 Not Used

1.9.3 Not Used

1.9.4 Average Compressive Strength Required for Mixtures

The mixture proportions selected during mixture design studies shall produce a required average compressive strength (f'cr) exceeding the specified compressive strength (f'c) by the amount indicated below. This required average compressive strength, f'cr, will not be a required acceptance criteria during concrete production. However, whenever the daily average compressive strength at 28 days drops below f'cr during concrete production, or daily average 7-day strength drops below a strength correlated with the 28-day f'cr, the mixture shall be adjusted, as

approved, to bring the daily average back up to f'cr. During production, the required f'cr shall be adjusted, as appropriate, based on the standard deviation being attained on the job.

1.9.4.1 Computations from Test Records

Where a concrete production facility has test records, a standard deviation shall be established in accordance with the applicable provisions of ACI 214.3R. Test records from which a standard deviation is calculated shall represent materials, quality control procedures, and conditions similar to those expected; shall represent concrete produced to meet a specified strength or strengths (f'c) within (1,000 psi) of that specified for proposed work; and shall consist of at least 30 consecutive tests. A strength test shall be the average of the strengths of two cylinders made from the same sample of concrete and tested at 28 days. Required average compressive strength f'cr used as the basis for selection of concrete proportions shall be the larger of the equations that follow using the standard deviation as determined above:

(f'cr = f'c + 1.34S where units are in psi)

(f'cr = f'c + 2.33S - 500 where units are in psi)

Where S = standard deviation

Where a concrete production facility does not have test records meeting the requirements above but does have a record based on 15 to 29 consecutive tests, a standard deviation shall be established as the product of the calculated standard deviation and a modification factor from the following table:

NUMBER OF TESTS	MODIFICATION FACTOR FOR STANDARD DEVIATION
15	1.16
20	1.08
25	1.03
30 or more	1.00

1.9.4.2 Computations without Previous Test Records

When a concrete production facility does not have sufficient field strength test records for calculation of the standard deviation, the required average strength f'cr shall be determined as follows:

a. If the specified compressive strength f'c is less than (3,000 psi),

(f'cr = f'c + 1000 psi)

b. If the specified compressive strength f'c is (3,000 to 5,000 psi),

(f'cr = f'c + 1,200 psi)

c. If the specified compressive strength f'c is over (5,000 psi),

(f'cr = f'c + 1,400 psi)

1.10 STORAGE OF MATERIALS

Cement and other cementitious materials shall be stored in weathertight buildings, bins, or silos which will exclude moisture and contaminants and keep each material completely separated. Aggregate stockpiles shall be arranged and used in a manner to avoid excessive segregation and to prevent contamination with other materials or with other sizes of aggregates. Aggregate shall not be stored directly on ground unless a sacrificial layer is left undisturbed. Reinforcing bars and accessories shall be stored above the ground on platforms, skids or other supports. Other materials shall be stored in such a manner as to avoid contamination and deterioration. Admixtures which have been in storage at the project site for longer than 6 months or which have been subjected to freezing shall not be used unless retested and proven to meet the specified requirements. Materials shall be capable of being accurately identified after bundles or containers are opened.

1.11 GOVERNMENT ASSURANCE INSPECTION AND TESTING

Day-to day inspection and testing shall be the responsibility of the Contractor Quality Control (CQC) staff. However, representatives of the Contracting Officer can and will inspect construction as considered appropriate and will monitor operations of the Contractor's CQC staff. Government inspection or testing will not relieve the Contractor of any of his CQC responsibilities.

1.11.1 Materials

The Government will sample and test aggregates, cementitious materials, other materials, and concrete to determine compliance with the specifications as considered appropriate. The Contractor shall provide facilities and labor as may be necessary for procurement of representative test samples. Samples of aggregates will be obtained at the point of batching in accordance with ASTM D 75. Other materials will be sampled from storage at the jobsite or from other locations as considered appropriate. Samples may be placed in storage for later testing when appropriate.

1.11.2 Fresh Concrete

Fresh concrete will be sampled as delivered in accordance with ASTM C 172 and tested in accordance with these specifications, as considered necessary.

1.11.3 Hardened Concrete

Tests on hardened concrete will be performed by the Government when such tests are considered necessary.

1.11.4 Inspection

Concrete operations may be tested and inspected by the Government as the project progresses. Failure to detect defective work or material will not prevent rejection later when a defect is discovered nor will it obligate the Government for final acceptance.

PART 2 PRODUCTS

2.1 CEMENTITIOUS MATERIALS

Cementitious Materials shall be portland cement, or portland cement in combination with pozzolan and shall conform to appropriate specifications listed below. Use of cementitious materials in concrete which will have surfaces exposed in the completed structure shall be restricted so there is no change in color, source, or type of cementitious material.

2.1.1 Portland Cement

ASTM C 150, Type I with a maximum 15 percent amount of tricalcium aluminate, or Type II

2.1.2 High-Early-Strength Portland Cement

ASTM C 150, Type III with tricalcium aluminate limited to 5 percent. Type III cement shall be used only in isolated instances and only when approved in writing.

2.1.3 Blended Cements Not Used

2.1.4 Pozzolan (Fly Ash)

ASTM C 618, Class C or F with the optional requirements for multiple factor, drying shrinkage, and uniformity from Table 2A of ASTM C 618. . If pozzolan is used, it shall never be less than 15 percent nor more than 25 percent by weight of the total cementitious material.

2.1.5 Not Used

2.1.6 Not Used

2.2 AGGREGATES

Aggregates shall conform to the following.

2.2.1 Fine Aggregate

Fine aggregate shall conform to the quality and gradation requirements of ASTM C 33.

2.2.2 Coarse Aggregate

Coarse aggregate shall conform to ASTM C 33, Class 5S, size designation No. 4 or No. 67.

2.3 CHEMICAL ADMIXTURES

Chemical admixtures, when required or permitted, shall conform to the appropriate specification listed. Admixtures shall be furnished in liquid form and of suitable concentration for easy, accurate control of dispensing.

2.3.1 Air-Entraining Admixture

ASTM C 260 and shall consistently entrain the air content in the specified ranges under field conditions.

2.3.2 Accelerating Admixture

ASTM C 494, Type C or E, except that calcium chloride or admixtures containing calcium chloride shall not be used.

2.3.3 Water-Reducing or Retarding Admixture

ASTM C 494, Type A, B, or D, except that the 6-month and 1-year compressive and flexural strength tests are waived.

2.3.4 High-Range Water Reducer

ASTM C 494, Type F or G, except that the 6-month and 1-year strength requirements are waived. The admixture shall be used only when approved in writing, such approval being contingent upon particular mixture control as described in the Contractor's Quality Control Plan and upon performance of separate mixture design studies.

2.3.5 Not Used

2.3.6 Not Used

2.3.7 Other Chemical Admixtures

Chemical admixtures for use in producing flowing concrete shall comply with ASTM C 1017, Type I or II. These admixtures shall be used only when approved in writing, such approval being contingent upon particular mixture control as described in the Contractor's Quality Control Plan and upon performance of separate mixture design studies.

2.4 CURING MATERIALS

2.4.1 Impervious-Sheet

Impervious-sheet materials shall conform to ASTM C 171, type optional, except, that polyethylene sheet shall not be used.

2.4.2 Membrane-Forming Compound

Membrane-Forming curing compound shall conform to ASTM C 309, Type 1-D or 2, except that only a styrene acrylate or chlorinated rubber compound meeting Class B requirements shall be used for surfaces that are to be painted or are to receive bituminous roofing, or waterproofing, or floors that are to receive adhesive applications of resilient flooring. The curing compound selected shall be compatible with any subsequent paint, roofing, waterproofing, or flooring specified. Nonpigmented compound shall contain a fugitive dye, and shall have the reflective requirements in ASTM C 309 waived.

2.4.3 Burlap and Cotton Mat

Burlap and cotton mat used for curing shall conform to AASHTO M 182.

2.5 WATER

Water for mixing and curing shall be fresh, clean, potable, and free of injurious amounts of oil, acid, salt, or alkali, except that non-potable water may be used if it meets the requirements of COE CRD-C 400.

2.6 NONSHRINK GROUT

Nonshrink grout shall conform to ASTM C 1107 and shall be a commercial formulation suitable for the proposed application.

2.7 NOT USED

2.8 LATEX BONDING AGENT

Latex agents for bonding fresh to hardened concrete shall conform to ASTM C 1059.

2.9 EPOXY RESIN

Epoxy resins for use in repairs shall conform to ASTM C 881, Type V, Grade 2. Class as appropriate to the existing ambient and surface temperatures.

2.10 EMBEDDED ITEMS

Embedded items shall be of the size and type indicated or as needed for the application. Dovetail slots shall be galvanized steel.

2.11 NOT USED

2.12 PERIMETER INSULATION

Perimeter insulation shall be extruded polystyrene conforming to ASTM C 578, Type IV.

2.13 VAPOR BARRIER

Vapor barrier shall be polyethylene sheeting with a minimum thickness of or other equivalent material having a vapor permeance rating not exceeding as determined in accordance with ASTM E 96.

2.14 JOINT MATERIALS

2.14.1 Joint Fillers and, Sealers

Expansion joint fillers shall be preformed non-bituminous materials conforming to ASTM D 1751 orASTM D 1752. Materials for and sealing of joints shall conform to the requirements of Section 07900 JOINT SEALING.

2.14.2 Contraction Joints in Slabs

Sawable type contraction joint inserts shall conform to COE CRD-C 540. Nonsawable joint inserts shall have sufficient stiffness to permit placement in plastic concrete without undue deviation from a straight line and shall conform to the physical requirements of COE CRD-C 540, with the exception of Section 3.4 "Resistance to Sawing". Plastic inserts shall be polyvinyl chloride conforming to the materials requirements of COE CRD-C 572.

PART 3 EXECUTION

3.1 PREPARATION FOR PLACING

Before commencing concrete placement, the following shall be performed. Surfaces to receive concrete shall be clean and free from frost, ice, mud, and water. Forms shall be in place, cleaned, coated, and adequately supported, in accordance with Section 03101 STRUCTURAL CONCRETE FORMWORK. Reinforcing steel shall be in place, cleaned, tied, and adequately

supported, in accordance with Section 03200 CONCRETE REINFORCEMENT. Transporting and conveying equipment shall be in-place, ready for use, clean, and free of hardened concrete and foreign material. Equipment for consolidating concrete shall be at the placing site and in proper working order. Equipment and material for curing and for protecting concrete from weather or mechanical damage shall be at the placing site, in proper working condition and in sufficient amount for the entire placement. When hot, windy conditions during concreting appear probable, equipment and material shall be at the placing site to provide windbreaks, shading, fogging, or other action to prevent plastic shrinkage cracking or other damaging drying of the concrete.

3.1.1 Foundations

3.1.1.1 Concrete on Earth Foundations

Earth (subgrade, base, or subbase courses) surfaces upon which concrete is to be placed shall be clean, damp, and free from debris, frost, ice, and standing or running water. Prior to placement of concrete, the foundation shall be well drained and shall be satisfactorily graded and uniformly compacted.

3.1.1.2 Not Used.

3.1.1.3 Excavated Surfaces in Lieu of Forms

Concrete for footings may be placed directly against the soil provided the earth or rock has been carefully trimmed, is uniform and stable, and meets the compaction requirements of Section 02315 EXCAVATION, FILLING, AND BACKFILLING FOR BUILDINGS. The concrete shall be placed without becoming contaminated by loose material, and the outline of the concrete shall be within the specified tolerances.

3.1.2 Not Used

3.1.3 Vapor Barrier

Vapor barrier shall be provided beneath the interior on-grade concrete floor slabs. The greatest widths and lengths practicable shall be used to eliminate joints wherever possible. Joints shall be lapped a minimum of (12 inches). Torn, punctured, or damaged vapor barrier material shall be removed and new vapor barrier shall be provided prior to placing concrete. For minor repairs, patches may be made using laps of at least (12 inches). Lapped joints shall be sealed and edges patched with pressure-sensitive adhesive or tape not less than (2 inches) wide and compatible with the membrane. Vapor barrier shall be placed directly on underlying subgrade, base course, or capillary water barrier, unless it consists of crushed material or large granular material which could puncture the vapor barrier. In this case, the surface shall be choked with a light layer of sand, as approved, before placing the vapor barrier. A (2 inch) layer of compacted, clean concrete sand (fine aggregate) shall be placed on top of the vapor barrier before placing concrete. Concrete placement shall be controlled so as to prevent damage to the vapor barrier, or any covering sand.

3.1.4 Perimeter Insulation

Perimeter insulation shall be installed at locations indicated. Adhesive shall be used where insulation is applied to the interior surface of

foundation walls and may be used for exterior application.

3.1.5 Embedded Items

Before placement of concrete, care shall be taken to determine that all embedded items are firmly and securely fastened in place as indicated on the drawings, or required. Conduit and other embedded items shall be clean and free of oil and other foreign matter such as loose coatings or rust, paint, and scale. The embedding of wood in concrete will be permitted only when specifically authorized or directed. Voids in sleeves, inserts, and anchor slots shall be filled temporarily with readily removable materials to prevent the entry of concrete into voids. Welding shall not be performed on embedded metals within (1 feet) of the surface of the concrete. Tack welding shall not be performed on or to embedded items.

3.2 Not Used

3.3 CONCRETE PRODUCTION

Batch-type equipment shall be used for producing concrete. Ready-mixed concrete shall be batched, mixed, and transported in accordance with ASTM C 94, except as otherwise specified. Truck mixers shall comply with NRMCA TMMB-01. Ready-mix plant equipment and facilities shall be certified in accordance with NRMCA QC 3. Approved batch tickets shall be furnished for each load of ready-mixed concrete. Site-mixed concrete shall be produced in accordance with ACI 301, and plant shall conform to NRMCA CPMB 100.

3.4 Not Used.

3.5 Not Used.

3.6 TRANSPORTING CONCRETE TO PROJECT SITE

Concrete shall be transported to the placing site in truck mixers .

3.7 CONVEYING CONCRETE ON SITE

Concrete shall be conveyed from mixer or transporting unit to forms as rapidly as possible and within the time interval specified by methods which will prevent segregation or loss of ingredients using following equipment. Conveying equipment shall be cleaned before each placement.

3.7.1 Buckets

The interior hopper slope shall be not less than 58 degrees from the horizontal, the minimum dimension of the clear gate opening shall be at least 5 times the nominal maximum-size aggregate, and the area of the gate opening shall not be less than (2 square feet). The maximum dimension of the gate opening shall not be greater than twice the minimum dimension. The bucket gates shall be essentially grout tight when closed and may be manually, pneumatically, or hydraulically operated except that buckets larger than (2 cubic yards) shall not be manually operated. The design of the bucket shall provide means for positive regulation of the amount and rate of deposit of concrete in each dumping position.

3.7.2 Transfer Hoppers

Concrete may be charged into nonagitating hoppers for transfer to other conveying devices. Transfer hoppers shall be capable of receiving concrete

directly from delivery vehicles and shall have conical-shaped discharge features. The transfer hopper shall be equipped with a hydraulically operated gate and with a means of external vibration to effect complete discharge. Concrete shall not be held in nonagitating transfer hoppers more than 30 minutes.

3.7.3 Trucks

Truck mixers operating at agitating speed or truck agitators used for transporting plant-mixed concrete shall conform to the requirements of ASTM C 94. Nonagitating equipment shall be used only for transporting plant-mixed concrete over a smooth road and when the hauling time is less than 15 minutes. Bodies of nonagitating equipment shall be smooth, watertight, metal containers specifically designed to transport concrete, shaped with rounded corners to minimize segregation, and equipped with gates that will permit positive control of the discharge of the concrete.

3.7.4 Chutes

When concrete can be placed directly from a truck mixer, agitator, or nonagitating equipment, the chutes normally attached to this equipment by the manufacturer may be used. A discharge deflector shall be used when required by the Contracting Officer. Separate chutes and other similar equipment will not be permitted for conveying concrete.

3.7.5 Belt Conveyors

Belt conveyors shall be designed and operated to assure a uniform flow of concrete from mixer to final place of deposit without segregation of ingredients or loss of mortar and shall be provided with positive means, such as discharge baffle or hopper , for preventing segregation of the concrete at the transfer points and the point of placing. Belt conveyors shall be constructed such that the idler spacing shall not exceed (36 inches). The belt speed shall be a minimum of (300 feet) per minute and a maximum of (750 feet) per minute. If concrete is to be placed through installed horizontal or sloping reinforcing bars, the conveyor shall discharge concrete into a pipe or elephant truck that is long enough to extend through the reinforcing bars.

3.7.6 Concrete Pumps

Concrete may be conveyed by positive displacement pump when approved. The pumping equipment shall be piston or squeeze pressure type; pneumatic placing equipment shall not be used. The pipeline shall be rigid steel pipe or heavy-duty flexible hose. The inside diameter of the pipe shall be at least 3 times the nominal maximum-size coarse aggregate in the concrete mixture to be pumped but not less than (4 inches). Aluminum pipe shall not be used.

3.8 PLACING CONCRETE

Mixed concrete shall be discharged within 1-1/2 hours or before the mixer drum has revolved 300 revolutions, whichever comes first after the introduction of the mixing water to the cement and aggregates. When the concrete temperature exceeds (85 degrees F), the time shall be reduced to 45 minutes. Concrete shall be placed within 15 minutes after it has been discharged from the transporting unit. Concrete shall be handled from mixer or transporting unit to forms in a continuous manner until the approved unit of operation is completed. Adequate scaffolding, ramps and

walkways shall be provided so that personnel and equipment are not supported by in-place reinforcement. Placing will not be permitted when the sun, heat, wind, or limitations of facilities furnished by the Contractor prevent proper consolidation, finishing and curing. Sufficient placing capacity shall be provided so that concrete can be kept free of cold joints.

3.8.1 Depositing Concrete

Concrete shall be deposited as close as possible to its final position in the forms, and there shall be no vertical drop greater than (5 feet) except where suitable equipment is provided to prevent segregation and where specifically authorized. Depositing of the concrete shall be so regulated that it will be effectively consolidated in horizontal layers not more than (12 inches) thick, except that all slabs shall be placed in a single layer. Concrete to receive other construction shall be screeded to the proper level. Concrete shall be deposited continuously in one layer or in layers so that fresh concrete is deposited on in-place concrete that is still plastic. Fresh concrete shall not be deposited on concrete that has hardened sufficiently to cause formation of seams or planes of weakness within the section. Concrete that has surface dried, partially hardened, or contains foreign material shall not be used. When temporary spreaders are used in the forms, the spreaders shall be removed as their service becomes unnecessary.

3.8.2 Consolidation

Immediately after placing, each layer of concrete shall be consolidated by internal vibrators, except for slabs (4 inches) thick or less. The vibrators shall at all times be adequate in effectiveness and number to properly consolidate the concrete; a spare vibrator shall be kept at the jobsite during all concrete placing operations. The vibrators shall have a frequency of not less than 10,000 vibrations per minute, an amplitude of at least (0.025 inch), and the head diameter shall be appropriate for the structural member and the concrete mixture being placed. Vibrators shall be inserted vertically at uniform spacing over the area of placement. The distance between insertions shall be approximately 1-1/2 times the radius of action of the vibrator so that the area being vibrated will overlap the adjacent just-vibrated area by a reasonable amount. The vibrator shall penetrate rapidly to the bottom of the layer and at least (6 inches) into the preceding layer if there is such. Vibrator shall be held stationary until the concrete is consolidated and then vertically withdrawn slowly while operating. Form vibrators shall not be used unless specifically approved and unless forms are constructed to withstand their use. Vibrators shall not be used to move concrete within the forms. Slabs (4 inches) and less in thickness shall be consolidated by properly designed vibrating screeds or other approved technique. Excessive vibration of lightweight concrete resulting in segration or flotation of coarse aggregate shall be prevented. Frequency and amplitude of vibrators shall be determined in accordance with COE CRD-C 521. Grate tampers ("jitterbugs") shall not be used.

3.8.3 Cold Weather Requirements

Special protection measures, approved by the Contracting Officer, shall be used if freezing temperatures are anticipated before the expiration of the specified curing period. The ambient temperature of the air where concrete is to be placed and the temperature of surfaces to receive concrete shall be not less than (40 degrees F.) The temperature of the concrete when

placed shall be not less than (50 degrees F) nor more than (75 degrees F.) Heating of the mixing water or aggregates will be required to regulate the concrete placing temperature. Materials entering the mixer shall be free from ice, snow, or frozen lumps. Salt, chemicals or other materials shall not be incorporated in the concrete to prevent freezing. Upon written approval, an accelerating admixture conforming to ASTM C 494, Type C or E may be used, provided it contains no calcium chloride. Calcium chloride shall not be used.

3.8.4 Hot Weather Requirements

When the ambient temperature during concrete placing is expected to exceed (85 degrees F), the concrete shall be placed and finished with procedures previously submitted and as specified herein. The concrete temperature at time of delivery to the forms shall not exceed the temperature shown in the table below when measured in accordance with ASTM C 1064. Cooling of the mixing water or aggregates or placing concrete in the cooler part of the day may be required to obtain an adequate placing temperature. A retarder may be used, as approved, to facilitate placing and finishing. Steel forms and reinforcements shall be cooled as approved prior to concrete placement when steel temperatures are greater than (120 degrees F). Conveying and placing equipment shall be cooled if necessary to maintain proper concrete-placing temperature.

Maximum Allowable Concrete Placing Temperature

Relative Humidity, Percent, During Time of Concrete Placement	Maximum Allowable Concrete Temperature Degrees
Greater than 60	(90 F)
40-60	(85 F)
Less than 40	(80 F)

3.8.5 Prevention of Plastic Shrinkage Cracking

During hot weather with low humidity, and particularly with appreciable wind, as well as interior placements when space heaters produce low humidity, the Contractor shall be alert to the tendency for plastic shrinkage cracks to develop and shall institute measures to prevent this. Particular care shall be taken if plastic shrinkage cracking is potentially imminent and especially if it has developed during a previous placement. Periods of high potential for plastic shrinkage cracking can be anticipated by use of Fig. 2.1.5 of ACI 305R. In addition the concrete placement shall be further protected by erecting shades and windbreaks and by applying fog sprays of water, sprinkling, ponding or wet covering. Plastic shrinkage cracks that occur shall be filled by injection of epoxy resin as directed, after the concrete hardens. Plastic shrinkage cracks shall never be troweled over or filled with slurry.

3.8.6 Not Used.

3.8.7 Placing Concrete in Congested Areas

Special care shall be used to ensure complete filling of the forms, elimination of all voids, and complete consolidation of the concrete when placing concrete in areas congested with reinforcing bars, embedded items,

waterstops and other tight spacing. An appropriate concrete mixture shall be used, and the nominal maximum size of aggregate (NMSA) shall meet the specified criteria when evaluated for the congested area. Vibrators with heads of a size appropriate for the clearances available shall be used, and the consolidation operation shall be closely supervised to ensure complete and thorough consolidation at all points. Where necessary, splices of reinforcing bars shall be alternated to reduce congestion. Where two mats of closely spaced reinforcing are required, the bars in each mat shall be placed in matching alignment to reduce congestion. Reinforcing bars may be temporarily crowded to one side during concrete placement provided they are returned to exact required location before concrete placement and consolidation are completed.

3.8.8 Placing Flowable Concrete

If a plasticizing admixture conforming to ASTM C 1017 is used or if a Type F or G high range water reducing admixture is permitted to increase the slump, the concrete shall meet all requirements of paragraph GENERAL REQUIREMENTS in PART 1. Extreme care shall be used in conveying and placing the concrete to avoid segregation. Consolidation and finishing shall meet all requirements of paragraphs Placing Concrete, Finishing Formed Surfaces, and Finishing Unformed Surfaces. No relaxation of requirements to accommodate flowable concrete will be permitted.

3.9 JOINTS

Joints shall be located and constructed as indicated or approved. Joints not indicated on the drawings shall be located and constructed to minimize the impact on the strength of the structure. In general, such joints shall be located near the middle of the spans of supported slabs, beams, and girders unless a beam intersects a girder at this point, in which case the joint in the girder shall be offset a distance equal to twice the width of the beam. Joints in walls and columns shall be at the underside of floors, slabs, beams, or girders and at the tops of footings or floor slabs, unless otherwise approved. Joints shall be perpendicular to the main reinforcement. All reinforcement shall be continued across joints; except that reinforcement or other fixed metal items shall not be continuous through expansion joints, or through construction or contraction joints in slabs on grade. Reinforcement shall be (2 inches) clear from each jointunless noted otherwise on drawings. Except where otherwise indicated, construction joints between interior slabs on grade and vertical surfaces shall consist of (30 pound) asphalt-saturated felt, extending for the full depth of the slab. The perimeters of the slabs shall be free of fins, rough edges, spalling, or other unsightly appearance. Reservoir for sealant for construction and contraction joints in slabs shall be formed to the dimensions shown on the drawings by sawing sawable inserts, or by sawing to widen the top portion of sawed joints. Joints to be sealed shall be cleaned and sealed as indicated and in accordance with Section 07900 JOINT SEALING.

3.9.1 Construction Joints

For concrete other than slabs on grade, construction joints shall be located so that the unit of operation does not exceed (60 feet). Concrete shall be placed continuously so that each unit is monolithic in construction. Fresh concrete shall not be placed against adjacent hardened concrete until it is at least 24 hours old. Construction joints shall be located as indicated or approved. Where concrete work is interrupted by weather, end of work shift or other similar type of delay, location and

type of construction joint shall be subject to approval of the Contracting Officer. Unless otherwise indicated reinforcing steel shall extend through construction joints. Construction joints in slabs on grade shall be keyed or doweled as shown and shall be located at control joint location shown on drawings. Concrete columns, walls, or piers shall be in place at least 2 hours, or until the concrete begins to lose its plasticity, before placing concrete for beams, girders, or slabs thereon. Where horizontal construction joints in walls or columns are required, a strip of (1 inch) square-edge lumber, bevelled and oiled to facilitate removal, shall be tacked to the inside of the forms at the construction joint. Concrete shall be placed to a point (1 inch) above the underside of the strip. The strip shall be removed 1 hour after the concrete has been placed, and any irregularities in the joint line shall be leveled off with a wood float, and all laitance shall be removed. Prior to placing additional concrete, horizontal construction joints shall be prepared as specified in paragraph Previously Placed Concrete.

3.9.2 Contraction Joints in Slabs on Grade

Contraction joints shall be located and detailed as shown on the drawings. Contraction Joints shall be produced by forming a weakened plane in the concrete slab by use of rigid inserts impressed in the concrete during placing operations or sawing a continuous slot with a concrete saw. Regardless of method used to produce the weakened plane, it shall be 1/4 the depth of the slab thickness and between (1/8 and 3/16 inch) wide. For saw-cut joints, cutting shall be timed properly with the set of the concrete. Cutting shall be started as soon as the concrete has hardened sufficiently to prevent ravelling of the edges of the saw cut. Cutting shall be completed before shrinkage stresses become sufficient to produce cracking. Reservoir for joint sealant shall be formed as previously specified.

3.9.3 Expansion Joints

Installation of expansion joints and sealing of these joints shall conform to the requirements of Section 03150 EXPANSION JOINTS, CONTRACTION JOINTS, AND WATERSTOPS and Section 07900 JOINT SEALING.

3.9.4 Not Used

3.9.5 Dowels and Tie Bars

Dowels and tie bars shall be installed at the locations shown on the drawings and to the details shown, using materials and procedures specified in Section 03200 CONCRETE REINFORCEMENT and herein. Conventional smooth "paving" dowels shall be installed in slabs using approved methods to hold the dowel in place during concreting within a maximum alignment tolerance of (1/8 inch in 12 inches). "Structural" type deformed bar dowels, or tie bars, shall be installed to meet the specified tolerances. Care shall be taken during placing adjacent to and around dowels and tie bars to ensure there is no displacement of the dowel or tie bar and that the concrete completely embeds the dowel or tie bar and is thoroughly consolidated.

3.10 FINISHING FORMED SURFACES

Forms, form materials, and form construction are specified in Section 03101 STRUCTURAL CONCRETE FORMWORK. Finishing of formed surfaces shall be as specified herein. Unless another type of architectural or special finish is specified, surfaces shall be left with the texture imparted by the forms

except that defective surfaces shall be repaired. Unless painting of surfaces is required, uniform color of the concrete shall be maintained by use of only one mixture without changes in materials or proportions for any structure or portion of structure that requires a Class B finish. Except for major defects, as defined hereinafter, surface defects shall be repaired as specified herein within 24 hours after forms are removed. Repairs of the so-called "plaster-type" will not be permitted in any location. Tolerances of formed surfaces shall conform to the requirements of ACI 117/117R. These tolerances apply to the finished concrete surface, not to the forms themselves; forms shall be set true to line and grade. Form tie holes requiring repair and other defects whose depth is at least as great as their surface diameter shall be repaired as specified in paragraph Damp-Pack Mortar Repair. Defects whose surface diameter is greater than their depth shall be repaired as specified in paragraph Repair of Major Defects. Repairs shall be finished flush with adjacent surfaces and with the same surface texture. The cement used for all repairs shall be a blend of job cement with white cement proportioned so that the final color after curing and aging will be the same as the adjacent concrete. Concrete with excessive honeycomb, or other defects which affect the strength of the member, will be rejected. Repairs shall be demonstrated to be acceptable and free from cracks or loose or drummy areas at the completion of the contract and, for Class B Finishes, shall be inconspicuous. Repairs not meeting these requirements will be rejected and shall be replaced.

3.10.1 Class B Finish

Class B finish is required where concrete is exposed to view. Fins, ravelings, and loose material shall be removed, all surface defects over (1/2 inch) in diameter or more than (1/2 inch) deep, shall be repaired and, except as otherwise indicated or as specified in Section 03101 STRUCTURAL CONCRETE FORMWORK, holes left by removal of form ties shall be reamed and filled. Defects more than (1/2 inch) in diameter shall be cut back to sound concrete, but in all cases at least (1 inch) deep. The Contractor shall prepare a sample panel for approval before commencing repair, showing that the surface texture and color match will be attained.

3.10.2 Class D Finish

Class D finish is required for concrete not exposed to view. Fins, ravelings, and loose material shall be removed, and, except as otherwise indicated or as specified in Section 03101 STRUCTURAL CONCRETE FORMWORK, holes left by removal of form ties shall be reamed and filled. Honeycomb and other defects more than (1/2 inch) deep or more than (2 inches) in diameter shall be repaired. Defects more than (2 inches) in diameter shall be cut back to sound concrete, but in all cases at least (1 inch) deep.

3.10.3 Not Used

3.11 REPAIRS

3.11.1 Damp-Pack Mortar Repair

Form tie holes requiring repair and other defects whose depth is at least as great as their surface diameter but not over (4 inches) shall be repaired by the damp-pack mortar method. Form tie holes shall be reamed and other similar defects shall be cut out to sound concrete. The void shall then be thoroughly cleaned, thoroughly wetted, brush-coated with a

thin coat of neat cement grout and filled with mortar. Mortar shall be a stiff mix of 1 part portland cement to 2 parts fine aggregate passing the (No. 16) mesh sieve, and minimum amount of water. Only sufficient water shall be used to produce a mortar which, when used, will stick together on being molded into a ball by a slight pressure of the hands and will not exude water but will leave the hands damp. Mortar shall be mixed and allowed to stand for 30 to 45 minutes before use with remixing performed immediately prior to use. Mortar shall be thoroughly tamped in place in thin layers using a hammer and hardwood block. Holes passing entirely through walls shall be completely filled from the inside face by forcing mortar through to the outside face. All holes shall be packed full. Damp-pack repairs shall be moist cured for at least 48 hours.

3.11.2 Repair of Major Defects

Major defects will be considered to be those more than (1/2 inch) deep or, for Class B finishes, more than (1/2 inch) in diameter and, for Class D finishes, more than (2 inches) in diameter. Also included are any defects of any kind whose depth is over (4 inches) or whose surface diameter is greater than their depth. Major defects shall be repaired as specified below.

3.11.2.1 Surface Application of Mortar Repair

Defective concrete shall be removed, and removal shall extend into completely sound concrete. Approved equipment and procedures which will not cause cracking or microcracking of the sound concrete shall be used. If reinforcement is encountered, concrete shall be removed so as to expose the reinforcement for at least (2 inches) on all sides. All such defective areas greater than (12 square inches) shall be outlined by saw cuts at least (1 inch) deep. Defective areas less than (12 square inches) shall be outlined by a (1 inch) deep cut with a core drill in lieu of sawing. All saw cuts shall be straight lines in a rectangular pattern in line with the formwork panels. After concrete removal, the surface shall be thoroughly cleaned by high pressure washing to remove all loose material. Surfaces shall be kept continually saturated for the first 12 of the 24 hours immediately before placing mortar and shall be damp but not wet at the time of commencing mortar placement. The Contractor, at his option, may use either hand-placed mortar or mortar placed with a mortar gun. If hand-placed mortar is used, the edges of the cut shall be perpendicular to the surface of the concrete. The prepared area shall be brush-coated with a thin coat of neat cement grout. The repair shall then be made using a stiff mortar, preshrunk by allowing the mixed mortar to stand for 30 to 45 minutes and then remixed, thoroughly tamped into place in thin layers. If hand-placed mortar is used, the Contractor shall test each repair area for drumminess by firm tapping with a hammer and shall inspect for cracks, both in the presence of the Contracting Officer's representative, immediately before completion of the contract, and shall replace any showing drumminess or cracking. If mortar placed with a mortar gun is used, the gun shall be a small compressed air-operated gun to which the mortar is slowly hand fed and which applies the mortar to the surface as a high-pressure stream, as approved. Repairs made using shotcrete equipment will not be accepted. The mortar used shall be the same mortar as specified for damp-pack mortar repair. If gun-placed mortar is used, the edges of the cut shall be beveled toward the center at a slope of 1:1. All surface applied mortar repairs shall be continuously moist cured for at least 7 days. Moist curing shall consist of several layers of saturated burlap applied to the surface immediately after placement is complete and covered with polyethylene sheeting, all held closely in place by a sheet of

plywood or similar material rigidly braced against it. Burlap shall be kept continually wet.

3.11.2.2 Repair of Deep and Large Defects

Deep and large defects will be those that are more than (6 inches) deep and also have an average diameter at the surface more than (18 inches) or that are otherwise so identified by the Project Office. Such defectsshall be completely removed and replaced.

3.12 FINISHING UNFORMED SURFACES

The finish of all unformed surfaces shall meet the requirements of paragraph Tolerances in PART 1, when tested as specified herein.

3.12.1 General

The ambient temperature of spaces adjacent to unformed surfaces being finished and of the base on which concrete will be placed shall be not less than (50 degrees F). In hot weather all requirements of paragraphs Hot Weather Requirements and Prevention of Plastic Shrinkage Cracking shall be met. Unformed surfaces that are not to be covered by additional concrete or backfill shall have a float finish, with additional finishing as specified below, and shall be true to the elevation shown on the drawings. Surfaces to receive additional concrete or backfill shall be brought to the elevation shown on the drawings, properly consolidated, and left true and regular. Unless otherwise shown on the drawings, exterior surfaces shall be sloped for drainage, as directed. Where drains are provided, interior floors shall be evenly sloped to the drains. Joints shall be carefully made with a jointing or edging tool. The finished surfaces shall be protected from stains or abrasions. Grate tampers or "jitterbugs" shall not be used for any surfaces. The dusting of surfaces with dry cement or other materials or the addition of any water during finishing shall not be permitted. If bleedwater is present prior to finishing, the excess water shall be carefully dragged off or removed by absorption with porous materials such as burlap. During finishing operations, extreme care shall be taken to prevent over finishing or working water into the surface; this can cause "crazing" (surface shrinkage cracks which appear after hardening) of the surface. Any slabs with surfaces which exhibit significant crazing shall be removed and replaced. During finishing operations, surfaces shall be checked with a 3 m (10 foot) straightedge, applied in both directions at regular intervals while the concrete is still plastic, to detect high or low areas.

3.12.2 Rough Slab Finish

As a first finishing operation for unformed surfaces , the surface shall receive a rough slab finish prepared as follows. The concrete shall be uniformly placed across the slab area, consolidated as previously specified, and then screeded with straightedge strikeoffs immediately after consolidation to bring the surface to the required finish level with no coarse aggregate visible. Side forms and screed rails shall be provided, rigidly supported, and set to exact line and grade. Allowable tolerances for finished surfaces apply only to the hardened concrete, not to forms or screed rails. Forms and screed rails shall be set true to line and grade. "Wet screeds" shall not be used.

3.12.3 Floated Finish

Slabs to receive more than a rough slab finish shall next be given a wood float finish. The screeding shall be followed immediately by darbying or bull floating before bleeding water is present, to bring the surface to a true, even plane. Then, after the concrete has stiffened so that it will withstand a man's weight without imprint of more than (1/4 inch) and the water sheen has disappeared, it shall be floated to a true and even plane free of ridges. Floating shall be performed by use of suitable hand floats or power driven equipment. Sufficient pressure shall be used on the floats to bring a film of moisture to the surface. Hand floats shall be made of wood, magnesium, or aluminum. Lightweight concrete or concrete that exhibits stickiness shall be floated with a magnesium float. Care shall be taken to prevent over-finishing or incorporating water into the surface.

3.12.4 Troweled Finish

All floor slabs and topping slabs shall be given a trowel finish. After floating is complete and after the surface moisture has disappeared, unformed surfaces shall be steel-troweled to a smooth, even, dense finish, free from blemishes including trowel marks. In lieu of hand finishing, an approved power finishing machine may be used in accordance with the directions of the machine manufacturer. Additional trowelings shall be performed, either by hand or machine until the surface has been troweled 3 times, with waiting period between each. Care shall be taken to prevent blistering and if such occurs, troweling shall immediately be stopped and operations and surfaces corrected. A final hard steel troweling shall be done by hand, with the trowel tipped, and using hard pressure, when the surface is at a point that the trowel will produce a ringing sound. The finished surface shall be thoroughly consolidated and shall be essentially free of trowel marks and be uniform in texture and appearance. The concrete mixture used for troweled finished areas shall be adjusted, if necessary, in order to provide sufficient fines (cementitious material and fine sand) to finish properly.

3.12.5 Not Used

3.12.6 Non-Slip Finish

Non-slip floors shall be constructed in accordance with the following subparagraphs.

3.12.6.1 Broomed

All exterior flatwork shall be given a broomed finish. After floating, the surface shall be lightly steel troweled, and then carefully scored by pulling a push-type broom across the surface. Brooming shall be transverse to traffic or at right angles to the slope of the slab. After the end of the curing period, the surface shall be vigorously broomed with a coarse fiber broom to remove all loose or semi-detached particles.

3.13 Not Used

3.14 Not Used

3.15 CURING AND PROTECTION

3.15.1 General

Concrete shall be cured by one of the following approved methods for the period of time given below:

Concrete with Type III cement	3 days
All other concrete	7 days

Immediately after placement, concrete shall be protected from premature drying, extremes in temperatures, rapid temperature change, mechanical injury and damage from rain and flowing water for the duration of the curing period. Air and forms in contact with concrete shall be maintained at a temperature above (50 degrees F) for the first 3 days and at a temperature above (32 degrees F) for the remainder of the specified curing period. Exhaust fumes from combustion heating units shall be vented to the outside of the enclosure, and heaters and ducts shall be placed and directed so as not to cause areas of overheating and drying of concrete surfaces or to create fire hazards. Materials and equipment needed for adequate curing and protection shall be available and at the site prior to placing concrete. No fire or excessive heat, including welding, shall be permitted near or in direct contact with the concrete at any time. Except as otherwise permitted by paragraph Membrane Forming Curing Compounds, moist curing shall be provided for any areas to receive floor hardener, any paint or other applied coating, or to which other concrete is to be bonded. Except for plastic coated burlap, impervious sheeting alone shall not be used for curing.

3.15.2 Moist Curing

Concrete to be moist-cured shall be maintained continuously wet for the entire curing period, commencing immediately after finishing. If water or curing materials used stain or discolor concrete surfaces which are to be permanently exposed, the concrete surfaces shall be cleaned as approved. When wooden forms are left in place during curing, they shall be kept wet at all times. If steel forms are used in hot weather, nonsupporting vertical forms shall be broken loose from the concrete soon after the concrete hardens and curing water continually applied in this void. If the forms are removed before the end of the curing period, curing shall be carried out as on unformed surfaces, using suitable materials. Surfaces shall be cured by ponding, by continuous sprinkling, by continuously saturated burlap or cotton mats, or by continuously saturated plastic coated burlap. Burlap and mats shall be clean and free from any contamination and shall be completely saturated before being placed on the concrete. The Contractor shall have an approved work system to ensure that moist curing is continuous 24 hours per day.

3.15.3 Membrane Forming Curing Compounds

Interior concrete surfaces may be cured with a nonpigmented curing compound containing a fugitive dye in lieu of moist curing. Membrane curing compound shall not be used on surfaces that are to receive any subsequent treatment depending on adhesion or bonding to the concrete, including surfaces to which a smooth finish is to be applied or other concrete to be bonded. However, a styrene acrylate or chlorinated rubber compound meeting ASTM C 309, Class B requirements, may be used for surfaces which are to be painted or are to receive bituminous roofing or waterproofing. The curing compound selected shall be compatible with any subsequent paint, roofing, waterproofing or flooring specified. Membrane curing compound shall not be used on surfaces that are maintained at curing temperatures with free steam. Curing compound shall be applied to formed surfaces immediately after the forms are removed and prior to any patching or other surface treatment except the cleaning of loose sand, mortar, and debris from the surface. All surfaces shall be thoroughly moistened with water. Curing

compound shall be applied to slab surfaces as soon as the bleeding water has disappeared, with the tops of joints being temporarily sealed to prevent entry of the compound and to prevent moisture loss during the curing period. The curing compound shall be applied in a two-coat continuous operation by approved motorized power-spraying equipment operating at a minimum pressure of (75 psi), at a uniform coverage of not more than (400 square feet per gallon) for each coat, and the second coat shall be applied perpendicular to the first coat. Concrete surfaces which have been subjected to rainfall within 3 hours after curing compound has been applied shall be resprayed by the method and at the coverage specified. Surfaces on which clear compound is used shall be shaded from direct rays of the sun for the first 3 days. Surfaces coated with curing compound shall be kept free of foot and vehicular traffic, and from other sources of abrasion and contamination during the curing period.

3.15.4 Impervious Sheeting

Floor slabs to be covered by subsequent finishes may be cured using impervious sheet. However, except for plastic coated burlap, impervious sheeting alone shall not be used for curing. Impervious-sheet curing shall only be used on horizontal or nearly horizontal surfaces. Surfaces shall be thoroughly wetted and be completely covered with the sheeting. Sheeting shall be at least (18 inches) wider than the concrete surface to be covered. Covering shall be laid with light-colored side up. Covering shall be lapped not less than (12 inches) and securely weighted down or shall be lapped not less than (4 inches) and taped to form a continuous cover with completely closed joints. The sheet shall be weighted to prevent displacement so that it remains in contact with the concrete during the specified length of curing. Coverings shall be folded down over exposed edges of slabs and secured by approved means. Sheets shall be immediately repaired or replaced if tears or holes appear during the curing period.

3.15.5 Ponding or Immersion

Concrete shall be continually immersed throughout the curing period. Water shall not be more than (20 degrees F) less than the temperature of the concrete.

3.15.6 Cold Weather Curing and Protection

When the daily ambient low temperature is less than (32 degrees F) the temperature of the concrete shall be maintained above (40 degrees F) for the first seven days after placing. During the period of protection removal, the air temperature adjacent to the concrete surfaces shall be controlled so that concrete near the surface will not be subjected to a temperature differential of more than (25 degrees F) as determined by suitable temperature measuring devices furnished by the Government, as required, and installed adjacent to the concrete surface and (2 inches) inside the surface of the concrete. The installation of the thermometers shall be made by the Contractor as directed.

3.16 SETTING BASE PLATES AND BEARING PLATES

After being properly positioned, column base plates, bearing plates for beams and similar structural members, and machinery and equipment base plates shall be set to the proper line and elevation with damp-pack bedding mortar, except where nonshrink grout is indicated. The thickness of the mortar or grout shall be approximately 1/24 the width of the plate, but not

less than (3/4 inch) unless shown otherwise on drawings. Concrete and metal surfaces in contact with grout shall be clean and free of oil and grease, and concrete surfaces in contact with grout shall be damp and free of laitance when grout is placed. Nonshrink grout shall be used as shown on drawings.

3.16.1 Damp-Pack Bedding Mortar

Damp-pack bedding mortar shall consist of 1 part cement and 2-1/2 parts fine aggregate having water content such that a mass of mortar tightly squeezed in the hand will retain its shape but will crumble when disturbed. The space between the top of the concrete and bottom of the bearing plate or base shall be packed with the bedding mortar by tamping or ramming with a bar or rod until it is completely filled.

3.16.2 Nonshrink Grout

Nonshrink grout shall be a ready-mixed material requiring only the addition of water. Water content shall be the minimum that will provide a flowable mixture and completely fill the space to be grouted without segregation, bleeding, or reduction of strength.

3.16.2.1 Mixing and Placing of Nonshrink Grout

Mixing and placing shall be in conformance with the material manufacturer's instructions and as specified therein. Ingredients shall be thoroughly dry-mixed before adding water. After adding water, the batch shall be mixed for 3 minutes. Batches shall be of size to allow continuous placement of freshly mixed grout. Grout not used within 30 minutes after mixing shall be discarded. The space between the top of the concrete or machinery-bearing surface and the plate shall be filled solid with the grout. Forms shall be of wood or other equally suitable material for completely retaining the grout on all sides and on top and shall be removed after the grout has set. The placed grout shall be carefully worked by rodding or other means to eliminate voids; however, overworking and breakdown of the initial set shall be avoided. Grout shall not be retempered or subjected to vibration from any source. Where clearances are unusually small, placement shall be under pressure with a grout pump. Temperature of the grout, and of surfaces receiving the grout, shall be maintained at (65 to 85 degrees F) until after setting.

3.16.2.2 Treatment of Exposed Surfaces

For metal-oxidizing nonshrink grout, exposed surfaces shall be cut back (1 inch) and immediately covered with a parge coat of mortar consisting of 1 part portland cement and 2-1/2 parts fine aggregate by weight, with sufficient water to make a plastic mixture. The parge coat shall have a smooth finish. For other mortars or grouts, exposed surfaces shall have a smooth-dense finish and be left untreated. Curing shall comply with paragraph CURING AND PROTECTION.

3.17 TESTING AND INSPECTION FOR CONTRACTOR QUALITY CONTROL

The Contractor shall perform the inspection and tests described below and, based upon the results of these inspections and tests, shall take the action required and shall submit specified reports. When, in the opinion of the Contracting Officer, the concreting operation is out of control, concrete placement shall cease and the operation shall be corrected. The laboratory performing the tests shall be onsite and shall conform with ASTM

C 1077. Materials may be subjected to check testing by the Government from samples obtained at the manufacturer, at transfer points, or at the project site. The Government will inspect the laboratory, equipment, and test procedures prior to start of concreting operations and at their discretionthereafter for conformance with ASTM C 1077.

3.17.1 Grading and Corrective Action

3.17.1.1 Fine Aggregate

At least once during each shift when the concrete plant is operating, there shall be one sieve analysis and fineness modulus determination in accordance with ASTM C 136 and COE CRD-C 104 for the fine aggregate or for each fine aggregate if it is batched in more than one size or classification. The location at which samples are taken may be selected by the Contractor as the most advantageous for control. However, the Contractor is responsible for delivering fine aggregate to the mixer within specification limits. When the amount passing on any sieve is outside the specification limits, the fine aggregate shall be immediately resampled and retested. If there is another failure on any sieve, the fact shall immediately reported to the Contracting Officer, concreting shall be stopped, and immediate steps taken to correct the grading.

3.17.1.2 Coarse Aggregate

At least once during each shift in which the concrete plant is operating, there shall be a sieve analysis in accordance with ASTM C 136 for each size of coarse aggregate. The location at which samples are taken may be selected by the Contractor as the most advantageous for production control. However, the Contractor shall be responsible for delivering the aggregate to the mixer within specification limits. A test record of samples of aggregate taken at the same locations shall show the results of the current test as well as the average results of the five most recent tests including the current test. The Contractor may adopt limits for control coarser than the specification limits for samples taken other than as delivered to the mixer to allow for degradation during handling. When the amount passing any sieve is outside the specification limits, the coarse aggregate shall be immediately resampled and retested. If the second sample fails on any sieve, that fact shall be reported to the Contracting Officer. Where two consecutive averages of 5 tests are outside specification limits, the operation shall be considered out of control and shall be reported to the Contracting Officer. Concreting shall be stopped and immediate steps shall be taken to correct the grading.

3.17.2 Quality of Aggregates

Thirty days prior to the start of concrete placement, the Contractor shall perform all tests for aggregate quality required by ASTM C 33. In addition, after the start of concrete placement, the Contractor shall perform tests for aggregate quality at least every three months, and when the source of aggregate or aggregate quality changes. Samples tested after the start of concrete placement shall be taken immediately prior to entering the concrete mixer.

3.17.3 Scales, Batching and Recording

The accuracy of the scales shall be checked by test weights prior to start of concrete operations and at least once every three months. Such tests shall also be made as directed whenever there are variations in properties

of the fresh concrete that could result from batching errors. Once a week the accuracy of each batching and recording device shall be checked during a weighing operation by noting and recording the required weight, recorded weight, and the actual weight batched. At the same time, the Contractor shall test and ensure that the devices for dispensing admixtures are operating properly and accurately. When either the weighing accuracy or batching accuracy does not comply with specification requirements, the plant shall not be operated until necessary adjustments or repairs have been made. Discrepancies in recording accuracies shall be corrected immediately.

3.17.4 Batch-Plant Control

The measurement of concrete materials including cementitious materials, each size of aggregate, water, and admixtures shall be continuously controlled. The aggregate weights and amount of added water shall be adjusted as necessary to compensate for free moisture in the aggregates. The amount of air-entraining agent shall be adjusted to control air content within specified limits. A report shall be prepared indicating type and source of cement used, type and source of pozzolan or slag used, amount and source of admixtures used, aggregate source, the required aggregate and water weights per (cubic yard), amount of water as free moisture in each size of aggregate, and the batch aggregate and water weights per (cubic yard) for each class of concrete batched during each day's plant operation.

3.17.5 Concrete Mixture

a. Air Content Testing. Air content tests shall be made when test specimens are fabricated. In addition, at least two tests for air content shall be made on randomly selected batches of each separate concrete mixture produced during each 8-hour period of concrete production. Additional tests shall be made when excessive variation in workability is reported by the placing foreman or Government inspector. Tests shall be made in accordance with ASTM C 231 for normal weight concrete and ASTM C 173 for lightweight concrete. Test results shall be plotted on control charts which shall at all times be readily available to the Government and shall be submitted weekly. Copies of the current control charts shall be kept in the field by testing crews and results plotted as tests are made. When a single test result reaches either the upper or lower action limit, a second test shall immediately be made. The results of the two tests shall be averaged and this average used as the air content of the batch to plot on both the air content and the control chart for range, and for determining need for any remedial action. The result of each test, or average as noted in the previous sentence, shall be plotted on a separate control chart for each mixture on which an "average line" is set at the midpoint of the specified air content range from paragraph Air Entrainment. An upper warning limit and a lower warning limit line shall be set 1.0 percentage point above and below the average line, respectively. An upper action limit and a lower action limit line shall be set 1.5 percentage points above and below the average line, respectively. The range between each two consecutive tests shall be plotted on a secondary control chart for range where an upper warning limit is set at 2.0 percentage points and an upper action limit is set at 3.0 percentage points. Samples for air content may be taken at the mixer, however, the Contractor is responsible for delivering the concrete to the placement site at the stipulated air content. If

the Contractor's materials or transportation methods cause air content loss between the mixer and the placement, correlation samples shall be taken at the placement site as required by the Contracting Officer, and the air content at the mixer controlled as directed.

b. Air Content Corrective Action. Whenever points on the control chart for percent air reach either warning limit, an adjustment shall immediately be made in the amount of air-entraining admixture batched. As soon as practical after each adjustment, another test shall be made to verify the result of the adjustment. Whenever a point on the secondary control chart for range reaches the warning limit, the admixture dispenser shall be recalibrated to ensure that it is operating accurately and with good reproducibility. Whenever a point on either control chart reaches an action limit line, the air content shall be considered out of control and the concreting operation shall immediately be halted until the air content is under control. Additional air content tests shall be made when concreting is restarted.

c. Slump Testing. In addition to slump tests which shall be made when test specimens are fabricated, at least four slump tests shall be made on randomly selected batches in accordance with ASTM C 143 for each separate concrete mixture produced during each 8-hour or less period of concrete production each day. Also, additional tests shall be made when excessive variation in workability is reported by the placing foreman or Government inspector. Test results shall be plotted on control charts which shall at all times be readily available to the Government and shall be submitted weekly. Copies of the current control charts shall be kept in the field by testing crews and results plotted as tests are made. When a single slump test reaches or goes beyond either the upper or lower action limit, a second test shall immediately be made. The results of the two tests shall be averaged and this average used as the slump of the batch to plot on both the control charts for slump and the chart for range, and for determining need for any remedial action. Limits shall be set on separate control charts for slump for each type of mixture. The upper warning limit shall be set at (1/2 inch) below the maximum allowable slump specified in paragraph Slump in PART 1 for each type of concrete and an upper action limit line and lower action limit line shall be set at the maximum and minimum allowable slumps, respectively, as specified in the same paragraph. The range between each consecutive slump test for each type of mixture shall be plotted on a single control chart for range on which an upper action limit is set at (2 inches). Samples for slump shall be taken at the mixer. However, the Contractor is responsible for delivering the concrete to the placement site at the stipulated slump. If the Contractor's materials or transportation methods cause slump loss between the mixer and the placement, correlation samples shall be taken at the placement site as required by the Contracting Officer, and the slump at the mixer controlled as directed.

d. Slump Corrective Action. Whenever points on the control charts for slump reach the upper warning limit, an adjustment shall immediately be made in the batch weights of water and fine aggregate. The adjustments are to be made so that the total water content does not exceed that amount allowed by the maximum w/c

ratio specified, based on aggregates which are in a saturated surface dry condition. When a single slump reaches the upper or lower action limit, no further concrete shall be delivered to the placing site until proper adjustments have been made. Immediately after each adjustment, another test shall be made to verify the correctness of the adjustment. Whenever two consecutive individual slump tests, made during a period when there was no adjustment of batch weights, produce a point on the control chart for range at or above the upper action limit, the concreting operation shall immediately be halted, and the Contractor shall take appropriate steps to bring the slump under control. Additional slump tests shall be made as directed.

e. Temperature. The temperature of the concrete shall be measured when compressive strength specimens are fabricated. Measurement shall be in accordance with ASTM C 1064. The temperature shall be reported along with the compressive strength data.

f. Strength Specimens. At least one set of test specimens shall be made, for compressive or flexural strength as appropriate, on each different concrete mixture placed during the day for each (500 cubic yards) or portion thereof of that concrete mixture placed each day. Additional sets of test specimens shall be made, as directed by the Contracting Officer, when the mixture proportions are changed or when low strengths have been detected. A truly random (not haphazard) sampling plan shall be developed by the Contractor and approved by the Contracting Officer prior to the start of construction. The plan shall assure that sampling is done in a completely random and unbiased manner. A set of test specimens for concrete with a 28-day specified strength per paragraph Strength Requirements in PART 1 shall consist of four specimens, two to be tested at 7 days and two at 28 days. Test specimens shall be molded and cured in accordance with ASTM C 31 and tested in accordance with ASTM C 39 for test cylinders and ASTM C 78 for test beams. Results of all strength tests shall be reported immediately to the Contracting Officer. Quality control charts shall be kept for individual strength "tests", ("test" as defined in paragraph Strength Requirements in PART 1) moving average of last 3 "tests" for strength, and moving average for range for the last 3 "tests" for each mixture. The charts shall be similar to those found in ACI 214.3R.

3.17.6 Inspection Before Placing

Foundations, construction joints, forms, and embedded items shall be inspected by the Contractor in sufficient time prior to each concrete placement in order to certify to the Contracting Officer that they are ready to receive concrete. The results of each inspection shall be reported in writing.

3.17.7 Placing

The placing foreman shall supervise placing operations, shall determine that the correct quality of concrete or grout is placed in each location as specified and as directed by the Contracting Officer, and shall be responsible for measuring and recording concrete temperatures and ambient temperature hourly during placing operations, weather conditions, time of placement, volume placed, and method of placement. The placing foreman shall not permit batching and placing to begin until it has been verified

that an adequate number of vibrators in working order and with competent operators are available. Placing shall not be continued if any pile of concrete is inadequately consolidated. If any batch of concrete fails to meet the temperature requirements, immediate steps shall be taken to improve temperature controls.

3.17.8 Vibrators

The frequency and amplitude of each vibrator shall be determined in accordance with COE CRD-C 521 prior to initial use and at least once a month when concrete is being placed. Additional tests shall be made as directed when a vibrator does not appear to be adequately consolidating the concrete. The frequency shall be determined while the vibrator is operating in concrete with the tachometer being held against the upper end of the vibrator head while almost submerged and just before the vibrator is withdrawn from the concrete. The amplitude shall be determined with the head vibrating in air. Two measurements shall be taken, one near the tip and another near the upper end of the vibrator head, and these results averaged. The make, model, type, and size of the vibrator and frequency and amplitude results shall be reported in writing. Any vibrator not meeting the requirements of paragraph Consolidation, shall be immediately removed from service and repaired or replaced.

3.17.9 Curing Inspection

a. Moist Curing Inspections. At least once each shift, and not less than twice per day on both work and non-work days, an inspection shall be made of all areas subject to moist curing. The surface moisture condition shall be noted and recorded.

b. Moist Curing Corrective Action. When a daily inspection report lists an area of inadequate curing, immediate corrective action shall be taken, and the required curing period for those areas shall be extended by 1 day.

c. Membrane Curing Inspection. No curing compound shall be applied until the Contractor has verified that the compound is properly mixed and ready for spraying. At the end of each operation, the Contractor shall estimate the quantity of compound used by measurement of the container and the area of concrete surface covered, shall compute the rate of coverage in (square feet per gallon), and shall note whether or not coverage is uniform.

d. Membrane Curing Corrective Action. When the coverage rate of the curing compound is less than that specified or when the coverage is not uniform, the entire surface shall be sprayed again.

e. Sheet Curing Inspection. At least once each shift and once per day on non-work days, an inspection shall be made of all areas being cured using impervious sheets. The condition of the covering and the tightness of the laps and tapes shall be noted and recorded.

f. Sheet Curing Corrective Action. When a daily inspection report lists any tears, holes, or laps or joints that are not completely closed, the tears and holes shall promptly be repaired or the sheets replaced, the joints closed, and the required curing period for those areas shall be extended by 1 day.

3.17.10 Cold-Weather Protection

At least once each shift and once per day on non-work days, an inspection shall be made of all areas subject to cold-weather protection. Any deficiencies shall be noted, corrected, and reported.

3.17.11 Mixer Uniformity

a. Stationary Mixers. Prior to the start of concrete placing and once every 6 months when concrete is being placed, or once for every (75,000 cubic yards) of concrete placed, whichever results in the shortest time interval, uniformity of concrete mixing shall be determined in accordance with ASTM C 94.

b. Truck Mixers. Prior to the start of concrete placing and at least once every 6 months when concrete is being placed, uniformity of concrete mixing shall be determined in accordance with ASTM C 94. The truck mixers shall be selected randomly for testing. When satisfactory performance is found in one truck mixer, the performance of mixers of substantially the same design and condition of the blades may be regarded as satisfactory.

c. Mixer Uniformity Corrective Action. When a mixer fails to meet mixer uniformity requirements, either the mixing time shall be increased, batching sequence changed, batch size reduced, or adjustments shall be made to the mixer until compliance is achieved.

3.17.12 Reports

All results of tests or inspections conducted shall be reported informally as they are completed and in writing daily. A weekly report shall be prepared for the updating of control charts covering the entire period from the start of the construction season through the current week. During periods of cold-weather protection, reports of pertinent temperatures shall be made daily. These requirements do not relieve the Contractor of the obligation to report certain failures immediately as required in preceding paragraphs. Such reports of failures and the action taken shall be confirmed in writing in the routine reports. The Contracting Officer has the right to examine all contractor quality control records.

-- End of Section --

SECTION TABLE OF CONTENTS

DIVISION 03 - CONCRETE

SECTION 03410

PRECAST/PRESTRESSED CONCRETE FLOOR AND ROOF UNITS

05/98

PART 1 GENERAL

1.1 REFERENCES
1.2 GENERAL REQUIREMENTS
1.2.1 Calculations
1.3 DESIGN
1.4 SUBMITTALS
1.5 HANDLING AND STORAGE

PART 2 PRODUCTS

2.1 FABRICATION
2.2 TESTS

PART 3 EXECUTION

3.1 ERECTION
3.2 CONCRETE TOPPING

-- End of Section Table of Contents --

SECTION 03410

PRECAST/PRESTRESSED CONCRETE FLOOR AND ROOF UNITS
05/98

PART 1 GENERAL

1.1 REFERENCES

The publications listed below form a part of this specification to the extent referenced. The publications are referred to in the text by basic designation only.

AMERICAN WELDING SOCIETY (AWS)

AWS D1.1	(1996) Structural Welding Code - Steel

PRECAST/PRESTRESSED CONCRETE INSTITUTE (PCI)

PCI Mnl-116S	(1985) Manual for Quality Control for Plants and Production of Precast and Prestressed Concrete Products
PCI Mnl-120	(1992) PCI Design Handbook - Precast and Prestressed Concrete

1.2 GENERAL REQUIREMENTS

Precast/prestressed units shall be produced under plant-controlled conditions conforming to PCI Mnl-116S by a firm certified under the PCI Plant Certification Program and specializing in providing precast/prestressed concrete floor and roof units and related services.

1.2.1 Calculations

Design calculations for members and connections not shown in the contract drawings shall be made by a registered professional engineer experienced in the design of precast-prestressed concrete.

1.3 DESIGN

Design of units shall be performed by structural analysis in accordance with ACI 318/318R or PCI Mnl-120 whichever is customary with the fabricator. Structural analysis shall include evaluations of the effects of connections, holes, discontinuities, concentrated loads, and joints. Units shall be designed for the load conditions and spans indicated and any additional loads imposed by openings; work of other trades; concrete topping indicated; and all loading and restraining conditions from fabrication, handling, and erection. The design shall compensate for the weight of the additional topping required by the camber in order to achieve the minimum topping thickness used in the design.

1.4 SUBMITTALS

Government approval is required for submittals with a "GA" designation;

submittals having an "FIO" designation are for information only. The following shall be submitted in accordance with Section 01330 SUBMITTAL PROCEDURES:

SD-01 Data

Floor and Roof Units; FIO.

Complete design analysis and load charts signed by a professional engineer and in booklet form for the units to be furnished. Analysis shall include mixture proportion; concrete strength; stress calculations; complete camber calculation showing initial camber, estimated long term camber, and anticipated long term camber and deflection. Design analysis shall indicate which code the design was based on.

SD-04 Drawings

Floor and Roof Units; GA1.

Detail drawings shall consist of erection instructions and the following as applicable:

a. Anchorage for work of other trades.

b. Anchorage to supporting construction, if required by the design.

c. Headers for openings where additional structural work is required.

d. Joints between units and between units and other construction.

e. Reinforcing including prestressing steel details.

f. Minimum concrete compressive strengths at initial prestress and 28 days, initial prestress to be applied, and minimum release strength.

g. Shoring, unless structural computations are submitted showing that allowable concrete stresses during the work will not be exceeded when shoring is not used.

h. Layout plan and member identification marks.

1.5 HANDLING AND STORAGE

Units shall be cured prior to delivery to the jobsite. Units shall be stored off the ground and protected from soilage, marring, damage, or overload. Stacked members shall be separated by battens across the full width at bearing points.

PART 2 PRODUCTS

2.1 FABRICATION

Fabrication of the units shall be in accordance with the requirements of PCI Mnl-116S. Units shall be made available for inspection by the Contracting Officer at the manufacturer's plant. Shape of units shall be hollow-core slabs as indicated. Unit spans shall be as shown. Units shall be fabricated within the dimensional tolerances given in PCI Mnl-116S. Inserts, anchor bolts, bearing plates, and other embedded items shall be

located as required or indicated. Where required, units shall be marked to facilitate sequential erection. Openings for mechanical and utility systems and for architectural purpose shall be as shown. Prestressing eccentricity and force applied shall be adjusted to the extent possible so that the camber provided is the minimum amount needed to produce an approximate level slab after dead loads are applied. Surfaces that will be concealed from view shall be free of surface holes over (1/2 inch) in diameter. Surfaces to receive subsequent applications other than painting shall be suitable for the purpose intended and free of any coatings that would interfere with adhesion or bond. Surfaces that will be painted or exposed to view shall be smooth, free of form marks, and shall have surface blemishes filled and finished to match adjoining concrete in color and texture.

2.2 TESTS

Tests, as required by PCI Mnl-116S, shall be performed by an independent testing laboratory or in the manufacturer's approved laboratory if the manufacturer has a PCI certified plant with proof of current certification.

PART 3 EXECUTION

3.1 ERECTION

Erection shall be in accordance with the approved detail drawings. Field welding shall be in accordance with AWS D1.1. Installation of equipment required by other trades shall be accomplished as the work progresses if required by design. Field-cut openings for utilities penetrations will not be permitted unless recommended by the manufacturer and approved by the Contracting Officer. Bearing surfaces shall be level and free from irregularities. Irregularities in masonry bearing surfaces shall be leveled as recommended by the manufacturer or with a stiff cement grout. Grout shall be allowed to harden before installing the units. Units shall be installed at right angles to bearings, drawn up tight without forcing or distortion, and with sides plumb. Slab ends shall be aligned. Underside of slabs shall present true ceiling surface when the ceiling is exposed to view. The keyways between units and other spaces shall be cleaned and filled solid with grout. Grout that may have seeped through to surfaces in spaces below shall be removed before hardening. Joints in ceilings that will be exposed to view or painted shall be caulked as specified in Section 07900 JOINT SEALING. Erected units shall be temporarily covered until finish roofing is applied.

3.2 CONCRETE TOPPING

Concrete topping reinforced with welded wire fabric shall be applied to tops of units continuous over the entire span. Welded wire fabric of the size indicated shall be as specified in Section 03200 CONCRETE REINFORCEMENT. Tops of units shall be clean and free of any material that would reduce adhesion or bond. The concrete topping shall be a minimum of (2 inches) thick of (3500 psi) minimum compressive strength at 28 days. Concrete materials, quality, placing, curing, and finishing shall be as specified in Section 03300 CAST-IN-PLACE STRUCTURAL CONCRETE.

-- End of Section --

SECTION TABLE OF CONTENTS

DIVISION 03 - CONCRETE

SECTION 03413

PRECAST ARCHITECTURAL CONCRETE

05/98

PART 1 GENERAL

1.1 REFERENCES
1.2 GENERAL REQUIREMENTS
1.3 DESIGN
1.3.1 Standards and Loads
1.3.2 Connections
1.3.3 Concrete Strength
1.3.4 Concrete Proportion
1.3.5 Calculations
1.4 SUBMITTALS
1.5 STORAGE AND INSPECTION AT MANUFACTURER'S PLANT
1.6 HANDLING AND STORAGE

PART 2 PRODUCTS

2.1 MATERIALS
2.1.1 Aggregates
2.1.2 Reinforcing Steel
2.1.3 Prestressing Strands
2.1.4 Tie Wire
2.1.5 Inserts
2.1.6 Plates, Angles, Anchors and Embedments
2.1.7 Form Release Agent
2.1.8 Admixtures
2.2 PRECAST CONCRETE UNITS
2.2.1 Formwork
2.2.2 Reinforcement
2.2.3 Embedded Accessories
2.2.4 Stripping
2.2.5 Identification
2.2.6 Finishes
2.2.6.1 Exposed Surfaces
2.2.6.2 Other Surfaces
2.2.7 WEEP HOLES

PART 3 EXECUTION

3.1 ERECTION
3.2 JOINT SEALING
3.3 CLEANING
3.4 PROTECTION OF WORK
3.5 DEFECTIVE WORK

-- End of Section Table of Contents --

SECTION 03413

PRECAST ARCHITECTURAL CONCRETE
05/98

PART 1 GENERAL

1.1 REFERENCES

The publications listed below form a part of this specification to the extent referenced. The publications are referred to in the text by basic designation only.

ACI INTERNATIONAL (ACI)

ACI 211.1	(1991) Standard Practice for Selecting Proportions for Normal, Heavyweight, and Mass Concrete
ACI 211.2	(1998) Standard Practice for Selecting Proportions for Structural Lightweight Concrete
ACI Detailing Mnl	(1994) ACI Detailing Manual: Section Details and Detailing of Concrete Reinforcement
ACI 318/318R	(1995) Building Code Requirements for Structural Concrete and Commentary

AMERICAN SOCIETY FOR TESTING AND MATERIALS (ASTM)

ASTM A 416/A 416M	(1997) Steel Strand, Uncoated Seven-Wire for Prestressed Concrete
ASTM C 494	(1998) Chemical Admixtures for Concrete
ASTM C 1017	(1997) Chemical Admixtures for Use in Producing Flowing Concrete

AMERICAN WELDING SOCIETY (AWS)

AWS D1.1	(1998) Structured Welding Code - Steel

PRECAST/PRESTRESSED CONCRETE INSTITUTE (PCI)

PCI Mnl-116S	(1985) Manual for Quality Control for Plants and Production of Precast and Prestressed Concrete Products
PCI Mnl-117	(1996) Manual for Quality Control for Plants and Production of Architectural

Precast Concrete Products

PCI Mnl-122 (1989) Architectural Precast Concrete

1.2 GENERAL REQUIREMENTS

Precast concrete units shall be designed and fabricated by an experienced and acceptable precast concrete manufacturer certified under the PCI Plant Certification Program. The manufacturer shall have been regularly and continuously engaged in the manufacture of precast concrete work similar to that indicated on the drawings for at least 3 years. Precast work shall be coordinated with the work of other trades.

1.3 DESIGN

1.3.1 Standards and Loads

Precast unit design shall conform to (ACI 318/318R) and PCI Mnl-122. Design loads for precast concrete shall be as indicated on the drawings. A differential temperature of (160 degrees F), between interior and exterior faces of the units, shall be considered in the design. Stresses due to restrained volume change caused by shrinkage and temperature differential, handling, transportation and erection shall be accounted for in the design.

1.3.2 Connections

Connection of units to other members, or to other units shall be of the type and configuration indicated. The design and sizing of connections for all design loads shall be by the Contractor.

1.3.3 Concrete Strength

Precast concrete units shall have a 28-day compressive strength of (5000 psi).

1.3.4 Concrete Proportion

Selection of proportions for concrete shall be based on the methodology presented in ACI 211.1 for normal weight concrete and ACI 211.2 for lightweight concrete. The concrete proportion shall be developed using the same type and brand of cement, the same type and gradation of aggregates, and the same type and brand of admixture that will be used in the manufacture of precast concrete units for the project. Calcium chloride shall not be used in precast concrete and admixtures containing chloride ions, nitrates, or other substances that are corrosive shall not be used in prestressed concrete.

1.3.5 Calculations

Calculations for design of members and connections shall be made by a professional engineer experienced in the design of precast architectural concrete. Calculation shall include the analysis of member for lifting stresses and the sizing of the lifting inserts.

1.4 SUBMITTALS

Government approval is required for submittals with a "GA" designation; submittals having an "FIO" designation are for information only. The following shall be submitted in accordance with Section 01330 SUBMITTAL

PROCEDURES:

SD-01 Data

Calculations; FIO.

Design calculations, prior to the manufacture of any precast architectural concrete units for the project.

Mix Design; FIO.

A statement giving the maximum nominal coarse aggregate size, the proportions of all ingredients and the type and amount of any admixtures that will be used in the manufacture of each strength and type of concrete, prior to commencing operations. The statement shall be accompanied by test results from an approved testing laboratory, certifying that the proportions selected will produce concrete of the properties required. No substitutions shall be made without additional tests to verify that the concrete properties are satisfactory.

SD-04 Drawings

Architectural Concrete System; GA1.

Detail drawings showing details in accordance with ACI Detailing Mnl and (ACI 318/318R), including installation details. Detail drawings shall indicate separate identification marks for each different precast unit, location of units in the work, elevations, fabrication details, welding details, reinforcement, connections, dimensions, interface with adjacent members, blocking points for units stored at the precast concrete plant or at the jobsite, lifting points and special handling instructions in sufficient detail to cover manufacture, handling, and erection.

SD-14 Samples

Precast Concrete Units; GA1.

Two (12 by 12 by 2 inch) samples of each type of precast unit finish required for the project. Samples shall show matrix color, surface color, surface texture, and panel back finish.

SD-18 Records

Manufacturer's Qualifications; FIO.

A statement giving the qualifications of the precast concrete manufacturer and of the installers, prior to commencing operations.

1.5 STORAGE AND INSPECTION AT MANUFACTURER'S PLANT

Precast units temporarily stored at the manufacturer's plant shall be protected from damage in accordance with PCI Mnl-117 and PCI Mnl-122. Immediately prior to shipment to the jobsite, all precast concrete units shall be inspected for quality to insure all precast units conform to the requirements specified. Inspection for quality shall include, but shall not necessarily be limited to, the following elements: color, texture, dimensional tolerances, chipping, cracking, staining, warping and honeycombing. All defective precast concrete units shall be replaced or repaired as approved.

1.6 HANDLING AND STORAGE

Precast units shall be delivered to the site in accordance with delivery schedule to avoid excessive build-up of units in storage at the site. Upon delivery to the jobsite all precast units shall be inspected for quality as specified above. If the precast units cannot be unloaded and placed directly into the work, they shall be stored on site, off the ground and protected from weather, marring, or overload. Precast units shall be handled in accordance with manufacturer's instructions.

PART 2 PRODUCTS

2.1 MATERIALS

Except as otherwise specified, material shall conform to Section 03300 CAST-IN-PLACE STRUCTURAL CONCRETE and Section 03200 CONCRETE REINFORCEMENT.

2.1.1 Aggregates

Aggregates shall be manufacturer's standard aggregate for mix design.

2.1.2 Reinforcing Steel

Reinforcing steel shall be galvanized if clearance to an exterior face is (1 inch) or less.

2.1.3 Prestressing Strands

Prestressing strands shall conform to ASTM A 416/A 416M.

2.1.4 Tie Wire

Tie wire shall be soft monel or 18-8 stainless steel.

2.1.5 Inserts

Inserts shall be manufacturer's standard, suited for the application.

2.1.6 Plates, Angles, Anchors and Embedments

Material shall be as specified in PCI Mnl-117. Steel items, other than stainless, shall be hot-dip galvanized. Steel items embedded in concrete, shall be either stainless steel or hot dip galvanized steel. Steel anchors shall be stainless steel where indicated on drawings.

2.1.7 Form Release Agent

Release agent shall be manufacturer's standard nonstaining type.

2.1.8 Admixtures

Admixtures shall conform to ASTM C 494. Plasticizing admixture, if used, shall conform to ASTM C 1017.

2.2 PRECAST CONCRETE UNITS

Precast concrete units shall be manufactured and cured in accordance with the applicable provisions of PCI Mnl-116S and PCI Mnl-117. Units shall be

manufactured within the allowable tolerances given in PCI Mnl-116S, and PCI Mnl-122.

2.2.1 Formwork

Forms shall be steel of adequate thickness, braced, stiffened, anchored and aligned to produce precast architectural concrete units within required dimensional tolerances. Forms shall be sufficiently rigid to provide dimensional stability during handling and concrete placement and consolidation. Fiberglass-reinforced plastic, plastic coated wood, elastomeric or other nonabsorptive material shall be used for making tight joints and rustication pieces.

2.2.2 Reinforcement

Fabrication and placement of reinforcement shall conform to the details shown on the approved detail drawings and PCI Mnl-117.

2.2.3 Embedded Accessories

Anchors, inserts, lifting devices, and other accessories which are to be embedded in the precast units shall be furnished and installed in accordance with the approved detail drawings. Embedded items shall be accurately positioned in their designed location, and shall have sufficient anchorage and embedment to satisfy design requirements.

2.2.4 Stripping

Precast concrete units shall not be removed from forms until units develop sufficient strength to safely strip the formwork and to remove the precast concrete units from the forms to prevent damage to the units from overstress or chipping.

2.2.5 Identification

Each precast concrete unit shall be marked to correspond to the identification marks for each different precast unit shown on the detail drawings.

2.2.6 Finishes

2.2.6.1 Exposed Surfaces

Surfaces of precast units exposed to view or surfaces indicated to be finished shall be finished as follows: Smooth with light acid etched surface. Color shall be as described in Section 09915.

2.2.6.2 Other Surfaces

Surfaces of precast units not exposed to view or not otherwise indicated to be finished shall be finished in accordance with Section 03300 CAST-IN-PLACE STRUCTURAL CONCRETE.

2.2.7 WEEP HOLES

At precast panels which extend below grade and where the panel is over 2133mm (7'-0" x 7'-0") high, provide shop drilled, 9mm (3/8")diameter weep holes at 609mm (24") O.C. along the width of the panel. The weep holes are to be located at a point in the panel which will match the finished floor

elevation of the building.

PART 3 EXECUTION

3.1 ERECTION

Precast units shall be erected in accordance with the detail drawings and without damage to other units or to adjacent members. Units shall be set true to alignment and level, with joints properly spaced and aligned both vertically and horizontally. Erection tolerances shall be in accordance with the requirements of PCI Mnl-117 and PCI Mnl-122. As units are being erected, shims and wedges shall be placed as required to maintain correct alignment. After final attachment, precast units shall be grouted as shown. After erection, welds and abraded surfaces of steel shall be cleaned and touched-up with a zinc-rich paint. Welds shall be made by a certified welder in accordance with the manufacturer's erection drawings. Pickup points, boxouts, inserts, and similar items shall be finished to match adjacent areas after erection. Erection of precast units shall be supervised and performed by workmen skilled in this type of work. Welding and the qualifications of welders shall be in accordance with AWS D1.1.

3.2 JOINT SEALING

Joint sealing shall be as specified in Section 07900 JOINT SEALING.

3.3 CLEANING

Not sooner than 72 hours after joints are sealed, faces and other exposed surfaces of precast concrete discolored during erection shall be cleaned to remove dirt and stains by dry scrubbing with a stiff fiber brush, wetting the surface and vigorous scrubbing of the finish with a stiff fiber brush followed by additional washing, or by chemical cleaning compounds such as detergents or other commercial cleaners. Commercial cleaners shall be used in accordance with the manufacturer's recommendations. Cleaning procedure shall be performed on a designated test area and shall be approved prior to proceeding with cleaning work. Discolorations which cannot be removed by these procedures, will be considered defective work. Cleaning work shall be done when temperature and humidity permit surfaces to dry rapidly. Adjacent surfaces shall not be damaged during cleaning operations.

3.4 PROTECTION OF WORK

Precast units shall be protected against damage from subsequent operations.

3.5 DEFECTIVE WORK

Precast concrete units damaged during erection shall be repaired as soon after occurrence as possible or replaced, as directed, using approved procedures. All repairs to precast concrete units shall match the adjacent surfaces in color and texture and shall be as approved. Unless otherwise approved, repair procedures shall conform to PCI Mnl-117.

-- End of Section --

SECTION TABLE OF CONTENTS

DIVISION 04 - MASONRY

SECTION 04200

MASONRY

07/92

PART 1 GENERAL

1.1 REFERENCES
1.2 SUBMITTALS
1.3 SAMPLE MASONRY PANELS
1.4 DELIVERY, HANDLING, AND STORAGE
1.4.1 Masonry Units
1.4.2 Reinforcement, Anchors, and Ties
1.4.3 Cementitious Materials, Sand and Aggregates
1.5 SPECIAL INSPECTION

PART 2 PRODUCTS

2.1 GENERAL REQUIREMENTS
2.2 CLAY OR SHALE BRICK
2.2.1 Clay or Shale Brick
2.3 CONCRETE BRICK
2.4 CONCRETE MASONRY UNITS (CMU)
2.4.1 Aggregates
2.4.2 Kinds and Shapes
2.4.3 Fire-Rated CMU
2.5 Not Used
2.6 Not Used.
2.7 Not Used.
2.8 PRECAST CONCRETE ITEMS
2.9 STONE ITEMS
2.9.1 Not Used
2.9.2 Not Used
2.10 MORTAR
2.10.1 Admixtures
2.10.2 Mortar Color
2.11 GROUT
2.11.1 Admixtures
2.11.2 Grout Barriers
2.12 ANCHORS, TIES, AND BAR POSITIONERS
2.12.1 Wire Mesh Ties
2.12.2 Wall Ties
2.12.3 Not Used
2.12.4 Adjustable Anchors
2.12.5 Bar Positioners
2.13 JOINT REINFORCEMENT
2.14 REINFORCING STEEL BARS AND RODS
2.15 CONTROL JOINT KEYS
2.16 EXPANSION-JOINT MATERIALS
2.17 INSULATION
2.17.1 Rigid Board-Type Insulation for Cavity Walls

2.17.1.1 Insulation Thickness and Air Space
2.17.1.2 Aged R-Value
2.17.1.3 Recovered Material
2.17.2 Insulation Adhesive
2.18 FLASHING
2.19 WEEP HOLES

PART 3 EXECUTION

3.1 ENVIRONMENTAL REQUIREMENTS
3.1.1 Hot Weather Installation
3.1.2 Cold Weather Installation
3.1.2.1 Preparation
3.1.2.2 Completed Masonry and Masonry Not Being Worked On
3.2 LAYING MASONRY UNITS
3.2.1 Surface Preparation
3.2.2 Forms and Shores
3.2.3 Concrete Masonry Units
3.2.4 Clay or Shale Brick Units
3.2.4.1 Wetting of Units
3.2.4.2 Solid Units
3.2.4.3 Hollow Units
3.2.5 Tolerances
3.2.6 Cutting and Fitting
3.2.7 Jointing
3.2.7.1 Flush Joints
3.2.7.2 Tooled Joints
3.2.7.3 Door and Window Frame Joints
3.2.8 Joint Widths
3.2.8.1 Concrete Masonry Units
3.2.8.2 Not Used
3.2.8.3 Brick
3.2.9 Embedded Items
3.2.10 Unfinished Work
3.2.11 Masonry Wall Intersections
3.2.12 Partitions
3.3 ANCHORED VENEER CONSTRUCTION
3.4 WEEP HOLES
3.5 COMPOSITE WALLS
3.6 Not Used
3.7 Not Used
3.8 Not Used
3.9 MORTAR
3.10 REINFORCING STEEL
3.10.1 Positioning Bars
3.10.2 Splices
3.11 JOINT REINFORCEMENT
3.12 PLACING GROUT
3.12.1 Vertical Grout Barriers for Fully Grouted Walls
3.12.2 Horizontal Grout Barriers
3.12.3 Grout Holes and Cleanouts
3.12.3.1 Grout Holes
3.12.3.2 Cleanouts for Hollow Unit Masonry Construction
3.12.3.3 Cleanouts for Solid Unit Masonry Construction
3.12.4 Grouting Equipment
3.12.4.1 Grout Pumps
3.12.4.2 Vibrators
3.12.5 Grout Placement
3.12.5.1 Low-Lift Method

3.12.5.2 High-Lift Method
3.13 BOND BEAMS
3.14 CONTROL JOINTS
3.15 BRICK EXPANSION JOINTS AND CONCRETE MASONRY VENEER JOINTS
3.16 SHELF ANGLES
3.17 LINTELS
3.17.1 Masonry Lintels
3.18 SILLS AND COPINGS
3.19 ANCHORAGE TO CONCRETE AND STRUCTURAL STEEL
3.19.1 Anchorage to Concrete
3.19.2 Anchorage to Structural Steel
3.20 PARGING
3.21 INSULATION
3.22 Not Used
3.23 POINTING AND CLEANING
3.23.1 Concrete Masonry Unit and Concrete Brick Surfaces
3.23.2 Clay or Shale Brick Surfaces
3.24 BEARING PLATES
3.25 PROTECTION
3.26 TEST REPORTS
3.26.1 Field Testing of Mortar
3.26.2 Field Testing of Grout
3.26.3 Efflorescence Test
3.26.4 Prism Tests

-- End of Section Table of Contents --

SECTION 04200

MASONRY
07/92

PART 1 GENERAL

1.1 REFERENCES

The publications listed below form a part of this specification to the extent referenced. The publications are referred to in the text by basic designation only.

AMERICAN SOCIETY FOR TESTING AND MATERIALS (ASTM)

ASTM A 82	(1995a) Steel Wire, Plain, for Concrete Reinforcement
ASTM A 153	(1996) Zinc Coating (Hot-Dip) on Iron and Steel Hardware
ASTM A 615/A 615M	(1996a) Deformed and Plain Billet-Steel Bars for Concrete Reinforcement
ASTM C 55	(1996a) Concrete Brick
ASTM C 67	(1996) Sampling and Testing Brick and Structural Clay Tile
ASTM C 90	(1996a) Loadbearing Concrete Masonry Units
ASTM C 91	(1996) Masonry Cement
ASTM C 140	(1996b) Sampling and Testing Concrete Masonry Units
ASTM C 216	(1995a) Facing Brick (Solid Masonry Units Made from Clay or Shale)
ASTM C 270	(1997) Mortar for Unit Masonry
ASTM C 476	(1995) Grout for Masonry
ASTM C 494	(1992) Chemical Admixtures for Concrete
ASTM C 641	(1982; R 1991) Staining Materials in Lightweight Concrete Aggregates
ASTM C 780	(1996) Preconstruction and Construction Evaluation of Mortars for Plain and Reinforced Unit Masonry
ASTM C 1019	(1989a; R 1993) Sampling and Testing Grout
ASTM C 1072	(1994) Measurement of Masonry Flexural

	Bond Strength
ASTM C 1289	(1995) Faced Rigid Cellular Polyisocyanurate Thermal Insulation Board
ASTM D 2000	(1996) Rubber Products in Automotive Applications
ASTM D 2240	(1997) Rubber Property - Durometer Hardness
ASTM D 2287	(1996) Nonrigid Vinyl Chloride Polymer and Copolymer Molding and Extrusion Compounds
ASTM E 447	(1992b) Compressive Strength of Masonry Prisms

1.2 SUBMITTALS

Government approval is required for submittals with a "GA" designation; submittals having an "FIO" designation are for information only. The following shall be submitted in accordance with Section 01330 SUBMITTAL PROCEDURES:

SD-01 Data

Brick; GA1. Insulation; FIO.
Manufacturer's descriptive data.

SD-09 Reports

Efflorescence Test; FIO. Field Testing of Mortar; FIO. Field Testing of Grout; FIO. Prism tests; FIO. Masonry Cement; FIO. Fire-rated CMU; FIO.

Test reports from an approved independent laboratory. Test reports on a previously tested material shall be certified as the same as that proposed for use in this project.

Special Inspection; GA.

Copies of masonry inspector reports.

SD-13 Certificates

Brick; FI0. Concrete Brick; FIO. Concrete Masonry Units (CMU); FIO. . Control Joint Keys; FIO. Anchors, Ties, and Bar Positioners; FIO. Expansion-Joint Materials; FIO. Joint Reinforcement; FIO. Reinforcing Steel Bars and Rods; FIO. Masonry Cement; FIO. Mortar Coloring; FIO. Insulation; FIO. Mortar Admixtures; FIO. Grout Admixtures; FIO.

Certificates of compliance stating that the materials meet the specified requirements.

Insulation; FIO.

Certificate attesting that the polyurethane or polyisocyanurate insulation furnished for the project contains recovered material, and showing an estimated percent of such recovered material.

SD-14 Samples

Stone Items; GA1. Clay or Shale Brick; GA1.

Color samples of three stretcher units and one unit for each type of special shape. Units shall show the full range of color and texture.

Portable Panel; Refer to requirements of 04220 NONBEARING MASONRY VENEER/STEEL STUD WALLS.

1.3 SAMPLE MASONRY PANELS

Refer to requirements of 04220 NONBARING MASONRY VENEER/STEEL STUD WALLS.

1.4 DELIVERY, HANDLING, AND STORAGE

Materials shall be delivered, handled, stored, and protected to avoid chipping, breakage, and contact with soil or contaminating material.

1.4.1 Masonry Units

Concrete masonry units shall be covered or protected from inclement weather and shall conform to the moisture content as specified in ASTM C 90 when delivered to the jobsite.

1.4.2 Reinforcement, Anchors, and Ties

Steel reinforcing bars, coated anchors, ties, and joint reinforcement shall be stored above the ground. Steel reinforcing bars and uncoated ties shall be free of loose mill scale and rust.

1.4.3 Cementitious Materials, Sand and Aggregates

Cementitious and other packaged materials shall be delivered in unopened containers, plainly marked and labeled with manufacturers' names and brands. Cementitious material shall be stored in dry, weathertight enclosures or be completely covered. Cement shall be handled in a manner that will prevent the inclusion of foreign materials and damage by water or dampness. Sand and aggregates shall be stored in a manner to prevent contamination or segregation.

1.5 SPECIAL INSPECTION

A qualified masonry inspector approved by the Contracting Officer shall perform inspection of the masonry work. Minimum qualifications for the masonry inspector shall be 5 years of reinforced masonry inspection experience or acceptance by a State, municipality, or other governmental body having a program of examining and certifying inspectors for reinforced masonry construction. The masonry inspector shall be present during preparation of masonry prisms, sampling and placing of masonry units, placement of reinforcement (including placement of dowels in footings and foundation walls), inspection of grout space, immediately prior to closing of cleanouts, and during grouting operations. The masonry inspector shall assure Contractor compliance with the drawings and specifications. The masonry inspector shall keep a complete record of all inspections and shall submit daily written reports to the Quality Control Supervisory Representative reporting the quality of masonry construction.

PART 2 PRODUCTS

2.1 GENERAL REQUIREMENTS

The source of materials which will affect the appearance of the finished work shall not be changed after the work has started except with Contracting Officer's approval.

2.2 CLAY OR SHALE BRICK

Notwithstanding Section 00700 CONTRACT CLAUSES FAR 52.236-5, Material and Workmanship, the face brick shall be manufactured by Endicott Brick Company in order to be fully compatible with and interface with the existing Base masonry and Phases 1 & 2 of the Lodging facility. No other product will be acceptable. The competition Advocate authorizes sole source procurement.

Color range of brick shall be in accordance with 09915 COLOR SCHEDULE and texture of brick shall be equivalent to "velour" texture and shall conform to the approved sample. Grade SW shall be used for all brickwork. Brick units shall be delivered factory-blended to provide a uniform appearance and color range in the completed wall.

2.2.1 Clay or Shale Brick

Solid clay or shale brick shall conform to ASTM C 216, Type FBS. Brick size shall be modular and the nominal size of the brick used shall be (2-1/4 inches) high, (4 inches) deep, and (8 inches) long.

2.3 CONCRETE BRICK

Concrete brick shall conform to ASTM C 55, Type I, Grade N-I. Concrete brick may be used where necessary for filling out in concrete masonry unit construction.

2.4 CONCRETE MASONRY UNITS (CMU)

Hollow and solid concrete masonry units shall conform to ASTM C 90, Type I. Cement shall have a low alkali content and be of one brand.

2.4.1 Aggregates

Lightweight aggregates and blends of lightweight and heavier aggregates in proportions used in producing the units, shall comply with the following requirements when tested for stain-producing iron compounds in accordance with ASTM C 641: by visual classification method, the iron stain deposited on the filter paper shall not exceed the "light stain" classification.

2.4.2 Kinds and Shapes

Units shall be modular in size and shall include closer, jamb, header, lintel, and bond beam units to complete the work as indicated. Units used in exposed masonry surfaces in any one building shall have a uniform fine to medium texture and a uniform color.

2.4.3 Fire-Rated CMU

Concrete masonry units used in fire-rated construction shown on the drawings shall be of minimum equivalent thickness for the fire rating indicated and the corresponding type of aggregates indicated in TABLE I. Units containing more than one of the aggregates listed in TABLE I will be rated on the aggregate requiring the greater minimum equivalent thickness

to produce the required fire rating.

TABLE I

FIRE-RATED CONCRETE MASONRY UNITS

See note (a) below

Aggregate Type	Minimum equivalent thickness inches for fire rating of: 4 hours	3 hours	2 hours
Pumice	4.7	4.0	3.0
Expanded slag	5.0	4.2	3.3
Expanded clay, shale, or slate	5.7	4.8	3.7
Limestone, scoria, cinders or unexpanded slag	5.9	5.0	4.0
Calcareous gravel	6.2	5.3	4.2
Siliceous gravel	6.7	5.7	4.5

(a) Minimum equivalent thickness shall equal net volume as determined in conformance with ASTM C 140 divided by the product of the actual length and height of the face shell of the unit in inches. Where walls are to receive plaster or be faced with brick, or otherwise form an assembly; the thickness of plaster or brick or other material in the assembly will be included in determining the equivalent thickness.

2.5 Not Used

2.6 Not Used.

2.7 Not Used.

2.8 PRECAST CONCRETE ITEMS

Precast units shall be provided in accordance with 03413 PRECAST ARCHITECTURAL CONCRETE.

2.9 STONE ITEMS

Stone shall be limestone and shall be cut to the design shown. Limestone color shall be in accordance with 09915 COLOR SCHEDULE. Stone shall have beds and joints at right angles to the face, with sharp, true arises.

2.9.1 Not Used

2.9.2 Not Used

2.9.3 Not Used

2.9.4 Exterior Stone Treads

Stone for exterior treads shall be single piece sections in thicknesses shown on Drawings. Finish shall be equivalent to "Tapestry" sandblasted finish by Mankato-Kasota Stone Company.

2.10 MORTAR

Mortar shall be Type S in accordance with the proportion specification of ASTM C 270 except Type S cement-lime mortar proportions shall be 1 part cement, 1/2 part lime and 4-1/2 parts aggregate; when masonry cement ASTM C 91 is used the maximum air content shall be limited to 12 percent and performance equal to cement-lime mortar shall be verified. Verification of masonry cement performance shall be based on ASTM C 780 and ASTM C 1072. Cement shall have a low alkali content and be of one brand. Aggregates shall be from one source.

2.10.1 Admixtures

In cold weather, a non-chloride based accelerating admixture may be used subject to approval. Accelerating admixture shall be non-corrosive, shall contain less than 0.2 percent chlorides, and shall conform to ASTM C 494, Type C.

2.10.2 Mortar Color

Mortar color mix shall be provided for use at exposed brick masonry surfaces in accordance with 09915 COLOR SCHEDULE. Mortar coloring shall not exceed 3 percent of the weight of cement for carbon black and ten percent of the weight of cement for all other pigments. Mortar coloring shall be chemically inert, of finely ground limeproof pigment, and furnished in accurately pre-measured and packaged units that can be added to a measured amount of cement.

2.11 GROUT

Grout shall conform to ASTM C 476. Cement used in grout shall have a low alkali content. Grout slump shall be between (8 and 10 inches). Grout shall be used subject to the limitations of Table III. Proportions shall not be changed and materials with different physical or chemical characteristics shall not be used in grout for the work unless additional evidence is furnished that the grout meets the specified requirements.

2.11.1 Admixtures

In cold weather, a non-chloride based accelerating admixture may be used subject to approval. Accelerating admixture shall be non-corrosive, shall contain less than 0.2 percent chlorides, and shall conform to ASTM C 494, Type C.

2.11.2 Grout Barriers

Grout barriers for vertical cores shall consist of fine mesh wire, fiberglass, or expanded metal.

2.12 ANCHORS, TIES, AND BAR POSITIONERS

Anchors and ties shall be fabricated without drips or crimps and shall be zinc-coated in accordance with ASTM A 153, Class B-2. Steel wire used for

anchors and ties shall be fabricated from steel wire conforming to ASTM A 82. Anchors and ties shall be sized to provide a minimum of (5/8 inch) mortar cover from either face. Refer to specification section 04220 NON-BEARING MASONRY VENEER/STEEL STUD WALLS for anchors at steel stud walls.

2.12.1 Wire Mesh Ties

Wire mesh for tying thick concrete masonry unit partitions to other intersecting masonry partitions shall be mesh of minimum steel wire. Minimum lengths shall be not less than (12 inches).

2.12.2 Wall Ties

Wall ties shall be rectangular-shaped or Z-shaped fabricated of diameter zinc-coated steel wire. Rectangular wall ties shall be no less than wide. Wall ties may also be of a continuous type conforming to paragraph JOINT REINFORCEMENT. Adjustable type wall ties, if approved for use, shall consist of two essentially U-shaped elements fabricated of diameter zinc-coated steel wire. Adjustable ties shall be of the double pintle to eye type and shall allow a maximum of eccentricity between each element of the tie. Play between pintle and eye opening shall be not more than . The pintle and eye elements shall be formed so that both can be in the same plane.

2.12.3 Not Used

2.12.4 Adjustable Anchors

Adjustable anchors shall be diameter steel wire, triangular-shaped. Anchors attached to steel shall be diameter steel bars placed to provide play between flexible anchors and structural steel members. Spacers shall be welded to rods and columns. Equivalent welded-on steel anchor rods or shapes standard with the flexible-anchor manufacturer may be furnished when approved. Welds shall be cleaned and given one coat of zinc-rich touch up paint.

2.12.5 Bar Positioners

Bar positioners, used to prevent displacement of reinforcing bars during the course of construction, shall be fabricated from 9 gauge steel wire or equivalent, and coated with a hot-dip galvanized finish. Not more than one wire shall cross the cell.

2.13 JOINT REINFORCEMENT

Joint reinforcement shall be factory fabricated from steel wire conforming to ASTM A 82, welded construction. Tack welding will not be acceptable in reinforcement used for wall ties. Wire shall have zinc coating conforming to ASTM A 153, Class B-2. All wires shall be a minimum of 9 gauge. Reinforcement shall be ladder type design, having one longitudinal wire in the mortar bed of each face shell for hollow units and one wire for solid units. Joint reinforcement shall be placed a minimum of (5/8 inch) cover from either face. The distance between crosswires shall not exceed . Joint reinforcement for straight runs shall be furnished in flat sections not less than long. Joint reinforcement shall be provided with factory formed corners and intersections. If approved for use, joint reinforcement may be furnished with adjustable wall tie features.

2.14 REINFORCING STEEL BARS AND RODS

Reinforcing steel bars and rods shall conform to ASTM A 615/A 615M, Grade 60.

2.15 CONTROL JOINT KEYS

Control joint keys shall be a factory fabricated solid section of natural or synthetic rubber (or combination thereof) conforming to ASTM D 2000or polyvinyl chloride conforming to ASTM D 2287. The material shall be resistant to oils and solvents. The control joint key shall be provided with a solid shear section not less than (5/8 inch) thick and (3/8 inch) thick flanges, with a tolerance of plus or minus (1/16 inch). The control joint key shall fit neatly, but without forcing, in masonry unit jamb sash grooves. The control joint key shall be flexible at a temperature of (minus 30 degrees F) after five hours exposure, and shall have a durometer hardness of not less than 70 when tested in accordance with ASTM D 2240.

2.16 EXPANSION-JOINT MATERIALS

Backer rod and sealant shall be adequate to accommodate joint compression equal to 50 percent of the width of the joint. The backer rod shall be compressible rod stock of polyethylene foam, polyurethane foam, butyl rubber foam, or other flexible, nonabsorptive material as recommended by the sealant manufacturer. Sealant shall conform to Section 07900 JOINT SEALING.

2.17 INSULATION

2.17.1 Rigid Board-Type Insulation for Cavity Walls

At locations between two wythes of masonry, rigid board-type cavity wall insulation shall be polyisocyanurate. Polyisocyanurate shall conform to ASTM C 1289, Type I, Class 2, faced with foil facers on both sides of the foam. The insulation shall be a standard product and shall be marked with not less than the manufacturer's trademark or name, the specification number, the permeance and R-values. Refer to 04220 NONBEARING MASONRY VENEER/STEEL STUD WALLS for insulation at metal stud wall locations.

2.17.1.1 Insulation Thickness and Air Space

The cavity space shall allow for a maximum insulation thickness of (2 inches), and a minimum air space of .

2.17.1.2 Aged R-Value

The insulation shall provide a minimum aged R-value of R=7.2 per 31.8 mm (1 inch) of overall thickness. The aged R-value shall be determined at in accordance with the appropriate referenced specification. The stated R-value of the insulation shall be certified by an independent testing laboratory or certified by an independent Registered Professional Engineer if tests are conducted in the manufacturer's laboratory.

2.17.1.3 Recovered Material

Insulation shall contain the highest practicable percentage of recovered material derived from solid waste (but material reused in the manufacturing process cannot be counted toward the percentage of recovered material). Where two materials have the same price and performance, the one containing the higher recovered material content shall be provided. The polyurethane

or polyisocyanurate foam shall have a minimum recovered material content of 9 percent by weight of the core material.

2.17.2 Insulation Adhesive

Insulation adhesive shall be specifically prepared to adhere the insulation to the masonry and, where applicable, to the thru-wall flashing. The adhesive shall not deleteriously affect the insulation, and shall have a record of satisfactory and proven performance for the conditions under which to be used.

2.18 FLASHING

Flashing shall be as specified in Section 07600 SHEET METALWORK, GENERAL.

2.19 WEEP HOLES

Weepholes shall be cotton sash cord of a length required to produce a 50 mm (2 inch) exposure on exterior and provide a 900 mm (18 inch) length within cavity.

PART 3 EXECUTION

3.1 ENVIRONMENTAL REQUIREMENTS

3.1.1 Hot Weather Installation

The following precautions shall be taken if masonry is erected when the ambient air temperature is more than (99 degrees F) in the shade and the relative humidity is less than 50 percent. All masonry materials shall be shaded from direct sunlight; mortar beds shall be spread no more than (4 feet) ahead of masonry; masonry units shall be set within one minute of spreading mortar; and after erection, masonry shall be protected from direct exposure to wind and sun for 48 hours.

3.1.2 Cold Weather Installation

Before erecting masonry when ambient temperature or mean daily air temperature falls below (40 degrees F), a written statement of proposed cold weather construction procedures shall be submitted for approval. The following precautions shall be taken during all cold weather erection.

3.1.2.1 Preparation

Ice or snow formed on the masonry bed shall be thawed by the application of heat. Heat shall be applied carefully until the top surface of the masonry is dry to the touch. Sections of masonry deemed frozen and damaged shall be removed before continuing construction of those sections.

a. Air Temperature (40 to 32 Degrees F). Sand or mixing water shall be heated to produce mortar temperatures between (40 degrees F and 120 degrees F).

b. Air Temperature (32 to 25 Degrees F). Sand and mixing water shall be heated to produce mortar temperatures between (40 degrees F and 120 degrees F). Temperature of mortar on boards shall be maintained above freezing.

c. Air Temperature (25 to 20 Degrees F). Sand and mixing water

shall be heated to provide mortar temperatures between (40 degrees F and 120 degrees F). Temperature of mortar on boards shall be maintained above freezing. Sources of heat shall be used on both sides of walls under construction. Windbreaks shall be employed when wind is in excess of (15 mph).

d. Air Temperature (20 Degrees F and below). Sand and mixing water shall be heated to provide mortar temperatures between (40 degrees F and 120 degrees F). Enclosure and auxiliary heat shall be provided to maintain air temperature above (32 degrees F). Temperature of units when laid shall not be less than (20 degrees F).

3.1.2.2 Completed Masonry and Masonry Not Being Worked On

a. Mean daily air temperature (40 degrees F to 32 degrees F). Masonry shall be protected from rain or snow for 24 hours by covering with weather-resistive membrane.

b. Mean daily air temperature (32 degrees F to 25 degrees F). Masonry shall be completely covered with weather-resistant membrane for 24 hours.

c. Mean Daily Air Temperature (25 Degrees F to 20 Degrees F). Masonry shall be completely covered with insulating blankets or equally protected for 24 hours.

d. Mean Daily Temperature (20 Degrees F) and Below. Masonry temperature shall be maintained above (32 degrees F) for 24 hours by enclosure and supplementary heat, by electric heating blankets, infrared heat lamps, or other approved methods.

3.2 LAYING MASONRY UNITS

Masonry units shall be laid in running bond pattern. Facing courses shall be level with back-up courses, unless the use of adjustable ties has been approved in which case the tolerances shall be plus or minus (1/2 inch). Each unit shall be adjusted to its final position while mortar is still soft and plastic. Units that have been disturbed after the mortar has stiffened shall be removed, cleaned, and relaid with fresh mortar. Air spaces, cavities, chases, expansion joints, and spaces to be grouted shall be kept free from mortar and other debris. Units used in exposed masonry surfaces shall be selected from those having the least amount of chipped edges or other imperfections detracting from the appearance of the finished work. Vertical joints shall be kept plumb. Units being laid and surfaces to receive units shall be free of water film and frost. Solid units shall be laid in a non furrowed full bed of mortar. Mortar for veneer wythes shall be beveled and sloped toward the center of the wythe from the cavity side. Units shall be shoved into place so that the vertical joints are tight. Vertical joints of brick and the vertical face shells of concrete masonry units, except where indicated at control, expansion, and isolation joints, shall be completely filled with mortar. Mortar will be permitted to protrude up to (1/2 inch) into the space or cells to be grouted. Means shall be provided to prevent mortar from dropping into the space below. In double wythe construction, the inner wythe may be brought up not more than (16 inches) ahead of the outer wythe. Collar joints shall be filled with mortar or grout during the laying of the facing wythe, and filling shall not lag the laying of the facing wythe by more than (8 inches).

3.2.1 Surface Preparation

Surfaces upon which masonry is placed shall be cleaned of laitance, dust, dirt, oil, organic matter, or other foreign materials and shall be slightly roughened to provide a surface texture with a depth of at least (1/8 inch). Sandblasting shall be used, if necessary, to remove laitance from pores and to expose the aggregate.

3.2.2 Forms and Shores

Forms and shores shall be sufficiently rigid to prevent deflections which may result in cracking or other damage to supported masonry and sufficiently tight to prevent leakage of mortar and grout. Supporting forms and shores shall not be removed in less than 10 days.

3.2.3 Concrete Masonry Units

Units in piers, pilasters, columns, starting courses on footings, solid foundation walls, lintels, and beams, and where cells are to be filled with grout shall be full bedded in mortar under both face shells and webs. Other units shall be full bedded under both face shells. Head joints shall be filled solidly with mortar for a distance in from the face of the unit not less than the thickness of the face shell. Foundation walls below grade shall be grouted solid. Jamb units shall be of the shapes and sizes to conform with wall units. Solid units may be incorporated in the masonry work where necessary to fill out at corners, gable slopes, and elsewhere as approved. Double walls shall be stiffened at wall-mounted plumbing fixtures by use of strap anchors, two above each fixture and two below each fixture, located to avoid pipe runs, and extending from center to center of the double wall. Walls and partitions shall be adequately reinforced for support of wall-hung plumbing fixtures when chair carriers are not specified.

3.2.4 Clay or Shale Brick Units

Brick facing shall be laid with the better face exposed. Brick shall be laid in running bond with each course bonded at corners, unless otherwise indicated. Molded brick shall be laid with the frog side down. Brick that is cored, recessed, or has other deformations may be used in sills, treads, soldier courses, except where deformations will be exposed to view.

3.2.4.1 Wetting of Units

Wetting of clay, shale brick, or hollow brick units having an initial rate of absorption of more than (1 gram per minute per square inch) of bed surface shall be in conformance with ASTM C 67. The method of wetting shall ensure that each unit is nearly saturated but surface dry when laid.

3.2.4.2 Solid Units

Bed, head, and collar joints shall be completely filled with mortar.

3.2.4.3 Hollow Units

Hollow units shall be laid as specified for concrete masonry units.

3.2.5 Tolerances

Masonry shall be laid plumb, true to line, with courses level. Bond

pattern shall be kept plumb throughout. Corners shall be square unless noted otherwise. Except for walls constructed of prefaced concrete masonry units, masonry shall be laid within the following tolerances (plus or minus unless otherwise noted):

3.2.6 Cutting and Fitting

Full units of the proper size shall be used wherever possible, in lieu of cut units. Cutting and fitting, including that required to accommodate the work of others, shall be done by masonry mechanics using power masonry saws. Concrete masonry units may be wet or dry cut. Wet cut units, before being placed in the work, shall be dried to the same surface-dry appearance as uncut units being laid in the wall. Cut edges shall be clean, true and sharp. Openings in the masonry shall be made carefully so that wall plates, cover plates or escutcheons required by the installation will completely conceal the openings and will have bottoms parallel with the masonry bed joints. Reinforced masonry lintels shall be provided above openings over (12 inches) wide for pipes, ducts, cable trays, and other wall penetrations, unless steel sleeves are used.

3.2.7 Jointing

Joints shall be tooled when the mortar is thumbprint hard. Horizontal joints shall be tooled last. Joints shall be brushed to remove all loose and excess mortar. Mortar joints shall be finished as follows:

3.2.7.1 Flush Joints

Joints in concealed masonry surfaces and joints at electrical outlet boxes in wet areas shall be flush cut. Flush cut joints shall be made by cutting off the mortar flush with the face of the wall. Joints in unparged masonry walls below grade shall be pointed tight. Flush joints for architectural units, such as fluted units, shall completely fill both the head and bed joints.

3.2.7.2 Tooled Joints

Joints in exposed exterior and interior masonry surfaces shall be tooled slightly concave. Joints shall be tooled with a jointer slightly larger than the joint width so that complete contact is made along the edges of the unit. Tooling shall be performed so that the mortar is compressed and the joint surface is sealed. Jointer of sufficient length shall be used to obtain a straight and true mortar joint.

3.2.7.3 Door and Window Frame Joints

On the exposed interior side of exterior frames, joints between frames and abutting masonry walls shall be raked to a depth of (3/8 inch). On the exterior side of exterior frames, joints between frames and abutting masonry walls shall be raked to a depth of (3/8 inch).

3.2.8 Joint Widths

Joint widths shall be as follows:

3.2.8.1 Concrete Masonry Units

Concrete masonry units shall have joints.

3.2.8.2 Not Used

3.2.8.3 Brick

Brick joint widths shall be the difference between the actual and nominal dimensions of the brick in either height or length. Brick expansion joint widths shall be as shown.

3.2.9 Embedded Items

Spaces around built-in items shall be filled with mortar. Openings around flush-mount electrical outlet boxes in wet locations shall be pointed with mortar. Anchors, ties, wall plugs, accessories, flashing, pipe sleeves and other items required to be built-in shall be embedded as the masonry work progresses. Anchors, ties and joint reinforcement shall be fully embedded in the mortar. Cells receiving anchor bolts and cells of the first course below bearing plates shall be filled with grout.

3.2.10 Unfinished Work

Unfinished work shall be stepped back for joining with new work. Toothing may be resorted to only when specifically approved. Loose mortar shall be removed and the exposed joints shall be thoroughly cleaned before laying new work.

3.2.11 Masonry Wall Intersections

Each course shall be masonry bonded at corners and elsewhere as shown. Masonry walls shall be anchored or tied together at corners and intersections with bond beam reinforcement and prefabricated corner or tee pieces of joint reinforcement as shown.

3.2.12 Partitions

Partitions shall be continuous from floor to underside of floor or roof deck where shown. Openings in firewalls around joists or other structural members shall be filled as indicated or approved. Where suspended ceilings on both sides of partitions are indicated, the partitions other than those to be fire-rated may be stopped approximately above the ceiling level. An isolation joint shall be placed in the intersection between partitions and structural or exterior walls as shown. Interior partitions having nominal thick units shall be tied to intersecting partitions of units, (5 inches) into partitions of units, and (7 inches) into partitions of or thicker units. Cells within vertical plane of ties shall be filled solid with grout for full height of partition or solid masonry units may be used. Interior partitions having masonry walls over thick shall be tied together with joint reinforcement. Partitions containing joint reinforcement shall be provided with prefabricated pieces at corners and intersections or partitions.

3.3 ANCHORED VENEER CONSTRUCTION

The inner and outer wythes shall be completely separated by a continuous airspace as shown on the drawings. Both the inner and the outer wythes shall be laid up together except when adjustable joint reinforcement assemblies are approved for use. When both wythes are not brought up together, through-wall flashings shall be protected from damage until they are fully enclosed in the wall. The airspace between the wythes shall be kept clear and free of mortar droppings by temporary wood strips laid on

the wall ties and carefully lifted out before placing the next row of ties. A coarse gravel or drainage material shall be placed behind the weep holes in the cavity to a minimum depth of (4 inches) of coarse aggregate or (10 inches) of drainage material to keep mortar droppings from plugging the weep holes.

3.4 WEEP HOLES

Weep holes shall be provided not more than (24 inches) on centers in mortar joints of the exterior wythe above wall flashing, over foundations, bond beams, and any other horizontal interruptions of the cavity. Weep holes shall be formed by placing short lengths of well-greased No. 10, nominal diameter, braided cotton sash cord in the mortar and withdrawing the cords after the wall has been completed. Other approved methods may be used for providing weep holes. Weep holes shall be kept free of mortar and other obstructions.

3.5 COMPOSITE WALLS

Masonry wythes shall be tied together with joint reinforcement or with unit wall ties. Facing shall be anchored to concrete backing with wire dovetail anchors set in slots built in the face of the concrete as specified in Section 03300 CAST-IN-PLACE STRUCTURAL CONCRETE. The facing wythe shall be anchored or tied to the backup at a maximum spacing of on center vertically and on center horizontally. Unit ties shall be spaced not over on centers horizontally, in courses not over apart vertically, staggered in alternate courses. Ties shall be laid not closer than (5/8 inch) to either masonry face. Ties shall not extend through control joints. Collar joints between masonry facing and masonry backup shall be filled solidly with grout.

3.6 Not Used

3.7 Not Used

3.8 Not Used

3.9 MORTAR

Mortar shall be mixed in a mechanically operated mortar mixer for at least 3 minutes, but not more than 5 minutes. Measurement of ingredients for mortar shall be by volume. Ingredients not in containers, such as sand, shall be accurately measured by the use of measuring boxes. Water shall be mixed with the dry ingredients in sufficient amount to provide a workable mixture which will adhere to the vertical surfaces of masonry units. Mortar that has stiffened because of loss of water through evaporation shall be retempered by adding water to restore the proper consistency and workability. Mortar that has reached its initial set or that has not been used within 2-1/2 hours after mixing shall be discarded.

3.10 REINFORCING STEEL

Reinforcement shall be cleaned of loose, flaky rust, scale, grease, mortar, grout, or other coating which might destroy or reduce its bond prior to placing grout. Bars with kinks or bends not shown on the drawings shall not be used. Reinforcement shall be placed prior to grouting. Unless otherwise indicated, vertical wall reinforcement shall extend to within (2 inches) of tops of walls.

3.10.1 Positioning Bars

Vertical bars shall be accurately placed within the cells at the positions indicated on the drawings. A minimum clearance of (1/2 inch) shall be maintained between the bars and masonry units. Minimum clearance between parallel bars shall be one diameter of the reinforcement. Vertical reinforcing may be held in place using bar positioners located near the ends of each bar and at intermediate intervals of not more than 192 diameters of the reinforcement. Column and pilaster ties shall be wired in position around the vertical steel. Ties shall be in contact with the vertical reinforcement and shall not be placed in horizontal bed joints.

3.10.2 Splices

Bars shall be lapped a minimum of 48 diameters of the reinforcement. Welded or mechanical connections shall develop at least 125 percent of the specified yield strength of the reinforcement.

3.11 JOINT REINFORCEMENT

Joint reinforcement shall be installed at on center or as indicated. Reinforcement shall be lapped not less than (6 inches). Prefabricated sections shall be installed at corners and wall intersections. The longitudinal wires of joint reinforcement shall be placed to provide not less than (5/8 inch) cover to either face of the unit.

3.12 PLACING GROUT

Cells containing reinforcing bars shall be filled with grout. Hollow masonry units in walls or partitions supporting plumbing, heating, or other mechanical fixtures, voids at door and window jambs, and other indicated spaces shall be filled solid with grout. Cells under lintel bearings on each side of openings shall be filled solid with grout for full height of openings. Walls below grade, lintels, and bond beams shall be filled solid with grout. Units other than open end units may require grouting each course to preclude voids in the units. Grout not in place within 1-1/2 hours after water is first added to the batch shall be discarded. Sufficient time shall be allowed between grout lifts to preclude displacement or cracking of face shells of masonry units. If blowouts, flowouts, misalignment, or cracking of face shells should occur during construction, the wall shall be torn down and rebuilt.

3.12.1 Vertical Grout Barriers for Fully Grouted Walls

Grout barriers shall be provided not more than (30 feet) apart, or as required, to limit the horizontal flow of grout for each pour.

3.12.2 Horizontal Grout Barriers

Grout barriers shall be embedded in mortar below cells of hollow units receiving grout.

3.12.3 Grout Holes and Cleanouts

3.12.3.1 Grout Holes

Grouting holes shall be provided in slabs, spandrel beams, and other in-place overhead construction. Holes shall be located over vertical reinforcing bars or as required to facilitate grout fill in bond beams.

Additional openings spaced not more than on centers shall be provided where grouting of all hollow unit masonry is indicated. Openings shall not be less than (4 inches) in diameter or (3 by 4 inches) in horizontal dimensions. Upon completion of grouting operations, grouting holes shall be plugged and finished to match surrounding surfaces.

3.12.3.2 Cleanouts for Hollow Unit Masonry Construction

Cleanout holes shall be provided at the bottom of every pour in cores containing vertical reinforcement when the height of the grout pour exceeds (5 feet). Where all cells are to be grouted, cleanout courses shall be constructed using bond beam units in an inverted position to permit cleaning of all cells. Cleanout holes shall be provided at a maximum spacing of where all cells are to be filled with grout. A new series of cleanouts shall be established if grouting operations are stopped for more than 4 hours. Cleanouts shall not be less than (3 by 4 inch) openings cut from one face shell. Manufacturer's standard cutout units may be used at the Contractor's option. Cleanout holes shall not be closed until masonry work, reinforcement, and final cleaning of the grout spaces have been completed and inspected. For walls which will be exposed to view, cleanout holes shall be closed in an approved manner to match surrounding masonry.

3.12.3.3 Cleanouts for Solid Unit Masonry Construction

Cleanouts for construction of walls consisting of a grout filled cavity between solid masonry wythes shall be provided at the bottom of every pour by omitting every other masonry unit from one wythe. A new series of cleanouts shall be established if grouting operations are stopped for more than 4 hours. Cleanout holes shall not be plugged until masonry work, reinforcement, and final cleaning of the grout spaces have been completed and inspected. For walls which will be exposed to view, cleanout holes shall be closed in an approved manner to match surrounding masonry.

3.12.4 Grouting Equipment

3.12.4.1 Grout Pumps

Pumping through aluminum tubes will not be permitted. Pumps shall be operated to produce a continuous stream of grout without air pockets, segregation, or contamination. Upon completion of each day's pumping, waste materials and debris shall be removed from the equipment, and disposed of outside the masonry.

3.12.4.2 Vibrators

Internal vibrators shall maintain a speed of not less than 5,000 impulses per minute when submerged in the grout. At least one spare vibrator shall be maintained at the site at all times. Vibrators shall be applied at uniformly spaced points not further apart than the visible effectiveness of the machine. Duration of vibration shall be limited to time necessary to produce satisfactory consolidation without causing segregation.

3.12.5 Grout Placement

Masonry shall be laid to the top of a pour before placing grout. Grout shall not be placed in two-wythe solid unit masonry cavity until mortar joints have set for at least 3 days during hot weather and 5 days during cold damp weather. Grout shall not be placed in hollow unit masonry until mortar joints have set for at least 24 hours. Grout shall be placed using

a hand bucket, concrete hopper, or grout pump to completely fill the grout spaces without segregation of the aggregates. Vibrators shall not be inserted into lower pours that are in a semi-solidified state. The height of grout pours and type of grout used shall be limited by the dimensions of grout spaces as indicated in Table III. Low-lift grout methods may be used on pours up to and including (5 feet) in height. High-lift grout methods shall be used on pours exceeding (5 feet) in height.

3.12.5.1 Low-Lift Method

Grout shall be placed at a rate that will not cause displacement of the masonry due to hydrostatic pressure of the grout. Mortar protruding more than (1/2 inch) into the grout space shall be removed before beginning the grouting operation. Grout pours (12 inches) or less in height shall be consolidated by mechanical vibration or by puddling. Grout pours over (12 inches) in height shall be consolidated by mechanical vibration and reconsolidated by mechanical vibration after initial water loss and settlement has occurred. Vibrators shall not be inserted into lower pours that are in a semi-solidified state. Low-lift grout shall be used subject to the limitations of Table III.

3.12.5.2 High-Lift Method

Mortar droppings shall be cleaned from the bottom of the grout space and from reinforcing steel. Mortar protruding more than (1/4 inch) into the grout space shall be removed by dislodging the projections with a rod or stick as the work progresses. Reinforcing, bolts, and embedded connections shall be rigidly held in position before grouting is started. CMU units shall not be pre-wetted. Grout, from the mixer to the point of deposit in the grout space shall be placed as rapidly as practical by pumping and placing methods which will prevent segregation of the mix and cause a minimum of grout splatter on reinforcing and masonry surfaces not being immediately encased in the grout lift. The individual lifts of grout shall be limited to (4 feet) in height. The first lift of grout shall be placed to a uniform height within the pour section and vibrated thoroughly to fill all voids. This first vibration shall follow immediately behind the pouring of the grout using an approved mechanical vibrator. After a waiting period sufficient to permit the grout to become plastic, but before it has taken any set, the succeeding lift shall be poured and vibrated (12 to 18 inches) into the preceding lift. If the placing of the succeeding lift is going to be delayed beyond the period of workability of the preceding, each lift shall be reconsolidated by reworking with a second vibrator as soon as the grout has taken its settlement shrinkage. The waiting, pouring, and reconsolidation steps shall be repeated until the top of the pour is reached. The top lift shall be reconsolidated after the required waiting period. The high-lift grouting of any section of wall between vertical grout barriers shall be completed to the top of a pour in one working day unless a new series of cleanout holes is established and the resulting horizontal construction joint cleaned. High-lift grout shall be used subject to the limitations in Table III.

Notes:

(1) The actual grout space or cell dimension must be larger than the sum of the following items:
a) The required minimum dimensions of total clear areas given in the table above;
b) The width of any mortar projections within the space;
c) The horizontal projections of the diameters of the horizontal reinforcing bars within a cross section of the grout space or cell.

(2) The minimum dimensions of the total clear areas shall be made up of one or more open areas, with at least one area being 3/4 inch or greater in width.

(3) For grouting spaces between masonry wythes.

(4) Where only cells of hollow masonry units containing reinforcement are grouted, the maximum height of the pour shall not exceed the distance between horizontal bond beams.

3.13 BOND BEAMS

Bond beams shall be filled with grout and reinforced as indicated on the drawings. Grout barriers shall be installed under bond beam units to retain the grout as required. Reinforcement shall be continuous, including around corners, except through control joints or expansion joints, unless otherwise indicated on the drawings. Where splices are required for continuity, reinforcement shall be lapped 48 bar diameters. A minimum clearance of (1/2 inch) shall be maintained between reinforcement and interior faces of units.

3.14 CONTROL JOINTS

Control joints shall be provided as indicated and shall be constructed by using mortar to fill the head joint in accordance with the details shown on the drawings. Sash jamb units shall have a groove near the center at end of each unit. The vertical mortar joint at control joint locations shall be continuous, including through all bond beams. This shall be accomplished by utilizing half blocks in alternating courses on each side of the joint. The control joint key shall be interrupted in courses containing continuous bond beam steel. In single wythe exterior masonry walls, the exterior control joints shall be raked to a depth of (3/4 inch); backer rod and sealant shall be installed in accordance with Section 07900 JOINT SEALING. Exposed interior control joints shall be raked to a depth of (1/4 inch). Concealed control joints shall be flush cut.

3.15 BRICK EXPANSION JOINTS AND CONCRETE MASONRY VENEER JOINTS

Brick expansion joints and concrete masonry veneer joints shall be provided and constructed as shown on the drawings. Joints shall be kept free of mortar and other debris.

3.16 SHELF ANGLES

Shelf angles shall be adjusted as required to keep the masonry level and at the proper elevation. Shelf angles shall be provided in sections not longer than (10 feet) and installed with a (1/4 inch) gap between sections. Shelf angles shall be mitered and welded at building corners with each angle not shorter than (4 feet), unless limited by wall configuration.

3.17 LINTELS

3.17.1 Masonry Lintels

Masonry lintels shall be constructed with lintel units filled solid with grout in all courses and reinforced with a minimum of two No. 4 bars in the bottom course unless otherwise indicated on the drawings. Lintel

reinforcement shall extend beyond each side of masonry opening 40 bar diameters or (24 inches), whichever is greater. Reinforcing bars shall be supported in place prior to grouting and shall be located (1/2 inch) above the bottom inside surface of the lintel unit.

3.18 SILLS AND COPINGS

Sills and copings shall be set in a full bed of mortar with faces plumb and true.

3.19 ANCHORAGE TO CONCRETE AND STRUCTURAL STEEL

3.19.1 Anchorage to Concrete

Anchorage of masonry to the face of concrete columns, beams, or walls shall be with dovetail anchors spaced not over on centers vertically and on center horizontally.

3.19.2 Anchorage to Structural Steel

Masonry shall be anchored to vertical structural steel framing with adjustable steel wire anchors spaced not over on centers vertically, and if applicable, not over on centers horizontally.

3.20 PARGING

The outside face of below-grade exterior concrete-masonry unit walls enclosing usable rooms and spaces, except crawl spaces, shall be parged with type S mortar. Parging shall not be less than (1/2 inch) thick troweled to a smooth dense surface so as to provide a continuous unbroken shield from top of footings to a line (6 inches) below adjacent finish grade, unless otherwise indicated. Parging shall be coved at junction of wall and footing. Parging shall be damp-cured for 48 hours or more before backfilling. Parging shall be protected from freezing temperatures until hardened.

3.21 INSULATION

Anchored veneer walls shall be insulated, where shown, by installing board-type insulation on the cavity side of the inner wythe. Board type insulation shall be applied directly to the masonry or thru-wall flashing with adhesive. Insulation shall be neatly fitted between obstructions without impaling of insulation on ties or anchors. The insulation shall be applied in parallel courses with vertical joints breaking midway over the course below and shall be applied in moderate contact with adjoining units without forcing, and shall be cut to fit neatly against adjoining surfaces.

3.22 Not Used

3.23 POINTING AND CLEANING

After mortar joints have attained their initial set, but prior to hardening, mortar and grout daubs or splashings shall be completely removed from masonry-unit surfaces that will be exposed or painted. Before completion of the work, defects in joints of masonry to be exposed or painted shall be raked out as necessary, filled with mortar, and tooled to match existing joints. Immediately after grout work is completed, scum and stains which have percolated through the masonry work shall be removed

using a high pressure stream of water and a stiff bristled brush. Masonry surfaces shall not be cleaned, other than removing excess surface mortar, until mortar in joints has hardened. Masonry surfaces shall be left clean, free of mortar daubs, dirt, stain, and discoloration, including scum from cleaning operations, and with tight mortar joints throughout. Metal tools and metal brushes shall not be used for cleaning.

3.23.1 Concrete Masonry Unit and Concrete Brick Surfaces

Exposed concrete masonry unit and concrete brick surfaces shall be dry-brushed at the end of each day's work and after any required pointing, using stiff-fiber bristled brushes.

3.23.2 Clay or Shale Brick Surfaces

Exposed clay or shale brick masonry surfaces shall be cleaned as necessary to obtain surfaces free of stain, dirt, mortar and grout daubs, efflorescence, and discoloration or scum from cleaning operations. After cleaning, the sample panel of similar material shall be examined for discoloration or stain as a result of cleaning. If the sample panel is discolored or stained, the method of cleaning shall be changed to assure that the masonry surfaces in the structure will not be adversely affected. The exposed masonry surfaces shall be water-soaked and then cleaned with a proprietary masonry cleaning agent specifically recommended for the color and texture by the clay products manufacturer. The solution shall be applied with stiff fiber brushes, followed immediately by thorough rinsing with clean water. Proprietary cleaning agents shall be used in conformance with the cleaning product manufacturer's printed recommendations. Efflorescence shall be removed in conformance with the brick manufacturer's recommendations.

3.24 BEARING PLATES

Bearing plates for beams, joists, joist girders and similar structural members shall be set to the proper line and elevation with damp-pack bedding mortar, except where non-shrink grout is indicated. Bedding mortar and non-shrink grout shall be as specified in Section 03300 CAST-IN-PLACE STRUCTURAL CONCRETE.

3.25 PROTECTION

Facing materials shall be protected against staining. Top of walls shall be covered with nonstaining waterproof covering or membrane when work is not in progress. Covering of the top of the unfinished walls shall continue until the wall is waterproofed with a complete roof or parapet system. Covering shall extend a minimum of (2 feet) down on each side of the wall and shall be held securely in place. Before starting or resuming, top surface of masonry in place shall be cleaned of loose mortar and foreign material.

3.26 TEST REPORTS

3.26.1 Field Testing of Mortar

At least three specimens of mortar shall be taken each day. A layer of mortar (1/2 to 5/8 inch) thick shall be spread on the masonry units and allowed to stand for one minute. The specimens shall then be prepared and tested for compressive strength in accordance with ASTM C 780.

3.26.2 Field Testing of Grout

Field sampling and testing of grout shall be in accordance with the applicable provisions of ASTM C 1019. A minimum of three specimens of grout per day shall be sampled and tested. Each specimen shall have a minimum ultimate compressive strength of (2000 psi) at 28 days.

3.26.3 Efflorescence Test

Brick which will be exposed to weathering shall be tested for efflorescence. Tests shall be scheduled far enough in advance of starting masonry work to permit retesting if necessary. Sampling and testing shall conform to the applicable provisions of ASTM C 67. Units meeting the definition of "effloresced" will be subject to rejection.

3.26.4 Prism Tests

At least one prism test sample shall be made for each 5,000 square feet of wall but not less than three such samples shall be made for any building. Three prisms shall be used in each sample. Prisms shall be tested in accordance with ASTM E 447. Seven-day tests may be used provided the relationship between the 7- and 28-day strengths of the masonry is established by the tests of the materials used. If the compressive strength of any prism falls below the specified value by more than 500 psi, steps shall be taken to assure that the load-carrying capacity of the structure is not jeopardized. If the likelihood of low-strength masonry is confirmed and computations indicate that the load-carrying capacity may have been significantly reduced, tests of cores drilled, or prisms sawed, from the area in question may be required. In such case, three specimens shall be taken for each prism test more than 500 psi below the specified value. Masonry in the area in question shall be considered structurally adequate if the average compressive strength of three specimens is equal to at least 85 percent of the specified value, and if the compressive strength of no single specimen is less than 75 percent of the specified value. Additional testing of specimens extracted from locations represented by erratic core or prism strength test results shall be permitted.

-- End of Section --

SECTION TABLE OF CONTENTS

DIVISION 04 - MASONRY

SECTION 04220

NONBEARING MASONRY VENEER/STEEL STUD WALLS

09/98

PART 1 GENERAL

1.1 REFERENCES
1.2 SUBMITTALS
1.3 SAMPLE PANEL
1.4 DELIVERY, HANDLING AND STORAGE
1.5 EFFLORESCENCE TESTS

PART 2 PRODUCTS

2.1 VENEER WYTHE
2.1.1 Clay or Shale Brick
2.2 MORTAR
2.3 JOINT REINFORCEMENT
2.4 COLD-FORMED STEEL FRAMING
2.5 INSULATION
2.5.1 Blanket Insulation
2.5.2 Insulating Sheathing
2.6 GYPSUM WALLBOARD
2.7 EXTERIOR SHEATHING
2.8 MOISTURE PROTECTION
2.8.1 Moisture Barrier
2.8.2 Vapor Retarder
2.8.3 Staples
2.8.4 Joint Tape
2.9 VENEER ANCHORS
2.9.1 Adjustable Pintle-Eye Type Wire Anchors
2.10 CONNECTIONS
2.10.1 Framing Screws, Bolts and Anchors
2.10.2 Welding
2.10.3 Veneer Anchor Screws
2.10.4 Exterior Sheathing Screws
2.11 SYNTHETIC WASHERS
2.12 EXPANSION JOINT MATERIAL
2.13 FLASHING
2.14 STEEL LINTELS AND SHELF ANGLES
2.15 CAULKING AND SEALANTS

PART 3 EXECUTION

3.1 GENERAL INSTALLATION REQUIREMENTS
3.2 STEEL STUD WALL FRAMING
3.3 STEEL SHELF ANGLES
3.4 INSULATION
3.5 GYPSUM WALLBOARD
3.6 EXTERIOR SHEATHING

3.7 MOISTURE PROTECTION
3.7.1 Moisture Barrier
3.7.2 Vapor Retarder
3.8 VENEER ANCHORS
3.9 FLASHING
3.10 MASONRY VENEER
3.10.1 Surface Preparation
3.10.2 Hot Weather Construction
3.10.3 Cold Weather Construction
3.10.4 Tolerances
3.10.5 Mixing of Mortar
3.10.6 Cutting and Fitting
3.10.7 Masonry Units
3.10.8 Mortar Joints
3.10.9 Joint Reinforcement
3.10.10 Veneer Joints
3.10.11 Weep Holes
3.10.12 Head Joint Vents
3.10.13 Discontinuous Work
3.10.14 Cleaning
3.11 BUILDING EXPANSION JOINTS

-- End of Section Table of Contents --

SECTION 04220

NONBEARING MASONRY VENEER/STEEL STUD WALLS
09/98

PART 1 GENERAL

1.1 REFERENCES

The publications listed below form a part of this specification to the extent referenced. The publications are referred to in the text by the basic designation only.

AMERICAN INSTITUTE OF STEEL CONSTRUCTION (AISC)

AISC ASD Manual	(1989) Manual of Steel Construction Allowable Stress Design

AMERICAN IRON AND STEEL INSTITUTE (AISI)

AISI-01	(1996) Cold-Formed Steel Design Manual

AMERICAN SOCIETY FOR TESTING AND MATERIALS (ASTM)

ASTM A 36/A 36M	(1997a) Carbon Structural Steel
ASTM A 82	(1997) Steel Wire, Plain, for Concrete Reinforcement
ASTM A 123/A 123M	(1997a) Zinc (Hot-Dip Galvanized) Coatings on Iron and Steel Products
ASTM A 153/A 153M	(1995) Zinc Coating (Hot-Dip) on Iron and Steel Hardware
ASTM C 67	(1996) Sampling and Testing Brick and Structural Clay Tile
ASTM C 79/C 79M	(1997) Treated Core and Nontreated Core Gypsum Sheathing Board
ASTM C 665	(1995) Mineral-Fiber Blanket Thermal Insulation for Light Frame Construction and Manufactured Housing
ASTM C 954	(1996a) Steel Drill Screws for the Application of Gypsum Panel Products or Metal Plaster Bases to Steel Studs from 0.033 in. (0.84 mm) to 0.112 in. (2.84 mm) in Thickness
ASTM D 1056	(1991) Flexible Cellular Materials - Sponge or Expanded Rubber
ASTM D 1330	(1985; R 1995) Rubber Sheet Gaskets

ASTM D 1667	(1997) Flexible Cellular Materials - Vinyl Chlorine Polymers and Copolymers (Closed-Cell Foam)
ASTM D 2103	(1997) Polyethylene Film and Sheeting

AMERICAN WELDING SOCIETY (AWS)

AWS D1.3	(1989) Structural Welding Code - Sheet Steel

1.2 SUBMITTALS

Government approval is required for submittals with a "GA" designation; submittals having an "FIO" designation are for information only. The following shall be submitted in accordance with Section 01330 SUBMITTAL PROCEDURES:

SD-01 Data

Masonry Veneer/Steel Stud Wall System: Refer to requirements of 05400 COLD-FORMED STEEL FRAMING..

SD-04 Drawings

Masonry Veneer/Steel Stud Wall System: Refer to requirements of 05400 COLD-FORMED STEEL FRAMING..

SD-13 Certificates

Brick; FIO. Insulation; FIO. Exterior Sheathing; FIO. Moisture Barrier; FIO. Vapor Barrier; FIO. Veneer Anchors; FIO.

Certificates stating that the materials meet the requirements specified. Each certificate shall be signed by an authorized certification official and shall include their organization and position and shall identify the products covered under their certifying signature.

SD-14 Samples

FIO. A portable panel, approximately (2 by 2 feet), containing approximately 24 brick facings to establish the range of color and texture, and one of each type of masonry veneer anchor used.

1.3 SAMPLE PANEL

After the material samples are approved and prior to starting masonry work, a sample masonry panel shall be built on the project site where directed. The sample panel shall be not less than (6 feet) long by (4 feet) high. The panel shall be of typical wall thickness for the construction represented. The panel shall show color range, texture, bond pattern, expansion joints, and cleaning of the masonry as required in the work. The panel shall also show cold-formed steel framing, insulation, gypsum wallboard, exterior sheathing, moisture barrier, vapor barrier, veneer anchors, joint reinforcement, steel shelf angles, flashing and weep holes. The approved sample panel shall be used as a standard of workmanship required in the actual installation. The sample panel shall be protected

from weather and construction operations and shall not be removed until the masonry veneer/steel stud wall work has been completed and accepted.

1.4 DELIVERY, HANDLING AND STORAGE

Materials shall be delivered and handled avoiding chipping, breakage, bending or other damage, and contact with soil or other contaminating materials. The masonry and cementitious products shall be stored in accordance with SECTION 04200 MASONRY. Finish of the framing members shall be maintained at all times, using an approved high zinc dust content galvanizing repair paint whenever necessary to prevent the formation of rust. Insulation, moisture barrier, and exterior sheathing shall be stored in dry, well ventilated, weather-tight areas protected from sunlight and excessive heat. Air infiltration type vapor barrier shall be stored in accordance with the manufacturer's recommendations.

1.5 EFFLORESCENCE TESTS

Efflorescence tests shall be performed by an approved commercial testing laboratory. Sampling for the tests shall be the responsibility of the Contractor. Brick shall be sampled and tested for efflorescence in accordance with ASTM C 67 and the rating shall be: "not effloresced".

PART 2 PRODUCTS

2.1 VENEER WYTHE

The source of masonry materials which will affect the appearance of the finished work shall not be changed after the work has started except with the Contracting Officer's approval.

2.1.1 Clay or Shale Brick

Clay or shale brick veneer shall be as specified in 04200 MASONRY.

2.2 MORTAR

Mortar shall be as specified in 04200 MASONRY.

2.3 JOINT REINFORCEMENT

Joint reinforcement shall be as specified in 04200 MASONRY.

2.4 COLD-FORMED STEEL FRAMING

Cold-formed framing for exterior masonry veneer steel stud wall systems shall be as specified in 05400 COLD-FORMED STEEL FRAMING. Metal framing for interior partitions are specified in Section 09250 GYPSUM WALLBOARD.

2.5 INSULATION

2.5.1 Blanket Insulation

Insulation placed between the steel studs shall be batt or blanket type mineral fiber conforming to ASTM C 665, Type I.

2.5.2 Insulating Sheathing

Insulating sheathing shall be provided in wall cavities at metal stud walls

as indicated on drawings. Insulating sheathing shall comply with ASTM C1289, Type 1, Class 2 and shall have a rigid polyiscyanurate foam core with a reinforced radiant barrier aluminum foil facer bonded to each side. The aged thermal resistance (R-value) shall be a minimum of R=8 at 24 degrees C (75 degrees F) per 31.8 mm (one inch) of thickness. Insulating sheathing shall be provided in 1200 by 2400 mm (4 by 8 foot) rigid boards and in thickness as indicated on drawings. Facers for insulating sheathing shall serve as the moisture barrier in cavity wall construction.

2.6 GYPSUM WALLBOARD

Gypsum wallboard that is installed on the interior side of the cold-formed steel framing system shall be as specified in Section 09250 GYPSUM WALLBOARD.

2.7 EXTERIOR SHEATHING

Exterior gypsum sheathing that is installed on the exterior side of the cold-formed steel framing system shall have a minimum thickness of (1/2 inch) and shall be (4 feet) wide. Gypsum sheathing shall conform to ASTM C 79/C 79M. Gypsum sheathing shall have a water-resistant gypsum core with a water-repellent paper firmly bonded to the core.

2.8 MOISTURE PROTECTION

2.8.1 Moisture Barrier

Refer to 2.5.2 Insulating Sheathing for moisture barrier.

2.8.2 Vapor Retarder

The vapor retarder shall be polyethylene film conforming to ASTM D 2103, minimum thickness.

2.8.3 Staples

Staples for attaching the moisture barrier to the exterior sheathing shall be the type and size best suited to provide a secure connection. Staples shall be made from either galvanized steel or stainless steel wire.

2.8.4 Joint Tape

Tape for sealing the joints in the vapor retarder shall be laminated tape with pressure sensitive adhesive as recommended by the manufacturer of the polyethylene film.

2.9 VENEER ANCHORS

Anchor assemblies for the attachment of the masonry veneer to the cold-formed steel framing, structural steel members, and precast concrete floor slabs shall be designed for the design loadings shown. Anchors shall transfer the design loadings from the masonry veneer to the cold-formed steel framing system or other support without exceeding the allowable stresses and deflections in the anchors. Length of anchor wires shall be such that the outermost wires lie between (1-1/4 inch) from each face of the masonry veneer. Anchors wires shall not have drips. Wires for veneer anchors shall be rectangular or triangular hoops formed from (3/16 inch) diameter steel wire conforming to ASTM A 82. Anchor assemblies including wires and anchor plates shall be hot-dip galvanized conforming to ASTM A

153/A 153M, Class B-2. The veneer anchor shall have a minimum capacity of (200 pounds). The load-displacement capacity of each veneer anchor, both in direct pull-out for tension and compression, shall be not less than or a deflection of of load in tension or compression). In the direction perpendicular to the masonry veneer, the anchor assembly shall have a maximum play of (1/16 inch).

2.9.1 Adjustable Pintle-Eye Type Wire Anchors

Adjustable pintle-eye type wall anchors shall be two piece rectangular type double pintle anchors.

2.10 CONNECTIONS

Screws, bolts and anchors shall be hot-dip galvanized in accordance with ASTM A 123/A 123M or ASTM A 153/A 153M as appropriate.

2.10.1 Framing Screws, Bolts and Anchors

Screws, bolts and anchors used in the assembly of the cold-formed steel framing system shall be as required by design of the framing system for the specified loading. Screw, bolt and anchor sizes shall be shown on the detail drawings.

2.10.2 Welding

Welded connections shall be designed and all welding shall be performed in accordance with AWS D1.3, as modified by AISI-01. Welders shall be qualified in accordance with AWS D1.3. All welds shall be cleaned and touched-up with zinc-rich paint.

2.10.3 Veneer Anchor Screws

Screws for attachment of the veneer anchors to the cold-formed steel framing members shall be stainless steel, #12 diameter, equivalent to "SX" Fastener by SFS Stadler. The length of screws shall be such that the screws penetrate the holding member by not less than (5/8 inch).

2.10.4 Exterior Sheathing Screws

Screws for attachment of gypsum sheathing to cold-formed steel framing shall conform to ASTM C 954.

2.11 SYNTHETIC WASHERS

Synthetic neoprene or rubber washers for placement between veneer anchors and the moisture barrier on the outside face of the exterior sheathing shall conform to ASTM D 1330, Grade I.

2.12 EXPANSION JOINT MATERIAL

Premolded type shall be closed-cell cellular rubber conforming to ASTM D 1056 or closed-cell vinyl or polyvinyl chloride conforming to ASTM D 1667.

2.13 FLASHING

Through-wall flashing shall conform to the requirements in Section 07600 SHEET METALWORK, GENERAL. Flashing shall be supplied in a continuous sheet extending from the exterior sheathing across the cavity and through the

masonry veneer as shown.

2.14 STEEL LINTELS AND SHELF ANGLES

Steel shapes used for lintels and shelf angles shall conform to ASTM A 36/A 36M. Lintels and shelf angles shall be provided as shown. These steel members shall be hot-dip galvanized in accordance with ASTM A 123/A 123M.

2.15 CAULKING AND SEALANTS

Caulking and sealants shall be as specified in Section 07900 JOINT SEALING.

PART 3 EXECUTION

3.1 GENERAL INSTALLATION REQUIREMENTS

Wall sections, types of construction and dimensions shall be as shown. Metal door and window frames and other special framing shall be built and anchored into the wall system as indicated.

3.2 STEEL STUD WALL FRAMING

The top track of the stud wall system shall be slip jointed to accommodate vertical deflections of the supporting members as shown on the drawings. Both flanges of all steel studs shall be securely fastened with screws to the flanges of the top and bottom tracks as shown on the drawings. All details for affixing steel studs to runners and all other sheet steel framing members along with all details necessary for anchorage of the steel stud wall system to the building structural systems shall be as shown on the shop drawings. Horizontal bridging shall be provided as necessary. Studs shall be spaced as indicated on the drawings. Coordinate stud spacing with sheathing and anchor requirements. At wall openings for doors, windows and other similar features, the framing system shall provide for the installation and anchorage of the required subframes or finish frames. Steel frames shall be securely attached through built-in anchors to the nearest stud on each side of the opening with self-drilling screws. Double studs shall be provided at both jambs of all door openings. Door frames and other built-in items shall be grouted solid.

3.3 STEEL SHELF ANGLES

Shelf angles shall be adjusted as required to keep the masonry level and at the proper elevation. Shelf angles shall be galvanized. Shelf angles shall be provided in sections not longer than (10 feet) and installed with a (1/4 inch) gap between sections. Shelf angles shall be mitered and welded at building corners with each angle not shorter than (4 feet), unless limited by wall configuration. Fabrication and erection tolerances shall be in accordance with the AISC Code of Standard Practice, as indicated in AISC ASD Manual.

3.4 INSULATION

Insulation thickness shall be as shown on the approved drawings. Installation, except as otherwise specified or shown, shall be in accordance with the manufacturer's instructions which shall be approved by the Contracting Officer. Batt or blanket insulation shall be installed between wall framing members. Rigid insulating sheathing shall be installed over exterior sheathing in accordance with the manufacturer's instructions with proper connections through the insulation to prevent the

insulation from carrying loads directly. Where electrical outlets, ducts, pipes, vents or other utility items occur, batt insulation shall be placed on the dry side of the item away from excessive humidity.

3.5 GYPSUM WALLBOARD

Gypsum wallboard shall be installed on the interior face of the cold-formed steel framing system. Installation shall be as specified in Section 09250 GYPSUM WALLBOARD except at vertical slip joints, the gypsum wallboard shall be connected to the vertical studs to prevent movement at the slip joint.

3.6 EXTERIOR SHEATHING

Sheathing shall be installed on the exterior face of the cold-formed steel framing system with self-drilling screws. Screws shall be located a minimum of (3/8 inch) from the ends and edges of sheathing panels and shall be spaced not more than (8 inches) on each supporting member except at vertical slip joints, the sheathing shall be connected to the vertical studs to prevent movement of the slip joint. Edges and ends of gypsum sheathing panels shall be butted snugly with vertical joints staggered to provide full and even support for the moisture barrier. Holes and gaps resulting from abandoned screw installations, from damage to panels, and from cutting and fitting of panels at junctures with doors, windows, foundation walls, floor slabs and other similar locations shall be filled with exterior rubber-base caulk.

3.7 MOISTURE PROTECTION

3.7.1 Moisture Barrier

The foil-faced insulating sheathing shall be installed per manufacturer's instructions on the outer face of the exterior gypsum sheathing with the joints running vertical. A moisture barrier shall be created by sealing each vertical joint with an aluminum foil tape recommended by manufacturer to provide a water-tight moisture barrier.

3.7.2 Vapor Retarder

A vapor retarder shall be installed between the steel studs and the gypsum wall board. The vapor retarder shall be installed in accordance with the manufacturer's recommendations to form a complete retarder to vapor infiltration. The joints shall be lapped and sealed with tape.

3.8 VENEER ANCHORS

Veneer anchors shall be attached with screws through the sheathing and rigid insulation to the steel studs or other support members at the locations shown. When rigid insulation is used, the method of connecting the veneer anchor through the insulation shall be approved by the Contracting Officer. Veneer anchors shall be installed with the outermost wires lying between (5/8 inch) from each face of the masonry veneer. Synthetic rubber washers shall be used between the anchor connector plates and the moisture barrier. A clutch torque slip screw gun shall be used on screws attaching veneer anchors to cold-formed steel members. Veneer anchors with corrugated sheet metal or wire mesh members extending across the wall cavity shall not be used. There shall be one veneer anchor for each (two square feet) of wall and shall be attached to steel studs and other supports with a maximum spacing of (24 inches) on center. For pintle-eye anchors the vertical distance between the pintle section

horizontal wires and the eye section horizontal wires shall not exceed (1/2 inch).

3.9 FLASHING

Continuous flashing shall be provided at the bottom of the wall cavity just above grade. Flashing shall also be provided above and below openings at lintels and sills, at shelf angles, and as indicated on the drawings. Flashing shall be as detailed and as specified in Section 07600 SHEET METALWORK, GENERAL. Flashing shall be lapped a minimum of (6 inches) at joints and shall be sealed watertight with a mastic as recommended by the flashing manufacturer. Ends over doors, windows and openings shall be turned up and secured. Flashing shall be lapped under the insulating sheathing a minimum of (6 inches) and securely attached to the gypsum sheathing. Flashing shall extend through the exterior face of the masonry veneer, and be evenly trimmed t oleave a maximum of 9 mm, (3/8 inch) exposed, and then be turned down to form a drip.

3.10 MASONRY VENEER

Exterior masonry wythes shall be constructed to the thickness indicated on the drawings. A cavity consisting of a (2 inch) minimum width air space will be provided between the moisture barrier and the masonry veneer. Masonry veneer shall not be installed until the exterior sheathing, rigid insulation, moisture barrier, veneer anchors and flashing have been installed on the cold-formed steel framing system. Extreme care shall be taken to avoid damage to the moisture barrier and flashing during construction of the masonry veneer. Any portion of the moisture barrier and flashing that is damaged shall be repaired or replaced prior to completion of the veneer. Masonry shall be placed in running bond pattern. Vertical joints on alternating courses shall be aligned and kept vertically plumb. Solid masonry units shall be laid in a non-furrowed full bed of mortar, beveled and sloped toward the center of the wythe on which the mortar is placed. Units shall be shoved into place so that the vertical mortar joints are completely full and tight. Units that have been disturbed after the mortar has stiffened shall be removed, cleaned and relaid. Mortar which protrudes more than (1/2 inch) into the cavity space shall be removed. Means shall be provided to ensure that the cavity space is kept clean of mortar droppings and other loose debris. Chases and raked-out joints shall be kept free from mortar and debris. Faces of units used in finished exposed areas shall be free from chipped edges, material texture or color defects or other imperfections distracting from the appearance of the finished work.

3.10.1 Surface Preparation

Surfaces on which masonry is to be laid shall be cleaned of laitance or other foreign material. No units having a film of water shall be laid.

3.10.2 Hot Weather Construction

Temperatures of masonry units and mortar shall not be greater than (120 degrees F) when laid. Masonry erected when the ambient air temperature is more than (99 degrees F) in the shade and when the relative humidity is less than 50 percent shall be given protection from the direct exposure to wind and sun for 48 hours after the installation.

3.10.3 Cold Weather Construction

Temperatures of masonry units and mortar shall not be less than (40 degrees F) when laid. When the ambient air temperature is (32 degrees F) or less, masonry veneer under construction shall be protected and maintained at a temperature greater than (32 degrees F) for a period of 48 hours after installation. The proposed method of maintaining the temperature within the specified range shall be submitted for approval prior to implementation. No units shall be laid on a surface having a film of frost or water.

3.10.4 Tolerances

Masonry shall be laid plumb, level and true to line within the tolerances specified in TABLE 1. All masonry corners shall be square unless otherwise indicated on the drawings.

3.10.5 Mixing of Mortar

Mortar shall be mixed in a mechanically operated mortar mixer for at least 3 minutes but not more than 5 minutes. Measurement of ingredients for mortar shall be by volume. Measurement of sand shall be accomplished by the use of a container of known capacity or shovel count based on a container of known capacity. Water shall be mixed with the dry ingredients in sufficient amount to provide a workable mixture which will adhere to the vertical surfaces of the masonry units. Mortar that has stiffened because of loss of water through evaporation shall be retempered by adding water to restore the proper consistency and workability. Mortar that has reached its initial set or that has not been used within 2-1/2 hours shall be discarded.

3.10.6 Cutting and Fitting

Wherever possible, full units shall be used in lieu of cut units. Where cut units are required to accommodate the design, cutting shall be done by masonry mechanics using power masonry saws. Wet-cut units shall be dried to the same surface-dry appearances of uncut units before being placed in the work. Cut edges shall be clean, true and sharp. Openings to accommodate pipes, conduits, and other accessories shall be neatly formed so that framing or escutcheons required will completely conceal the cut edges. Insofar as practicable, all cutting and fitting shall be accomplished while masonry work is being erected.

3.10.7 Masonry Units

When being laid, masonry units shall have suction sufficient to hold the mortar and to absorb water from the mortar, but shall be damp enough to allow the mortar to remain in a plastic state to permit the unit to be leveled and plumbed immediately after being laid without destroying bond. Masonry units with frogging shall be laid with the frog side down and better or face side exposed to view. Masonry units that are cored, recessed or otherwise deformed may be used in sills or in other areas except where deformations will be exposed to view.

3.10.8 Mortar Joints

Mortar joint widths shall be uniform and such that the specified widths are maintained throughout. Joints shall be of thickness equal to the difference between the actual and nominal dimensions of the masonry units in either height or length but in no case shall the joints be less than (1/4 inch) nor more than (1/2 inch) wide. Joints shall be tooled slightly

concave. Tooling shall be accomplished when mortar is thumbprint hard and in a manner that will compress and seal the mortar joint and produce joints of straight and true lines free of tool marks.

3.10.9 Joint Reinforcement

Unless otherwise shown, joint reinforcement shall be spaced at (16 inches) on center vertically. Joint reinforcement shall not be placed in the same masonry course as veneer anchors unless the anchors are designed to accommodate the wire. Joint reinforcement shall be placed so that longitudinal wires are centered in the veneer wythe for solid units. Longitudinal wires shall be fully embedded in mortar for their entire length. Splices in joint reinforcement shall be lapped a minimum of (6 inches). Joint reinforcement must be discontinuous at all veneer joints. The minimum cover for joint reinforcement is (5/8 inches).

3.10.10 Veneer Joints

Brick expansion joints shall be provided at the locations shown on the drawings. Details of joints shall be as indicated on the drawings. Joints shall be clean and free of mortar and shall contain only backer rod and sealant, installed in accordance with Section 07900 JOINT SEALING. Horizontal reinforcement shall not extend through the joints.

3.10.11 Weep Holes

Weep holes shall be provided at all flashing locations at intervals of (24 inches). Weep holes shall be placed in head joints just above the flashing. Weep holes shall be formed by installation of weep cords or head joint vents may be used. Weep holes shall be kept free of mortar and other obstructions.

3.10.12 Head Joint Vents

Head joint vents shall be provided near the top of the veneer wythe at the same spacing as the weep holes.

3.10.13 Discontinuous Work

When necessary to temporarily discontinue the work, masonry shall be stepped back for joining when work resumes. Toothing may be used only when specifically approved. Before resuming work, loose mortar shall be removed and the exposed joint shall be thoroughly cleaned. Top of walls subjected to rain or snow shall be covered with nonstaining waterproof covering or membrane when work is not in process. Covering shall extend a minimum of (2 feet) down on each side of the wall and shall be held securely in place.

3.10.14 Cleaning

Mortar daubs or splashings shall be completely removed from finished exposed masonry surfaces before they harden or set up. Before completion of the work, defects in mortar joints shall be raked out as necessary, filled with mortar, and tooled to match the adjacent existing mortar in the joints. The proposed cleaning method shall be done on the sample wall panel and the sample panel shall be examined for discoloration or stain. If the sample panel is discolored or stained, the method of cleaning shall be changed to ensure that the masonry surfaces in the structure will not be adversely affected. Masonry surfaces shall not be cleaned, other than removing excess surface mortar, until mortar in joints has hardened.

Cleaning shall be accomplished with the use of stiff bristle fiber brushes, wooden paddles, wooden scrapers, or other suitable nonmetallic tools. The exposed brick surfaces shall be saturated with water and cleaned with a proprietary brick cleaning agent recommended by the clay products manufacturer. The cleaning agent shall not adversely affect the brick masonry surfaces. Proprietary cleaning agents shall be used in conformance with the cleaning product manufacturer's printed recommendations. Efflorescence or other stains shall be removed in conformance with the recommendations of the masonry unit manufacturer. After construction and cleaning, masonry surfaces shall be left clean, free of mortar daubs, stain, and discolorations, including scum from cleaning operations, and will have tight mortar joints throughout. Metallic tools and brushes shall not be used for cleaning.

3.11 BUILDING EXPANSION JOINTS

Expansion joints shall be located where indicated and shall be of the size and details shown.

-- End of Section --

SECTION TABLE OF CONTENTS

DIVISION 05 - METALS

SECTION 05120

STRUCTURAL STEEL

09/97

PART 1 GENERAL

1.1 REFERENCES
1.2 GENERAL REQUIREMENTS
1.3 SUBMITTALS
1.4 STORAGE

PART 2 PRODUCTS

2.1 STRUCTURAL STEEL
2.1.1 Carbon Grade Steel
2.2 STRUCTURAL TUBING
2.3 STEEL PIPE
2.4 Not Used
2.5 HIGH STRENGTH BOLTS AND NUTS
2.6 CARBON STEEL BOLTS AND NUTS
2.7 NUTS DIMENSIONAL STYLE
2.8 WASHERS
2.9 PAINT

PART 3 EXECUTION

3.1 FABRICATION
3.2 ERECTION
3.2.1 Structural Connections
3.2.2 Base Plates and Bearing Plates
3.2.3 Field Priming

-- End of Section Table of Contents --

SECTION 05120

STRUCTURAL STEEL
09/97

PART 1 GENERAL

1.1 REFERENCES

The publications listed below form a part of this specification to the extent referenced. The publications are referred to in the text by basic designation only.

AMERICAN INSTITUTE OF STEEL CONSTRUCTION (AISC)

AISC FCD	(1995a) Quality Certification Program Description
AISC ASD Mnl	(1989) Manual of Steel Construction Allowable Stress Design
AISC ASD/LRFD Vol II	(1992) Manual of Steel Construction Vol II: Connections
AISC Design Guide #10	(1989) Erection Bracing of Low-Rise Structural Steel Frames
AISC LRFD Vol II	(1995) Manual of Steel Construction Load & Resistance Factor Design, Vol II: Structural Members, Specifications & Codes
AISC Pub No. S303	(1992) Code of Standard Practice for Steel Buildings and Bridges

AMERICAN SOCIETY FOR TESTING AND MATERIALS (ASTM)

ASTM A 6/A 6M	(1997) General Requirements for Rolled Structural Steel Bars, Plates, Shapes, and Sheet Piling
ASTM A 36/A 36M	(1996) Carbon Structural Steel
ASTM A 53	(1997) Pipe, Steel, Black and Hot-Dipped, Zinc-Coated, Welded and Seamless
ASTM A 307	(1994) Carbon Steel Bolts and Studs, 60 000 PSI Tensile Strength
ASTM A 500	(1996) Cold-Formed Welded and Seamless Carbon Steel Structural Tubing in Rounds and Shapes
ASTM F 844	(1990) Washers, Steel, Plain (Flat), Unhardened for General Use

ASTM F 959	(1996) Compressible-Washer-Type Direct Tension Indicators for Use with Structural Fasteners

AMERICAN SOCIETY OF MECHANICAL ENGINEERS (ASME)

ASME B18.21.1	(1994) Lock Washers (Inch Series)
ASME B46.1	(1995) Surface Texture (Surface Roughness, Waviness, and Lay)

AMERICAN WELDING SOCIETY (AWS)

AWS A2.4	(1993) Standard Symbols for Welding, Brazing and Nondestructive Examination
AWS D1.1	(1996) Structural Welding Code - Steel

STEEL STRUCTURES PAINTING COUNCIL (SSPC)

SSPC Paint 25	(1991) Red Iron Oxide, Zinc Oxide, Raw Linseed Oil and Alkyd Primer (without Lead and Chromate Pigments)

1.2 GENERAL REQUIREMENTS

Structural steel fabrication and erection shall be performed by an organization experienced in structural steel work of equivalent magnitude. The Contractor shall be responsible for correctness of detailing, fabrication, and for the correct fitting of structural members. Connections, for any part of the structure not shown on the contract drawings, shall be considered simple shear connections and shall be designed and detailed in accordance with pertinent provisions of AISC ASD Mnl and AISC LRFD Vol II. Substitution of sections or modification of connection details will not be accepted unless approved by the Contracting Officer. AISC ASD Mnl and AISC ASD/LRFD Vol II shall govern the work. Welding shall be in accordance with AWS D1.1. High-strength bolting shall be in accordance with AISC ASD Mnl.

1.3 SUBMITTALS

Government approval is required for submittals with a "GA" designation; submittals having an "FIO" designation are for information only. The following shall be submitted in accordance with Section 01330 SUBMITTAL PROCEDURES:

SD-04 Drawings

Structural Steel System; GA1. Structural Connections; GA1.

Shop and erection details including members (with their connections). Welds shall be indicated by standard welding symbols in accordance with AWS A2.4.

1.4 STORAGE

Material shall be stored out of contact with the ground in such manner and location as will minimize deterioration.

PART 2 PRODUCTS

2.1 STRUCTURAL STEEL

2.1.1 Carbon Grade Steel

Carbon grade steel shall conform to ASTM A 36/A 36M

2.2 STRUCTURAL TUBING

Structural tubing shall conform to ASTM A 500, Grade B..

2.3 STEEL PIPE

Steel pipe shall conform to ASTM A 53, Type S, Grade B.

2.4 Not Used

2.5 HIGH STRENGTH BOLTS AND NUTS

High strength bolts shall conform to ASTM A 325, Type 1 with carbon steel nuts conforming to ASTM A 563, Grade C

2.6 CARBON STEEL BOLTS AND NUTS

Carbon steel bolts shall conform to ASTM A 307, Grade A with carbon steel nuts conforming to ASTM A 563, Grade A.

2.7 NUTS DIMENSIONAL STYLE

Carbon steel nuts shall be Hex style when used with ASTM A 307 bolts or Heavy Hex style when used with ASTM A 325 or ASTM A 490 bolts.

2.8 WASHERS

Plain washers shall conform to ASTM F 844. Other types, when required, shall conform to ASME B18.21.1 OR ASTM F 436 OR ASTM F 959.

2.9 PAINT

Paint shall conform to SSPC Paint 25. All interior structural steel to receive fire proofing shall be free of primer and paint.

PART 3 EXECUTION

3.1 FABRICATION

Fabrication shall be in accordance with the applicable provisions of AISC ASD Mnl. Fabrication and assembly shall be done in the shop to the greatest extent possible. Compression joints depending on contact bearing shall have a surface roughness not in excess of 500 micro inches as determined by ASME B46.1, and ends shall be square within the tolerances for milled ends specified in ASTM A 6/A 6M. Structural steelwork, except for surfaces of steel to be encased in concrete, surfaces to be field welded, surfaces to be fireproofed, and contact surfaces of friction-type high-strength bolted connections, shall be prepared for painting in accordance with endorsement "P" of AISC FCD and primed with the specified paint.

3.2 ERECTION

a. Erection of structural steel, except as indicated in item b. below, shall be in accordance with the applicable provisions of AISC ASD Mnl. Erection plan shall be reviewed, stamped and sealed by a structural engineer licensed by the state in which the project is located.

b. For low-rise structural steel buildings (60 feet tall or less and a maximum of 2 stories), the erection plan shall conform to AISC Pub No. S303 and the structure shall be erected in accordance with AISC Design Guide #10.

3.2.1 Structural Connections

Anchor bolts and other connections between the structural steel and foundations shall be provided and shall be properly located and built into connecting work. Field welded structural connections shall be completed before load is applied.

3.2.2 Base Plates and Bearing Plates

Column base plates for columns and bearing plates for beams, girders, and similar members shall be provided. Base plates and bearing plates shall be provided with full bearing after the supported members have been plumbed and properly positioned, but prior to placing superimposed loads. Separate setting plates under column base plates will not be permitted. The area under the plate shall be damp-packed solidly with bedding mortar, except where nonshrink grout is indicated on the drawings. Bedding mortar and grout shall be as specified in Section 03300 CAST-IN-PLACE STRUCTURAL CONCRETE.

3.2.3 Field Priming

After erection, the field bolt heads and nuts, field welds, and any abrasions in the shop coat shall be cleaned and primed with paint of the same quality as that used for the shop coat.

-- End of Section --

SECTION TABLE OF CONTENTS

DIVISION 05 - METALS

SECTION 05300

STEEL DECKING

10/89

PART 1 GENERAL

1.1 REFERENCES
1.2 SUBMITTALS
1.3 DELIVERY, STORAGE, AND HANDLING

PART 2 PRODUCTS

2.1 DECK UNITS
2.1.1 Roof Deck
2.1.2 Not Used
2.1.3 Not Used
2.1.4 Form Deck
2.1.5 Sump Pans
2.2 TOUCH-UP PAINT
2.3 ADJUSTING PLATES
2.4 CLOSURE PLATES
2.4.1 Closure Plates for Roof Deck
2.5 ACCESSORIES

PART 3 EXECUTION

3.1 ERECTION
3.2 Not Used
3.3 ATTACHMENTS
3.4 HOLES AND OPENINGS
3.5 PREPARATION OF FIRE-PROOFED SURFACES

-- End of Section Table of Contents --

SECTION 05300

STEEL DECKING
10/89

PART 1 GENERAL

1.1 REFERENCES

The publications listed below form a part of this specification to the extent referenced. The publications are referred to in the text by basic designation only.

AMERICAN IRON AND STEEL INSTITUTE (AISI)

AISI-01	(1996) Cold-Formed Steel Design Manual

AMERICAN SOCIETY FOR TESTING AND MATERIALS (ASTM)

ASTM A 611	(1996) Steel, Sheet, Carbon, Cold-Rolled, Structural Quality
ASTM A 653/A 653M	(1996) Steel Sheet, Zinc-Coated (Galvanized) or Zinc-Iron Alloy-Coated (Galvannealed) by the Hot-Dip Process
ASTM A 780	(1993a) Repair of Damaged and Uncoated Areas of Hot-Dipped Galvanized Coatings
ASTM A 792/A 792M	(1996) Steel Sheet, 55% Aluminum-Zinc Alloy-Coated by the Hot-Dip Process

AMERICAN WELDING SOCIETY (AWS)

AWS D1.3	(1989) Structural Welding Code - Sheet Steel

STEEL DECK INSTITUTE (SDI)

SDI-02	(1987; Amended 1991) Diaphragm Design Manual
SDI Pub No 29	(1995) Design Manual for Composite Decks, Form Decks, Roof Decks, and Cellular Metal Floor Deck with Electrical Distribution

STEEL STRUCTURES PAINTING COUNCIL (SSPC)

SSPC Paint 20	(1991) Zinc-Rich Primers (Type I - Inorganic and Type II - Organic)

1.2 SUBMITTALS

Government approval is required for submittals with a "GA" designation; submittals having an "FIO" designation are for information only. The

following shall be submitted in accordance with Section 01330 SUBMITTAL PROCEDURES:

SD-01 Data

Deck Units; FIO.

Design computations for the structural properties of the deck units or SDI certification that the units are designed in accordance with SDI specifications.

SD-04 Drawings

Deck Units; GA1. Accessories; GA1. Attachments; GA1. Holes and Openings ; GA1.

Drawings shall include type, configuration, structural properties, location, and necessary details of deck units, accessories, and supporting members; size and location of holes to be cut and reinforcement to be provided; location and sequence of welded and/or fastener connections; and the manufacturer's erection instructions.

1.3 DELIVERY, STORAGE, AND HANDLING

Deck units shall be delivered to the site in a dry and undamaged condition, stored off the ground with one end elevated, and stored under a weathertight covering permitting good air circulation. Finish of deck units shall be maintained at all times by using touch-up paint whenever necessary to prevent the formation of rust.

PART 2 PRODUCTS

2.1 DECK UNITS

Deck units shall conform to SDI Pub No 29. Panels of maximum possible lengths shall be used to minimize end laps. Deck units shall be fabricated in lengths to span 3 or more supports with flush, telescoped, or nested 2 inchlaps at ends, and interlocking, or nested side laps, unless otherwise indicated. Deck with cross-sectional configuration differing from the units indicated may be used, provided that the properties of the proposed units, determined in accordance with AISI-01, are equal to or greater than the properties of the units indicated and that the material will fit the space provided without requiring revisions to adjacent materials or systems.

2.1.1 Roof Deck

Steel deck used in conjunction with insulation and built-up roofing shall conform to ASTM A 792/A 792M, ASTM A 611 or ASTM A 792/A 792M. Roof deck units shall be fabricated of the steel design thickness required by the design drawings and shall be galvanized. Steel deck to receive fireproofing shall be free of all lubricants, oils, paraffin, dirt, salt and other contaminants which can impair the adhesion of spray-applied fireproofing. Any required cleaning shall be done prior to steel joist installation using a cleaning method that is compatible with the sprayed-on fireproofing.

2.1.2 Not Used

2.1.3 Not Used

2.1.4 Form Deck

Deck used as a permanent form for concrete shall conform to ASTM A 653/A 653M or ASTM A 611. Deck used as a form for concrete shall be fabricated of the steel design thickness required by the design drawings, and shall be painted with one coat of manufacturer's standard paint.

2.1.5 Sump Pans

Sump pans shall be provided for roof drains and shall be minimum thick steel, flat or recessed type as required by type of roof drains specified. Sump pans shall be shaped to meet roof slope by the supplier or by a sheet metal specialist. Bearing flanges of sump pans shall overlap steel deck a minimum of 3 inches. Opening in bottom of pan shall be shaped, sized, and reinforced to receive roof drain.

2.2 TOUCH-UP PAINT

Touch-up paint for zinc-coated units shall be an approved galvanizing repair paint with a high-zinc dust content. Welds shall be touched-up with paint conforming to SSPC Paint 20 in accordance with ASTM A 780. Finish of deck units and accessories shall be maintained by using touch-up paint whenever necessary to prevent the formation of rust.

2.3 ADJUSTING PLATES

Adjusting plates or segments of deck units shall be provided in locations too narrow to accommodate full-size units. As far as practical, the plates shall be the same thickness and configuration as the deck units.

2.4 CLOSURE PLATES

2.4.1 Closure Plates for Roof Deck

Voids above interior walls shall be closed with sheet metal where shown. Open deck cells at parapets, end walls, eaves, and openings through roofs shall be closed with sheet metal. Sheet metal shall be same thickness as deck units.

2.5 ACCESSORIES

The manufacturer's standard accessories shall be furnished as necessary to complete the deck installation. Metal accessories shall be of the same material as the deck and have minimum design thickness as follows: saddles, 0.0474 inch; welding washers, 0.0598 inch; cant strip, 0.0295 inch; other metal accessories, 0.0358 inch; unless otherwise indicated. Accessories shall include but not be limited to saddles, welding washers, cant strips, butt cover plates, underlapping sleeves, and ridge and valley plates.

PART 3 EXECUTION

3.1 ERECTION

Erection of deck and accessories shall be in accordance with SDI Pub No 29 and the approved detail drawings. Damaged deck and accessories including material which is permanently stained or contaminated, with burned holes or deformed shall not be installed. The deck units shall be placed on secure supports, properly adjusted, and aligned at right angles to supports before

being permanently secured in place. The deck shall not be filled with concrete, used for storage or as a working platform until the units have been secured in position. Loads shall be distributed by appropriate means to prevent damage during construction and to the completed assembly. The maximum uniform distributed storage load shall not exceed the design live load. There shall be no loads suspended directly from the steel deck.

3.2 Not Used

3.3 ATTACHMENTS

All fasteners shall be installed in accordance with the manufacturer's recommended procedure, except as otherwise specified. The deck units shall be welded with nominal 5/8 inch diameter puddle welds with screws, to supports as indicated on the design drawings and in accordance with requirements of SDI Pub No 29. All welding of steel deck shall be in accordance with AWS D1.3 using methods and electrodes as recommended by the manufacturer of the steel deck being used. Welds shall be made only by operators previously qualified by tests prescribed in AWS D1.3 to perform the type of work required. Welding washers shall be used at the connections of the deck to supports. Welding washers shall not be used at sidelaps. Holes and similar defects will not be acceptable. Deck ends shall be lapped 2 inches. All partial or segments of deck units shall be attached to structural supports in accordance with Section 2.5 of SDI-02.

3.4 HOLES AND OPENINGS

All holes and openings required shall be coordinated with the drawings, specifications, and other trades. Holes and openings shall be drilled or cut, reinforced and framed as indicated on the drawings or described in the specifications and as required for rigidity and load capacity. Holes and openings less than across require no reinforcement. Holes and openings across shall be reinforced by thick steel sheet at least wider and longer than the opening and be fastened to the steel deck at each corner of the sheet and at a maximum of on center. Holes and openings larger than shall be reinforced by steel angles installed perpendicular to the steel joists and supported by the adjacent steel joists. Steel angles shall be installed perpendicular to the deck ribs and shall be fastened to the angles perpendicular to the steel joists.

3.5 PREPARATION OF FIRE-PROOFED SURFACES

Deck surfaces, both composite and noncomposite, which are to receive sprayed-on fireproofing, shall be galvanized and shall be free of all grease, mill oil, paraffin, dirt, salt, and other contaminants which impair adhesion of the fireproofing. Any required cleaning shall be done prior to steel deck installation using a cleaning method that is compatible with the sprayed-on fireproofing.

-- End of Section --

SECTION TABLE OF CONTENTS

DIVISION 05 - METALS

SECTION 05400

COLD-FORMED STEEL FRAMING

03/99

PART 1 GENERAL

1.1 REFERENCES
1.2 SUBMITTALS
1.3 DELIVERY, HANDLING AND STORAGE

PART 2 PRODUCTS

2.1 STEEL STUDS, TRACKS, BRACING, BRIDGING, AND ACCESSORIES
2.2 MARKINGS
2.3 CONNECTIONS

PART 3 EXECUTION

3.1 Delivery, Handling and Storage
3.2 CONNECTIONS
3.2.1 Welds
3.2.2 Screws
3.2.3 Anchors
3.3 INSTALLATION
3.3.1 General Requirements
3.3.2 Non-Load Bearing Walls (Curtain walls)
3.4 TOLERANCES

-- End of Section Table of Contents --

SECTION 05400
COLD-FORMED STEEL FRAMING
03/99

PART 1 GENERAL

1.1 REFERENCES

The publications listed below form a part of this specification to the extent referenced. The publications are referred to in the text by the basic designation only.

AMERICAN IRON AND STEEL INSTITUTE (AISI)

AISI Cold-Formed Spec	(1996) Specification & Commentary for the Design of Cold-Formed Steel Structural Members (Part V of the Cold-Formed Steel Design Manual)

AMERICAN SOCIETY FOR TESTING AND MATERIALS (ASTM)

ASTM A 123/A 123M	(1997a) Zinc (Hot-Dip Galvanized) Coatings on Iron and Steel Products
ASTM A 153/A 153M	(1998) Zinc Coating (Hot-Dip) on Iron and Steel Hardware
ASTM A 653/A 653M	(1997) Steel Sheet, Zinc Coated (Galvanized) or Zinc-Iron Alloy-Coated (Galvannealed) by the Hot-Dip Process
ASTM B 633	(1985; R 1994) Electrodeposited Coatings of Zinc on Iron and Steel
ASTM C 955	(1996a) Load-Bearing (Transverse and Axial) Steel Studs, Runners (Tracks), and Bracing or Bridging for Screw Application of Gypsum Panel Products and Metal Plaster Bases

AMERICAN WELDING SOCIETY (AWS)

AWS D1.3	(1989) Structural Welding Code - Sheet Steel

SOCIETY OF AUTOMOTIVE ENGINEERS (SAE)

SAE J 78	(1979) Steel Self Drilling Tapping Screws

1.2 SUBMITTALS

Government approval is required for submittals with a "GA" designation; submittals having an "FIO" designation are for information only. The following shall be submitted in accordance with Section 01330 SUBMITTAL PROCEDURES:

SD-01 Data

Calculations; GA1

Submit with shop drawings for all exterior wall and soffit systems. Indicate locations, size, spacings, gages, fastenings, and reinforcing. Design wind loads are indicated on Structural Drawings. (Note: Bidder is responsible for calculating loading requirements and satisfying standards established by Structural Drawings). Maximum deflection: L/360.

SD-04 Drawings

Cold-Formed Steel Framing; GA1.

a. Cross sections, plans, and/or elevations showing component types and locations for each framing application; including shop coatings and material thicknesses for each framing component.

b. Connection details showing fastener type, quantity, location, and other information to assure proper installation.

c. Drawings depicting panel configuration, dimensions, components, locations, and construction sequence if the Contractor elects to install prefabricated/prefinished frames.

1.3 DELIVERY, HANDLING AND STORAGE

Materials shall be delivered and handled preventing bending or other damage, and avoiding contact with soil or other contaminating materials. Finish of the framing members shall be maintained at all times, using an approved high zinc dust content, galvanizing repair paint whenever necessary to prevent the formation of rust.

PART 2 PRODUCTS

2.1 STEEL STUDS, TRACKS, BRACING, BRIDGING, AND ACCESSORIES

Framing components shall comply with ASTM C 955 and the following:

a. Material shall be corrosion-resistant steel complying with ASTM A 653/A 653M, Grade (33) or higher, having a minimum yield of (33,000) psi and a G 60 minimum zinc coating.

b. Minimum uncoated steel thickness (design thickness times 0.95):

(1). Studs and Tracks: (0.0428 inch).

(2). Bracing and bridging: Thickness as required by calculations.

(3). Accessories: Standard thickness as provided by the manufacturer.

c. Minimum Stud and Track web depth: (3-5/8 inches).

d. Minimum Stud flange width: (1-3/8 inches).

e. Minimum Return Lip on Stud Flanges: (1/4 inches).

2.2 MARKINGS

Studs and track shall have product markings on the web of the section. The markings shall be repeated throughout the length of the member at a maximum spacing of 4 feet on center and shall be legible and easily read. The product marking shall include the following:

a. Manufacturer's identification.

b. Minimum delivered uncoated steel thickness.

c. Protective coating designator.

d. Minimum yield strength.

2.3 CONNECTIONS

Screws for steel-to-steel connections shall be self-drilling tapping in compliance with SAE J 78 of the type, size, and location as shown on the drawings. Electroplated screws shall have a Type II coating in accordance with ASTM B 633. Screws, bolts, and anchors shall be hot-dipped galvanized in accordance with ASTM A 123/A 123M or ASTM A 153/A 153M as appropriate. Screws bolts, and anchors shall be hot dipped galvanized in accordance with ASTM A 123/A 123Mor ASTM A 153/A 153M as appropriate.

PART 3 EXECUTION

3.1 Delivery, Handling and Storage

a. Materials shall be delivered and handled in a manner to avoid bending or other damage and to avoid contact with the soil or other contaminating materials.

b. Finish of the framing members shall be maintained at all times, using an approved high zinc dust content galvanizing repair paint whenever necessary to prevent the formation of rust.

3.2 CONNECTIONS

3.2.1 Welds

All welding shall be performed in accordance with AWS D1.3, as modified by AISI Cold-Formed Spec. All welders, welding operations, and welding procedures shall be qualified according to AWS D1.3. All welds shall be cleaned and coated with rust inhibitive galvanizing paint.

3.2.2 Screws

Screws shall be of the self-drilling self-tapping type. Screw penetration through joined materials shall not be less than three exposed threads. Minimum spacings and edge distances for screws shall be as specified in AISI Cold-Formed Spec. Screws covered by sheathing materials shall have low profile heads.

3.2.3 Anchors

Anchors shall be of the type, size, and location required by calculations.

3.3 INSTALLATION

3.3.1 General Requirements

a. Prefabricated frames shall be square, with components attached to prevent racking during fabrication, transportation, and lifting. Design and construction of frames shall include provisions for lifting.

b. Cutting of steel framing shall be by saw, shear, or plasma cutting equipment. Oxyacetylene torch cutting is not permitted.

c. Temporary bracing shall be provided and remain in place until work is permanently stabilized.

d. Abutting lengths of track shall be butt-welded, spliced, or each length securely anchored to a common structural element. Track shall be securely anchored to the supporting structure as shown on the drawings.

e. Splicing of framing components, other than track and tension members, is not permitted.

f. Wire tying of framing members is not permitted.

3.3.2 Non-Load Bearing Walls (Curtain walls)

a. Studs shall be spaced at (16 inches) on center maximum.

b. Studs shall be plumbed, aligned, and secured to the continuous runner tracks at each end, unless the stud end terminates at a deflection track.

c. Tracks shall be securely anchored to the supporting structure as shown on the drawings.

d. Bridging required shall be installed prior to the installation of facing materials.

e. Framed wall openings shall include headers and supporting components as required. Headers shall be installed in all openings that are larger than the stud spacing in a wall.

f. At wall openings for doors, windows and other similar features, the framing system shall provide for the installation and anchorage of the required subframes or finish frames. Steel frames shall be securely attached through built-in anchors to the nearest stud on each side of the opening with self-drilling screws. Double studs shall be provided at both jambs of all door openings.

g. Installation of sheathing, wallboards, or any other collateral material shall be performed in accordance with the product manufacturer's specifications.

h. Components (Deflection Track and/or Slide Clips) shall be provided at locations shown on the drawings to accommodate potential movements of Primary Frames. Construction shall accommodate a vertical movement of (1/2 inch).

3.4 TOLERANCES

Vertical alignment (plumbness) of studs shall be within 1/960th of the span. Horizontal alignment (levelness) of walls shall be within 1/960th of their respective lengths. Spacing of studs shall not be more than plus from the designed spacing providing the the cumulative error does not exceed the requirements of the finishing material.

-- End of Section --

SECTION TABLE OF CONTENTS

DIVISION 05 - METALS

SECTION 05500

MISCELLANEOUS METAL

07/97

PART 1 GENERAL

1.1 REFERENCES
1.2 SUBMITTALS
1.3 GENERAL REQUIREMENTS
1.4 DISSIMILAR MATERIALS
1.5 WORKMANSHIP
1.6 ANCHORAGE
1.7 ALUMINUM FINISHES
1.8 SHOP PAINTING

PART 2 PRODUCTS

2.1 ACCESS DOORS AND PANELS
2.1.1 Not Used
2.1.2 Fire Rated Access Panels
2.2 Not Used
2.3 Not Used
2.4 Not Used
2.5 Not Used
2.6 Not Used
2.7 BOLLARDS
2.8 Not Used
2.9 Expansion Covers
2.9.1 Floor Covers
2.9.2 Wall Covers
2.10 Not Used
2.11 FLOOR GRATINGS AND FRAMES
2.11.1 Elevator Hoistway Grating
2.12 Not Used
2.13 Not Used
2.14 HANDRAILS
2.14.1 Steel Handrails, Including Carbon Steel Inserts
2.14.2 Aluminum Guardrails
2.15 Not Used
2.16 Not Used
2.17 Not Used
2.18 Not Used
2.19 MISCELLANEOUS
2.20 Not Used
2.21 RECESSED FLOOR MATS
2.22 Not Used
2.23 Not Used
2.24 SAFETY NOSING
2.25 Not Used
2.26 STEEL STAIRS

2.27 Not Used
2.28 CHECKERED PLATE

PART 3 EXECUTION

3.1 GENERAL INSTALLATION REQUIREMENTS
3.2 REMOVABLE ACCESS PANELS
3.3 Not Used
3.4 Not Used
3.5 INSTALLATION OF BOLLARDS
3.6 Not Used
3.7 ATTACHMENT OF GUARDRAILS
3.7.1 Installation of Steel Handrails
3.8 Not Used
3.9 Not Used
3.10 EXPANSION JOINT COVERS
3.11 RECESSED FLOOR MATS
3.12 Not Used
3.13 INSTALLATION OF SAFETY NOSINGS
3.14 Not Used
3.15 CHECKERED PLATE

-- End of Section Table of Contents --

SECTION 05500

MISCELLANEOUS METAL
07/97

PART 1 GENERAL

1.1 REFERENCES

The publications listed below form a part of this specification to the extent referenced. The publications are referred to in the text by basic designation only.

ALUMINUM ASSOCIATION (AA)

AA DAF-45	(1980; R 1993) Designation System for Aluminum Finishes

AMERICAN SOCIETY FOR TESTING AND MATERIALS (ASTM)

ASTM A 36	(1996) Carbon Structural Steel
ASTM A 53	(1996) Pipe, Steel, Black and Hot-Dipped, Zinc-Coated, Welded and Seamless
ASTM A 123	(1989a) Zinc (Hot-Dip Galvanized) Coatings on Iron and Steel Products
ASTM A 653	(1996) Steel Sheet, Zinc-Coated (Galvanized) or Zinc-Iron Alloy-Coated (Galvannealed) by the Hot-Dip Process
ASTM A 924	(1996a) Steel Sheet, Metallic-Coated by the Hot-Dip Process
ASTM B 429	(1995) Aluminum-Alloy Extruded Structural Pipe and Tube

AMERICAN WELDING SOCIETY (AWS)

AWS D1.1	(1994) Structural Welding Code - Steel

COMMERCIAL ITEM DESCRIPTIONS (CID)

CID A-A-344	(Rev B) Lacquer, Clear Gloss, Exterior, Interior

1.2 SUBMITTALS

Government approval is required for submittals with a "GA" designation; submittals having an "FIO" designation are for information only. The following shall be submitted in accordance with Section 01330 SUBMITTAL PROCEDURES:

SD-04 Drawings

Miscellaneous Metal Items; GA1.

Detail drawings indicating material thickness, type, grade, and class; dimensions; and construction details. Drawings shall include catalog cuts, erection details, manufacturer's descriptive data and installation instructions, and templates.

1.3 GENERAL REQUIREMENTS

The Contractor shall verify all measurements and shall take all field measurements necessary before fabrication. Welding to or on structural steel shall be in accordance with AWS D1.1. Items specified to be galvanized, when practicable and not indicated otherwise, shall be hot-dip galvanized after fabrication. Galvanizing shall be in accordance with ASTM A 123, ASTM A 653, or ASTM A 924, as applicable. Exposed fastenings shall be compatible materials, shall generally match in color and finish, and shall harmonize with the material to which fastenings are applied. Materials and parts necessary to complete each item, even though such work is not definitely shown or specified, shall be included. Poor matching of holes for fasteners shall be cause for rejection. Fastenings shall be concealed where practicable. Thickness of metal and details of assembly and supports shall provide strength and stiffness. Joints exposed to the weather shall be formed to exclude water.

1.4 DISSIMILAR MATERIALS

Where dissimilar metals are in contact, or where aluminum is in contact with concrete, mortar, masonry, wet or pressure-treated wood, or absorptive materials subject to wetting, the surfaces shall be protected with a coat of bituminous paint or asphalt varnish.

1.5 WORKMANSHIP

Miscellaneous metalwork shall be well formed to shape and size, with sharp lines and angles and true curves. Drilling and punching shall produce clean true lines and surfaces. Welding shall be continuous along the entire area of contact except where tack welding is permitted. Exposed connections of work in place shall not be tack welded. Exposed welds shall be ground smooth. Exposed surfaces of work in place shall have a smooth finish, and unless otherwise approved, exposed riveting shall be flush. Where tight fits are required, joints shall be milled. Corner joints shall be coped or mitered, well formed, and in true alignment. Work shall be accurately set to established lines and elevations and securely fastened in place. Installation shall be in accordance with manufacturer's installation instructions and approved drawings, cuts, and details.

1.6 ANCHORAGE

Anchorage shall be provided where necessary for fastening miscellaneous metal items securely in place. Anchorage not otherwise specified or indicated shall include slotted inserts made to engage with the anchors, expansion shields, and power-driven fasteners when approved for concrete; toggle bolts and through bolts for masonry; machine and carriage bolts for steel; and lag bolts and screws for wood.

1.7 ALUMINUM FINISHES

Unless otherwise specified, aluminum items shall have standard mill finish.

The thickness of the coating shall be not less than that specified for protective and decorative type finishes for items used in interior locations or architectural Class I type finish for items used in exterior locations in AA DAF-45. Items to be anodized shall receive a polished satin finish. Aluminum surfaces to be in contact with plaster or concrete during construction shall be protected with a field coat conforming to CID A-A-344.

1.8 SHOP PAINTING

Surfaces of ferrous metal except galvanized surfaces, shall be cleaned and shop coated with the manufacturer's standard protective coating unless otherwise specified. Surfaces of items to be embedded in concrete shall not be painted. Items to be finish painted shall be prepared according to manufacturer's recommendations or as specified.

PART 2 PRODUCTS

2.1 ACCESS DOORS AND PANELS

Doors and panels shall be flush type unless otherwise indicated. Frames for access doors shall be fabricated of not lighter than (16 gauge) steel with welded joints and finished with anchorage for securing into construction. Access doors shall be a minimum of (14 by 20 inches) except as otherwise noted on drawings, and of not lighter than steel, with stiffened edges, complete with attachments. Access doors shall be hinged to frame and provided with a flush face, screw driver operated latch. Exposed metal surfaces shall have a shop applied prime coat.

2.1.1 Not Used

2.1.2 Fire Rated Access Panels

Access doors and panels located in fire-rated walls shall be of fire-rated to match the surrounding wall construction.

2.2 Not Used

2.3 Not Used

2.4 Not Used

2.5 Not Used

2.6 Not Used

2.7 BOLLARDS

Pipe guards shall be heavy duty steel pipe conforming to ASTM A 53, Type E or S, weight STD, black finish.

2.8 Not Used

2.9 Expansion Covers

Expansion joint covers shall be constructed of 3 mm (1/8") extruded aluminum with anodized satin finish for walls and with standard mill finish for floor covers and exterior covers. Plates, backup angles, expansion filler strip and anchors shall be provided. Expansion joint system shall

provide a one hour fire rating and 38 mm (1-1/2 inch) movement.

2.9.1 Floor Covers

Floor expansion joint covers shall set flush with adjacent surfaces and shall be able to receive 9 mm (3/8 ") floor finish material either side of the expansion joint.

2.9.2 Wall Covers

Wall expansion joint covers shall be 10 mm (3/8") deep, of a one piece design (similar to MM Systems style "EX-K2" with 8700 cover.)

2.10 Not Used

2.11 FLOOR GRATINGS AND FRAMES

Carbon steel grating shall be provided in accordance drawings. Edges shall be banded with bars less in height than bearing bars for grating sizes above Banding bars shall be flush with the top of bearing grating. Frames shall be of welded steel construction finished to match the grating. Unless noted otherwise, floor gratings and frames shall be galvanized after fabrication. Provide grating at balconies and service court area well, with bars 38 mm (1-1/2 inch) deep by 5 (3/16") in a single panel. Bars shall be oriented as indicated on Drawings.2.11.1 Elevator Hoistway Grating

Grating at top of elevator shaft to be black steel with 25 x 3mm (1 x 1/8 inch)bearing bars spaced at 30mm (1 3/16")O.C. Grating to be designed to withstand concentrated load of 250 pounds. Refer to drawings for details.

2.12 Not Used

2.13 Not Used

2.14 HANDRAILS

Handrails shall be designed to resist a concentrated load of in any direction at any point of the top of the rail or 20 pounds per foot applied horizontally to top of the rail, whichever is more severe.

2.14.1 Steel Handrails, Including Carbon Steel Inserts

Steel handrails, including inserts in concrete, shall be as indicated on the Drawings. Railings shall be shop painted. Pipe collars shall be steel.

a. Joint posts, rail, and corners shall be fabricated by mitered and welded joints by fitting post to top rail and intermediate rail to post, mitering corners, groove welding joints, and grinding smooth. Railing splices shall be butted and reinforced by a tight fitting interior sleeve not less than 6 inches long.

b. Removable sections, toe-boards, and brackets shall be provided as indicated.

2.14.2 Aluminum Guardrails

Guardrails shall be sized as indicated on the drawings, and shall be

fabricated of Schedule 40 tube ASTM B 429, in sizes indicated on Drawings. Railings and collars shall be clear anodized aluminum finish. All fasteners shall be Series 300 stainless steel.

a. Jointing shall be by
mitered and welded joints, made by fitting post to top rail and intermediate rail to post and corners. Welds shall be groove welded and ground smooth.

2.15 Not Used

2.16 Not Used

2.17 Not Used

2.18 Not Used

2.19 MISCELLANEOUS

Miscellaneous steel or aluminum plates and shapes for items that do not form a part of the structural steel framework, such as lintels, sill angles, aluminum channels, miscellaneous mountings, and frames, shall be provided to complete the work.

2.20 Not Used

2.21 RECESSED FLOOR MATS

Recessed floor mats shall be of aluminum construction with level base frame and drain pan, and heavy duty carpet tread inserts. Treads and tread rails shall be securely locked into tread rails, yet remain easily accessible for in field replacement in the event of excessive wear or damage. Tread rails to be fabricated from 6063-T52 aluminum alloy and shall be continuously hinged at each tread connection to permit cleaning. Tread rail finish to be standard mill. Framing members shall be fabricated of 6063-T52 aluminum alloy, neatly coped at corners and assembled with stainless steel screws to provide for rigid frame connections. Surfaces in contact with masonry shall receive one shop coat of zinc chromate primer. All other aluminum surfaces shall have a mill finish. All grid and framing sections when installed, shall be designed to support a minimum 300 lbs. per wheel loading. Mats shall be recessed for for use in vestibule. Construction details of recessed areas are shown on the drawings.

2.22 Not Used

2.23 Not Used

2.24 SAFETY NOSING

Safety nosings shall be of cast aluminum with an integral abrasive grit of aluminum oxide or silicon carbine. Nosing shall be (3 inches) wide and terminating at the ends of treads. Safety nosings shall be provided with anchors not less than (3/4 inch) long. Integrally cast mushroom anchors are not acceptable.

2.25 Not Used

2.26 STEEL STAIRS

Steel stairs shall be complete with structural or formed channel stringers, metal pan cement-filled treads, landings, columns, handrails, and necessary bolts and other fastenings as indicated. Structural steel shall conform to ASTM A 36. Stairs and accessories shall be primed. Risers on stairs with metal pan treads shall be deformed to form a sanitary cove to retain the tread concrete. Provide wire mesh panels at guardrails as indicated on drawings.

2.27 Not Used

2.28 CHECKERED PLATE

Checkered plate shall be minimum 3 mm (1/8 inch) thick galvanized steel where used at door thresholds at Doors No. 2242, 3242 and 4242. Break steel plate as indicated on drawings. Extend plate full width of door frame.

PART 3 EXECUTION

3.1 GENERAL INSTALLATION REQUIREMENTS

All items shall be installed at the locations shown and according to the manufacturer's recommendations. Items listed below require additional procedures as specified.

3.2 REMOVABLE ACCESS PANELS

A removable access panel not less than (12 by 12 inches) shall be installed directly below each valve, flow indicator, damper, or air splitter that is located above the ceiling, other than an acoustical ceiling, and that would otherwise not be accessible.

3.3 Not Used

3.4 Not Used

3.5 INSTALLATION OF BOLLARDS

Bollard shall be set vertically in concrete piers. Piers shall be constructed of, and the hollow cores of the pipe filled with, concrete specified in SECTION 03300 CAST-IN-PLACE STRUCTURAL CONCRETE.

3.6 Not Used

3.7 ATTACHMENT OF GUARDRAILS

Toeboards and brackets shall be installed where indicated. Splices, where required, shall be made at expansion joints. Removable sections shall be installed as indicated.

3.7.1 Installation of Steel Handrails

Installation shall be as indicated on drawings.

3.8 Not Used

3.9 Not Used

3.10 EXPANSION JOINT COVERS

Coordinate installation requirements with other trades. Final fitting and cutting of recesses for floor covers into existing construction shall also be a part of this Section.

3.11 RECESSED FLOOR MATS

Contractor shall verify field measurements prior to releasing materials for fabrication by the manufacturer. A mat frame shall be used to ensure recess accuracy in size, shape and depth. Drain pit shall be formed by blocking out concrete when frames are installed. Pit shall be dampproofed after concrete has set. Frames shall be assembled onsite and installed so that upper edge will be level with finished floor surface. A cement base shall be screeded inside the mat recess frame area using the edge provided by the frame as a guide. The frame shall be anchored into the cement with anchor pins a minimum of on center.

3.12 Not Used

3.13 INSTALLATION OF SAFETY NOSINGS

Nosing shall be completely embedded in concrete before the initial set of the concrete occurs and shall finish flush with the top of the concrete surface.

3.14 Not Used

3.15 CHECKERED PLATE

Checkered plate shall be installed flush with the floor.

-- End of Section --

SECTION TABLE OF CONTENTS

DIVISION 06 - WOODS & PLASTICS

SECTION 06100

ROUGH CARPENTRY

09/96

PART 1 GENERAL

1.1 REFERENCES
1.2 SUBMITTALS
1.3 DELIVERY AND STORAGE

PART 2 PRODUCTS

2.1 LUMBER AND SHEATHING
2.1.1 Grading and Marking
2.1.1.1 Lumber Products
2.1.1.2 Plywood and Other Sheathing Products
2.1.2 Sizes
2.1.3 Treatment
2.1.3.1 Lumber and Timbers
2.1.3.2 Plywood
2.1.4 Moisture Content
2.1.5 Fire-Retardant Treatment
2.1.6 Sheathing
2.1.6.1 Not Used
2.1.6.2 Not Used
2.1.6.3 Plywood
2.1.6.4
2.1.6.5 Wood
2.1.7 Miscellaneous Wood Members
2.1.7.1 Nonstress Graded Members
2.1.7.2
2.1.7.3 Not Used
2.1.7.4 Blocking
2.1.7.5 Rough Bucks and Frames
2.2 ACCESSORIES AND NAILS
2.2.1 Anchor Bolts
2.2.2 Bolts: Lag, Toggle, and Miscellaneous Bolts and Screws
2.2.3 Clip Angles
2.2.4 Expansion Shields
2.2.5
2.2.6
2.2.7 Nails and Staples

PART 3 EXECUTION

3.1 INSTALLATION OF FRAMING
3.1.1 General
3.2 INSTALLATION OF SHEATHING
3.2.1 Not Used
3.2.2 Not Used

3.2.3 Plywood Panels
3.3 INSTALLATION OF MISCELLANEOUS WOOD MEMBERS
3.3.1 Not Used
3.3.2 Not Used
3.3.3 Blocking
3.3.4 Nailers and Nailing Strips
3.3.5 Not Used
3.3.6 Furring Strips
3.4 [Enter Appropriate Subpart Title Here]

-- End of Section Table of Contents --

SECTION 06100

ROUGH CARPENTRY
09/96

PART 1 GENERAL

1.1 REFERENCES

The publications listed below form a part of this specification to the extent referenced. The publications are referred to in the text by basic designation only.

AMERICAN SOCIETY FOR TESTING AND MATERIALS (ASTM)

ASTM A 307	(1994) Carbon Steel Bolts and Studs, 60 000 PSI Tensile Strength
ASTM D 2898	(1994) Accelerated Weathering of Fire-Retardant-Treated Wood for Fire Testing
ASTM F 547	(1977; R 1990) Definitions of Terms Relating to Nails for Use with Wood and Wood-Base Materials

AMERICAN WOOD-PRESERVERS' ASSOCIATION (AWPA)

AWPA C2	(1995) Lumber, Timber, Bridge Ties and Mine Ties - Preservative Treatment by Pressure Processes
AWPA C9	(1995) Plywood - Preservative Treatment by Pressure Processes
AWPA C20	(1993) Structural Lumber Fire-Retardant Pressure Treatment
AWPA C27	(1993) Plywood - Fire-Retardant Pressure Treatment
AWPA M4	(1995) Standard for the Care of Preservative-Treated Wood Products
AWPA P5	(1996) Standards for Waterborne Preservatives

CALIFORNIA REDWOOD ASSOCIATION (CRA)

CRA-01	(1997) Standard Specifications for Grades of California Redwood Lumber

DEPARTMENT OF COMMERCE (DOC)

DOC PS 1	(1996) Voluntary Product Standard - Construction and Industrial Plywood
DOC PS 2	(1992) Performance Standards for Wood-Based Structural-Use Panels

FACTORY MUTUAL ENGINEERING AND RESEARCH (FM)

FM LPD 1-49	(1995) Loss Prevention Data Sheet - Perimeter Flashing

NATIONAL HARDWOOD LUMBER ASSOCIATION (NHLA)

NHLA-01	(1994) Rules for the Measurement & Inspection of Hardwood & Cypress

NORTHEASTERN LUMBER MANUFACTURERS ASSOCIATION (NELMA)

NELMA-01	(1997) Standard Grading Rules for Northeastern Lumber

SOUTHERN CYPRESS MANUFACTURERS ASSOCIATION (SCMA)

SCMA-01	(1986; Supple No. 1, Aug 1993) Standard Specifications for Grades of Southern Cypress

SOUTHERN PINE INSPECTION BUREAU (SPIB)

SPIB 1003	(1994; Supple 8 thru 11) Standard Grading Rules for Southern Pine Lumber

WEST COAST LUMBER INSPECTION BUREAU (WCLIB)

WCLIB Std 17	(1996; Supples VII(A-E), VIII(A-C)) Grading Rules for West Coast Lumber

WESTERN WOOD PRODUCTS ASSOCIATION (WWPA)

WWPA-01	(1995; Supple Nos. 1 thru 5) Western Lumber Grading Rules 95

1.2 SUBMITTALS

Government approval is required for submittals with a "GA" designation; submittals having an "FIO" designation are for information only. The following shall be submitted in accordance with Section 01330 SUBMITTAL PROCEDURES:

SD-13 Certificates

Grading and Marking; FIO.

Manufacturer's certificates (approved by an American Lumber Standards approved agency) attesting that lumber and material not normally grade marked meet the specified requirements. Certificate of Inspection for

grade marked material by an American Lumber Standards Committee (ALSC) recognized inspection agency prior to shipment.

1.3 DELIVERY AND STORAGE

Materials shall be delivered to the site in undamaged condition, stored off ground in fully covered, well ventilated areas, and protected from extreme changes in temperature and humidity.

PART 2 PRODUCTS

2.1 LUMBER AND SHEATHING

2.1.1 Grading and Marking

2.1.1.1 Lumber Products

Solid sawn and finger-jointed lumber shall bear an authorized gradestamp or grademark recognized by ALSC, or an ALSC recognized certification stamp, mark, or hammerbrand. Surfaces that are to be exposed to view shall not bear grademarks, stamps, or any type of identifying mark. Hammer marking will be permitted on timbers when all surfaces will be exposed to view.

2.1.1.2 Plywood and Other Sheathing Products

Materials shall bear the grademark or other identifying marks indicating grades of material and rules or standards under which produced, including requirements for qualifications and authority of the inspection organization. Except for plywood and structural-use panels, bundle marking will be permitted in lieu of marking each individual piece. Surfaces that are to be exposed to view shall not bear grademarks or other types of identifying marks.

2.1.2 Sizes

Lumber and material sizes shall conform to requirements of the rules or standards under which produced. Unless otherwise specified, lumber shall be surfaced on four sides. Unless otherwise specified, sizes indicated are nominal sizes, and actual sizes shall be within manufacturing tolerances allowed by the standard under which the product is produced.

2.1.3 Treatment

Exposed areas of treated wood that are cut or drilled after treatment shall receive a field treatment in accordance with AWPA M4. Items of all-heart material of cedar, cypress, or redwood will not require preservative treatment, except when in direct contact with soil. Except as specified for all-heart material of the previously mentioned species, the following items shall be treated:

a. Wood members in contact with or within (18 inches) of soil.

b. Wood members in contact with water.

c. Wood members exposed to the weather including those used in roofing systems or as nailing strips or nailers over fiberboard.

d. Wood members set into concrete regardless of location.

e. Wood members in contact with concrete that is in contact with soil or water or that is exposed to weather.

2.1.3.1 Lumber and Timbers

Lumber and timbers shall be treated in accordance with AWPA C2 with waterborne preservatives listed in AWPA P5 to a retention level as follows:

a. intended for above ground use.

b. intended for ground contact and fresh water use.

2.1.3.2 Plywood

Plywood shall be treated in accordance with AWPA C9 with waterborne preservatives listed in AWPA P5 to a retention level as follows:

a. intended for above ground use.

b. intended for ground contact and fresh water use.

2.1.4 Moisture Content

At the time lumber and other materials are delivered and when installed in the work their moisture content shall be as follows:

a. Treated and Untreated Lumber : (4 inches) or less, nominal thickness, 19 percent maximum. (5 inches) or more, nominal thickness, 23 percent maximum in a (3 inch) perimeter of the timber cross-section.

b. Not Used

c. Materials Other Than Lumber: In accordance with standard under which product is produced.

2.1.5 Fire-Retardant Treatment

Fire-retardant treated wood shall be pressure treated in accordance with AWPA C20 for lumber and AWPA C27 for plywood. Material use shall be defined in AWPA C20 and AWPA C27 for Interior Type B and Exterior Type. Treatment and performance inspection shall be by an independent and qualified testing agency that establishes performance ratings. Each piece or bundle of treated material shall bear identification of the testing agency to indicate performance in accordance with such rating. Treated materials to be exposed to rain wetting shall be subjected to an accelerated weathering technique in accordance with ASTM D 2898 prior to being tested for compliance with AWPA C20 or AWPA C27. Items to be treated include: Blocking in fire-rated walls..

2.1.6 Sheathing

Miscellaneous sheathing shall beplywoodfor roof sheathing.

2.1.6.1 Not Used

2.1.6.2 Not Used

2.1.6.3 Plywood

Plywood shall conform to DOC PS 1, APA PRP-108 or DOC PS 2, Grade C-D with exterior glue. Sheathing for roof and walls without corner bracing of framing shall have a span rating of 16/0 or greater for supports (16 inches) on center and a span rating of 24/0 or greater for supports (24 inches) on center.

2.1.6.4 Not Used

2.1.6.5 Wood

Species and grade shall be in accordance with TABLE I at the end of this section. Roof sheathing shall be (3/4 inch) thick for supports (16 inches) on center.

2.1.7 Miscellaneous Wood Members

2.1.7.1 Nonstress Graded Members

Members shall include bridging, corner bracing, furring, grounds, and nailing strips. Members shall be in accordance with TABLE I for the species used. Sizes shall be as follows unless otherwise shown:

2.1.7.2 Not Used

2.1.7.3 Not Used

2.1.7.4 Blocking

Blocking shall be standard or number 2 grade.

2.1.7.5 Rough Bucks and Frames

Rough bucks and frames shall be straight standard or number 2 grade.

2.2 ACCESSORIES AND NAILS

Markings shall identify both the strength grade and the manufacturer. Accessories and nails shall conform to the following:

2.2.1 Anchor Bolts

ASTM A 307, size as indicated, complete with nuts and washers.

2.2.2 Bolts: Lag, Toggle, and Miscellaneous Bolts and Screws

Type, size, and finish best suited for intended use. Finish options include zinc compounds, cadmium, and aluminum paint impregnated finishes.

2.2.3 Clip Angles

Steel, , size best suited for intended use; or zinc-coated steel or iron commercial clips designed for connecting wood members.

2.2.4 Expansion Shields

Type and size best suited for intended use.

2.2.5 Not Used

2.2.6 Not Used

2.2.7 Nails and Staples

ASTM F 547, size and type best suited for purpose; staples shall be as recommended by the manufacturer of the materials to be joined. For sheathing length of nails shall be sufficient to extend (1 inch) into supports. In general, 8-penny or larger nails shall be used for nailing through (1 inch) thick lumber and for toe nailing (2 inch) thick lumber; 16-penny or larger nails shall be used for nailing through (2 inch) thick lumber. Nails used with treated lumber and sheathing shall be galvanized. Nailing shall be in accordance with the recommended nailing schedule contained in AF&PA T11. Where detailed nailing requirements are not specified, nail size and spacing shall be sufficient to develop an adequate strength for the connection. The connection's strength shall be verified against the nail capacity tables in AF&PA T01. Reasonable judgement backed by experience shall ensure that the designed connection will not cause the wood to split. If a load situation exceeds a reasonable limit for nails, a specialized connector shall be used.

PART 3 EXECUTION

3.1 INSTALLATION OF FRAMING

3.1.1 General

General framing shall be in accordance with AF&PA T11.Members shall be closely fitted, accurately set to required lines and levels, and rigidly secured in place. Members shall be cut, notched, or bored in accordance with applicable requirements of AF&PA T01 for the passage of pipes, wires, or conduits.

3.2 INSTALLATION OF SHEATHING

3.2.1 Not Used

3.2.2 Not Used

3.2.3 Plywood Panels

Sheathing shall be applied with edges (1/8 inch) apart at side and end joints, and nailed at supported edges at (6 inches) on center and at intermediate supports (12 inches) on center unless otherwise shown. Nailing of edges shall be (3/8 inch) from the edges. Wall sheathing shall extend over top and bottom plates, and if applied horizontally the vertical joints shall be made over supports and staggered.

3.3 INSTALLATION OF MISCELLANEOUS WOOD MEMBERS

3.3.1 Not Used

3.3.2 Not Used

3.3.3 Blocking

Blocking shall be provided as necessary for application of sheathing, wallboard, and other materials or building items, and to provide firestopping.

3.3.4 Nailers and Nailing Strips

Nailers and nailing strips shall be provided as necessary for the attachment of finish materials. Stacked nailers shall be assembled with spikes or nails spaced not more than (18 inches) on center and staggered. Beginning and ending nails shall not be more than (6 inches) for nailer end. Ends of stacked nailers shall be offset approximately (12 inches) in long runs and alternated at corners. Anchors shall extend through the entire thickness of the nailer. Strips shall be run in lengths as long as practicable, butt jointed, and rigidly secured in place. Nailers and nailer installation for Factory Mutual wind uplift rated roof systems specified in other Sections of these specifications shall conform to the recommendations contained in FM LPD 1-49.

3.3.5 Not Used

3.3.6 Furring Strips

Furring strips shall be provided at the locations shown. Furring strips shall be installed at (16 inches) on center unless otherwise shown, run in

lengths as long as practicable, butt jointed and rigidly secured in place.

3.4 [Enter Appropriate Subpart Title Here]

TABLE I. SPECIES AND GRADE

Wall Sheathing, Furring

Grading Rules	Species	Const Standard	No. 2 Comm	No. 2 Board Comm	No. 3 Comm
NHLA-01					
	Cypress			X	
NELMA-01					
	Northern White Cedar				X
	Eastern White Pine	X			
	Northern Pine	X			
	Balsam Fir				X
	Eastern Hemlock-Tamarack				X
CRA-01					
	Redwood		X		
SCMA-01					
	Cypress			X	
SPIB 1003					
	Southern Pine		X		
WCLIB Std 17					
	Douglas Fir-Larch	X			
	Hem-Fir	X			
	Sitka Spruce	X			
	Mountain Hemlock	X			
	Western Cedar	X			
WWPA-01					
	Douglas Fir-Larch	X			
	Hem-Fir	X			
	Idaho White Pine	X			
	Lodgepole Pine			X	
	Ponderosa Pine			X	
	Sugar Pine			X	
	Englemann Spruce			X	
	Douglas Fir South			X	
	Mountain Hemlock			X	
	Subalpine Fir			X	
	Western Cedar			X	

-- End of Section --

SECTION TABLE OF CONTENTS

DIVISION 06 - WOODS & PLASTICS

SECTION 06200

FINISH CARPENTRY

09/96

PART 1 GENERAL

1.1 REFERENCES
1.2 SUBMITTALS
1.3 DELIVERY AND STORAGE

PART 2 PRODUCTS

2.1 WOOD ITEMS AND TRIM
2.1.1 Grading and Marking
2.1.2 Sizes and Patterns
2.1.3 Moisture Content
2.1.4 Wood Species
2.1.5 Not Used
2.1.6 Sheet Materials
2.1.6.1 Hardwood Plywood
2.1.6.2 Wood Particleboard / Fiberboard (MDF)
2.1.6.3 Hardboard
2.1.7 Veneer Materials
2.1.7.1 Wood Veneer
2.1.7.2 Low Pressure Laminate (Melamine)
2.1.7.3 Plastic Laminate
2.1.8 Hardware
2.1.8.1 Hinges
2.1.8.2 Locks
2.1.8.3 Shelf Standards
2.1.8.4 Drawer Slides
2.1.8.5 Pulls for Doors and Drawers
2.1.8.6 Grommets
2.1.8.7 Vanity Supports
2.1.8.8 Guest Room Closet Rods and Supports
2.1.9 Wood Filler
2.1.10 Not Used
2.1.11 Finishes
2.1.12 Woodwork Items (Refer to drawings for size, quantity and details)
2.1.12.1 Guest Room Mini bars
2.1.12.2 Guest Room Bathroom Vanities
2.1.12.3 Guestroom Closet Shelving
2.1.12.4 Window Stools
2.1.12.5 Not Used
2.1.12.6 Not Used
2.1.12.7 Not Used
2.1.12.8 Not Used
2.1.12.9 Not Used
2.1.12.10 Closet Shelving

2.1.12.11 Guest Suite 3-Drawer Chest
2.2 NAILS AND ANCHORS
2.3 Cultured Marble

PART 3 EXECUTION

3.1 GENERAL
3.2 WOOD TRIM
3.3 CULTURED MARBLE

-- End of Section Table of Contents --

SECTION 06200

FINISH CARPENTRY
09/96

PART 1 GENERAL

1.1 REFERENCES

The publications listed below form a part of this specification to the extent referenced. The publications are referred to in the text by basic designation only.

ARCHITECTURAL WOODWORK INSTITUTE (AWI)

AWI-02	(1994) Architectural Woodwork Quality Standard, Guide Specifications and Quality Certification Programs

1.2 SUBMITTALS

Government approval is required for submittals with a "GA" designation; submittals having an "FIO" designation are for information only. The following shall be submitted in accordance with Section 01330 SUBMITTAL PROCEDURES:

SD-01 Data;GA1

Manufacturer's printed data, catalog cuts, and installation instructions for all specialty items not manufactured by woodwork fabricator, including hardware.

Wood Items and Trim; FIO

Manufacturer's printed data indicating the usage of engineered or recycled wood products, and environmentally safe preservatives.

SD-04 Drawings

Finish Carpentry; GA1.

Drawings showing fabricated items and special mill and woodwork items. Drawings shall indicate materials and details of construction, methods of fastening, hardware, schedule of finishes, erection, and installation.

SD-14 Samples

Wood Trim; GA1. Plastic Laminate; GA1

Samples shall be of sufficient size to show patterns, color ranges, and types, as applicable, of all materials proposed to be used.

1.3 DELIVERY AND STORAGE

Deliver woodwork under cover. Protect from sub-zero temperatures during delivery. Do not deliver until drywall joint treatment and similar moisture producing materials have dried out for at least 15 days, or until relative humidity is less than 60%, and in cold weather, until heat has been provided for at least 10 days prior to delivery. Store indoors, in ventilated areas with constant minimum temperature of 15 degrees C (60 degrees F) and monitor relative humidity at the site between 25% and 55% before, during and after installation.

PART 2 PRODUCTS

2.1 WOOD ITEMS AND TRIM

The Contractor shall furnish products which optimize design by reducing the amount of wood used (engineered wood), or recycled wood products, and preservatives without arsenic or chromium when the products and methods are competitive in price or directed by the Contracting Officer.

2.1.1 Grading and Marking

Materials shall bear the grademark, stamp or other identifying marks indicating grades of material and rules or standards under which produced. Such identifying marks on a material shall be in accordance with the rule or standard under which the material is produced, including requirements for qualifications and authority of the inspection organization, usage of authorized identification, and information included in the identification. The inspection agency for lumber shall be certified by the Board of Review, American Lumber Standards Committee, to grade the species used. Except for plywood, structural-use panels, and lumber, bundle marking will be permitted in lieu of marking each individual piece. Surfaces that are to be architecturally exposed to view shall not bear grademarks, stamps, or other types of identifying marks.

2.1.2 Sizes and Patterns

Lumber sizes and patterns shall conform to rules or standards under which produced. Unless otherwise specified, lumber shall be surfaced on four sides. Sizes and patterns for materials other than lumber shall conform to requirements of the rules or standards under which produced. Size references, unless otherwise specified, are nominal sizes, and actual sizes shall be within manufacturing tolerances allowed by the standard under which the product is produced.

2.1.3 Moisture Content

The maximum moisture content of untreated trim and wood siding shall be 6 to 8 percent at the time of delivery to the jobsite and when installed. Moisture content of all other material shall be in accordance with the standard under which the product is produced.

2.1.4 Wood Species

Solid wood materials are to be graded in accordance with AWI-02 for grade of work specified. Provide Select White Birch with plain sawn grain, of a quality suitable for stained, transparent finish.

2.1.5 Not Used

2.1.6 Sheet Materials

2.1.6.1 Hardwood Plywood

Graded in accordance with AWI-02 for grade of work specified. Uniform White Maple species, with plain sliced grain, of quality suitable for stained, transparent finish.

2.1.6.2 Wood Particleboard / Fiberboard (MDF)

In accordance with ANSI O A208, with core composed of wood chips or sawdust and water resistant adhesive. in panels thick.

2.1.6.3 Hardboard

In accordance with ANSI A135.4, with pressed wood fiber with resin binder, tempered grade, thick, smooth one side, for use at drawer bottoms, gables, backs of casework and as indicated.

2.1.7 Veneer Materials

2.1.7.1 Wood Veneer

Uniform White Maple face species, plain sliced cut with grain suitable for stained, transparent finish and MDF particleboard core. Grade in accordance with AWI Custom standards. See individual woodwork items for additional information on cut and layout.

2.1.7.2 Low Pressure Laminate (Melamine)

For use at interior surfaces at casework. Texture to be matte finish and color to be white.

2.1.7.3 Plastic Laminate

In accordance with NEMA LD3, of type and construction to accommodate specified detailing. Refer to 09915 COLOR SCHEDULE for finish and color selections.

2.1.8 Hardware

2.1.8.1 Hinges

Hinges for swing doors to be self-closing, 125 degree flush overlay type with chrome finish.

2.1.8.2 Locks

Locks for casework to be 90 degree cam locks. Provide where indicated on drawings.

2.1.8.3 Shelf Standards

For built-in shelving within casework, provide 17 gauge aluminum, zinc finish, 5/8 inch wide, slotted pilaster standards for flush mounting. Provide with bent tab aluminum shelf supports in quantity appropriate for number of shelves required.

2.1.8.4 Drawer Slides

Provide 3/4 extension, low profile box drawer slide with 75 lb capacity. Height to be 62 mm (2-1/2 inches) including rail. Slides are to be rail mounted, with steel ball bearings, positive stop, and unhanded silenced in and out stops. Finish to be bright electro-zinc.

2.1.8.5 Pulls for Doors and Drawers

Typical pulls to be 75 mm (3 inch) high center to center, 8 mm (5/16 inch) diameter, wire pulls in brushed aluminum finish. Pulls for Guest Suite 3-Drawer Chest to be as noted on Drawing A7.6

2.1.8.6 Grommets

Grommets in countertops to be clear anodized aluminum or stainless steel material. Grommet holes to be in diameter with snap-on matching cover caps. Provide where indicated on drawings.

2.1.8.7 Vanity Supports

Heavy duty steel angle "L" bracket supports are to be 495mm (19 1/2")deep by 317mm (12 1/2")high,in white,epoxy-coated finish. Support to be equivalent to Knape and Vogt Model #208 WH500.

2.1.8.8 Guest Room Closet Rods and Supports

Closet rods shall be 26mm (1-1/16 inch) outside diameter, heavy duty steel tubing with a wall thickness of 2.7mm (.109"),chrome-look finish and end flange brackets for mounting to wood supports. Provide bright plated hangars of heavy gauge wire with closed hooks. Thread hooks on closet rod prior to installation. Provide eight hooks per guest room closet. Rod to be equivalent to Knape and Vogt Model #770 Heavy Duty Tubing. Rod end supports to be equivalent to Knape and Vogt Model #734 with a chrome look finish. NOTE: Intermediate rod supports will not be accepted.

2.1.9 Wood Filler

Provide filler as recommended by AWI-02.

2.1.10 Not Used

2.1.11 Finishes

Prefabricated woodwork items to be shop finished in accordance with AWI-02, Section 1500 (Systems). Finish work to meet AWI Custom Standards. Unless noted otherwise, all woodwork to be stained and finished per AWI System TR-2, Catalyzed Lacquer, with satin sheen. Refer to 09915 COLOR SCHEDULE for colors of stain.

2.1.12 Woodwork Items (Refer to drawings for size, quantity and details)

2.1.12.1 Guest Room Mini bars

Base cabinet shall have plastic laminate veneer on MDF core on all exposed-to-view faces, with plastic laminate veneer countertop with stained hardwood edge trim. Shelf above shall have plastic laminate veneer on all surfaces with stained hardwood edge trim. Back wall between countertop and shelf to have plastic laminate finish to match casework.

2.1.12.2 Guest Room Bathroom Vanities

Vanities shall have cultured marble vanity top, high apron (125 mm (5 inch) at accessible rooms),and high backsplash, and support as indicated. Provide and coordinate cut-outs for toilet paper dispenser and drop-in sink (sink by Mechanical).

2.1.12.3 Guestroom Closet Shelving

Shelf shall have plastic laminate veneer on MDF core for all surfaces, including edges, with stained hardwood front edge trim. Shelf to be edge-supported on three sides by wood cleats with plastic laminate veneer. Closet rod to be mounted onto wood cleats and to clear span the opening.

2.1.12.4 Window Stools

Window stools shall be cultured marble, 750mm (3/4") thick in a matte finish. Refer to 09915 COLOR SCHEDULE for colors of cultured marble.

2.1.12.5 Not Used

2.1.12.6 Not Used

2.1.12.7 Not Used

2.1.12.8 Not Used

2.1.12.9 Not Used

2.1.12.10 Closet Shelving

Shelving at linen and general storage rooms shall have plastic laminate veneer on all surfaces, including edges.

2.1.12.11 Guest Suite 3-Drawer Chest

Casework is designed to match funiture suppplied by Government under separate contract. Fabricate unit according to information and details shown on Drawing A7.6.

2.2 NAILS AND ANCHORS

Nails and anchors shall be the size and type best suited for the application and substrate.

2.3 Cultured Marble

Cultured marble to be a cast polymer product with simulated marble appearance conforming to requirements of ANSI Z 124-1995-Plastic Lavatory Units. Window sills shall be 19 mm (3/4 inch) thick in depth and lengths shown on drawings, with minimal joints. Vanities, aprons and backsplashes shall be 19 mm (3/4 inch) thick in sizes and configuration shown on drawings. Tub surrounds shall be 10 mm (3/8 inch) thick,trimless panels with single panels at tub ends and a maximum of two panels with center joint for side of tub. Provide 150 mm (6 inch) high by 200 mm (8 inch) wide surface mounted cultured marble soap dish in tub surrounds as indicated on drawings.

PART 3 EXECUTION

3.1 GENERAL

Fabricate and install woodwork in accordance with AWI Custom Quality Standards. Set and secure materials and components in place plumb and level. Carefully scribe work abutting other components, with maximum gaps of . Countersink anchorage devices at exposed locations, conceal with solid wood plugs of species to match surrounding wood and finish flush with surrounding surfaces. Install hardware in accordance with manufacturer's instructions.

3.2 WOOD TRIM

Interior wood trim shall be installed straight, plumb, level and with closely fitted joints. Exposed surfaces shall be machine sanded at the mill. Trim shall be coped at returns and interior angles and mitered at external corners. Blind nailing shall be used to the extent practical, and face nailing shall be set and stopped with a nonstaining putty to match the finish applied. Screws shall be used for attachment to meal; setting and stopping of screws shall be of the same quality as required where nails are used.

3.3 CULTURED MARBLE

Install cultured marble according to manufacturer's recommendations and in accordance with drawings.

-- End of Section --

SECTION TABLE OF CONTENTS

DIVISION 07 - THERMAL & MOISTURE PROTECTION

SECTION 07110

BITUMINOUS DAMPPROOFING

09/98

PART 1 GENERAL

1.1 REFERENCES
1.2 SUBMITTALS
1.3 QUALIFICATIONS
1.4 DELIVERY, STORAGE AND HANDLING

PART 2 PRODUCTS

2.1 EMULSION-BASED ASPHALT DAMPPROOFING
2.1.1 Fibrated Emulsion-Based Asphalt

PART 3 EXECUTION

3.1 SURFACE PREPARATION
3.1.1 Protection of Surrounding Areas
3.1.2 Masonry Surfaces
3.1.3 Concrete Surfaces
3.1.4 Metal Surfaces
3.2 APPLICATION OF BITUMINOUS DAMPPROOFING
3.2.1 Emulsion-Based Asphalt
3.3 CLEAN-UP
3.4 PROTECTION

-- End of Section Table of Contents --

SECTION 07110

BITUMINOUS DAMPPROOFING
09/98

PART 1 GENERAL

1.1 REFERENCES

The publications listed below form a part of this specification to the extent referenced. The publications are referred to in the text by basic designation only.

AMERICAN SOCIETY FOR TESTING AND MATERIALS (ASTM)

ASTM D 1227	(1995) Emulsified Asphalt Used as a Protective Coating for Roofing

1.2 SUBMITTALS

Government approval is required for submittals with a "GA" designation; submittals having an "FIO" designation are for information only. The following shall be submitted in accordance with Section 01330 SUBMITTAL PROCEDURES:

SD-13 Certificates

Materials; FIO.

Certificates attesting that the materials meet the requirements specified.

1.3 QUALIFICATIONS

Work shall be performed by skilled laborers thoroughly experienced in the type of bituminous dampproofing work specified to meet the requirements of the contract.

1.4 DELIVERY, STORAGE AND HANDLING

Dampproofing materials shall be delivered to the project site in the original sealed containers bearing the name of manufacturer, contents and brand name, and stored in a weathertight enclosure to prevent moisture damage and absorption. Dampproofing materials shall be protected from freezing. Asphalt shall be stored off the ground on pallets, and covered on top and all sides with breathable-type canvas tarpaulins. Plastic sheets cause condensation buildup; and therefore, shall not be used to cover dampproofing materials. Care shall be taken during storage to avoid separation or settlement of the emulsion components. Damaged or deteriorated materials shall be removed from the project site.

PART 2 PRODUCTS

2.1 EMULSION-BASED ASPHALT DAMPPROOFING

2.1.1 Fibrated Emulsion-Based Asphalt

Fibrated emulsion-based asphalt dampproofing shall be cold-applied type conforming to ASTM D 1227 Type IV, asbestos-free, manufactured of refined asphalt, emulsifiers and selected clay, fibrated with mineral fibers. For brush application, emulsion shall contain a minimum of 59 percent solids by weight, 56 percent solids by volume. For trowel application, emulsion shall contain a minimum of 58 percent solids by weight, 55 percent solids by volume.

PART 3 EXECUTION

3.1 SURFACE PREPARATION

Surfaces scheduled for bituminous dampproofing shall be prepared in accordance with dampproofing manufacturer's recommendations. Surface preparation shall be approved prior to dampproofing application.

3.1.1 Protection of Surrounding Areas

Before starting the dampproofing work, the surrounding areas and surfaces shall be protected from spillage and migration of asphalt onto other work. Drains and conductors shall be protected from clogging with asphalt.

3.1.2 Masonry Surfaces

Surfaces shall be free of oil, grease, dirt, laitance, loose material, frost, debris and other contaminants. Mortar joints shall be flush and free of extraneous mortar and chipped or broken masonry.

3.1.3 Concrete Surfaces

Surfaces shall be properly cured, free of form release agents, oil, grease, dirt, laitance, loose material, frost, debris and other contaminants. Form ties shall be cut flush with surface. Sharp protrusions and form match lines shall be removed. Holes, voids, spalled areas and cracks which can damage the dampproofing materials and impair performance shall be repaired. Rough surfaces shall be parged with a well-adhering coat of cement mortar.

3.1.4 Metal Surfaces

Metal surfaces shall be dry and be free of rust, scale, loose paint, oil, grease, dirt, frost and debris.

3.2 APPLICATION OF BITUMINOUS DAMPPROOFING

3.2.1 Emulsion-Based Asphalt

Emulsion-based asphalt dampproofing work shall not be performed in temperatures below 40 degrees F. Emulsions shall have a smooth and uniform consistency at time of application. Dampproofing materials shall be applied in accordance with manufacturer's published instructions to produce a smooth uniform dry film of not less than thick without voids or defects. Dull or porous spots shall be recoated. Dampproofing materials shall seal tightly around pipes and other items projecting through dampproofing. Rates of application shall be as follows:

a. Primer: cold-applied.

b. Fibrated Dampproofing: cold-applied with, brush or trowel.

3.3 CLEAN-UP

Surfaces of other work which are stained with dampproofing materials shall be cleaned with a cleaner recommended by dampproofing manufacturer.

3.4 PROTECTION

The completed dampproofing work shall be protected from damage during and after construction.

-- End of Section --

SECTION TABLE OF CONTENTS

DIVISION 07 - THERMAL & MOISTURE PROTECTION

SECTION 07131

ELASTOMERIC MEMBRANE WATERPROOFING

09/98

PART 1 GENERAL

1.1 REFERENCES
1.2 SUBMITTALS
1.3 DELIVERY, STORAGE, AND HANDLING

PART 2 PRODUCTS

2.1 MATERIALS
2.1.1 Performance Requirements
2.1.1.1 Not Used
2.1.1.2 Not Used
2.1.1.3 Composite Self-Adhering Membrane
2.1.1.4 Not Used
2.1.1.5 Not Used
2.1.1.6 Not Used
2.1.2 Protection Board
2.2 ACCESSORIES

PART 3 EXECUTION

3.1 PREPARATION
3.2 APPLICATION
3.2.1 Not Used
3.2.2 Not Used
3.2.3 Composite Self-Adhering Membrane Installation
3.2.4 Not Used
3.2.5 Not Used
3.3 TESTS
3.4 PROTECTION
3.4.1 Projections
3.4.2 Counterflashing
3.4.3 Expansion Joints and Fillets
3.4.4 Vertical Membrane Waterproofing
3.4.5 Not Used

-- End of Section Table of Contents --

SECTION 07131

ELASTOMERIC MEMBRANE WATERPROOFING
09/98

PART 1 GENERAL

1.1 REFERENCES

The publications listed below form a part of this specification to the extent referenced. The publications are referred to in the text by basic designation only.

AMERICAN SOCIETY FOR TESTING AND MATERIALS (ASTM)

ASTM E 96	(1995) Water Vapor Transmission of Materials
ASTM E 154	(1988; R 1993) Water Vapor Retarders Used in Contact with Earth Under Concrete Slabs, on Walls, or as Ground Cover
ASTM G 21	(1990) Determining Resistance of Synthetic Polymeric Materials to Fungi

1.2 SUBMITTALS

Government approval is required for submittals with a "GA" designation; submittals having an "FIO" designation are for information only. The following shall be submitted in accordance with Section 01330 SUBMITTAL PROCEDURES:

SD-04 Drawings

Waterproofing System; GA.

Detail drawings showing size of sheets, position of sheets and splices, flashing and termination details, and expansion joint details.

SD-06 Instructions

Installation; FIO.

Manufacturer's instructions for installation of the elastomeric membrane, including procedures for preparing the membrane for use, flashing, and splicing. Instructions shall include recommended or required protective covering and procedures for safe handling and use of cleaners, adhesives, and sealants.

SD-13 Certificates

Materials; FIO.

Certificates of compliance attesting that the materials meet specification requirements. Certificates may show qualification of the identical

compound in the specified test.

1.3 DELIVERY, STORAGE, AND HANDLING

Materials shall be delivered to the job site in unopened containers bearing the manufacturer's name, brand name, and description of contents. Membrane, flashing, and adhesives shall be stored in clean, dry areas. Storage temperature for adhesives shall be between 60 and 80 degrees F. Protection board shall be stored flat and off the ground.

PART 2 PRODUCTS

2.1 MATERIALS

Adhesives, mastics, cements, tapes, and primers shall be as recommended by the membrane manufacturer and shall be compatible with the material to which they are to be bonded.

2.1.1 Performance Requirements

All membranes shall meet the following requirements when tested by the referenced ASTM standards:

ASTM E 154 Puncture Resistance	40 pounds, (min.)
ASTM E 96, Procedure B Water Vapor Transmission at 80 degrees F Permeance	0.25 perms (max.)
ASTM G 21 or ASTM E 154 Resistance to Soil Bacteria or Fungi	No sustained growth or discoloration after 21 days

2.1.1.1 Not Used

2.1.1.2 Not Used

2.1.1.3 Composite Self-Adhering Membrane

Self-adhesive waterproofing sheet membrane composed of rubberized asphalt, laminated to a high strength, cross laminated polyethylene sheet; minimum total thickness of 1.524 mm (0.060"). Acceptable manufacturers include W. R. Grace & Company, W.R. Meadows, Inc. or Miradri.

2.1.1.4 Not Used

2.1.1.5 Not Used

2.1.1.6 Not Used

2.1.2 Protection Board

Protection board for waterproofing membrane shall be premolded bituminous protection board; (1/8 inch)thick for vertical surfaces, and (1/4 inch) thick for horizontal surfaces.

2.2 ACCESSORIES

Flashing, counterflashing, expansion joint covers and corner fillets shall be as recommended by the membrane manufacturer.

PART 3 EXECUTION

3.1 PREPARATION

Surfaces to which waterproofing is to be applied shall be clean, smooth, and free from deleterious materials and projections. Holes, honeycomb, cracks, or cavities shall be pointed or filled and finished flush with Portland cement mortar. Top surfaces of projecting masonry or concrete ledges below grade, except footings, shall be beveled. Before waterproofing is applied, the surfaces to be covered shall be swept to remove all dust and foreign matter. Concrete surfaces shall be cured 30 days prior to receiving elastomeric waterproofing and shall not be cured with compounds containing wax or oil. Masonry surfaces to be waterproofed shall have joints struck flush.

3.2 APPLICATION

Waterproofing shall not be applied to wet surfaces. The ambient and surface temperatures shall be above (40 degrees F) during application. Membrane under slabs shall be carried up abutting vertical surfaces to the level of finish of floor or to within 1/2 inch) of the top edge of base where base is shown and cemented solid to the substrate. Membrane shall not be continuous through walls, floors, piers, and columns unless otherwise shown. Concrete surfaces shall be primed to receive the membrane. Membranes shall be handled and installed in accordance with the approved installation instructions. Primers, adhesives, and mastics shall be applied in accordance with the membrane manufacturer's printed instructions. Laps shall be oriented so that water will flow over the lap, and not into them. As soon as the mastic is fully set and dry, joints shall be checked. Where any openings or fishmouths appear, joints shall be resealed and rerolled. Wrinkles and buckles shall be avoided in applying membrane and joint reinforcement. Nonadhering membranes shall be unrolled and allowed to remain flat for at least 2 hours before application. Membranes shall be drawn tight during installation without stretching. Self-adhering membrane shall be installed by removing the release sheets on the back of the membrane and applying the tacky surface onto the primed surface. Laps and splices shall be sealed prior to completion of a day's work.

3.2.1 Not Used

3.2.2 Not Used

3.2.3 Composite Self-Adhering Membrane Installation

On vertical surfaces, membrane shall be applied in lengths up to (8 feet starting at the bottom. Each sheet shall be lapped at edges and ends a minimum of (2-1/2 inches) over the preceding sheets. The membrane shall be rolled to adhere with the substrate. Corners and joints shall be double-covered by first applying a (12 inch) width of membrane centered along the corner or joint. Inside and outside corners shall then be covered with membrane. Exposed termination edges of membrane on horizontal or vertical surfaces shall be finished with a troweled bead of mastic. Mastic shall be applied around termination edges of membrane and around drains and projections. Mastic shall be applied at the termination of each

day's work.

3.2.4 Not Used

3.2.5 Not Used

3.3 TESTS

When required, and after the system is cured, the membranes on horizontal surfaces shall be tested by flooding the entire waterproofed area with a minimum of 2 inches head of water for a period of 24 hours. There shall be no water added after the start of the period. Water level shall be measured at the beginning and at the end of the 24 hour period. If the water level falls, remove the water and inspect the waterproofing membrane. Leak sites shall be marked, dried and repaired, and the test shall be repeated.

3.4 PROTECTION

Horizontal applications of membrane shall be protected from traffic during installation. No equipment shall be allowed directly on the membrane. Plywood, or similar material, overlayment shall be provided for wheel-ways. Walkways shall be provided where heavy traffic from other trades is expected. Materials shall not be stored on the membrane. A protective covering shall be installed over the membrane immediately after installation or testing. If membrane is to be exposed, a temporary covering shall be applied to protect the membrane until the protection board is installed.

3.4.1 Projections

Projections passing through membrane shall be flashed as recommended by the manufacturer of the waterproofing membrane.

3.4.2 Counterflashing

Waterproofing connecting with work exposed to the weather shall be counterflashed to form a watertight connection. Upper edge of membrane waterproofing and protective covering shall be counterflashed.

3.4.3 Expansion Joints and Fillets

Expansion joints and corner fillets shall be installed as recommended by the manufacturer of the waterproofing membrane.

3.4.4 Vertical Membrane Waterproofing

Waterproofing shall be protected with a 3 mm (1/8 inch) compatible water-resistant (bitumen type) protection board. Edges of protection shall be butted, and exposed surfaces shall be covered by a coating of bitumen.

3.4.5 Not Used

-- End of Section --

SECTION TABLE OF CONTENTS

DIVISION 07 - THERMAL & MOISTURE PROTECTION

SECTION 07220

ROOF INSULATION

05/96

PART 1 GENERAL

1.1 REFERENCES
1.2 SUBMITTALS
1.3 STORAGE OF MATERIALS
1.4 FIRE CLASSIFICATION

PART 2 PRODUCTS

2.1 Not Used
2.2 INSULATION
2.2.1 Not Used
2.2.2 Not Used
2.2.3 Not Used
2.2.4 Fiberboard
2.2.5 Not Used
2.2.6 Polyisocyanurate
2.3 NAILS AND FASTENERS
2.3.1 Not Used
2.3.2 Fasteners
2.3.3 Metal Disks
2.4 Not Used
2.5 Not Used
2.6 Not Used
2.7 WOOD NAILERS
2.8 Vapor Retarder

PART 3 EXECUTION

3.1 COORDINATION REQUIREMENTS
3.2 ENVIRONMENTAL CONDITIONS
3.3 SUBSTRATE PREPARATION
3.4 HEATING OF ASPHALT Not Used
3.5 VAPOR RETARDER
3.5.1 General Application
3.5.2 Edge Requirements
3.6 INSTALLATION OF WOOD NAILERS
3.7 APPLICATION OF INSULATION
3.7.1 Mechanical Fastening
3.7.2 Steel Decks
3.7.3 Foam Insulation
3.7.4 Not Used
3.7.5 Protection Requirements
3.8 INSPECTION

-- End of Section Table of Contents --

SECTION 07220

ROOF INSULATION
05/96

PART 1 GENERAL

1.1 REFERENCES

The publications listed below form a part of this specification to the extent referenced. The publications are referred to in the text by basic designation only.

AMERICAN SOCIETY FOR TESTING AND MATERIALS (ASTM)

ASTM C 208	(1995) Cellulosic Fiber Insulating Board
ASTM C 1289	(1995) Faced Rigid Cellular Polyisocyanurate Thermal Insulation Board
ASTM E 84	Test Method for Surface Burning Characteristics of Building Materials

FACTORY MUTUAL ENGINEERING AND RESEARCH (FM)

FM P9513	(1996) Loss Prevention Data for Roofing Contractors
FM P7825a	(1998) Approval Guide Fire Protection
FM P7825c	(1998) Approval Guide Building Materials

UNDERWRITERS LABORATORIES (UL)

UL Bld Mat Dir	(1998) Building Materials Directory

1.2 SUBMITTALS

Government approval is required for submittals with a "GA" designation; submittals having an "FIO" designation are for information only. The following shall be submitted in accordance with Section 01330 SUBMITTAL PROCEDURES:

SD-06 Instructions

Application of Insulation; FIO.

Insulation manufacturer's recommendations for the application and installation of insulation.

SD-08 Statements

Inspection; FIO.

The inspection procedure for insulation installation, prior to start of roof insulation work.

SD-13 Certificates

Insulation; FIO Vapor Retarder; FIO

Certificate attesting that the polyisocyanurate insulation contains recovered material and showing estimated percent of recovered material. Certificates of compliance for vapor retarder materials.

1.3 STORAGE OF MATERIALS

Insulation shall be kept dry at all times, before, during, and after delivery to the site and shall be stored in an enclosed building or in a closed trailer. Wet insulation, shall be permanently removed from the site.

1.4 FIRE CLASSIFICATION

Insulation shall have been tested as part of a roof construction assembly of the type used in this project and the construction shall be listed as Fire-Classified in UL Bld Mat Dir or Class I in FM P7825a, except for installation on precast concrete roof deck panels.

PART 2 PRODUCTS

2.1 Not Used

2.2 INSULATION

Insulation shall be a standard product of the manufacturer and shall be factory marked with the manufacturer's name or trade mark, the material specification number, the R-value at (75 degrees F), and the thickness. Minimum thickness shall be as recommended by the manufacturer. Boards shall be marked individually. The thermal resistance of insulation shall be not less than the R-value shown on the drawings. The insulation manufacturing process shall not include chlorofluoro carbons (CFC) or formaldehydes. Insulation and fiberboard shall contain the highest practicable percentage of material which has been recovered or diverted from solid waste (e.g., postconsumer waste), but not including material reused in a manufacturing process. Where two materials have comparable price and performance, the one having the higher recovered material content shall be selected. Insulation shall be one, or a combination of the following materials:

2.2.1 Not Used

2.2.2 Not Used

2.2.3 Not Used

2.2.4 Fiberboard

ASTM C 208 Type II, Grade 1 or 2, roof insulating board with a minimum recovered material content of 80 percent, treated with bituminous impregnation. Bituminous impregnation shall be limited to 4 percent by weight when used over steel decks. Board size to be by 13 mm (1/2 inch)

thick.

2.2.5 Not Used

2.2.6 Polyisocyanurate

ASTM C 1289 Type II, with fiber glass reinforced facer on both sides, and having minimum recovered material content of 9 percent by weight of the polyisocyanurate portion of the board. Insulation thickness shall be as shown on drawings.

2.3 NAILS AND FASTENERS

Nails and fasteners shall conform to the following requirements:

2.3.1 Not Used

2.3.2 Fasteners

Insulation manufacturer's recommendations except holding power, when driven, shall be not less than 40 pounds each in steel deck. Fasteners for steel or concrete decks shall conform to FM P7825c for Class I roof deck construction, and shall be spaced to withstand an uplift pressure of

2.3.3 Metal Disks

Flat and not less than thickness. Disks used with nails or fasteners for securing fiberboard insulation shall be minimum (1 inch) diameter. Disks used with nails or fasteners for securing other board insulation shall be minimum (2-1/8 inches) in diameter.

2.4 Not Used

2.5 Not Used

2.6 Not Used

2.7 WOOD NAILERS

Wood nailers shall conform to Section 06100 ROUGH CARPENTRY, including preservative treatment. Edge nailers shall be not less than nominal (6 inches) wide and of thickness to finish flush with the top surface of the insulation. Surface mounted nailers shall be a nominal (3 inches) wide by the full thickness of the insulation.

2.8 Vapor Retarder

Vapor retarder shall be a reinforced, 3 ply low density polyethylene general all-purpose fire retardant vapor barrier sheeting, with Class 1, Class A flame spread rating per ASTM E 84. Vapor retarder to have minimum puncture resistance of 129 N (29 pounds) when tested in accordance with ASTM D-4833 and a maximum permeance rating of 50 grains per hour when tested in accordance with ASTM E-96.

PART 3 EXECUTION

3.1 COORDINATION REQUIREMENTS

Insulation and roofing membrane shall be finished in one operation up to

the line of termination at the end of each day's work. Completed sections shall be waterproofed when more than one day is required to finish the roofing. Phased construction will not be permitted.

3.2 ENVIRONMENTAL CONDITIONS

Air temperature shall be above (40 degrees F) and there shall be no visible ice, frost, or moisture on the roof deck when the insulation and roofing are installed.

3.3 SUBSTRATE PREPARATION

The substrate construction of any bay or section of the building shall be completed before insulation or vapor retarder work is begun thereon. Vents and other items penetrating the roof shall be secured in position and properly prepared for flashing. Substrate surface shall be smooth, clean, and dry at time of application.

3.4 HEATING OF ASPHALT Not Used

3.5 VAPOR RETARDER

3.5.1 General Application

Vapor retarder shall be loose laid directly over steel or concrete deck, with field joints and penetrations taped with asphaltic mastic tape, recommended by vapor barrier manufacturer. All punctures and tears shall be repaired to maintain integrity of vapor barrier.3.5.2 Edge Requirements

At walls, eaves and rakes, the vapor retarder shall be extended onto the adjacent surface and sealed in place. At roof penetrations other than walls, eaves and rakes, the vapor retarder shall be extended to form a lap which shall later be folded back over the edge of the insulation and sealed in place..

3.6 INSTALLATION OF WOOD NAILERS

Nailers shall be secured to cast-in-place deck materials by not less than (3/8 inch) diameter anchors embedded in the deck not over (4 feet) on centers. Nailers shall be secured to precast deck materials and to steel decks as indicated. Bolt anchors shall have nuts and washers countersunk, and bolts shall be cut flush with top of nailer. Powder-actuated fasteners, sized and spaced for nailer anchorage equivalent to that specified and indicated, may be used when approved. Surface mounted nailers shall be installed parallel with the roof slope and shall be spaced not over (4 feet) face-to-face, except that where the insulation units are less than (4 feet) in length the nailers shall be spaced to minimize cutting of the insulation.

3.7 APPLICATION OF INSULATION

Insulation shall be laid in two or more layers. Units of insulation shall be laid in courses parallel with the roof slope. End joints shall be staggered and tightly butted. Insulation shall be cut to fit neatly against adjoining surfaces. Joints between insulation boards shall not exceed (1/4 inch). Joints in successive layers shall be staggered with respect to joints of preceding layer. Where insulation is applied over steel deck, long edge joints shall continuously bear on surfaces of the steel deck. Insulation to be mechanically secured to substrate.

Insulation which can be readily lifted after installation is not considered to be adequately secured. Insulation shall be applied so that all roof insulation applied each day is waterproofed the same day. Phased construction will not be permitted. Application of impermeable faced insulation shall be performed without damage to the facing.

3.7.1 Mechanical Fastening

Insulation shall be mechanically fastened. Method of attachment shall be in accordance with recommendations of the insulation manufacturer and wind uplift requirements specified.

3.7.2 Steel Decks

Uninsulated steel decks shall have insulation applied to span the steel deck flutes and to act as an underlayment for the roof membrane. Insulation on steel deck shall be compatible with mechanical fastening.

3.7.3 Foam Insulation

Polyisocyanurate insulation shall be isolated from the adhered elastomeric roof membrane by a separate layer of fiber board. Water-tight standing seam metal roofing may be installed directly over insulation board.

3.7.4 Not Used

3.7.5 Protection Requirements

The insulation shall be kept dry at all times. Insulation boards shall not be kicked into position. Exposed edges of the insulation shall be protected by cutoffs at the end of each work day or whenever precipitation is imminent. Cutoffs shall be as described in Section 07530. Cutoffs shall be removed when work is resumed. Edges of insulation at open spaces between insulation and parapets or other walls and spaces at curbs, scuttles, and expansion joints, shall be protected until permanent roofing and flashing is applied. Storing, walking, wheeling, or trucking directly on insulation or on roofed surfaces will not be permitted. Smooth, clean board or plank walkways, runways, and platforms shall be used, as necessary to distribute weight to conform to indicated live load limits of roof construction

3.8 INSPECTION

The Contractor shall establish and maintain an inspection procedure to assure compliance of the installed roof insulation with the contract requirements. Any work found not to be in compliance with the contract shall be promptly removed and replaced or corrected in an approved manner. Quality control shall include, but not be limited to, the following:

a. Observation of environmental conditions; number and skill level of insulation workers; start and end time of work.

b. Verification of certification, listing or label compliance with FM P9513.

c. Verification of proper storage and handling of insulation and vapor retarder materials before, during, and after installation.

d. Inspection of vapor retarder application, including edge envelopes

and mechanical fastening.

e. Inspection of mechanical fasteners; type, number, length, and spacing.

f. Coordination with other materials, cants, sleepers, and nailing strips.

g. Inspection of insulation joint orientation and laps between layers, joint width and bearing of edges of insulation on deck.

h. Installation of cutoffs and proper joining of work on subsequent days.

i. Continuation of complete roofing system installation to cover insulation installed same day.

-- End of Section --

SECTION TABLE OF CONTENTS

DIVISION 07 - THERMAL & MOISTURE PROTECTION

SECTION 07413

METAL SIDING

07/97

PART 1 GENERAL

1.1 REFERENCES
1.2 GENERAL REQUIREMENTS
1.2.1 Design
1.2.2 Architectural Considerations
1.3 SUBMITTALS
1.4 DELIVERY AND STORAGE
1.5 WARRANTIES

PART 2 PRODUCTS

2.1 SIDING
2.1.1 Internal and External Corners
2.1.2 Trim, Closure or End Caps, Flashings, Base and Trim
2.1.3 Wall Panels
2.2 FACTORY COLOR FINISH
2.2.1 Not Used
2.2.2 Formability Test
2.2.3 Accelerated Weathering, Chalking Resistance and Color Change
2.2.4 Humidity Test
2.2.5 Impact Resistance
2.2.6 Abrasion Resistance Test
2.3 ACCESSORIES
2.4 FASTENERS
2.4.1 Screws
2.4.2 End-Welded Studs
2.4.3 Explosive Actuated Fasteners
2.4.4 Blind Rivets
2.4.5 Bolts
2.5 INSULATION
2.5.1 Blanket Insulation
2.5.2 Insulating Sheathing
2.6 VAPOR RETARDER
2.7 EXTERIOR SHEATHING
2.8 SEALANT
2.9 GASKETS AND INSULATING COMPOUNDS

PART 3 EXECUTION

3.1 INSTALLATION
3.1.1 Siding and Accessories
3.1.1.1 Lap Type Panels with Exposed Fasteners

-- End of Section Table of Contents --

SECTION 07413

METAL SIDING
07/97

PART 1 GENERAL

1.1 REFERENCES

The publications listed below form a part of this specification to the extent referenced. The publications are referred to in the text by basic designation only.

ALUMINUM ASSOCIATION (AA)

AA-02	(1994) Aluminum Design Manual: Specifications and Guidelines for Aluminum Structures

AMERICAN SOCIETY FOR TESTING AND MATERIALS (ASTM)

ASTM B 209	(1996) Aluminum and Aluminum-Alloy Sheet and Plate
ASTM D 522	(1993a) Mandrel Bend Test of Attached Organic Coatings
ASTM D 968	(1993) Abrasion Resistance of Organic Coatings by Falling Abrasive
ASTM D 2244	(1993) Calculation of Color Differences from Instrumentally Measured Color Coordinates
ASTM D 2247	(1994) Testing Water Resistance of Coatings in 100% Relative Humidity
ASTM D 2794	(1993) Resistance of Organic Coatings to the Effects of Rapid Deformation (Impact)
ASTM D 3359	(1995) Measuring Adhesion by Tape Test
ASTM D 4214	(1989) Evaluating the Degree of Chalking of Exterior Paint Films
ASTM D 4587	(1991) Conducting Tests on Paint and Related Coatings and Materials Using a Fluorescent UV-Condensation Light- and Water- Exposure Apparatus

AMERICAN SOCIETY OF CIVIL ENGINEERS (ASCE)

ASCE 7	(1995) Minimum Design Loads for Buildings and Other Structures

1.2 GENERAL REQUIREMENTS

1.2.1 Design

Criteria, loading combinations, and definitions shall be in accordance with ASCE 7. Maximum calculated fiber stress shall not exceed the allowable value in the AISI or AA manuals; a one third overstress for wind is allowed. Midspan deflection under maximum design loads shall be limited to L/180. Contract drawings show the design wind loads and the extent and general assembly details of the metal siding. Members and connections not shown on the drawings shall be designed by the Contractor. Siding panels and accessories shall be the products of the same manufacturer. . Aluminum siding design shall be in accordance with AA-02.

1.2.2 Architectural Considerations

Panels profile shall be as shown on the drawings.

1.3 SUBMITTALS

Government approval is required for submittals with a "GA" designation; submittals having an "FIO" designation are for information only. The following shall be submitted in accordance with Section 01330 SUBMITTAL PROCEDURES:

SD-04 Drawings

Siding; GA1.

Drawings consisting of catalog cuts, design and erection drawings, shop coating and finishing specifications, and other data as necessary to clearly describe design, materials, sizes, layouts, construction details, fasteners, and erection. Drawings shall be accompanied by engineering design calculations for the siding panels.

SD-13 Certificates

Siding; FIO. Installation; FIO. Accessories; FIO.

Certificates attesting that the panels and accessories conform to the requirements specified. Certified laboratory test reports showing that the sheets to be furnished are produced under a continuing quality control program and that a representative sample consisting of not less than 5 pieces has been tested and has met the quality standards specified for factory color finish. Mill certification for structural bolts, siding, and wall liner panels.

SD-14 Samples

Siding; GA1.

One piece of each type and finish (exterior and interior) to be used, minimum (12 inches) long, full width.

Fasteners; FIO.

Two samples of each type to be used with statement regarding intended use.

Sealant; FIO.

One sample, approximately (1 pound), with descriptive data and color selection.

1.4 DELIVERY AND STORAGE

Materials shall be delivered to the site in a dry and undamaged condition and stored out of contact with the ground. Materials shall be covered with weathertight coverings and kept dry. Storage accommodations for metal siding shall provide good air circulation and protection from surface staining.

1.5 WARRANTIES

The Contractor shall provide a weather tight warranty for the metal siding for a period of 20 years to include siding panel assembly, 10 years against the wear of color finish, and 10 years against the corrosion of fasteners caused by ordinary wear and tear by the elements. The warranties shall start upon final acceptance of the work or the date the Government takes possession, whichever is earlier.

PART 2 PRODUCTS

2.1 SIDING

Panels shall be aluminum and shall have a factory color finish. Profile depth to be 25 mm (1 inch) and rib pitch to be 100 mm (4 inch), equivalent to "4 Rib" manufactured by Reynolds Architectural Products. Ribbed wall panels shall be fastened to framework using exposed or concealed fasteners. Length of sheets shall be sufficient to cover the entire height of any unbroken wall surface when length of run is (30 feet) or less. When length of run exceeds (30 feet), each sheet in the run shall extend over two or more spans. Sheets longer than (30 feet) may be furnished if approved by the Contracting Officer. Width of sheets with overlapping configurations shall provide not less than (44 inches) of coverage in place. Wall panels shall have edge configurations for overlapping adjacent sheets.

2.1.1 Internal and External Corners

Same materials, thickness, and finish as siding; of profile to suit system; brake formed shop cut and factory mitered to required angles. Outside corners are to be mitered.

2.1.2 Trim, Closure or End Caps, Flashings, Base and Trim

Same material, thickness, and finish, where exposed, as sheet stock. Brake form to required profiles.

2.1.3 Wall Panels

Aluminum Alloy 3004 conforming to ASTM B 209, temper as required for the forming operation, minimum (0.040 inch) thick. Surface to be stucco embossed, and factory pre-painted by the coil-coating process.

2.2 FACTORY COLOR FINISH

Panels shall have a factory applied manufacturer's standard 2-coat, thermocured system composed of specially formulated inhibitive primer and custom colored fluoropolymer color topcoat containing not less than 70

percent polyvinylidene floride resin by weight with a total minimum dry film thickness of 0.023 mm (0.9 mil) and 30 percent reflective gloss when tested according to ASTM D 523. Finish to be on the exposed side. Color shall be as specified in Section 09915 COLOR SCHEDULE. The interior color finish shall consist of a backer coat with a dry film thickness of (0.5 mil). The exterior color finish shall meet the test requirements specified below.

2.2.1 Not Used

2.2.2 Formability Test

When subjected to testing in accordance with ASTM D 522 Method B, (1/8 inch) diameter mandrel, the coating film shall show no evidence of fracturing to the naked eye.

2.2.3 Accelerated Weathering, Chalking Resistance and Color Change

A sample of the sheets shall be tested in accordance with ASTM D 4587. The coating shall withstand the weathering test without cracking, peeling, blistering, loss of adhesion of the protective coating, or corrosion of the base metal. Protective coating that can be readily removed from the base metal with tape in accordance with ASTM D 3359, Test Method B, shall be considered as an area indicating loss of adhesion. Following the accelerated weathering test, the coating shall have a chalk rating not less than No. 8 in accordance with ASTM D 4214 test procedures, and the color change shall not exceed 5 CIE or Hunter Lab color difference (delta E) units in accordance with ASTM D 2244.

2.2.4 Humidity Test

When subjected to a humidity cabinet test in accordance with ASTM D 2247 for 3000 hours, a scored panel shall show no signs of blistering, cracking, creepage or corrosion.

2.2.5 Impact Resistance

Factory-painted sheet shall withstand direct and reverse impact in accordance with ASTM D 2794 (0.500 inch diameter hemispherical head indenter, equal to (1.5 times the metal thickness in mils, expressed in inch-pounds), with no loss of adhesion.

2.2.6 Abrasion Resistance Test

When subjected to the falling sand test in accordance with ASTM D 968, Method A, the coating system shall withstand a minimum of [50] [80] liters of sand before the appearance of the base metal. The term "appearance of base metal" refers to the metallic coating on steel or the aluminum base metal.

2.3 ACCESSORIES

Wall flashing, sill flashing at PTAC unit, soffit trim, metal closure strips, caps, and similar metal siding accessories shall be the manufacturer's standard products. Exposed metal accessories shall be finished to match the panels furnished. Molded closure strips shall be bituminous-saturated fiber, closed-cell or solid-cell synthetic rubber or neoprene, or polyvinyl chlorided premolded to match configuration of the panels and shall not absorb or retain water.

2.4 FASTENERS

Fasteners for aluminum panels shall be manufacturer's standard system in aluminum or corrosion resisting steel. Fasteners for attaching wall panels to supports shall provide both tensile and shear strength of not less than (750 pounds) per fastener. Fasteners for accessories shall be the manufacturer's standard. Exposed wall fasteners shall be color finished or provided with color caps to match the panels.

2.4.1 Screws

Screws shall be as recommended by the manufacturer.

2.4.2 End-Welded Studs

Automatic end-welded studs shall be shouldered type with a shank diameter of not less than (3/16 inch) and cap or nut for holding panels against the shoulder.

2.4.3 Explosive Actuated Fasteners

Fasteners for use with explosive actuated tools shall have a shank of not less than (0.145 inch) with a shank length of not less than (1/2 inch) for fastening panels to steel and not less than (1 inch) for fastening panels to concrete.

2.4.4 Blind Rivets

Blind rivets shall be aluminum with (3/16 inch) nominal diameter shank or stainless steel with (1/8 inch) nominal diameter shank. Rivets shall be threaded stem type if used for other than the fastening of trim. Rivets with hollow stems shall have closed ends.

2.4.5 Bolts

Bolts shall be not less than (1/4 inch) diameter, shouldered or plain shank as required, with proper nuts.

2.5 INSULATION

Thermal resistance of insulation shall be not less than the R-values shown on the contract drawings. R-values shall be determined at a mean temperature of (75 degrees F) in accordance with ASTM C 518. Insulation shall be a standard product with the insulation manufacturer, factory-marked or identified with insulation manufacturer's name or trademark and R-value. Identification shall be on individual pieces or individual packages.

2.5.1 Blanket Insulation

Insulation placed between the steel studs shall be batt or blanket type glass fiber conforming to ASTM C 665, Type I. Insulation shall have a flame spread not in excess of 75 and a smoke developed rating not in excess of 150 when tested in accordance with ASTM E 84. The stated R-value of the insulation shall be certified by an independent Registered Professional Engineer if tests are conducted in the insulation manufacturer's laboratory.

2.5.2 Insulating Sheathing

Insulating sheathing shall be provided at wall cavities at metal stud walls as indicated on drawings. Insulating sheathing shall comply with ASTM C1289, Type 1, Class 1 and shall polyisocyanurate foam core with a reinforced radiant barrier aluminum foil facer bonded to each side. Insulating sheathing shall be provided in 1200 by 2400 mm (4 by 8 foot) rigid boards and in thickness as indicated on drawings. Facers for insulating sheathing shall serve as the moisture barrier in cavity wall construction when joints are fully taped and sealed.

2.6 VAPOR RETARDER

The vapor retarder shall be polyethylene film conforming to ASTM D 2103, 0.15 mm (6 mil) minimum thickness.

2.7 EXTERIOR SHEATHING

Exterior gypsum sheathing that is installed on the exterior side of the cold-formed steel framing system shall have a minimum thickness of 13 mm (1/2 inch) and shall be 1.2 m (4 feet) wide. Gypsum sheathing shall conform to ASTM C79/C79M. Gypsum sheathing shall have a water-resistant gypsum core with a water-repellent paper firmly bonded to the core.

2.8 SEALANT

Sealant shall be an elastomeric type containing no oil or asphalt. Exposed sealant shall be colored to match the applicable building color and shall cure to a rubberlike consistency.

2.9 GASKETS AND INSULATING COMPOUNDS

Gaskets and insulating compounds shall be nonabsorptive and suitable for insulating contact points of incompatible materials. Insulating compounds shall be nonrunning after drying.

PART 3 EXECUTION

3.1 INSTALLATION

Installation shall be in accordance with the manufacturer's erection instructions and drawings. Dissimilar materials which are not compatible when contacting each other shall be insulated from each other by means of gaskets or insulating compounds. Improper or mislocated drill holes shall be plugged with an oversize screw fastener and gasketed washer; however, panels with an excess of such holes or with such holes in critical locations shall not be used. Exposed surfaces and edges shall be kept clean and free from sealant, metal cuttings, hazardous burrs, and other foreign material. Stained, discolored, or damaged sheets shall be removed from the site.

3.1.1 Siding and Accessories

Siding shall be applied with the ribs in the horizontal position. Accessories shall be fastened into framing members, except as otherwise approved. Closure strips shall be provided as indicated and where necessary to provide weathertight construction.

3.1.1.1 Lap Type Panels with Exposed Fasteners

End laps shall be made over framing members with fasteners into framing members approximately (2 inches) from the end of the overlapping sheet. Side laps shall be laid away from the prevailing winds. Spacing of fasteners shall present an orderly appearance and shall not exceed: (8 inches) on center at end laps of siding, (8 inches) on center at connection of siding to intermediate supports, and (16 inches) on center at side laps of siding except when otherwise approved. Side and end laps of siding and joints at accessories shall be sealed. Fasteners shall be installed in straight lines within a tolerance of (1/2 inch) in the length of a bay. Fasteners shall be driven normal to the surface and to a uniform depth to seat the gasketed washers properly.

-- End of Section --

SECTION TABLE OF CONTENTS

DIVISION 07 - THERMAL & MOISTURE PROTECTION

SECTION 07421

COMPOSITE METAL BUILDING PANELS

mm/yy

PART 1 GENERAL

1.1 REFERENCES
1.2 GENERAL REQUIREMENTS
1.2.1 System Description
1.2.2 Performance
1.2.2.1 [Enter Appropriate Subpart Title Here]
1.2.3 QUALITY ASSURANCE
1.2.3.1 Fabricator and Installer Qualifications
1.2.3.2 Quality Standards
1.2.3.3 Fabrication
1.2.3.4 Strength Integrity
1.2.3.5 Fire Rating
1.3 SUBMITTALS
1.4 DELIVERY AND STORAGE
1.5 FIELD VERIFICATION
1.6 WARRANTIES
1.6.1 Warranty
1.7 [Enter Appropriate Subpart Title Here]

-- End of Section Table of Contents --

SECTION 07421

COMPOSITE METAL BUILDING PANELS

mm/yy

PART 1 GENERAL

1.1 REFERENCES

The publications listed below form a part of this specification to the extent referenced. The publications are referred to in the text by basic designation only.

ALUMINUM ASSOCIATION (AA)

AA-02	(1994) Aluminum Design Manual: Specifications and Guidelines for Aluminum Structures

AMERICAN SOCIETY FOR TESTING AND MATERIALS (ASTM)

ASTM B 209	(1996) Aluminum and Aluminum-Alloy Sheet and Plate
ASTM D 522	(1993a) Mandrel Bend Test of Attached Organic Coatings
ASTM D 968	(1993) Abrasion Resistance of Organic Coatings by Falling Abrasive
ASTM D 2244	(1993) Calculation of Color Differences from Instrumentally Measured Color Coordinates
ASTM D 2247	(1994) Testing Water Resistance of Coatings in 100% Relative Humidity
ASTM D 2794	(1993) Resistance of Organic Coatings to the Effects of Rapid Deformation (Impact)
ASTM D 3359	(1995) Measuring Adhesion by Tape Test
ASTM D 4214	(1989) Evaluating the Degree of Chalking of Exterior Paint Films
ASTM D 4587	(1991) Conducting Tests on Paint and Related Coatings and Materials Using a Fluorescent UV-Condensation Light- and Water- Exposure Apparatus

1.2 GENERAL REQUIREMENTS

1.2.1 System Description

Preformed and prefinished composite metal facing panel system of vertical

profile; shop fabricated and site installed with complete furred framing/anchorage assembly. Composite panel system must be provided by panel manufacturer's authorized architectural distributor, fabricator and installer. Contract documents must be adhered to for acceptance of the panel system. Aluminum panel design shall be in accordance with AA-02.

1.2.2 Performance1.2.2.1 [Enter Appropriate Subpart Title Here]

Preformed metal panel system to withstand code imposed design loads. Maximum allowable deflection of span: 1/180. System to accommodate movement of components without buckling, failure of joint seals, undue stress on fasteners, or other detrimental effects, when subject to seasonal temperature ranges. System to accommodate tolerance of structure. Provide positive drainage to exterior for moisture entering or condensation occurring within panel system.

1.2.3 QUALITY ASSURANCE

1.2.3.1 Fabricator and Installer Qualifications

Fabricator must have a minimum of five years experience as a manufacturer's authorized distributor, fabricator and installer, specializing in performing work of this Section, with documented experience for projects of this scope and within this climatic region.

1.2.3.2 Quality Standards

Highest standard of workmanship available to the industry in fabrication and installation of the composite panels specified is required. Standard general construction dimensional deviations will not be acceptable on this project.

1.2.3.3 Fabrication

Composite panels shall be totally shop fabricated. No field fabrication will be acceptable. All panels are to arrive on job-site formed and ready for proper attachment method and installation.

1.2.3.4 Strength Integrity

Panels must be tested to ASTM criteria D-1781-76 for bond integrity, simulating its resistance to delamination, with minimum values of the following:

Bond Strength	214 psi (Vertical Pull / ASTM C-247)
Peel Strength	115 Nmm/mm

1.2.3.5 Fire Rating

Where panels are included in a wall system which is required to provide a rated fire resistance, provide panels wich comply with code requirements.

1.3 SUBMITTALS

Government approval is required for submittals with a "GA" designation; submittals having an "FIO" designation are for information only. The following shall be submitted in accordance with Section 01330 SUBMITTAL PROCEDURES:

SD-01 Data

Calculations; FIO

Submit product engineering design calculations indicating assembled panel structural capabilities and all necessary support and accessory components.

SD-04 Drawings

Panel System; GA1.

Drawings consisting of design and erection drawings, shop coating and finishing specifications, and other data as necessary to clearly describe design, materials, sizes, layouts, construction details, fasteners, and erection.

SD-13 Certificates

Panel; FIO. Installation; FIO. Accessories; FIO.

Certificates attesting that the panels and accessories conform to the requirements specified. Certified laboratory test reports showing that the sheets to be furnished are produced under a continuing quality control program and that a representative sample consisting of not less than 5 pieces has been tested and has met the quality standards specified for factory color finish.

SD-14 Samples

Panel; GA1.

Two pieces of each(exterior) panel type, finish and color to be used, minimum to illustrate color, sheen and texture.

Sealant; FIO.

One sample, approximately (1 pound), with descriptive data and color selection.

1.4 DELIVERY AND STORAGE

Fabricated components shall be delivered to the site in a dry and undamaged condition and stored out of contact with the ground. Materials shall be covered with weathertight coverings and kept dry. Protect finish and edges of components in accordance with manufacturer's instructions and recommendations.

1.5 FIELD VERIFICATION

Verify actual locations of composite building panels and other construction to which composite building panels must fit, by accurate field measurements before fabrication: show recorded measurements on final shop drawings. Coordinate fabrication schedule with construction progress to avoid delay of Work.

1.6 WARRANTIES

Provide five (5) year manufacturer's written warranty.

1.6.1 Warranty

All materials and workmanship provided are guaranteed against defects, including coverage for degradation of panel finish, color fading caused by exposure to weather, water tightness and integrity of seals after completion and final acceptance of the Work. Defects due to faulty materials or workmanship developed during the guarantee period shall be satisfactorily repaired or replaced at no expense to the Government.

1.7 [Enter Appropriate Subpart Title Here]PART 2 PRODUCTS

2.1 PANELS

Panels shall be composed of a composite material consisting of two face sheets of smooth finished aluminum bonded to either side of an extruded flat polyethylene core. Panel thickness shall be 4mm.

2.1.1 Aluminum Sheet Stock

ASTM B 209, 30003 Aluminum Alloy; 0.020 inches thick.

2.1.2 Core

Low density, extruded polyethylene, formulated for fire resistance.

2.2 FACTORY COLOR FINISH

Panels shall have a factory applied manufacturer's standard 2-coat, thermocured system composed of specially formulated inhibitive primer and custom colored fluoropolymer color topcoat containing not less than 70 percent polyvinylidene floride resin by weight with a total minimum dry film thickness of 0.023 mm (0.9 mil) and 30 percent reflective gloss when tested according to ASTM D 523. Finish to be on the exposed side. Color shall be as specified in Section 09915 COLOR SCHEDULE. The exterior color finish shall meet the test requirements specified below.

2.2.1 Not Used

2.2.2 Formability Test

When subjected to testing in accordance with ASTM D 522 Method B, (1/8 inch) diameter mandrel, the coating film shall show no evidence of fracturing to the naked eye.

2.2.3 Accelerated Weathering, Chalking Resistance and Color Change

A sample of the sheets shall be tested in accordance with ASTM D 4587. The coating shall withstand the weathering test without cracking, peeling, blistering, loss of adhesion of the protective coating, or corrosion of the base metal. Protective coating that can be readily removed from the base metal with tape in accordance with ASTM D 3359, Test Method B, shall be considered as an area indicating loss of adhesion. Following the accelerated weathering test, the coating shall have a chalk rating not less than No. 8 in accordance with ASTM D 4214 test procedures, and the color change shall not exceed 5 CIE or Hunter Lab color difference (delta E) units in accordance with ASTM D 2244.

2.2.4 Humidity Test

When subjected to a humidity cabinet test in accordance with ASTM D 2247 for 3000 hours, a scored panel shall show no signs of blistering, cracking, creepage or corrosion.

2.2.5 Impact Resistance

Factory-painted sheet shall withstand direct and reverse impact in accordance with ASTM D 2794 (0.500 inch diameter hemispherical head indenter, equal to (1.5 times the metal thickness in mils, expressed in inch-pounds), with no loss of adhesion.

2.2.6 Abrasion Resistance Test

When subjected to the falling sand test in accordance with ASTM D 968, Method A, the coating system shall withstand a minimum of [50] [80] liters of sand before the appearance of the base metal. The term "appearance of base metal" refers to the metallic coating on steel or the aluminum base metal.

2.3 SHOP FABRICATED COMPONETS

Fabricate panel with lines, breaks and angles sharp and true, surface free from weave, warp or buckle. Fabricate panels into sections with a minimum 38mm (1-1/2 inch), 90 degree return, or as indicated on Drawings. All panel corner returns to have envelope design. Butt joint corner return edges not acceptable.

2.3.1 Corner Fabrication

Fabricate panel sections with envelope pan corners.

2.3.2 Weep Holes

Locate at underside of panels, 7mm (1/4 inch) diameter holes, 600 (24 inches) on center, with a weep hole near every vertical joint. Cover holes on inside panel face with aluminum 18 x 14 mesh screen, glued to panel.

2.3.3 Adjacent Materials

Where aluminum abuts or joins adjacent dissimilar metals, execute joint to facilitate drainage and minimize possibility of corrosion.

2.3.4 Tolerances

Allow for field adjustments, as recommended by panel manufacturer, where final dimensions cannot be established by field measurements before completion of panel manufacturing.

2.4 ACCESSORIES

Wall flashing, sills, parapet and soffit trim, scupper boxes, metal closure strips, caps, and similar metal panel accessories shall be of panel material finished to match the wall panels.

2.5 FASTENERS

Fasteners for aluminum panels shall be concealed stainless steel of manufacturer's recommended type to suit application. Fasteners for attaching wall panels to supports shall provide both tensile and shear

strength of not less than (750 pounds) per fastener. Exposed wall fasteners are not acceptable.

2.6 INSULATION

Insulation for exterior walls shall be as specified in 05400 COLD-FORMED STEEL FRAMING.

2.7 VAPOR RETARDER

Vapor barrier for exterior walls shall be as specified in 05400 COLD-FORMED STEEL FRAMING.

2.8 EXTERIOR SHEATHING

Exterior sheathing for exterior walls shall be as specified in 05400 COLD-FORMED STEEL FRAMING.

2.9 SEALANT

Sealant shall be "Dow 795 Silicone" or equal. Exposed sealant shall be colored to match the applicable building color and shall cure to a rubberlike consistency.

2.10 GASKETS AND INSULATING COMPOUNDS

Gaskets and insulating compounds shall be nonabsorptive and suitable for insulating contact points of incompatible materials. Insulating compounds shall be non running after drying.

2.11 EXPANSION JOINTS

Manufacturer's standard continuous wet seal with open cell ethafoam back up. Color to be selected by architect.

PART 3 EXECUTION

3.1 INSTALLATION

Installation shall be in accordance with the manufacturer's erection instructions and approved shop drawings. Provide closure panels indicated and where necessary to provide weathertight construction. Dissimilar materials which are not compatible when contacting each other shall be insulated from each other by means of gaskets or insulating compounds. Exposed surfaces and edges shall be kept clean and free from sealant, metal cuttings, hazardous burrs, and other foreign material. Stained, discolored, or damaged sheets shall be removed from the site.

3.1.1 Fasteners

Provide a concealed fastener and furring installation system, with no fasteners exposed. Conform to panel manufacturer's instructions for installation of concealed fasteners. Provide shims as required to meet dimensional requirements.

3.1.2 Panel Joints

Locate panel joints over supports. Provide aluminum channel caps at panel ends and edges.

3.1.3 Anchorage

Anchor panels securely in place, providing for thermal and structural movement as necessary. Panels to be installed to allow for expansion and contraction of 140 degree F. ambient temperature change, with panels remaining flat, plumb and true. Following standard construction tolerances will not be acceptable Erect the work plumb, level and true.

3.1.4 Joints and Sealant

All joints shall be sealed with sealant. Apply extruded silicone gasket seal at face of caulking joint. Maintain neat appearance. Panel sealant work is a part of this section and is to be done by the installer of the panels. Comply with procedures and materials recommended by the manufacturer and fabricator.

3.2 TOLERANCES

Maximum Offset From True Alignment Between Adjacent Members Butting or In Line: 1.5 mm (1/16 inch). Maximum Variation from Vertical and Horizontal Alignment of Erected Panels: 6 mm in 6000 mm (1/4 inch in 20 feet). Panel bow tolerances shall be within 0.8% of panel dimension in width and length.

SECTION TABLE OF CONTENTS

DIVISION 07 - THERMAL & MOISTURE PROTECTION

SECTION 07530

ELASTOMERIC ROOFING (EPDM)

09/95

PART 1 GENERAL

1.1 REFERENCES
1.2 SUBMITTALS
1.3 GENERAL REQUIREMENTS
1.3.1 Delivery and Storage
1.3.2 Fire Resistance
1.3.3 Wind Uplift Requirements
1.3.4 Warranty

PART 2 PRODUCTS

2.1 ADHESIVES
2.2 FASTENERS
2.3 FLASHING
2.4 MEMBRANE
2.5 PREFABRICATED ACCESSORIES
2.6 PAVERS
2.7 WALKWAYS

PART 3 EXECUTION

3.1 ENVIRONMENTAL CONDITIONS
3.2 PREPARATION
3.3 INSTALLATION
3.3.1 Flashing
3.3.2 Expansion Joints
3.3.3 Membrane Installation
3.3.4 Cutoffs
3.3.5 Installation of Pavers
3.3.6 Installation of Walkways
3.4 PROTECTION OF FINISHED ROOFING
3.5 INSPECTION

-- End of Section Table of Contents --

SECTION 07530

ELASTOMERIC ROOFING (EPDM)
09/95

PART 1 GENERAL

1.1 REFERENCES

The publications listed below form a part of this specification to the extent referenced. The publications are referred to in the text by basic designation only.

AMERICAN SOCIETY FOR TESTING AND MATERIALS (ASTM)

ASTM D 4637	(1996) EPDM Sheet Used in Single-Ply Roof Membrane
ASTM E 108	(1996) Fire Tests of Roof Coverings

FACTORY MUTUAL ENGINEERING AND RESEARCH (FM)

FM P9513	(1996) Loss Prevention Data for Roofing Contractors

UNDERWRITERS LABORATORIES (UL)

UL 580	(1994; Rev thru February 1998) Tests for Uplift Resistance of Roof Assemblies
UL 790	(1997) Tests for Fire Resistance of Roof Covering Materials
UL 1256	(1998) Fire Test of Roof Deck Constructions

1.2 SUBMITTALS

Government approval is required for submittals with a "GA" designation; submittals having an "FIO" designation are for information only. The following shall be submitted in accordance with Section 01330 SUBMITTAL PROCEDURES:

SD-04 Drawings

Roofing System; GA.

Drawings showing size of sheets, position of sheets and splices, flashing details, fastening patterns where applicable for insulation and membrane sheets, and expansion joint details. Detail showing construction of water cutoffs to be used at membrane terminations at the end of a day's work to seal the roofing system from water intrusion.

SD-06 Instructions

Installation; FIO.

Manufacturer's instructions for preparing and installing the membrane, flashings, seams, insulation, nailers and other accessories.

SD-08 Statements

Inspection; FIO.

The inspection procedure for substrate suitability including decks, curbs and insulation installation, prior to start of the work.

Inspection procedures during and after placement of the membrane, and after completion of work by other trades.

SD-13 Certificates

Materials; FIO.

Certificates of compliance attesting that the roofing system and materials meet specification requirements. The certificates shall list the components required for the specified fire and wind uplift resistance ratings.

1.3 GENERAL REQUIREMENTS

Elastomeric membrane roofing shall be fully adhered to the roof surfaces indicated. Roofing membrane sheet widths shall be consistent with membrane attachment methods and wind uplift requirements, and shall be as large as practical to minimize joints. Membrane shall be free of defects and foreign material. Flashing work shall be coordinated to permit continuous membrane installation operations. Applied insulation shall be weatherproofed by the membrane on the same day.

1.3.1 Delivery and Storage

Materials shall be delivered to the jobsite in the manufacturer's original, unopened packages, clearly marked with the manufacturer's name, brand name, and description of contents. Materials other than ballast shall be stored in clean, dry areas. Storage temperatures shall be as specified by the manufacturer. Materials stored on the roof shall not exceed one day's supply and shall be distributed so as not to exceed the roof live load capacity.

1.3.2 Fire Resistance

The completed roof system shall have a ASTM E 108 (same test as UL 790 and FM P9513, Appendix A) Class A classification, and meet fire test requirements of UL 1256 or FM P9513, Appendix B for roof deck construction. Compliance of each component of the roofing system shall be evidenced by label or by written certification from the manufacturer.

1.3.3 Wind Uplift Requirements

Fully adhered and mechanically attached roofing systems shall have an I-90 UL 580 Class Rating <u>or</u> FM P9513, Appendix C Windstorm Classification. Ratings from other independent laboratories may be substituted provided that the tests, requirements and ratings are documented to be equivalent, to the satisfaction of the Contracting Officer.

1.3.4 Warranty

Manufacturer's standard warranty for the roofing system shall be provided for not less than 10 years from acceptance of the work. Warranty shall state that manufacturer shall repair or replace defective materials if the roofing system leaks or allows the insulation beneath the membrane to become wet during the period of the warranty.

PART 2 PRODUCTS

2.1 ADHESIVES

Adhesives, splicing cements, solvents, and sealants shall be as recommended by the membrane manufacturer.

2.2 FASTENERS

Fasteners for sheet-metal flashing shall be corrosion resistant steel annular-type nails or screws. Fasteners for anchoring the roofing membrane shall be as approved by the membrane manufacturer and identical to those used to obtain the wind uplift rating.

2.3 FLASHING

Flashing shall be of ultra-violet resistant materials as recommended by the membrane manufacturer. Prefabricated shaped flashings shall be used where possible. Sheared edges of metal flashings that contact the membrane shall be turned into a tight hem.

2.4 MEMBRANE

Membrane shall conform to ASTM D 4637, Type I EPDM, Grade 1; Class U,(0.060 inch) minimum thickness.

2.5 PREFABRICATED ACCESSORIES

Pipe seals and expansion joint covers shall be types and sizes recommended by the membrane manufacturer.

2.6 PAVERS

Pavers shall be concrete,, made from (3000 psi) air entrained concrete per Section 03300 CAST-IN-PLACE STRUCTURAL CONCRETE. Where drainage would be blocked by walkway pavers, spaces shall be provided between or below pavers to facilitate drainage. If spaces are provided between pavers, they shall be at least (1 in) wide and no more than(24 in.) apart. Space below pavers shall be provided by elevating pavers on pedestals.

2.7 WALKWAYS

Protective membrane shall be a supplemental layer of membrane material adhered to the primary roof membrane, in the width and location shown on drawings.

PART 3 EXECUTION

3.1 ENVIRONMENTAL CONDITIONS

Membrane shall not be installed in high wind, inclement weather or when there is visible ice, frost or moisture on the deck, insulation or membrane. Membrane shall not be installed when air temperature is below the minimum specified by the membrane manufacturer.

3.2 PREPARATION

The substrate of any bay or section of the building shall be complete and suitable for insulation and membrane installation before roofing is begun. Insulation over which elastomeric roofing is installed shall conform to Section 07220 ROOF INSULATION. Surfaces against which membrane is applied shall be smooth, clean, and free from dirt, water, dew, oil, grease, sharp edges and construction debris; all joints over (1/4 inch) wide shall be sealed; joints over (1/2 inch) between insulation boards shall be filled with the same insulation. Wood nailers shall comply with Section 06100 ROUGH CARPENTRY.

3.3 INSTALLATION

Installation shall comply with the manufacturer's approved instructions, except as otherwise specified.

3.3.1 Flashing

Edges of membrane, projections through the roof and changes in roof planes shall be flashed. The flashing material shall be extended and sealed a minimum of (3 inches) on each side of the fasteners which attach the membrane to nailers. The installed flashing shall be fastened at the top of the flashing a maximum of (12 inches) on center under metal counter-flashing or cap.

3.3.2 Expansion Joints

Expansion joints shall be covered using prefabricated covers or elastomeric flashing in accordance with the manufacturer's recommendations.

3.3.3 Membrane Installation

Membrane shall be applied in accordance with the manufacturer's instructions and the following requirements. Adjoining sheets comprising the membrane shall be adhered one to another using a butyl-based contact adhesive. Minimum width of the laps shall be (3 in.) A primer shall be used before applying the contact adhesive if required by the membrane manufacturer. In applying the contact adhesive, the minimum thickness of the wet film shall be in accordance with the membrane manufacturer's recommendations. If manufacturer's recommendations are not available, the minimum thickness shall be (0.025 inch.) A wet film thickness gage shall be used to determine wet film thickness. Direction of lap shall be such that water flows over lap. Membrane joints shall be free of wrinkles or fishmouths. Before application of the contact adhesive, the rubber surfaces to be mated shall be well cleaned. Joints shall be inspected over entire length after completion and defective areas shall be resealed and patched. Damaged areas of membrane shall be removed and replaced with new materials, lapping underlying membrane by at least (3 inches) on all sides.

3.3.4 Cutoffs

Cutoffs shall be installed if work day is ended or interrupted by bad weather before roof section is complete. The insulation line shall be

straightened using loose-laid cut insulation and the membrane shall be sealed to the roof deck. Flutes in metal decking shall be sealed off along the cutoff edge. Membrane shall be pulled free or cut to expose the insulation when resuming work, and cut insulation sheets used for fill-in shall be removed as necessary to maintain the staggered pattern.

3.3.5 Installation of Pavers

Concrete pavers shall be installed on a loose-laid pad of the membrane material extending at least (1 inch) beyond the walkway material, and as specified by the manufacturer.

3.3.6 Installation of Walkways

Where indicated on drawings, protective membrane (without pavers) shall be adhered to primary roof membrane. Stone ballast shall not be used at placed below or above walkways.

3.4 PROTECTION OF FINISHED ROOFING

The roofing membrane shall be protected from damage by other trades. After completion of work by other trades, the protection shall be removed and the roof shall be inspected. Any damage shall be repaired in accordance with the recommendations of the roofing manufacturer.

3.5 INSPECTION

The Contractor shall establish and maintain an inspection procedure to assure compliance of the installed elastomeric roofing with the contract requirements. The procedure shall include a checklist of points to be observed. Any work found not to be in compliance with the contract shall be promptly removed and replaced or corrected in an approved manner. Quality control shall include, but not be limited to, the following:

a. Observation of environmental conditions; number and skill level of roofing workers; start and end time of various tasks; condition of substrate.

b. Verification of compliance of materials before, during and after installation.

c. Inspection of insulation, nailers, flashings, penetrations and work requiring coordination with roofing.

d. Inspection of membrane placement, splicing, and attachment.

e. Inspection of placement of ballast and walkways.

f. A roofing technician responsible directly to the Contractor and experienced in the construction of elastomeric roofing systems shall perform the inspection functions and be on the site whenever roofing operations are in progress.

-- End of Section --

SECTION TABLE OF CONTENTS

DIVISION 07 - THERMAL & MOISTURE PROTECTION

SECTION 07600

SHEET METALWORK, GENERAL

10/94

PART 1 GENERAL

1.1 REFERENCES
1.2 GENERAL REQUIREMENTS
1.2.1 Coordination
1.3 SUBMITTALS
1.4 DELIVERY, STORAGE, AND HANDLING

PART 2 PRODUCTS

2.1 MATERIALS
2.1.1 Accessories
2.1.2 Aluminum Extrusions
2.1.3 Bituminous Cement
2.1.4 Sealant
2.1.5 Fasteners
2.1.6 Felt
2.1.7 Polyvinyl Chloride (PVC) Reglets
2.1.8 Aluminum Alloy Sheet and Plate
2.1.9 Not Used
2.1.10 Not Used
2.1.11 Solder
2.1.12 Through-Wall Flashing

PART 3 EXECUTION

3.1 GENERAL
3.2 EXPANSION JOINTS
3.3 PROTECTION OF ALUMINUM
3.3.1 Paint
3.3.2 Nonabsorptive Tape or Gasket
3.4 CONNECTIONS AND JOINTING
3.4.1 Not Used
3.4.2 Riveting
3.4.3 Seaming
3.5 CLEATS
3.6 FLASHINGS
3.6.1 Base Flashing
3.6.2 Counter Flashings
3.6.3 Not Used
3.6.4 Through-Wall Flashing
3.6.4.1 Lintel Flashing
3.6.4.2 Sill Flashing
3.7 Not Used
3.8 Not Used
3.9 Not Used

3.10 CONTRACTOR QUALITY CONTROL

-- End of Section Table of Contents --

SECTION 07600

SHEET METALWORK, GENERAL
10/94

PART 1 GENERAL

1.1 REFERENCES

The publications listed below form a part of this specification to the extent referenced. The publications are referred to in the text by basic designation only.

AMERICAN SOCIETY FOR TESTING AND MATERIALS (ASTM)

ASTM B 32	(1996) Solder Metal
ASTM B 209	(1996) Aluminum and Aluminum-Alloy Sheet and Plate
ASTM B 221	(1996) Aluminum and Aluminum-Alloy Extruded Bars, Rods, Wire, Profiles, and Tubes
ASTM D 226	(1997) Asphalt-Saturated Organic Felt Used in Roofing and Waterproofing
ASTM D 1784	(1996) Rigid Poly(Vinyl Chloride) (PVC) Compounds and Chlorinated Poly(Vinyl Chloride) (CPVC) Compounds
ASTM D 2822	(1991; R 1997) Asphalt Roof Cement
ASTM D 4586	(1993) Asphalt Roof Cement, Asbestos Free

SHEET METAL AND AIR CONDITIONING CONTRACTORS NATIONAL ASSOCIATION (SMACNA)

SMACNA-02	(1993; Errata) Architectural Sheet Metal Manual

1.2 GENERAL REQUIREMENTS

Sheet metalwork shall be accomplished to form weathertight construction without waves, warps, buckles, fastening stresses or distortion, and shall allow for expansion and contraction.

1.2.1 Coordination

Cutting, fitting, drilling, and other operations in connection with sheet metal required to accommodate the work of other trades shall be performed by sheet metal mechanics. Installation of sheet metal items used in conjunction with roofing shall be coordinated with roofing work to permit continuous roofing operations. Sheet metalwork pertaining to heating, ventilating, and air conditioning is specified in Division 15.

1.3 SUBMITTALS

Government approval is required for submittals with a "GA" designation; submittals having an "FIO" designation are for information only. The following shall be submitted in accordance with Section 01330 SUBMITTAL PROCEDURES:

SD-04 Drawings

Materials; GA.

Drawings of sheet metal items showing weights, gauges or thicknesses; types of materials; expansion-joint spacing; fabrication details; and installation procedures.

1.4 DELIVERY, STORAGE, AND HANDLING

Materials shall be adequately packaged and protected during shipment and shall be inspected for damage, dampness, and wet-storage stains upon delivery to the jobsite. Materials shall be clearly labeled as to type and manufacturer. Sheet metal items shall be carefully handled to avoid damage. Materials shall be stored in dry, ventilated areas until immediately before installation.

PART 2 PRODUCTS

2.1 MATERIALS

Lead, lead-coated metal, and galvanized steel shall not be used. Any metal listed by SMACNA-02 for a particular item may be used, unless otherwise specified or indicated. Materials shall conform to the requirements specified below and to the thicknesses and configurations established in SMACNA-02. Different items need not be of the same metal, except that if copper is selected for any exposed item, all exposed items shall be copper.

2.1.1 Accessories

Accessories and other items essential to complete the sheet metal installation, though not specifically indicated or specified, shall be provided.

2.1.2 Aluminum Extrusions

ASTM B 221, Alloy 6063, Temper T5.

2.1.3 Bituminous Cement

Type I asphalt cement conforming to ASTM D 2822 or ASTM D 4586.

2.1.4 Sealant

Unless otherwise specified, sealant shall be an elastomeric weather resistant sealant as specified in Section 07900 JOINT SEALING.

2.1.5 Fasteners

Fasteners shall be compatible with the fastened material and shall be the type best suited for the application.

2.1.6 Felt

ASTM D 226, Type I.

2.1.7 Polyvinyl Chloride (PVC) Reglets

ASTM D 1784, Class 14333D, (0.075 inch) minimum thickness.

2.1.8 Aluminum Alloy Sheet and Plate

ASTM B 209, minimum .8 mm (.032 inch) thick, clear anodized, form, alloy, and temper appropriate for use. Aluminum parapet coping to match roofing sheet metal in color and finish.

2.1.9 Not Used

2.1.10 Not Used

2.1.11 Solder

ASTM B 32, 95-5 tin-antimony.

2.1.12 Through-Wall Flashing

a. Not Used

b. Not Used

c. Composite membrane through-wall flashing not less than (40 mils) thick overall, with a (32 mils) thick self-healing sheet material composed of rubberized asphalt integrally bonded to (8 mils) of cross laminated high density polyethylene film each side. For use at all through wall flashing at base of masonry walls, steel lintels, window heads, and similar locations in wall system and as noted on Drawings.

PART 3 EXECUTION

3.1 GENERAL

Items such as coping and flashing shall be fabricated in conformance with SMACNA-02 and as indicated. Unless otherwise specified or indicated, exposed edges shall be folded back to form a 1/2 inch hem on the concealed side, and bottom edges of exposed vertical surfaces shall be angled to form drips. Bituminous cement shall not be placed in contact with roofing membranes.

3.2 EXPANSION JOINTS

Expansion joints shall be provided as specified in SMACNA-02. Expansion joints in continuous sheet metal shall be provided at (32 foot) intervals for aluminum, except extruded aluminum gravel stops and fasciae which shall have expansion joints at not more than (12 foot) spacing. Joints shall be evenly spaced. An additional joint shall be provided where the distance between the last expansion joint and the end of the continuous run is more than half the required interval spacing.

3.3 PROTECTION OF ALUMINUM

Aluminum shall not be used where it will be in contact with copper or where it will contact water which flows over copper surfaces. Aluminum that will be in contact with wet or pressure-treated wood, mortar, concrete, masonry, or ferrous metals shall be protected against galvanic or corrosive action by one of the following methods:

3.3.1 Paint

Aluminum surfaces not exposed to view shall be solvent cleaned and given one coat of zinc-molybdate primer and one coat of aluminum paint as specified in Section 09900 PAINTING, GENERAL.

3.3.2 Nonabsorptive Tape or Gasket

Nonabsorptive tape or gasket shall be placed between the adjoining surfaces and cemented to the aluminum surface using a cement compatible with aluminum.

3.4 CONNECTIONS AND JOINTING

3.4.1 Not Used

3.4.2 Riveting

Joints in aluminum sheets (0.040 inch) or less in thickness shall be mechanically made.

3.4.3 Seaming

Flat-lock and soldered-lap seams shall finish not less than (1 inch) wide. Unsoldered plain-lap seams shall lap not less than (3 inches) unless otherwise specified. Flat seams shall be made in the direction of the flow.

3.5 CLEATS

A continuous cleat shall be provided where indicated or specified to secure loose edges of the sheet metalwork. Butt joints of cleats shall be spaced approximately (1/8 inch) apart. The cleat shall be fastened to supporting wood construction with nails evenly spaced not over (12 inches) on centers. Where the fastening is to be made to concrete or masonry, screws shall be used and shall be driven in expansion shields set in concrete or masonry.

3.6 FLASHINGS

Flashings shall be installed at locations indicated on Drawings and as specified below. Sealing shall be according to the flashing manufacturer's recommendations. Flashings shall be installed at intersections of roof with vertical surfaces and at projections through roof, except that flashing for heating and plumbing, including piping, roof, and floor drains, and for electrical conduit projections through roof or walls are specified in other sections. Except as otherwise indicated, counter flashings shall be provided over base flashings. Perforations in flashings made by masonry anchors shall be covered up by an application of bituminous plastic cement at the perforation. Flashing shall be installed on top of joint reinforcement. Flashing shall be formed to direct water to the outside of the system.

3.6.1 Base Flashing

Metal base flashing shall be coordinated with roofing work. Metal base flashing shall be set in plastic bituminous cement over the roofing membrane, nailed to nailing strip, and secured in place on the roof side with nails spaced not more than (3 inches) on centers. Metal base flashing shall not be used on built-up roofing.

3.6.2 Counter Flashings

Except as otherwise indicated, counter flashings shall be provided over base flashings. Counter flashing shall be installed as shown on the drawings . Where bituminous base flashings are provided, the counter flashing shall extend down as close as practicable to the top of the cant strip. Counter flashing shall be factory formed to provide spring action against the base flashing.

3.6.3 Not Used

3.6.4 Through-Wall Flashing

Through-wall flashing includes sill, lintel, shelf angle, parapet cap, base of wall flashing and as shown on drawings. In masonry walls, flashing shall be laid with a layer of mortar below the flashing so that the total thickness of the mortar and flashing are the same thickness as the regular mortar joints. Turn through-wall flashings up a minimum of in wall cavity and bed into mortar joints of masonry or seal to concrete or sheathing over steel stud framed back-up. Joints in flashing shall be lapped and sealed. Flashing shall be one piece for lintels and sills.

3.6.4.1 Lintel Flashing

Lintel flashing shall extend the full length of lintel. Flashing shall extend horizontally through the wall above the lintels, to beyond the exterior face of wall, or shall be applied over top of masonry and precast concrete lintels. End dams shall be provided in flashing at ends of lintels. Bedjoints of lintels at control joints shall be underlaid with sheet metal bond breaker.

3.6.4.2 Sill Flashing

Sill flashing shall extend the full width of the sill and not less than (4 inches) beyond ends of sill except at control joint where the flashing shall be terminated at the end of the sill.

3.7 Not Used

3.8 Not Used

3.9 Not Used

3.10 CONTRACTOR QUALITY CONTROL

The Contractor shall establish and maintain a quality control procedure for sheet metal used in conjunction with roofing to assure compliance of the installed sheet metalwork with the contract requirements. Any work found not to be in compliance with the contract shall be promptly removed and replaced or corrected in an approved manner. Quality control shall include, but not be limited to, the following:

a. Observation of environmental conditions; number and skill level of

sheet metal workers; condition of substrate.

b. Verification of compliance of materials before, during, and after installation.

c. Inspection of sheet metalwork for proper size and thickness, fastening and joining, and proper installation.

The actual quality control observations and inspections shall be documented and a copy of the documentation furnished to the Contracting Officer at the end of each day. A roofing technician responsible directly to the Contractor and experienced in the construction of similar roofing systems and related work shall perform the quality control functions and be on the site when roofing operations are in progress.

-- End of Section --

SECTION TABLE OF CONTENTS

DIVISION 07 - THERMAL & MOISTURE PROTECTION

SECTION 07720

ROOF ACCESSORIES

07/99y

PART 1 GENERAL

1.1 SUBMITTALS

PART 2 PRODUCTS

2.1 ROOF HATCH
2.1.1 Curbs
2.1.2 Hatch Cover
2.1.3 Hardware
2.1.4 Hinges
2.2 Automatic Smoke Vent
2.2.1 Curb
2.2.2 Hatch Cover
2.2.3 Operation
2.2.4 Hardware
2.3 FABRICATION

PART 3 EXECUTION

3.1 INSTALLATION

-- End of Section Table of Contents --

SECTION 07720

ROOF ACCESSORIES
07/99y

PART 1 GENERAL

1.1 SUBMITTALS

Government approval is required for submittals with a "GA" designation; submittals having an "FIO" designation are for information only. The following shall be submitted in accordance with Section 01330 SUBMITTAL PROCEDURES:

SD-01 Data

Roof Hatch; FIO Smoke Vent; FIO.

Manufacturer's catalog data.

SD-04 Drawings

Roof Hatch; FIO; Smoke Vent; FIO

Drawings showing details of fabrication, installation and anchoring.

PART 2 PRODUCTS

2.1 ROOF HATCH

Roof hatch is to be prefabricated, single leaf type, 914 x 2438 mm (3'-0" x 8'-0")in nominal dimension.

2.1.1 Curbs

Curbs shall be 300 mm (12 inches) in height and of minimum 14 gauge galvanized and prime painted steel. It shall be formed with a 89 mm (3-1/2 inch) flange with holes provided for securing to the roof deck. Curb shall be equipped with an integral metal cap flashing of the same gauge and material as the curb, fully welded at the corners for weathertightness, to receive roof flashing system. Insulation on the exterior of the curb shall be 25mm (1 inch) rigid insulation.

2.1.2 Hatch Cover

Hatch cover shall be 14 gauge galvanized and prime painted steel with 75 mm (3 inch" beaded flange and formed reinforcing members welded to support a minimum live load of 40 lb per square foot. Insulation shall be minimum 25 mm (one inch) glass fiber insulation fully covered and retained by a 22 gauge, galvanized and prime painted, steel inner liner. A continuous neoprene gasket shall provide weatherproof seal at perimeter.

2.1.3 Hardware

Hardware shall be manufacturer's standard zinc plated and chromate sealed,

manually operated type, with compression spring operators, positive snap latch with turn handles inside and out and padlock hasp inside; automatic hold-open arm with vinyl covered grip handle for easy release; cadmium plated finish.

2.1.4 Hinges

Hinges shall be manufacturer's recommended type.

2.2 Automatic Smoke Vent

Smoke vent is to be a prefabricated aluminum, single leaf type, 914 x 610 mm (3'-0" x 2'-0")in nominal dimension (width x length) equipped to open and close electrically.

2.2.1 Curb

Curbs shall be double walled and 300 mm (12 inches) in height and of minimum 11 gauge aluminum. It shall be formed with a 76 mm (3 inch) flange with holes provided for securing to the roof deck. Curb shall be equipped with an integral metal cap flashing of the same gauge and material as the curb, fully welded at the corners for weathertightness, to receive roof flashing system. Insulation on the exterior of the curb shall have a minimum of 25mm (1 inch) rigid insulation.

2.2.2 Hatch Cover

Hatch cover shall be 11 gauge, mill finish aluminum. Insulation shall be minimum 25 mm (one inch) glass fiber insulation fully covered and retained by a 11 gauge, aluminum inner liner. A continuous neoprene gasket shall provide weatherproof seal at perimeter.

2.2.3 Operation

Hatch shall have positive hold release mechanism designed to hold the cover closed against 30 lbs/sq. ft. uplift force. Release shall be by a "McCabe" U.L. listed, 12V electronic/thermal resettable link connected to a key switch located in the elevator lobby. Hatch must be able to open and close hatch upon activation of the key switch.

2.2.4 Hardware

Springs shall be heavy duty steel torsion springs designed to open vent covers automatically against 10 lbs./sq.ft. wind or snow load when released. Hardware is to include manufacturers standard heavy duty aluminum hinges with non-removable pins, and heavy duty shock absorbers.

2.3 FABRICATION

Fabricate hatches free of visual distortions and defects. Weld corners and joints. Provide means for removal of condensation and provide weathertight assembly.

PART 3 EXECUTION

3.1 INSTALLATION

Install roof hatches in accordance with manufacturer's instructions. Coordinate with installation of roofing system and related flashings.

Provide weathertight installation. Provide bituminous paint on metal surfaces of units in contact with cementitious materials and dissimilar metals.

-- End of Section --

SECTION TABLE OF CONTENTS

DIVISION 07 - THERMAL & MOISTURE PROTECTION

SECTION 07810

SPRAY-APPLIED FIREPROOFING

05/98

PART 1 GENERAL

1.1 REFERENCES
1.2 SUBMITTALS
1.3 DELIVERY AND STORAGE
1.4 ENVIRONMENTAL CONDITIONS
1.4.1 Temperature
1.4.2 Ventilation
1.5 INSTALLER QUALIFICATIONS
1.6 MANUFACTURER'S SERVICES
1.7 FIRE RESISTANCE RATING
1.8 EXTENT OF FIREPROOFING

PART 2 PRODUCTS

2.1 SPRAY-APPLIED FIREPROOFING
2.1.1 Dry Density and Cohesion/Adhesion
2.1.1.1 Concealed Structural Components
2.1.1.2 Exposed Structural Components
2.1.2 Deflection
2.1.3 Bond-Impact
2.1.4 Compressive Strength
2.1.5 Corrosion
2.2 SEALER
2.3 WATER

PART 3 EXECUTION

3.1 SURFACE PREPARATION
3.2 PROTECTION
3.3 MIXING
3.4 APPLICATION
3.4.1 Sequence
3.4.2 Application Technique
3.5 FIELD TESTS
3.5.1 Thickness, Density, Cohesion/Adhesion
3.5.2 Repair

-- End of Section Table of Contents --

SECTION 07810

SPRAY-APPLIED FIREPROOFING
05/98

PART 1 GENERAL

1.1 REFERENCES

The publications listed below form a part of this specification to the extent referenced. The publications are referred to in the text by basic designation only.

AMERICAN SOCIETY FOR TESTING AND MATERIALS (ASTM)

ASTM E 119	(1997) Fire Tests of Building Construction and Materials
ASTM E 605	(1993; R 1996) Thickness and Density of Sprayed Fire-Resistive Material (SFRM) Applied to Structural Members
ASTM E 736	(1992) Cohesion/Adhesion of Sprayed Fire-Resistive Materials Applied to Structural Members
ASTM E 759	(1992; R 1996) Effect of Deflection on Sprayed Fire-Resistive Material Applied to Structural Members
ASTM E 760	(1992; R 1996) Effect of Impact on Bonding of Sprayed Fire-Resistive Material Applied to Structural Members
ASTM E 761	(1992) Compressive Strength of Sprayed Fire-Resistive Material Applied to Structural Members
ASTM E 937	(1993) Corrosion of Steel by Sprayed Fire-Resistive Material (SFRM) Applied to Structural Members
ASTM E 1042	(1992; R 1997) Acoustically Absorptive Materials Applied by Trowel or Spray
ASTM G 21	(1990) Determining Resistance of Synthetic Polymeric Materials to Fungi

UNDERWRITERS LABORATORIES (UL)

UL 263	(1997; Rev Jun 1998) Fire Tests of Building Construction and Materials
UL Fire Resist Dir	(1997) Fire Resistance Directory (2 Vol.)

1.2 SUBMITTALS

Government approval is required for submittals with a "GA" designation; submittals having an "FIO" designation are for information only. The following shall be submitted in accordance with Section 01330 SUBMITTAL PROCEDURES:

SD-01 Data

Fireproofing Material; GA.

Data identifying performance characteristics of fireproofing material. Data shall include recommended application requirements and indicate thickness of fireproofing that must be applied to achieve each required fire rating.

SD-09 Reports

UL Test Assembly; FIO.

Reports and test records, attesting that the fireproofing material conforms to the specified requirements. Each test report shall conform to the report requirements specified by the test method.

SD-13 Certificates

Installer Qualifications; FIO.

Manufacturer's certification that each listed installer is qualified and trained to install the specified fireproofing. Evidence that each fireproofing installer has had a minimum of 3 years experience in installing the specified type of fireproofing.

Manufacturer's Inspection; FIO.

Manufacturer's certification that the spray-applied fireproofing in the entire project complies with the manufacturer's criteria and recommendations.

SD-14 Samples

Spray-Applied Fireproofing; GA.

One sample panel, (18 inches) square, for each specified type of fireproofing. Also, a designated sample area of not less than (100 square feet) shall be prepared. Sample area shall be representative of typical installation of fireproofing including metal decks, joists, beams, columns and attachments. Equipment, materials and procedures used in the sample area shall be the same as, or representative of, that to be used in the work. The sample area shall be approved prior to proceeding with fireproofing work in any other area. The approved sample area shall be used as a reference standard for applied fireproofing material. Sample area shall remain in place and open to observation until all spray-applied fireproofing is completed and accepted, at which time it may become part of the work.

1.3 DELIVERY AND STORAGE

Packaged material shall be delivered in the original unopened containers, marked to show the names of the brand and the manufacturer. Fireproofing material shall be kept dry until ready to be used, and shall be stored off the ground, under cover and away from damp surfaces. Damaged or opened containers will be rejected. Material with shelf-life shall be applied prior to expiration of the shelf-life.

1.4 ENVIRONMENTAL CONDITIONS

1.4.1 Temperature

Substrate and ambient air temperatures shall be maintained above (40 degrees F) during application and for 24 hours before and after application. Relative humidity shall be maintained within the limits recommended by the fireproofing manufacturer.

1.4.2 Ventilation

Adequate ventilation shall be provided to properly dry the fireproofing after application. In enclosed areas, a minimum of 4 air exchanges per hour shall be provided by forced air circulation.

1.5 INSTALLER QUALIFICATIONS

Each installer of fireproofing material shall be trained and have a minimum of 3 years experience in the installation of fireproofing of the type specified.

1.6 MANUFACTURER'S SERVICES

The manufacturer or its representative shall be onsite prior to, periodically during, and at completion of the application, to provide the specified inspections and certifications; and to ensure that preparations are adequate and that the material is applied according to manufacturer's recommendations and the contract requirements.

1.7 FIRE RESISTANCE RATING

Fire resistance ratings shall be in accordance with the fire rated assemblies listed in UL Fire Resist Dir. Proposed materials not listed in UL Fire Resist Dir shall have fire resistance ratings at least equal to the UL Fire Resist Dir ratings as determined by an approved independent testing laboratory, based on tests specified in UL 263 or ASTM E 119.

1.8 EXTENT OF FIREPROOFING

Fireproofing shall not be applied to steel bearing members in elevator hoistways. All other load-bearing structural steel members which support walls or floors, including columns, beams, roof joists, and the underside of steel roof decks, shall be protected with spray-applied fireproofing to a fire resistance hour-rating of one hour unless otherwise indicated on drawings. Lintels and steel members that only supporting stair structures do not require fireproofing.

PART 2 PRODUCTS

2.1 SPRAY-APPLIED FIREPROOFING

Spray-applied fireproofing material, including sealer, shall conform to

ASTM E 1042, Class (a), Category A, either Type I or Type II, except that the dust removed shall not exceed (0.0025 gram per square foot) of fireproofing material applied as specified in the project. Material shall be asbestos free, and shall resist fungus for a period of 28 days when tested in accordance with ASTM G 21.

2.1.1 Dry Density and Cohesion/Adhesion

Fireproofing shall have a minimum ASTM E 605 dry density and ASTM E 736 cohesion/adhesion properties as follows:

2.1.1.1 Concealed Structural Components

Fireproofing for structural components concealed above the ceiling, or within a wall, chase, or furred space, shall have a minimum average applied dry density of (15 pounds per cubic foot) and a cohesion/adhesion strength of .

2.1.1.2 Exposed Structural Components

Fireproofing for exposed structural components, except where otherwise specified or indicated, shall have a minimum applied dry density of (22 pounds per cubic foot) and a cohesion/adhesion strength of (300 pounds per square foot).

2.1.2 Deflection

Spray-applied fireproofing shall not crack, spall, or delaminate when tested in accordance with ASTM E 759.

2.1.3 Bond-Impact

Spray-applied fireproofing material shall not crack, spall or delaminate when tested in accordance with ASTM E 760.

2.1.4 Compressive Strength

The minimum compressive strength shall be (1000 psf) when tested in accordance with ASTM E 761.

2.1.5 Corrosion

Spray-applied fireproofing material shall not contribute to corrosion of test panels when tested as specified in ASTM E 937.

2.2 SEALER

Sealer shall be the type approved by the manufacturer of the fireproofing material and shall be contrast with fireproofing.

2.3 WATER

Water used for material mixing and surface preparation shall be potable.

PART 3 EXECUTION

3.1 SURFACE PREPARATION

Surfaces to be fireproofed shall be thoroughly cleaned of dirt, grease,

oil, paint, loose rust, rolling lubricant, mill scale or other contaminants that will interfere with the proper bonding of the sprayed fireproofing to the substrate. Overhead areas to be fireproofed shall be cleared of all obstructions interfering with the uniform application of the spray-applied fireproofing. Hardware such as support sleeves, inserts, clips, hanger attachment devices and the like shall be installed prior to the application of the fireproofing. Condition of the surfaces shall be acceptable to the manufacturer prior to application of spray-applied fireproofing. Applications listed for use on primed surfaces shall be coordinated with the manufacturer and detailed in submittal item SD-01 Data.

3.2 PROTECTION

Surfaces not to receive spray-applied fireproofing shall be covered to prevent contamination by splatter, rebound and overspray. Exterior openings in areas to receive spray-applied fireproofing shall be covered prior to and during application of fireproofing with tarpaulins or other approved material. Surfaces not to receive fireproofing shall be cleaned of fireproofing and sealer.

3.3 MIXING

Fireproofing material shall be mixed in accordance with the manufacturer's recommendations.

3.4 APPLICATION

3.4.1 Sequence

Prior to application of fireproofing on each floor, the manufacturer shall inspect and approve application equipment, water supply and pressure, and the application procedures. Fireproofing shall be applied to underside of steel roof deck or steel floor assemblies only after respective roof or floor construction is complete. Fireproofing material shall be applied prior to the installation of ductwork, piping and conduits which would interfere with uniform application of the fireproofing. The Contractor shall not allow roof traffic during application and curing period.

3.4.2 Application Technique

Water pressure and volume shall be maintained to manufacturer's recommendations throughout the fireproofing application. Fireproofing material shall be applied to the thickness established for the specified fire resistance rating, in accordance with the procedure recommended by the manufacturer, and to a uniform density and texture. Fireproofing material shall not be tamped to achieve the desired density. Sealer shall be applied to all fireproofing.

3.5 FIELD TESTS

The applied fireproofing shall be tested by an approved independent testing laboratory, in approved locations, for density, cohesion/adhesion force as specified, and for thickness in accordance with ASTM E 605. Any area showing less than minimum requirements shall be corrected. Proposed corrective measures, in writing, shall be approved before starting the corrective action. Corrected work shall be retested.

3.5.1 Thickness, Density, Cohesion/Adhesion

Each structural component type shall be tested at floor and roof decks, beams, columns, joists, and trusses. Minimum average thickness shall be as [indicated] [or] required by UL Fire Resist Dir. Density and cohesion/adhesion shall be as specified.

3.5.2 Repair

Additional fireproofing material may be added to provide proper thickness. Rejected areas of fireproofing shall be corrected to meet specified requirements by adding fireproofing material to provide the proper thickness, or by removing defects and respraying with new fireproofing material. Repairs shall use same type of fireproofing material as originally applied. Repaired areas shall be retested and reinspected. Fireproofing material shall be applied to voids or damaged areas by hand-trowel, or by respraying.

-- End of Section --

SECTION TABLE OF CONTENTS

DIVISION 07 - THERMAL & MOISTURE PROTECTION

SECTION 07840

FIRESTOPPING

05/98

PART 1 GENERAL

1.1 REFERENCES
1.2 SUBMITTALS
1.3 GENERAL REQUIREMENTS
1.4 STORAGE AND DELIVERY
1.5 INSTALLER QUALIFICATIONS

PART 2 PRODUCTS

2.1 FIRESTOPPING MATERIALS
2.1.1 Fire Hazard Classification
2.1.2 Toxicity
2.1.3 Fire Resistance Rating
2.1.3.1 Through-Penetrations
2.1.3.2 Construction Joints and Gaps

PART 3 EXECUTION

3.1 PREPARATION
3.2 INSTALLATION
3.3 INSPECTION

-- End of Section Table of Contents --

SECTION 07840

FIRESTOPPING
05/98

PART 1 GENERAL

1.1 REFERENCES

The publications listed below form a part of this specification to the extent referenced. The publications are referred to in the text by basic designation only.

AMERICAN SOCIETY FOR TESTING AND MATERIALS (ASTM)

ASTM E 84	(1996a) Surface Burning Characteristics of Building Materials
ASTM E 119	(1995a) Fire Tests of Building Construction and Materials
ASTM E 814	(1994b) Fire Tests of Through-Penetration Fire Stops

UNDERWRITERS LABORATORIES (UL)

UL 723	(1996) Test for Surface Burning Characteristics of Building Materials
UL 1479	(1994; Rev thru Jul 1997) Fire Tests of Through-Penetration Firestops
UL 2079	(1997) Tests for Fire Resistance of Building Joint Systems
UL Fire Resist Dir	(1997) Fire Resistance Directory

1.2 SUBMITTALS

Government approval is required for submittals with a "GA" designation; submittals having an "FIO" designation are for information only. The following shall be submitted in accordance with Section 01330 SUBMITTAL PROCEDURES:

SD-04 Drawings

Firestopping Materials; GA.

Detail drawings including manufacturer's descriptive data, typical details, installation instructions and the fire-test data and/or report as appropriate for the fire resistance rated construction and location. Submittal shall indicate the firestopping material to be provided for each type of application. When more than 5 penetrations or construction joints are to receive firestopping, drawings shall indicate location and type of

application.

SD-13 Certificates

Firestopping Materials; FIO.

Certificates attesting that firestopping material complies with the specified requirements. The label or listing of the Underwriters Laboratories will be acceptable evidence. In lieu of the label or listing, a written certificate may be submitted from an approved, nationally recognized testing agency equipped to perform such services, stating that the items have been tested and conform to the specified requirements and testing methods.

1.3 GENERAL REQUIREMENTS

Firestopping shall consist of furnishing and installing a material or a combination of materials to form an effective barrier against the spread of flame, smoke and gases, and maintain the integrity of fire resistance rated walls, partitions, floors, and ceiling-floor assemblies, including through-penetrations and construction joints. Through-penetrations include the annular space around pipes, tubes, conduit, wires, cables and vents. Construction joints include those used to accommodate expansion, contraction, wind, or seismic movement; firestopping material shall not interfere with the required movement of the joint. Gaps requiring firestopping include gaps between curtain wall and the floor slab and between the top of fire-rated walls and the roof deck.

1.4 STORAGE AND DELIVERY

Materials shall be delivered in the original unopened packages or containers showing name of the manufacturer and the brand name. Materials shall be stored off the ground and shall be protected from damage and exposure to elements. Damaged or deteriorated materials shall be removed from the site.

1.5 INSTALLER QUALIFICATIONS

Installer of firestopping material shall be trained by the manufacturer or the manufacturer's representative, and shall have a minimum of 3 years experience in the installation of firestopping of the type specified.

PART 2 PRODUCTS

2.1 FIRESTOPPING MATERIALS

Firestopping materials shall consist of commercially manufactured products complying with the following minimum requirements:

2.1.1 Fire Hazard Classification

Material shall have a flame spread of 25 or less, and a smoke developed rating of 50 or less, when tested in accordance with ASTM E 84 or UL 723. Material shall be an approved firestopping material as listed in UL Fire Resist Dir or by a nationally recognized testing laboratory.

2.1.2 Toxicity

Material shall be nontoxic to humans at all stages of application.

2.1.3 Fire Resistance Rating

Firestopping will not be required to have a greater fire resistance rating than that of the assembly in which it is being placed.

2.1.3.1 Through-Penetrations

Firestopping materials for through-penetrations, as described in paragraph GENERAL REQUIREMENTS, shall provide "F" and "T" fire resistance ratings in accordance with ASTM E 814 or UL 1479, except that T Ratings are not required for penetrations smaller than or equal to a (4 inch) nominal pipe or (16 square inches) in overall cross sectional area. Fire resistance ratings shall be the following:

a. Penetrations of Fire Resistance Rated Walls and Partitions: F Rating = one hour, T Rating = one hour.

b. Penetrations of Fire Resistance Rated Floors and Ceiling-Floor Assemblies: F Rating = one hour, T Rating = one hour.

2.1.3.2 Construction Joints and Gaps

Fire resistance ratings of construction joints, as described in paragraph GENERAL REQUIREMENTS, and gaps such as those between floor slabs or roof decks and curtain walls shall be the same as the construction in which they occur. Construction joints and gaps shall be provided with firestopping materials and systems that have been tested per ASTM E 119 or UL 2079 to meet the required fire resistance rating.

PART 3 EXECUTION

3.1 PREPARATION

Areas to receive firestopping shall be free of dirt, grease, oil, or loose materials which may affect the fitting or fire resistance of the firestopping system.

3.2 INSTALLATION

Firestopping material shall completely fill void spaces regardless of geometric configuration, subject to tolerance established by the manufacturer. Firestopping for filling floor voids (4 inches) or more in any direction shall be capable of supporting the same load as the floor is designed to support or shall be protected by a permanent barrier to prevent loading or traffic in the firestopped area. Firestopping shall be installed in accordance with manufacturer's written instructions. Firestopping shall be provided in the following locations, except in floor slabs on grade:

a. Penetrations of duct, conduit, tubing, cable and pipe through floors and through fire-resistance rated walls, partitions, and ceiling-floor assemblies.

b. Penetrations of vertical shafts such as pipe chases, elevator shafts, and utility chutes.

c. Gaps at the intersection of floor slabs and curtain walls, including inside of hollow curtain walls at the floor slab.

d. Gaps at perimeter of fire-resistance rated walls and partitions, such as between the top of the walls and the bottom of roof decks.

e. Construction joints in floors and fire rated walls and partitions.

f. Other locations where required to maintain fire resistance rating of the construction.

3.3 INSPECTION

Firestopped areas shall not be covered or enclosed until inspection is complete and approved. A manufacturer's representative shall inspect the applications initially to ensure adequate preparations (clean surfaces suitable for application, etc.) and periodically during the work to assure that the completed work has been accomplished according to the manufacturer's written instructions and the specified requirements.

-- End of Section --

SECTION TABLE OF CONTENTS

DIVISION 07 - THERMAL & MOISTURE PROTECTION

SECTION 07900

JOINT SEALING

06/97

PART 1 GENERAL

1.1 REFERENCES
1.2 SUBMITTALS
1.3 ENVIRONMENTAL REQUIREMENTS
1.4 DELIVERY AND STORAGE

PART 2 PRODUCTS

2.1 BACKING
2.1.1 Rubber
2.1.2 Not Used
2.1.3 Synthetic Rubber
2.1.4 Neoprene
2.2 BOND-BREAKER
2.3 PRIMER
2.4 Not Used
2.5 SEALANT
2.5.1 LATEX
2.5.2 ELASTOMERIC
2.5.3 ACOUSTICAL
2.6 SOLVENTS AND CLEANING AGENTS

PART 3 EXECUTION

3.1 GENERAL
3.1.1 Surface Preparation
3.1.2 Concrete and Masonry Surfaces
3.1.3 Steel Surfaces
3.1.4 Aluminum Surfaces
3.1.5 Wood Surfaces
3.2 APPLICATION
3.2.1 Masking Tape
3.2.2 Backing
3.2.3 Bond-Breaker
3.2.4 Primer
3.2.5 Sealant
3.3 CLEANING

-- End of Section Table of Contents --

SECTION 07900

JOINT SEALING
06/97

PART 1 GENERAL

1.1 REFERENCES

The publications listed below form a part of this specification to the extent referenced. The publications are referred to in the text by basic designation only.

AMERICAN SOCIETY FOR TESTING AND MATERIALS (ASTM)

ASTM C 509	(1994) Elastomeric Cellular Preformed Gasket and Sealing Material
ASTM C 734	(1993) Low-Temperature Flexibility of Latex Sealants After Artificial Weathering
ASTM C 834	(1995) Latex Sealants
ASTM C 920	(1995) Elastomeric Joint Sealants
ASTM D 217	(1994) Cone Penetration of Lubricating Grease (IP50/88)
ASTM D 1056	(1991) Flexible Cellular Materials - Sponge or Expanded Rubber
ASTM E 84	(1996a) Surface Burning Characteristics of Building Materials

1.2 SUBMITTALS

Government approval is required for submittals with a "GA" designation; submittals having an "FIO" designation are for information only. The following shall be submitted in accordance with Section 01330 SUBMITTAL PROCEDURES:

SD-01 Data

Sealant; FIO.

Manufacturer's descriptive data including storage requirements, shelf life, curing time, instructions for mixing and application, and primer data (if required). A copy of the Material Safety Data Sheet shall be provided for each solvent, primer or sealant material.

SD-13 Certificates

Sealant; FIO.

Certificates of compliance stating that the materials conform to the specified requirements.

1.3 ENVIRONMENTAL REQUIREMENTS

The ambient temperature shall be within the limits of(40 to 90 degrees F) when the sealants are applied.

1.4 DELIVERY AND STORAGE

Materials shall be delivered to the job in the manufacturer's original unopened containers. The container label or accompanying data sheet shall include the following information as applicable: manufacturer, name of material, formula or specification number, lot number, color, date of manufacture, mixing instructions, shelf life, and curing time at the standard conditions for laboratory tests. Materials shall be handled and stored to prevent inclusion of foreign materials. Materials shall be stored at temperatures between (40 and 90 degrees F) unless otherwise specified by the manufacturer.

PART 2 PRODUCTS

2.1 BACKING

Backing shall be 25 to 33 percent oversize for closed cell unless otherwise indicated, and shall be compatible with joint substrates, sealants, and primers.

2.1.1 Rubber

Cellular rubber sponge backing shall be ASTM D 1056, Type 2, closed cell, Class A cross section.

2.1.2 Not Used

2.1.3 Synthetic Rubber

Synthetic rubber backing shall be ASTM C 509, Option I, Type I preformed rods or tubes.

2.1.4 Neoprene

Neoprene backing shall be ASTM D 1056, closed cell expanded neoprene cord Type 2, Class C, Grade 2C2.

2.2 BOND-BREAKER

Bond-breaker shall be as recommended by the sealant manufacturer to prevent adhesion of the sealant to backing or to bottom of the joint.

2.3 PRIMER

Primer shall be non-staining type as recommended by sealant manufacturer for the application.

2.4 Not Used

2.5 SEALANT

2.5.1 LATEX

Latex Sealant shall conform to ASTM C 834. Use: Interior surface for low movement, sound attenuation and paintable applications.

2.5.2 ELASTOMERIC

Elastomeric sealants shall conform to ASTM C 920 and the following:

a. Polysulfide Sealant: Type M, Grade NS, Class 25,
Use: Below grade on exterior for concrete and masonry .

b. Polyurethane sealant: Type M or S, Grade NS, Class 25,
Use: Exterior brick, metal, concrete and glass.

c. Silicone sealant: Type S, Grade NS, Class 25,
Use:Interior sanitary surfaces, counters, fixtures.

2.5.3 ACOUSTICAL

(S-5) Rubber or polymer-based acoustical sealant shall have a flame spread of 25 or less and a smoke developed rating of 50 or less when tested in accordance with ASTM E 84. Acoustical sealant shall have a consistency of 250 to 310 when tested in accordance with ASTM D 217, and shall remain flexible and adhesive after 500 hours of accelerated weathering as specified in ASTM C 734, and shall be non-staining. For use at common walls between guest rooms and between guest rooms and corridors.

2.6 SOLVENTS AND CLEANING AGENTS

Solvents, cleaning agents, and accessory materials shall be provided as recommended by the manufacturer.

PART 3 EXECUTION

3.1 GENERAL

3.1.1 Surface Preparation

The surfaces of joints to receive sealant or caulk shall be free of all frost, condensation and moisture. Oil, grease, dirt, chalk, particles of mortar, dust, loose rust, loose mill scale, and other foreign substances shall be removed from surfaces of joints to be in contact with the sealant. Oil and grease shall be removed with solvent and surfaces shall be wiped dry with clean cloths. For surface types not listed below, the sealant manufacturer shall be contacted for specific recommendations.

3.1.2 Concrete and Masonry Surfaces

Where surfaces have been treated with curing compounds, oil, or other such materials, the materials shall be removed by sandblasting or wire brushing. Laitance, efflorescence and loose mortar shall be removed from the joint cavity.

3.1.3 Steel Surfaces

Steel surfaces to be in contact with sealant shall be sandblasted or, if sandblasting would not be practical or would damage adjacent finish work, the metal shall be scraped and wire brushed to remove loose mill scale. Protective coatings on steel surfaces shall be removed by sandblasting or by a solvent that leaves no residue.

3.1.4 Aluminum Surfaces

Aluminum surfaces to be in contact with sealants shall be cleaned of temporary protective coatings. When masking tape is used for a protective cover, the tape and any residual adhesive shall be removed just prior to applying the sealant. Solvents used to remove protective coating shall be as recommended by the manufacturer of the aluminum work and shall be non-staining.

3.1.5 Wood Surfaces

Wood surfaces to be in contact with sealants shall be free of splinters and sawdust or other loose particles.

3.2 APPLICATION

3.2.1 Masking Tape

Masking tape may be placed on the finish surface on one or both sides of a joint cavity to protect adjacent finish surfaces from primer or sealant smears. Masking tape shall be removed within 10 minutes after joint has been filled and tooled.

3.2.2 Backing

Backing shall be installed to provide the indicated sealant depth. The installation tool shall be shaped to avoid puncturing the backing.

3.2.3 Bond-Breaker

Bond-breaker shall be applied to fully cover the bottom of the joint without contaminating the sides where sealant adhesion is required.

3.2.4 Primer

Primer shall be used on concrete masonry units, wood, or other porous surfaces in accordance with instructions furnished with the sealant. Primer shall be applied to the joint surfaces to be sealed. Surfaces adjacent to joints shall not be primed.

3.2.5 Sealant

Sealant shall be used before expiration of shelf life. Multi-component sealants shall be mixed according to manufacturer's printed instructions. Sealant in guns shall be applied with a nozzle of proper size to fit the width of joint. Joints shall be sealed as detailed in the drawings. Sealant shall be forced into joints with sufficient pressure to expel air and fill the groove solidly. Sealant shall be installed to the indicated depth without displacing the backing. Unless otherwise indicated, specified, or recommended by the manufacturer, the installed sealant shall be dry tooled to produce a uniformly smooth surface free of wrinkles and to ensure full adhesion to the sides of the joint; the use of solvents, soapy water, etc., will not be allowed. Sealants shall be installed free of air pockets, foreign embedded matter, ridges and sags. Sealer shall be applied over the sealant when and as specified by the sealant manufacturer.

3.3 CLEANING

The surfaces adjoining the sealed joints shall be cleaned of smears and other soiling resulting from the sealant application as work progresses.

-- End of Section --

SECTION TABLE OF CONTENTS

DIVISION 08 - DOORS & WINDOWS

SECTION 08110

STEEL DOORS AND FRAMES

02/95

PART 1 GENERAL

1.1 REFERENCES
1.2 SUBMITTALS
1.3 DELIVERY AND STORAGE
1.4 WARRANTY

PART 2 PRODUCTS

2.1 DOORS AND FRAMES
2.2 FIRE RATED DOORS
2.3 THERMAL INSULATED DOORS
2.4 WEATHERSTRIPPING
2.5 Not Used
2.6 FACTORY FINISH

PART 3 EXECUTION

3.1 INSTALLATION
3.1.1 Thermal Insulated Doors
3.2 FIELD PAINTED FINISH

-- End of Section Table of Contents --

SECTION 08110

STEEL DOORS AND FRAMES
02/95

PART 1 GENERAL

1.1 REFERENCES

The publications listed below form a part of this specification to the extent referenced. The publications are referred to in the text by basic designation only.

AMERICAN SOCIETY FOR TESTING AND MATERIALS (ASTM)

ASTM C 236	(1989; R 1993) Steady-State Thermal Performance of Building Assemblies by Means of a Guarded Hot Box
ASTM C 976	(1990) Thermal Performance of Building Assemblies by Means of a Calibrated Hot Box
ASTM D 2863	(1991) Measuring the Minimum Oxygen Concentration to Support Candle-Like Combustion of Plastics (Oxygen Index)
ASTM E 283	(1991) Determining the Rate of Air Leakage Through Exterior Windows, Curtain Walls, and Doors Under Specified Pressure Differences Across the Specimen

DOOR AND HARDWARE INSTITUTE (DHI)

DHI A115.1G	(1994) Installation Guide for Doors and Hardware

NATIONAL FIRE PROTECTION ASSOCIATION (NFPA)

NFPA 80	(1995) Fire Doors and Windows
NFPA 80A	(1993) Protection of Buildings from Exterior Fire Exposures
NFPA 101	(1997) Safety to Life from Fire in Buildings and Structures
NFPA 252	(1995) Fire Tests of Door Assemblies

STEEL DOOR INSTITUTE (SDOI)

SDOI SDI-100	(1991) Standard Steel Doors and Frames
SDOI SDI-106	(1996) Standard Door Type Nomenclature

SDOI SDI-107 (1984) Hardware on Steel Doors (Reinforcement - Application)

1.2 SUBMITTALS

Government approval is required for submittals with a "GA" designation; submittals having an "FIO" designation are for information only. The following shall be submitted in accordance with Section 01330 SUBMITTAL PROCEDURES:

SD-04 Drawings

Steel Doors and Frames; GA.

Drawings using standard door type nomenclature in accordance with SDOI SDI-106 indicating the location of each door and frame, elevation of each model of door and frame, details of construction, method of assembling sections, location and extent of hardware reinforcement, hardware locations, type and location of anchors for frames, and thicknesses of metal. Drawings shall include catalog cuts or descriptive data for the doors, frames, and weatherstripping including air infiltration data and manufacturers printed instructions.

SD-09 Reports

Fire Rated Doors; FIO.

A letter by a nationally recognized testing laboratory which identifies the product manufacturer, type, and model; certifying that the laboratory has tested a sample assembly in accordance with NFPA 252 and issued a current listing for same.

1.3 DELIVERY AND STORAGE

During shipment, welded unit type frames shall be strapped together in pairs with heads at opposite ends or shall be provided with temporary steel spreaders at the bottom of each frame; and knockdown type frames shall be securely strapped in bundles. Materials shall be delivered to the site in undamaged condition, and stored out of contact with the ground and under a weathertight covering permitting air circulation. Doors and assembled frames shall be stored in an upright position in accordance with DHI A115.1G. Abraded, scarred, or rusty areas shall be cleaned and touched up with matching finishes.

1.4 WARRANTY

Manufacturer's standard performance guarantees or warranties that extend beyond a 1 year period shall be provided.

PART 2 PRODUCTS

2.1 DOORS AND FRAMES

Doors and frames shall be factory fabricated in accordance with SDOI SDI-100 and the additional requirements specified herein. Door grade shall be heavy duty (Grade II) for interior doors and extra heavy duty (Grade III) for exterior doors unless otherwise indicated on the door and door frame schedules. Exterior doors and frames shall be designation G60 galvanized. Doors and frames shall be prepared to receive hardware conforming to the

templates and information provided under Section 08700 BUILDERS' HARDWARE. Doors and frames shall be reinforced, drilled, and tapped to receive mortised hinges, locks, latches, and flush bolts as required. Doors and frames shall be reinforced for surface applied hardware. Frames shall be welded type located as shown. Door frames shall be furnished with a minimum of three jamb anchors and one floor anchor per jamb. Anchors shall be not less than steel or diameter wire. For wall conditions that do not allow the use of a floor anchor, an additional jamb anchor shall be provided. Rubber silencers shall be furnished for installation into factory predrilled holes in door frames; adhesively applied silencers are not acceptable. Where frames are installed in plaster or masonry walls, plaster guards shall be provided on door frames at hinges and strikes. Reinforcing of door assemblies for closers and other required hardware shall be in accordance with SDOI SDI-100and the conditions of the fire door assembly listing when applicable. Exterior doors shall have top edges closed flush and sealed against water penetration. Door frames at exterior door locations shall be grouted solid.

2.2 FIRE RATED DOORS

Fire rated door assemblies shall bear the listing identification label of a nationally recognized testing laboratory qualified to perform tests of fire door assemblies in accordance with NFPA 252 and having a listing for the tested assemblies. The fire resistance rating shall be as shown. Doors exceeding the sizes for which listing label service is offered shall be in accordance with NFPA 252. Listing identification labels shall be constructed and permanently applied by a method which results in their destruction should they be removed.

2.3 THERMAL INSULATED DOORS

The interior of thermal insulated doors shall be completely filled with rigid plastic foam permanently bonded to each face panel. The thermal conductance (U-value) through the door shall not exceed when tested as an operational assembly in accordance with ASTM C 236 or ASTM C 976. Doors with cellular plastic cores shall have a minimum oxygen index rating of 22 percent when tested in accordance with ASTM D 2863.

2.4 WEATHERSTRIPPING

Unless otherwise specified in Section 08700 BUILDERS' HARDWARE, weatherstripping shall be as follows: Weatherstripping for head and jamb shall be manufacturer's standard elastomeric type of synthetic rubber, vinyl, or neoprene and shall be installed at the factory or on the jobsite in accordance with the door frame manufacturer's recommendations. Weatherstripping for bottom of doors shall be as shown. Air leakage rate of weatherstripping shall not exceed of crack when tested in accordance with ASTM E 283 at standard test conditions.

2.5 Not Used

2.6 FACTORY FINISH

Doors and frames shall be phosphatized, and primed with standard factory primer system.

PART 3 EXECUTION

3.1 INSTALLATION

Installation shall be in accordance with DHI A115.1G. Preparation for surface applied hardware shall be in accordance with SDOI SDI-107. Rubber silencers shall be installed in door frames after finish painting has been completed; adhesively applied silencers are not acceptable. Weatherstripping shall be installed at exterior door openings to provide a weathertight installation. Installation and operational characteristics of fire doors shall be in accordance with NFPA 80, NFPA 80A and NFPA 101. Hollow metal door frames shall be solid grouted in masonry walls.

3.1.1 Thermal Insulated Doors

Hardware and perimeter seals shall be adjusted for proper operation. Doors shall be sealed weathertight after installation of hardware and shall be in accordance with Section 07900 JOINT SEALING.

3.2 FIELD PAINTED FINISH

Steel doors and frames shall be field painted in accordance with Section 09900 PAINTING, GENERAL. Weatherstrips shall be protected from paint. Finish shall be free of scratches or other blemishes. Color shall be in accordance with Section 09915 COLOR SCHEDULE.

-- End of Section --

SECTION TABLE OF CONTENTS

DIVISION 08 - DOORS & WINDOWS

SECTION 08120

ALUMINUM STOREFRONT AND ENTRANCES

07/98

PART 1 GENERAL

1.1 REFERENCES
1.2 SYSTEM DESCRIPTION
1.3 PERFORMANCE REQUIREMENTS
1.3.1 Wind Load Performance
1.3.2 Water Penetration Performance
1.3.3 Air Infiltration Performance
1.3.4 Thermal Performance
1.4 SUBMITTALS
1.5 DELIVERY AND STORAGE
1.6 WARRANTY

PART 2 PRODUCTS

2.1 ALUMINUM DOORS AND FRAMES
2.1.1 Finishes
2.1.2 Welding and Fastening
2.1.3 Anchors
2.1.4 Hardware
2.1.5 Glazing
2.1.6 Weatherstripping
2.2 ALUMINUM WINDOW WALL FRAMES
2.2.1 Storefront Framing
2.2.2 Curtainwall Framing
2.2.3 Thermal Barrier
2.2.4 Sills
2.3 ALUMINUM DOORS
2.3.1 Full-Glazed Stile and Rail Doors
2.3.2 Thermally Clad, Full-Glazed Stile and Rail Doors
2.3.3 Door Hardware
2.3.3.1 Hardware Set for Exterior Door No. 1100A
2.3.3.2 Hardware Set for Doors No. 1113 and 1150
2.3.3.3 Hardware Set for Doors 2150, 3150 and 4150

PART 3 EXECUTION

3.1 INSTALLATION OF DOORS, FRAMES, AND ACCESSORIES
3.1.1 Protection of Aluminum
3.1.1.1 Paint
3.1.1.2 Nonabsorptive Tape or Gasket
3.1.2 Installation
3.1.3 Cleaning

-- End of Section Table of Contents --

SECTION 08120

ALUMINUM STOREFRONT AND ENTRANCES
07/98

PART 1 GENERAL

1.1 REFERENCES

The publications listed below form a part of this specification to the extent referenced. The publications are referred to in the text by basic designation only.

AMERICAN ARCHITECTURAL MANUFACTURERS ASSOCIATION (AAMA)

AAMA 1503.1	(1988) Voluntary Test Method for Thermal Transmittance and Condensation Resistance of Windows, Doors and Glazed Wall Sections

AMERICAN SOCIETY FOR TESTING AND MATERIALS (ASTM)

ASTM E 283	(1991) Determining the Rate of Air Leakage Through Exterior Windows, Curtain Walls, and Doors Under Specified Pressure Differences Across the Specimen
ASTM E 330	(1990) Structural Performance of Exterior Windows, Curtain Walls, and Doors by Uniform Static Air Pressure Difference
ASTM E 331	(1996) Water Penetration of Exterior Windows, Curtain Walls, and Doors by Uniform Static Air Pressure Difference

1.2 SYSTEM DESCRIPTION

Thermally broken, aluminum window wall framing system, with swing-type aluminum doors, of size and design shown on the drawings, shall be provided at the locations indicated. Storefront system shall be furnished complete with framing, doors, subframes, trim, and other accessories indicated, specified, or required for a complete installation.

1.3 PERFORMANCE REQUIREMENTS

1.3.1 Wind Load Performance

Doors and frames shall be of sufficient strength to withstand a design wind load of of supported area with a deflection of not more than 1/175 times the length of the member. Doors shall be tested in accordance with ASTM E 330 at a pressure not less than 1.5 times the design load.

1.3.2 Water Penetration Performance

Frames, fixed areas, and non-handicap complying doors shall have no water penetration when tested in accordance with ASTM E 331 with a test pressure of.

1.3.3 Air Infiltration Performance

Frames and fixed assemblies shall limit air infiltration to .0003 cu m/sq. m. (0.06 cfm/sq. ft.) of assembly surface area, measured at a reference differential pressure across assembly of 300 Pa (6.24 lbs./sq. ft.) in accordance with ASTM E 283.

1.3.4 Thermal Performance

Thermal performance when tested in accordance with AAMA 1503.1, shall have a maximum U-value of .58 and a minimum condensation resistance factor (crf) of 60.

1.4 SUBMITTALS

Government approval is required for submittals with a "GA" designation; submittals having an "FIO" designation are for information only. The following shall be submitted in accordance with Section 01330 SUBMITTAL PROCEDURES:

SD-01 Data

Aluminum Frames and Doors; FIO.

Manufacturer's descriptive data and catalog cuts including test reports verifying compliance with performance criteria.

SD-04 Drawings

Aluminum Frames and Doors; GA1.

Drawings showing the locations of each window wall system component shall be included with the drawings. Drawings shall show elevations of each frame type, component dimensions, details and method of anchorage, details of construction, location and installation of door hardware, shape and thickness of materials, and details of joints and connections.

SD-06 Instructions

Installation; FIO. Cleaning; FIO.

Manufacturer's installation instructions and cleaning instructions.

SD-09 Reports

Aluminum Doors; FIO.

For full-glazed doors, certified test reports from an independent testing laboratory, stating that doors are identical in design, materials, and construction to a door that has been tested and meets all test and specified requirements.

SD-13 Certificates

Installer Qualifications; FIO.

Manufacturer's certification that installer is qualified and trained to install the specified aluminum storefront framing system. Evidence that

installer has a minimum of five years of experience on installations of a similar size and scope.

SD-14 Samples

Finishes; GA1.

Three samples of the anodized coating, showing the extreme color range.

1.5 DELIVERY AND STORAGE

Materials delivered to the jobsite shall be inspected for damage, and shall be unloaded with a minimum of handling. Storage shall be in a dry location with adequate ventilation, free from dust, water, and other contaminants, and which permits easy access for inspecting and handling. Materials shall be neatly stored on the floor, properly stacked on nonabsorptive strips or wood platforms. Doors and frames shall not be covered with tarps, polyethylene film, or similar coverings.

1.6 WARRANTY

Manufacturer's three year warranty or performance guarantee to cover complete system for failure to meet specified requirements shall be provided.

PART 2 PRODUCTS

2.1 ALUMINUM DOORS AND FRAMES

Extrusions shall comply with ASTM B 221, Alloy 6063-T5, except alloy used for anodized color coatings shall be required to produce the specified color. Aluminum sheets and strips shall comply with ASTM B 209, alloy and temper best suited for the purpose. Fasteners shall be hard aluminum or stainless steel.

2.1.1 Finishes

Finish shall be clear anodized. Clear anodized finish shall be in accordance with AA-M10C22A41.

2.1.2 Welding and Fastening

Where possible, welds shall be located on unexposed surfaces. Welds required on exposed surfaces shall be smoothly dressed. Welding shall produce a uniform texture and color in the finished work, free of flux and spatter. Exposed screws or bolts will be permitted only at inconspicuous locations and shall have heads countersunk.

2.1.3 Anchors

Anchors shall be stainless steel or steel with a hot-dipped galvanized finish. Anchors of the sizes and shapes required shall be provided for securing aluminum frames to adjacent construction. Anchors shall be placed near top and bottom of each jamb and at intermediate points not more than apart. Transom bars shall be anchored at ends, and mullions shall be anchored at head and sill. Where indicated on the drawings, vertical mullion reinforcement shall be of sufficient length to extend up to the overhead structural slab or framing and be securely attached thereto. Where indicated on the drawings, the bottom of each frame shall be anchored

to the rough floor construction with thick stainless steel angle clips secured to the back of each jamb and to floor construction. Stainless steel bolts and expansion rivets shall be used for fastening clip anchors.

2.1.4 Hardware

Hardware sets for aluminum doors are described in ALUMINUM DOORS below. Doors and frames shall be cut, reinforced, drilled, and tapped at the factory to receive template hardware. Reinforcement shall be provided in the core of doors as required to receive locks, door closers, and other hardware. Doors to receive surface applied hardware shall be reinforced as required.

2.1.5 Glazing

Glazing shall be as specified in Section 08810 GLASS AND GLAZING. Metal glazing beads, vinyl inserts, and glazing gaskets shall be provided for securing glass. Glass stops shall be tamperproof on exterior side.

2.1.6 Weatherstripping

Weatherstripping shall be continuous silicone-treated wool pile type, or a type recommended by the door manufacturer and shall be provided on head and jamb of exterior door frames. Air leakage rate of weatherstripping shall not exceed 0.5 cubic feet per minute per lineal foot of crack when tested in accordance with ASTM E 283 at standard test conditions.

2.2 ALUMINUM WINDOW WALL FRAMES

The window wall frames shall be thermally broken, and shall accommodate 25 mm (1 inch) thick insulating glass. Frames shall be fabricated of extruded aluminum shapes to contours as shown on the drawings. Shapes shown are representations of design, function, and required profile. Minimum metal wall thickness shall be except glazing beads, moldings, and trim shall be not less than Frames that are to receive glass shall have removable snap-on glass stops and glazing beads. Joints in frame members shall be milled to a hairline tight fit so that raw edges of the assembly are not visible, sealed internally to prevent water infiltration, reinforced, and secured mechanically by appropriate screws or by screw spline attachment.

2.2.1 Storefront Framing

Storefront window frames shall be 50 x 114 mm (2 x 4-1/2 inches) nominal dimension with glass units centered in the frame. The framing system shall have flush glazing stops, an internal weep drainage system and be exterior glazed.

2.2.2 Curtainwall Framing

Curtainwall frames shall be self-supporting, with pressure plate and covers attached to the tongue of back member. Frame size shall be 63 x 160mm (2-1/2 x 6 inches), unless noted otherwise on the Drawings, with glass units supported at the exterior of the system.

2.2.3 Thermal Barrier

Thermal barrier shall consist of a two-part, chemically curing, high density polyurethane which is mechanically and adhesively bonded to the aluminum.

2.2.4 Sills

Sills shall be fabricated from minimum 1.27mm (.050 inch) thick aluminum with finish to match storefront and curtainwall systems. Sill profiles and sizes shall be as shown on Drawings. Provide separate concealed keeper strip for securing exposed face of sill in place.

2.3 ALUMINUM DOORS

Doors shall be not less than thick. Clearances at hinge stiles, lock stiles and top rails, floors and thresholds, shall comply with manufacturer's standard. Single-acting doors shall be beveled at lock and meeting stile edges.

2.3.1 Full-Glazed Stile and Rail Doors

Doors shall have medium width stiles and rails as shown, and shall be fabricated from extruded aluminum hollow seamless tubes 44.5 mm (1-3/4 inches) in depth with a nominal wall thickness of 3.2mm (1/8 inch). Doors shall be single-glazed. Top and bottom rail shall be fastened together by means of welding,. or by (3/8 inch) diameter plated tensioned steel tie rods. Components shall be prepared with internal reinforcement for door hardware and door operator hinge hardware. Extruded aluminum snap-in glazing beads shall be provided on interior side of doors. Extruded aluminum theft-proof snap-in glazing beads or fixed glazing beads shall be provided on exterior or security side of doors. Glazing beads shall have vinyl insert glazing gaskets, designed to receive glass of thickness required. Glass is specified in Section 08810 GLASS AND GLAZING.

2.3.2 Thermally Clad, Full-Glazed Stile and Rail Doors

Doors shall be thermally improved, with 88 mm (3-1/2 inch) wide medium stiles and rails, and shall be fabricated from extruded aluminum hollow seamless tubes 44.5 mm (1-3/4 inches) in depth with a nominal wall thickness of 3.2 mm (1/8 inch). Door corners shall be joined using mechanical clip fasteners and penetration welds at four weld points per corner. Thermal separators for door cladding shall be rigid polyvinylchloride (PVC) extrusions. Alluminum cladding shall be interlocked with PVC separators at both edges and mechanically secured to door without adhesives. Frames shall be prepared with internal reinforcement for door hardware and door operator hinge hardware. Door framing shall have a glass pocket depth of 19 mm (3/4 inch) and shall provide for a flush glazing appearance with no projecting stops. Doors shall be double-glazed. Extruded aluminum snap-in glazing beads shall be provided on interior side of doors. Extruded aluminum theft-proof snap-in glazing beads or fixed glazing beads shall be provided on exterior or security side of doors. Glass is specified in Section 08810 GLASS AND GLAZING.

2.3.3 Door Hardware

Additional specification requirements for the hardware components listed below are described in 08700 BUILDERS HARDWARE.

2.3.3.1 Hardware Set for Exterior Door No. 1100A

Provide the following:

3 pr.ea Hinges with flat button tips; finish 626/652 (US 26).

2 ea. Exit device; rim style exit device with push bar, function #08; with #07 lever style, less outside trim plate.

1 ea. Removable mullion, 60.3 by 88.9 mm (2-3/8 by 3-1/2 inch) (by Von Duprin).

2 ea. Closer; heavy duty, surface mounted with 90 degree back check with integral stop (no hold open); sprayed aluminum finish.

1 ea. Threshold; full saddle.

1 ea. Weatherstripping and Astragal; manufacturer's standard system.

2.3.3.2 Hardware Set for Doors No. 1113 and 1150

Provide the following:

3 pr. Hinges with flat button tips.

1 ea. Electronic Lockset supplied by Section 08700.

1 ea. Closer; heavy duty, surface mounted with 90 degree back check with integral stop (no hold open); sprayed aluminum finish.

1 ea. Power assisted door operator to be provided by Section 08120. Refer to Section 08700 for description. Coordinate installation with electronic lockset.

1 ea. Threshold; full saddle at all other conditions.

1 ea. Weatherstripping; manufacturer's standard system.

2.3.3.3 Hardware Set for Doors 2150, 3150 and 4150

2 pr. Hinges with flat button tips.

1 ea. Push-Pull: Equal to Hiawatha 535B x 1081LBP, 25 (1 inch) diameter, US 28 finish.

1 ea. Deadbolt; Adams Rite MS1850S Series (ANSI/BHMA Type E8211) with deadbolt and keyed cylinder lock on interior side only.

1 ea. Closer; heavy duty, surface mounted with 90 degree back check with integral stop (no hold open); sprayed aluminum finish.

1 ea. Threshold; full saddle.

1 ea. Weatherstripping; manufacturer's standard system.

PART 3 EXECUTION

3.1 INSTALLATION OF DOORS, FRAMES, AND ACCESSORIES

3.1.1 Protection of Aluminum

Aluminum shall not be used where it will be in contact with copper or where it will contact water which flows over copper surfaces. Aluminum that will

be in contact with wet or pressure-treated wood, mortar, concrete, masonry, or ferrous metals shall be protected against galvanic or corrosive action by one of the following methods.

3.1.1.1 Paint

Aluminum surfaces to be protected shall be solvent cleaned and given a coat of zinc-molybdate primer and one coat of aluminum paint.

3.1.1.2 Nonabsorptive Tape or Gasket

Nonabsorptive tape or gasket shall be placed between the adjoining surfaces and shall be cemented to the aluminum surface using a cement compatible with aluminum.

3.1.2 Installation

Frames and framing members shall be accurately set in position to receive adjoining components. Frames shall be plumb, square, level, and in alignment, and securely anchored to adjacent construction. Metal-to-metal joints between framing members and joints between framing members and building surfaces shall be sealed as specified in Section 07900 JOINT SEALING. Doors shall be accurately hung with proper clearances, and adjusted to operate properly.

3.1.3 Cleaning

Doors and frames shall be cleaned in accordance with the manufacturer's approved instructions.

-- End of Section --

SECTION TABLE OF CONTENTS

DIVISION 08 - DOORS & WINDOWS

SECTION 08210

WOOD DOORS

05/97

PART 1 GENERAL

1.1 REFERENCES
1.2 GENERAL REQUIREMENTS
1.2.1 Standard Products
1.2.2 Marking
1.3 SUBMITTALS
1.4 STORAGE
1.5 HARDWARE
1.6 Not Used
1.7 WARRANTY

PART 2 PRODUCTS

2.1 GENERAL FABRICATION REQUIREMENTS
2.1.1 Edge Sealing
2.1.2 Not Used
2.1.3 Adhesives
2.1.4 Prefitting
2.2 FLUSH DOORS
2.2.1 Core Construction
2.2.1.1 Solid Cores
2.2.2 Face Panels
2.2.2.1 Natural Finished Wood Veneer Doors
2.2.2.2 Painted Wood Veneer Doors
2.3 Not Used
2.4 FIRE RATED DOORS
2.4.1 Reinforcement Blocking
2.4.2 Stile Edges
2.5 MOULDING AND EDGING
2.6 Not Used
2.7 Not Used
2.8 FINISHING
2.8.1 Factory Coated Natural Finish
2.8.2 Factory Coated Paint Finish

PART 3 EXECUTION

3.1 INSTALLATION OF DOORS
3.1.1 General Use Doors
3.1.2 Fire Doors

-- End of Section Table of Contents --

SECTION 08210

WOOD DOORS
05/97

PART 1 GENERAL

1.1 REFERENCES

The publications listed below form a part of this specification to the extent referenced. The publications are referred to in the text by basic designation only.

ARCHITECTURAL WOODWORK INSTITUTE (AWI)

AWI-02	(1994) Architectural Woodwork Quality Standards, Guide Specifications and Quality Certification Program

NATIONAL FIRE PROTECTION ASSOCIATION (NFPA)

NFPA 80	(1995) Fire Doors and Windows
NFPA 101	(1997) Safety to Life from Fire in Buildings and Structures
NFPA 252	(1995) Fire Tests of Door Assemblies

NATIONAL WOOD WINDOW & DOOR ASSOCIATION (NWWDA)

NWWDA I.S. 1-A	(1993) Architectural Wood Flush Doors

1.2 GENERAL REQUIREMENTS

1.2.1 Standard Products

Doors shall be of the type, size, and design indicated on the drawings, and shall be the standard products of manufacturers regularly engaged in the manufacture of wood doors.

1.2.2 Marking

Each door shall bear a stamp, brand, or other identifying mark indicating quality and construction of the door. The identifying mark or a separate certification shall include identification of the standard on which construction of the door is based, identity of the manufacturing plant, identification of the standard under which preservative treatment, if used, was made, and identification of the doors having a Type I glue bond.

1.3 SUBMITTALS

Government approval is required for submittals with a "GA" designation; submittals having an "FIO" designation are for information only. The following shall be submitted in accordance with Section 01330 SUBMITTAL PROCEDURES:

SD-04 Drawings

Wood Doors ; GA1.

Drawings indicating the location of each door, elevation of each type of door, details of construction, marks to be used to identify the doors, and location and extent of hardware blocking. Drawings shall include catalog cuts or descriptive data for doors, to be used.

SD-14 Samples

Factory Stained and Coated Finish; GA1.

Three samples of factory applied stained and painted finishes on wood samples with specified veneers. Samples to be 200 x 200 mm (8 x 8 inches) in size.

1.4 STORAGE

Doors shall be stored in fully covered areas and protected from damage and from extremes in temperature and humidity. Doors shall be stored on supports to prevent warping or twisting, and to provide ventilation. Factory cartons or wrappers shall be kept intact until installation.

1.5 HARDWARE

Hardware, including weatherstripping and thresholds, is specified in Section 08700 BUILDERS' HARDWARE.

1.6 Not Used

1.7 WARRANTY

Manufacturer's standard performance guarantees or warranties that extend beyond a 1 year period shall be provided.

PART 2 PRODUCTS

2.1 GENERAL FABRICATION REQUIREMENTS

2.1.1 Edge Sealing

Wood end-grain exposed at edges of doors shall be sealed prior to shipment.

2.1.2 Not Used

2.1.3 Adhesives

Adhesives shall be in accordance with NWWDA I.S. 1-A, for Type II Bond Doors (water-repellent) for interior doors. Adhesive for doors to receive a transparent finish shall be nonstaining. Adhesives shall contain no formaldehydes.

2.1.4 Prefitting

Doors shall be furnished prefitted or unfitted at the option of the Contractor.

2.2 FLUSH DOORS

Flush doors shall be solid core and shall conform to NWWDA I.S. 1-A, except for the one year acclimatization requirement in paragraph T-2, which shall not apply. Wood doors shall be 5-ply construction with faces, stiles, and rails bonded to the cores.

2.2.1 Core Construction

2.2.1.1 Solid Cores

Door construction shall be bonded particle board core or mineral core with vertical and horizontal edges bonded to the core.

2.2.2 Face Panels

2.2.2.1 Natural Finished Wood Veneer Doors

Veneer doors to receive stained natural finish shall be Premium Grade, book matched, Rotary Select White Birch veneer in accordance with NWWDA I.S. 1-A. Vertical stile strips shall be selected to provide edges of the same species and color as the face veneer. Door finish shall be in accordance with paragraph FINISHING.

2.2.2.2 Painted Wood Veneer Doors

Veneer doors to receive paint finish shall be Economy Grade with medium density overlay veneer in accordance with NWWDA I.S. 1-A. Door finish shall be in accordance with paragraph FINISHING.

2.3 Not Used

2.4 FIRE RATED DOORS

Fire rated door assemblies shall bear the listing identification label of a nationally recognized testing laboratory qualified to perform tests of fire door assemblies in accordance with NFPA 252 and having a listing for the tested assemblies. The specific time interval rating on the labels shall be as shown. Door assemblies shall be in accordance with NFPA 80. Listing identification on labels shall be constructed and permanently applied by a method which results in their destruction should they be removed. Fire rated doors shall be mineral core with 60 or 90 minute ratings or particleboard core with 20 minute rating, as located on drawings.

2.4.1 Reinforcement Blocking

Fire rated doors shall be provided, as required, with hardware reinforcement blocking, and top, bottom, and intermediate rail blocking. Lock blocks shall be manufacturer's standard. Reinforcement blocking shall be in compliance with the manufacturer's labeling requirements. Reinforcement blocking shall not be of mineral material.

2.4.2 Stile Edges

Composite fire rated doors shall be provided with vertical stile edges that do not contain fire retardant salts. Vertical stiles shall be of the same species and/or color as the face veneer.

2.5 MOULDING AND EDGING

Moulding and edging shall be as shown. Wood species for transparent finished doors shall be compatible with veneer.

2.6 Not Used

2.7 Not Used

2.8 FINISHING

2.8.1 Factory Coated Natural Finish

Natural finished wood veneer doors indicated to receive a stained and coated natural finish, shall be given a factory applied transparent finish conforming to AWI-02, Section 1500, Premium Grade, dark stain, satin sheen, and close grain effect. Finish shall meet or exceed performance standards of AWI factory finish system Number TR6 (catalyzed polyurethane). Color of the natural finish shall be in accordance with Section 09915 COLOR SCHEDULE . Edges of unfitted doors shall be field finished after fitting to the frames.

2.8.2 Factory Coated Paint Finish

Painted wood veneer doors indicated to receive a painted finish shall be given a factory applied opaque finish conforming to AWI-02, Section 1500, system number OP-6 (catalyzed polyurethane)]. Color of factory coated paint finish shall be in accordance with Section 09915 COLOR SCHEDULE.

PART 3 EXECUTION

3.1 INSTALLATION OF DOORS

3.1.1 General Use Doors

Doors shall be fit, hung, and trimmed as required. Door shall have a clearance of (1/8 inch) at the sides and top and shall have a bottom clearance of (1/4 inch) over thresholds and (1/2 inch) at other locations unless otherwise shown on door schedule. The lock edge or both edges of doors shall be beveled at the rate of (1/8 inch) in (2 inches). Cuts made on the job shall be sealed immediately after cutting, using a clear varnish or sealer. Bottom of doors shall be undercut to allow clear door swing over carpeted areas. Vertical edges of doors which have not been rounded or beveled at the factory shall be eased when the doors are installed.

3.1.2 Fire Doors

Installation, hardware, and operational characteristics shall conform to NFPA 80 and NFPA 101 and shall be in strict conformance with the manufacturer's printed instructions. Properly sized pilot holes shall be drilled for screws in door edges. Factory applied labels shall remain intact where installed. Labeled hinge stile edge and top edge of door shall not be trimmed. Lockstile edge and bottom edge may be trimmed only to the extent recommended by the door manufacturer.

-- End of Section --

SECTION TABLE OF CONTENTS

DIVISION 08 - DOORS & WINDOWS

SECTION 08330

OVERHEAD ROLLING DOORS

06/97

PART 1 GENERAL

1.1 REFERENCES
1.2 DESCRIPTION
1.2.1 Not Used
1.2.2 Operational Cycle Life
1.3 SUBMITTALS
1.4 DELIVERY AND STORAGE
1.5 WARRANTY
1.6 OPERATION AND MAINTENANCE MANUALS

PART 2 PRODUCTS

2.1 OVERHEAD ROLLING DOORS
2.1.1 Curtains
2.1.1.1 Non-Insulated Curtains
2.1.2 Endlocks and Windlocks
2.1.3 Bottom Bar
2.1.4 Guides
2.1.5 Barrel
2.1.6 Springs
2.1.7 Brackets
2.1.8 Hoods
2.1.9 Not Used
2.1.10 Not Used
2.1.11 Operation
2.1.11.1 Manual Push-Up Operation
2.1.11.2 [Enter Appropriate Subpart Title Here]
2.1.12 Not Used
2.1.13 Locking
2.1.14 Finish
2.2 FIRE DOORS

PART 3 EXECUTION

3.1 INSTALLATION
3.2 FIELD PAINTED FINISH
3.3 TESTS

-- End of Section Table of Contents --

SECTION 08330

OVERHEAD ROLLING DOORS
06/97

PART 1 GENERAL

1.1 REFERENCES

The publications listed below form a part of this specification to the extent referenced. The publications are referred to in the text by basic designation only.

AMERICAN SOCIETY FOR TESTING AND MATERIALS (ASTM)

ASTM A 653/A 653M	(1997) Steel Sheet, Zinc-Coated (Galvanized) or Zinc-Iron Alloy-Coated (Galvannealed) by the Hot-Dip process

NATIONAL FIRE PROTECTION ASSOCIATION (NFPA)

NFPA 80	(1995) Fire Doors and Fire Windows

1.2 DESCRIPTION

Overhead rolling doors shall be spring counterbalanced, rolling type, with interlocking slats, complete with guides, fastenings, hood, brackets, and operating mechanisms, and shall be designed for use on openings as indicated. Fire doors shall bear the Underwriters Laboratories, Warnock Hersey, Factory Mutual or other nationally recognized testing laboratory label for Class B rating. Each door shall be provided with a permanent label showing the manufacturer's name and address and the model/serial number of the door. Doors in excess of the labelled size shall be deemed oversize and shall be provided with a listing agency oversize label, or a listing agency oversize certificate, or a certificate signed by an official of the manufacturing company certifying that the door and operator have been designed to meet the specified requirements.

1.2.1 Not Used

1.2.2 Operational Cycle Life

All portions of the door and door operating mechanism that are subject to movement, wear, or stress fatigue shall be designed to operate through a minimum number of 10 cycles per day. One complete cycle of door operation is defined as when the door is in the closed position, moves to the full open position, and returns to the closed position.

1.3 SUBMITTALS

Government approval is required for submittals with a "GA" designation; submittals having an "FIO" designation are for information only. The following shall be submitted in accordance with Section 01330 SUBMITTAL PROCEDURES:

SD-01 Data

Overhead Rolling Door Unit; FIO.

Manufacturer's catalog data, test data, and summary of forces and loads on the walls/jambs.

SD-04 Drawings

Overhead Rolling Door Unit; GA1.

Drawings showing the location of each door including schedules. Drawings shall include elevations of each door type, details and method of anchorage, details of construction, location and installation of hardware, shape and thickness of materials, details of joints and connections, and details of guides, power operators, controls, and other fittings.

SD-06 Instructions

Overhead Rolling Door Unit; FIO.

Manufacturer's preprinted installation instructions.

SD-14 Samples

Overhead Rolling Door Unit; FIO.

Manufacturer's standard color samples of factory applied finishes.

SD-19 Operation and Maintenance Manuals

Operation Manual; FIO.

Maintenance and Repair Manual ; FIO.

Six copies of the system operation manual and system maintenance and repair manual] for each type of door and control system.

1.4 DELIVERY AND STORAGE

Doors shall be delivered to the jobsite wrapped in a protective covering with the brands and names clearly marked thereon. Doors shall be stored in a dry location that is adequately ventilated and free from dirt and dust, water, and other contaminants, and in a manner that permits easy access for inspection and handling.

1.5 WARRANTY

Manufacturer's standard performance guarantees or warranties that extend beyond a 1-year period shall be provided.

1.6 OPERATION AND MAINTENANCE MANUALS

Operating instructions outlining the step-by-step procedures required for motorized door and shutter operation for the overhead rolling door unit shall be provided. The instructions shall include the manufacturer's name, model number, service manual, parts list, and brief description of all equipment and their basic operating features. Maintenance instructions

listing routine maintenance procedures, possible breakdowns and repairs, troubleshooting guides, and simplified diagrams for the equipment as installed shall be provided. A complete list of parts and supplies, source of supply, and a list of the high mortality maintenance parts shall be provided.

PART 2 PRODUCTS

2.1 OVERHEAD ROLLING DOORS

Doors shall be surface-mounted type with guides at jambs set back a sufficient distance to clear the opening and as shown on Drawings.

2.1.1 Curtains

The curtains shall roll up on a barrel supported at the head of opening on brackets, and shall be balanced by helical torsion springs. Slats for fire doors shall be not less than 22 GA (0.029 inches)G90 galvanized steel.

2.1.1.1 Non-Insulated Curtains

Curtains shall be formed of interlocking slats of shapes standard with the manufacturer.

2.1.2 Endlocks and Windlocks

The ends of each alternate slat for interior doors shall have steel or malleable iron endlocks of manufacturer's stock design. Endlocks shall be provided in accordance with manufacturer's listing on fire doors when required by test results performed by the code listing agency.

2.1.3 Bottom Bar

The curtain shall have a standard bottom bar consisting of two hot-dip galvanized steel angles for steel doors.

2.1.4 Guides

Guides shall be stainless steel shapes, of a size and depth to provide proper clearance for operation. Guides shall be attached to adjoining construction with fasteners recommended by the manufacturer. Spacing of fasteners shall be as required to meet the minimum design windload.

2.1.5 Barrel

The barrel shall be steel pipe or commercial welded steel tubing of proper diameter for the size of curtain. Deflection shall not exceed of span. Ends of the barrel shall be closed with metal plugs, machined to fit the pipe. Aluminum plugs are acceptable on non-fire door barrels.

2.1.6 Springs

Oil tempered helical steel counter-balance torsion springs shall be installed within the barrel and shall be capable of producing sufficient torque to assure easy operation of the door curtain. Access shall be provided for spring tension adjustment from outside of the bracket without removing the hood.

2.1.7 Brackets

Brackets shall be of steel plates to close the ends of the roller-shaft housing, and to provide mounting surfaces for the hood. An operation bracket hub and shaft plugs shall have sealed prelubricated ball bearings.

2.1.8 Hoods

Hoods shall be steel with minimum bare metal thickness of formed to fit contour of the end brackets, and shall be reinforced with steel rods, rolled beads, or flanges at top and bottom edges. Multiple segment and single piece hoods shall be provided with support brackets of the manufacturer's standard design as required for adequate support.

2.1.9 Not Used

2.1.10 Not Used

2.1.11 Operation

Doors shall be of manual push-up operation type. Equipment shall be designed and manufactured for usage in non-hazardous areas.

2.1.11.1 Manual Push-Up Operation

One lifting handle shall be provided on each side of the door. The maximum force required for lift-handle operation shall not exceed Pole hooks shall be provided on bottom rail of doors over)high.

2.1.11.2 [Enter Appropriate Subpart Title Here]

2.1.12 Not Used

2.1.13 Locking

Locking shall consist of interior slide bolts, suitable for padlock by others, for manual push-up doors.

2.1.14 Finish

Steel slats and hoods shall be hot-dip galvanized G90 in accordance with ASTM A 653/A 653M, and shall be treated for paint adhesion and shall receive a factory baked-on finish coat. The paint system shall withstand a minimum of 1500 hours without blistering, bubbling, or rust. Surfaces other than slats, hood, and faying surfaces shall be cleaned and treated to assure maximum paint adherence and shall be given a factory dip or spray coat of rust inhibitive metallic oxide or synthetic resin primer. Color shall be light gray.

2.2 FIRE DOORS

Fire rated rolling doors shall be provided at locations shown on the drawings. Fire doors shall conform to the requirements specified herein and to NFPA 80 for the class indicated. Doors shall bear the label or oversize label, or be provided with oversize certification of a recognized testing agency indicating the listed rating for the fire door. The construction details necessary for the listed rating shall take precedence over conflicting details shown or specified herein. Fire doors shall be complete with hardware, accessories, and automatic closing device. An automatic closing device shall operate upon activation of smoke detectors either side of door which are tied to the building's fire alarm system. Doors shall be provided with the correct voltage requirement to match the

fire alarm panel ouput. Door manufacturer shall verify voltage with fire alarm panel supplier.

PART 3 EXECUTION

3.1 INSTALLATION

Doors shall be installed in accordance with approved detail drawings and manufacturer's instructions. Anchors and inserts for guides, brackets, [motors,] [switches,] hardware, and other accessories shall be accurately located. Upon completion, doors shall be free from warp, twist, or distortion. Doors shall be lubricated, properly adjusted, and demonstrated to operate freely. Fire doors shall be installed in conformance with the requirements of NFPA 80 and the manufacturer's instructions.

3.2 FIELD PAINTED FINISH

All portions of steel doors, frames and guides which are recessed, yet exposed to view, shall be field painted in accordance with Section 09900 PAINTING, GENERAL. Finish shall be free of scratches or other blemishes. Color shall be flat black where component is recessed.

3.3 TESTS

The fire doors shall be drop tested in accordance with NFPA 80 to show proper operation and full automatic closure and shall be reset in accordance with the manufacturer's instructions. A written record of initial test shall be provided to the Contracting Officer.

-- End of Section --

SECTION TABLE OF CONTENTS

DIVISION 08 - DOORS & WINDOWS

SECTION 08520

ALUMINUM WINDOWS

08/98

PART 1 GENERAL

1.1 REFERENCES
1.2 WINDOW PERFORMANCE
1.2.1 Structural Performance
1.2.2 Air Infiltration
1.2.3 Water Penetration
1.2.4 Thermal Performance
1.2.5 Life Safety Criteria
1.2.6 Life Cycle Testing
1.2.7 Condensation Resistance
1.3 SUBMITTALS
1.4 QUALIFICATION
1.5 MOCK-UPS
1.6 DELIVERY AND STORAGE
1.7 WARRANTY

PART 2 PRODUCTS

2.1 ALUMINUM WINDOW TYPES
2.1.1 Fixed Windows
2.1.2 Horizontal-Sliding Windows
2.2 WEATHERSTRIPPING
2.3 INSECT SCREENS
2.4 ACCESSORIES
2.4.1 Fasteners
2.4.2 Hardware
2.4.3 Window Anchors
2.4.4 Sub Frames and Trim
2.5 GLASS AND GLAZING
2.6 FINISH
2.6.1 Anodized Aluminum Finish
2.6.2 Not Used
2.6.3 Not Used
2.6.4 Not Used

PART 3 EXECUTION

3.1 INSTALLATION
3.2 ADJUSTMENTS AND CLEANING
3.2.1 Hardware Adjustments
3.2.2 Cleaning

-- End of Section Table of Contents --

SECTION 08520

ALUMINUM WINDOWS
08/98

PART 1 GENERAL

1.1 REFERENCES

The publications listed below form a part of this specification to the extent referenced. The publications are referred to in the text by basic designation only.

ALUMINUM ASSOCIATION (AA)

AA DAF-45	(1980; R 1993) Designation System for Aluminum Finishes

AMERICAN ARCHITECTURAL MANUFACTURERS ASSOCIATION (AAMA)

AAMA AAMA/NWWDA 101 I.S.2	(1997) Voluntary Specifications for Aluminum, Vinyl (PVC) and Wood Windows and Glass Doors
AAMA 910	(1993) Voluntary Test for Life Cycle Testing of Windows and Doors
AAMA 1503.1	(1988) Voluntary Test Method for Thermal Transmittance and Condensation Resistance of Windows, Doors and Glazed Wall Sections

AMERICAN SOCIETY FOR TESTING AND MATERIALS (ASTM)

ASTM E 283	(1991) Determining the Rate of Air Leakage Through Exterior Windows, Curtain Walls, and Doors Under Specified Pressure Differences Across the Specimen
ASTM E 330	(1990) Structural Performance of Exterior Windows, Curtain Walls, and Doors by Uniform Static Air Pressure Difference
ASTM E 547	(1996) Water Penetration of Exterior Windows, Curtain Walls, and Doors by Cyclic Static Air Pressure Differential

INSECT SCREENING WEAVERS ASSOCIATION (ISWA)

ISWA IWS 089	(1990) Recommended Standards and Specifications for Insect Wire Screening (Wire Fabric)

NATIONAL FIRE PROTECTION ASSOCIATION (NFPA)

NFPA 101	(1997; Errata 97-1) Life Safety Code

SCREEN MANUFACTURERS ASSOCIATION (SMA)

SMA ANSI/SMA 1004	(1987) Aluminum Tubular Frame Screens for Windows

1.2 WINDOW PERFORMANCE

Aluminum windows shall be designed to meet or exceed AAMA 101 HS-AW40 type performance requirements. Testing requirements shall be performed by an independent testing laboratory or agency.

1.2.1 Structural Performance

Structural test pressures on window units shall be for positive load (inward) and negative load (outward) in accordance with ASTM E 330. After testing, there shall be no glass breakage, permanent damage to fasteners, hardware parts, support arms or actuating mechanisms or any other damage which could cause window to be inoperable. There shall be no permanent deformation of any main frame, sash or ventilator member in excess of the requirements established by AAMA AAMA/NWWDA 101 I.S.2 for the window types and classification specified in this section.

1.2.2 Air Infiltration

Air infiltration shall not exceed the amount established by AAMA AAMA/NWWDA 101 I.S.2 for each window type when tested in accordance with ASTM E 283.

1.2.3 Water Penetration

Water penetration shall not exceed the amount established by AAMA AAMA/NWWDA 101 I.S.2 for each window type when tested in accordance with ASTM E 547.

1.2.4 Thermal Performance

Thermal transmittance (U-value) for the complete window unit shall not exceed 3.4 w/sq.m times K (0.60 btu/hr times square f times F)R3.33 when tested in accordance with AAMA 1503.1.

1.2.5 Life Safety Criteria

Windows at all guestrooms shall conform to NFPA 101 Life Safety Code for rescue and/or second means of escape.

1.2.6 Life Cycle Testing

Windows must meets the performance levels specified in AAMA AAMA/NWWDA 101 I.S.2 for each window type when tested in accordance with AAMA 910.

1.2.7 Condensation Resistance

The Condensation Resistance Factor shall be no less than 60 when the window

unit is tested in accordance with AAMA 1503.1.

1.3 SUBMITTALS

Government approval is required for submittals with a "GA" designation; submittals having an "FIO" designation are for information only. The following shall be submitted in accordance with Section 01330 SUBMITTAL PROCEDURES:

SD-01 Data

Aluminum Windows; FIO.

Manufacturer's descriptive data and catalog cut sheets.

SD-04 Drawings

Aluminum Windows; GA1. Insect Screens; GA1.

Drawings indicating elevations of window, rough-opening dimensions for each type and size of window, full-size sections, thicknesses of metal, fastenings, methods of installation and anchorage, connections with other work, type of wall construction, size and spacing of anchors, method of glazing, types and locations of operating hardware, mullion details, weatherstripping details, screen details including method of attachment , and window schedules showing locations of each window type.

SD-06 Instructions

Aluminum Windows; FIO.

Manufacturer's preprinted installation instructions and cleaning instructions.

SD-09 Reports

Aluminum Windows; FIO.

Reports for each type of aluminum window attesting that identical windows have been tested and meet all performance requirements established under paragraph WINDOW PERFORMANCE.

SD-13 Certificates

Aluminum Windows; FIO.

Certificates stating that the aluminum windows are AAMA certified conforming to requirements of this section. Labels or markings permanently affixed to the window will be accepted in lieu of certificates.

SD-14 Samples

Aluminum Windows; GA1.

Manufacturer's standard color samples of the specified finishes.

1.4 QUALIFICATION

Window manufacturer shall specialize in designing and manufacturing the

type of aluminum windows specified in this section, and shall have a minimum of 10 years of documented successful experience. Manufacturer shall have the facilities capable of meeting contract requirements, single-source responsibility and warranty.

1.5 MOCK-UPS

Before fabrication, full-size mock-up of one window unit (typical guest room) complete with glass and AAMA certification label will be required for review of window construction and quality of hardware operation.

1.6 DELIVERY AND STORAGE

Aluminum windows shall be delivered to project site and stored in accordance with manufacturer's recommendations. Damaged windows shall be replaced with new windows.

1.7 WARRANTY

Manufacturer's standard performance guarantees or warranties that extend beyond a 1 year period shall be provided.

PART 2 PRODUCTS

2.1 ALUMINUM WINDOW TYPES

Aluminum windows shall be of the fixed and sliding, double-glazed, thermal-break types with minimum frame section depth not less than 100 mm (4 inches). Windows shall be designed for glazing from inside the building. Aluminum windows shall consist of complete units including sash, glass, frame, head and sill sub-frame, weatherstripping, head and jamb extensions, and hardware. Windows shall conform to AAMA AAMA/NWWDA 101 I.S.2. Operable windows shall permit cleaning the outside glass from inside the building.

2.1.1 Fixed Windows

Aluminum fixed (F) windows shall conform to AAMA AAMA/NWWDA 101 I.S.2 F-AW40 type, non-operable glazed frame, complete with provisions for reglazing in the field.

2.1.2 Horizontal-Sliding Windows

Aluminum horizontal (HS) sliding windows shall conform to AAMA AAMA/NWWDA 101 I.S.2 HS-AW40 type consisting of sliding sash and fixed lite with stainless steel 25 mm (1 inch) ball-bearing rollers with stainless steel track and limit stop. Windows shall be provided with jamb and cast bronze sweep lock at meeting rails to secure the sash in the closed position.

2.2 WEATHERSTRIPPING

Weatherstripping for ventilating sections shall be of type designed to meet water penetration and air infiltration requirements specified in this section in accordance with AAMA AAMA/NWWDA 101 I.S.2, and shall be manufactured of material compatible with aluminum and resistant to weather. Weatherstrips shall be factory-applied and easily replaced in the field. Neoprene or polyvinylchloride weatherstripping are not acceptable where exposed to direct sunlight.

2.3 INSECT SCREENS

Insect screens shall be aluminum window manufacturer's standard design, and shall be provided where scheduled on drawings. Insect screens shall be fabricated of extruded tubular-shaped aluminum frames conforming to SMA ANSI/SMA 1004 and 18 x 16 aluminum mesh screening conforming with ISWA IWS 089, Type III. Screen mesh to be aluminum color.

2.4 ACCESSORIES

2.4.1 Fasteners

Fastening devices shall be window manufacturer's standard design made from aluminum, stainless steel, cadmium-plated steel, nickel/chrome-plated steel in compliance with AAMA AAMA/NWWDA 101 I.S.2. Self-tapping sheet metal screws will not be acceptable for material thicker than 1/16 inch.

2.4.2 Hardware

Hardware shall be as specified for each window type and shall be fabricated of aluminum, nonmagnetic stainless steel, or corrosion-resistant metal compatible with aluminum and of sufficient strength to perform the required function. Hardware shall be in accordance with requirements established by AAMA AAMA/NWWDA 101 I.S.2.

2.4.3 Window Anchors

Anchoring devices for installing windows shall be made of aluminum, cadmium-plated steel, stainless steel, or zinc-plated steel conforming to AAMA AAMA/NWWDA 101 I.S.2.

2.4.4 Sub Frames and Trim

Sub frames and trim shall be extruded aluminum of shapes and sizes as indcated on drawings.

2.5 GLASS AND GLAZING

Glass and glazing shall be factory installed. Glass type shall be Low E Sound Control Insulating Glass as specified in Section 08810 GLASS AND GLAZING. Units shall be complete with glass and glazing provisions to meet AAMA AAMA/NWWDA 101 I.S.2.

2.6 FINISH

2.6.1 Anodized Aluminum Finish

Exposed surfaces of aluminum windows shall be finished with anodic coating conforming to AA DAF-45: Architectural Class I, AA-M10-C22-A41, clear anodic coating, or thicker, 215-R1 Natural Color. Finish shall be free of scratches and other blemishes.

2.6.2 Not Used
2.6.3 Not Used
2.6.4 Not Used

Color shall be in accordance with Section 09915 COLOR SCHEDULE.

PART 3 EXECUTION

3.1 INSTALLATION

Aluminum windows shall be installed in accordance with approved shop drawings and manufacturer's published instructions. Aluminum surfaces in contact with masonry, concrete, wood and dissimilar metals other than stainless steel, zinc, cadmium or small areas of white bronze, shall be protected from direct contact using protective materials recommended by AAMA AAMA/NWWDA 101 I.S.2. The completed window installation shall be watertight in accordance with Section 07900 JOINT SEALING. Glass and glazing shall be installed in accordance with requirements of this section and Section 08810 GLASS AND GLAZING.

3.2 ADJUSTMENTS AND CLEANING

3.2.1 Hardware Adjustments

Final operating adjustments shall be made after glazing work is complete. Operating sash or ventilators shall operate smoothly and shall be weathertight when in locked position.

3.2.2 Cleaning

Aluminum window finish and glass shall be cleaned on exterior and interior sides in accordance with window manufacturer's recommendations. Alkaline or abrasive agents shall not be used. Precautions shall be taken to avoid scratching or marring window finish and glass surfaces.

-- End of Section --

SECTION TABLE OF CONTENTS

DIVISION 08 - DOORS & WINDOWS

SECTION 08700

BUILDERS' HARDWARE

03/96

PART 1 GENERAL

1.1 REFERENCES
1.2 SUBMITTALS
1.3 PREDELIVERY CONFERENCE
1.4 DELIVERY, STORAGE, AND HANDLING
1.5 SPECIAL TOOLS
1.6 WARRANTY
1.7 OPERATION AND MAINTENANCE MANUALS

PART 2 PRODUCTS

2.1 GENERAL HARDWARE REQUIREMENTS
2.2 TEMPLATES
2.3 HINGES
2.3.1 Hinges for Reverse Bevel Doors with Locks
2.3.2 Contractor's Option
2.4 LOCKS AND LATCHES
2.4.1 Mortise Lock and Latchsets
2.4.2 Not Used
2.4.3 Not Used
2.4.4 Auxiliary Locks and Associated Products
2.4.5 Lock Cylinders
2.4.6 Not Used
2.4.7 Not Used
2.4.8 Not Used
2.4.9 Lock Trim
2.4.10 Not Used
2.4.11 Electronic Locks (Self-Contained)
2.4.11.1 Mortise Electronic Locks
2.4.11.2 Trim
2.4.11.3 Finishes
2.4.11.4 Keycards
2.4.11.5 Electronic Circuit Assembly
2.4.11.6 Computer System
2.5 EXIT DEVICES AND EXIT DEVICE ACCESSORIES
2.5.1 Exit Devices and Auxiliary Items
2.5.2 Door Coordinator
2.5.3 Not Used
2.5.4 Not Used
2.5.5 Automatic Flush Bolts
2.6 KEYING
2.7 DOOR CLOSING DEVICES
2.7.1 Surface Type Closers
2.8 DOOR CONTROLS - OVERHEAD HOLDERS
2.9 SMOKE DETECTORS AND ELECTRO-MAGNETIC HOLDERS

2.10 POWER ASSIST AND LOW ENERGY POWER OPERATORS
2.11 ARCHITECTURAL DOOR TRIM
2.11.1 Door Protection Plates
2.11.1.1 Not Used
2.11.1.2 Kick Plates
2.11.2 Not Used
2.11.3 Not Used
2.11.4 Door Pulls and Push/Pull Units
2.11.5 Combination Push and Pull Bars
2.11.6 Manual Security Door Guard
2.11.7 Door Viewer
2.11.8 Roller Latch
2.12 AUXILIARY HARDWARE
2.13 MISCELLANEOUS
2.13.1 Not Used
2.13.2 Metal Thresholds
2.13.3 Rain Drips
2.13.4 Aluminum Housed Type Weatherseals
2.13.5 Gasketing
2.13.6 Key Control Storage System
2.13.7 Door Stops
2.14 FASTENINGS
2.15 FINISHES
2.16 HARDWARE FOR FIRE DOORS

PART 3 EXECUTION

3.1 APPLICATION
3.1.1 Hardware for Fire Doors and Smoke-Control Door Assemblies
3.1.2 Door-Closing Devices
3.1.3 Key Control Storage Systems
3.1.4 Kick Plates
3.1.5 Auxiliary Hardware
3.1.6 Thresholds
3.1.7 Rain Drips
3.1.8 Weatherseals
3.1.9 Gasketing
3.2 OPERATIONAL TESTS
3.3 FIELD QUALITY CONTROL
3.4 HARDWARE SETS

-- End of Section Table of Contents --

SECTION 08700

BUILDERS' HARDWARE
03/96

PART 1 GENERAL

1.1 REFERENCES

The publications listed below form a part of this specification to the extent referenced. The publications are referred to in the text by basic designation only.

AMERICAN SOCIETY FOR TESTING AND MATERIALS (ASTM)

ASTM E 283	(1991) Determining the Rate of Air Leakage Through Exterior Windows, Curtain Walls and Doors Under Specified Pressure Differences Across the Specimen

BUILDERS HARDWARE MANUFACTURERS ASSOCIATION (BHMA)

BHMA-01	(Effective thru Jun 1998) Directory of Certified Locks & Latches
BHMA-02	(Effective thru Jul 1997) Directory of Certified Door Closers
BHMA-03	(Effective thru Jul 1997) Directory of Certified Exit Devices
BHMA ANSI/BHMA A156.1	(1997) Butts and Hinges
BHMA ANSI/BHMA A156.2	(1996) Bored and Preassembled Locks and Latches
BHMA ANSI/BHMA A156.3	(1994) Exit Devices
BHMA ANSI/BHMA A156.4	(1992) Door Controls - Closers
BHMA ANSI/BHMA A156.5	(1992) Auxiliary Locks & Associated Products
BHMA ANSI/BHMA A156.6	(1994) Architectural Door Trim
BHMA ANSI/BHMA A156.7	(1988) Template Hinge Dimensions
BHMA ANSI/BHMA A156.8	(1994) Door Controls - Overhead Stops and Holders
BHMA ANSI/BHMA A156.13	(1994) Mortise Locks & Latches
BHMA ANSI/BHMA A156.15	(1995) Closer Holder Release Devices

BHMA ANSI/BHMA A156.16	(1989) Auxiliary Hardware
BHMA ANSI/BHMA A156.18	(1993) Materials and Finishes
BHMA ANSI/BHMA A156.19	(1990) Power Assist and Low Energy Power Operated Doors
BHMA ANSI/BHMA A156.21	(1996) Thresholds

DOOR AND HARDWARE INSTITUTE (DHI)

DHI-03	(1989) Keying Systems and Nomenclature
DHI-04	(1976) Recommended Locations for Builders' Hardware for Custom Steel Doors and Frames
DHI 05	(1990) Recommended Locations for Architectural Hardware for Standard Steel Doors and Frames
DHI-A115.1G	(1994) Installation Guide for Doors and Hardware
DHI A115-W	(Varies) Wood Door Hardware Standards (Incl A115-W1 thru A115-W9)

NATIONAL FIRE PROTECTION ASSOCIATION (NFPA)

NFPA 80	(1995) Fire Doors and Fire Windows
NFPA 101	(1997; Errata 97-1) Life Safety Code
NFPA 105	(1993) Installation of Smoke-Control Door Assemblies

1.2 SUBMITTALS

Government approval is required for submittals with a "GA" designation; submittals having an "FIO" designation are for information only. The following shall be submitted in accordance with Section 01330 SUBMITTAL PROCEDURES:

SD-01 Data

Hardware and Accessories; FIO.

Manufacturer's descriptive data, technical literature, catalog cuts, and installation instructions. Spare parts data for locksets, exit devices, closers, electronic locks, and electro-magnetic closer holder release devices, after approval of the detail drawings, and not later than 3 months prior to the date of beneficial occupancy. The data shall include a complete list of parts and supplies, with current unit prices and source of supply.

SD-04 Drawings

Hardware Devices; GA.

Detail drawings for hardware devices for computerized keying systems,

magnetic cards, and other electrical hardware devices showing complete wiring and schematic diagrams and other details required to demonstrate proper function of units.

SD-07 Schedules

Hardware Schedule; GA1.

Hardware schedule listing all items to be furnished. The schedule shall include for each item: the quantities; manufacturer's name and catalog numbers; the ANSI number specified, sizes; detail information or catalog cuts; finishes; door and frame size and materials; location and hardware set identification cross-references to drawings; corresponding reference standard type number or function number from manufacturer's catalog if not covered by ANSI or BHMA; and list of abbreviations and template numbers.

Keying Schedule; GA.

Keying schedule developed in accordance with DHI-03, after the keying meeting with the user.

SD-13 Certificates

Hardware and Accessories; FIO.

The hardware manufacturer's certificates of compliance stating that the supplied material or hardware item meets specified requirements. Each certificate shall be signed by an official authorized to certify in behalf of the product manufacturer and shall identify quantity and date or dates of shipment or delivery to which the certificates apply. A statement that the proposed hardware items appear in BHMA-01, BHMA-02 and BHMA-03 directories of certified products may be submitted in lieu of certificates.

1.3 PREDELIVERY CONFERENCE

Upon approval of the Hardware Schedule, the construction Contractor shall arrange a conference with the hardware supplier, Contracting Officer and the using agency to determine keying system requirements. Location of the key control storage system, set-up and key identification labeling will also be determined.

1.4 DELIVERY, STORAGE, AND HANDLING

Hardware shall be delivered to the project site in the manufacturer's original packages. Each article of hardware shall be individually packaged in the manufacturer's standard commercial carton or container, and shall be properly marked or labeled to be readily identifiable with the approved hardware schedule. Each change key shall be tagged or otherwise identified with the door for which its cylinder is intended. Where double cylinder functions are used or where it is not obvious which is the key side of a door, appropriate instructions shall be included with the lock and on the hardware schedule. Manufacturer's printed installation instructions, fasteners, and special tools shall be included in each package.

1.5 SPECIAL TOOLS

Special tools, such as those supplied by the manufacturer, unique wrenches, and dogging keys, shall be provided as required to adjust hardware items.

1.6 WARRANTY

Manufacturer's standard performance guarantees or warranties that extend beyond a one year period shall be provided.

1.7 OPERATION AND MAINTENANCE MANUALS

Six complete copies of maintenance instructions listing routine maintenance procedures, possible breakdowns and repairs, and troubleshooting guides shall be provided. The instructions for electric locks, electric strikes, electro-magnetic closer holder release devices, and electric exit devices shall include simplified diagrams as installed.

PART 2 PRODUCTS

2.1 GENERAL HARDWARE REQUIREMENTS

Hardware shall conform to the requirements specified herein and the HARDWARE SETS listing at the end of this section. Hardware set numbers correspond to the set numbers shown on the drawings.

2.2 TEMPLATES

Requirements for hardware to be mounted on metal doors or metal frames shall be coordinated between hardware manufacturer and door or frame manufacturer by use of templates and other information to establish location, reinforcement required, size of holes, and similar details. Templates of hinges shall conform to BHMA ANSI/BHMA A156.7.

2.3 HINGES

Hinges shall conform to BHMA ANSI/BHMA A156.1. Hinges used on metal doors and frames shall also conform to BHMA ANSI/BHMA A156.7. Except as otherwise specified, hinge sizes shall conform to the hinge manufacturer's printed recommendations. Exterior hinges shall be stainless steel with stainless steel pin and flat button types. Interior hinges shall be steel with steel pin and flat button types. Finish shall be dull chrome.

2.3.1 Hinges for Reverse Bevel Doors with Locks

Hinges for reverse bevel doors with locks shall have pins that are made nonremovable by means such as a set screw in the barrel, or safety stud, when the door is in the closed position.

2.3.2 Contractor's Option

Hinges with antifriction bearings may be furnished in lieu of ball bearing hinges, except where prohibited for fire doors by the requirements of NFPA 80.

2.4 LOCKS AND LATCHES

To the maximum extent possible, locksets, latchsets and deadlocks, and all components thereof, including cylinders and removable cores, shall be the products of a single manufacturer. Strikes for pairs of wood doors shall be furnished with wrought boxes. Finish for locksets, latchsets and deadlocks to be BHMA 626 or 652 (US 26D).

2.4.1 Mortise Lock and Latchsets

Mortise lock, latchsets, and strikes shall be series 1000 and shall conform to BHMA ANSI/BHMA A156.13, operational Grade 1. Mortise type locks and latches for doors thick and over shall have adjustable bevel fronts or otherwise conform to the shape of the door. Mortise locks shall have armored fronts. Lock throw to be minimum 19 mm (3/4 inch).

2.4.2 Not Used

2.4.3 Not Used

2.4.4 Auxiliary Locks and Associated Products

Mortise dead locks and dead latches, rim latches, dead latches, and dead bolts, shall conform to BHMA ANSI/BHMA A156.5. Bolt and latch retraction shall be dead bolt style. Strike boxes shall be furnished with dead bolt and latch strikes for Grade 1.

2.4.5 Lock Cylinders

Lock cylinders shall comply with BHMA ANSI/BHMA A156.5. Lock cylinders shall have seven pin combinated cores with Best style cappings. Cylinders shall have key removable type cores. A grand master keying system shall be provided. Construction interchangeable cores shall be provided. Disassembly of knob or lockset shall not be required to remove core from lockset. All locksets, lockable exit devices, and padlocks shall accept same interchangeable cores.

2.4.6 Not Used

2.4.7 Not Used

2.4.8 Not Used

2.4.9 Lock Trim

Lock trim shall be cast or forged construction of commercial plain design. In addition to meeting the test requirement of BHMA ANSI/BHMA A156.2 or BHMA ANSI/BHMA A156.13, lever handles, roses, and escutcheons shall be thick, if unreinforced. If reinforced, the outer shell shall be thick and the combined thickness shall be Lever handle design shall be similar to Schlage, L Series No. 07, with curved, flat face design and ends returned to no more than from the door face.

2.4.10 Not Used

2.4.11 Electronic Locks (Self-Contained)

Notwithstanding Section 00700 CONTRACT CLAUSES FAR 52.236-5, Material and Workmanship, the Electronic Lock System shall be manufactured by TESA Entry Systems in order to be fully compatible with and interface with the existing Phase 1 & 2 Lodging facility. No other product will be acceptable. The competition Advocate authorizes sole source procurement.

2.4.11.1 Mortise Electronic Locks

Locksets shall be Tesa HT24 Series (mortise type, tamper resistant, door units). Provide Grade 1, BHMA ANSI/BHMA 156.13 series 1000, UL listed mortise locks equipped with adjustable plain, rectangular shaped armored

front, 25 mm (1 inch) throw hardened steel insert dead bolt, 19 mm (3/4 inch) deadlocking latch bolt and 70 MM (2-3/4 inch) backset. Latch bolt and dead bolt shall operate simultaneously by rotating inside lever. Locks with mechanical override lock cylinders are not acceptable.

2.4.11.2 Trim

Provide lever handles with return for all locks. Lever design to be Tesa "Jerez" lever style to match existing lever handles.

2.4.11.3 Finishes

Comply with BHMA ANSI/BHMA 156.18. Provide units of basic metal and forming method indicated using manufacturer's standard metal alloy, composition, temper and hardness, but in no case of lesser commercially recognized quality than specified. Do not furnish "optional" materials or forming method for those indicated except as otherwise specified. Provide protective coating on all exposed finishes.

2.4.11.4 Keycards

Activation of all units shall be by use of insertion of magnetic strip encoded keycards. Keycards shall resist tearing, bending, scratching and shall be water resistant. Keycards shall have no less than a 600 coersivity magnetic strip.

2.4.11.5 Electronic Circuit Assembly

Exterior housing shall be totally self-contained, tamper resistant, door mounted units. No wiring shall be permitted through the door. Exterior door assembly shall require horizontal keycard entry to eliminate foreign matter from entering or being spilled into the keycard slot.

2.4.11.6 Computer System

System shall be tied into the existing primary computer provided by the Government in the Phase One building and shall include required cabling, emergency lock power supply, manuals, keys,and lock programmer/Interrogator Probe.

2.5 EXIT DEVICES AND EXIT DEVICE ACCESSORIES

Exit devices and exit device accessories shall conform to BHMA ANSI/BHMA A156.3, Grade 1.

2.5.1 Exit Devices and Auxiliary Items

Trim shall be of wrought construction and commercial plain design with straight, beveled, or smoothly rounded sides, corners, and edges. Adjustable strikes shall be provided for rim type and vertical rod devices. Open back strikes shall be provided for pairs of doors with mortise and vertical rod devices; except open back strikes shall be used on labeled doors only where specifically provided for in the published listings. Vertical rods shall be concealed. Touch bars shall be provided with smooth finish. Provide lever trim without escutcheon plate. Trim to match lockset lever specified in 2.4.9 (Lock Trim).

2.5.2 Door Coordinator

Door coordinator with carry bar shall be Type 21 and shall be provided for each pair of doors equipped with an overlapping astragal. The coordinator may be gravity operated and shall be capable of holding the active door of a pair open until the inactive door has preceded it in the closing cycle. When used as fire exit hardware, the coordinator and carry bar shall be listed or labeled by a nationally recognized independent testing laboratory.

2.5.3 Not Used

2.5.4 Not Used

2.5.5 Automatic Flush Bolts

Automatic flush bolts shall be Type 25 in accordance with BHMA ANSI/BHMA A156.3, and shall be installed at the top and bottom of the inactive leaf of pairs of fire rated doors where specified in the hardware sets. Flush bolts shall be mortised in the strike edge of the door.

2.6 KEYING

Locks shall be keyed in sets or subsets as scheduled and shall be coordinated with existing keying system for the building. Locks shall be furnished with the manufacturer's standard construction key system. Change keys for locks shall be stamped with change number and the inscription "U.S. Property - Do Not Duplicate." Keys shall be supplied as follows:

Locks:	3 change keys each lock.
Master keyed sets:	3 keys each set.
Grand master keys:	3 total.
Control keys:	3 total.

The keys shall be furnished to the Contracting Officer arranged for key control system storage in sets or subsets as scheduled.

2.7 DOOR CLOSING DEVICES

Door closing devices shall conform to BHMA ANSI/BHMA A156.4, Grade 1. Closing devices shall be products of one manufacturer for each type specified. The opening resistance of closing devices shall not exceed applied at the latch stile or exceed where low opening resistance is scheduled.

2.7.1 Surface Type Closers

Surface type closers shall be Grade 1, Series C02000 Full Cover with options PT-4H, Size 1 or 2 through Size 6, and PT-4D with back check position valve. Closers to have 38 mm (1.5 inch) piston, minimum 15 mm (5/8 inch) spindle and forged steel arm. Except as otherwise specified, sizes shall conform to the manufacturer's published recommendations. Closers for outswinging exterior doors shall have parallel arms or shall be top jamb mounted. Closers for doors close to a wall shall be of narrow projection so as not to strike the wall at the 90-degree open position. Where indicated in hardware sets, provide integral stop with closer.

2.8 DOOR CONTROLS - OVERHEAD HOLDERS

Door controls - overhead holders shall conform to BHMA ANSI/BHMA A156.8.

2.9 SMOKE DETECTORS AND ELECTRO-MAGNETIC HOLDERS

Electro-magnetic door holders shall conform to BHMA ANSI/BHMA A156.15 and shall release the door upon activation of the building fire alarm system or interruption of electric power. Door holder shall be of appropriate overall depth to insure door is parallel to adjacent wall when in the 90 degree open position, parallel to the wall. Verify actual distance required prior to ordering.

2.10 POWER ASSIST AND LOW ENERGY POWER OPERATORS

Power assist and low energy power operators shall conform to BHMA ANSI/BHMA A156.19 and shall be electrically operated. Operator pushbutton shall be of round face design, wall mounted, and shall be located as shown on drawings. One operator shall be provided for each designated door.

2.11 ARCHITECTURAL DOOR TRIM

Architectural door trim shall conform to BHMA ANSI/BHMA A156.6.

2.11.1 Door Protection Plates

2.11.1.1 Not Used

2.11.1.2 Kick Plates

Kick plates shall be Type J102 stainless steel. Width of plates shall be (2 inches) less than door width for single doors and (1 inch) less for pairs of doors. Height shall be (12 inches).

2.11.2 Not Used

2.11.3 Not Used

2.11.4 Door Pulls and Push/Pull Units

2.11.5 Combination Push and Pull Bars

Push and pull bars shall be 25 mm (1 inch) tubular steel with pull handle returns at 200 mm (8 inch centers), in polished stainless, in standard length, similar to Hiawatha 5357B x 1081 LBP.

2.11.6 Manual Security Door Guard

Door guard to be equivalent to Ives No. 482, two piece solid bar door guard with auxiliary door edge guard in US26D finish.

2.11.7 Door Viewer

Door viewer to be 160 degree, one way cylindrical door viewer in US26D finish.

2.11.8 Roller Latch

Roller latch shall be a two piece unit of forged bronze with rubber roller and adjustable projection, similar to Glynn-Johnson Model GJ-30.

2.12 AUXILIARY HARDWARE

Auxiliary hardware, consisting of door holders, door stops, and roller

latches, shall conform to BHMA ANSI/BHMA A156.16. Lever extension flush bolts shall be Type L14081. Dust-proof strikes shall be Type L04011 for doors that are not fire rated. Other auxiliary hardware shall conform to BHMA ANSI/BHMA A156.16.

2.13 MISCELLANEOUS

2.13.1 Not Used

2.13.2 Metal Thresholds

Thresholds shall conform to BHMA ANSI/BHMA A156.21. Thresholds for exterior doors shall be extruded aluminum of the type indicated and shall provide proper clearance and an effective seal with specified weather stripping. Where required, thresholds shall be modified to receive projecting bolts of flush bolts. Thresholds for doors accessible to the handicapped shall be beveled with slopes not exceeding 1:2 and with heights not exceeding (1/2 inch). Where thresholds abut ceramic tile finishes, a half saddle threshold design shall be provided. Air leakage rate of weatherstripping shall not exceed (0.5 cubic feet per minute) per lineal foot of crack when tested in accordance with ASTM E 283 at standard test conditions.

2.13.3 Rain Drips

Extruded aluminum, not less than (0.07 inch) thick. Overhead rain drips shall be approximately (1-1/2 inches) high by (2-1/2 inches) projection and shall extend (2 inches) on either side of the door opening width.

2.13.4 Aluminum Housed Type Weatherseals

Weatherseals of the type indicated shall consist of extruded aluminum retainers not less than (0.07 inch) wall thickness with vinyl, neoprene, silicone rubber, polyurethane or vinyl brush inserts. Aluminum shall be clear (natural) anodized. Weatherseal material shall be of an industrial/commercial grade. Seals shall remain functional through all weather and temperature conditions. Air leakage rate of weatherstripping shall not exceed (0.5 cubic feet per minute) per lineal foot of crack when tested in accordance with ASTM E 283 at standard test conditions.

2.13.5 Gasketing

Gasketing shall be a compression type seal, silicon based, self-adhesive product for use on steel door frames with wood or steel doors for 20-minute, 45 minute C-label, 1-hour B-label, and 1-1/2 hour B-label. Color shall be bronze. Air leakage rate of weatherstripping shall not exceed (0.5 cubic feet per minute) per lineal foot of crack when tested in accordance with ASTM E 283 at standard test conditions.

2.13.6 Key Control Storage System

Key control storage system shall conform to BHMA ANSI/BHMA A156.5, and shall be properly labeled for key identification. Set up, identification labeling and location of the key control storage shall be as directed at the Predelivery Conference.

2.13.7 Door Stops

Door stops are to be wall mounted wherever feasible, and are to be 64mm (2

1/2 inch) diameter convex style with concealed mounting. All wall stops shall conform to BHMA ANSI/BHMA A156.16 and are to be in US26D finish.

2.14 FASTENINGS

Fastenings of proper type, size, quantity, and finish shall be supplied with each article of hardware. Machine screws and expansion shields shall be used for attaching hardware to concrete or masonry. Fastenings exposed to the weather in the finished work shall be of brass, bronze, or stainless steel. Sex bolts, through bolts, or machine screws and grommet nuts, where used on reverse-bevel exterior doors equipped with half-surface or full-surface hinges, shall employ one-way screws or other approved tamperproof screws. Screws for the jamb leaf of half-mortise and full-surface hinges attached to structural steel frames shall be one-way or other approved tamperproof type.

2.15 FINISHES

Unless otherwise specified, finishes shall conform to those identified in BHMA ANSI/BHMA A156.18. Where painting of primed surfaces is required, painting is specified in Section 09900 PAINTING, GENERAL.

2.16 HARDWARE FOR FIRE DOORS

Hardware for fire doors shall conform to the requirements of NFPA 80and NFPA 101.

PART 3 EXECUTION

3.1 APPLICATION

Hardware shall be located in accordance with DHI-04 and DHI 05, except that deadlocks shall be mounted above finish floor. When approved, slight variations in locations or dimensions will be permitted. Application shall be in accordance with DHI-A115.1G or DHI A115-W. Door control devices for exterior doors such as closers and holders, shall be attached to doors with thru bolts and nuts or sex bolts. Alternate fastening methods may be approved by the Contracting Officer when manufacturers' documentation is submitted to verify that the fastening devices and door reinforcements are adequate to resist wind induced stresses. Electric hardware items and access control devices shall be installed in accordance with manufacturer's printed installation procedures.

3.1.1 Hardware for Fire Doors and Smoke-Control Door Assemblies

Hardware for fire doors shall be installed in accordance with the requirements of NFPA 80. Exit devices installed on fire doors shall have a visible label bearing the marking "Fire Exit Hardware". Other hardware installed on fire doors, such as locksets, closers, and hinges shall have a visible label or stamp indicating that the hardware items have been approved by an approved testing agency for installation on fire-rated doors. Hardware for smoke-control door assemblies shall be installed in accordance with NFPA 105.

3.1.2 Door-Closing Devices

Door-closing devices shall be installed and adjusted in accordance with the templates and printed instructions supplied by the manufacturer of the devices. Insofar as practicable, doors opening to or from halls and

corridors shall have the closer mounted on the room side of the door.

3.1.3 Key Control Storage Systems

Key control storage system shall be furnished to the Contracting Officer.

3.1.4 Kick Plates

Kick plates shall be installed on the push side of single-acting doors.

3.1.5 Auxiliary Hardware

Lever extension flush bolts shall be installed at the top and bottom of the inactive leaf of pairs of doors. The bottom bolt shall operate into a dust-proof floor strike or threshold.

3.1.6 Thresholds

Thresholds shall be secured with a minimum of three fasteners per single door width and six fasteners per double door width with a maximum spacing of 12 inches. Exterior thresholds shall be installed in a bed of sealant with expansion anchors and stainless steel screws, except that bronze or anodized bronze thresholds shall be installed with expansion anchors with brass screws. Minimum screw size shall be No. 10 length, dependent on job conditions, with a minimum of 3/4 inchthread engagement into the floor or anchoring device used.

3.1.7 Rain Drips

Overhead rain drips shall align with bottom edge of door frame rabbet. Drips shall be set in sealant and fastened with stainless steel screws.

3.1.8 Weatherseals

Weatherseals shall be located as indicated, snug to door face and fastened in place with color matched metal screws after door and frames have been finish painted. Screw spacing shall be as recommended by manufacturer.

3.1.9 Gasketing

Gasketing shall be installed at the inside edge of the hinge and head and latch sides of door frame. Frames shall be toleranced for a 1/8 inch clearance between door and frame. Frames shall be treated with tape primer prior to installation.

3.2 OPERATIONAL TESTS

Prior to acceptance of any electrical hardware system, an operational test shall be performed to determine if devices are operating as intended by the specifications. Wiring shall be tested for correct voltage, current carrying capacity, and proper grounding. Stray voltages in lock wiring shall be eliminated to prevent locking devices from releasing in critical situations.

3.3 FIELD QUALITY CONTROL

Supplier shall inspect the completed installation and certify that the hardware has been furnished and installed in accordance with the manufacturers' instructions [and as specified]. The inspection report

shall identify any malfunctioning items and recommend adjustment or replacement as appropriate.

3.4 HARDWARE SETS

HW-1	1-1/2 pr.	Hinges, A8112
	1 ea.	Lockset, F05 (Classroom Function)-Grade 1
	1 ea.	Closer, C02021
	1 ea.	Stop, L02101
	1 ea.	Set Smoke Gasketing
HW-1NR	Not Used	
HW-2	1-1/2 pr.	Hinges, A8112
	1 ea.	Lockset, F14 (Storage Function)-Grade 1
	1 ea.	Closer, C02021
	1 ea.	Stop, L02101
	1 ea.	Set Smoke Gasketing
	1 ea.	Kickplate
HW-2NR	Not Used	
HW-3	1-1/2 pr.	Hinges, A8112
	1 ea.	Lockset, F01 (Passage Function) -Grade 1
	1 ea.	Closer, C02021
	1 ea.	Stop, L02101
	1 ea.	Set Smoke Gasketing
HW-3NR	1-1/2 pr.	Hinges, A8133
	1 ea.	Lockset, F01 -Grade 1
	1 ea.	Stop, L02101
HW-4	Not Used	
HW-5	1-1/2 pr.	Hinges, A8112
	1 ea.	Electronic Lockset, F15, -Grade 1
	1 ea.	Closer, C02021
	1 ea.	Stop, L02101
	1 ea.	Set Smoke Gasketing
	1 ea.	Door Viewer
	1 ea.	Security Lock
HW-6	1-1/2 pr.	Hinges, A8133
	1 ea.	Lockset, F02(Privacy Function) -Grade 1
	1 ea.	Stop, L02101

HW-7 All hardware shall be furnished by door supplier except for 1 or 2 cylinders and electronic locksets where specified in Section 08120. Verify quantity and type with aluminum door supplier.

HW-8	1-1/2 pr.	Hinges, A5111
	1 ea.	Lockset, F04 (Entry Function)-Grade 1
	1 ea.	Closer / Stop
	1 ea.	Weatherstripping, L31371
	1 ea.	Sweep Strip
	1 ea.	Threshold
	1 ea.	Rain Drip
HW-9	3 pr.	Hinges, A5111

	1 ea.	Lockset, F04 -Grade 1
	2 ea.	Closer / Stops
	1 ea.	Lever flushbolt (on inactive leaf)
	1 ea.	Dustproof strike (on inactive leaf)
	2 ea	Weatherstripping
	1 ea.	Astragal (on active leaf)
	2 ea.	Sweep Strip
	1 ea.	Threshold
	2 ea.	Rain Drip
HW-10	3 pr.	Hinges, A8112
	2 ea.	Roller Latches
	2 ea.	150mm (6") Wire Pulls (See Section 06200 for for description)
HW-11	3 pr.	Hinges, A8111
	2 ea.	Exit Devices, F23 - Grade 1, top rod only
	2 ea.	Closer
	2 ea.	Automatic Hold-Open Devices
	1 ea.	Set Smoke Gasketing

-- End of Section --

SECTION TABLE OF CONTENTS

DIVISION 08 - DOORS & WINDOWS

SECTION 08810

GLASS AND GLAZING

05/97

PART 1 GENERAL

1.1 REFERENCES
1.2 SUBMITTALS
1.3 SYSTEM DESCRIPTION
1.4 DELIVERY, STORAGE AND HANDLING
1.5 PROJECT/SITE CONDITIONS
1.6 WARRANTY
1.6.1 Insulating Glass

PART 2 PRODUCTS

2.1 FLOAT GLASS
2.1.1 Annealed Glass
2.2 Not Used
2.3 INSULATING GLASS
2.3.1 Not Used
2.3.2 Not Used
2.3.3 Ceramic-Frit Coated Insulating Spandrel Glass
2.3.4 Low-E Insulating Glass
2.3.5 Low-E Sound Control Insulating Glass
2.4 Not Used
2.5 HEAT-TREATED GLASS
2.5.1 Tempered Glass
2.6 N.I.C.
2.6 Not Used
2.7 FIRE/SAFETY RATED GLASS
2.8 MIRRORS
2.8.1 Glass Mirrors
2.8.2 Mirror Accessories
2.8.2.1 Mastic
2.8.2.2 Mirror Frames
2.8.2.3 Mirror Clips
2.9 GLAZING ACCESSORIES
2.9.1 Preformed Tape
2.9.2 Sealant
2.9.3 Glazing Gaskets
2.9.3.1 Fixed Glazing Gaskets
2.9.3.2 Wedge Glazing Gaskets
2.9.3.3 Aluminum Framing Glazing Gaskets
2.9.4 Putty and Glazing Compound
2.9.5 Setting and Edge Blocking

PART 3 EXECUTION

3.1 PREPARATION

3.2 INSTALLATION
3.3 CLEANING
3.4 PROTECTION

-- End of Section Table of Contents --

SECTION 08810

GLASS AND GLAZING
05/97

PART 1 GENERAL

1.1 REFERENCES

The publications listed below form a part of this specification to the extent referenced. The publications are referred to in the text by basic designation only.

AMERICAN NATIONAL STANDARDS INSTITUTE (ANSI)

ANSI Z97.1	(1984; R 1994) Safety Performance Specifications and Methods of Test for Safety Glazing Materials Used in Buildings

AMERICAN SOCIETY FOR TESTING AND MATERIALS (ASTM)

ASTM C 509	(1994) Elastomeric Cellular Preformed Gasket and Sealing Material
ASTM C 669	(1995) Glazing Compounds for Back Bedding and Face Glazing of Metal Sash
ASTM C 864	(1993) Dense Elastomeric Compression Seal Gaskets, Setting Blocks, and Spacers
ASTM C 920	(1995) Elastomeric Joint Sealants
ASTM C 1036	(1991) Flat Glass
ASTM C 1048	(1992) Heat-Treated Flat Glass - Kind HS, Kind FT Coated and Uncoated Glass
ASTM D 395	(1989; R 1994) Rubber Property - Compression Set
ASTM E 119	(1995a) Fire Tests of Building Construction and Materials
ASTM E 773	(1988) Seal Durability of Sealed Insulating Glass Units
ASTM E 774	(1992) Sealed Insulating Glass Units
ASTM E 1300	(1994) Determining the Minimum Thickness and Type of Glass Required to Resist a Specified Load

COMMERCIAL ITEM DESCRIPTION (CID)

CID A-A-378	(Basic) Putty Linseed Oil Type, (for Wood-Sash-Glazing)

GLASS ASSOCIATION OF NORTH AMERICA (GANA)

GANA-01 (1997) Glazing Manual

GANA-04 (1995) Engineering Standards Manual

NATIONAL FIRE PROTECTION ASSOCIATION (NFPA)

NFPA 80 (1995) Fire Doors and Fire Windows

1.2 SUBMITTALS

Government approval is required for submittals with a "GA" designation; submittals having an "FIO" designation are for information only. The following shall be submitted in accordance with Section 01330 SUBMITTAL PROCEDURES:

SD-01 Data

Glass; FIO.

Manufacturer's descriptive product data, handling and storage recommendations, installation instructions, and cleaning instructions.

SD-04 Drawings

Glazing Materials and Accessories; FIO.

Drawings showing complete details of the proposed setting methods, mullion details, edge blocking, size of openings, frame details, materials, and types and thickness of glass.

SD-13 Certificates

Glass; FIO.

Certificates stating that the glass meets the specified requirements. Labels or manufacturers marking affixed to the glass will be accepted in lieu of certificates.

SD-14 Samples

Glass; FIO.

Two (12 x 12 inch) samples of insulating glass and spandrel glass units.

1.3 SYSTEM DESCRIPTION

Glazing systems shall be fabricated and installed watertight and airtight to withstand thermal movement and wind loading without glass breakage, gasket failure, deterioration of glazing accessories, and defects in the work. Glazed panels shall comply with the safety standards, as indicated in accordance with ANSI Z97.1. Glazed panels shall comply with indicated wind/snow loading in accordance with ASTM E 1300.

1.4 DELIVERY, STORAGE AND HANDLING

Glazing compounds shall be delivered to the site in the manufacturer's

unopened containers. Glass shall be stored indoors in a safe, well ventilated dry location in accordance with manufacturer's instructions, and shall not be unpacked until needed for installation. Glass shall not be stored on site over 1 month.

1.5 PROJECT/SITE CONDITIONS

Glazing work shall not be started until outdoor temperature is above (40 degrees F) and rising, unless procedures recommended by glass manufacturer and approved by Contracting Officer are made to warm the glass and rabbet surfaces. Ventilation shall be provided to prevent condensation of moisture on glazing work during installation. Glazing work shall not be performed during damp or raining weather.

1.6 WARRANTY

1.6.1 Insulating Glass

Manufacturer shall warrant the insulating glass to be free of fogging or film formation on the internal glass surfaces caused by failure of the hermetic seal for a period of 10 years from Date of Substantial Completion. Warranty shall be signed by manufacturer.

PART 2 PRODUCTS

2.1 FLOAT GLASS

2.1.1 Annealed Glass

Annealed glass shall be Type I transparent flat type, Class 1 - clear , Quality q3 - glazing select, 89 percent visible light transmittance, .96 shading coefficient, conforming to ASTM C 1036.

2.2 Not Used

2.3 INSULATING GLASS

Insulating glass shall be Class A preassembled units of dual-seal construction consisting of lites of glass separated by an aluminum, steel, or stainless steel, spacer and dehydrated space conforming to ASTM E 773 and ASTM E 774. Spacer shall be roll-formed, with bent or tightly welded or keyed and sealed joints to completely seal the spacer periphery and eliminate moisture and hydrocarbon vapor transmission into airspace through the corners. Primary seal shall be compressed polyisobutylene and the secondary seal shall be a specially formulated silicone. Glass types shall be as follows:

2.3.1 Not Used

2.3.2 Not Used

2.3.3 Ceramic-Frit Coated Insulating Spandrel Glass

Insulating spandrel glass shall be heat-strengthened transparent flat type, Condition B, roller-coated with a colored ceramic frit material on the No. 3 surface, Quality q3 - glazing select, conforming to ASTM C 1048. Color shall be equal to Viracon Light Gray (V-909).

2.3.4 Low-E Insulating Glass

Interior and exterior glass panes for Low-E insulating units shall be Type I annealed flat glass, Class 1-clear with anti-reflective, high performance special low-emissivity coating on No. 2 surface (inside surface of exterior pane), Quality q3 - glazing select, conforming to ASTM C 1036. Glass performance shall achieve, R-Value (Winter Nighttime) of .29, visible light transmittance of 70 percent, and shading coefficient of .43. Overall glass unit thickness shall be 25 mm (1 inch).

2.3.5 Low-E Sound Control Insulating Glass

Interior and exterior glass panes for Low-E sound control insulating units shall each consist of two layers of Type I transparent 3 mm (1/8 inch) thick float glass, bonded together with 0.76 mm (0.030 inch) thick PVB interlayer under pressure, conforming to requirements of 16 CRF 1201 and ASTM C 1172. Glass shall be class 1- clear with anti-reflective, high performance special low-emissivity coating on No. 2 surface (inside surface of exterior pane), Quality q3 - glazing select, conforming to ASTM C1036. Glass assembly STC rating shall be 42. Glass performance shall achieve K-value of 1.6, R-value (Winter Nighttime) of .29, visible light transmittance of 70 percent, and shading coefficient of .43. Overall glass unit thickness shall be 25 mm (1 inch).

2.4 Not Used

2.5 HEAT-TREATED GLASS

Heat-treated glass shall conform to the following requirements.

2.5.1 Tempered Glass

Tempered glass shall be kind FT fully tempered transparent flat type, Class 1-clear, Condition A uncoated surface, Quality q3 - glazing select, 89 percent light transmittance, shading coefficient of .96, conforming to ASTM C 1048 and GANA-04. Color shall be clear.

2.6 N.I.C.

2.6 Not Used

2.7 FIRE/SAFETY RATED GLASS

Fire/safety rated glass shall be laminated Type I transparent flat type, Class 1-clear. Glass shall have a 20 minute rating when tested in accordance with ASTM E 119. Glass shall be permanently labeled with appropriate markings.

2.8 MIRRORS

2.8.1 Glass Mirrors

Glass for mirrors shall be Type I transparent flat type, Class 1-clear, Glazing Quality q1 thick conforming to ASTM C 1036. Glass color shall be clear. Glass shall be coated on one surface with silver coating, copper protective coating, and mirror backing paint. Silver coating shall be highly adhesive pure silver coating of a thickness which shall provide reflectivity of 83 percent or more of incident light when viewed through thick glass, and shall be free of pinholes or other defects. Copper protective coating shall be pure bright reflective copper, homogeneous

without sludge, pinholes or other defects, and shall be of proper thickness to prevent "adhesion pull" by mirror backing paint. Mirror backing paint shall consist of two coats of special scratch and abrasion-resistant paint , and shall be baked in uniform thickness to provide a protection for silver and copper coatings which will permit normal cutting and edge fabrication.

2.8.2 Mirror Accessories

2.8.2.1 Mastic

Mastic for setting mirrors shall be a polymer type mirror mastic resistant to water, shock, cracking, vibration and thermal expansion. Mastic shall be compatible with mirror backing paint, and shall be approved by mirror manufacturer.

2.8.2.2 Mirror Frames

Mirrors above vanities shall be provided with mirror frames (J-mold channels) fabricated of one-piece roll-formed Type 304 stainless steel with No. 4 brushed satin finish and concealed fasteners which will keep mirrors snug to wall. Frames shall be continuous at top and bottom of mirrors. Concealed fasteners of type to suit wall construction material shall be provided with mirror frames.

2.8.2.3 Mirror Clips

At door mounted mirrors, adjustable individual clips (in size and finish as described in 2.9.3.2) may be provided in minimum 25 mm (1 inch) length at top and bottom of mirrors. Concealed fasteners of type to suit door construction material shall be provided with clips.

2.9 GLAZING ACCESSORIES

2.9.1 Preformed Tape

Preformed tape shall be elastomeric rubber extruded into a ribbon of a width and thickness suitable for specific application. Tape shall be of type which will remain resilient, have excellent adhesion, and be chemically compatible to glass, metal, or wood.

2.9.2 Sealant

Sealant shall be elastomeric conforming to ASTM C 920, Type S or M, Grade NS, Class 12.5, Use G, of type chemically compatible with setting blocks, preformed sealing tape and sealants used in manufacturing insulating glass. Color of sealant shall be as selected from manufacturers standards.

2.9.3 Glazing Gaskets

Glazing gaskets shall be extruded with continuous integral locking projection designed to engage into metal glass holding members to provide a watertight seal during dynamic loading, building movements and thermal movements. Glazing gaskets for a single glazed opening shall be continuous one-piece units with factory-fabricated injection-molded corners free of flashing and burrs. Glazing gaskets shall be in lengths or units recommended by manufacturer to ensure against pull-back at corners. Glazing gasket profiles shall be as indicated on drawings.

2.9.3.1 Fixed Glazing Gaskets

Fixed glazing gaskets shall be closed-cell (sponge) smooth extruded compression gaskets of cured elastomeric virgin neoprene compounds conforming to ASTM C 509, Type 2, Option 1.

2.9.3.2 Wedge Glazing Gaskets

Wedge glazing gaskets shall be high-quality extrusions of cured elastomeric virgin neoprene compounds, ozone resistant, conforming to ASTM C 864, Option 1, Shore A durometer between 65 and 75.

2.9.3.3 Aluminum Framing Glazing Gaskets

Glazing gaskets for aluminum framing shall be permanent, elastic, non-shrinking, non-migrating, watertight and weathertight.

2.9.4 Putty and Glazing Compound

Glazing compound shall conform to ASTM C 669 for face-glazing metal sash. Putty shall be linseed oil type conforming to CID A-A-378for face-glazing primed wood sash. Putty and glazing compounds shall not be used with insulating glass or laminated glass.

2.9.5 Setting and Edge Blocking

Neoprene setting blocks shall be dense extruded type conforming to ASTM D 395, Method B, Shore A durometer between 70 and 90. Edge blocking shall be Shore A durometer of 50 (+ or - 5). Silicone setting blocks shall be required when blocks are in contact with silicone sealant. Profiles, lengths and locations shall be as required and recommended in writing by glass manufacturer.

PART 3 EXECUTION

3.1 PREPARATION

Openings and framing systems scheduled to receive glass shall be examined for compliance with approved shop drawings, GANA-01 and glass manufacturer's recommendations including size, squareness, offsets at corners, presence and function of weep system, face and edge clearance requirements and effective sealing between joints of glass-framing members. Detrimental materials shall be removed from glazing rabbet and glass surfaces and wiped dry with solvent. Glazing surfaces shall be dry and free of frost.

3.2 INSTALLATION

Glass and glazing work shall be performed in accordance with approved shop drawings, GANA-01, glass manufacturer's instructions and warranty requirements. Glass shall be installed with factory labels intact and removed only when instructed. Wired glass and fire/safety rated glass shall be installed in accordance with NFPA 80. Edges and corners shall not be ground, nipped or cut after leaving factory. Springing, forcing or twisting of units during installation will not be permitted.

3.3 CLEANING

Upon completion of project, outside surfaces of glass shall be washed clean and the inside surfaces of glass shall be washed and polished in accordance

with glass manufacturer's recommendations.

3.4 PROTECTION

Glass work shall be protected immediately after installation. Glazed openings shall be identified with suitable warning tapes, cloth or paper flags, attached with non-staining adhesives. Reflective glass shall be protected with a protective material to eliminate any contamination of the reflective coating. Protective material shall be placed far enough away from the coated glass to allow air to circulate to reduce heat buildup and moisture accumulation on the glass. Glass units which are broken, chipped, cracked, abraded, or otherwise damaged during construction activities shall be removed and replaced with new units.

-- End of Section --

SECTION TABLE OF CONTENTS

DIVISION 09 - FINISHES

SECTION 09250

GYPSUM WALLBOARD

06/97

PART 1 GENERAL

1.1 REFERENCES
1.2 SYSTEM DESCRIPTION
1.2.1 Fire-Rated Construction
1.3 SUBMITTALS
1.4 QUALIFICATIONS
1.5 DELIVERY, STORAGE AND HANDLING
1.6 ENVIRONMENTAL CONDITIONS

PART 2 MATERIALS

2.1 NON-LOADBEARING STUD WALLS
2.1.1 Studs
2.1.2 Runner Tracks
2.2 SUSPENDED CEILING FRAMING
2.3 GYPSUM BOARD
2.3.1 Standard Gypsum Board
2.3.2 Fire-Rated Gypsum Board
2.3.3 Water-Resistant Gypsum Board
2.3.4 Not Used
2.3.5 Not Used
2.3.6 Not Used
2.3.7 Not Used
2.3.8 Exterior Sheathing Board
2.4 TRIM, MOLDINGS, AND ACCESSORIES
2.4.1 Taping and Embedding Compound
2.4.2 Finishing or Topping Compound
2.4.3 All-Purpose Compound
2.4.4 Joint Tape
2.4.5 Trim, Control Joints, Beads, Stops and Nosings
2.5 FASTENINGS AND ADHESIVES
2.5.1 Nails
2.5.2 Screws
2.5.3 Adhesives
2.5.4 Hangers
2.5.5 Wire and Clip Type Fastenings
2.5.5.1 Tie Wire
2.5.5.2 Clips
2.6 CEMENTITIOUS BACKER UNITS
2.7 COLUMN COVERS
2.8 CEILING SPRAY TEXTURE

PART 3 EXECUTION

3.1 INTERIOR WALL FRAMING

3.1.1 Wall Openings
3.1.2 Wall Control Joints
3.1.3 Blocking
3.2 Not Used
3.3 SUSPENDED CEILING FRAMING
3.3.1 Hangers
3.3.2 Main Runners
3.3.3 Furring Channels
3.3.4 Ceiling Openings
3.3.5 Light Fixtures and Air Diffusers
3.3.6 Control Joints
3.3.6.1 Interior Ceilings With Perimeter Relief
3.3.6.2 Interior Ceilings Without Perimeter Relief
3.4 APPLICATION OF GYPSUM BOARD
3.4.1 Two-Ply Gypsum Board
3.4.2 Not Used
3.4.3 Water-Resistant Gypsum Board
3.4.4 Adhesively-Applied Gypsum Board
3.4.5 Exterior Sheathing
3.5 TRIM, MOLDINGS, AND ACCESSORIES INSTALLATION
3.6 TAPING AND FINISHING
3.7 APPLICATION OF CEMENTITIOUS BACKER UNITS
3.8 FIRE-RESISTANT ASSEMBLIES
3.9 PATCHING
3.10 COLUMN COVERS
3.11 CEILING SPRAY TEXTURE

-- End of Section Table of Contents --

SECTION 09250

GYPSUM WALLBOARD
06/97

PART 1 GENERAL

1.1 REFERENCES

The publications listed below form a part of this specification to the extent referenced. The publications are referred to in the text by basic designation only.

AMERICAN NATIONAL STANDARDS INSTITUTE (ANSI)

ANSI A108.11	(1992) Interior Installation of Cementitious Backup Units
ANSI A118.9	(1992) Test Methods and Specifications for Cementitious Backer Units

AMERICAN SOCIETY FOR TESTING AND MATERIALS (ASTM)

ASTM A 580/A 580M	(1998) Stainless Steel Wire
ASTM A 853	(1993) Steel Wire, Carbon, for General Use
ASTM C 36	(1997) Gypsum Wallboard
ASTM C 79/C 79M	(1997) Treated Core and Nontreated Core Gypsum Sheathing Board
ASTM C 475	(1994) Joint Compound and Joint Tape for Finishing Gypsum Board
ASTM C 514	(1996) Nails for the Application of Gypsum Board
ASTM C 557	(1993a) Adhesive for Fastening Gypsum Wallboard to Wood Framing
ASTM C 630/C 630M	(1996a) Water-Resistant Gypsum Backing Board
ASTM C 645	(1998) Nonstructural Steel Framing Members
ASTM C 754	(1997) Installation of Steel Framing Members to Receive Screw-Attached Gypsum Panel Products
ASTM C 840	(1998) Application and Finishing of Gypsum Board
ASTM C 1002	(1998) Steel Drill Screws for the Application of Gypsum Board or Metal Plaster Bases

ASTM C 1047	(1998) Accessories for Gypsum Wallboard and Gypsum Veneer Base

GYPSUM ASSOCIATION (GA)

GA 216	(1996) Application and Finishing of Gypsum Board
GA 600	(1997) Fire Resistance Design Manual

UNDERWRITERS LABORATORIES (UL)

UL Fire Resist Dir	(1998) Fire Resistance Directory

1.2 SYSTEM DESCRIPTION

1.2.1 Fire-Rated Construction

Joints of fire-rated gypsum board enclosures shall be closed and sealed in accordance with UL test requirements or GA requirements, and as required to meet pressurization requirements. Penetrations through rated partitions and ceilings shall be sealed tight in accordance with tested systems. Fire ratings shall be as indicated.

1.3 SUBMITTALS

Government approval is required for submittals with a "GA" designation; submittals having an "FIO" designation are for information only. The following shall be submitted in accordance with Section 01330 SUBMITTAL PROCEDURES:

SD-13 Certificates

Gypsum Wallboard; FIO. Water-Resistant Gypsum Board; FIO. Steel Framing; FIO. Fire-Rated Gypsum Board; FIO; Cementitious Backer Units; FIO.

Certificates stating that the steel framing and gypsum wallboard meet the specified requirements.

SD-14 Samples

Mock-Up; GA. A sample wall area within the project with finished gypsum board, approximately 2438 x 3657mm (8 by 12 feet)in area, containing typical joint finishing, corner bead application and finished surfaces, to establish level of quality finish to be achieved for all gypsum board wall surfaces.

1.4 QUALIFICATIONS

Manufacturer shall specialize in manufacturing the types of material specified and shall have a minimum of 5 years of documented successful experience. Installer shall specialize in the type of gypsum board work required and shall have a minimum of 3 years of documented successful experience.

1.5 DELIVERY, STORAGE AND HANDLING

Materials shall be delivered in original containers bearing the name of

manufacturer, contents, and brand name. Materials shall be stored off the ground in a weathertight structure for protection. Gypsum boards shall be stacked flat, off floor and supported to prevent sagging and warpage. Adhesives and joint materials shall be stored in accordance with manufacturer's printed instructions. Damaged or deteriorated materials shall be removed from jobsite.

1.6 ENVIRONMENTAL CONDITIONS

Environmental conditions for application and finishing of gypsum board shall be in accordance with ASTM C 840. During the application of gypsum board without adhesive, a room temperature of not less than (40 degrees F) shall be maintained. During the application of gypsum board with adhesive, a room temperature of not less than (50 degrees F) shall be maintained for 48 hours prior to application and continuously afterwards until completely dry. Building spaces shall be ventilated to remove water not required for drying joint treatment materials. Drafts shall be avoided during dry hot weather to prevent materials from drying too rapidly.

PART 2 MATERIALS

2.1 NON-LOADBEARING STUD WALLS

2.1.1 Studs

Studs for non-loadbearing walls shall conform to ASTM C 645. Studs shall be C-shaped, roll formed steel with minimum uncoated design thickness of made from G40 hot-dip galvanized coated sheet.

2.1.2 Runner Tracks

Floor and ceiling runner tracks shall conform to ASTM C 645. Tracks shall be prefabricated, U-shaped with minimum (1 inch) flanges, unpunched web, thickness to match studs, made from G40 hot-dip galvanized coated sheet.

2.2 SUSPENDED CEILING FRAMING

Suspended ceiling framing system shall have the capability to support the finished ceiling, light fixtures, air diffusers, and accessories, as shown. The suspension system shall have a maximum deflection of L/240. Carrying channels shall be formed from minimum (0.0548 in) thick cold-rolled steel; (1-1/2 x 3/4 inch). Furring members shall be formed from cold-rolled steel ; (7/8 x 2-9/16 inch). Carrying channels and furring members shall be made from hot-dip galvanized coated sheet.

2.3 GYPSUM BOARD

Gypsum board shall have square-cut ends, tapered or beveled edges and shall be maximum possible length. Gypsum board thickness shall be as shown.

2.3.1 Standard Gypsum Board

Regular gypsum board shall conform to ASTM C 36, and shall be (48 inches) wide.

2.3.2 Fire-Rated Gypsum Board

Fire-rated gypsum board shall conform to ASTM C 36, and shall be Type X or Type C as required, (48 inches) wide.

2.3.3 Water-Resistant Gypsum Board

Water-resistant gypsum board shall conform to ASTM C 630/C 630M, regular , with water-resistant paper faces, paintable surfaces, and shall be (48 inch) width and maximum permissible length. Provide Type X where part of a rated partition.

2.3.4 Not Used

2.3.5 Not Used

2.3.6 Not Used

2.3.7 Not Used

2.3.8 Exterior Sheathing Board

Exterior sheathing board shall conform to ASTM C1177 and ASTM C 79/C 79M, Type X, shall have water-resistant gypsum core, water-repellant glass mat faces each side and long edges, with square edges, and be (48 inches) wide.

2.4 TRIM, MOLDINGS, AND ACCESSORIES

2.4.1 Taping and Embedding Compound

Taping and embedding compound shall conform to ASTM C 475. Compound shall be specifically formulated and manufactured for use in embedding tape at gypsum wallboard joints and fastener heads, and shall be compatible with tape and substrate.

2.4.2 Finishing or Topping Compound

Finishing or topping compound shall conform to ASTM C 475. Compound shall be specifically formulated and manufactured for use as a finishing compound for gypsum board.

2.4.3 All-Purpose Compound

All-purpose compound shall be specifically formulated and manufactured to use as a taping and finishing compound, and shall be compatible with tape and substrate.

2.4.4 Joint Tape

Joint tape shall conform to ASTM C 475 and shall be as recommended by gypsum board manufacturer.

2.4.5 Trim, Control Joints, Beads, Stops and Nosings

Items used to protect edges, corners, and to provide architectural features shall be in accordance with ASTM C 1047.

2.5 FASTENINGS AND ADHESIVES

2.5.1 Nails

Nails shall conform to ASTM C 514. Nails shall be hard-drawn low or medium-low carbon steel, suitable for intended use.

2.5.2 Screws

Screws shall conform to ASTM C 1002. Screws shall be self-drilling and self-tapping steel, Type G for gypsum board to gypsum board Type S for light-gauge steel framing.

2.5.3 Adhesives

Adhesives shall conform to ASTM C 557. For securing gypsum board to metal framing, adhesive shall be as recommended by gypsum board manufacturer.

2.5.4 Hangers

Suspended ceiling runner channel hangers shall be soft, annealed steel wire not less than No. 8 SWG, conforming to ASTM A 853 or flat iron or steel straps, at least (3/32 x 7/8 inch) size, coated with zinc, cadmium, or rust-inhibiting paint.

2.5.5 Wire and Clip Type Fastenings

Tie wire, clips, rings, and other fastenings shall be corrosion-resisting steel conforming to ASTM A 580/A 580M, composition 302, 304, or 316, Condition A, except that walls, partitions, and other vertical surfaces not incorporated in ceiling construction may be erected with soft, annealed steel conforming to ASTM A 853.

2.5.5.1 Tie Wire

Tie wire for constructing partitions and vertical furring, for securing metal lath to supports, and for lacing shall be not less than No. 18 SWG. Tie wire for other applications shall be not less than No. 16 SWG.

2.5.5.2 Clips

Clips used in lieu of tie wire for securing the furring channels to the runner channels in ceiling construction shall be made from strip not less than (1/8 inch) thick or shall be hairpin clip, formed of wire not less than (0.01620 inch) nominal diameter. Other clips and rings or fastenings of similar materials shall be equivalent in holding power to that provided by tie wire for the specific application.

2.6 CEMENTITIOUS BACKER UNITS

Cementitious backer units shall comply with ANSI A118.9 and shall be 13 mm (1/2 inch) thick, fiber reinforced concrete panels.

2.7 COLUMN COVERS

Interior column covers shall be factory fabricated components composed of high density gypsum, reinforced with continuous filament random glass fiber matt. Chopped strand fiber reinforcing is not permitted. Shell thickness shall be 3 to 5 mm (1/8 to 3/16 inches) thick; weight shall be a maximum of .91 kg./0.09 sm (2 lbs./sq.ft.); and compressive strength shall be between 29 to 31 MPa (4200 and 4500 psi). Components shall be reinforced with steel or wood and shall be ready to receive primer and paint in accordance with Section 09915 COLOR SCHEDULE.

2.8 CEILING SPRAY TEXTURE

Ceiling spray texture shall be formulated with polystyrene aggregate for spray application in medium texture to produce acoustical finish appearance on precast concrete and gypsum board ceilings. High hide finish shall not require overpainting. Formula shall have a maximum flame spread rating of 10 and smoke developed rating of 25 or less. Provide manufacturer's recommended primer as basecoat for all ceiling surfaces scheduled to receive spray texture.

PART 3 EXECUTION

3.1 INTERIOR WALL FRAMING

Steel framing and furring members shall be installed in accordance with ASTM C 754. Members shall be in alignment with spacings not to exceed the maximum spacings indicated on drawings. Runners shall be aligned accurately at the floor and ceiling and securely anchored.

3.1.1 Wall Openings

The framing system shall provide for the installation and anchorage of the required subframes or finish frames for wall openings at doors, pass-through openings, and access panels. Partitions abutting continuous suspended ceilings shall be strengthened for rigidity at rough openings of more than (30 inches) wide. Studs at openings shall be minimum bare metal thickness and spot grouted at jamb anchor inserts. Double studs shall be fastened together with screws and secured to floor and overhead runners. Two studs shall be used for framing solid-core doors, doors over (36 inches) wide and extra-heavy doors .

3.1.2 Wall Control Joints

Control joints for expansion and contraction in the walls shall be constructed with double studs installed (1/2 inch) apart in interior walls or wall furrings where indicated on drawings. Control joint spacing shall not exceed (30 feet). Ceiling-height door frames may be used as vertical control joints. Door frames of less than ceiling height may be used as control joints only if standard control joints extend to ceiling from both corners of top of door frame. Control joints between studs shall be filled with firesafing insulation in fire rated partitions.

3.1.3 Blocking

Blocking shall be provided as necessary for mounted equipment. Blocking shall be metal or wood and shall be cut to fit between framing members. Blocking shall be rigidly anchored to the framing members. Under no circumstances will accessories or other wall mounted equipment be anchored directly to gypsum wallboard.

3.2 Not Used

3.3 SUSPENDED CEILING FRAMING

Suspended ceiling system framing shall be installed in accordance with ASTM C 754.

3.3.1 Hangers

Hangers shall be spaced not more than (48 inches) along runner channels

and (36 inches) in the other direction or (42 inches) in both directions unless otherwise indicated. Locations of hanger wires shall be coordinated with other work. Hangers at ends of runner channels shall be located not more than (6 inches) from wall. Hanger wire shall be looped around bottom chord of open-web steel joists, or secured to structural elements with suitable fasteners. Sags or twists which develop in the suspended system shall be adjusted. Damaged or faulty parts shall be replaced.

3.3.2 Main Runners

Main runner channels shall be installed in accordance with ASTM C 754. Hanger wires shall be double strand saddle-tied to runner channels and the ends of hanger wire shall be twisted three times around itself. Main runners shall be located to within (6 inches) of the paralleling wall to support the ends of cross furring. Main runners shall not come in contact with abutting masonry or concrete walls. Where main runners are spliced, ends shall be overlapped (12 inches) with flanges of channels interlocked, and shall be securely tied at each end of splice with wire looped twice around the channels.

3.3.3 Furring Channels

Furring channels shall be spaced in accordance with ASTM C 754. Furring channels shall be secured to the runner channels and to structural supports at each crossing with tie wire, hairpin clips, or equivalent fastenings. Furring channels shall be located within (2 inches) of parallel walls and beams, and shall be cut (1/2 inch) short of abutting walls.

3.3.4 Ceiling Openings

Support members shall be provided as required at ceiling openings for access panels, recessed light fixtures, and air supply or exhaust. Support members shall be not less than (1-1/2 inch) main runner channels and vertically installed suspension wires or straps shall be located to provide at least the minimum support specified herein for furring and wallboard attachment. Intermediate structural members not a part of the structural system, shall be provided for attachment or suspension of support members.

3.3.5 Light Fixtures and Air Diffusers

Light fixtures and air diffusers shall be supported directly from suspended ceiling runners. Wires shall be provided at appropriate locations to carry the weight of recessed or surface mounted light fixtures and air diffusers.

3.3.6 Control Joints

Ceiling control joints for expansion and contraction shall be located where indicated on drawings. A control joint or intermediate blocking shall be installed where ceiling framing members change direction.

3.3.6.1 Interior Ceilings With Perimeter Relief

Control joints shall be installed so that linear dimensions between control joints shall not exceed (50 feet) in either direction nor more than (2500 square feet).

3.3.6.2 Interior Ceilings Without Perimeter Relief

Control joints shall be installed so that linear dimensions between control

joints shall not exceed (30 feet) in either direction nor more than (900 square feet).

3.4 APPLICATION OF GYPSUM BOARD

Gypsum board shall be installed in accordance with ASTM C 840 and GA 216 and as specified. Paragraph 17.3.1 GENERAL of ASTM C 840 which permits usage of water resistant gypsum board as a base for adhesive application of ceramic or plastic tile on ceilings, does not apply. Edges and ends of gypsum boards shall be cut to obtain neat fitting joints. End joints of adjoining boards shall be staggered, and shall be staggered on opposite sides of wall. Boards shall be applied with moderate contact without forcing in place. Holes for pipes, fixtures or other small openings shall be cut with a tool which will provide a neat fit. Screws shall be driven so that the heads are slightly below the plane of paper face. Fracturing the paper face or damaging the core shall be avoided. Trim shall be installed at external and internal angles formed by the intersecting gypsum board surfaces with other surfaces. Corner beads shall be installed to vertical and horizontal corners in accordance with manufacturer's published instructions.

3.4.1 Two-Ply Gypsum Board

Second layer of gypsum board shall be applied perpendicular to first layer with joints staggered and secured with mechanical fasteners.

3.4.2 Not Used

3.4.3 Water-Resistant Gypsum Board

Water-resistant gypsum board shall be installed at walls located in toilet rooms which are scheduled to be painted and at locations indicated.

3.4.4 Adhesively-Applied Gypsum Board

Walls to receive adhesively-applied gypsum board shall be dry, free of dust, oil, or form release agents, protrusions or voids, or foreign matter that would affect a proper bond.

3.4.5 Exterior Sheathing

Exterior sheathing shall be flashed at openings so that water intrusion will not contact the sheathing. Vertical end and edge joints shall abut over the centers of framing members and shall be offset a minimum of one framing space between adjacent rows of gypsum sheathing. If sheathing is installed and exposed to the elements for more than one month, joints shall be taped with fiberglass tape embedded in sealant. Sheathing and accessories shall be installed in accordance with manufacturer's instructions.

3.5 TRIM, MOLDINGS, AND ACCESSORIES INSTALLATION

Trim, moldings and accessories shall be installed in accordance with GA 216.

3.6 TAPING AND FINISHING

Gypsum board taping and finishing shall be performed in accordance with ASTM C 840. Boards shall be kept free of dirt, oil and other foreign matter that could cause a lack of bond. Screw heads, dents, gouges, and

cut-outs shall be filled with joint compound and sanded. Accessories at exposed joints, edges, corners, openings, and similar locations shall be taped, floated with joint compound, and sanded to produce surfaces ready for gypsum board finishes.

3.7 APPLICATION OF CEMENTITIOUS BACKER UNITS

Cementitious backer units shall be installed in accordance with ANSI A108.11. Cementitious backer units shall be provided in lieu of gypsum board and substrate for all plumbing walls scheduled to receive ceramic tile, at interior applications of stone veneer, and as indicated. Fasteners shall be the type designed for cement board application.

3.8 FIRE-RESISTANT ASSEMBLIES

Gypsum wallboard construction for fire-rated assemblies shall be in accordance with UL Fire Resist Dir, or GA 600 for the design number indicated on drawings.

3.9 PATCHING

Surface defects and damage shall be corrected as required to leave gypsum board smooth, uniform in appearance, and ready to receive finish as specified.

3.10 COLUMN COVERS

Column covers shall be installed according to manufacturer's recommendations. Components shall be fasten with self drilling, self tapping bugle head screws through face or back. Joints shall be taped, filled and sanded in preparation for field finishing.

3.11 CEILING SPRAY TEXTURE

Remove all oils, grease and other deposits from concrete surfaces. Finish patched or repaired areas to provide a uniform texture and surface. Grind down any ridges or other protrusions resulting from forms or other causes to the same level as adjacent surfaces. Apply filler as required to provide a smooth, level surface, free of irregularities. When all surfaces are prepared and dry, apply primer coat. Apply finishing spray texture material to blend uniformly and cover fully without starved spots or other evidence of thin application. Provide uniform texture without application patterns. Remove any texture droppings or overspray from walls, windows and floors.

-- End of Section --

SECTION TABLE OF CONTENTS

DIVISION 09 - FINISHES

SECTION 09310

CERAMIC TILE

07/98

PART 1 GENERAL

1.1 REFERENCES
1.2 SUBMITTALS
1.3 DELIVERY AND STORAGE
1.4 ENVIRONMENTAL REQUIREMENTS
1.5 WARRANTY

PART 2 PRODUCTS

2.1 TILE
2.1.1 Floor Tile
2.1.2 Glazed Wall Tile
2.2 Not Used
2.3 WATER
2.4 MORTAR, GROUT, AND ADHESIVE
2.4.1 Dry-Set Portland Cement Mortar
2.4.2 Not Used
2.4.3 Latex-Portland Cement Mortar
2.4.4 Ceramic Tile Grout
2.5 MARBLE THRESHOLDS
2.6 METAL EDGE STRIP
2.7 CLEAVAGE MEMBRANE
2.8 WATERPROOF MEMBRANE
2.9 SEALER

PART 3 EXECUTION

3.1 PREPARATORY WORK AND WORKMANSHIP
3.2 GENERAL INSTALLATION REQUIREMENTS
3.3 INSTALLATION OF WALL TILE
3.3.1 Not Used
3.3.2 Dry-Set Mortar and Latex-Portland Cement Mortar
3.4 INSTALLATION OF FLOOR TILE
3.4.1 Not Used
3.4.2 Dry-Set and Latex-Portland Cement
3.4.3 Not Used
3.4.4 Ceramic Tile Grout
3.4.5 Not Used
3.4.6 Not Used
3.4.7 Metal Edge Strips
3.4.8 Cleavage Membrane
3.4.9 Waterproof Membrane
3.5 Not Used
3.6 INSTALLATION OF MARBLE THRESHOLDS
3.7 Not Used

3.8 EXPANSION JOINTS
3.8.1 Walls
3.9 CLEANING AND PROTECTING

-- End of Section Table of Contents --

SECTION 09310

CERAMIC TILE
07/98

PART 1 GENERAL

1.1 REFERENCES

The publications listed below form a part of this specification to the extent referenced. The publications are referred to in the text by basic designation only.

AMERICAN NATIONAL STANDARDS INSTITUTE (ANSI)

ANSI A108.1A	(1992) Installation of Ceramic Tile in the Wet-Set Method, with Portland Cement Mortar
ANSI A108.1B	(1992) Installation of Ceramic Tile on a Cured Portland Cement Mortar Setting Bed with Dry-Set or Latex Portland Cement Mortar
ANSI A108.5	(1992) Installation of Ceramic Tile with Dry-Set Portland Cement Mortar or Latex-Portland Cement Mortar
ANSI A108.10	(1992) Installation of Grout in Tilework
ANSI A118.1	(1992) Dry-Set Portland Cement Mortar
ANSI A118.4	(1992) Latex-Portland Cement Mortar
ANSI A118.6	(1992) Ceramic Tile Grouts
ANSI A137.1	(1988) Ceramic Tile

AMERICAN SOCIETY FOR TESTING AND MATERIALS (ASTM)

ASTM C 241	(1990) Abrasion Resistance of Stone Subjected to Foot Traffic
ASTM C 373	(1988; R 1994) Water Absorption, Bulk Density, Apparent Porosity, and Apparent Specific Gravity of Fired Whiteware Products
ASTM C 648	(1984; R 1994) Breaking Strength of Ceramic Tile
ASTM C 1026	(1987; R 1996) Measuring the Resistance of Ceramic Tile to Freeze-Thaw Cycling
ASTM C 1027	(1984; R 1990) Determining Visible Abrasion Resistance of Glazed Ceramic Tile

ASTM C 1028	(1996) Determining the Static Coefficient of Friction of Ceramic Tile and Other Like Surfaces by the Horizontal Dynamometer Pull-Meter Method

MARBLE INSTITUTE OF AMERICA (MIA)

MIA Design Mnl	(1991) Design Manual IV Dimensional Stone

TILE COUNCIL OF AMERICA (TCA)

TCA Hdbk	(1997) Handbook for Ceramic Tile Installation

1.2 SUBMITTALS

Government approval is required for submittals with a "GA" designation; submittals having an "FIO" designation are for information only. The following shall be submitted in accordance with Section 01330 SUBMITTAL PROCEDURES:

SD-01 Data

Tile; FIO. Setting-Bed; FIO. Mortar, Grout, and Adhesive; FIO.

Manufacturer's catalog data including instructions for care and maintenance of the ceramic tile surfaces.

SD-14 Samples

Tile; GA1. Accessories; GA1.

Samples of sufficient size to show color range, pattern, type and joints.

1.3 DELIVERY AND STORAGE

Materials shall be delivered to the project site in manufacturer's original unopened containers with seals unbroken and labels and hallmarks intact. Materials shall be kept dry, protected from weather, and stored under cover in accordance with manufacturer's instructions.

1.4 ENVIRONMENTAL REQUIREMENTS

Ceramic tile work shall not be performed unless the substrate and ambient temperature is at least (50 degrees F) and rising. Temperature shall be maintained above (50 degrees F) while the work is being performed and for at least 7 days after completion of the work. When temporary heaters are used they shall be vented to the outside to avoid carbon dioxide damage to new tilework.

1.5 WARRANTY

Manufacturer's standard performance guarantees or warranties that extend beyond a 1-year period shall be provided.

PART 2 PRODUCTS

2.1 TILE

Tile shall be standard grade conforming to ANSI A137.1. Containers shall be grade sealed. Seals shall be marked to correspond with the marks on the signed master grade certificate. Tile shall be impact resistant with a minimum breaking strength for wall tile of (90 lbs) and (250 lbs) for floor tile in accordance with ASTM C 648. Tile for cold climate projects shall be rated frost resistant by the manufacturer as determined by ASTM C 1026. Floor tile water absorption shall be 0.50 maximum percent in accordance with ASTM C 373. Floor tile shall have a minimum coefficient of friction of 0.60 wet and dry in accordance with ASTM C 1028. Floor tile shall be Class IV-Heavy Traffic, durability classification as rated by the manufacturer when tested in accordance with ASTM C 1027for abrasion resistance as related to foot traffic.

2.1.1 Floor Tile

T-1: Porcelain tile and base shall be glazed with "stone" look surface texture. Tile size shall be 300 x 300 x 9mm (12" x 12" x 5/16"), set in running bond pattern. Base shall be 75 x 300 mm (3" x 12") straight base with bullnose top. Color shall be in accordance with Section 09915 COLOR SCHEDULE.

CT-2: Ceramic mosaic tile and trim shall be unglazed, unpolished with sharply formed face. Tile size shall be (2 x 2 inches). Color shall be in accordance with Section 09915 COLOR SCHEDULE.

2.1.2 Glazed Wall Tile

CT-3: Glazed wall tile, base and trim shall be cushion edged with bright glaze. Tile shall be (6 x 6) inches. Color shall be in accordance with Section 09915 COLOR SCHEDULE.

2.2 Not Used

2.3 WATER

Water shall be potable.

2.4 MORTAR, GROUT, AND ADHESIVE

Mortar, grout, and adhesive shall conform to the following:

2.4.1 Dry-Set Portland Cement Mortar

ANSI A118.1.

2.4.2 Not Used

2.4.3 Latex-Portland Cement Mortar

ANSI A118.4.

2.4.4 Ceramic Tile Grout

ANSI A118.6; latex-portland cement grout, wall and floor types. Color shall be in accordance with Section 09915 COLOR SCHEDULE.

2.5 MARBLE THRESHOLDS

Marble thresholds shall be provided at transitions between ceramic tile and carpet at all guest room/suite bathrooms. All other locations shall use metal edge strip per paragraph 2.6. Threshold size shall be 50 mm (2 inches) wide with 5 mm (3/16 inch) beveled edges, in depth as required by conditions. Marble shall be Group A as classified by MIA Design Mnl. Marble shall have a fine sand-rubbed finish and shall be in color as approved by the Architect. Marble abrasion shall be not less than 12.0 when tested in accordance with ASTM C 241.

2.6 METAL EDGE STRIP

Zinc (white metal) terrazzo edging strip with 3 mm (1/8 inch) exposed top face, and overall height to accommodate tile thickness and floor conditions. Edge strip shall be flush with tile surface and is to be provided at all transitions between porcelain tile (T-1) and carpet in lobbies, corridors, and guest room/suite entrance doors.

2.7 CLEAVAGE MEMBRANE

Per ASNI A108.1A. Provide around columns where structural construction or control joints do not align with architectural control joint layout indicated for tile on drawings.

2.8 WATERPROOF MEMBRANE

Provide liquid based, trowel applied, moisture curing urethane membrane below all ceramic and porcelain floor tile in bathrooms and vending areas on Floors 2,3,and 4. Waterproof membrane to be equivalent to Hydroment Ultra-Set, and shall meet the requirements of ANSI A118.10.

2.9 SEALER

Provide penetrating sealer for all ceramic tile floor surfaces in bathrooms and vending areas. Sealer to be a heavy duty, water-based water repelling sealer similar to "Water Block" as manufactured by Stonetec.

PART 3 EXECUTION

3.1 PREPARATORY WORK AND WORKMANSHIP

Surface to receive tile shall be inspected and shall conform to the requirements of ANSI A108.1A or ANSI A108.1B for surface conditions for the type setting bed specified and for workmanship. Variations of surface to be tiled shall fall within maximum values shown below:

3.2 GENERAL INSTALLATION REQUIREMENTS

Tile work shall not be started until roughing in for mechanical and electrical work has been completed and tested, and built-in items requiring membrane waterproofing have been installed and tested. Floor tile installation shall not be started in spaces requiring wall tile until after wall tile has been installed. Floor tile joints are to align with wall tile joints where ever possible. Tile in colors and patterns indicated shall be applied in the area shown on the drawings. Tile shall be installed with the respective surfaces in true even planes to the elevations and grades shown. Special shapes shall be provided as required for sills, jambs, recesses, offsets, external corners, and other conditions to provide a complete and neatly finished installation. Tile bases and coves shall be solidly backed with mortar.

3.3 INSTALLATION OF WALL TILE

Wall tile shall be installed in accordance with TCA Hdbk, method W202 at concrete masonry walls; method W243 at metal stud walls with gypsum board substrate, and method W244 at metal stud walls with cementitious tile backer substrate.

3.3.1 Not Used

3.3.2 Dry-Set Mortar and Latex-Portland Cement Mortar

Dry-set or Latex-portland cement shall be used to install tile in accordance with ANSI A108.5. Latex portland cement shall be used when installing porcelain ceramic tile.

3.4 INSTALLATION OF FLOOR TILE

Floor tile shall be installed in accordance with TCA Hdbk, method F113.

3.4.1 Not Used

3.4.2 Dry-Set and Latex-Portland Cement

Dry-set or latex-portland cement mortar shall be used to install tile directly over properly cured, plain, clean concrete slabs in accordance with ANSI A108.5. Latex portland cement shall be used when installing porcelain tile.

3.4.3 Not Used

3.4.4 Ceramic Tile Grout

Ceramic Tile grout shall be prepared and installed in accordance with ANSI A108.10.

3.4.5 Not Used

3.4.6 Not Used

3.4.7 Metal Edge Strips

Secure edge strips to concrete substrate at tile perimeter and openings, prior to installing grout.

3.4.8 Cleavage Membrane

Install membrane in recommended width 600 mm (24 inches) centered over joint in substrate.

3.4.9 Waterproof Membrane

Apply liquid membrane 30 mils thick with a trowel over concrete substrate. Install tile over the cured membrane in accordance with manufacturer's recommendations.

3.5 Not Used

3.6 INSTALLATION OF MARBLE THRESHOLDS

Thresholds shall be installed in a manner similar to that of the ceramic tile floor. Thresholds shall be the full width of the opening and positioned to be directly under the door.. Head joints at ends shall not exceed (1/4 inch) in width and shall be grouted full as specified for ceramic tile.

3.7 Not Used

3.8 EXPANSION JOINTS

Joints shall be formed as indicated and sealed as specified in Section 07900 JOINT SEALING.

3.8.1 Walls

Expansion joints shall be provided at control joints in backing material. Wherever backing material changes, an expansion joint shall be installed to separate the different materials.

3.9 CLEANING AND PROTECTING

Upon completion, tile floor surfaces shall be thoroughly cleaned in accordance with manufacturer's approved cleaning instructions. Acid shall not be used for cleaning glazed tile. Floor tile with resinous grout or with factory mixed grout shall be cleaned in accordance with instructions of the grout manufacturer and sealed to prevent or minimize staining. Apply two coats of sealer in accordance with manufacturer's application instructions. Protect sealed floor surfaces until sealer has fully cured.

After the grout has set, tile wall surfaces shall be given a protective coat of a noncorrosive soap or other approved method of protection. Tiled floor areas shall be covered with building paper before foot traffic is permitted over the finished tile floors. Board walkways shall be laid on tiled floors that are to be continuously used as passageways by workmen. Damaged or defective tiles shall be replaced.

-- End of Section --

SECTION TABLE OF CONTENTS

DIVISION 09 - FINISHES

SECTION 09510

ACOUSTICAL CEILINGS

08/96

PART 1 GENERAL

1.1 REFERENCES
1.2 GENERAL REQUIREMENTS
1.3 SUBMITTALS
1.4 DELIVERY AND STORAGE
1.5 ENVIRONMENTAL REQUIREMENTS
1.6 SCHEDULING
1.7 WARRANTY
1.8 EXTRA MATERIALS

PART 2 PRODUCTS

2.1 ACOUSTICAL UNITS
2.1.1 Units for Exposed-Grid System
2.2 SUSPENSION SYSTEM
2.3 HANGERS
2.4 Not Used
2.5 Not Used
2.6 FINISHES
2.7 COLORS
2.8 CEILING ATTENUATION CLASS AND TEST
2.9 ACOUSTIC TREATMENT at MECHANICAL ROOM

PART 3 EXECUTION

3.1 INSTALLATION
3.1.1 Suspension System
3.1.1.1 Plumb Hangers
3.1.2 Wall Molding
3.1.3 Acoustical Units
3.2 Not Used
3.3 CLEANING

-- End of Section Table of Contents --

SECTION 09510

ACOUSTICAL CEILINGS
08/96

PART 1 GENERAL

1.1 REFERENCES

The publications listed below form a part of this specification to the extent referenced. The publications are referred to in the text by basic designation only.

AMERICAN SOCIETY FOR TESTING AND MATERIALS (ASTM)

ASTM C 635	(1995) Manufacture, Performance, and Testing of Metal Suspension Systems for Acoustical Tile and Lay-In Panel Ceilings
ASTM C 636	(1996) Installation of Metal Ceiling Suspension Systems for Acoustical Tile and Lay-In Panels
ASTM E 1264	(1990) Standard Classification for Acoustical Ceiling Products
ASTM E 1414	(1991a) Standard Test for Airborne Sound Attenuation Between Rooms Sharing a Common Ceiling Plenum

1.2 GENERAL REQUIREMENTS

Acoustical treatment shall consist of sound controlling units mechanically mounted on a ceiling suspension system. The unit size, texture, finish, and color shall be as specified. The location and extent of acoustical treatment shall be as shown on the drawings.

1.3 SUBMITTALS

Government approval is required for submittals with a "GA" designation; submittals having an "FIO" designation are for information only. The following shall be submitted in accordance with Section 01330 SUBMITTAL PROCEDURES:

SD-01 Data

Acoustical Ceiling System; FIO. Spray Applied Acoustical Treament; FIO.

Manufacturer's descriptive data, catalog cuts, and installation instructions.

SD-14 Samples

Acoustical Units; FIO. Spray Applied Acoustical Treament; FIO

Two samples of each type of acoustical unit and each type of suspension

grid tee section showing texture, finish, and color.

1.4 DELIVERY AND STORAGE

Materials shall be delivered to the site in the manufacturer's original unopened containers with brand name and type clearly marked. Materials shall be carefully handled and stored in dry, watertight enclosures. Immediately before installation, acoustical units shall be stored for not less than 24 hours at the same temperature and relative humidity as the space where they will be installed in order to assure proper temperature and moisture acclimation.

1.5 ENVIRONMENTAL REQUIREMENTS

A uniform temperature of not less than (60 degrees F) nor more than (85 degrees F) and a relative humidity of not more than 70 percent shall be maintained before, during, and after installation of acoustical units.

1.6 SCHEDULING

Interior finish work such as plastering, concrete and terrazzo work shall be complete and dry before installation. Mechanical, electrical, and other work above the ceiling line shall be completed and heating, ventilating, and air conditioning systems shall be installed and operating in order to maintain temperature and humidity requirements.

1.7 WARRANTY

Manufacturer's standard performance guarantees or warranties that extend beyond a one year period shall be provided.

1.8 EXTRA MATERIALS

Spare tiles of each color shall be furnished at the rate of 5 tiles for each 1000 tiles installed. Tiles shall be from the same lot as those installed.

PART 2 PRODUCTS

2.1 ACOUSTICAL UNITS

Acoustical units shall conform to ASTM E 1264, Class A, and the following requirements:

2.1.1 Units for Exposed-Grid System

Type: III (mineral fiber with painted finish). Type III acoustical units shall have a minimum recycled material content of 18 percent.

Minimum NRC: 0.55 when tested on mounting No. E-400

Pattern: 23 mm (15/16 inch) wide scoring to create nominal 600 x 600 mm (24 x 24 inch) squares.

Nominal size: (24 by 48 inches).

Edge detail: Angled tegular edge (20 degrees) with field tegularized perimeter installation detail.

Finish: Factory-applied standard finish.

Minimum LR coefficient: 0.70.

Minimum CAC: .35.

2.2 SUSPENSION SYSTEM

Suspension system shall be exposed standard width flange, and shall conform to ASTM C 635 for intermediate-duty systems. Surfaces exposed to view shall be aluminum or steel with a factory-applied white baked-enamel finish . Wall molding shall have a flange of not less than (15/16 inch). Standard corners shall be provided. Suspended ceiling framing system shall have the capability to support the finished ceiling, light fixtures, air diffusers, and accessories, as shown. The suspension system shall have a maximum deflection of 1/360 of span length.

2.3 HANGERS

Hangers shall be galvanized steel wire. Hangers and attachment shall support a minimum (300 pound) ultimate vertical load without failure of supporting material or attachment.

2.4 Not Used

2.5 Not Used

2.6 FINISHES

Acoustical units shall have a medium scale textured finish: appearance shall be similar to "Bold Look" by Armstrong World Industries. Suspension system members shall have manufacturer's standard finish. Ceiling suspension system components shall be treated to inhibit corrosion.

2.7 COLORS

Colors for acoustical units and suspension system components shall be as specified in Section 09915 COLOR SCHEDULE.

2.8 CEILING ATTENUATION CLASS AND TEST

Ceiling attenuation class (CAC) range of acoustical units, when required, shall be determined in accordance with ASTM E 1414. Test ceiling shall be continuous at the partition and shall be assembled in the suspension system in the same manner that the ceiling will be installed on the project. System shall be tested with all acoustical units installed.

2.9 ACOUSTIC TREATMENT at MECHANICAL ROOM

Acoustic treatment at the ceiling to be a spray-applied thermal and acoustical insulation, similar to "K-13 Spray-On Systems" by International Cellulose Corporation. Surface to be semi-smooth textured and reinforced with supplemental adhesive to provide high abuse surface. Overall thickness of treatment to be 38 mm (1-1/2 inch). Color to be chosen from manufacturer's standard white colors.

PART 3 EXECUTION

3.1 INSTALLATION

Acoustical work shall be provided complete with necessary fastenings, clips, and other accessories required for a complete installation. Mechanical fastenings shall not be exposed in the finished work. Hangers shall be laid out for each individual room or space. Hangers shall be placed to support framing around beams, ducts, columns, grilles, and other penetrations through ceilings. Main runners and carrying channels shall be kept clear of abutting walls and partitions. At least two main runners shall be provided for each ceiling span. Wherever required to bypass an object with the hanger wires, a sub suspension system shall be installed, so that all hanger wires will be plumb.

3.1.1 Suspension System

Suspension system shall be installed in accordance with ASTM C 636 and as specified herein. There shall be no hanger wires or other loads suspended from underside of steel decking.

3.1.1.1 Plumb Hangers

Hangers shall be plumb and shall not press against insulation covering ducts and pipes.

3.1.2 Wall Molding

Wall molding shall be provided where ceilings abut vertical surfaces. Wall molding shall be secured not more than (3 inches) from ends of each length and not more than (16 inches) on centers between end fastenings. Wall molding springs shall be provided at each acoustical unit in semi-exposed or concealed systems.

3.1.3 Acoustical Units

Acoustical units shall be installed in accordance with the approved installation instructions of the manufacturer. Edges of acoustical units shall be in close contact with metal supports, with each other, and in true alignment. Acoustical units shall be arranged so that units less than one-half width are minimized. Units in exposed-grid system shall be held in place with manufacturer's standard hold-down clips, if units weigh less than (1 psf) or if required for fire resistance rating.

3.2 Not Used

3.3 CLEANING

Following installation, dirty or discolored surfaces of acoustical units shall be cleaned and left free from defects. Units that are damaged or improperly installed shall be removed and new units provided as directed.

-- End of Section --

SECTION TABLE OF CONTENTS

DIVISION 09 - FINISHES

SECTION 09650

RESILIENT FLOORING

07/96

PART 1 GENERAL

1.1 REFERENCES
1.2 FIRE RESISTANCE REQUIREMENTS
1.3 SUBMITTALS
1.4 DELIVERY AND STORAGE
1.5 ENVIRONMENTAL REQUIREMENTS
1.6 SCHEDULING
1.7 WARRANTY
1.8 EXTRA MATERIALS

PART 2 PRODUCTS

2.1 VINYL-COMPOSITION TILE
2.2 Not Used
2.3 RUBBER FLOORING TYPE
2.3.1 Rubber Tile
2.3.2 Stair Treads, Risers and Landings
2.4 Not Used
2.5 RESILIENT BASE
2.6 Not Used
2.7 TRANSITION STRIP
2.8 ADHESIVE
2.9 POLISH
2.10 CAULKING AND SEALANTS
2.11 MANUFACTURER'S COLOR AND TEXTURE

PART 3 EXECUTION

3.1 EXAMINATION/VERIFICATION OF CONDITIONS
3.2 SURFACE PREPARATION
3.3 MOISTURE TEST
3.4 INSTALLATION OF VINYL-COMPOSITION TILE
3.5 INSTALLATION OF RUBBER FLOORING
3.6 Not Used
3.7 INSTALLATION OF RESILIENT BASE
3.8 INSTALLATION OF TREADS AND RISERS
3.9 CLEANING
3.10 PROTECTION

-- End of Section Table of Contents --

SECTION 09650

RESILIENT FLOORING
07/96

PART 1 GENERAL

1.1 REFERENCES

The publications listed below form a part of this specification to the extent referenced. The publications are referred to in the text by basic designation only.

AMERICAN SOCIETY FOR TESTING AND MATERIALS (ASTM)

ASTM D 2240	(1997) Rubber Property - Durometer Hardness
ASTM D 4078	(1992; R 1996) Water Emulsion Floor Polish
ASTM E 84	(1997) Surface Burning Characteristcs of Building Materials
ASTM E 648	(1997) Critical Radiant Flux of Floor-Covering Systems Using a Radiant Heat Energy Source
ASTM F 1066	(1995a) Vinyl Composition Floor Tile
ASTM F 1344	(1993) Rubber Floor Tile

1.2 FIRE RESISTANCE REQUIREMENTS

Flooring in corridors and exits shall have a minimum average critical radiant flux of 0.45 watts per square centimeter when tested in accordance with ASTM E 648. The smoke density rating shall be less than 450 when tested in accordance with ASTM E 662

1.3 SUBMITTALS

Government approval is required for submittals with a "GA" designation; submittals having an "FIO" designation are for information only. The following shall be submitted in accordance with Section 01330 SUBMITTAL PROCEDURES:

SD-01 Data

Resilient Flooring and Accessories; FIO.

Manufacturer's descriptive data and installation instructions including cleaning and maintenance instructions.

SD-09 Reports

Resilient Flooring and Accessories; FIO.

Copies of test reports showing that representative product samples of the flooring proposed for use have been tested by an independent testing laboratory within the past three years or when formulation change occurred and conforms to the requirements specified.

SD-14 Samples

Resilient Flooring and Accessories; GAI.

Three samples of each indicated color and type of flooring and base. Sample size shall be minimum (2-1/2 x 4) inches.

1.4 DELIVERY AND STORAGE

Materials shall be delivered to the building site in original unopened containers bearing the manufacturer's name, project identification, and handling instructions. Materials shall be stored in a clean dry area with temperature maintained above (70 degrees F) for 2 days prior to installation, and shall be stacked according to manufacturer's recommendations. Materials shall be protected from the direct flow of heat from hot-air registers, radiators and other heating fixtures and appliances.

1.5 ENVIRONMENTAL REQUIREMENTS

Areas to receive resilient flooring shall be maintained at a temperature above (70 degrees F) and below (100 degrees F) for 2 days before application, during application and 2 days after application. A minimum temperature of (55 degrees F) shall be maintained thereafter.

1.6 SCHEDULING

Resilient flooring application shall be scheduled after the completion of other work which would damage the finished surface of the flooring.

1.7 WARRANTY

Manufacturer's standard performance guarantees or warranties that extend beyond a one year period shall be provided.

1.8 EXTRA MATERIALS

Extra flooring material of each color and pattern shall be furnished at the rate of1% of installed floor area for each type of tile. Extra materials shall be from the same lot as those installed. Extra base material composed of (20 linear feet) of each color shall be furnished.

PART 2 PRODUCTS

2.1 VINYL-COMPOSITION TILE

Vinyl-composition tile shall conform to ASTM F 1066, Class 2,(through pattern tile), Composition 1, asbestos-free, and shall be square and thick. Tile shall have the color and pattern uniformly distributed throughout the thickness of the tile. Flooring in any one continuous area shall be from the same lot and shall have the same shade and pattern.

2.2 Not Used

2.3 RUBBER FLOORING TYPE

2.3.1 Rubber Tile

Rubber tile shall conform to ASTM F 1344 Class 1 homogeneous construction, Type A (solid color) Class A, and shall meet requirements for a Class A finish per ASTM E 84. Durometer hardness shall be not less than 90, when tested in accordance with ASTM D 2240. Tile shall be Surface shall be raised round studs with chamfered edges. Overall thickness at treads shall be not less than . Stud profile shall be 0.5 mm (0.02 inches) high.

2.3.2 Stair Treads, Risers and Landings

Treads, risers, and landing material shall conform to 2.3.1 Rubber Tile. Stair tread/nosing/riser design shall be one piece. Installation shall include matching landing surface and trim.

2.4 Not Used

2.5 RESILIENT BASE

Base shall be manufacturers standard vinyl, straight style (installed with carpet) coved style (installed with resilient flooring). Base shall be high and a minimum inch thick. Job Formed corners shall be furnished.

2.6 Not Used

2.7 TRANSITION STRIP

A vinyl or rubber transition strip (to match flooring material and color), tapered to meet abutting material, shall be provided.

2.8 ADHESIVE

Adhesive for flooring and wall base shall be as recommended by the flooring manufacturer.

2.9 POLISH

Polish shall conform to ASTM D 4078.

2.10 CAULKING AND SEALANTS

Caulking and sealants shall be in accordance with Section 07900 JOINT SEALING.

2.11 MANUFACTURER'S COLOR AND TEXTURE

Color and texture shall be in accordance with Section 09915 COLOR SCHEDULE.

PART 3 EXECUTION

3.1 EXAMINATION/VERIFICATION OF CONDITIONS

The Contractor shall examine and verify that site conditions are in agreement with the design package and shall report all conditions that will prevent a proper installation. The Contractor shall not take any corrective action without written permission from the Government.

3.2 SURFACE PREPARATION

Flooring shall be in a smooth, true, level plane, except where indicated as sloped. Before any work under this section is begun, all defects such as rough or scaling concrete, low spots, high spots, and uneven surfaces shall have been corrected, and all damaged portions of concrete slabs shall have been repaired as recommended by the flooring manufacturer. Concrete curing compounds, other than the type that does not adversely affect adhesion, shall be entirely removed from the slabs. Paint, varnish, oils, release agents, sealers, waxers, and adhesives shall be removed, as recommended by the flooring manufacturer.

3.3 MOISTURE TEST

The suitability of the concrete subfloor for receiving the resilient flooring with regard to moisture content shall be determined by a moisture test where recommended by the flooring manufacturer.

3.4 INSTALLATION OF VINYL-COMPOSITION TILE

Tile flooring shall be installed with adhesive in accordance with the manufacturer's installation instructions. Tile lines and joints shall be kept square, symmetrical, tight, and even. Edge width shall vary as necessary to maintain full-size tiles in the field, but no edge tile shall be less than one-half the field tile size, except where irregular shaped rooms make it impossible. Flooring shall be cut to, and fitted around, all permanent fixtures, built-in furniture and cabinets, pipes, and outlets. Edge tile shall be cut, fitted, and scribed to walls and partitions after field flooring has been applied.

3.5 INSTALLATION OF RUBBER FLOORING

Rubber flooring shall be installed with adhesive in accordance with the manufacturer's written installation instructions. Lines and joints shall be kept square, symmetrical, tight, and even. Edge width shall vary as necessary to maintain full-size tiles in the field, but no edge pieces shall be less than one-half the field size, except where irregular shaped rooms make it impossible. Flooring shall be cut to, and fitted around, all permanent fixtures, pipes, and outlets. Edges shall be cut, fitted, and scribed to walls and partitions after field flooring has been applied.

3.6 Not Used

3.7 INSTALLATION OF RESILIENT BASE

Wall base shall be installed with adhesive in accordance with the manufacturer's written instructions. Base joints shall be tight and base shall be even with adjacent resilient flooring. Voids along the top edge of base at masonry walls shall be filled with caulk.

3.8 INSTALLATION OF TREADS AND RISERS

Stair treads and risers shall be installed with adhesive in accordance with the manufacturer's written installation instructions. Treads and risers shall cover the full width of the stairs..

3.9 CLEANING

Immediately upon completion of installation of tile in a room or an area, flooring and adjacent surfaces shall be cleaned to remove all surplus adhesive. After installation, flooring shall be washed with a cleaning solution, rinsed thoroughly with clear cold water, and, except for raised pattern rubber flooring, rubber tile and sheet rubber flooring, rubber stair treads, and static control vinyl tile, given two coats of polish in accordance with manufacturers written instructions. After each polish coat, floors shall be buffed to an even luster with an electric polishing machine. Raised pattern rubber tileflooring, and rubber stair treads, shall be cleaned and maintained as recommended by the manufacturer.

3.10 PROTECTION

From the time of laying until acceptance, flooring shall be protected from damage as recommended by the flooring manufacturer. Flooring which becomes damaged, loose, broken, or curled shall be removed and replaced.

-- End of Section --

SECTION TABLE OF CONTENTS

DIVISION 09 - FINISHES

SECTION 09680

CARPET

09/96

PART 1 GENERAL

1.1 REFERENCES
1.2 SUBMITTALS
1.3 REGULATORY REQUIREMENTS
1.4 DELIVERY AND STORAGE
1.5 ENVIRONMENTAL REQUIREMENTS
1.6 WARRANTY
1.7 EXTRA MATERIAL

PART 2 PRODUCTS

2.1 CARPET
2.1.1 General Description
2.1.2 Carpet Type CPT-2 (Corridors and Elevator Cabs)
2.1.3 Carpet Type CPT-3 (Guest Rooms)
2.1.4 Carpet Type CPT-4 (Corridor Accent)
2.2 ADHESIVES AND CONCRETE PRIMER
2.3 MOLDING
2.4 TAPE
2.5 COLOR, TEXTURE, AND PATTERN

PART 3 EXECUTION

3.1 SURFACE PREPARATION
3.2 MOISTURE AND ALKALINITY TEST
3.3 PREPARATION OF CONCRETE SUBFLOOR
3.4 INSTALLATION
3.4.1 Broadloom Installation
3.5 CLEANING AND PROTECTION
3.5.1 Cleaning
3.5.2 Protection
3.6 REMNANTS

-- End of Section Table of Contents --

SECTION 09680

CARPET
09/96

PART 1 GENERAL

1.1 REFERENCES

The publications listed below form a part of this specification to the extent referenced. The publications are referred to in the text by basic designation only.

AMERICAN SOCIETY FOR TESTING AND MATERIALS (ASTM)

ASTM D 3278	(1996) Test Methods for Flash Point of Liquids by Small Scale Closed-Cup Apparatus

CARPET AND RUG INSTITUTE (CRI)

CRI 104	(1996) Commercial Carpet Installation Standard

1.2 SUBMITTALS

Government approval is required for submittals with a "GA" designation; submittals having an "FIO" designation are for information only. The following shall be submitted in accordance with Section 01330 SUBMITTAL PROCEDURES:

SD-01 Data

Carpet and Accessories; FIO.

Manufacturer's catalog data and printed documentation stating physical characteristics, durability, resistance to fading, and flame resistance characteristics for each type of carpet material and installation accessory.

SD-04 Drawings

Installation; GA1.

Three copies of drawings indicating typical room to receive carpet, carpet types, textures and patterns, direction of pile, location of seams, and locations of edge molding.

SD-06 Instructions

Carpet and Accessories; FIO.

Three copies of the manufacturer's printed installation instructions for the carpet, including preparation of substrate, seaming techniques, and recommended adhesives and tapes.

SD-14 Samples

Carpet and Accessories; GA1.

a. Carpet: Two "Production Quality" samples (27 x 18 inches) of each carpet proposed for use, showing quality, pattern, and color specified.

SD-19 Operation and Maintenance Manuals

Carpet and Accessories; FIO.

Three copies of carpet manufacturer's maintenance instructions describing recommended type of cleaning equipment and material, spotting and cleaning methods, and cleaning cycles.

1.3 REGULATORY REQUIREMENTS

Carpet and adhesives shall bear the Carpet and Rug Institute (CRI) Indoor Air Quality (IAQ) label. Carpet type bearing the label will indicate that the carpet has been tested and meets the criteria of the CRI IAQ Carpet Testing Program, and minimizes the impact on indoor air quality.

1.4 DELIVERY AND STORAGE

Materials shall be delivered to the site in the manufacturer's original wrappings and packages clearly labeled with the manufacturer's name, brand name, size, dye lot number, and related information. Materials shall be stored in a clean, dry, well ventilated area, protected from damage and soiling, and shall be maintained at a temperature above (60 degrees F) for 2 days prior to installation.

1.5 ENVIRONMENTAL REQUIREMENTS

Areas in which carpeting is to be installed shall be maintained at a temperature above (60 degrees F) for 2 days before installation, during installation, and for 2 days after installation. A minimum temperature of (55 degrees F) shall be maintained thereafter for the duration of the contract. Traffic or movement of furniture or equipment in carpeted area shall not be permitted for 24 hours after installation. Other work which would damage the carpet shall be completed prior to installation of carpet.

1.6 WARRANTY

Manufacturer's standard performance guarantees or warranties that extend beyond a one-year period shall be provided.

1.7 EXTRA MATERIAL

Extra material from same dye lot consisting of full width continuous broadloom and uncut carpet tiles shall be provided for future maintenance. A minimum of 2 percent of total (square yards) of each carpet type, pattern, and color shall be provided.

PART 2 PRODUCTS

2.1 CARPET

Notwithstanding Section 00700 CONTRACT CLAUSES FAR 52.236-5, Material and Workmanship, the Carpet shall be manufactured as described in SECTION 09915 COLOR SCHEDULE in order to be fully compatible with and interface with the

existing Phase 1 & 2 Lodging facility. No other products will be acceptable. The competition Advocate authorizes sole source procurement.

2.1.1 General Description

Carpet shall be first quality; free of visual blemishes, streaks, poorly dyed areas, fuzzing of pile yarn, spots or stains, and other physical and manufacturing defects. Carpet materials and treatments shall be reasonably nonallergenic and free of other recognized health hazards. All grade carpets shall have a static control construction which gives adequate durability and performance.

2.1.2 Carpet Type CPT-2 (Corridors and Elevator Cabs)

Refer to SECTION 09915 COLOR SCHEDULE for carpet style, color and manufacturer.

2.1.3 Carpet Type CPT-3 (Guest Rooms)

Refer to SECTION 09915 COLOR SCHEDULE for carpet style, color and manufacturer.

2.1.4 Carpet Type CPT-4 (Corridor Accent)

Refer to SECTION 09915 COLOR SCHEDULE for carpet style, color and manufacturer.

2.2 ADHESIVES AND CONCRETE PRIMER

Adhesives and concrete primers for installation of carpet shall be waterproof, nonflammable, meet local air-quality standards, and shall be as recommended by the carpet manufacturer. Seam adhesive shall be waterproof, nonflammable, and nonstaining as recommended by the carpet manufacturer. Release adhesive for modular tile carpet shall be as recommended by the carpet manufacturer. Adhesives flashpoint shall be minimum 140 degrees F in accordance with ASTM D 3278.

2.3 MOLDING

Vinyl molding shall be heavy-duty and designed for the type of carpet being installed. Floor flange shall be a minimum (2 inches) wide. Color to match carpeting.

2.4 TAPE

Tape for seams shall be as recommended by the carpet manufacturer for the type of seam used in installation.

2.5 COLOR, TEXTURE, AND PATTERN

Color, texture, and pattern shall be in accordance with Section 09915 COLOR SCHEDULE.

PART 3 EXECUTION

3.1 SURFACE PREPARATION

Carpet shall not be installed on surfaces that are unsuitable and will prevent a proper installation. Holes, cracks, depressions, or rough areas

shall be repaired using material recommended by the carpet or adhesive manufacturer. Floor shall be free of any foreign materials and swept broom clean. Before beginning work, subfloor shall be tested with glue and carpet to determine "open time" and bond.

3.2 MOISTURE AND ALKALINITY TEST

Concrete slab shall be tested for moisture content and excessive alkalinity in accordance with CRI 104. The moisture content shall not exceed a hygrometer reading of 65 percent.

3.3 PREPARATION OF CONCRETE SUBFLOOR

Installation of the carpeting shall not commence until concrete substrate is at least 90 days old. The concrete surfaces shall be prepared in accordance with instructions of the carpet manufacturer. Type of concrete sealer, when required, shall be compatible with the carpet.

3.4 INSTALLATION

Installation shall be in accordance with the manufacturer's instructions and CRI 104. Edges of carpet meeting hard surface flooring shall be protected with molding. Installation of the typical carpet is to be reviewed and approved by Contracting Officer before proceeding further with installation.

3.4.1 Broadloom Installation

Broadloom carpet shall be installed direct glue down and shall be smooth, uniform, and secure, with a minimum of seams. Seams shall be uniform, unnoticeable, and treated with a seam adhesive. Side seams shall be run toward the light where practical and where such layout does not increase the number of seams. Breadths shall be installed parallel, with carpet pile in the same direction. Patterns shall be accurately matched. Cutouts, as at door jambs, columns and ducts shall be neatly cut and fitted securely. Seams at doorways shall be located parallel to and centered directly under doors. Seams shall not be made perpendicular to doors or at pivot points. Seams at changes in directions of corridors shall follow the wall line parallel to the carpet direction. Corridors with widths less than (6 feet) shall have the carpet laid lengthwise down the corridors.

3.5 CLEANING AND PROTECTION

3.5.1 Cleaning

After installation of the carpet, debris, scraps, and other foreign matter shall be removed. Soiled spots and adhesive shall be removed from the face of the carpet with appropriate spot remover. Protruding face yarn shall be cut off and removed. Carpet shall be vacuumed clean.

3.5.2 Protection

The installed carpet shall be protected from soiling and damage with heavy, reinforced, nonstaining kraft paper, plywood, or hardboard sheets. Edges of kraft paper protection shall be lapped and secured to provide a continuous cover. Traffic shall be restricted for at least 45 hours. Protective covering shall be removed when directed by the Contracting Officer.

3.6 REMNANTS

Remnants remaining from the installation, consisting of scrap pieces more than (2 feet) in dimension with more than)6 square feet) total, shall be provided. Non-retained scraps shall be removed from site.

-- End of Section --

SECTION TABLE OF CONTENTS

DIVISION 09 - FINISHES

SECTION 09900

PAINTING, GENERAL

07/92

PART 1 GENERAL

1.1 REFERENCES
1.2 SUBMITTALS
1.3 PACKAGING, LABELING, AND STORING
1.4 APPROVAL OF MATERIALS
1.5 ENVIRONMENTAL CONDITIONS
1.6 SAFETY AND HEALTH
1.6.1 Worker Exposures
1.6.2 Toxic Compounds
1.6.3 Training
1.6.4 Coordination

PART 2 PRODUCTS

2.1 PAINT
2.1.1 Colors and Tints
2.1.2 Mildewcide and Insecticide
2.1.3 Lead
2.1.4 Chromium
2.1.5 Volatile Organic Compound (VOC) Content

PART 3 EXECUTION

3.1 PROTECTION OF AREAS NOT TO BE PAINTED
3.2 SURFACE PREPARATION
3.2.1 Concrete, Stucco and Masonry Surfaces
3.2.2 Ferrous Surfaces
3.2.3 Nonferrous Metallic Surfaces
3.2.4 Gypsum Board Surfaces
3.2.5 Mastic-Type Surfaces
3.2.6 Plaster Surfaces
3.2.7 Wood Surfaces
3.2.7.1 Interior Wood Stain
3.3 MIXING AND THINNING
3.3.1 Cement-Emulsion Filler Coat
3.3.2 Two-Component Systems
3.4 APPLICATION
3.4.1 Ventilation
3.4.2 Respirators
3.4.3 First Coat
3.4.4 Timing
3.4.5 Stains
3.4.6 Fillers
3.4.6.1 Cement-Emulsion Filler
3.4.6.2 Latex Filler

3.4.7 Textured Coating
3.4.8 Ferrous-Metal Primer
3.5 PIPE COLOR CODE MARKING
3.6 Not Used
3.7 NotUsed
3.8 SURFACES NOT TO BE PAINTED
3.9 CLEANING
3.10 PAINTING SCHEDULES

-- End of Section Table of Contents --

SECTION 09900

PAINTING, GENERAL
07/92

PART 1 GENERAL

1.1 REFERENCES

The publications listed below form a part of this specification to the extent referenced. The publications are referred to in the text by basic designation only.

AMERICAN CONFERENCE OF GOVERNMENTAL INDUSTRIAL HYGIENISTS (ACGIH)

ACGIH-02	(1996) Threshold Limit Values for Chemical Substances and Physical Agents and Biological Exposure Indices

AMERICAN SOCIETY FOR TESTING AND MATERIALS (ASTM)

ASTM D 3273	(1994) Resistance to Growth of Mold on the Surface of Interior Coating in an Environmental Chamber
ASTM D 3274	(1995) Evaluating Degree of Surface Disfigurement of Paint Films by Microbial (Fungal or Algal) Growth or Soil and Dirt Accumulation
ASTM D 4258	(1988; R 1992) Surface Cleaning Concrete for Coating

COMMERCIAL ITEM DESCRIPTIONS (CID)

CID A-A-1500	(Rev A) Sealer, Surface (Latex Block Filler)
CID A-A-1788	(Basic) Varnish, Oil: Interior
CID A-A-2246	(Rev A) Paint, Latex (Gloss, Interior)
CID A-A-2247	(Basic) Paint, Latex (Semigloss, Interior)
CID A-A-2542	(Basic) Sealer, Terrazzo and Concrete Floors, Waterbased
CID A-A-2962	(Basic) Enamel, Alkyd
CID A-A-2994	(Basic) Primer Coating, Interior, for Walls and Wood

FEDERAL SPECIFICATIONS (FS)

FS TT-C-555	(Rev B; Am 1) Coating, Textured (for Interior and Exterior Masonry Surfaces)

FS TT-E-2784	(Rev A) Enamel (Acrylic-Emulsion, Exterior Gloss and Semigloss) (Metric)

STEEL STRUCTURES PAINTING COUNCIL (SSPC)

SSPC Paint 5	(1995) Zinc Dust, Zinc Oxide and Phenolic Varnish Paint
SSPC Paint 23	(1982) Latex Primer for Steel surfaces
SSPC Paint 25	(1991) Red Iron Oxide, Zinc Oxide, Raw Linseed Oil and Alkyd Primer (Without Lead and Chromate Pigments)
SSPC SP 1	(1982) Solvent Cleaning
SSPC SP 2	(1995) Hand Tool Cleaning
SSPC SP 3	(1995) Power Tool Cleaning
SSPC SP 7	(1994) Brush-Off Blast Cleaning

1.2 SUBMITTALS

Government approval is required for submittals with a "GA" designation; submittals having an "FIO" designation are for information only. The following shall be submitted in accordance with Section 01330 SUBMITTAL PROCEDURES:

SD-01 Data

Paint; FIO.

The names, quantity represented, and intended use for the proprietary brands of materials proposed to be substituted for the specified materials regardless of quantities in states where VOC content limitations apply.

SD-06 Instructions

Application; FIO.

Manufacturer's current printed product description, material safety data sheets (MSDS) and technical data sheets for each coating system. Detailed mixing, thinning and application instructions, minimum and maximum application temperature, and curing and drying times between coats for epoxy, moisture-curing polyurethane, and liquid glaze coatings. Detailed application instructions for textured coatings shall be provided.

SD-14 Color Samples

Paint; GA1.

Two painted samples, minimum 200 x 200 mm (8 x 8 inch) illustrated selected colors and sheen for each color and system selected. Submit on stiff paper backed material. For stains, varnishes and similar transparent coatings, apply finishes on identical type of materials to which they will be applied on job.

1.3 PACKAGING, LABELING, AND STORING

Paints shall be in sealed containers that legibly show the designated name, formula or specification number, batch number, color, quantity, date of manufacture, manufacturer's formulation number, manufacturer's directions including any warnings and special precautions, and name of manufacturer. Pigmented paints shall be furnished in containers not larger than (5 gallons). Paints and thinner shall be stored in accordance with the manufacturer's written directions and as a minimum stored off the ground, under cover, with sufficient ventilation to prevent the buildup of flammable vapors and at temperatures between (40 and 95 degrees F). Paints shall be stored on the project site or segregated at the source of supply sufficiently in advance of need to allow 30 days for testing.

1.4 APPROVAL OF MATERIALS

When samples are tested, approval of materials will be based on tests of the samples; otherwise, materials will be approved based on test reports furnished with them. If materials are approved based on test reports furnished, samples will be retained by the Government for testing should the materials appear defective during or after application. In addition to any other remedies under the contract the cost of retesting defective materials will be at the Contractor's expense.

1.5 ENVIRONMENTAL CONDITIONS

Unless otherwise recommended by the paint manufacturer, the ambient temperature shall be between (45 and 95 degrees F) when applying coatings other than water-thinned, epoxy, and moisture-curing polyurethane coatings. Water-thinned coatings shall be applied only when ambient temperature is between (50 and 90 degrees F). Epoxy, and moisture-curing polyurethane coatings shall be applied only within the minimum and maximum temperatures recommended by the coating manufacturer. Moisture-curing polyurethane shall not be applied when the relative humidity is below 30 percent.

1.6 SAFETY AND HEALTH

Work shall comply with applicable Federal, State, and local laws and regulations, and with the ACCIDENT PREVENTION PLAN, including the Activity Hazard Analysis as specified in the CONTRACT CLAUSES. The Activity Hazard Analysis shall include analyses of the potential impact of painting operations on painting personnel and on others involved in and adjacent to the work zone.

1.6.1 Worker Exposures

Exposure of workers to hazardous chemical substances shall not exceed limits established by ACGIH-02, or as required by a more stringent applicable regulation.

1.6.2 Toxic Compounds

Toxic products having ineffective physiological warning properties, such as no or low odor or irritation levels, shall not be used unless approved by the Contracting Officer.

1.6.3 Training

Workers having access to an affected work area shall be informed of the contents of the applicable material data safety sheets (MDSS) and shall be

informed of potential health and safety hazard and protective controls associated with materials used on the project. An affected work area is one which may receive mists and odors from the painting operations. Workers involved in preparation, painting and clean-up shall be trained in the safe handling and application, and the exposure limit, for each material which the worker will use in the project. Personnel having a need to use respirators and masks shall be instructed in the use and maintenance of such equipment.

1.6.4 Coordination

Work shall be coordinated to minimize exposure of building occupants, other Contractor personnel, and visitors to mists and odors from preparation, painting and clean-up operations.

PART 2 PRODUCTS

2.1 PAINT

The term "paint" as used herein includes emulsions, enamels, paints, stains, varnishes, sealers, cement-emulsion filler, and other coatings, whether used as prime, intermediate, or finish coat. Paint shall conform to the requirements listed in the painting schedules at the end of this section, except when the required amount of a material of a particular batch is (50 gallons) or less, an approved first-line proprietary paint material with similar intended formulation, usage and color to that specified may be used. Additional requirements are as follows:

2.1.1 Colors and Tints

Colors shall be as selected from manufacturer's standard colors, as indicated. Manufacturer's standard color is for identification of color only. Tinting of epoxy and urethane paints shall be done by the manufacturer. Stains shall conform in shade to manufacturer's standard color. The color of the undercoats shall vary slightly from the color of the next coat.

2.1.2 Mildewcide and Insecticide

Paint specified for all coats applied to fabrics and vapor barrier jackets over insulation and surfaces in mechanical area shall contain a mildewcide that will not adversely affect the color, texture, or durability of the coating. The mildewcide shall be incorporated into the paint by the manufacturer and shall attain a surface disfigurement rating of 8 or greater when tested in accordance with ASTM D 3273 and evaluated in accordance with ASTM D 3274. Mercurial mildewcide shall not be used in interior paint. Insecticides shall not be used in paint.

2.1.3 Lead

Paints containing lead in excess of 0.06 percent by weight of the total nonvolatile content (calculated as lead metal) shall not be used.

2.1.4 Chromium

Paints containing zinc chromate or strontium chromate pigments shall not be used.

2.1.5 Volatile Organic Compound (VOC) Content

Paints shall comply with applicable federal, state and local laws enacted to insure compliance with Federal Clean Air Standards and shall conform to the restrictions of the local air pollution control authority.

PART 3 EXECUTION

3.1 PROTECTION OF AREAS NOT TO BE PAINTED

Items not to be painted which are in contact with or adjacent to painted surfaces shall be removed or protected prior to surface preparation and painting operations. Items removed prior to painting shall be replaced when painting is completed. Following completion of painting, workmen skilled in the trades involved shall reinstall removed items. Surfaces contaminated by coating materials shall be restored to original condition.

3.2 SURFACE PREPARATION

Surfaces to be painted shall be clean and free of foreign matter before application of paint or surface treatments. Oil and grease shall be removed prior to mechanical cleaning. Cleaning shall be programmed so that dust and other contaminants will not fall on wet, newly painted surfaces. Exposed ferrous metals such as nail heads on or in contact with surfaces to be painted with water-thinned paints, shall be spot-primmed with a suitable corrosion-inhibitive primer capable of preventing flash rusting and compatible with the coating specified for the adjacent areas.

3.2.1 Concrete, Stucco and Masonry Surfaces

Concrete, stucco and masonry surfaces shall be allowed to dry at least 30 days before painting, except concrete slab on grade which shall be allowed to cure 90 days before painting. Surfaces shall be cleaned in accordance with ASTM D 4258. Glaze, efflorescence, laitance, dirt, grease, oil, asphalt, surface deposits of free iron and other foreign matter shall be removed prior to painting. Surfaces to receive polyurethane or epoxy coatings shall be acid-etched or mechanically abraded as specified by the coating manufacturer, rinsed with water, allowed to dry, and treated with the manufacturer's recommended conditioner prior to application of the first coat.

3.2.2 Ferrous Surfaces

Ferrous surfaces including those that have been shop-coated, shall be solvent-cleaned or detergent-washed in accordance with SSPC SP 1. Surfaces that contain loose rust, loose mill scale, and other foreign substances shall be cleaned mechanically with hand tools according to SSPC SP 2, power tools according to SSPC SP 3 or by sandblasting according to SSPC SP 7. Shop-coated ferrous surfaces shall be protected from corrosion by treating and touching up corroded areas immediately upon detection.

3.2.3 Nonferrous Metallic Surfaces

Galvanized, aluminum and aluminum-alloy, lead, copper, and other nonferrous metal surfaces shall be solvent-cleaned or detergent-washed in accordance with SSPC SP 1.

3.2.4 Gypsum Board Surfaces

Gypsum board surfaces shall be dry and shall have all loose dirt and dust

removed by brushing with a soft brush, rubbing with a cloth, or vacuum-cleaning prior to application of the first-coat material. A damp cloth or sponge may be used if paint will be water-based.

3.2.5 Mastic-Type Surfaces

Mastic-type surfaces shall be prepared by removing foreign material.

3.2.6 Plaster Surfaces

Plaster shall age at least 30 days before painting. Plaster shall be clean and free from loose matter and shall have an instrument-measured moisture content not exceeding 8 percent.

3.2.7 Wood Surfaces

Wood surfaces shall be cleaned of foreign matter. Moisture content of the wood shall not exceed 12 percent as measured by a moisture meter, unless otherwise authorized. Wood surfaces adjacent to surfaces to receive water-thinned paints shall be primed and/or touched up before applying water-thinned paints. Small, dry seasoned knots shall be scraped, cleaned, and given a thin coat of commercial knot sealer, before application of the priming coat. Pitch on large, open, unseasoned knots and all other beads or streaks of pitch shall be scraped off, or, if it is still soft, removed with mineral spirits or turpentine, and the resinous area shall be thinly coated with knot sealer. Finishing nails shall be set, and all holes and surface imperfections shall be primed. After priming, holes and imperfections in finish surfaces shall be filled with putty or plastic wood filler, colored to match the finish coat if natural finish is required, allowed to dry, and sanded smooth. Putty or wood filler shall be compatible with subsequent coatings.

3.2.7.1 Interior Wood Stain

Interior wood surfaces to receive stain shall be sanded. Oak and other open-grain wood to receive stain shall be given a coat of wood filler not less than 8 hours before the application of stain; excess filler shall be removed and the surface sanded smooth.

3.3 MIXING AND THINNING

When thinning is approved as necessary to suit surface, temperature, weather conditions, or application methods, paints may be thinned in accordance with the manufacturer's directions. When thinning is allowed, paints shall be thinned immediately prior to application with not more than (1 pint) of suitable thinner per (gallon). The use of thinner shall not relieve the Contractor from obtaining complete hiding, full film thickness, or required gloss. Thinning shall not cause the paint to exceed limits on volatile organic compounds. Paints of different manufacturers shall not be mixed.

3.3.1 Cement-Emulsion Filler Coat

Cement and aggregate shall be dry-mixed so that uniform distribution and intermixing are obtained. Mixing liquid and one-half of the total amount of water shall be premixed and added gradually to the white portland cement and aggregate with constant stirring until a thick, smooth material is obtained. Emulsion paint shall then be added to the mixture and stirred until uniformity is obtained. The blend shall have a thick, creamy

consistency. The remainder of the water shall be added if necessary to obtain a material with adequate application properties. Blending resin emulsion or emulsion paint with any other component shall be done with caution; too rapid an agitation will cause air entrapment and foaming.

3.3.2 Two-Component Systems

Two-component systems shall be mixed in accordance with manufacturer's instructions. Any thinning of the first coat to ensure proper penetration and sealing shall be as recommended by the manufacturer for each type of substrate.

3.4 APPLICATION

Painting practices shall comply with applicable federal, state and local laws enacted to insure compliance with Federal Clean Air Standards. Unless otherwise specified or recommended by the paint manufacturer, paint may be applied by brush, roller, or spray. At the time of application, paint shall show no signs of deterioration. Uniform suspension of pigments shall be maintained during application. Each coat of paint shall be applied so dry film shall be of uniform thickness and free from runs, drops, ridges, waves, pinholes or other voids, laps, brush marks, and variations in color, texture, and finish. Hiding shall be complete. Rollers for applying paints and enamels shall be of a type designed for the coating to be applied and the surface to be coated. Special attention shall be given to insure that all edges, corners, crevices, welds, and rivets receive a film thickness equal to that of adjacent painted surfaces. Paints, except water-thinned types, shall be applied only to surfaces that are completely free of moisture as determined by sight or touch.

3.4.1 Ventilation

Affected areas shall be ventilated during paint application so that workers exposure to chemical substances shall not exceed limits as established by ACGIH-02, or as required by a more stringent applicable regulation. Interior work zones having a volume of (10,000 cubic feet) or less shall be ventilated at a minimum of 2 air exchanges per hour. Ventilation in larger work zones shall be maintained by means of mechanical exhaust. Solvent vapors shall be exhausted outdoors, away from air intakes and workers. Return air inlets in the work zone shall be temporarily sealed before start of work until the coatings have dried.

3.4.2 Respirators

Operators and personnel in the vicinity of operating paint sprayers shall wear respirators.

3.4.3 First Coat

The first coat on plaster, gypsum wallboard, and other surfaces shall include repeated touching up of suction spots or overall application of primer or sealer to produce uniform color and gloss. Excess sealer shall be wiped off after each application. The first coat on both faces of wood doors shall be applied at essentially the same time. Glazed doors and sashes shall be given the specified coating system within 3 weeks of the time they are glazed, but not before the glazing material has set; paint shall overlay glass about (70 mils) all around. Each varnish coat shall be sanded lightly prior to application of subsequent coats.

3.4.4 Timing

Surfaces that have been cleaned, pretreated, and otherwise prepared for painting shall be given a coat of the specified first coat as soon as practical after such pretreatment has been completed, but prior to any deterioration of the prepared surface. Sufficient time shall elapse between successive coats to permit proper drying. This period shall be modified as necessary to suit weather conditions. Oil-based or oleoresinous solvent-type paints shall be considered dry for recoating when the paint feels firm, does not deform or feel sticky under moderate pressure of the thumb, and the application of another coat of paint does not cause the undercoat to lift or lose adhesion. Manufacturer's instructions for application, curing and drying time between coats of two-component systems shall be followed.

3.4.5 Stains

Stain shall be applied at the rate specified in the manufacturer's printed directions. Oil-type stain shall be applied by brushing with the grain for the full length of the board or course of siding.

3.4.6 Fillers

Concrete and masonry surface voids shall be filled; however, surface irregularities need not be completely filled. The dried filler shall be uniform and free of pinholes. Filler shall not be applied over caulking compound.

3.4.6.1 Cement-Emulsion Filler

Immediately before filler application, surfaces shall be dampened uniformly and thoroughly, with no free surface water visible, by several applications of potable water with a fog spray, allowing time between the sprayings for water to be absorbed. Cement-emulsion filler shall be scrubbed into the surface vigorously with a stiff-bristled brush having tampico or palmyra bristles not longer than (2-1/2 inches). At least 24 hours shall elapse before applying exterior emulsion paint over cement-emulsion filler. When the ambient temperature is over (85 degrees F), cement-emulsion filler surfaces shall be dampened lightly with a fog spray of potable water immediately prior to application of the subsequent paint coat.

3.4.6.2 Latex Filler

Latex filler, CID A-A-1500, shall be applied according to the manufacturer's instructions. Surface voids shall be filled and excess filler shall be removed from the surface with a rubber squeegee. The filler shall be allowed to dry the length of time specified by the manufacturer prior to applying successive coats of paint.

3.4.7 Textured Coating

Application of textured coating, FS TT-C-555, shall be as specified in the manufacturer's printed directions.

3.4.8 Ferrous-Metal Primer

Primer for ferrous-metal shall be applied to ferrous surfaces to receive paint other than asphalt varnish prior to deterioration of the prepared surface. The semitransparent film applied to some pipes and tubing at the

mill is not to be considered a shop coat, but shall be overcoated with the specified ferrous-metal primer prior to application of finish coats.

3.5 PIPE COLOR CODE MARKING

Pipes in exposed areas and in accessible pipe spaces shall be provided with color band and titles adjacent to all valves, except those provided at plumbing fixtures, at not more than (40 foot) spacing on straight pipe runs, adjacent to change in direction, and on both sides where pipes pass through walls or floors. Color code marking shall be of the color listed in TABLE I and the size listed in TABLE II. The arrows shall be installed adjacent to each band to indicate the direction of flow in the pipe. The legends shall be printed in upper-case black letters as listed in TABLE I. Letter sizes shall be as listed in TABLE II. Marking shall be painted or applied using colored, pressure-sensitive adhesive markers of standard manufacture. Paint shall be as specified for insulated and uninsulated piping.

TABLE I. COLOR CODES FOR MARKING PIPE

Material	Band	Letters and Arrow*	Legend
Cold water (potable)	Green	White	POTABLE WATER
Fire protection water	Red	White	FIRE PR. WATER
Hot water (domestic)	Green	White	H.W.
Hot water recirculating (domestic)	Green	White	H.W.R.
High temp. water supply	Yellow	Black	H.T.W.S.
High temp. water return	Yellow	Black	H.T.W.R.
Boiler feed water	Yellow	Black	B.F.
Low temp. water supply (heating)	Yellow	Black	L.T.W.S.
Low temp. water return (heating)	Yellow	Black	L.T.W.R.
Condenser water supply	Green	White	COND. W.S.
Condenser water return	Green	White	COND. W.R.
Chilled water supply	Green	White	C.H.W.S.
Chilled water return	Green	White	C.H.W.R.
Treated water	Yellow	Black	TR. WATER
Chemical feed	Yellow	Black	CH. FEED
Compressed air	Yellow	Black	COMP. AIR
Natural gas	Blue	White	NAT. GAS
Freon	Blue	White	FREON
Fuel oil	Yellow	Black	FUEL OIL
Steam	Yellow	Black	STM.
Condensate	Yellow	Black	COND.

(

TABLE II. COLOR CODE MARKING SIZES

Outside Diameter of Pipe Covering (Inches)	Length of Color Band (inches)	Arrow Length x Width (Inches)	Size of Legend Letters and Numerals (Inches)
Less than 1-1/2	8	8 x 2-1/4	1/2
1-1/2 to 2-3/8	8	8 x 2-1/4	3/4
2-1/2 to 7-7/8	12	8 x 2-1/4	1-1/4
8 to 10	24	12 x 4-1/2	2-1/2
Over 10	32	12 x 4-1/2	3-1/2)

3.6 Not Used

3.7 NotUsed

3.8 SURFACES NOT TO BE PAINTED

Surfaces in the following areas shall not to be painted: elevator shafts, unexposed interior ferrous surfaces, and jacketing over insulation pipes in unexposed locations that do not require color coding.. In addition, surfaces of hardware, fittings, and other factory finished items shall not be painted.

3.9 CLEANING

Cloths, cotton waste and other debris that might constitute a fire hazard shall be placed in closed metal containers and removed at the end of each day. Upon completion of the work, staging, scaffolding, and containers shall be removed from the site or destroyed in an approved manner. Paint and other deposits on adjacent surfaces shall be removed and the entire job left clean and acceptable.

3.10 PAINTING SCHEDULES

The following painting schedules identify the surfaces to be painted and prescribe the paint to be used and the number of coats of paint to be applied. Contractor options are indicated by ------or------ between optional systems or coats.

EXTERIOR PAINTING SCHEDULE

Ferrous metal unless otherwise specified	SSPC Paint 5	CID A-A-2962 Type I Class B Grade C	CID A-A-2962 Type 1 Class B Grade C
	SSPC Paint 25	CID A-A-2962 Type I Class B Grade C	CID A-A-2962 Type 1 Class B Grade C
	SSPC Paint 23	FS TT-E-2784 Type [I] [II]	FS TT-E-2784 Type [I] [II]

INTERIOR PAINTING SCHEDULE

Gypsum board, concrete, and concrete masonry units, unless otherwise specified.	CID A-A-2994	CID A-A-2246 Type II, Class 3	None
Concrete: Sealer	CID A-A-2542	None	None

INTERIOR PAINTING SCHEDULE

for floors requiring dust reduction	Type I		
Plaster and gypsum board: in Guest bathrooms, and public restrooms.	CID A-A-2994	FS TT-E-2784 Type II, Class 2	None
Concrete masonry units, plaster, and gypsum board: for walls in stairwells.	CID A-A-1500	CID A-A-2994 Type II, Class 3	CID A-A-2247
Ferrous Metal unless otherwise specified	SSPC Paint 25 (Factory applied)	CID A-A-2962 Type II Class B Grade C	CID A-A-2962 Type II Class B Grade C
Ferrous metal factory-primed mechanical and electrical equipment.	Two coats of paint as recommended by the equipment manufacturer		None
Wood: stain and varnish finishes as follows: wood top rail	Commercially available stain	CID A-A-1788 Type Satin Class I In addition a fourth coat of CID A-A-1788 Type Satin Class I	CID A-A-1788 Type Satin Class I
Ferrous Metal: Convector enclosures, electrical conduit runs: metallic tubing uninsulated ducts and pipes, pipe hangers, louvers, grilles, and air outlets, in areas having painted adjacent surfaces.	SSPC Paint 23	None	None

INTERIOR PAINTING SCHEDULE

Aluminum and Galvanized Surface Metal:			
Convector enclosures, electrical conduit runs metallic tubing uninsulated ducts and pipes, pipe hangers, louvers, grilles, and air outlets, in areas having painted adjacent surfaces.	FS TT-E-2784	CID A-A-2247	CID A-A-2247
Facing of vapor barrier jackets of presized or adhesive finished cloth cover insulation on pipes, ducts, and equipment in mechanical rooms.	Two coats of paint to match adjacent areas		None

-- End of Section --

SECTION TABLE OF CONTENTS

DIVISION 09 - FINISHES

SECTION 09915

COLOR SCHEDULE

06/93

PART 1 GENERAL

1.1 GENERAL
1.2 SUBMITTALS Not Used

PART 2 PRODUCTS

2.1 REFERENCE TO MANUFACTURER'S COLOR
2.2 COLOR SCHEDULE
2.2.1 Exterior Walls
2.2.2 Exterior Trim
2.2.3 Exterior Roof
2.2.4 Interior Floor Finishes
2.2.5 Interior Base Finishes
2.2.6 Interior Wall Finishes
2.2.7 Interior Ceiling Finishes
2.2.8 Interior Trim
2.2.9 Interior Window Treatment
2.2.10 Interior Miscellaneous

PART 3 EXECUTION (Not Applicable)

-- End of Section Table of Contents --

SECTION 09915

COLOR SCHEDULE
06/93

PART 1 GENERAL

1.1 GENERAL

This section covers only the color of the exterior and interior materials and products that are exposed to view in the finished construction. The word "color" as used herein includes surface color and pattern. Requirements for quality and method of installation are covered in other appropriate sections of the specifications. Specific locations where the various materials are required are shown on the drawings. Items not designated for color in this section may be specified in other sections. When color is not designated for items, the Contractor shall propose a color for approval.

1.2 SUBMITTALS Not Used

PART 2 PRODUCTS

2.1 REFERENCE TO MANUFACTURER'S COLOR

Where color is shown as being specific to one manufacturer, an equivalent color by another manufacturer may be submitted for approval. Manufacturers and materials specified are not intended to limit the selection of equal colors from other manufacturers.

2.2 COLOR SCHEDULE

The color schedule lists the colors, patterns and textures required for exterior and interior finishes, including both factory applied and field applied colors.

2.2.1 Exterior Walls

Exterior wall colors shall apply to exterior wall surfaces including recesses at entrances and projecting vestibules. Conduit shall be painted to closely match the adjacent surface color. Wall color shall be provided to match the colors listed below.

a. Brick: Blend of 60% Dark Ironspot Velour and 40% Medium Ironspot Velour by Endicott Brick Company.

b. Mortar: Color No. SPM 401 by SpecMix.

c. Paint: Not Used.

d. Concrete Masonry Units (Integrally Colored): Not Used.

e. Composite Metal Panels, Hardware, and Associated Trim:
CMP-1: Alusuisse Composites, "Platinum" (1-30-d)
CMP-2: PPG Industries, Duranar coating #UC5173XL "Pewter"..

f. Ribbed Metal Siding:
RMS: PPG Industries, Duranar coating #UC52003 "Boysenberry".

g. Precast Concrete: Integral "buff" color which matches the precast installed on the existing Phase One portion of the building.

h. Glass and Glazing: Clear (no tint).

2.2.2 Exterior Trim

Exterior trim shall be provided to match the colors listed below.

a. Hollow Metal Doors and Door Frames: Paint color to match precast concrete panels.

b. Windows (mullion, muntin, sash, trim, and sill): Clear anodized aluminum.

c. Wood Stain: Not used.

d. Fascia: Not used.

e. PTAC Unit Louvers, and Flashings: Clear anodized aluminum.

f. Guardrails: Clear anodized aluminum..

g. Soffits and Ceilings: Not used.

h. Signage: Not used.

i. Access Panels: Not used.

j. Caulking and Sealants: Color varies to match adjacent surface.

l. Mechanical Louvers: Louver type L-17 to match Industrial Louver's standard color "Charcoal". Louver types L-18, L-19, and L-20 to match Industrial Louver's standard color "Rawhide". Narrow profile louvers below windows to have clear anodized aluminum finish.

m. Aluminum Channel: Clear anodized aluminum.

2.2.3 Exterior Roof

Roof color shall apply to exterior roof surfaces including sheet metal flashings and copings, roof trim, and similar items. Roof color shall be provided to match the colors listed below.

a. Metal: Not used.

b. Shingles: Not used.

c. EPDM: Black.

2.2.4 Interior Floor Finishes

Flooring materials shall be provided to match the colors listed below.

a. Carpet:
CPT-1: Not used.

CPT-2: Color 418 (Greek) in "Lineage" carpet by Lees (corridors & multi-purpose room)to match Phase One and Two.
CPT-3: Color 58750 (Java)in "Cliffside" (Stlye #50558),by Shaw Hospitality Group (guest rooms) to match Phase One and Two.
CPT-4: Durkan "Petit Point" in color PT 5209, "Flax" (elevator lobby accent)to match Phase One and Two..

b. Carpet Tile: Not used.

c. Vinyl Composition Tile:
VCT-1: Color 2026 (Parchment Multi) in "Expressions" by Tarkett.

d. Sheet Vinyl: Not Used

e. Raised Pattern Rubber Floor at Stair Landings: Color to be "0749 Stone Grey" in Norament 920S.

f. Stair Treads, and Risers: Refer to (e) above.

g. Quarry Tile: Not used.

h. Ceramic Tile:
CT-2: Color to be DK-1440 (Honey) by Dal-Tile.

i. Porcelain Tile: T-1: Color to be RF1212G (Reflections) in "Rustic" by American Florim.

j. Grout:
Color to be "915 Light Smoke" by TEC for Lobby (T-1).
Color to be "984 Almond" by TEC for Guest Room Bathroom Floor (CT-2).

l. Wood: Stain to match Formica 7008-43 Acajou Mahogony.

m. Static [Dissipative] [Conductive] Tile: Not used.

n. Concrete: Clear sealer (where noted on Room Finish Schedule).

2.2.5 Interior Base Finishes

Base materials shall be provided to match the colors listed below.

a. Resilient Base:
VB-1: Color to be #29 "Moon Rock" by Johnsonite.
VB-2: Not Used

b. Quarry Tile: Not used.

c. Ceramic Tile: Refer to CT-2 (2.2.4h) description.

d. Porcelain Tile: Refer to T-1 (2.2.4i) above.

e. Grout: Refer to (2.2.4j) above.

2.2.6 Interior Wall Finishes

Interior wall color shall apply to the entire wall surface, including reveals, vertical furred spaces, grilles, diffusers, electrical and access panels, and piping and conduit adjacent to wall surfaces unless otherwise

specified. Items not specified in other paragraphs shall be painted to match adjacent wall surface. Wall materials shall be provided to match the colors listed below.

a. Paint:
PT-1: Sherwin Williams, "Fresco Cream" (#SW100).
PT-2: Sherwin Williams "Chenille White" (#SW1102) in eggshell finish.
PT-3: Sherwin Williams "Sanderlings (#SW2030) in eggshell finish.

PT-4: Sherwin Williams, "Wickerwork" (#SW0010) in eggshell finish.
PT-5: Not used.
PT-6: Sherwin Williams, "Kaffe Tan" (SW#1111) in eggshell finish.
PT-7: Sherwin Williams, "Irish Cream" (#SW1115) in semigloss finish.

See Room Finish Schedule for Locations.

b. Vinyl Wall Covering: Not used.

c. Fabric Wall Covering: Not used.

d. Ceramic Tile:
CT-3: Color to be D-727 (Shell) by Dal-Tile.

e. Ceramic Tile Grout: Color to be "943 Victorian White" by TEC.

f. Acoustical Wall Covering: Not used.

g. Brick: Not used.

h. Metal Liner Panels: Not used.

i. Glazed Structural Units: Not used.

j. Prefaced Concrete Masonry Units: Not used.

k. Mortar: Not used.

l. Columns/Covers: Color to be PT-2.

m. Cultured Marble: Color to be A-40 "Blended Warm White" in matte finsh.

2.2.7 Interior Ceiling Finishes

Ceiling colors shall apply to ceiling surfaces including soffits, furred down areas, grilles, diffusers, registers, and access panels. Ceiling color shall also apply to joist, underside of roof deck, and conduit and piping where joists and deck are exposed and required to be painted. Ceiling materials shall be provided to match the colors listed below.

a. Acoustical Tile and Grid: White.

b. Paint:
PT-2: Sherwin Williams, "Chenille White" (#SW1102) in flat finish.
PT-8: Sherwin Williams, "Pure White" (#SW1004) in flat finish.

c. Structural Framing: Not used.

d. Metal Deck: Not used.

e. Ceiling Spray Texture: White.

2.2.8 Interior Trim

Interior trim shall be provided to match the colors listed below.

a. Doors: Stain to match Formica 7008-43 Acajou Mahogany.

b. Door Frames: Color to be PT-4 (semi-gloss finish).

c. Windows (mullion, muntin, sash, trim, and stool): Clear anodized aluminum.

d. Window Sills: Color to be Cultured Marble A40 Blended Warm White.

e. Fire Extinguisher Cabinets: Brushed stainless steel.

f. Handrails: Paint color to be PT-2 at Stairs.

g. Ladders: Not Used.

h. Metal Stairs: Color to be PT-2 for metal components.

i. Wood Stain: Wood stain to match color of Formica 7008-43 Acajou Mahogany.

2.2.9 Interior Window Treatment

Window treatments shall be provided to match the colors listed below.

a. Horizontal Blinds: #34 Brushed Aluminum (dust guard) by Riviera.

b. Vertical Blinds: Not used.

c. Integral Blinds: Not used.

d. Drapery Hardware: Not used.

2.2.10 Interior Miscellaneous

Miscellaneous items shall be provided to match the colors listed below.

a. Toilet Partitions and Urinal Screen: Not used.

b. Plastic Laminate:
PL-1: Color to be "Aged Elements" (EM-6-1T) by Nevamar (textured finish). Vertical surfaces in elevator cab.
PL-2: Color to be "Ochre Tempura" (TM-2-1T) by Nevamar (textured finish). Guestroom casework.
PL-3: Color to be "Ivory Essence" (ES-2-1T) by Nevamar (textured finish). Shelving in Linen closets.
PL-4: Not Used.
PL-5: Color to be"Classic Mahogany" (WN021) by Pionite. Guest Suite Chest finish.

c. Signage Message Color (excluding handicapped signage): Color to be "Charcoal Gray" to match Phase Two signage.

d. Signage Background Color (excluding handicapped signage): Color to be "Light Grey" to match Phase Two signage.

e. Lockers: Not used.

f. Operable Partitions: Not used.

g. Corner Guards: Brushed stainless steel.

h. Wall Switch Handles and Standard Receptacle Bodies: Ivory.

i. Electrical Device Cover Plates and Panels: Ivory.

j. Casework: Refer to Drawings and Specification Section 06200.

k. Elevator Floor: To be CPT-2.

l. Elevator Car Walls: To be PL-1.

m. Guardrail: Not used.

n. Recessed Flooring/Mats: Color to be equal to "9305 Espresso" by Pedimat.

o. Recessed Floor Rail/Frame: Clear anodized aluminum.

p. Stone: Not used.

PART 3 EXECUTION (Not Applicable)

-- End of Section --

SECTION TABLE OF CONTENTS

DIVISION 10 - SPECIALTIES

SECTION 10214

EXTERIOR LOUVERS

7/99y

PART 1 GENERAL

1.1 REFERENCES
1.2 SUBMITTALS
1.3 Performance Requirements

PART 2 PRODUCTS

2.1 FIXED EXTRUDED LOUVERS
2.1.1 Standard Louvers (Louver Types L-17, L-18, L-19, L-20)
2.1.2 Narrow Profile Louvers (Louver Types L-1, L1-A, L-34, L-34-A, L-35, and L-39)
2.2 ACCESSORIES
2.2.1 Accessories
2.2.2 Sill Flashing
2.2.3 Blank Off Panels
2.2.3.1 Insulated
2.2.3.2 Blank Off Panels at Narrow Profile Louvers
2.2.4 Screens
2.3 FINISHES
2.3.1 Standard Louver Finish
2.3.2 Narrow Profile Louvers (Typical @ PTAC units)

PART 3 EXECUTION

3.1 INSTALLATION

-- End of Section Table of Contents --

SECTION 10214

EXTERIOR LOUVERS
7/99y

PART 1 GENERAL

1.1 REFERENCES

The publications listed below form a part of this specification to the extent referenced. The publications are referred to in the text by basic designation only.

AIR MOVEMENT CONTROL ASSOCIATION (AMCA)

AMCA 500	(1994) Test Method for Louvers, Dampers, and Shutters

AMERICAN SOCIETY FOR TESTING AND MATERIALS (ASTM)

ASTM B 209	(1996) Aluminum and Aluminum-Alloy Sheet and Plate
ASTM B 209M	(1995) Aluminum and Aluminum-Alloy Sheet and Plate (Metric)
ASTM B 221	(1996) Aluminum and Aluminum-Alloy Extruded Bars, Rods, Wire, Profiles, and Tubes
ASTM B 221M	(1996) Aluminum and Aluminum-Alloy Extruded Bars, Rods, Wire, Profiles, and Tubes (Metric)

1.2 SUBMITTALS

Government approval is required for submittals with a "GA" designation; submittals having an "FIO" designation are for information only. The following shall be submitted in accordance with Section 01330 SUBMITTAL PROCEDURES:

SD-01 Data

Louvers; FIO.

Manufacturer's catalog data describing design characteristics, maximum recommended air velocity, design free area, materials, finishes, and performance characteristics..

SD-04 Drawings

Louvers; GA1.

Drawings showing, in large scale, the louver layout plan, profile of frame and installation details, relationship to adjacent construction, flashing,

blade configuration connections to duct work, bird screens, and percentage of free air opening for each louver type.

1.3 Performance Requirements

Louvers shall be tested in accordance with AMCA 500 and shall bear the AMCA certified ratings seal for both air performance and water penetration when tested at a static pressure drop not exceeding 0.037 kPa (0.15 inches) water.

PART 2 PRODUCTS

2.1 FIXED EXTRUDED LOUVERS

Exterior wall louvers shall be fabricated of extruded aluminum ASTM B 221/ ASTM B 221M 6063 T5 alloy, conforming to ASTM B 209/ASTM B 209M. Louvers shall have continuous, horizontal blades with a mitered and all-welded extruded aluminum channel shape frame and shall provide a rigid and square self-supporting unit. Louver blades shall be fixed type with a 45 degree slope.

2.1.1 Standard Louvers (Louver Types L-17, L-18, L-19, L-20)

Standard profile louvers shall have the following

Frame Depth @ L-17, L-18 &, L-20	100 mm (4 inches)
Frame Depth @ L-19	150 mm (6 inches)
Frame thickness	2.06 mm (0.081 inch)
Blade type	drainable design
Blade thickness	2.06 mm (0.081 inch)
Percent free area	minimum 45%

Louver overall dimensions shall be as indicated on drawings. Furnish with bird screen, standard extended sill and angle clips for mounting at head, jambs and sill. Refer to drawings for louver locations.

2.1.2 Narrow Profile Louvers (Louver Types L-1, L1-A, L-34, L-34-A, L-35, and L-39)

Narrow profile louvers shall have the following

Frame Depth	38 mm (1-1/2 inches)
Frame thickness	1.60 mm (.063 inch)
Blade type	standard design
Blade thickness	1.60 mm (.063 inch)
Percent free area	minimum 45%

Louver overall dimensions shall be as indicated on drawings. Furnish with insect screen, standard extended sill and angle clips for mounting at head, jambs and sill. Refer to drawings for louver locations.

2.2 ACCESSORIES

2.2.1 Accessories

Louver accessories shall include recessed mullions, angle flange and wall anchors for installation in concrete wall back-up.

2.2.2 Sill Flashing

Sill flashing shall be of same material and thickness as louver blade, in

color and finish to match louvers. Provide manufacturer's standard profile in locations shown on drawings.

2.2.3 Blank Off Panels

2.2.3.1 Insulated

Insulated blank off panels shall be 50 mm (2 inches) thick, with rigid insulation core, of same material, finish and color as as louver blades. Secure blank off cover panels to back face (interior) of louver frame. Refer to Drawings for locations and details.

2.2.3.2 Blank Off Panels at Narrow Profile Louvers

Blank off panels shall be of same material, finish and color as louver blades and frame. Secure to back face (interior) of louver frame. Refer to Drawings for locations and details.

2.2.4 Screens

Bird screens shall be of 13 mm (1/2 inch) mesh removable mill finish aluminum bird screens. Insect screens shall be framed aluminum 0.312 mm (0.0123 inch) mesh mill finish insect screens.

2.3 FINISHES

2.3.1 Standard Louver Finish

Exposed surfaces of louvers are to receive a coil-coated 70% Kynar 500 or Hylar 5000 based, two coat polyvinylidene fluoride resin finish in conformance with the general requirements of AAMA 605.2-92. Colors to be as shown in 09915 COLOR SCHEDULE.

2.3.2 Narrow Profile Louvers (Typical @ PTAC units)

Exposed surfaces of louvers shall be finished with anodic coating conforming to AA-M10-C22-A31, clear anodic coating, thick, 204-R1 Natural Color. Finish shall be free of scratches and other blemishes.

PART 3 EXECUTION

3.1 INSTALLATION

Install louvers in accordance with manufacturer's instructions and approved shop drawings. Secure louvers rigid with fasteners to suit substrate materials. Coordinate installation method with application of mechanical work. Install perimeter sealant and backing rod in accordance with Section 07900 JOINT SEALING.

-- End of Section --

SECTION TABLE OF CONTENTS

DIVISION 10 - SPECIALTIES

SECTION 10260

WALL AND CORNER PROTECTION

12/95

PART 1 GENERAL

1.1 REFERENCES
1.2 SUBMITTALS
1.3 DELIVERY AND STORAGE
1.4 WARRANTY

PART 2 PRODUCTS

2.1 GENERAL
2.2 CORNER GUARDS
2.2.1 Not Used
2.2.2 Stainless Steel Corner Guards
2.3 Not Used
2.4 Not Used
2.5 Not Used
2.6 FASTENERS AND ANCHORS
2.7 FINISH
2.7.1 Not Used
2.7.2 Stainless Steel Finish
2.8 ADHESIVES

PART 3 EXECUTION

3.1 INSTALLATION
3.1.1 Corner Guards

-- End of Section Table of Contents --

SECTION 10260

WALL AND CORNER PROTECTION
12/95

PART 1 GENERAL

1.1 REFERENCES

The publications listed below form a part of this specification to the extent referenced. The publications are referred to in the text by basic designation only.

AMERICAN SOCIETY FOR TESTING AND MATERIALS (ASTM)

ASTM A 167	(1996) Stainless and Heat-Resisting Chromium-Nickel Steel Plate, Sheet, and Strip

NATIONAL ASSOCIATION OF ARCHITECTURAL METAL MANUFACTURERS (NAAMM)

NAAMM AMP 500 Manual	(1988) Metal Finishes Manual for Architectural and Metal Products

1.2 SUBMITTALS

Government approval is required for submittals with a "GA" designation; submittals having an "FIO" designation are for information only. The following shall be submitted in accordance with Section 01330 SUBMITTAL PROCEDURES:

SD-01 Data

Corner Guards; FIO.

Manufacturer's descriptive data, catalog cuts, installation instructions, and recommended cleaning instructions.

SD-14 Samples

Finish; FIO.

Manufacturer's standard samples indicating color and texture of materials requiring color and finish selection.

1.3 DELIVERY AND STORAGE

Materials shall be delivered to the project site in manufacturer's original unopened containers with seals unbroken and labels and trademarks intact. Materials shall be kept dry, protected from weather and damage, and stored under cover. Materials shall be stored at approximately (70 degrees F) for at least 48 hours prior to installation.

1.4 WARRANTY

Manufacturer's standard performance guarantees or warranties that extend beyond a 1 year period shall be provided.

PART 2 PRODUCTS

2.1 GENERAL

To the maximum extent possible, corner guards, shall be the standard products of a single manufacturer and shall be furnished as detailed. Drawings show locations of products required.

2.2 CORNER GUARDS

2.2.1 Not Used

2.2.2 Stainless Steel Corner Guards

Stainless steel corner guards shall be fabricated of thick material conforming to ASTM A 167, type 302 or 304. Corner guards shall be high and formed to dimensions of 50 by 50 mm (2 by 2 inch).

2.3 Not Used

2.4 Not Used

2.5 Not Used

2.6 FASTENERS AND ANCHORS

Fasteners and anchors shall be provided for each specific installation as shown.

2.7 FINISH

2.7.1 Not Used

2.7.2 Stainless Steel Finish

Finish for stainless steel shall be in accordance with NAAMM AMP 500 Manual, finish number 4 (brushed).

2.8 ADHESIVES

Adhesive for corner guard material shall be in accordance with manufacturers recommendations.

PART 3 EXECUTION

3.1 INSTALLATION

3.1.1 Corner Guards

Material shall be mounted at location indicated on Drawings in accordance with manufacturer's recommendations.

-- End of Section --

SECTION TABLE OF CONTENTS

DIVISION 10 - SPECIALTIES

SECTION 10440

INTERIOR SIGNAGE

06/98

PART 1 GENERAL

1.1 REFERENCES
1.2 GENERAL
1.2.1 Character Proportions and Heights
1.2.2 Raised and Brailled Characters and Pictorial Symbol Signs (Pictograms)
1.3 SUBMITTALS
1.4 QUALIFICATIONS
1.5 DELIVERY AND STORAGE
1.6 EXTRA STOCK

PART 2 PRODUCTS

2.1 ROOM IDENTIFICATION/DIRECTIONAL SIGNAGE SYSTEM
2.1.1 Standard Room Signs
2.1.2 Not Used
2.1.3 Type of Mounting For Signs
2.1.4 Graphics
2.2 Not Used
2.3 Not Used
2.4 Not Used
2.5 ALUMINUM ALLOY PRODUCTS
2.6 Not Used
2.7 Not Used
2.8 FABRICATION AND MANUFACTURE
2.8.1 Factory Workmanship
2.8.2 Dissimilar Materials
2.9 COLOR, FINISH, AND CONTRAST

PART 3 EXECUTION

3.1 INSTALLATION
3.1.1 Anchorage
3.1.2 Protection and Cleaning

-- End of Section Table of Contents --

SECTION 10440

INTERIOR SIGNAGE
06/98

PART 1 GENERAL

1.1 REFERENCES

The publications listed below form a part of this specification to the extent referenced. The publications are referred to in the text by basic designation only.

AMERICAN NATIONAL STANDARDS INSTITUTE (ANSI)

ANSI Z97.1	(1984; Rev 1994) Safety Performance Specifications and Methods of Test for Safety Glazing Materials Used in Buildings

AMERICAN SOCIETY FOR TESTING AND MATERIALS (ASTM)

ASTM B 209	(1996) Aluminum and Aluminum-Alloy Sheet and Plate
ASTM B 221	(1996) Aluminum and Aluminum-Alloy Extruded Bars, Rods, Wire, Profiles, and Tubes
	(1996) Aluminum and Aluminum-Alloy Extruded Bars, Rods, Wire, Profiles, and Tubes (Metric)

AMERICAN WELDING SOCIETY (AWS)

AWS D1.2	(1990) Structural Welding Code - Aluminum

1.2 GENERAL

Interior signage shall be of the design, detail, sizes, types, and message content shown on the drawings, shall conform to the requirements specified, and shall be provided at the locations indicated. Signs shall be complete with lettering, framing as detailed, and related components for a complete installation.

1.2.1 Character Proportions and Heights

Letters and numbers on indicated signs in handicapped-accessible buildings, which do not designate permanent rooms or spaces, shall have a width-to-height ratio between 3:5 and 1:1 and a stroke-width-to-height ratio between 1:5 and 1:10. Characters and numbers on indicated signs shall be sized according to the viewing distance from which they are to be read. The minimum height is measured using an upper case letter "X". Lower case characters are permitted. Suspended or projected overhead signs shall have a minimum character height of .

1.2.2 Raised and Brailled Characters and Pictorial Symbol Signs (Pictograms)

Letters and numbers on indicated signs which designate permanent rooms and spaces in handicapped-accessible buildings shall be raised upper case, sans serif or simple serif type and shall be accompanied with Grade 2 Braille. Raised characters shall be at least in height, but no higher than . Pictograms shall be accompanied by the equivalent verbal description placed directly below the pictogram. The border dimension of the pictogram shall be minimum in height. Indicated accessible facilities shall use the international symbol of accessibility.

1.3 SUBMITTALS

Government approval is required for submittals with a "GA" designation; submittals having an "FIO" designation are for information only. The following shall be submitted in accordance with Section 01330 SUBMITTAL PROCEDURES:

SD-01 Data

Interior Signage; GA1.

Manufacturer's descriptive data, catalogs cuts, installation and cleaning instructions.

SD-04 Drawings

Interior Signage; GA1.

Drawings showing elevations of each type of sign, dimensions, details and methods of mounting or anchoring, shape and thickness of materials, and details of construction. A schedule showing the location, each sign type, and message shall be included.

SD-14 Samples

Interior Signage; GA1.

One sample of each of the following sign types showing typical quality and workmanship. The samples may be installed in the work, provided each sample is identified and location recorded.

a. Directional sign.

b. Door identification sign.

Two samples of manufacturer's standard color chips for each material requiring color selection.

1.4 QUALIFICATIONS

Signs letters shall be the standard product of a manufacturer regularly engaged in the manufacture of such products and shall essentially duplicate signs that have been in satisfactory use at least 2 years prior to bid opening.

1.5 DELIVERY AND STORAGE

Materials shall be delivered to the jobsite in manufacturer's original

packaging and stored in a clean, dry area in accordance with manufacturer's instructions.

1.6 EXTRA STOCK

The Contractor shall provide five extra room identification frames and related blank plates of color and size specified.

PART 2 PRODUCTS

2.1 ROOM IDENTIFICATION/DIRECTIONAL SIGNAGE SYSTEM

Signs shall be fabricated of acrylic plastic conforming to ANSI Z97.1.

2.1.1 Standard Room Signs

Signs shall consist of matte finish acrylic plastic with frames of molded acrylic. Corners of signs shall be squared.

2.1.2 Not Used

2.1.3 Type of Mounting For Signs

Extruded aluminum brackets, mounted as shown, shall be furnished for hanging, projecting, and double-sided signs. Mounting for framed, hanging, and projecting signs shall be by mechanical fasteners. Surface mounted signs shall be provided with countersunk mounting holes in plaques and mounting screws. Sign inserts shall be provided with (1/16 inch) thick foam tape.

2.1.4 Graphics

Signage graphics for modular identification/directional signs shall conform to the following:

Acrylic letters (1/8 inch) thick and chemically welded to (0.125 inch) thick acrylic backup sheet.

2.2 Not Used

2.3 Not Used

2.4 Not Used

2.5 ALUMINUM ALLOY PRODUCTS

Aluminum extrusions shall be at least (1/8 inch) thick, and aluminum plate or sheet shall be at least (0.0508 inch) thick. Extrusions shall conform to (ASTM B 221); plate and sheet shall conform to (ASTM B 209). Aluminum shall have mill finish, unless otherwise indicated. Welding for aluminum products shall conform to AWS D1.2.

2.6 Not Used

2.7 Not Used

2.8 FABRICATION AND MANUFACTURE

2.8.1 Factory Workmanship

Holes for bolts and screws shall be drilled or punched. Drilling and punching shall produce clean, true lines and surfaces. Exposed surfaces of work shall have a smooth finish and exposed riveting shall be flush. Fastenings shall be concealed where practicable.

2.8.2 Dissimilar Materials

Where dissimilar metals are in contact, the surfaces will be protected to prevent galvanic or corrosive action.

2.9 COLOR, FINISH, AND CONTRAST

Color shall be in accordance with Section 09915 COLOR SCHEDULE. In buildings required to be handicapped-accessible, the characters and background of signs shall be eggshell, matte, or other non-glare finish. Characters and symbols shall contrast with their background - either light characters on a dark background or dark characters on a light background.

PART 3 EXECUTION

3.1 INSTALLATION

Signs shall be installed in accordance with approved manufacturer's instructions at locations shown on the drawings and the attached signage schedule. Signs shall be installed plumb and true at mounting heights indicated, and by method shown or specified. Required blocking shall be installed where recommended by sign manufacturer. Signs which designate permanent rooms and spaces in handicapped-accessible buildings shall be installed on the wall adjacent to the latch side of the door. Where there is no wall space to the latch side of the door, including at double leaf doors, signs shall be placed on the nearest adjacent wall. Mounting location for such signage shall be so that a person may approach within (3 inches) of signage without encountering protruding objects or standing within the swing of a door. Signs on doors or other surfaces shall not be installed until finishes on such surfaces have been installed. Signs installed on glass surfaces shall be installed with matching blank back-up plates in accordance with manufacturer's instructions.

3.1.1 Anchorage

Anchorage shall be in accordance with approved manufacturer's instructions. Anchorage not otherwise specified or shown shall include slotted inserts, expansion shields, and powder-driven fasteners when approved for concrete; toggle bolts and through bolts for masonry; machine carriage bolts for steel; lag bolts and screws for wood. Exposed anchor and fastener materials shall be compatible with metal to which applied and shall have matching color and finish. Signs mounted to painted gypsum board surfaces shall be removable for painting maintenance. Signs mounted to lay-in ceiling grids shall be mounted with clip connections to ceiling tees.

3.1.2 Protection and Cleaning

The work shall be protected against damage during construction. Hardware and electrical equipment shall be adjusted for proper operation. Glass, frames, and other sign surfaces shall be cleaned in accordance with the manufacturer's approved instructions.

-- End of Section --

West Wing - First Floor Signage Matrix

Item	Constr. . Room No.	New Room No.	New Door No.	Constr. Door No.	Construction Room Name	Sign Types	Signage Text Room Name	Braille	Quantity
1	1100			1100 1100A	Corridor	CC2	Rooms W-101 - W-110 -------->	Yes	1
2	1111	W-111		1111	Mechanical Room	BB2	W-111 Mechanical	-	1
3	1112	W-112		1112	Linen	BB2	W-112 Housekeeping	Yes	1
4	1114	W-114		1114	Janitor	BB2	W-114 Custodian	Yes	1
5	1116	W-114			Vending	BB2	W-116 Vending	Yes	1
6	1115			1115A 1115B	Elevator Lobby	CC1	West Wing	No	1
7	1117	W-117		1117	Corridor	CC2	<------ Rooms W-120 - W-148	Yes	1
8	1118	W-118		1118	Mechanical Room	BB2	W-118 Mechanical	Yes	1
9	1119	W-119		1119	Storage	BB2	W-1119 Storage	Yes	1
10	1120	W-120		1120	Guest Room	BB4	W-120	Yes	1
11	1121	W-121		1121	Multi-Purpose	BB2	W-121 Administrative Offices	Yes	1
12	1122	W-122		1122	Guest Room	BB4	W-122	Yes	1
13	1123	W-123		1123	A.D.A. Room	BB4	W-123	Yes	1
14	1124	W-124		1124	Guest Room	BB4	W-124	Yes	1
15	1125	W-125		1125	A.D.A. Room	BB4	W-125	Yes	1
16	1126	W-126		1126	Guest Room	BB4	W-126	Yes	1
17	1127	W-127		1127	Linen	BB2	W-127 Linen	Yes	1
18	1128	W-128		1128	Guest Room	BB4	W-128	Yes	1
19	1129	W-129		1129	Laundry	BB2	W-129 Guest Laundry	Yes	1
20	1130	W-130		1130	Guest Room	BB4	W-130	Yes	1
21	1131	W-131		1131	Elec. - Comm.	BB2	W-131 Electrical / Comm	Yes	1
22	1132	W-132		1132	Guest Room	BB4	W-132	Yes	1
23	1133	W-133		1133	Guest Room	BB4	W-133	Yes	1
24	1134	W-134		1134	Guest Room	BB4	W-134	Yes	1
25	1135	W-135		1135	Guest Room	BB4	W-135	Yes	1
26	1136	W-136		1136	Guest Room	BB4	W-136	Yes	1
27	1137	W-137		1137	Guest Room	BB4	W-137	Yes	1
28	1138	W-138		1138	Guest Room	BB4	W-138	Yes	1
29	1139	W-139		1139	Guest Room	BB4	W-139	Yes	1
30	1140	W-140		1140	Guest Room	BB4	W-140	Yes	1
31	1141	W-141		1141	Guest Room	BB4	W-141	Yes	1

West Wing - First Floor Signage Matrix

Item	Constr. . Room No.	New Room No.	New Door No.	Constr. Door No.	Construction Room Name	Sign Types	Signage Text Room Name	Braille	Quantity
32	1142	W-142		1142	Guest Room	BB4	W-142	Yes	1
33	1143	W-143		1143	Guest Room	BB4	W-143	Yes	1
34	1144	W-144		1144	Guest Room	BB4	W-144	Yes	1
35	1145	W-145		1145	Guest Room	BB4	W-145	Yes	1
36	1146	W-146		1146	Guest Room	BB4	W-146	Yes	1
37	1147	W-147		1147	Guest Room	BB4	W-147	Yes	1
38	1148	W-148		1148	Guest Room	BB4	W-148	Yes	1
39	1149	W-149		1149	Elec.	BB2	W-149 Electrical	Yes	1
40	1150			1150 1150A	Vestibule	BB4	First Floor	Yes	1
41	1151			1151	Corridor	CC2	Rooms W101 - W148 ------->	Yes	1
42	103			103	Stair C	BB4	First Floor	Yes	1
43	104			104	Stair D	BB4	First Floor	Yes	1
44	105			105	Stair E	BB4	First Floor	Yes	1

Notes:
Located on exterior
Verify mounting location.
Locate together with Item 1
Add HC symbol to sign
Add HC symbol to sign

Notes:
Mount on stair side
Mount on stair side
Mount on stair side

West Wing - Second Floor Signage Matrix

Item	Constr. . Room No.	New Room No.	New Door No.	Constr. Door No.	Construction Room Name	Sign Types	Signage Text Room Name	Braille	Quantity	Notes:
1	2100				Corridor	CC2	Rooms W201 - W213 ------->	Yes	1	
2	2111	W-211		2111	Guest Room	BB4	W-211	Yes	1	
3	2112	W-212		2112	Linen	BB2	W-212 Housekeeping	Yes	1	
4	2113	W-213		2113	Guest Room	BB4	W-213	Yes	1	
5	2114	W-214		2114	Janitor	BB2	W-214 Custodian	Yes	1	
6	2115			2115	Elevator Lobby	---	---			
7	2116	W-216		2116	Vending	BB2	W-216 Vending	Yes	1	
8	2117			2117	Corridor	CC2	<------ Rooms W-219 - W-248	Yes	1	Locate together with Item 1
9	2117			2117	Corridor	BB4	Exit Stair	Yes	1	Locate at stair
9	2119	W-219		2119	Guest Room	BB4	W-219	Yes	1	
10	2120	W-220		2120	Guest Room	BB4	W-220	Yes	1	
11	2121	W-221		2121	Guest Room	BB4	W-221	Yes	1	
12	2122	W-222		2122	Guest Room	BB4	W-222	Yes	1	
13	2123	W-223		2123	Guest Room	BB4	W-223	Yes	1	
14	2124	W-224		2124	Guest Room	BB4	W-224	Yes	1	
15	2125	W-225		2125	A.D.A. Room	BB4	W-225	Yes	1	Add HC symbol to sign
16	2126	W-226		2126	Guest Room	BB4	W-226	Yes	1	
17	2127	W-227		2127	Linen	BB2	W-227 Linen	Yes	1	
18	2128	W-228		2128	Guest Room	BB4	W-228	Yes	1	
19	2129	W-229		2129	Laundry	BB2	W-229 Guest Laundry	Yes	1	
20	2130	W-230		2130	Guest Room	BB4	W-230	Yes	1	
21	2131	W-231		2131	Elec. - Comm.	BB2	W-231 Electrical / Comm	Yes	1	
22	2132	W-232		2132	Guest Room	BB4	W-232	Yes	1	
23	2133	W-233		2133	Guest Room	BB4	W-233	Yes	1	
24	2134	W-234		2134	Guest Room	BB4	W-234	Yes	1	
25	2135	W-235		2135	Guest Room	BB4	W-235	Yes	1	
26	2136	W-236		2136	Guest Room	BB4	W-236	Yes	1	
27	2137	W-237		2137	Guest Room	BB4	W-237	Yes	1	
28	2138	W-238		2138	Guest Room	BB4	W-238	Yes	1	
29	2139	W-239		2139	Guest Room	BB4	W-239	Yes	1	
30	2140	W-240		2140	Guest Room	BB4	W-240	Yes	1	

West Wing - Second Floor Signage Matrix

Item	Constr. . Room No.	New Room No.	New Door No.	Constr. Door No.	Construction Room Name	Sign Types	Signage Text Room Name	Braille	Quantity	Notes:
31	2141	W-241		2141	Guest Room	BB4	W-241	Yes	1	
32	2142	W-242		2142	Guest Room	BB4	W-242	Yes	1	
33	2143	W-243		2143	Guest Room	BB4	W-243	Yes	1	
34	2144	W-244		2144	Guest Room	BB4	W-244	Yes	1	
35	2145	W-245		2145	Guest Room	BB4	W-245	Yes	1	
36	2146	W-246		2146	Guest Room	BB4	W-246	Yes	1	
37	2147	W-247		2147	Guest Room	BB4	W-247	Yes	1	
38	2148	W-248		2148	Guest Room	BB4	W-248	Yes	1	
39	2149	W-249		2149	Elec.	BB2	W-249 Electrical	Yes	1	
40	2150			2150	Vestibule	---				
41	2151				Corridor	CC2	Rooms W201 - W246 ------->	Yes	1	Locate near grid K on N/S wall
42	2151			2151	Corridor	BB4	Exit Stair	Yes	1	Locate at stair
42	203			203	Stair C	BB4	Second Floor	Yes	1	Mount on stair side
43	204			204	Stair D	BB4	Second Floor	Yes	1	Mount on stair side
44	205			205	Stair E	BB4	Second Floor	Yes	1	Mount on stair side

West Wing - Third Floor Signage Matrix

Item	Constr. . Room No.	New Room No.	New Door No.	Constr. Door No.	Construction Room Name	Sign Types	Signage Text Room Name	Braille	Quantity	Notes:
1	3100				Corridor	CC2	Rooms W-301 - W-313 ------>	Yes	1	
2	3111	W-311		3111	Guest Room	BB4	W-311	Yes	1	
3	3112	W-312		3112	Linen	BB2	W-313 Housekeeping	Yes	1	
4	3113	W-313		3113	Guest Room	BB4	W-313	Yes	1	
5	3114	W-314		3114	Janitor	BB2	W-314 Custodian	Yes	1	
6	3115			3115	Elevator Lobby	---	---			
7	3116	W-316		3116	Vending	BB2	W-316 Vending	Yes	1	
8	3117			3117	Corridor	CC2	<------ Rooms W-319 - W-348	Yes	1	Locate together with Item 1
9	3117			3117	Corridor	BB4	Exit Stair	Yes	1	Locate at stair
10	3119	W-319		3119	Guest Room	BB4	W-319	Yes	1	
11	3120	W-320		3120	Guest Room	BB4	W-320	Yes	1	
12	3121	W-321		3121	Guest Room	BB4	W-321	Yes	1	
13	3122	W-322		3122	Guest Room	BB4	W-322	Yes	1	
14	3123	W-323		3123	Guest Room	BB4	W-323	Yes	1	
15	3124	W-324		3124	Guest Room	BB4	W-324	Yes	1	
16	3125	W-325		3125	A.D.A. Room	BB4	W-325	Yes	1	Add HC symbol to sign
17	3126	W-326		3126	Guest Room	BB4	W-326	Yes	1	
18	3127	W-327		3127	Linen	BB2	W-327 Linen	Yes	1	
19	3128	W-328		3128	Guest Room	BB4	W-228	Yes	1	
20	3129	W-329		3129	Laundry	BB2	W-329 Guest Laundry	Yes	1	
21	3130	W-330		3130	Guest Room	BB4	W-330	Yes	1	
22	3131	W-331		3131	Elec. - Comm.	BB2	W-331 Electrical / Comm	Yes	1	
23	3132	W-332		3132	Guest Room	BB4	W-332	Yes	1	
24	3133	W-333		3133	Guest Room	BB4	W-333	Yes	1	
25	3134	W-334		3134	Guest Room	BB4	W-334	Yes	1	
26	3135	W-335		3135	Guest Room	BB4	W-335	Yes	1	
27	3136	W-336		3136	Guest Room	BB4	W-336	Yes	1	
28	3137	W-337		3137	Guest Room	BB4	W-337	Yes	1	
29	3138	W-338		3138	Guest Room	BB4	W-338	Yes	1	
30	3139	W-339		3139	Guest Room	BB4	W-339	Yes	1	
31	3140	W-340		3140	Guest Room	BB4	W-340	Yes	1	

West Wing - Third Floor Signage Matrix

Item	Constr. . Room No.	New Room No.	New Door No.	Constr. Door No.	Construction Room Name	Sign Types	Signage Text Room Name	Braille	Quantity	Notes:
32	3141	W-341		3141	Guest Room	BB4	W-341	Yes	1	
33	3142	W-342		3142	Guest Room	BB4	W-342	Yes	1	
34	3143	W-343		3143	Guest Room	BB4	W-343	Yes	1	
35	3144	W-344		3144	Guest Room	BB4	W-344	Yes	1	
36	3145	W-345		3145	Guest Room	BB4	W-345	Yes	1	
37	3146	W-346		3146	Guest Room	BB4	W-346	Yes	1	
38	3147	W-347		3147	Guest Room	BB4	W-347	Yes	1	
39	3148	W-348		3148	Guest Room	BB4	W-348	Yes	1	
40	3149	W-349		3149	Elec.	BB2	W-349 Electrical	Yes	1	
41	3150			3150	Vestibule	---				
42	3151				Corridor	CC2	Rooms W301 - W346 ------->	Yes	1	Locate near grid K on N/S wall
43	3151				Corridor	BB4	Exit Stair	Yes	1	Locate at stair
43	303			303	Stair C	BB4	Third Floor	Yes	1	Mount on stair side
44	304			304	Stair D	BB4	Third Floor	Yes	1	Mount on stair side
45	305			305	Stair E	BB4	Third Floor	Yes	1	Mount on stair side

West Wing - Fourth Floor Signage Matrix

Item	Constr. . Room No.	New Room No.	New Door No.	Constr. Door No.	Construction Room Name	Sign Types	Signage Text Room Name	Braille	Quantity	Notes:
1	4100				Corridor	CC2	Rooms W-401 - W-413 ------>	Yes	1	
2	4111	W-411		4111	Guest Room	BB4	W-411	Yes	1	
3	4112	W-412		4112	Linen	BB2	W-412 Housekeeping	Yes	1	
4	4113	W-413		4113	Guest Room	BB4	W-413	Yes	1	
5	4114	W-414		4114	Janitor	BB2	W-414 Custodian	Yes	1	
6	4115			4115	Elevator Lobby	---	---			
7	4116	W-416		4116	Vending	BB2	W-416 Vending	Yes	1	
8	4117			4117	Corridor	CC2	<------ Rooms W-419 - W-448	Yes	1	Locate together with Item 1
9	4117			4117	Corridor	BB4	Exit Stair	Yes	1	Locate at stair
10	4119	W-419		4119	Guest Room	BB4	W-419	Yes	1	
11	4120	W-420		4120	Guest Room	BB4	W-420	Yes	1	
12	4121	W-421		4121	Guest Room	BB4	W-421	Yes	1	
13	4122	W-422		4122	Guest Room	BB4	W-422	Yes	1	
14	4123	W-423		4123	Guest Room	BB4	W-423	Yes	1	
15	4124	W-424		4124	Guest Room	BB4	W-424	Yes	1	
16	4125	W-425		4125	A.D.A. Room	BB4	W-425	Yes	1	Add HC symbol to sign
17	4126	W-426		4126	Guest Room	BB4	W-426	Yes	1	
18	4127	W-427		4127	Linen	BB2	W-427 Linen	Yes	1	
19	4128	W-428		4128	Guest Room	BB4	W-428	Yes	1	
20	4129	W-429		4129	Laundry	BB2	W-429 Guest Laundry	Yes	1	
21	4130	W-430		4130	Guest Room	BB4	W-430	Yes	1	
22	4131	W-431		4131	Elec. - Comm.	BB2	W-431 Electrical / Comm	Yes	1	
23	4132	W-432		4132	Guest Room	BB4	W-432	Yes	1	
24	4133	W-433		4133	Guest Room	BB4	W-433	Yes	1	
25	4134	W-434		4134	Guest Room	BB4	W-434	Yes	1	
26	4135	W-435		4135	Guest Room	BB4	W-435	Yes	1	
27	4136	W-436		4136	Guest Room	BB4	W-436	Yes	1	
28	4137	W-437		4137	Guest Room	BB4	W-437	Yes	1	
29	4138	W-438		4138	Guest Room	BB4	W-438	Yes	1	
30	4139	W-439		4139	Guest Room	BB4	W-439	Yes	1	
31	4140	W-440		4140	Guest Room	BB4	W-440	Yes	1	

West Wing - Fourth Floor Signage Matrix

Item	Constr. . Room No.	New Room No.	New Door No.	Constr. Door No.	Construction Room Name	Sign Types	Signage Text Room Name	Braille	Quantity	Notes:
32	4141	W-441		4141	Guest Room	BB4	W-441	Yes	1	
33	4142	W-442		4142	Guest Room	BB4	W-442	Yes	1	
34	4143	W-443		4143	Guest Room	BB4	W-443	Yes	1	
35	4144	W-444		4144	Guest Room	BB4	W-444	Yes	1	
36	4145	W-445		4145	Guest Room	BB4	W-445	Yes	1	
37	4146	W-446		4146	Guest Room	BB4	W-446	Yes	1	
38	4147	W-447		4147	Guest Room	BB4	W-447	Yes	1	
39	4148	W-448		4148	Guest Room	BB4	W-448	Yes	1	
40	4149	W-429		4149	Elec.	BB2	W-429 Electrical	Yes	1	
41	4150			4150	Vestibule	---				
42	4151				Corridor	CC2	Rooms W401 - W446 ------>	Yes	1	Locate near grid K on N/S wall
43	4151				Corridor	BB4	Exit Stair	Yes	1	Locate at stair
43	403			403	Stair C	BB4	Fourth Floor	Yes	1	Mount on stair side
44	404			404	Stair D	BB4	Fourth Floor	Yes	1	Mount on stair side
45	405			405	Stair E	BB4	Fourth Floor	Yes	1	Mount on stair side

SECTION TABLE OF CONTENTS

DIVISION 10 - SPECIALTIES

SECTION 10522

FIRE EXTINGUISHERS, CABINETS AND ACCESSORIES

7/99

PART 1 GENERAL

1.1 REFERENCES
1.2 SUBMITTALS

PART 2 PRODUCTS

2.1 FIRE EXTINGUISHER CABINETS - FIRE RATED
2.2 FIRE EXTINGUISHERS

PART 3 EXECUTION

3.1 INSTALLATION

-- End of Section Table of Contents --

SECTION 10522

FIRE EXTINGUISHERS, CABINETS AND ACCESSORIES
7/99

PART 1 GENERAL

1.1 REFERENCES

The publications listed below form a part of this specification to the extent referenced. The publications are referred to in the text by basic designation only.

AMERICAN SOCIETY FOR TESTING AND MATERIALS (ASTM)

ASTM E 814	(1994b) Test Method for Fire Tests of Through-Penetration Fire Stops

1.2 SUBMITTALS

Government approval is required for submittals with a "GA" designation; submittals having an "FIO" designation are for information only. The following shall be submitted in accordance with Section 01330 SUBMITTAL PROCEDURES:

SD-01 Data

Fire Extinguisher Cabinets; FIO.

Manufacturer's descriptive data and catalog cut sheets..

PART 2 PRODUCTS

2.1 FIRE EXTINGUISHER CABINETS - FIRE RATED

Semi-recessed fire extinguisher cabinets shall be similar to J.L. Industries design for Model No. "1037 V10 Cosmopolitan Series". Trim and door material shall be stainless steel with No. 4 satin finish. Trim style shall project 63 mm (2-1/2 inches) from wall plane and shall be of rolled edge construction with 31 mm (1-1/4 inch) trim face dimension. Flush cabinet doors shall be of formed design with 16 mm (5/8 inch) thickness, continuous door hinge, zinc plated pull handle and roller catch. Door style shall be contemporary with vertical view lite of 1/4 inch clear tempered glass. Lite shall extend from top to bottom of door less border width. Cabinet shall have tub inside dimensions of 10 1/2 inches wide by 24 inches high by 6 inches deep. Provide cabinets where indicated on drawings. Fire rated cabinets shall meet the requirements of ASTM E 814 and shall match the fire wall ratings in which they are installed.

2.2 FIRE EXTINGUISHERS

Fire extinguishers shall be provided by the Government.

PART 3 EXECUTION

3.1 INSTALLATION

Secure rigidly in place in accordance with manufacturer's instructions. Mount at ADA compliant mounting height.

-- End of Section --

SECTION TABLE OF CONTENTS

DIVISION 10 - SPECIALTIES

SECTION 10800

TOILET ACCESSORIES

08/98

PART 1 GENERAL

1.1 SUBMITTALS
1.2 DELIVERY, STORAGE, AND HANDLING
1.3 WARRANTY

PART 2 PRODUCTS

2.1 MANUFACTURED UNITS
2.1.1 Anchors and Fasteners
2.1.2 Finishes
2.2 ACCESSORY ITEMS
2.2.1 Facial Tissue Dispenser (FTD)
2.2.2 Grab Bar (GB)
2.2.3 Not Used
2.2.4 Not Used
2.2.5 Not Used
2.2.6 Not Used
2.2.7 Not Used
2.2.8 Not Used
2.2.9 Not Used
2.2.10 Not Used
2.2.11 Shower Curtain Rods (SCR)
2.2.12 Not Used
2.2.13 Soap Dish (SD)
2.2.14 Shelf with Mop and Broom Holder(SMBH)
2.2.15 Towel Bar with Towel Shelf (TBWS)
2.2.16 Not Used
2.2.17 Towel Bar (TB)
2.2.18 Towel Pin (TP)
2.2.19 Toilet Tissue Dispenser (TTD)

PART 3 EXECUTION

3.1 INSTALLATION
3.2 CLEANING

-- End of Section Table of Contents --

SECTION 10800

TOILET ACCESSORIES
08/98

PART 1 GENERAL

1.1 SUBMITTALS

Government approval is required for submittals with a "GA" designation, submittals having an "FIO" designation are for information only. The following shall be submitted in accordance with Section 01330 SUBMITTAL PROCEDURES:

SD-01 Data

Accessory Items; GA1.

Manufacturer's descriptive data and catalog cuts indicating materials of construction, fasteners proposed for use for each type of wall construction, mounting instructions, operation instructions, and cleaning instructions.

1.2 DELIVERY, STORAGE, AND HANDLING

Toilet accessories shall be wrapped for shipment and storage, delivered to the jobsite in manufacturer's original packaging, and stored in a clean, dry area protected from construction damage and vandalism.

1.3 WARRANTY

Manufacturer's standard performance guarantees or warranties that extend beyond a 1 year period shall be provided.

PART 2 PRODUCTS

2.1 MANUFACTURED UNITS

Toilet accessories shall be provided where indicated in accordance with paragraph SCHEDULE. Cultured marble wall accessories are specified in Section 006200 FINISH CARPENTRY. Each accessory item shall be complete with the necessary mounting plates and shall be of sturdy construction with corrosion resistant surface.

2.1.1 Anchors and Fasteners

Anchors and fasteners shall be capable of developing a restraining force commensurate with the strength of the accessory to be mounted and shall be suited for use with the supporting construction. Exposed fasteners shall be of tamperproof design and shall be finished to match the accessory.

2.1.2 Finishes

Except where noted otherwise, finishes on metal shall be provided as follows:

Metal	Finish
Stainless steel	No. 4 satin finish
Carbon steel, copper alloy, and brass	Chromium plated, bright

2.2 ACCESSORY ITEMS

Accessory items shall conform to the requirements specified below.

2.2.1 Facial Tissue Dispenser (FTD)

Facial tissue dispenser shall be recessed mounted, Type 304 stainless steel face, bright polished finish. Face of recessed dispenser shall be secured by friction with suitable spring steel clips. Dispenser shall have a minimum capacity of 150 two-ply tissues.

2.2.2 Grab Bar (GB)

Grab bar shall be 18 gauge, (1-1/4 inches) OD Type 304 stainless steel. Grab bar shall be form and length as indicated. Concealed mounting flange shall have mounting holes concealed. Grab bar shall have peened non-slip surface. Installed bars shall be capable of withstanding a (500 pound) vertical load without coming loose from the fastenings and without obvious permanent deformation. Space between wall and grab bar shall be (1-1/2 inch).

2.2.3 Not Used

2.2.4 Not Used

2.2.5 Not Used

2.2.6 Not Used

2.2.7 Not Used

2.2.8 Not Used

2.2.9 Not Used

2.2.10 Not Used

2.2.11 Shower Curtain Rods (SCR)

Shower curtain rods shall be 18-gauge, (1 inch) OD, Type 304 stainless steel, satin finish in lengths to meet installation conditions. Mount on concealed wall brackets.

2.2.12 Not Used

2.2.13 Soap Dish (SD)

Soap dish holder shall be surface mounted cultured marble to match tub surrounds. Refer to 06200 FINISH CARPENTRY for information.

2.2.14 Shelf with Mop and Broom Holder(SMBH)

Heavy duty metal shelf unit with mop and broom holder shall be minimum of 18 gauge Type 304 stainless steel with hemmed edges. Shelf unit shall be 864 mm (34 inches) long, 200 mm (8 inches) deep and 325 mm (13 inches) high. Three anti-slip mop holders with cam grips and four stainless steel hooks shall be mounted on stainless steel panel with shelf component above. Provide one shelf unit for each janitor closet indicated on drawings. Locate on wall above and adjacent to floor sink.

2.2.15 Towel Bar with Towel Shelf (TBWS)

154 mm (6 1/4 inches) wide shelf consisting of four 8 mm (5/16 inch) diameter round tubes mounted in support arms. Towel bar below shelf. Finish shall be bright polished stainless steel.

2.2.16 Not Used

2.2.17 Towel Bar (TB)

Towel bar shall be round , non-rotating tube, in bright polished stainless steel finish with a minimum thickness of (.015 inch). Bar shall be minimum 19mm (3/4 inch) in diameter.

2.2.18 Towel Pin (TP)

Towel pin shall have concealed wall fastenings, and a pin integral with or permanently fastened to 50 x 50 mm (2 x 2 inch) wall flange. Maximum projection shall be (4 inches). Design shall be consistent with design of other accessory items. Finish shall be bright polished stainless steel.

2.2.19 Toilet Tissue Dispenser (TTD)

Toilet tissue holder shall be recess mounted (hoodless) for two rolls of standard tissue set horizontally on rollers, and shall be located in countertop apron of vanity. Housing shall be bright polished stainless steel finish.

PART 3 EXECUTION

3.1 INSTALLATION

Toilet accessories shall be securely fastened to the supporting construction in accordance with the manufacturer's approved instructions. Accessories shall be protected from damage from the time of installation until acceptance.

3.2 CLEANING

Material shall be cleaned in accordance with manufacturer's recommendations. Alkaline or abrasive agents shall not be used. Precautions shall be taken to avoid scratching or marring of surfaces.

-- End of Section --

SECTION TABLE OF CONTENTS

DIVISION 12 - FURNISHINGS

SECTION 12490

WINDOW TREATMENT

01/98

PART 1 WORK DESCRIPTION

1.1 REFERENCES
1.2 GENERAL
1.3 SUBMITTALS
1.4 DELIVERY, STORAGE, AND HANDLING
1.5 FIELD MEASUREMENTS
1.6 WARRANTY

PART 2 PRODUCTS

2.1 WINDOW BLINDS
2.1.1 Horizontal Blinds
2.1.1.1 Head Channel and Slats
2.1.1.2 Controls
2.1.1.3 Intermediate Brackets
2.2 Not Used
2.3 COLOR

PART 3 EXECUTION

3.1 WINDOW TREATMENT PLACEMENT SCHEDULE
3.2 INSTALLATION

-- End of Section Table of Contents --

SECTION 12490

WINDOW TREATMENT
01/98

PART 1 WORK DESCRIPTION

1.1 REFERENCES

The publications listed below form a part of this specification to the extent referenced. The publications are referred to in the text by basic designation only.

FEDERAL SPECIFICATIONS (FS)

FS AA-V-00200 (Rev B) Venetian Blinds

1.2 GENERAL

Window treatment shall be provided, complete with necessary brackets, fittings, and hardware. Each window treatment type shall be a complete unit provided in accordance with paragraph WINDOW TREATMENT PLACEMENT SCHEDULE. Equipment shall be mounted and operated as indicated. Windows to receive a treatment shall be completely covered. The Contractor shall take measurements at the building and shall be responsible for the proper fitting and hanging of the equipment.

1.3 SUBMITTALS

Government approval is required for submittals with a "GA" designation; submittals having an "FIO" designation are for information only. The following shall be submitted in accordance with Section 01330 SUBMITTAL PROCEDURES:

SD-01 Data

Window Treatments and Hardware; FIO.

Manufacturer's data composed of catalog cuts, brochures, product information, and maintenance instructions.

SD-04 Drawings

Window Treatments and Hardware; FIO.

Drawings showing fabrication and installation details. Drawings shall show layout and locations of track, direction of draw, mounting heights, and details.

SD-14 Samples

Window Treatments and Hardware; GA1.

Three samples of each type and color of window treatment. Blind slats shall be (6 inches) in length for each color. Track shall be (6 inches) in length.

1.4 DELIVERY, STORAGE, AND HANDLING

Components shall be delivered to the jobsite in the manufacturer's original packaging with the brand or company name, item identification, and project reference clearly marked. Components shall be stored in a dry location that is adequately ventilated and free from dust, water, or other contaminants and shall have easy access for inspection and handling. Materials shall be stored flat in a clean dry area with temperature maintained above (50 degrees F).

1.5 FIELD MEASUREMENTS

The Contractor shall become familiar with details of the work, verify dimensions in the field, and shall advise the Contracting Officer of any discrepancy before performing the work.

1.6 WARRANTY

Manufacturer's standard performance guarantees or warranties that extend beyond a 1 year period shall be provided.

PART 2 PRODUCTS

2.1 WINDOW BLINDS

Each blind, including hardware, accessory items, mounting brackets and fastenings, shall be provided as a complete unit produced by one manufacturer. All parts shall be one color unless otherwise shown, and match the color of the blind slat. Steel features shall be treated for corrosion resistance.

2.1.1 Horizontal Blinds

Horizontal blinds shall conform to FS AA-V-00200, Type II slats. Blind units shall be capable of nominally 180 degree partial tilting operation and full-height raising. Blinds shall be outside mount as shown. Tapes for Type I slats shall be longitudinal reinforced vinyl plastic in 1-piece turn ladder construction.

2.1.1.1 Head Channel and Slats

Head channel shall be steel or aluminum nominal . Slats shall be aluminum, not less than (0.008 inch) thick, and of sufficient strength to prevent sag or bow in the finished blind. A sufficient amount of slats shall be provided to assure proper control, uniform spacing, and adequate overlap.

2.1.1.2 Controls

The slats shall be tilted by a transparent tilting wand, hung vertically by its own weight, and shall swivel for easy operation. The tilter control shall be of enclosed construction. Moving parts and mechanical drive shall be made of compatible materials which do not require lubrication during normal expected life. The tilter shall tilt the slats to any desired angle and hold them at that angle so that any vibration or movement of ladders and slats will not drive the tilter and change the angle of slats. A mechanism shall be included to prevent over tightening. The wand shall be of sufficient length to reach to within (5 feet) of the floor.

2.1.1.3 Intermediate Brackets

Intermediate brackets shall be provided for installation of blinds over (48 inches) wide and shall be installed as recommended by the manufacturer.

2.2 Not Used

2.3 COLOR

Color shall be in accordance with Section 09915 COLOR SCHEDULE.

PART 3 EXECUTION

3.1 WINDOW TREATMENT PLACEMENT SCHEDULE

Window treatment shall be provided at Room 1121(Multi-purpose room)only. Windows in corridors do not receive blinds.

3.2 INSTALLATION

Installation shall be in accordance with the approved detail drawings and manufacturer's installation instructions. Units shall be level, plumb, secure, and at proper height and location relative to window units. The Contractor shall furnish and install supplementary or miscellaneous items in total, including clips, brackets, or anchorages incidental to or necessary for a sound, secure, and complete installation. Installation shall not be initiated until completion of room painting and finishing operations. Upon completion of the installation, window treatments shall be adjusted for form and appearance, shall be in proper operating condition, and shall be free from damage or blemishes. Damaged units shall be repaired or replaced by the Contractor as directed by the Contracting Officer.

-- End of Section --

SECTION TABLE OF CONTENTS

DIVISION 13 - SPECIAL CONSTRUCTION

SECTION 13110

CATHODIC PROTECTION SYSTEM (SACRIFICIAL ANODE)

PART 1 GENERAL

1.1 REFERENCES
1.2 GENERAL REQUIREMENTS
1.2.1 Services of "Corrosion Expert"
1.2.2 [Enter Appropriate Subpart Title Here]
1.3 SUBMITTALS

PART 2 PRODUCTS

PART 3 EXECUTION

3.1 CRITERIA OF PROTECTION

-- End of Section Table of Contents --

SECTION 13110

CATHODIC PROTECTION SYSTEM (SACRIFICIAL ANODE)

PART 1 GENERAL

1.1 REFERENCES

The publications listed below form a part of this specification to the extent referenced. The publications are referred to in the text by basic designation only.

NACE INTERNATIONAL (NACE)

NACE RP0169	(1996) Control of External Corrosion on Underground or Submerged Metallic Piping Systems

1.2 GENERAL REQUIREMENTS

1.2.1 Services of "Corrosion Expert"

The Contractor shall obtain the services of a "corrosion expert" to supervise, inspect, and test the installation and performance of the cathodic protection system. "Corrosion expert" refers to a person, who by thorough knowledge of the physical sciences and the principles of engineering and mathematics, acquired by professional education and related practical experience, is qualified to engage in the practice of corrosion control of buried or submerged metallic surfaces. Such a person must be accredited or certified by the National Association of Corrosion Engineers (NACE) as a NACE Accredited Corrosion Specialist or a NACE certified Cathodic Protection (CP) Specialist or be a registered professional engineer who has certification or licensing that includes education and experience in corrosion control of buried or submerged metallic piping and tank systems, if such certification or licensing includes 5 years experience in corrosion control on underground metallic surfaces of the type under this contract. The "corrosion expert" shall verify that the cathodic protection system is installed, tested, and placed into service in accordance with the requirements specified.

1.2.2 [Enter Appropriate Subpart Title Here]

1.2.2 Rules

The installation shall conform to the applicable rules of NFPA 70.

1.3 SUBMITTALS

Drawings. The Contractor shall submit four (4) copies of detail drawings of the cathodic protection system to the Cathodic Expert for approval prior to installation. The drawings shall be prepared by, or under the direction of, an NACE Accredited Corrosion Specialist or Senior Corrosion Specialist.

Operating Trtaining. When the final check-out of the cathodic protection system is complete, the NACE Accredited Corrosion Specialist or Senior Corrosion Specialist shall instruct the Owner's Representative on the system operation.

Resurvey. One (1) year following the completion of the installation of the cathodic protection system, the system supplier shall return and test the system, reinstruct the operator, and provide four (4) copies of a written report and submit a contract to the Owner's Representative for a yearly survey thereafter.

Evidence of qualifications of the "corrosion expert."

a. The "corrosion expert's" name and qualifications shall be certified in writing to the Contracting Officer prior to the start of construction.

b. Certification shall be submitted giving the name of the firm, the number of years of experience, and a list of not less than five (5) of the firm's installations three (3) or more years old that have been tested and found satisfactory.

PART 2 PRODUCTS

2.1 Coating

All buried cast iron piping and fittings shall receive two (2) coats of a coal tar enamel Koppers Bitumastic No. 50 or approved equal. Hot asphalt will not be considered an acceptable substitute.

2.2 Bonding

Pipeline joints and valves shall be electrically insulated from all other underground structures by suitable insulating fittings.

2.3 Insulation

The pipeline shall be electrically insulated from all other underground structures by suitable insulating fittings.

Test Leads

Test leads and test boxes shall be installed as required on the underground pipeline.

PART 3 EXECUTION

3.1 CRITERIA OF PROTECTION

Acceptance criteria for determining the adequacy of protection on a buried underground pipeshall be in accordance with NACE RP0169 and as specified below.

3.2 Testing

All necessary materials including packaged magnesium anodes with a life of approximately twenty (20) years or an impressed current system using Durichlor 51 Long Life Anodes shall be used to obtain a structure to earth potential of -0.85 volts or more (negative) as measured to a CuSo4 half cell. Upon completion of the work, the COntractor shall submit four (4) copies of a written report to the Contracting Officer covering all the test data.

-- End of Section --

SECTION TABLE OF CONTENTS

DIVISION 13 - SPECIAL CONSTRUCTION

SECTION 13851

FIRE DETECTION AND ALARM SYSTEM, ADDRESSABLE

08/98

PART 1 GENERAL

1.1 REFERENCES
1.2 GENERAL REQUIREMENTS
1.2.1 Standard Products
1.2.2 Nameplates
1.2.3 Keys and Locks
1.2.4 Tags
1.2.5 Verification of Dimensions
1.2.6 Compliance
1.2.7 Qualifications
1.2.7.1 Engineer and Technician
1.2.7.2 Installer
1.2.7.3 Design Services
1.3 SYSTEM DESIGN
1.3.1 Operation
1.3.2 Operational Features
1.3.3 Alarm Functions
1.3.4 Primary Power
1.3.5 Battery Backup Power
1.3.6 Interface With other Equipment
1.4 TECHNICAL DATA AND COMPUTER SOFTWARE
1.5 SUBMITTALS
1.6 DELIVERY AND STORAGE

PART 2 PRODUCTS

2.1 CONTROL PANEL
2.1.1 Remote System Audible/Visual Display
2.1.2 Circuit Connections
2.1.3 System Expansion and Modification Capabilities
2.1.4 Addressable Control Module
2.1.5 Addressable Initiating Device Circuits Module
2.2 STORAGE BATTERIES
2.3 BATTERY CHARGER
2.4 ADDRESSABLE MANUAL FIRE ALARM STATIONS
2.5 FIRE DETECTING DEVICES
2.5.1 Heat Detectors
2.5.1.1 Combination Fixed-Temperature and Rate-of-Rise Detectors
2.5.2 Smoke Detectors
2.5.2.1 Photoelectric Detectors
2.5.2.2 Not Used
2.5.2.3 Duct Detectors
2.6 NOTIFICATION APPLIANCES
2.6.1 Alarm Horns
2.6.2 Visual Notification Appliances

2.6.3 Combination Audible/Visual Notification Appliances
2.7 FIRE DETECTION AND ALARM SYSTEM PERIPHERAL EQUIPMENT
2.7.1 Electromagnetic Door Hold-Open Devices
2.7.2 Conduit
2.7.3 Wiring
2.7.4 Special Tools and Spare Parts
2.8 TRANSMITTERS
2.8.1 Radio Alarm Transmitters
2.8.1.1 Transmitter Power Supply
2.8.1.2 Radio Alarm Transmitter Housing
2.8.1.3 Antenna

PART 3 EXECUTION

3.1 INSTALLATION
3.1.1 Power Supply for the System
3.1.2 Wiring
3.1.3 Control Panel
3.1.4 Detectors
3.1.5 Notification Appliances
3.1.6 Annunciator Equipment
3.1.7 Addressable Initiating Device Circuits Module
3.2 OVERVOLTAGE AND SURGE PROTECTION
3.2.1 Power Line Surge Protection
3.2.2 Low Voltage DC Circuits Surge Protection
3.2.3 Signal Line Circuit Surge Protection
3.3 GROUNDING
3.4 SUPERVISING STATION PROVISIONS
3.5 TESTING
3.5.1 Preliminary Tests
3.5.2 Acceptance Test
3.6 TRAINING

-- End of Section Table of Contents --

SECTION 13851

FIRE DETECTION AND ALARM SYSTEM, ADDRESSABLE
08/98

PART 1 GENERAL

1.1 REFERENCES

The publications listed below form a part of this specification to the extent referenced. The publications are referred to in the text by basic designation only.

AMERICAN NATIONAL STANDARDS INSTITUTE (ANSI)

ANSI S3.41	(1990) Audible Emergency Evacuation Signals

CODE OF FEDERAL REGULATIONS (CFR)

47 CFR 15	Radio Frequency Devices

INSTITUTE OF ELECTRICAL AND ELECTRONICS ENGINEERS (IEEE)

IEEE C62.41	(1991) Surge Voltages in Low-Voltage AC Power Circuits

NATIONAL FIRE PROTECTION ASSOCIATION (NFPA)

NFPA 70	(1996) National Electrical Code
NFPA 72	(1996) National Fire Alarm Code
NFPA 90A	(1996) Installation of Air Conditioning and Ventilating Systems
NFPA 1221	(1994) Installation, Maintenance and Use of Public Fire Service Communication Systems

UNDERWRITERS LABORATORIES (UL)

UL 6	(1997) Rigid Metal Conduit
UL 38	(1994; Rev Jan 1994) Manually Actuated Signaling Boxes for Use with Fire-Protective Signaling Systems
UL 228	(1997) Door Closers-Holders, With or Without Integral Smoke Detectors
UL 268	(1996) Smoke Detectors for Fire Protective Signaling Systems
UL 268A	(1993; Rev thru May 1997) Smoke Detectors for Duct Applications

UL 464	(1996) Audible Signal Appliances
UL 521	(1993; Rev Oct 1994) Heat Detectors for Fire Protective Signaling Systems
UL 797	(1993; Rev thru Mar 1997) Electrical Metallic Tubing
UL 864	(1991; Rev thru May 1994) Control Units for Fire-Protective Signaling Systems
UL 1242	(1996) Intermediate Metal Conduit
UL 1971	(1995; Rev thru May 1997) Signaling Devices for the Hearing Impaired

1.2 GENERAL REQUIREMENTS

1.2.1 Standard Products

Material and equipment shall be manufactured by notifier and shall be the same model numbers used in the phase II building. Equipment shall be supported by a service organization that can provide service within 24 hours of notification.

1.2.2 Nameplates

Major components of equipment shall have the manufacturer's name, address, type or style, voltage and current rating, and catalog number on a noncorrosive and nonheat-sensitive plate which is securely attached to the equipment.

1.2.3 Keys and Locks

Locks shall be keyed alike. Four keys for the system shall be provided.

1.2.4 Tags

Tags with stamped identification number shall be furnished for keys and locks.

1.2.5 Verification of Dimensions

After becoming familiar with details of the work, the Contractor shall verify dimensions in the field and shall advise the Contracting Officer of any discrepancy before performing the work.

1.2.6 Compliance

The fire detection and alarm system and the central reporting system shall be configured in accordance with NFPA 72. The equipment furnished shall be compatible and be UL listed, FM approved, or approved or listed by a nationally recognized testing laboratory in accordance with the applicable NFPA standards.

1.2.7 Qualifications

1.2.7.1 Engineer and Technician

a. Registered Professional Engineer with verification of experience and at least 4 years of current experience in the design of the fire protection and detection systems.

1.2.7.2 Installer

A Fire Alarm Technician with a minimum of 4 years of experience shall perform/supervise the installation of the fire alarm system. Fire Alarm Technicians with a minimum of 2 years of experience shall be utilized to assist in the installation and terminate fire alarm devices, cabinets and panels. An electrician shall be allowed to install wire or cable and to install conduit for the fire alarm system. The Fire Alarm technicians installing the equipment shall be factory trained in the installation, adjustment, testing, and operation of the equipment specified herein and on the drawings.

1.2.7.3 Design Services

Installations requiring designs or modifications of fire detection, fire alarm, or fire suppression systems shall require the services and review of a qualified fire protection engineer. For the purposes of meeting this requirement, a qualified fire protection engineer is defined as an individual meeting one of the following conditions:

a. A registered PE in a related engineering discipline and member grade status in the National Society of Fire Protection Engineers.

1.3 SYSTEM DESIGN

1.3.1 Operation

The fire alarm and detection system shall be a complete, supervised fire alarm system. The system shall be activated into the alarm mode by actuation of any alarm initiating device. The system shall remain in the alarm mode until the initiating device is reset and the fire alarm control panel is reset and restored to normal. Alarm initiating devices shall be connected to initiating device circuits (IDC), Style B, to signal line circuits (SLC), Style 6, in accordance with NFPA 72. Alarm notification appliances shall be connected to notification appliance circuits (NAC), Style Z in accordance with NFPA 72. A looped conduit system shall be provided so that if the conduit and all conductors within are severed at any point, all IDC, NAC and SLC will remain functional. The conduit loop requirement is not applicable to the signal transmission link from the local panels (at the protected premises) to the Supervising Station (fire station, fire alarm central communication center). Textual, audible, and visual appliances and systems shall comply with NFPA 72. Fire alarm system components requiring power, except for the control panel power supply, shall operate on 24 Volts dc. Addressable system shall be microcomputer (microprocessor or microcontroller) based with a minimum word size of eight bits and shall provide the following features:

a. Sufficient memory to perform as specified and as shown for addressable system.

b. Individual identity of each addressable device for the following

conditions: alarm; trouble; open; short; and appliances missing/failed remote detector - sensitivity adjustment from the panel for smoke detectors

c. Capability of each addressable device being individually disabled or enabled from the panel.

d. Each SLC shall be sized to provide 40 percent addressable expansion without hardware modifications to the panel.

1.3.2 Operational Features

The system shall have the following operating features:

a. Monitor electrical supervision of IDC, SLC, and NAC. Smoke detectors shall have combined alarm initiating and power circuits.

b. Monitor electrical supervision of the primary power (ac) supply, battery voltage, placement of alarm zone module (card, PC board) within the control panel, and transmitter tripping circuit integrity.

c. A trouble buzzer and trouble LED/LCD (light emitting diode/liquid crystal diode) to activate upon a single break, open, or ground fault condition which prevents the required normal operation of the system. The trouble signal shall also operate upon loss of primary power (ac) supply, low battery voltage, removal of alarm zone module (card, PC board), and disconnection of the circuit used for transmitting alarm signals off-premises. A trouble alarm silence switch shall be provided which will silence the trouble buzzer, but will not extinguish the trouble indicator LED/LCD. Subsequent trouble and supervisory alarms shall sound the trouble signal until silenced. After the system returns to normal operating conditions, the trouble buzzer shall again sound until the silencing switch returns to normal position, unless automatic trouble reset is provided.

d. A one person test mode. Activating an initiating device in this mode will activate an alarm for a short period of time, then automatically reset the alarm, without activating the transmitter during the entire process.

e. A transmitter disconnect switch to allow testing and maintenance of the system without activating the transmitter but providing a trouble signal when disconnected and a restoration signal when reconnected.

f. Evacuation alarm silencing switch which, when activated, will silence alarm devices, but will not affect the zone indicating LED/LCD nor the operation of the transmitter. This switch shall be over-ridden upon activation of a subsequent alarm from an unalarmed device and the NAC devices will be activated.

g. Electrical supervision for circuits used for supervisory signal services (i.e., sprinkler systems, valves, etc.). Supervision shall detect any open, short, or ground.

h. Confirmation or verification of all smoke detectors. The control panel shall interrupt the transmission of an alarm signal to the

system control panel for a factory preset period. This interruption period shall be adjustable from 1 to 60 seconds and be factory set at 20 seconds. Immediately following the interruption period, a confirmation period shall be in effect during which time an alarm signal, if present, will be sent immediately to the control panel. Fire alarm devices other than smoke detectors shall be programmed without confirmation or verification.

i. The fire alarm control panel shall provide supervised addressable relays for HVAC shutdown. An override at the HVAC panel shall not be provided.

j. Provide one person test mode - Activating an initiating device in this mode will activate an alarm for a short period of time, then automatically reset the alarm, without activating the transmitter during the entire process.

k. The fire alarm control panel shall provide the required monitoring and supervised control outputs needed to accomplish elevator recall.

l. The fire alarm control panel shall monitor the fire sprinkler system, or other fire protection extinguishing system.

m. The control panel and field panels shall be software reprogrammable to enable expansion or modification of the system without replacement of hardware or firmware. Examples of required changes are: adding or deleting devices or zones; changing system responses to particular input signals; programming certain input signals to activate auxiliary devices.

n. Zones shall be arranged as indicated on the contract drawings.

1.3.3 Alarm Functions

An alarm condition on a circuit shall automatically initiate the following functions:

a. Transmission of signals over the station radio fire reporting system. The signal shall correspond with the zones as indicated above.

b. Visual indications of the alarmed devices on the fire alarm control panel display and on the remote audible/visual display.

c. Continuous sounding or operation of alarm notification appliances throughout the building as required by ANSI S3.41.

d. Closure of doors held open by electromagnetic devices.

e. Operation of the smoke control system.

f. Deactivation of the air handling units as specified by HVAC Engineer.

1.3.4 Primary Power

Operating power shall be provided as required by paragraph Power Supply for

the System. Transfer from normal to emergency power or restoration from emergency to normal power shall be fully automatic and not cause transmission of a false alarm. Loss of ac power shall not prevent transmission of a signal via the fire reporting system upon operation of any initiating circuit.

1.3.5 Battery Backup Power

Battery backup power shall be through use of rechargeable, sealed-type storage batteries and battery charger.

1.3.6 Interface With other Equipment

Interfacing components shall be furnished as required to connect to subsystems or devices which interact with the fire alarm system, such as supervisory or alarm contacts in suppression systems, operating interfaces for smoke control systems, door releases, etc.

1.4 TECHNICAL DATA AND COMPUTER SOFTWARE

Technical data and computer software (meaning technical data which relates to computer software) which is specifically identified in this project, and which may be defined/required in other specifications, shall be delivered, strictly in accordance with the CONTRACT CLAUSES, and in accordance with the Contract Data Requirements List, DD Form 1423. Data delivered shall be identified by reference to the particular specification paragraph against which it is furnished. Data to be submitted shall include complete system, equipment, and software descriptions. Descriptions shall show how the equipment will operate as a system to meet the performance requirements of this contract. The data package shall also include the following:

(1) Identification of programmable portions of system equipment and capabilities.

(2) Description of system revision and expansion capabilities and methods of implementation detailing both equipment and software requirements.

(3) Provision of operational software data on all modes of programmable portions of the fire alarm and detection system.

(4) Description of Fire Alarm Control Panel equipment operation.

(5) Description of auxiliary and remote equipment operations.

(6) Library of application software.

(7) Operation and maintenance manuals as specified in SD-19 of the Submittals paragraph.

1.5 SUBMITTALS

Government approval is required for submittals with a "GA" designation; submittals having an "FI0" designation are for information only. The following shall be submitted in accordance with Section 01330 SUBMITTAL PROCEDURES:

SD-01 Data

Storage Batteries; GA.

Substantiating battery calculations for supervisory and alarm power requirements. Ampere-hour requirements for each system component and each panel component, and the battery recharging period shall be included.

Voltage Drop; GA.

Voltage drop calculations for notification appliance circuits to indicate that sufficient voltage is available for proper appliance operation.

Spare Parts;] GA.

Spare parts data for each different item of material and equipment specified, not later than 3 months prior to the date of beneficial occupancy. Data shall include a complete list of parts and supplies with the current unit prices and source of supply and a list of the parts recommended by the manufacturer to be replaced after 1 year of service.

Technical Data and Computer Software; GA.

Technical data which relates to computer software.

SD-04 Drawings

Fire Alarm Reporting System; GA1.

Detail drawings, prepared and signed by a Registered Professional Engineer or a NICET Level 3 Fire Alarm Technician, consisting of a complete list of equipment and material, including manufacturer's descriptive and technical literature, catalog cuts, and installation instructions. Note that the contract drawings show layouts based on typical detectors. The Contractor shall check the layout based on the actual detectors to be installed and make any necessary revisions in the detail drawings. The detail drawings shall also contain complete wiring and schematic diagrams for the equipment furnished, equipment layout, and any other details required to demonstrate that the system has been coordinated and will properly function as a unit. Detailed point-to-point wiring diagram shall be prepared and signed by a Registered Professional Engineer or a NICET Level 3 Fire Alarm Technician showing points of connection. Diagram shall include connections between system devices, appliances, control panels, supervised devices, and equipment that is activated or controlled by the panel.

SD-06 Instructions

Training; GA.

Lesson plans, operating instructions, maintenance procedures, and training data, furnished in manual format, for the training courses. The operations training shall familiarize designated government personnel with proper operation of the fire alarm system. The maintenance training course shall provide the designated government personnel adequate knowledge required to diagnose, repair, maintain, and expand functions inherent to the system.

SD-08 Statements

Testing; GA.

Detailed test procedures, prepared and signed by a Registered Professional

Engineer or a NICET Level 3 Fire Alarm Technician, for the fire detection and alarm system 60 days prior to performing system tests.

SD-09 Reports

Testing; GA.

Test reports, in booklet form, showing field tests performed to prove compliance with the specified performance criteria, upon completion and testing of the installed system. Each test report shall document readings, test results and indicate the final position of controls. The Contractor shall include the NFPA 72 Certificate of Completion and NFPA 72 Inspection and Testing Form, with the appropriate test reports.

SD-13 Certificates

Equipment; GA.

Certified copies of current approvals or listings issued by an independent test lab if not listed by UL, FM or other nationally recognized testing laboratory, showing compliance with specified NFPA standards.

Qualifications; GA.

Proof of qualifications for required personnel. The installer shall submit proof of experience for the Professional Engineer, fire alarm technician, and the installing company.

SD-19 Operation and Maintenance Manuals

Technical Data and Computer Software; GA.

Six copies of operating manual outlining step-by-step procedures required for system startup, operation, and shutdown. The manual shall include the manufacturer's name, model number, service manual, parts list, and complete description of equipment and their basic operating features. [Six] copies of maintenance manual listing routine maintenance procedures, possible breakdowns and repairs, and troubleshooting guide. The manuals shall include conduit layout, equipment layout and simplified wiring, and control diagrams of the system as installed. The manuals shall include complete procedures for system revision and expansion, detailing both equipment and software requirements. Original and backup copies of all software delivered for this project shall be provided, on each type of media utilized. Manuals shall be approved prior to training.

1.6 DELIVERY AND STORAGE

Equipment delivered and placed in storage shall be stored with protection from the weather, humidity and temperature variation, dirt, dust, and any other contaminants.

PART 2 PRODUCTS

2.1 CONTROL PANEL

Control Panel shall comply with the applicable requirements of UL 864. Panel shall be modular, installed in a surface mounted steel cabinet with hinged door and cylinder lock. Control panel shall be a clean, uncluttered, and orderly assembled panel containing components and

equipment required to provide the specified operating and supervisory functions of the system. The panel shall have prominent rigid plastic, phenolic or metal identification plates for LED/LCDs, zones, SLC, controls, meters, fuses, and switches. Nameplates for fuses shall also include ampere rating. The LED/LCD displays shall be located on the exterior of the cabinet door or be visible through the cabinet door. Control panel switches shall be within the locked cabinet. A suitable means (single operation) shall be provided for testing the control panel visual indicating devices (meters or LEDs/LCDs). Meters and LEDs shall be plainly visible when the cabinet door is closed. Signals and LEDs/LCDs shall be provided to indicate by zone any alarm, supervisory or trouble condition on the system. Loss of power, including batteries, shall not require the manual reloading of a program. Upon restoration of power, startup shall be automatic, and shall not require any manual operation. The loss of primary power or the sequence of applying primary or emergency power shall not affect the transmission of alarm, supervisory or trouble signals. Visual annunciation shall be provided for LED/LCD visual display as an integral part of the control panel and shall identify with a word description and id number each device. Cabinets shall be provided with ample gutter space to allow proper clearance between the cabinet and live parts of the panel equipment. If more than one modular unit is required to form a control panel, the units shall be installed in a single cabinet large enough to accommodate units. Cabinets shall be painted red cabinet shall not exceed 28" in width.

2.1.1 Remote System Audible/Visual Display

Audible appliance shall have a minimum sound level output rating of 85 dBA at 10 feet and operate in conjunction with the panel integral display. The audible device shall be silenced by a system silence switch on the remote system. The audible device shall be silenced by the system silence switch located at the remote location, but shall not extinguish the visual indication. The remote LED/LCD visual display shall provide identification, consisting of the word description and id number for each device as displayed on the control panel. A rigid plastic, phenolic or metal identification sign which reads "Fire Alarm System Remote Display" shall be provided at the remote audible/visual display. The remote visual appliance located with the audible appliance shall not be extinguished until the trouble or alarm has been cleared.

2.1.2 Circuit Connections

Circuit conductors entering or leaving the panel shall be connected to screw-type terminals with each conductor and terminal marked for identification.

2.1.3 System Expansion and Modification Capabilities

Any equipment and software needed by qualified technicians to implement future changes to the fire alarm system shall be provided as part of this contract.

2.1.4 Addressable Control Module

The control module shall be capable of operating as a relay (dry contact form C) for interfacing the control panel with other systems, and to control door holders or initiate elevator fire service. The module shall be UL listed as compatible with the control panel. The indicating device or the external load being controlled shall be configured as a Style Y

notification appliance circuits. The system shall be capable of supervising, audible, visual and dry contact circuits. The control module shall have both an input and output address. The supervision shall detect a short on the supervised circuit and shall prevent power from being applied to the circuit. The control model shall provide address setting means compatible with the control panel's SLC supervision and store an internal identifying code. The control module shall contain an integral LED that flashes each time the control module is polled.

2.1.5 Addressable Initiating Device Circuits Module

The initiating device being monitored shall be configured as a Style 6 initiating device circuits. The system shell be capable of defining any module as an alarm module and report alarm trouble, loss of polling, or as a supervisory module, and reporting supervisory short, supervisory open or loss of polling. The module shall be UL listed as compatible with the control panel. The monitor module shall provide address setting means compatible with the control panel's SLC supervision and store an internal identifying code. Monitor module shall contain an integral LED that flashes each time the monitor module is polled. Pull stations with a monitor module in a common backbox are not required to have an LED.

2.2 STORAGE BATTERIES

Storage batteries shall be provided and shall be 24 Vdc sealed, lead-calcium type requiring no additional water. The batteries shall have ample capacity, with primary power disconnected, to operate the fire alarm system for a period of 72 hours. Following this period of battery operation, the batteries shall have ample capacity to operate all components of the system, including all alarm signaling devices in the total alarm mode for a minimum period of 15 minutes. Batteries shall be located at the bottom of the panel. Batteries shall be provided with overcurrent protection in accordance with NFPA 72. Separate battery cabinets shall have a lockable, hinged cover similar to the fire alarm panel. The lock shall be keyed the same as the fire alarm control panel. Cabinets shall be painted to match the fire alarm control panel.

2.3 BATTERY CHARGER

Battery charger shall be completely automatic, 24 Vdc with high/low charging rate, capable of restoring the batteries from full discharge (18 Volts dc) to full charge within 48 hours. A pilot light indicating when batteries are manually placed on a high rate of charge shall be provided as part of the unit assembly, if a high rate switch is provided. Charger shall be located in control panel cabinet or in a separate battery cabinet.

2.4 ADDRESSABLE MANUAL FIRE ALARM STATIONS

Addressable manual fire alarm stations shall conform to the applicable requirements of UL 38. Manual stations shall be connected into signal line circuits. Stations shall be installed on flush mounted outlet boxes. Manual stations shall be mounted at 42 inches. Stations shall be single action type. Stations shall be finished in red, with raised letter operating instructions of contrasting color. Stations requiring the breaking of glass or plastic panels for operation are not acceptable. Stations employing glass rods are acceptable. The use of a key or wrench shall be required to reset the station. Gravity or mercury switches are not acceptable. Switches and contacts shall be rated for the voltage and current upon which they operate. Addressable pull stations shall be

capable of being field programmed, shall latch upon operation and remain latched until manually reset. Stations shall have a separate screw terminal for each conductor. Surface mounted boxes shall be matched and painted the same color as the mounting surface.

2.5 FIRE DETECTING DEVICES

Fire detecting devices shall comply with the applicable requirements of NFPA 72, NFPA 90A, UL 268, UL 268A, and UL 521. The detectors shall be provided as indicated. Detector base shall have screw terminals for making connections. No solder connections will be allowed. Detectors located in concealed locations (above ceiling, raised floors, etc.) shall have a remote visible indicator LED/LCD. Addressable fire detecting devices, except flame detectors, shall be dynamically supervised and uniquely identified in the control panel. All fire alarm initiating devices shall be individually addressable, except where indicated. Installed devices shall conform to NFPA 70 hazard classification of the area where devices are to be installed.

2.5.1 Heat Detectors

Heat detectors shall be designed for detection of fire by combination fixed temperature and rate-of-rise principle . Heat detector spacing shall be rated in accordance with UL 521. Detectors located in areas subject to moisture, exterior atmospheric conditions, or hazardous locations as defined by NFPA 70, shall be types approved for such locations. Heat detectors located in attic spaces or similar concealed spaces below the roof shall be intermediate temperature rated.

2.5.1.1 Combination Fixed-Temperature and Rate-of-Rise Detectors

Detectors shall be designed for semi-flush outlet box mounting and supported independently of wiring connections. Contacts shall be self-resetting after response to rate-of-rise principle. Under fixed temperature actuation, the detector shall have a permanent external indication which is readily visible. Detector units located in boiler rooms, showers, or other areas subject to abnormal temperature changes shall operate on fixed temperature principle only. The UL 521 test rating for the fixed temperature portion shall be 135 degrees F.. The UL 521 test rating for the Rate-of-Rise detectors shall be rated for 50 by 50 ft.

2.5.2 Smoke Detectors

Smoke detectors shall be designed for detection of abnormal smoke densities. Smoke detectors shall be photoelectric or projected beam type. Detectors shall contain a visible indicator LED/LCD that shows when the unit is in alarm condition. Detectors shall not be adversely affected by vibration or pressure. Detectors shall be the plug-in type in which the detector base contains terminals for making wiring connections. Detectors that are to be installed in concealed (above false ceilings, etc.) locations shall be provided with a remote indicator LED/LCD suitable for mounting in a finished, visible location.

2.5.2.1 Photoelectric Detectors

Detectors shall operate on a light scattering concept using an LED light source. Failure of the LED shall not cause an alarm condition. Detectors shall be factory set for sensitivity and shall require no field adjustments of any kind. Detectors shall have an obscuration rating in accordance with

UL 268. Addressable smoke detectors shall be capable of having the sensitivity being remotely adjusted by the control panel.

2.5.2.2 Not Used

2.5.2.3 Duct Detectors

Duct-mounted photoelectric smoke detectors shall be furnished and installed where indicated and in accordance with NFPA 90A. Units shall consist of a smoke detector as specified in paragraph Photoelectric Detectors, mounted in a special housing fitted with duct sampling tubes. Detector circuitry shall be mounted in a metallic enclosure exterior to the duct. Detectors shall have a manual reset. Detectors shall be rated for air velocities that include air flows between 500 and 4000 fpm. Detectors shall be powered from the fire alarm panel. Sampling tubes shall run the full width of the duct. The duct detector package shall conform to the requirements of NFPA 90A, UL 268A, and shall be UL listed for use in air-handling systems. The control functions, operation, reset, and bypass shall be controlled from the fire alarm control panel. Lights to indicate the operation and alarm condition; and the test and reset buttons shall be visible and accessible with the unit installed and the cover in place. Detectors mounted above 6 feet and those mounted below 6 feet that cannot be easily accessed while standing on the floor, shall be provided with a remote detector indicator panel containing test and reset switches. Remote lamps and switches as well as the affected fan units shall be properly identified in etched plastic placards. Detectors shall have auxiliary contacts to provide control, interlock, and shutdown functions specified in Section 15950 HEATING, VENTILATING AND AIR CONDITIONING (HVAC) CONTROL SYSTEMS. The detectors shall be supplied by the fire alarm system manufacturer to ensure complete system compatibility.

2.6 NOTIFICATION APPLIANCES

Audible appliances shall conform to the applicable requirements of UL 464. Devices shall be connected into notification appliance circuits. Devices shall have a separate screw terminal for each conductor. Audible appliances shall generate a unique audible sound from other devices provided in the building and surrounding area. Surface mounted audible appliances shall be painted red. Recessed audible appliances shall be installed with a grill that is painted redwith a factory finish to match the surface to which it is mounted.

2.6.1 Alarm Horns

Horns shall be surface mounted, with the matching mounting back box recessed vibrating type suitable for use in an electrically supervised circuit. Horns shall produce a sound rating of at least 85 dBA at 10 feet. Horns used in exterior locations shall be specifically listed or approved for outdoor use and be provided with metal housing and protective grilles.

2.6.2 Visual Notification Appliances

Visual notification appliances shall conform to the applicable requirements of UL 1971 and the contract drawings. Appliances shall have clear high intensity optic lens, xenon flash tubes, and output white light. Strobe flash rate shall be between 1 to 3 flashes per second and a minimum of 75 candela. Strobe shall be [surface] [semi-flush] mounted.

2.6.3 Combination Audible/Visual Notification Appliances

Combination audible/visual notification appliances shall provide the same requirements as individual units except they shall mount as a unit in standard backboxes. Units shall be factory assembled. Any other audible notification appliance employed in the fire alarm systems shall be approved by the Contracting Officer.

2.7 FIRE DETECTION AND ALARM SYSTEM PERIPHERAL EQUIPMENT

2.7.1 Electromagnetic Door Hold-Open Devices

Devices shall be attached to the walls unless otherwise indicated. Devices shall comply with the appropriate requirements of UL 228. Devices shall operate on 24 Volt dc power. Compatible magnetic component shall be attached to the door. Under normal conditions, the magnets shall attract and hold the doors open. When magnets are de-energized, they shall release the doors. Magnets shall have a holding force of 25 pounds. Devices shall be UL or FM approved. Housing for devices shall be brushed aluminum or stainless steel. Operation shall be fail safe with no moving parts. Electromagnetic door hold-open devices shall not be required to be held open during building power failure.

2.7.2 Conduit

Conduit and fittings shall comply with NFPA 70, UL 6, UL 1242, and UL 797.

2.7.3 Wiring

Wiring for 120 Vac power shall be No. 12 AWG minimum. The SLC wiring shall be fiber optic or copper cable in accordance with the manufacturers requirements. Wiring for fire alarm dc circuits shall be No. 16 AWG minimum. Voltages shall not be mixed in any junction box, housing, or device, except those containing power supplies and control relays. Wiring shall conform to NFPA 70. System field wiring shall be solid copper and installed in metallic conduit or electrical metallic tubing, except that rigid plastic conduit may be used under slab-on-grade. Conductors shall be color coded. Conductors used for the same functions shall be similarly color coded. Wiring code color shall remain uniform throughout the circuit. Pigtail or T-tap connections to initiating device circuits, supervisory alarm circuits, and notification appliance circuits are prohibited. T-tapping using screw terminal blocks is allowed for style 5 addressable systems.

2.7.4 Special Tools and Spare Parts

Software, connecting cables and proprietary equipment, necessary for the maintenance, testing, and reprogramming of the equipment shall be furnished to the Contracting Officer. Two spare fuses of each type and size required shall be furnished. Two percent of the total number of each different type of detector, but no less than two each, shall be furnished. Spare fuses shall be mounted in the fire alarm panel.

2.8 TRANSMITTERS

2.8.1 Radio Alarm Transmitters

Transmitters shall be compatible with proprietary supervising station receiving equipment. Each radio alarm transmitter shall be the manufacturer's recognized commercial product, completely assembled, wired,

factory tested, and delivered ready for installation and operation. Transmitters shall be provided in accordance with applicable portions of NFPA 72, NFPA 1221, and 47 CFR 15. Transmitter electronics module shall be contained within the physical housing as an integral, removable assembly. The proprietary supervising station receiving equipment is a Monaco Enterprises D-500 Radio Alarm System and the transceiver shall be fully compatible with this equipment. At the contractors option, and if UL listed, the transmitter may be housed in the same panel as the fire alarm control panel.

2.8.1.1 Transmitter Power Supply

Each radio alarm transmitter shall be powered by a combination of locally available 120-volt ac power and a sealed, lead-calcium battery.

a. Operation: Each transmitter shall operate from 120-volt ac power. In the event of 120-volt ac power loss, the transmitter shall automatically switch to battery operation. Switchover shall be accomplished with no interruption of protective service, and shall automatically transmit a trouble message. Upon restoration of ac power, transfer back to normal ac power supply shall also be automatic..

b. Battery Power: Transmitter standby battery capacity shall provide sufficient power to operate the transmitter in a normal standby status for a minimum of 72 hours and be capable of transmitting alarms during that period.

2.8.1.2 Radio Alarm Transmitter Housing

Transmitter housing shall be NEMA Type 1. The housing shall contain a lock that is keyed identical to radio alarm transmitter housings on the base. Radio alarm transmitter housing shall be factory painted with a suitable priming coat and not less than two coats of a hard, durable weatherproof enamel. Housing shall not exceed 24" in width.

2.8.1.3 Antenna

The Contractor shall provide halfwave dipole antennasfor radio alarm transmitters with a driving point impedance to match transmitter output. The antenna and antenna mounts shall be corrosion resistant and designed to withstand wind velocities of 100 mph. Antennas shall not be mounted to any portion of the building roofing system.

PART 3 EXECUTION

3.1 INSTALLATION

All work shall be installed as shown and in accordance with the manufacturer's diagrams and recommendations, unless otherwise specified. Smoke detectors shall not be installed until construction is essentially complete and the building has been thoroughly cleaned.

3.1.1 Power Supply for the System

A single dedicated circuit connection for supplying power from a branch circuit to each building fire alarm system shall be provided. The power shall be supplied as shown on the drawings. The power supply shall be equipped with a locking mechanism and marked in red with the words "FIRE ALARM CIRCUIT CONTROL".

3.1.2 Wiring

Conduit size for wiring shall be in accordance with NFPA 70. Wiring for the fire alarm system shall not be installed in conduits, junction boxes, or outlet boxes with conductors of lighting and power systems. Not more than two conductors shall be installed under any device screw terminal. The wires under the screw terminal shall be straight when placed under the terminal then clamped in place under the screw terminal. The wires shall be broken and not twisted around the terminal. Circuit conductors entering or leaving any mounting box, outlet box enclosure, or cabinet shall be connected to screw terminals with each terminal and conductor marked in accordance with the wiring diagram. Connections and splices shall be made using screw terminal blocks. The use of wire nut type connectors in the system is prohibited. Wiring within any control equipment shall be readily accessible without removing any component parts. The fire alarm equipment manufacturer's representative shall be present for the connection of wiring to the control panel.

3.1.3 Control Panel

The control panel and its assorted components shall be mounted so that no part of the enclosing cabinet is less than 12 inches nor more than 78 inches above the finished floor. Manually operable controls shall be between 36 and 42 inches above the finished floor. Panel shall be installed to comply with the requirements of UL 864.

3.1.4 Detectors

Detectors shall be located and installed in accordance with NFPA 72. Detectors shall be connected into signal line circuits or initiating device circuits as indicated on the drawings. Detectors shall be at least 12 inches from any part of any lighting fixture. Detectors shall be located at least 3 feet from diffusers of air handling systems. Each detector shall be provided with appropriate mounting hardware as required by its mounting location. Detectors which mount in open space shall be mounted directly to the end of the stubbed down rigid conduit drop. Conduit drops shall be firmly secured to minimize detector sway. Where length of conduit drop from ceiling or wall surface exceeds 3 feet, sway bracing shall be provided. Detectors installed in concealed locations (above ceiling, raised floors, etc.) shall have a remote visible indicator LED/LCD.

3.1.5 Notification Appliances

Notification appliances shall be mounted 80 inches above the finished floor or 6 inches below the ceiling, whichever is lower.

3.1.6 Annunciator Equipment

Annunciator equipment shall be mounted where indicated on the drawings.

3.1.7 Addressable Initiating Device Circuits Module

The initiating device circuits module shall be used to connect supervised conventional initiating devices (water flow switches, water pressure switches, manual fire alarm stations, high/low air pressure switches, and tamper switches). The module shall mount in an electrical box adjacent to or connected to the device it is monitoring and shall be capable of Style B supervised wiring to the initiating device. In order to maintain proper

supervision, there shall be no T-taps allowed on style B lines. Addressable initiating device circuits modules shall monitor only one initiating device each. Contacts in suppression systems and other fire protection subsystems shall be connected to the fire alarm system to perform supervisory and alarm functions as specified in Section 13930 WET PIPE SPRINKLER SYSTEM, FIRE PROTECTIONNFPA 72, as indicated on the drawings and as specified herein.

3.2 OVERVOLTAGE AND SURGE PROTECTION

3.2.1 Power Line Surge Protection

All equipment connected to alternating current circuits shall be protected from surges per IEEE C62.41 B3 combination waveform and NFPA 70. Fuses shall not be used for surge protection. The surge protector shall be rated for a maximum let thru voltage of 350 Volts ac (line-to-neutral) and 350 Volt ac (neutral-to-ground).

3.2.2 Low Voltage DC Circuits Surge Protection

All IDC, NAC, and communication cables/conductors, except fiber optics, shall have surge protection installed at each point where it exits or enters a building. Equipment shall be protected from surges per IEEE C62.41 B3 combination waveform and NFPA 70. The surge protector shall be rated to protect the 24 Volt dc equipment. The maximum dc clamping voltages shall be 36 V (line-to-ground) and 72 Volt dc (line-to-line).

3.2.3 Signal Line Circuit Surge Protection

All SLC cables/conductors, except fiber optics, shall have surge protection/isolation circuits installed at each point where it exits or enters a building. The circuit shall be protected from surges per IEEE C62.41 B3 combination waveform and NFPA 70. The surge protector/isolator shall be rated to protect the equipment.

3.3 GROUNDING

Grounding shall be provided by connecting to building ground system.

3.4 SUPERVISING STATION PROVISIONS

[The proprietary type Supervising Station (PSS) is located in the Base Firestation. The supervising equipment is existing and consists of the following brands and models: Monaco Enterprises D-500 Radio Alarm System.

3.5 TESTING

The Contractor shall notify the Contracting Officer at least 10 days before the preliminary and acceptance tests are to be conducted. The tests shall be performed in accordance with the approved test procedures in the presence of the Contracting Officer. The control panel manufacturer's representative shall be present to supervise tests. The Contractor shall furnish instruments and personnel required for the tests.

3.5.1 Preliminary Tests

Upon completion of the installation, the system shall be subjected to functional and operational performance tests including tests of each installed initiating and notification appliance, when required. Tests

shall include the meggering of system conductors to determine that the system is free from grounded, shorted, or open circuits. The megger test shall be conducted prior to the installation of fire alarm equipment. If deficiencies are found, corrections shall be made and the system shall be retested to assure that it is functional. After completing the preliminary testing the Contractor shall complete and submit the NFPA 72, Certificate of Completion.

3.5.2 Acceptance Test

Acceptance testing shall not be performed until the Contractor has completed and submitted the Certificate of Completion. Testing shall be in accordance with NFPA 72. The recommended tests in NFPA 72 shall be considered mandatory and shall verify that previous deficiencies have been corrected. The Contractor shall complete and submit the NFPA 72, Inspection and Testing Form. The test shall include all requirements of NFPA 72 and the following:

a. Test of each function of the control panel.

b. Test of each circuit in both trouble and normal modes.

c. Tests of each alarm initiating devices in both normal and trouble conditions.

d. Tests of each control circuit and device.

e. Tests of each alarm notification appliance.

f. Tests of the battery charger and batteries.

g. Complete operational tests under emergency power supply.

h. Visual inspection of wiring connections.

i. Opening the circuit at each alarm initiating device and notification appliance to test the wiring supervisory feature.

j. Ground fault

k. Short circuit faults

l. Stray voltage

m. Loop resistance

3.6 TRAINING

Training course shall be provided for the operations and maintenance staff. The course shall be conducted in the building where the system is installed or as designated by the Contracting Officer. The training period for systems operation shall consist of 1 training days (8 hours per day) and shall start after the system is functionally completed but prior to final acceptance tests. The training period for systems maintenance shall consist of 2 1 training days (8 hours per day) and shall start after the system is functionally completed but prior to final acceptance tests. The instructions shall cover items contained in the operating and maintenance instructions. In addition, training shall be provided on performance of expansions or modifications to the fire detection and alarm system. The

training period for system expansions and modifications shall consist of at least 1 training days (8 hours per day) and shall start after the system is functionally completed but prior to final acceptance tests.

-- End of Section --

SECTION TABLE OF CONTENTS

DIVISION 13 - SPECIAL CONSTRUCTION

SECTION 13930

WET PIPE SPRINKLER SYSTEM, FIRE PROTECTION

04/98

PART 1 GENERAL

1.1 REFERENCES
1.2 GENERAL REQUIREMENTS
1.2.1 Hydraulic Design
1.2.1.1 Hose Demand
1.2.1.2 Basis for Calculations
1.2.2 Sprinkler Spacing
1.3 SUBMITTALS
1.4 HYDRAULIC CALCULATIONS
1.5 SUBMITTAL PREPARER'S QUALIFICATIONS
1.6 INSTALLER QUALIFICATIONS
1.7 REGULATORY REQUIREMENTS
1.8 DELIVERY AND STORAGE

PART 2 PRODUCTS

2.1 GENERAL EQUIPMENT REQUIREMENTS
2.1.1 Standard Products
2.1.2 Requirements for Fire Protection Service
2.1.3 Nameplates
2.2 UNDERGROUND PIPING SYSTEMS
2.2.1 Pipe
2.2.2 Fittings and Gaskets
2.2.3 Gate Valve and Indicator Posts
2.3 ABOVEGROUND PIPING SYSTEMS
2.3.1 Steel Piping System
2.3.1.1 Steel Pipe
2.3.1.2 Fittings for Non-Grooved Steel Pipe
2.3.1.3 Grooved Mechanical Joints and Fittings
2.3.1.4 Flanges
2.3.2 Copper Tube Systems
2.3.2.1 Copper Tube
2.3.2.2 Copper Fittings
2.3.3 Not Used
2.3.4 Pipe Hangers
2.3.5 Valves
2.3.5.1 Control Valve and Gate Valve
2.3.5.2 Check Valve
2.3.5.3 Hose Valve
2.4 ALARM CHECK VALVE ASSEMBLY
2.5 WATER MOTOR ALARM ASSEMBLY
2.6 ALARM INITIATING AND SUPERVISORY DEVICES
2.6.1 Sprinkler Waterflow Indicator Switch, Vane Type
2.6.2 Sprinkler Pressure (Waterflow) Alarm Switch
2.6.3 Valve Supervisory (Tamper) Switch

2.7 FIRE DEPARTMENT CONNECTION
2.8 SPRINKLERS
2.8.1 Upright Sprinkler
2.8.2 Pendent Sprinkler
2.8.3 Sidewall Sprinkler
2.8.4 Residential Sprinkler
2.9 DISINFECTING MATERIALS
2.9.1 Liquid Chlorine
2.9.2 Hypochlorites
2.10 ACCESSORIES
2.10.1 Sprinkler Cabinet
2.10.2 Pendent Sprinkler Escutcheon
2.10.3 Pipe Escutcheon
2.10.4 Sprinkler Guard
2.10.5 Identification Sign
2.11 Not Used
2.12 DOUBLE-CHECK VALVE BACKFLOW PREVENTION ASSEMBLY

PART 3 EXECUTION

3.1 INSTALLATION REQUIREMENTS
3.2 ABOVEGROUND PIPING INSTALLATION
3.2.1 Protection of Piping Against Earthquake Damage
3.2.2 Piping in Exposed Areas
3.2.3 Piping in Finished Areas
3.2.4 Pendent Sprinklers
3.2.4.1 Pendent Sprinkler Locations
3.2.5 Upright Sprinklers
3.2.6 Pipe Joints
3.2.7 Reducers
3.2.8 Pipe Penetrations
3.2.9 Escutcheons
3.2.10 Inspector's Test Connection
3.2.11 Drains
3.2.12 Installation of Fire Department Connection
3.2.13 Identification Signs
3.3 UNDERGROUND PIPING INSTALLATION
3.4 EARTHWORK
3.5 ELECTRICAL WORK
3.6 DISINFECTION
3.7 FIELD PAINTING AND FINISHING
3.8 PRELIMINARY TESTS
3.8.1 Underground Piping
3.8.1.1 Flushing
3.8.1.2 Hydrostatic Testing
3.8.2 Aboveground Piping
3.8.2.1 Hydrostatic Testing
3.8.3 Testing of Alarm Devices
3.8.4 Main Drain Flow Test
3.9 FINAL ACCEPTANCE TEST

-- End of Section Table of Contents --

SECTION 13930

WET PIPE SPRINKLER SYSTEM, FIRE PROTECTION
04/98

PART 1 GENERAL

1.1 REFERENCES

The publications listed below form a part of this specification to the extent referenced. The publications are referred to in the text by basic designation only.

AMERICAN SOCIETY FOR TESTING AND MATERIALS (ASTM)

ASTM A 47	(1990; R 1995) Ferritic Malleable Iron Castings
ASTM A 53	(1997) Pipe, Steel, Black and Hot-Dipped, Zinc-Coated, Welded and Seamless
ASTM A 135	(1997) Electric-Resistance-Welded Steel Pipe
ASTM A 183	(1983; R 1990) Carbon Steel Track Bolts and Nuts
ASTM A 536	(1984; R 1993) Ductile Iron Castings
ASTM A 795	(1996) Black and Hot-Dipped Zinc-Coated (Galvanized) Welded and Seamless Steel Pipe for Fire Protection Use
ASTM B 88	(1996) Seamless Copper Water Tube

AMERICAN SOCIETY OF MECHANICAL ENGINEERS (ASME)

ASME B16.1	(1989) Cast Iron Pipe Flanges and Flanged Fittings
ASME B16.3	(1992) Malleable Iron Threaded Fittings
ASME B16.4	(1992) Cast Iron Threaded Fittings
ASME B16.9	(1993) Factory-Made Wrought Steel Buttwelding Fittings
ASME B16.11	(1996) Forged Fittings, Socket-Welding and Threaded
ASME B16.18	(1984; R 1994) Cast Copper Alloy Solder Joint Pressure Fittings
ASME B16.21	(1992) Nonmetallic Flat Gaskets for Pipe

	Flanges
ASME B16.22	(1995) Wrought Copper and Copper Alloy Solder Joint Pressure Fittings
ASME B18.2.1	(1996) Square and Hex Bolts and Screws Inch Series
ASME B18.2.2	(1987; R 1993) Square and Hex Nuts (Inch Series)

AMERICAN SOCIETY OF SANITARY ENGINEERING (ASSE)

ASSE 1015	(1993) Double Check Backflow Prevention Assembly

AMERICAN WATER WORKS ASSOCIATION (AWWA)

AWWA-01	(1995) Standard Methods for the Examination of Water and Wastewater
AWWA B300	(1992) Hypochlorites
AWWA B301	(1992) Liquid Chlorine
AWWA ANSI/AWWA C104/A21.4	(1995) Cement-Mortar Lining for Ductile-Iron Pipe and Fittings for Water
AWWA ANSI/AWWA C110/A21.10	(1993) Ductile-Iron and Gray-Iron Fittings, 3 In. Through 48 In. (75 mm through 1200 mm), for Water and Other Liquids
AWWA ANSI/AWWA C111/A21.11	(1995) Rubber-Gasket Joints for Ductile-Iron Pressure Pipe and Fittings
AWWA ANSI/AWWA C151/A21.51	(1996) Ductile-Iron Pipe, Centrifugally Cast, for Water or Other Liquids
AWWA C203	(1991) Coal-Tar Protective Coatings and Linings for Steel Water Pipelines - Enamel and Tape - Hot-Applied
AWWA M20	(1973) Manual: Water Chlorination Principles and Practices

FACTORY MUTUAL ENGINEERING AND RESEARCH (FM)

FM P7825a	(1998) Approval Guide Fire Protection
FM P7825b	(1998) Approval Guide Electrical Equipment

MANUFACTURERS STANDARDIZATION SOCIETY OF THE VALVE AND FITTINGS INDUSTRY (MSS)

MSS SP-71	(1997) Cast Iron Swing Check Valves, Flanges and Threaded Ends

NATIONAL FIRE PROTECTION ASSOCIATION (NFPA)

NFPA 13	(1996; Errata 13-96-1) Installation of Sprinkler Systems
NFPA 13R	(1996) Installation of Sprinkler Systems in Residential Occupancies Up to and Including Four Stories in Height
NFPA 24	(1995) Installation of Private Fire Service Mains and Their Appurtenances
NFPA 231C	(1995; TIA 95-1) Rack Storage of Materials
NFPA 1963	(1993) Fire Hose Connections

NATIONAL INSTITUTE FOR CERTIFICATION IN ENGINEERING TECHNOLOGIES (NICET)

NICET 1014	(1995) Program Detail Manual for Certification in the Field of Fire Protection Engineering Technology (Field Code 003) Subfield of Automatic Sprinkler System Layout

UNDERWRITERS LABORATORIES (UL)

UL 668	(1995) Hose Valves For Fire Protection Service
UL Bld Mat Dir	(1998) Building Materials Directory
UL Fire Prot Dir	(1998) Fire Protection Equipment Directory

1.2 GENERAL REQUIREMENTS

Wet pipe sprinkler system shall be provided in all areas of the buildingas indicated on the drawings. The sprinkler system shall provide fire sprinkler protection for the entire area. Except as modified herein, the system shall be designed and installed in accordance with NFPA 13 and NFPA 13R. Pipe sizes shall be determined by hydraulic calculation.

1.2.1 Hydraulic Design

The system shall be hydraulically designed to discharge a minimum density of 0.38 L/min per square meter (0.10 gpm per square foot) over the hydraulically most demanding 139 square meters (1500 square feet) of floor area. The minimum pipe size for branch lines in gridded systems shall be 32 mm(1-1/4 inch). Hydraulic calculations shall be in accordance with the Area/Density Method of NFPA 13.

1.2.1.1 Hose Demand

An allowance for interior and exterior hose stream flow of 946 L/min (250 gpm) shall be added to the sprinkler system demand

1.2.1.2 Basis for Calculations

The design of the system shall be based upon a water supply with a static pressure of 80 psi, and a flow of 900 gpm at a residual pressure of 75 psi.

Water supply shall be presumed available at the base of the riser80 psi. Hydraulic calculations shall be based upon the Hazen-Williams formula with a "C" value of 120 for steel piping, and 100 for existing underground piping.

1.2.2 Sprinkler Spacing

Sprinklers shall be uniformly spaced on branch lines. Maximum spacing per sprinkler shall not exceed (13.38 square meters (144 square feet).limits specified in NFPA 13 for light hazard occupancy

1.3 SUBMITTALS

Government approval is required for submittals with a "GA" designation; submittals having an "FIO" designation are for information only. Submittals related to system configuration, hydraulic calculations, and equipment selection, including manufacturer's catalog data, working drawings, connection drawings, control diagrams and certificates shall be submitted concurrently as a complete package. The package will be reviewed by the U.S. Army Engineer District Fire Protection Engineer. The following shall be submitted in accordance with Section 01330 SUBMITTAL PROCEDURES:

SD-01 Data

Load Calculations for Sizing Sway Bracing

For systems that are required to be protected against damage from earthquakes, load calculations shall be provided for sizing of sway bracing.

Sprinkler System Equipment; GA1.

Manufacturer's Catalog Data for each separate piece of equipment proposed for use in the system. Data shall indicate the name of the manufacturer of each item of equipment, with data highlighted to indicate model, size, options, etc. proposed for installation. In addition, a complete equipment list which includes equipment description, model number and quantity shall be provided.

Hydraulic Calculations; GA1.

Hydraulic calculations, including a drawing showing hydraulic reference points and pipe segments.

Spare Parts; FIO.

Spare parts data shall be included for each different item of material and equipment specified. The data shall include a complete list of parts and supplies, with current unit prices and source of supply, and a list of parts recommended by the manufacturer to be replaced after 1 year and 3 years of service. A list of special tools and test equipment required for maintenance and testing of the products supplied by the Contractor shall be included.

SD-04 Drawings

Sprinkler System Shop Drawings; GA1.

Detail drawings conforming to the requirements established for working plans as prescribed in NFPA 13. Drawings shall include plan and elevation

views which establish that the equipment will fit the allotted spaces with clearance for installation and maintenance. Each set of drawings shall include the following:

a. Descriptive index of drawings in the submittal with drawings listed in sequence by drawing number. A legend identifying device symbols, nomenclature, and conventions used.

b. Floor plans drawn to a scale not less than 1/8" = 1'-0" which clearly show locations of sprinklers, risers, pipe hangers, seismic separation assemblies, sway bracing, inspector's test connections, drains, and other applicable details necessary to clearly describe the proposed arrangement. Each type of fitting used and the locations of bushings, reducing couplings, and welded joints shall be indicated.

c. Actual center-to-center dimensions between sprinklers on branch lines and between branch lines; from end sprinklers to adjacent walls; from walls to branch lines; from sprinkler feed mains, cross-mains and branch lines to finished floor and roof or ceiling. A detail shall show the dimension from the sprinkler and sprinkler deflector to the ceiling in finished areas.

d. Longitudinal and transverse building sections showing typical branch line and cross-main pipe routing as well as elevation of each typical sprinkler above finished floor.

e. Details of each type of riser assembly; pipe hanger; sway bracing for earthquake protection, and restraint of underground water main at point-of-entry into the building, and electrical devices and interconnecting wiring.

As-Built Drawings; FIO.

As-built drawings, no later than 14 working days after completion of the Final Tests. The sprinkler system shop drawings shall be updated to reflect as-built conditions after work is completed and shall be on reproducible full-size mylar film.

SD-06 Instructions

Test Procedures; FIO.

Proposed test procedures for piping hydrostatic test, testing of alarms, at least 14 days prior to the start of related testing.

SD-07 Schedules

Preliminary Tests; FIO.

A schedule of preliminary tests, at least 14 days prior to the proposed start of the tests.

Final Test; GA.

Upon successful completion of tests specified under paragraph PRELIMINARY TESTS, written notification shall be given to the Contracting Officer of the date for the final acceptance test. Notification shall be provided at least 14 days prior to the proposed start of the test. Notification shall

include a copy of the Contractor's Material & Test Certificates.

SD-08 Statements

Installer Qualifications; FIO.

Qualifications of the sprinkler installer.

Submittal Preparer's Qualifications; FIO.

The name and documentation of certification of the individual who will prepare the submittals, prior to the submittal of the drawings and hydraulic calculations.

SD-13 Certificates

Contractor's Material & Test Certificates; FIO.

Certificates, as specified in NFPA 13, shall be completed and signed by the Contractor's Representative performing required tests for both underground and aboveground piping.

SD-19 Operation and Maintenance Manuals

Sprinkler System; FIO.

Manuals shall be in loose-leaf binder format and grouped by technical sections consisting of manufacturer's standard brochures, schematics, printed instructions, general operating procedures, and safety precautions. The manuals shall list routine maintenance procedures possible breakdowns, and repairs, and troubleshooting guide. This shall include procedures and instructions pertaining to frequency of preventive maintenance, inspection, adjustment, lubrication and cleaning necessary to minimize corrective maintenance and repair.

1.4 HYDRAULIC CALCULATIONS

Hydraulic calculations shall be as outlined in NFPA 13 except that calculations shall be performed by computer using software specifically designed for fire protection system design. Software which uses k-factors for typical branch lines is not acceptable. Calculations shall be taken back to the water supply source unless water supply data is otherwise indicated. Calculations shall substantiate that the design area indicated is the hydraulically most demanding. Water supply curves and system requirements shall be plotted on semi-logarithmic graph paper so as to present a summary of the complete hydraulic calculation. A summary sheet listing sprinklers in the design area and their respective hydraulic reference points, elevations, actual discharge pressures and actual flows shall be provided. Elevations of hydraulic reference points (nodes) shall be indicated. Documentation shall identify each pipe individually and the nodes connected thereto. The diameter, length, flow, velocity, friction loss, number and type fittings, total friction loss in the pipe, equivalent pipe length and Hazen-Williams coefficient shall be indicated for each pipe. For gridded systems, calculations shall show peaking of demand area friction loss to verify that the hydraulically most demanding area is being used. Also for gridded systems, a flow diagram indicating the quantity and direction of flows shall be included. A drawing showing hydraulic reference points (nodes) and pipe designations used in the calculations shall be included and shall be independent of shop drawings.

1.5 SUBMITTAL PREPARER'S QUALIFICATIONS

The sprinkler system submittals, including as-built drawings, shall be prepared by an individual who is either a registered professional engineer or who is certified as a Level IV Technician by National Institute for Certification in Engineering Technologies (NICET) in the Automatic Sprinkler System Layout subfield of Fire Protection Engineering Technology in accordance with NICET 1014.

1.6 INSTALLER QUALIFICATIONS

The installer shall be experienced and regularly engaged in the installation of the type and complexity of system included in this project. A statement prior to submittal of any other data or drawings, that the proposed sprinkler system installer is regularly engaged in the installation of the type and complexity of system included in this project shall be provided. In addition, data identifying the location of at least three systems recently installed by the proposed installer which are comparable to the system specified shall be submitted. Contractor shall certify that each system has performed satisfactorily, in the manner intended, for a period of not less than 6 months.

1.7 REGULATORY REQUIREMENTS

Compliance with referenced NFPA standards is mandatory. This includes advisory provisions listed in the appendices of such standards, as though the word "shall" had been substituted for the word "should" wherever it appears. Applicable material and installation standards referenced in Appendix A of NFPA 13 and NFPA 24 shall be considered mandatory the same as if such referenced standards were specifically listed in this specification. In the event of a conflict between specific provisions of this specification and applicable NFPA standards, this specification shall govern. All requirements that exceed the minimum requirements of NFPA 13 shall be incorporated into the design. Reference to "authority having jurisdiction" shall be interpreted to mean the Contracting Officer.

1.8 DELIVERY AND STORAGE

Equipment placed in storage shall be stored with protection from the weather, humidity and temperature variations, dirt and dust or other contaminants.

PART 2 PRODUCTS

2.1 GENERAL EQUIPMENT REQUIREMENTS

2.1.1 Standard Products

Materials and equipment shall be standard products of a manufacturer regularly engaged in the manufacture of such products and shall essentially duplicate items that have been in satisfactory use for at least 2 years prior to bid opening.

2.1.2 Requirements for Fire Protection Service

Equipment and materials shall have been tested by Underwriters Laboratories, Inc. and listed in UL Fire Prot Dir or approved by Factory Mutual and listed in FM P7825a and FM P7825b. Where the terms "listed" or

"approved" appear in this specification, such shall mean listed in UL Fire Prot Dir or FM P7825a and FM P7825b

2.1.3 Nameplates

Major components of equipment shall have the manufacturer's name, address, type or style, model or serial number, and catalog number on a plate permanently affixed to the item of equipment.

2.2 UNDERGROUND PIPING SYSTEMS

2.2.1 Pipe

Piping from a point 6 inches above the floor to a point 5 feet outside the building wall [the point of connection to the existing water mains] shall be ductile iron with a rated working pressure of 1725 kPa (250psi) conforming to AWWA ANSI/AWWA C151/A21.51, with cement mortar lining conforming to AWWA ANSI/AWWA C104/A21.4. Piping more than 5 feet outside the building walls shall comply with Section 02510 WATER DISTRIBUTION SYSTEM.

2.2.2 Fittings and Gaskets

Fittings shall be ductile iron conforming to AWWA ANSI/AWWA C110/A21.10. Gaskets shall be suitable in design and size for the pipe with which such gaskets are to be used. Gaskets for ductile iron pipe joints shall conform to AWWA ANSI/AWWA C111/A21.11.

2.2.3 Gate Valve and Indicator Posts

Gate valves for underground installation shall be of the inside screw type with counter-clockwise rotation to open. Where indicating type valves are shown or required, indicating valves shall be gate valves with an approved indicator post of a length to permit the top of the post to be located 3 feet above finished grade. Gate valves and indicator posts shall be listed in UL Fire Prot Dir or FM P7825a and FM P7825b.

2.3 ABOVEGROUND PIPING SYSTEMS

Aboveground piping shall be steel or copper.

2.3.1 Steel Piping System

2.3.1.1 Steel Pipe

Except as modified herein, steel pipe shall be black as permitted by NFPA 13 and shall conform to applicable provisions of ASTM A 795, ASTM A 53, or ASTM A 135. Pipe in which threads or grooves are cut shall be Schedule 40 or shall be listed by Underwriters' Laboratories to have a corrosion resistance ratio (CRR) of 1.0 or greater after threads or grooves are cut. Pipe shall be marked with the name of the manufacturer, kind of pipe, and ASTM designation.

2.3.1.2 Fittings for Non-Grooved Steel Pipe

Fittings shall be cast iron conforming to ASME B16.4, steel conforming to ASME B16.9 or ASME B16.11, or malleable iron conforming to ASME B16.3. Steel press fittings shall be approved for fire protection systems. Fittings into which sprinklers, drop nipples or riser nipples (sprigs) are

screwed shall be threaded type. Plain-end fittings with mechanical couplings, fittings which use steel gripping devices to bite into the pipe and segmented welded fittings shall not be used.

2.3.1.3 Grooved Mechanical Joints and Fittings

Joints and fittings shall be designed for not less than 175 psi service and shall be the product of the same manufacturer. Fitting and coupling houses shall be malleable iron conforming to ASTM A 47, Grade 32510; ductile iron conforming to ASTM A 536, Grade 65-45-12. Gasket shall be the flush type that fills the entire cavity between the fitting and the pipe. Nuts and bolts shall be heat-treated steel conforming to ASTM A 183 and shall be cadmium plated or zinc electroplated.

2.3.1.4 Flanges

Flanges shall conform to NFPA 13 and ASME B16.1. Gaskets shall be non-asbestos compressed material in accordance with ASME B16.21, 1/16 inch thick, and full face or self-centering flat ring type. Bolts shall be squarehead conforming to ASME B18.2.1 and nuts shall be hexagon type conforming to ASME B18.2.2.

2.3.2 Copper Tube Systems

2.3.2.1 Copper Tube

Copper tube shall conform to ASTM B 88, Types L and M.

2.3.2.2 Copper Fittings

Cast copper alloy pressure fittings shall conform to ASME B16.18 and wrought copper and bronze pressure fittings shall conform to ASME B16.22.

2.3.3 Not Used

2.3.4 Pipe Hangers

Hangers shall be listed in UL Fire Prot Dir or FM P7825a and FM P7825b and of the type suitable for the application, construction, and pipe type and sized involved.

2.3.5 Valves

2.3.5.1 Control Valve and Gate Valve

Manually operated sprinkler control valve and gate valve shall be outside stem and yoke (OS&Y) type and shall be listed in UL Bld Mat Dir or FM P7825a and FM P7825b.

2.3.5.2 Check Valve

Check valve 2 inches and larger shall be listed in UL Bld Mat Dir or FM P7825a and FM P7825b. Check valves 4 inchesand larger shall be of the swing type with flanged cast iron body and flanged inspection plates, shall have a clear waterway and shall meet the requirements of MSS SP-71, for Type 3 or 4.

2.3.5.3 Hose Valve

Valve shall comply with UL 668 and shall have a minimum rating of 2070 kPa (300 psi). Valve shall be non-rising stem, all bronze, 90 degree angle type, with 2-1/2 inch American National Standard Fire Hose Screw Thread (NH) male outlet in accordance with NFPA 1963. Hose valve shall be provided with 2-1/2 to 1-1/2 inch reducer. Hose valves shall be equipped with lugged cap with drip drain, cap gasket and chain. Valve finish shall be polished brass.

2.4 ALARM CHECK VALVE ASSEMBLY

Assembly shall include an alarm check valve, standard trim piping, pressure gauges, bypass, retarding chamber, testing valves, main drain, and other components as required for a fully operational system.

2.5 WATER MOTOR ALARM ASSEMBLY

Assembly shall include a body housing, impeller or pelton wheel, drive shaft, striker assembly, gong, wall plate and related components necessary for complete operation. Minimum 3/4 inch galvanized piping shall be provided between the housing and the alarm check valve. Drain piping from the body housing shall be minimum 1 inch galvanized and shall be arranged to drain to the outside of the building. Piping shall be galvanized both on the inside and outside surfaces.

2.6 ALARM INITIATING AND SUPERVISORY DEVICES

2.6.1 Sprinkler Waterflow Indicator Switch, Vane Type

Switch shall be vane type with a pipe saddle and cast aluminum housing. The electro-mechanical device shall include a flexible, low-density polyethylene paddle conforming to the inside diameter of the fire protection pipe. The device shall sense water movements and be capable of detecting a sustained flow of 10 gpm or greater. The device shall contain a retard device adjustable from 0 to 90 seconds to reduce the possibility of false alarms caused by transient flow surges. The switch shall include two SPDT (Form C) contacts, and shall be equipped with a silicone rubber gasket to assure positive water seal and a dustproof cover and gasket to seal the mechanism from dirt and moisture.

2.6.2 Sprinkler Pressure (Waterflow) Alarm Switch

Pressure switch shall include a metal housing with a neoprene diaphragm, SPDT snap action switches and a 1/2 inch NPT male pipe thread. The switch shall have a maximum service pressure rating of 175 psi. There shall be two SPDT (Form C) contacts factory adjusted to operate at 4 to 8 psi. The switch shall be capable of being mounted in any position in the alarm line trim piping of the alarm check valve.

2.6.3 Valve Supervisory (Tamper) Switch

Switch shall be suitable for mounting to the type of control valve to be supervised open. The switch shall be tamper resistant and contain one set of SPDT (Form C) contacts arranged to transfer upon removal of the housing cover or closure of the valve of more than two rotations of the valve stem.

2.7 FIRE DEPARTMENT CONNECTION

Fire department connection shall be projecting type with cast brass body, matching wall escutcheon lettered "Auto Spkr" with a polished brass finish.

The connection shall have two inlets with individual self-closing clappers, caps with drip drains and chains. Female inlets shall have 2-1/2 inch diameter American National Fire Hose Connection Screw Threads (NH) per NFPA 1963.

2.8 SPRINKLERS

Sprinklers shall be used in accordance with their listed spacing limitations. Temperature classification shall be ordinary orintermediateas indicated on drawings. Sprinklers in high heat areas including attic spaces or in close proximity to unit heaters shall have temperature classification in accordance with NFPA 13. Sprinklers with internal O-rings shall not be used.

2.8.1 Upright Sprinkler

Upright sprinkler shall be brass and shall have a nominal 1/2 inch or 17/32 inch orifice.

2.8.2 Pendent Sprinkler

Pendent sprinkler shall be of the fusible strut or glass bulb type, recessed type with nominal 1/2 inch [or 17/32 inch] orifice. Pendent sprinklers shall have a polished chrome finish.

2.8.3 Sidewall Sprinkler

Sidewall sprinkler shall have a nominal 1/2 inchorifice. Sidewall sprinkler shall have a polished chrome finish. Sidewall sprinkler shall be the quick-response type.

2.8.4 Residential Sprinkler

Residential sprinkler shall be the pendentandsidewall type with nominal 1/2 inch orifice. Residential sprinkler shall have a polished chromefinish.

2.9 DISINFECTING MATERIALS

2.9.1 Liquid Chlorine

Liquid chlorine shall conform to AWWA B301.

2.9.2 Hypochlorites

Calcium hypochlorite and sodium hypochlorite shall conform to AWWA B300.

2.10 ACCESSORIES

2.10.1 Sprinkler Cabinet

Spare sprinklers shall be provided in accordance with NFPA 13 and shall be packed in a suitable metal or plastic cabinet. Spare sprinklers shall be representative of, and in proportion to, the number of each type and temperature rating of the sprinklers installed. At least one wrench of each type required shall be provided.

2.10.2 Pendent Sprinkler Escutcheon

Escutcheon shall be one-piece metallic type with a depth of less than 3/4

inch and suitable for installation on pendent sprinklers. The escutcheon shall have a factory finish that matches the pendent sprinkler heads.

2.10.3 Pipe Escutcheon

Escutcheon shall be polished chromium-plated zinc alloy, or polished chromium-plated copper alloy. Escutcheons shall be either one-piece or split-pattern, held in place by internal spring tension or set screw.

2.10.4 Sprinkler Guard

Guard shall be a steel wire cage designed to encase the sprinkler and protect it from mechanical damage. Guards shall be provided on sprinklers located in Mechanical Equipment Room.

2.10.5 Identification Sign

Valve identification sign shall be minimum 6 inches wide x 2 inches high with enamel baked finish on minimum 18 gauge steel or 0.024 inch aluminum with red letters on a white background or white letters on red background. Wording of sign shall include, but not be limited to "main drain," "auxiliary drain," "inspector's test," "alarm test," "alarm line," and similar wording as required to identify operational components.

2.11 Not Used

2.12 DOUBLE-CHECK VALVE BACKFLOW PREVENTION ASSEMBLY

Double-check backflow prevention assembly shall comply with ASSE 1015. The assembly shall have a bronze, cast-iron or stainless steel body with flanged ends. The assembly shall include OS&Y shutoff valves on the inlet and outlet, 2-positive-seating check valve for continuous pressure application, and four test cocks. Assemblies shall be rated for working pressure of 862 kPa (125 psi). The maximum pressure loss shall be 6 psi at a flow rate equal to the sprinkler water demand, at the location of the assembly.

PART 3 EXECUTION

3.1 INSTALLATION REQUIREMENTS

The installation shall be in accordance with the applicable provisions of NFPA 13, NFPA 24 and publications referenced therein. Installation of in-rack sprinklers shall comply with applicable provisions of NFPA 231C.

3.2 ABOVEGROUND PIPING INSTALLATION

Piping shall be run straight and bear evenly on hangers and supports.

3.2.1 Protection of Piping Against Earthquake Damage

Protection of piping from earthquake damage is not required.

3.2.2 Piping in Exposed Areas

Exposed piping shall be installed so as not to diminish exit access widths, corridors or equipment access. Exposed horizontal piping, including drain piping, shall be installed to provide maximum headroom.

3.2.3 Piping in Finished Areas

In areas with suspended or dropped ceilings and in areas with concealed spaces above the ceiling, piping shall be concealed above ceilings. Piping shall be inspected, tested and approved before being concealed. Risers and similar vertical runs of piping in finished areas shall be concealed.

3.2.4 Pendent Sprinklers

Drop nipples to pendent sprinklers shall consist of minimum 1 inch pipe with a reducing coupling into which the sprinkler shall be threaded. Hangers shall be provided on arm-overs to drop nipples supplying pendent sprinklers when the arm-over exceeds 12 inches. Where sprinklers are installed below suspended or dropped ceilings, drop nipples shall be cut such that sprinkler ceiling plates or escutcheons are of a uniform depth throughout the finished space. The outlet of the reducing coupling shall not extend more than 1 inch below the underside of the ceiling. On pendent sprinklers installed below suspended or dropped ceilings, the distance from the sprinkler deflector to the underside of the ceiling shall not exceed 4 inches. Recessed pendent sprinklers shall be installed such that the distance from the sprinkler deflector to the underside of the ceiling shall not exceed the manufacturer's listed range and shall be of uniform depth throughout the finished area.

3.2.4.1 Pendent Sprinkler Locations

Pendent sprinklers in suspended ceilings shall be a minimum of 6 inches from ceiling grid.

3.2.5 Upright Sprinklers

Riser nipples or "sprigs" to upright sprinklers shall contain no fittings between the branch line tee and the reducing coupling at the sprinkler. Riser nipples exceeding 30 inches in length shall be individually supported.

3.2.6 Pipe Joints

Pipe joints shall conform to NFPA 13, except as modified herein. Not more than four threads shall show after joint is made up. Welded joints will be permitted, only if welding operations are performed as required by NFPA 13 at the Contractor's fabrication shop, not at the project construction site. Flanged joints shall be provided where indicated or required by NFPA 13. Grooved pipe and fittings shall be prepared in accordance with the manufacturer's latest published specification according to pipe material, wall thickness and size. Grooved couplings and fittings shall be from the same manufacturer.

3.2.7 Reducers

Reductions in pipe sizes shall be made with one-piece tapered reducing fittings. The use of grooved-end or rubber-gasketed reducing couplings will not be permitted. When standard fittings of the required size are not manufactured, single bushings of the face type will be permitted. Where used, face bushings shall be installed with the outer face flush with the face of the fitting opening being reduced. Bushings shall not be used in elbow fittings, in more than one outlet of a tee, in more than two outlets of a cross, or where the reduction in size is less than 1/2 inch.

3.2.8 Pipe Penetrations

Cutting structural members for passage of pipes or for pipe-hanger fastenings will not be permitted. Pipes that must penetrate concrete or masonry walls or concrete floors shall be core-drilled and provided with pipe sleeves. Each sleeve shall be Schedule 40 galvanized steel, ductile iron or cast iron pipe and shall extend through its respective wall or floor and be cut flush with each wall surface. Sleeves shall provide required clearance between the pipe and the sleeve per NFPA 13. The space between the sleeve and the pipe shall be firmly packed with mineral wool insulation. Where pipes pass through fire walls, fire partitions, or floors, a fire seal shall be placed between the pipe and sleeve in accordance with Section 07840 FIRESTOPPING. In penetrations which are not fire-rated or not a floor penetration, the space between the sleeve and the pipe shall be sealed at both ends with plastic waterproof cement which will dry to a firm but pliable mass or with a mechanically adjustable segmented elastomer seal.

3.2.9 Escutcheons

Escutcheons shall be provided for pipe penetration of ceilings and walls. Escutcheons shall be securely fastened to the pipe at surfaces through which piping passes.

3.2.10 Inspector's Test Connection

Unless otherwise indicated, test connection shall consist of 1 inch pipe connected to the remote branch line; a test valve located approximately 7 feet above the floor; a smooth bore brass outlet equivalent to the smallest orifice sprinkler used in the system; and a painted metal identification sign affixed to the valve with the words "Inspector's Test." The discharge orifice shall be located outside the building wall directed so as not to cause damage to adjacent construction or landscaping during full flow discharge.

3.2.11 Drains

Main drain piping shall be provided to discharge at the floor drainlocation indicated. Auxiliary drains shall be provided as required by NFPA 13 except that drain valves shall be used where drain plugs are otherwise permitted. Where branch lines terminate at low points and form trapped sections, such branch lines shall be manifolded to a common drain line.

3.2.12 Installation of Fire Department Connection

Connection shall be mounted [on the exterior wall approximately 3 feet above finished grade] [as shown]. The piping between the connection and the check valve shall be provided with an automatic drip in accordance with NFPA 13 and arranged to drain to the outside.

3.2.13 Identification Signs

Signs shall be affixed to each control valve, inspector test valve, main drain, auxiliary drain, test valve, and similar valves as appropriate or as required by NFPA 13. Hydraulic design data nameplates shall be permanently affixed to each sprinkler riser as specified in NFPA 13.

3.3 UNDERGROUND PIPING INSTALLATION

The fire protection water main shall be laid, and joints anchored, in accordance with NFPA 24. Minimum depth of cover shall be 1968 mm (6.5 feet). The supply line shall terminate inside the building with a flanged piece, the bottom of which shall be set not less than 6 inches above the finished floor. A blind flange shall be installed temporarily on top of the flanged piece to prevent the entrance of foreign matter into the supply line. A concrete thrust block shall be provided at the elbow where the pipe turns up toward the floor. In addition, joints shall be anchored in accordance with NFPA 24 using pipe clamps and steel rods from the elbow to the flange above the floor and from the elbow to a pipe clamp in the horizontal run of pipe. Buried steel components shall be provided with a corrosion protective coating in accordance with AWWA C203. Piping more than 5 feet outside the building walls shall meet the requirements of Section 02510 WATER DISTRIBUTION SYSTEM.

3.4 EARTHWORK

Earthwork shall be performed in accordance with applicable provisions of Section 02315 EXCAVATION, FILLING AND BACKFILLING FOR BUILDINGS.

3.5 ELECTRICAL WORK

Alarm signal wiring connected to the building fire alarm control system shall be in accordance with Section 13850 FIRE DETECTION AND ALARM SYSTEM.DIRECT CURRENT LOOP and 13851FIRE DETECTION AND ALARM SYSTEM,ADDRESSABLE.Wiring color code shall remain uniform throughout the system.

3.6 DISINFECTION

After all system components are installed and hydrostatic test are successfully completed, each portion of the sprinkler system to be disinfected shall be thoroughly flushed with potable water until all entrained dirt and other foreign materials have been removed before introducing chlorinating material. Flushing shall be conducted by removing the flushing fitting of the cross mains and of the grid branch lines, and then back-flushing through the sprinkler main drains. The chlorinating material shall be hypochlorites or liquid chlorine. Water chlorination procedure shall be in accordance with AWWA M20. The chlorinating material shall be fed into the sprinkler piping at a constant rate of 50 parts per million (ppm). A properly adjusted hypochlorite solution injected into the system with a hypochlorinator, or liquid chlorine injected into the system through a solution-fed chlorinator and booster pump shall be used. Chlorination application shall continue until the entire system if filled. The water shall remain in the system for a minimum of 24 hours. Each valve in the system shall be opened and closed several times to ensure its proper disinfection. Following the 24-hour period, no less than 25 ppm chlorine residual shall remain in the system. The system shall then be flushed with clean water until the residual chlorine is reduced to less than one part per million. Samples of water in properly disinfected containers for bacterial examination will be taken from several system locations which are approved by the Contracting Officer. Samples shall be tested for total coliform organisms (coliform bacteria, fecal coliform, streptococcal, and other bacteria) in accordance with AWWA-01. The testing method shall be either the multiple-tube fermentation technique or the membrane-filter technique. The disinfection shall be repeated until tests indicate the absence of coliform organisms (zero mean coliform density per 100 milliliters) in the samples for at least 2 full days. The system will not be accepted until satisfactory bacteriological results have been obtained.

3.7 FIELD PAINTING AND FINISHING

Field painting and finishing are specified in Section 09900 PAINTING, GENERAL.

3.8 PRELIMINARY TESTS

The system, including the underground water mains, and the aboveground piping and system components, shall be tested to assure that equipment and components function as intended. The underground and aboveground interior piping systems and attached appurtenances subjected to system working pressure shall be tested in accordance with NFPA 13 and NFPA 24. Upon completion of specified tests, the Contractor shall complete certificates as specified in paragraph SUBMITTALS.

3.8.1 Underground Piping

3.8.1.1 Flushing

Underground piping shall be flushed in accordance with NFPA 24. This includes the requirement to flush the lead-in connection to the fire protection system at a flow rate not less that the calculated maximum water demand rate of the system.

3.8.1.2 Hydrostatic Testing

New underground piping shall be hydrostatically tested in accordance with NFPA 24. The allowable leakage shall be measured at the specified test pressure by pumping from a calibrated container. The amount of leakage at the joints shall not exceed 2 quarts per hour per 100 gaskets or joints, regardless of pipe diameter.

3.8.2 Aboveground Piping

3.8.2.1 Hydrostatic Testing

Aboveground piping shall be hydrostatically tested in accordance with NFPA 13 at not less than 200 psi or 50 psi in excess of maximum system operating pressure and shall maintain that pressure without loss for 2 hours. There shall be no drop in gauge pressure or visible leakage when the system is subjected to the hydrostatic test. The test pressure shall be read from a gauge located at the low elevation point of the system or portion being tested.

3.8.3 Testing of Alarm Devices

Each alarm switch shall be tested by flowing water through the inspector's test connection. Each water-operated alarm devices shall be tested to verify proper operation.

3.8.4 Main Drain Flow Test

Following flushing of the underground piping, a main drain test shall be made to verify the adequacy of the water supply. Static and residual pressures shall be recorded on the certificate specified in paragraph SUBMITTALS. In addition, a main drain test shall be conducted each time after a main control valve is shut and opened.

3.9 FINAL ACCEPTANCE TEST

A technician employed by the installing Contractor shall be present for the final tests and shall provide a complete demonstration of the operation of the system. This shall include operation of control valves and flowing of inspector's test connections to verify operation of associated waterflow alarm switches. After operation of control valves has been completed, the main drain test shall be repeated to assure that control valves are in the open position. In addition, the representative shall have available copies of as-built drawings and certificates of tests previously conducted. The installation shall not be considered accepted until identified discrepancies have been corrected and test documentation is properly completed and received.

-- End of Section --

SECTION TABLE OF CONTENTS

DIVISION 14 - CONVEYING SYSTEMS

SECTION 14240

ELEVATORS, HYDRAULIC

10/93

PART 1 GENERAL

1.1 REFERENCES
1.2 SUBMITTALS
1.3 QUALIFICATIONS
1.4 REGULATORY REQUIREMENTS
1.4.1 Not Used
1.4.2 Phase Two Elevator Schedule
1.5 DESIGNATED LANDING
1.6 DELIVERY AND STORAGE
1.7 FIELD MEASUREMENTS
1.8 WARRANTY

PART 2 PRODUCTS

2.1 GENERAL EQUIPMENT REQUIREMENTS
2.1.1 Standard Products
2.1.2 Nameplates
2.1.3 Special Tools
2.1.4 Electrical Work
2.1.5 Use of Asbestos Products
2.2 MISCELLANEOUS MATERIALS
2.2.1 Materials for Car Enclosures
2.2.2 Structural Steel
2.2.3 Cold-Rolled Sheet Steel
2.2.4 Stainless Steel
2.3 PASSENGER ELEVATOR CAR
2.3.1 Car Fronts
2.3.2 Car Doors
2.3.3 Car Platform
2.3.4 Sling
2.3.5 Walls
2.3.6 Car Top, Ceiling and Light Fixtures
2.3.7 Emergency Exit
2.3.8 Floor Finish
2.3.9 Base
2.3.10 Handrails
2.3.11 Exhaust Fan
2.3.12 Communications
2.3.13 Car Emergency Lighting System
2.3.13.1 Power Pack
2.3.13.2 Emergency Light Fixture
2.3.13.3 Remote Light Fixture
2.3.14 Protection Pads
2.3.15 Certificate Frame
2.3.16 Car Guide Shoes

2.4 PASSENGER ELEVATOR HOISTWAY ENTRANCES
2.4.1 Hoistway Doors
2.4.2 Hoistway Frames
2.4.3 Symbols
2.4.4 Sills
2.4.5 Strut Angles
2.4.6 Door Hangers and Housing
2.4.7 Door Rollers
2.4.8 Hanger Track
2.4.9 Covers and Guards
2.5 PASSENGER ELEVATOR DOOR OPERATION
2.6 PASSENGER ELEVATOR OPERATING AND SIGNAL FIXTURES
2.6.1 General
2.6.2 Car Operating Panel
2.6.3 Not Used
2.6.4 Hall-Call Station
2.6.4.1 Not Used
2.6.4.2 Fire-Service Switch
2.6.4.3 Hoistway Vent Key Switch
2.6.5 Direction Lanterns
2.6.6 In-Car Car-Position Indicator
2.6.7 Audible Signals
2.6.8 Combination Hall-Position Indicator and Directional Arrows
2.7 Not Used
2.8 Not Used
2.9 PASSENGER CAR OPERATION (DUPLEX SELECTIVE/COLLECTIVE)
2.10 Not Used
2.11 Not Used
2.12 Not Used
2.13 Not Used
2.14 Not Used
2.15 AUTOMATIC EMERGENCY POWER OPERATION
2.16 AUTOMATIC ELEVATOR OPERATION
2.16.1 General
2.16.2 Operation
2.16.2.1 Door Closing
2.16.2.2 Door Opening
2.16.2.3 Car Dispatch
2.16.2.4 Door Dwell-Time
2.16.3 Not Used
2.16.4 Automatic Load Weighing
2.16.5 Not Used
2.16.6 Door Operation
2.16.7 Automatic Power Shutdown
2.17 Not Used
2.18 Not Used
2.19 Not Used
2.20 COMMUNICATIONS LINKS OVER VOLTAGE PROTECTION Not Used
2.21 FIREFIGHTERS SERVICE
2.22 ELEVATOR POWER UNIT
2.22.1 Pumping and Control Mechanism
2.22.1.1 Oil Temperature Device
2.22.1.2 Pump
2.22.1.3 Piping
2.22.1.4 Motor
2.22.1.5 Oil-Control Unit
2.22.1.6 Storage Tank
2.22.1.7 Controller
2.23 LEVELING DEVICE

2.24 JACK UNIT
2.25 ELEVATOR SUPPORTS
2.26 BUFFERS
2.27 LUBRICATION POINTS

PART 3 EXECUTION

3.1 INSTALLATION
3.2 FIELD WELDING
3.3 CASING, CYLINDER AND PLUNGER UNIT
3.4 ELEVATOR WIRING
3.4.1 Traveling Cables
3.5 PAINTING
3.6 TESTING
3.6.1 Testing Period
3.6.2 Speed Load Testing
3.6.3 Car Leveling Testing
3.6.4 Temperature Rise Testing
3.6.5 Insulation-Resistance Testing
3.7 FRAMED INSTRUCTIONS
3.8 OPERATOR TRAINING

-- End of Section Table of Contents --

SECTION 14240

ELEVATORS, HYDRAULIC
10/93

PART 1 GENERAL

1.1 REFERENCES

The publications listed below form a part of this specification to the extent referenced. The publications are referred to in the text by basic designation only.

AMERICAN SOCIETY FOR TESTING AND MATERIALS (ASTM)

ASTM A 53	(1997) Pipe, Steel, Black and Hot-Dipped, Zinc-Coated, Welded and Seamless
ASTM A 106	(1997a) Seamless Carbon Steel Pipe for High-Temperature Service
ASTM A 176	(1996) Stainless and Heat-Resisting Chromium Steel Plate, Sheet, and Strip
ASTM A 366/A 366M	(1996) Steel, Sheet, Carbon, Cold-Rolled, Commercial Quality
ASTM A 568/A 568M	(1997) Steel, Sheet, Carbon, and High-Strength, Low-Alloy, Hot-Rolled and Cold-Rolled, General Requirements for
ASTM A 569/A 569M	(1997) Steel, Carbon (0.15 Maximum, Percent), Hot-Rolled Sheet and Strip Commercial Quality
ASTM D 92	(1996) Flash and Fire Points by Cleveland Open Cup (IP 36/84 (89))
ASTM E 84	(1996a) Surface Burning Characteristics of Building Materials

ASME INTERNATIONAL (ASME)

ASME A17.1	(1996) Safety Code for Elevators and Escalators
ASME A17.2.2	(1994) Inspectors' Manual for Hydraulic Elevators
ASME B16.11	(1991) Forged Fittings, Socket-Welding and Threaded
ASME B31.1	(1995; B31.1a; B31.1b; B31c) Power Piping

CODE OF FEDERAL REGULATIONS (CFR)

36 CFR 1191	Americans with Disabilities Act (ADA) Accessibility Guidelines for Buildings and Facilities

FEDERAL STANDARDS (FED-STD)

FED-STD 795	(Basic) Uniform Federal Accessibility Standards

NATIONAL ELECTRICAL MANUFACTURERS ASSOCIATION (NEMA)

NEMA LD 3	(1995) High-Pressure Decorative Laminates
NEMA MG 1	(1993; Rev 1; Rev 2; Rev 3) Motors and Generators

NATIONAL FIRE PROTECTION ASSOCIATION (NFPA)

NFPA 70	(1999) National Electrical Code
NFPA 252	(1995) Fire Tests of Door Assemblies

1.2 SUBMITTALS

Government approval is required for submittals with a "GA" designation. Submittals having an "FIO" designation are for information only. The following shall be submitted in accordance with Section 01330 SUBMITTAL PROCEDURES:

SD-01 Data

Elevator System; FIO.

A complete list of equipment and material, including illustrations, schedules, manufacturer's descriptive data and technical literature, performance charts, catalog cuts, installation instructions, brochures, diagrams, and other information required for fabrication and installation of the equipment. Data shall include calculations for reaction loads imposed on building by elevator systems. Certified copies of list reports may be submitted in lieu of calculations. Calculations to demonstrate compliance with ASME A17.1, Rule XXIV shall be included. Spare parts data for each different item of material and equipment specified, after approval of detail drawings and not later than two weeks prior to date of beneficial occupancy. Data shall include a complete list of parts and supplies, with current unit prices and source of supply, and a list of parts recommended to be replaced and replacement interval required. Data shall include appropriate sizing of electrical protective devices.

SD-04 Drawings

Elevator System; GA1.

Detail drawings including dimensioned layouts in plan and elevation showing the arrangement of elevator equipment, anchorage of equipment, clearances for maintenance and operation; and details on hoistway, doors and frames, operation and signal stations, controllers, motors, guide rails and brackets, cylinder and plunge unit, and points of interface with normal power fire alarm system and interface with emergency power systems. Drawings shall show any revised building electrical system required to make

supplied elevator system function as specified. Drawings shall contain complete wiring diagrams showing electrical connections and other details required to demonstrate sequence of operation and functions of system devices. Drawings shall include the appropriate sizing of electrical protective devices which are frequently different from National Electrical Code standard sizes.

SD-06 Instructions

Framed Instructions; FIO.

Diagrams, instructions, and other sheets proposed for posting.

SD-08 Statements

Qualification Certificates; FIO.

Certificates of experience of elevator mechanics employed to install, supervise and test the elevator shall certify mechanics to have not less than 5 years experience installing, supervising and testing elevators of the type and rating specified. Certificate shall certify that elevator system installer is acceptable to elevator manufacturer prior to installation of elevators.

SD-09 Reports

Testing; FIO.

Test reports in booklet form showing all field tests performed to adjust each component and all field tests performed to prove compliance with the specified performance criteria, upon completion and testing of installed system.

SD-14 Samples

Finishes; GA1.

Two Samples of materials and products requiring color or finish selection.

SD-18 Records

Test Procedures; GA

A plan detailing the testing procedures shall be submitted 60 days prior to performing the elevator tests.

SD-19 Operation and Maintenance Manuals

Elevator System; GA.

Four copies of operation manual outlining the step-by-step procedures for system startup, operation and shutdown. Manuals shall include manufacturer's name, model number, service manual, parts list and brief description of all equipment, including basic operating features. Four copies of maintenance manual listing routine maintenance procedures, possible breakdowns and repairs, and troubleshooting guides. Manuals shall include equipment layout and complete wiring and control diagrams of the system as installed. Operation and maintenance manuals shall be approved prior to training course.

1.3 QUALIFICATIONS

Hydraulic elevators shall be pre-engineered elevator systems, and provided by a company regularly engaged in the manufacture of elevator systems. The manufacturer shall either install the elevator system or provide letter of endorsement certifying that the elevator-system installer is acceptable to the manufacturer.

1.4 REGULATORY REQUIREMENTS

Design and fabrication shall be in accordance with ASME A17.1. Each car shall have the capacity to lift a live load, exclusive of the car, at a speed as specified in the following schedule. The approximate travel, terminal floors, number of stops and openings, and the car sizes shall be as shown in the schedule. The elevators shall serve the floors with stops and openings in accordance with the requirements indicated. Elevators shall provide accessibility and usability for physically handicapped in accordance with the requirements for the handicapped in FED-STD 795 and 36 CFR 1191 Elevators shall be installed and tested in accordance with the State of Minnesota Rules and Codes: CHAPTER 1307 - Elevators and Related Devices Code.

1.4.1 Not Used

1.4.2 Phase Two Elevator Schedule

Elevators No. 2 & 3:

Service:	Passenger
Capacity:	1588 kg (3500 pounds)
Speed:	0.75 m/s (150 fpm) (full load up) 0.75 m/s (150 fpm) (downspeed)
Platform Size:	2100 mm (7'-0") wide by 1875 mm (6'-3") deep
Clear Car Inside	2100 mm (6'-8") wide by 1625 mm (5'-5") deep
Net Travel:	Elevator #2 9650 mm (42'-10") Elevator #3 9650 mm (32'-2")
Landings:	4 at Elevator #2 3 at Elevator #3
Openings: Front	42"
Openings: Rear	42" @ Elevator #2 (Basement Level)
Entrance Type:	Single-speed, side opening Horizontal-sliding

1.5 DESIGNATED LANDING

For the purposes of firefighter's service and emergency operations, as required by Section 211, ASME A17.1, the designated landing or level shall be the first floor. The alternate landing or level shall be the second floor.

1.6 DELIVERY AND STORAGE

All equipment delivered and placed in storage shall be stored with protection from the weather, excessive humidity and excessive temperature variations; and dirt, or other contaminants.

1.7 FIELD MEASUREMENTS

The Contractor shall become familiar with all details of the work, verify all dimensions in the field and advise the Contracting Officer of any discrepancy before performing any work.

1.8 WARRANTY

Warranty service shall be provided for each elevator for a period of 12 months after date of acceptance by Contracting Officer. Warranty service shall be performed only by trained elevator mechanics during regular working hours and shall include manufacturer's warranty requirements including but not limited to adjusting, lubricating and cleaning of equipment and furnishing supplies and parts to keep elevator in operation, except such parts made necessary by misuse, accident or negligence not caused by the Contractor. Testing and adjustments shall be in accordance with the applicable provisions of ASME A17.1 and ASME A17.2.2. Emergency callback service shall be included and available 24 hours a day, 7 days per week, with an initial telephone response time of 4 hours and a response time of 4 hours for a mechanic to the site. Inspection and service for fire service operation shall be performed every 6 months. Documentation of inspection and testing, and certification of successful operation shall be provided with each unit.

PART 2 PRODUCTS

2.1 GENERAL EQUIPMENT REQUIREMENTS

2.1.1 Standard Products

Material and equipment shall be the standard products of manufacturers regularly engaged in the fabrication of elevators and/or elevator parts, and shall essentially duplicate items which have been in satisfactory use for at least 2 years prior to bid opening. Equipment shall be supported by a service organization that is available 24 hours a day, 7 days per week, with a response time of 4 hours.

2.1.2 Nameplates

Each major item of equipment shall have the manufacturer's name, address, type or style, model or serial number, catalog number, and electrical and mechanical characteristics on a plate secured to the item of equipment.

2.1.3 Special Tools

One set of special tools, calibration devices, and instruments required for operation, calibration, and maintenance of the equipment shall be provided.

2.1.4 Electrical Work

Changes to the electrical distribution system required for coordination with elevator equipment shall be performed and coordinated by Contractor,

at Contractor's expense. Electrical service for elevator machines shall be 120/208 volt, 60-Hertz, 3-phase, 3 wire ungrounded current. Electric service for elevator car lighting shall be 120-volt, single-phase, 60-Hertz grounded service. Electrical work shall conform to requirements in Section 16415 ELECTRICAL WORK, INTERIOR. A disconnect switch that will shut off power to the elevator car lighting shall be provided in the elevator machine room adjacent to the elevator control panel. A telephone junction box and an elevator car lighting junction box shall be provided adjacent to each controller.

2.1.5 Use of Asbestos Products

Materials and products required for manufacturing and installing elevators shall not contain asbestos.

2.2 MISCELLANEOUS MATERIALS

2.2.1 Materials for Car Enclosures

Materials for car enclosures shall meet flame spread rating 0 to 75 and smoke development 0 to 450 as tested in accordance with requirements of ASTM E 84 as established by ASME A17.1, Rule 204.2.

2.2.2 Structural Steel

Structural steel shall be hot-rolled commercial quality carbon steel, pickled, oiled, complying with ASTM A 569/A 569M and ASTM A 568/A 568M.

2.2.3 Cold-Rolled Sheet Steel

Sheet steel shall be cold-rolled commercial quality low carbon steel, Class 1, exposed matte finish, oiled, complying with ASTM A 366/A 366M and ASTM A 568/A 568M.

2.2.4 Stainless Steel

Stainless steel shall be ASTM A 176 Type 302/304, austenitic, corrosion-resistant, with grain of belting in the direction of longest dimension. Surfaces shall be smooth and without waves and shall be in compliance with ASTM A 366/A 366M.

2.3 PASSENGER ELEVATOR CAR

2.3.1 Car Fronts

Fronts for passenger elevators shall be combination door post and return panels manufactured of stainless steel provided with necessary cutouts for operating devices. Car operating panel shall be recessed into front return panel with surface-applied operating panel cover. Position indicator in front return shall be recessed with a surface-applied cover plate. Exposed stainless steel shall be finished with No. 4 Satin Finish, unless otherwise specified.

2.3.2 Car Doors

Car doors for passenger elevators shall be constructed from sheet steel with baked-on enamel finish. Each door shall be sound-deadened and reinforced to receive required operating mechanism and hardware, and have two removable door guides per panel. Seams, screws or binding strips shall

not be visible from within the car. Threshold shall be extruded aluminum with grooves for door guides. Car doors shall be equipped with a proximity-type infrared protective device having the following operation:

a. When doors are in full-open position, doors shall be unable to initiate closing if a person comes within detection zone. Detection zone moves with doors, so that if a passenger or object enters the zone after doors have begun to close, doors shall stop, then reverse to reopen. Doors shall reclose after a brief time. A passenger entering or leaving cars shall not cause doors to reopen unless doors reach a predetermined proximity to passenger.

b. After a stop is made, doors shall remain open for a time to permit passenger transfer, after which doors shall close automatically. This time interval shall be less for a car call than for a hall call or a coincident car/hall call.

c. If there is either a hall call anywhere in the group or a car call in the car in question and doors are prevented from closing for a fixed time period, door protective device shall be rendered inoperative, a buzzer shall sound in car and doors shall close at approximately half speed. Normal door operation shall resume at next landing reached by car.

2.3.3 Car Platform

Car platform for passenger elevators shall be fabricated from steel plates secured to a steel frame or plywood secured to a steel frame. Steel car platforms shall be assembled into a one-piece platform with top and bottom steel plates welded to structural steel frame and covered with felt and sound-isolation. Plywood car platform shall be thick Exposure 1 plywood secured to underside of structural steel frame with metal fire protection secured to underside of structural steel frame.

2.3.4 Sling

Sling for passenger elevators shall be constructed of heavy steel stiles properly affixed to a steel crosshead and bolster with adequate bracing members to remove all strain from car enclosure. Steel bumpers shall be furnished for fastening sling to plunger.

2.3.5 Walls

Walls for passenger elevators shall be high from floor to the underside of lighting fixtures. Side and rear removable panels shall be applied to car walls and shall be manufactured from plywood or composition board finished on front, back and edges faced with plastic laminate conforming to NEMA LD 3, general purpose type. Panels shall be mounted on car walls in a manner permitting their reversing. Panels shall be evenly spaced with not less than two panels on each side and three panels at rear with separations backed up with steel dividers with baked-on enamel finish. Vent around base shall be concealed behind removable panels. Refer to SECTION 09915 COLOR SCHEDULE for paint and plastic laminate color.

2.3.6 Car Top, Ceiling and Light Fixtures

Car top for passenger elevators shall be manufactured from sheet steel and shall be not less than (5-1/2 inches) high with drop-ceiling and light fixtures. Ceiling shall be suspended concealed frame ceiling composed of

six stainless steel panels with No. 4 Satin Finish, and concealed fluorescent perimeter lighting. Fluorescent light fixtures shall be dual lamp with quick-starting high-power factor, Class P ballasts with safety lamp guard clamps on fluorescent tubes. Light level shall average at least measured at the car threshold, with the door closed. A part of ceiling shall be removable to permit use of the emergency exit panel in top of car.

2.3.7 Emergency Exit

Car top for passenger elevators shall be manufactured with a hinged emergency exit panel of steel which opens up to clear the crosshead and car door operator. Emergency exit panel shall be hinged on counterweight side and held in place with nonremovable fastening devices at each corner, and be openable from top of car only. A minimum of two sides of exit panel shall lap exit opening by (1 inch). Exits shall be equipped with electrical contacts which will prevent operation of car when the exit door is open and cause the alarm bell to ring.

2.3.8 Floor Finish

Floor finish for passenger elevators shall be finished with carpet flooring specified in Section 09680 CARPET. Carpet material shall be laid flush with the extruded aluminum platform threshold.

2.3.9 Base

Base for passenger elevators shall be cove type stainless steel, high.

2.3.10 Handrails

Handrails for passenger elevators shall be mounted on each wall and shall comply with ASME A17.1, FED-STD 795 and 36 CFR 1191. Handrails shall be round-type stainless steel with No. 4 Satin finish..

2.3.11 Exhaust Fan

Exhaust fan for passenger elevators shall be two-speed exhaust type ventilating unit mounted in car ceiling and shall be provided with a stainless steel grille. Units shall be suitably isolated from car ceiling and shall provide at top speed of a minimum of 6 air changes per hour for car volume and car occupancy. Switches for the operation of the exhaust unit shall be located in car station locked cabinet or key-switched.

2.3.12 Communications

A telephone system in stainless steel cabinets shall be provided for passenger elevators. A vandal-resistant speaker type intercom with push-buttons to activate shall be installed in car station behind a stainless steel perforated grille and connected to a programmable auto-dialer located in machine room. Auto-dialer shall be provided with a solid-state charger unit which will automatically provide emergency power and an immediate transfer in the event of failure of normal power supply. The push-button located in car station or in separate cabinet shall be at the prescribed handicapped height and shall be identified as "EMERGENCY PHONE PUSH TO ACTIVATE". The entire communication assembly shall be approved for an elevator installation. The push button telephone shall comply with FED-STD 795 and 36 CFR 1191. The telephone communication shall not be terminated until one of the communicating parties hangs up the receiver or manually disconnects the communication link.

2.3.13 Car Emergency Lighting System

Emergency car lighting system for passenger elevators shall consist of an emergency power pack on top of the elevator and a remote lighting fixture inside elevator car located in car operating panel.

2.3.13.1 Power Pack

Power pack for emergency lighting system shall be a sealed lead-cadmium or nickel-cadmium 6-volt rechargeable batteries with solid-state controls and an integral regulating charger connected to normal power supply. Power pack unit shall contain the following:

a. Minimum diameter alarm bell connected to the elevator alarm and emergency push-button.

b. Top of car light fixture with protective wire guard.

c. Testing circuit and pilot light.

d. Low-wattage pilot light indicator.

e. Battery low-voltage disconnect.

2.3.13.2 Emergency Light Fixture

Emergency light fixture shall be located in car station inside elevator car, with flush-mounted lens and shall consist of the following:

a. A minimum of two lamps capable of providing a minimum level of illumination of at a point above the floor, in front of car station.

b. Steel fixture frame with chrome finish.

c. Frosted acrylic lens,

2.3.13.3 Remote Light Fixture

Upon interruption of normal power, remote light fixture for passenger elevators shall automatically and immediately illuminate and permit operation of alarm bell, subject to activation of emergency stop-switch or alarm button. Emergency power pack shall be capable of providing a minimum of 1 hour emergency bell operation and 4 hours of continuous illumination.

2.3.14 Protection Pads

One passenger car per elevator bank (3 total) shall be provided with wall protection pads with inconspicuous stainless steel pad hooks spaced not over (18 inches) apart near the ceiling. Pads shall be heavy-quality fire-retardant treated canvas with two layers of sewn cotton batting with metal eyelets for each pad hook. Pads shall cover entire wall surface except operating devices.

2.3.15 Certificate Frame

A stainless steel certificate frame with translucent plexiglass lens of the appropriate size to receive certificate issued by inspecting agency shall

be provided. Frame shall be engraved to show name of manufacturer, carrying capacity in and maximum number of persons allowed.

2.3.16 Car Guide Shoes

Guide shoes for passenger elevators shall be the adjustable mounting type on each side of car. Shoes shall be rigidly secured in accurate alignment at top and bottom of car frame. Flexible type sliding guide shoes shall consist of a swivel-type shoe, assembled on a metal base with provisions for self-alignment. Each shoe shall be provided with renewable gibs. Car guide shoes shall be adjustable for side play between guide rails. Renewable wearing gibs shall be fabricated from a durable plastic compound material having a low coefficient of friction and long wearing qualities. Gibs shall be the type requiring minimum rail lubrication.

2.4 PASSENGER ELEVATOR HOISTWAY ENTRANCES

2.4.1 Hoistway Doors

Hoistway doors for passenger elevators shall be designed and fabricated as part of a Class B 1-1/2 Hour fire-rated door/frame assembly to meet requirements of NFPA 252 and shall bear the label of an approved testing laboratory. Doors for passenger elevators shall be hollow metal type with plain panel design not less than thick with face sheet-steel panels, and steel cladding, with sight guards to match door finish. Each door shall be reinforced with continuous vertical members and filled with sound-deadening material. Doors shall be reinforced to accept the required operating mechanism and hardware. Doors shall have two removable door guides per panel. Seams, binding strips or screws shall not be visible from the landing. Exposed steel shall have baked-on enamel paint finish, unless otherwise specified. Color to be as specified in SECTION 09915 COLOR SCHEDULE.

2.4.2 Hoistway Frames

Hoistway frames for passenger elevators shall be designed and fabricated as part of a Class B 1-1/2 Hour fire-rated door/frame assembly to meet requirements of NFPA 252 and shall bear the label of an approved testing laboratory. Frames shall be formed sheet-steel with stainless steel cladding with head and jamb in flush alignment and corners welded and ground smooth. Head and jamb section shall be bolted assembly with bolts, washer and locking nut or lock washer. Frame assembly shall be securely fastened to the structure. Frames shall return to the wall. Combination buck and jamb frames may be provided with knockdown back flanges to permit installation in concrete walls. Exposed stainless steel shall be finished with No. 4 Satin Finish, unless otherwise specified.

2.4.3 Symbols

Raised stainless steel symbols as required by FED-STD 795 and 36 CFR 1191 of color selected, shall be provided at each floor to indicate the floor location. Symbols shall be attached with concealed fasteners. Symbols shall be placed in a location which can be seen by passenger from the opened passenger elevator doors.

2.4.4 Sills

Sills for passenger elevators shall be extruded aluminum with slip-resistant surface and machined grooves for door guides, secured to

floor beams.

2.4.5 Strut Angles

Strut angles for passenger elevators shall be structural steel of size not less than extending from sill to beam above and anchored to building structure with structural steel fastenings and bracings of structural members with a cross section of not less than strut angles.

2.4.6 Door Hangers and Housing

Each door panel shall be provided with not less than two sheave-type hangers designed for required door operation. Hanger housing and support shall be fabricated from formed Z-shaped steel angles of size not less than thick bolted to strut angles.

2.4.7 Door Rollers

Door rollers shall be constructed with grease-packed ball-bearings and shall be tired with a sound-reducing material. Diameter of rollers shall not be less than for car doors and not less than for hoistway doors. Upward thrust shall be taken by a hardened and ground ball-bearing roller assembled on an eccentric stud to provide adjustment.

2.4.8 Hanger Track

Hanger track shall be of high carbon cold-drawn steel, round at top to receive door rollers, round at bottom to receive up-thrust rollers, of size engineered to accommodate load requirements.

2.4.9 Covers and Guards

Hanger covers, dust covers, toe guards and fascia plate shall be fabricated from reinforced steel and finished with baked-enamel. Hanger covers shall extend the full door travel and shall be mounted in sections for ease of servicing door hangers. Dust covers shall be provided over top terminal landing door only and shall be secured to hanger housing and building structure. Toe guards shall be secured to sill. Fascia plates shall be provided between each door hanger housing and sill.

2.5 PASSENGER ELEVATOR DOOR OPERATION

Car and hoistway doors for passenger elevators shall be operated simultaneously by an electric-power door operator. Doors shall operate smoothly in the opening direction and closing direction and be electrically cushioned to stop at both the full-open and full-closed position. Operators shall be high-speed heavy-duty type which will provide an average door-opening speed of When on automatic operation door-closing time shall not exceed 10 seconds and door-closing force shall not exceed 30 pounds. Reversal of doors when closing shall be accomplished by the "DOOR OPEN" button, car door safety edge, or interruption of the photoelectric light beams. Doors shall be arranged so that doors can be opened manually in the event of power failure.

2.6 PASSENGER ELEVATOR OPERATING AND SIGNAL FIXTURES

2.6.1 General

Elevator fixtures and panels for passenger elevators shall be constructed

of in swing return of stainless steel. Fastenings for all exposed fixtures shall be secured with tamper-proof spanner-head screws of same material and finish as fixture. Hall and car call-buttons shall be the call-register type with a low-voltage power supply not to exceed 48 volts. Pressure on a button shall illuminate button to indicate that a call in the desired direction has been registered. Car and hall fixtures shall be designed and located at the prescribed height to accommodate the handicapped in accordance with FED-STD 795 and 36 CFR 1191 for passenger elevators only. Handicapped markings shall be integral with faceplates in accordance with FED-STD 795 and 36 CFR 1191. Surface-applied markings are not acceptable. Engraving shall be black-filled except for fire-service identification which shall be red-filled. Operating and signal fixture contacts and lamps shall be completely enclosed in steel boxes finished with a baked-enamel. Boxes for hall landing devices shall be equipped for proper adjustment to wall. Lamps shall be installed in light-tight compartments. Replacement bulbs shall be readily available from three sources.

2.6.2 Car Operating Panel

Car operating panel for passenger elevators shall be provided with the necessary raised markings for the handicapped, and shall include a series of minimum diameter push-buttons numbered to correspond to the floor served and various additional switches, buttons and light jewels, including emergency stop, alarm button, "DOOR OPEN" button and telephone. Operating buttons shall be of manufacturer's standard design. Buttons and switches not required for automatic or fire-service operation shall be key-operated and mounted on front-return car operating station. Elevator number and "NO SMOKING" shall be international symbol engraved on upper portion of car. Operating panel in car shall consist of a flush-mounted panel containing the following operating devices:

a. "DOOR OPEN" button.

b. "DOOR CLOSE" button.

c. Key-operated car fan/light switch.

d. Key-operated ventilating blower switch/call light.

e. Communication telephone.

f. Emergency stop-switch key-operated when operated will stop the car independently of normal stopping devices. Operation of emergency stop switch shall not cause any power variance or surge that may affect the operation or condition of the control panel or its components.

g. Emergency signal-switch connected to a diameter signal bell outside of elevator hoistway at first floor.

h. Key-operated independent operation switch (for multi-car only).

i. Key-operated inspection switch which will render normal operation inoperative for the purpose of using the hoistway access switch.

j. Key-operated fire-service switch and light jewel.

k. Floor lock-out key switch (at Elevator #2) for rear door opening control. Key to be removable in both open and closed positions.

2.6.3 Not Used

2.6.4 Hall-Call Station

Hall-call operating devices for passenger elevators at landing shall consist of an "UP" push-button at bottom landing, a "DOWN" push-button at top landing, and "UP" and "DOWN" push-buttons at all other landings. Buttons shall be manufacturer's standard design. Buttons shall be designed with operating clearance to seat on faceplate in lieu of button mechanism. Buttons shall have maximum protrusion of beyond faceplate with beveled edges to prevent damage from side blows.

2.6.4.1 Not Used

2.6.4.2 Fire-Service Switch

Fire-service switch for passenger elevators shall be located at the designated landing.

2.6.4.3 Hoistway Vent Key Switch

Provide and locate key switch to open and close hoistway smoke vent at top of elevator shaft. Switch device to have visual indicators for open and closed status.

2.6.5 Direction Lanterns

Lanterns for passenger elevators shall be in accordance with FED-STD 795 and 36 CFR 1191 and shall be provided at all floor landings locations where there are two elevators, and in each car entrance column. Lanterns shall be the manufacturer's standard design. Lanterns shall signal the approach of a stopping car when car is a predetermined distance from landing.

2.6.6 In-Car Car-Position Indicator

Indicator numerals and directional arrows for passenger elevators shall be high, white translucent plastic. As car travels through hoistway the car position shall be indicated by illumination of light jewel corresponding to landing at which the car is stopped or passing. Necessary light baffles shall be provided. Floor numerals and letters shall illuminate white. A position indicator of the digital-readout or dot-matrix type minimum high indication) shall be provided in car transom panel. Number corresponding to car position shall remain illuminated when motor drive is shut down. Illumination shall be shrouded in an approved manner to protect against glare from car lighting.

2.6.7 Audible Signals

An audible signal shall be provided at each floor landing and in each car and shall sound coincident with the lantern illumination indicators. The audible signal shall be no less than 20 decibels with a frequency no higher than 1500 Hz. The audible signal shall sound once for UP direction and twice for DOWN direction.

2.6.8 Combination Hall-Position Indicator and Directional Arrows

Combination hall-position indicator and directional arrows for passenger elevators shall be provided at first floor landing directly above entrance

frame. As elevator travels in hoistway, elevator position shall be indicated by illumination in alpha-numeric characters corresponding to the landing where elevator is stopped or passing. Number corresponding to position of car shall remain illuminated when motor is shut down. An audible signal shall sound in elevator car to indicate that the elevator is stopping or passing a floor served by elevator. Fixture design and operation shall be similar in design to that specified for Car Position Indicator.

2.7 Not Used

2.8 Not Used

2.9 PASSENGER CAR OPERATION (DUPLEX SELECTIVE/COLLECTIVE)

Passenger Elevator Nos. 2 and 3 (pair): Pairs of cars shall be arranged so that when all calls have been answered, 1 car will park at main entrance floor, the other car will remain at last floor served. A car at first floor or traveling UP shall continue UP until all UP landing calls are answered provided the landing buttons are pressed in time to make the stop and shall answer all DOWN landing calls behind the other car traveling DOWN. A car at the top floor traveling DOWN shall continue DOWN until all DOWN landing calls are answered provided the landing buttons are pressed in time to make the stop and shall answer all UP landing calls behind other car traveling UP. When both cars are in operation, landing calls shall be answered by the car nearest the call and set in the direction of call. Only one car shall answer any one landing call. Operation of each car shall be such that the momentary pressing of one or more car buttons shall close the car doors in an adjustable, predetermined time after buttons are pressed and start the car. Cars shall stop at all landings for which car or landing buttons have been pressed in the order in which landings are reached, irrespective of the sequence in which buttons have been pressed. If one car is out of service or fails to start, the other car shall automatically answer all calls. When cars are parked at home landing with doors closed, pressing a hall button at those floors shall illuminate lights and shall open the car doors.

2.10 Not Used

2.11 Not Used

2.12 Not Used

2.13 Not Used

2.14 Not Used

2.15 AUTOMATIC EMERGENCY POWER OPERATION

Elevator control system shall be arranged to operate on emergency power supply upon failure of the normal power supply. Elevators shall operate as follows:

a. When normal power supply fails, all cars shall shut down.

b. One car shall automatically start and travel at full-rated speed to designated landing, stop, open the car and hoistway doors, then shut down.

c. After first car shuts down, other cars in the group shall

individually operate as described above.

d. After all cars have moved to first floor, a preselected car shall operate at rated speed to serve car and landing calls. Automatic selection can be overridden manually. Emergency power selector buttons and light jewels shall be provided in a stainless steel faceplate at the designated landing. Emergency power selector buttons shall be operable after automatic return has been completed, and shall permit the selection of a maximum of 1 elevator at a time.

2.16 AUTOMATIC ELEVATOR OPERATION

2.16.1 General

The operating device shall consist of a series of push-buttons in the car numbered to correspond to various landings, "UP" and "DOWN" buttons at intermediate landings and a single button at terminal landing. To meet the elevator operation requirements specified in this section all buttons shall be connected electrically to the control system which governs the floor selection, car selection, direction of travel and governs the acceleration and retardation.

2.16.2 Operation

Car calls shall be registered within the car by pressing the button corresponding to the designated floors. Hall calls shall be registered by pressing buttons in the corridor push-button fixture. Once the demand for elevator service has been established and the car has received a start signal the car operation shall be as follows.

2.16.2.1 Door Closing

Doors shall close automatically. When doors are fully closed and the interlock circuit established, the car shall start to move in the direction established by control system. Car shall accelerate and decelerate automatically and stop at first floor for which a car button has been registered or at first floor for a corridor demand which has been assigned to car. Car shall stop at all floors for which car calls are registered in the order in which the floors are reached and shall stop for any corridor demands assigned to the cars in the order in which the floors are reached.

2.16.2.2 Door Opening

Doors shall open automatically as car reaches the landing. After a predetermined time the doors shall close and the car shall proceed to answer the remaining car or assigned corridor calls. A protective device such as a safety edge and light beam device shall be provided on car door and when activated will prevent closing of doors. Cars shall become available for assignment at whatever floor the last car demand has been satisfied in the direction in which the car is traveling.

2.16.2.3 Car Dispatch

When car does not receive a demand dispatch at dispatching floor for an adjustable time period up to 10 minutes set initially at 5 minutes, the motor drive unit shall be switched-off. If the car's switched-off motor drive unit receives a demand dispatch the motor drive unit shall automatically restart.

2.16.2.4 Door Dwell-Time

Door open dwell-times shall be adjustable so that the open time for a car call is shorter than the open time for corridor calls and second passengers. If a longer time is needed for passenger entry, doors can be prevented from closing or reversing by the light beam door control, the protective leading edge on car door, or by pressing "DOOR OPEN" button in car. Door dwell-times shall comply with FED-STD 795 and 36 CFR 1191.

2.16.3 Not Used

2.16.4 Automatic Load Weighing

Passenger elevators shall be provided with load-weighing devices which will cause elevator to bypass hall calls when elevator is filled to an adjustable percentage. Corridor calls shall remain registered until the next available car responds to the call.

2.16.5 Not Used

2.16.6 Door Operation

Double-door operation are not acceptable for passenger elevators. If an UP traveling car has a passenger for an intermediate floor and a DOWN call is registered at that floor with no-calls above car, the car shall travel to floor, open the door and let passenger out, then light the DOWN direction arrow in hall lantern and accept the waiting passenger who registered the DOWN call. Doors shall not perform the open-close cycle before elevator proceeds to next call.

2.16.7 Automatic Power Shutdown

Elevator control system shall cause automatic power shutdown of the elevators in the event that a heat detector or sprinkler head located in the elevator machine room or in the elevator hoistway activates. Heat detector shall be fixed-temperature-rate-of-rise type, rated at 135 to 140 degrees F. Activation of a heat detector or a waterflow switch, which monitors only the sprinkler heads in elevator machine room and in the hoistway, shall cause the following operations to the affected elevators:

a. Elevators which are in motion will proceed to the nearest available landing away from fire floor, and shall cause power-operated doors to open and remain open. The fire floor is considered the floor where the fused sprinkler head or heat detector is located.

b. Elevators which are standing at a landing with open doors will remain open at the floor. If power-operated doors are closed, the elevator will cause doors to open.

c. Power to the elevators will be automatically shutdown by operating the shunt-trip breaker(s) in the main line power supply. Shutdown will occur only after the elevators are stopped at a landing, and power-operated doors are opened.

d. Automatic shutdown will override Phase I Emergency Recall Operations, ASME A17.1, Rules 211.3a and 211.3b, but will not override Phase II Emergency In-Car Operation, ASME A17.1, Rule

211.3c if Phase II operation is in effect.

2.17 Not Used

2.18 Not Used

2.19 Not Used

2.20 COMMUNICATIONS LINKS OVER VOLTAGE PROTECTION Not Used

2.21 FIREFIGHTERS SERVICE

Firefighter service shall be in accordance with ASME A17.1 for automatic elevators. Elevator lobby and machine room smoke detectors shall be in accordance with Section 13851 FIRE DETECTION AND ALARM SYSTEM, ADDRESSABLE.

2.22 ELEVATOR POWER UNIT

2.22.1 Pumping and Control Mechanism

Hydraulic fluid shall be provided in the reservoir, pump and control valve. Hydraulic fluid shall have a minimum fire point of as established by ASTM D 92. If oil temperature drops below pre-set minimum, elevator shall be dispatched automatically to lowest terminal floor at which point the pump will bypass oil in system without car motion until pre-set temperature is reached. Normal response to passenger demand shall not be affected by this control. Resistance type heating elements do not meet the intent of this specification.

2.22.1.1 Oil Temperature Device

An oil temperature device shall be provided that will maintain oil temperature between and regardless of ambient temperatures.

2.22.1.2 Pump

Pump shall be a rotary-positive displacement type for oil-hydraulic elevator service designed for steady discharge with minimum pulsation to give smooth and quiet operation, with an output which will not vary more than 10 percent between no-load and full-load on the elevator. Operating pressure shall not exceed

2.22.1.3 Piping

Piping shall be ASTM A 53 Grade E or S, ASTM A 106 Grade B, or grooved piping system of minimum schedule 40 seamless steel conforming to ASME A17.1 and ASME B16.11. Pipes shall conform to the cleanliness requirements of ASME B31.1.

2.22.1.4 Motor

Motor shall be especially designed for oil-hydraulic elevator service and shall be of standard manufacture duty rating and provided with specified speeds and loads.

2.22.1.5 Oil-Control Unit

Oil-control unit shall contain the following valve assemblies:

a. Automatic shut-off valve shall be provided in the oil-supply line as close to the cylinder inlet as possible. When there is a 10 percent drop in NO-LOAD operating pressure, the automatic shut-off valve shall be activated. When activated, the device shall immediately stop the descent of elevator and hold the elevator until it is lowered by use of the maximum lowering feature of the valve. Manual lowering feature of automatic shut-off valve shall be arranged to limit the maximum descending speed of elevator to Exposed adjustments of automatic shut-off shall have the means of adjustment sealed after being set to the correct position.

b. Relief-valve for hydraulic shall be externally adjustable and shall bypass the total oil flow without increasing back pressure by more than 56 percent above working pressure.

c. Safety check-valve shall close quietly without permitting any perceptible reverse flow and shall be designed to support the elevator on a positively locked column of oil when car is at rest.

d. Up-start and stop valve shall be externally adjustable and shall bypass oil flow during the start-and-stop of motor-pump assembly. Valve shall close slowly, gradually diverting oil to the jack unit to insure smooth up-start and up-step.

e. Lowering and leveling valve shall be externally adjustable for drop-away speed, lowering speed, leveling speed and stopping speed to insure smooth down-starts and stops. Leveling valve shall be designed to level the car to floor in the direction the car is traveling when slowdown is initiated.

f. Manual lowering valve shall be capable of lowering the elevator car in event of power failure. Manual-lowering valve shall be arranged to limit the maximum descending speed under manual operation to 15 fpm.

g. A service check-valve shall be installed in oil supply line between power unit and jack.

2.22.1.6 Storage Tank

Storage tank shall be single-wall construction of steel with a steel cover. Manufacturer's recommendation for the type of oil to be used shall be included in written instructions for the care, adjustment and maintenance of equipment.

2.22.1.7 Controller

Electric controller shall be of the microprocessor based logic type with battery backup provided with reduced voltage starting. Components required for proper elevator performance shall be neatly mounted and wired and completely enclosed in a cabinet with a mechanically-latched door. Control cabinet shall be designed for mounting on power unit, wall or floor stand. Electric control apparatus shall be completely isolated from oil reservoir. A feature shall be incorporated in electrical control circuit which will cause elevator car to descent automatically to the lowest terminal landing, if the system runs low on oil during ascending of the car. If power-operated doors are used, the car and hoistway doors shall automatically open when car reaches landing to allow passengers to exit. Parked car shall have doors in closed position and all control buttons

shall be made inoperative.

2.23 LEVELING DEVICE

Elevators shall be equipped with a 2-way leveling device to automatically bring the car to floor landings. Car shall automatically re-level at each landing to correct the overtravel and undertravel, and maintain the level regardless of load on car. Electric stopping system shall be arranged so that the car will stop level with the floor before brake is set. Stopping accuracy shall not exceed a plus or minus

2.24 JACK UNIT

Jack unit shall be designed and constructed of sufficient size to lift the gross load to the height specified and shall be free from oil leakage. Brittle material such as grey cast iron shall not be used in jack construction. Jack unit shall consist of the following:

a. Telescoping plunger fabricated of heavy seamless steel tubing accurately turned and polished.

b. Stop-ring welded or screwed to the plunger to positively prevent plunger from leaving the cylinder.

c. Internal guide bearing.

d. Packing or seal.

e. Drip ring around cylinder top.

f. Outer cylinder made of steel tubing.

g. Air bleeder.

h. Brackets welded to jack cylinder for supporting the elevator on pit channels.

2.25 ELEVATOR SUPPORTS

Structural steel beams, inserts, brackets, bolts and fastening devices shall be provided for proper installation of elevator equipment. Wood plugs are not acceptable.

2.26 BUFFERS

Buffers shall be of design suitable for depth of pit. Buffer anchorage at pit floors shall be provided for each car and counterweight and arranged to avoid puncturing the pit waterproofing. Type of buffer used shall be tested and approved for compliance with elevator service requirements before installation. Pipe struts and steadiers shall be provided as required for pit conditions. A metal plate with information concerning stroke and load-rating shall be permanently fastened to each buffer. Pit-mounted buffers shall have an adequate stroke designed to bring the fully-loaded car and counterweight to rest from governor tripping speed at an average rate of retardation not exceeding gravity. Moving portion of buffer shall be designed to be accelerated by the car without noticeable peak retardation. Spring buffers shall be in accordance with ASME A17.1 A17.1.

2.27 LUBRICATION POINTS

Every part subject to movement friction shall be provided with provisions for oil or grease lubrication. All points of lubrication shall be readily accessible.

PART 3 EXECUTION

3.1 INSTALLATION

Elevators and equipment shall be installed in accordance with ASME A17.1, manufacturer's recommendations, and State of Minnesota Rules and Codes: CHAPTER 1307 - Elevators and Related Devices Code. Guide rails shall be set plumb and parallel and attached to guide rail brackets secured to building structure as required. Steel shim plates shall be used for aligning equipment. Guide rail sections shall be joined together in accordance with ASME A17.1. Guide rails shall be thoroughly cleaned and made smooth before elevator is put into operation. During installation all stainless steel shall be protected.

3.2 FIELD WELDING

When structural or load-bearing members are to be field welded, welding and qualification of welders shall be as specified in Section 05120 STRUCTURAL STEEL.

3.3 CASING, CYLINDER AND PLUNGER UNIT

A steel casing minimum (8 inches) larger in diameter than the cylinder sealed at bottom with steel plate or concrete plug shall be complete with provisions to accommodate a double wall cylinder. Casing shall be accurately positioned, plumbed and set to accept the cylinder. The cylinder shall be protected from corrosion by totally enclosing the cylinder with a separate schedule 80, polyvinyl chloride jacket or with a high density, fused polyethylene coating, recommended by the manufacturer. Area between casing and cylinder wall shall be filled with washed dry sand after cylinder has been accurately located. Top of casing shall be sealed. The work of boring the well and setting the cylinder shall be coordinated with construction of concrete pit.

3.4 ELEVATOR WIRING

Wiring shall be provided for electrically-operated items of elevator equipment to comply with requirements of NFPA 70 and Section 16415 ELECTRICAL WORK, INTERIOR. For control and signal circuits wire shall be minimum No. 16 AWG. For power and lighting circuits wire shall be minimum No. 12 AWG. Work light fixtures equipped with 150 watt incandescent lamps and ground duplex receptacles shall be provided at top and bottom of car. Work light fixtures and traveling cable junction boxes shall be located to provide illumination at junction boxes. Wiring shall terminate in junction boxes. Wires shall be identified and shall match symbols shown on wiring diagrams. Control and signal wires shall be brought to accessible numbered terminal blocks on the controller. Intra-panel wiring shall be flame-resistant type.

3.4.1 Traveling Cables

Cables shall terminate at numbered terminal blocks in car and machine room. Traveling cable shall be provided with a separate shielded circuit for

communication system and hang to obtain proper size of loop. Traveling cable shall be provided with 10 percent spare conductors for each car.

3.5 PAINTING

Except for factory-finished items and corrosion-resistant items, machined surfaces shall be painted as specified in Section 09900 PAINTING, GENERAL.

3.6 TESTING

Testing shall be in accordance with requirements of ASME A17.1and ASME A17.2.2; and as specified below. The Contractor shall conduct a complete test of the system. After the system has passed all tests, the Contractor shall notify the Contracting Officer in writing, 14 days prior to the time of performing the acceptance test, that the system is complete and is ready for final acceptance testing. The Contractor after receiving written approval from the Contracting Officer will conduct a complete acceptance test of the system. Final testing will be witnessed by a certified state elevator inspector.

3.6.1 Testing Period

Each elevator shall be tested with the specified rated-load in car continuously for a period of 35 percent of the duty time. During the test run the car shall be stopped at all floors in both directions of travel for a standing period of 10 seconds per floor. A manual test of the final limits (UP and DOWN overtravel) shall also be performed.

3.6.2 Speed Load Testing

The actual speed of elevator car in both directions of travel shall be determined with the rated-load and with no-load in the elevator car. Actual measured speed of car with the rated-load in the UP direction shall be within 5 percent of rated speed. The maximum difference in actual measured speeds obtained under the various conditions outlined shall not exceed 10 percent of the total difference between the UP and DOWN speeds.

3.6.3 Car Leveling Testing

Elevator car-leveling devices shall be tested for accuracy of landing at all floors with no-load in car, with symmetrical load in car and with the rated-load in car in both directions of travel.

3.6.4 Temperature Rise Testing

Temperature rise of hydraulic pump motor, motor drive, exciter and booster shall be conducted during the full-load test run for minimum one hour. Under these conditions, temperature rise of equipment shall not exceed the requirements established in NEMA MG 1 Chapter 12. Test shall be started when all parts of equipment are within the temperature required by NEMA at time of starting tests.

3.6.5 Insulation-Resistance Testing

Insulation-resistance testing shall be performed to ensure that the complete elevator wiring systems will be free from short circuits and grounds. Electrical conductors shall have an insulation-resistance of not less than 1 megohm between each conductor and ground, and not less than 1 megohm between each conductor and all other conductors. Prior to testing,

provisions shall be made to prevent damage to electronic devices.

3.7 FRAMED INSTRUCTIONS

Two sets of instructions shall be typed and framed under glass or in laminated plastic, and posted side-by-side in the elevator room where directed before acceptance of elevator systems. First set of instructions shall include wiring and control diagrams showing the complete layout of elevator system. Second set of instructions shall include the condensed operating instructions describing preventive maintenance procedures, the methods for checking the elevator system for normal safe operation, and the procedures for safely starting and stopping the elevator system.

3.8 OPERATOR TRAINING

Contractor shall conduct a formal training course for operating Government personnel which shall include care, lubrication, adjustment and maintenance of elevator equipment. Training period shall consist of a total of four hours of normal working time and shall start after the system is functionally completed but prior to final acceptance tests. Field instructions shall cover all of the items contained in the operating and maintenance instructions, including demonstrations of routine maintenance operations. Contracting Officer shall be notified at least 14 days prior to date of starting the training course.

-- End of Section --

SECTION TABLE OF CONTENTS

DIVISION 15 - MECHANICAL

SECTION 15080

THERMAL INSULATION FOR MECHANICAL SYSTEMS

03/99

PART 1 GENERAL

1.1 REFERENCES
1.2 SYSTEM DESCRIPTION
1.3 GENERAL QUALITY CONTROL
1.3.1 Standard Products
1.3.2 Installer's Qualifications
1.3.3 Surface Burning Characteristics
1.3.4 Identification of Materials
1.4 SUBMITTALS
1.5 STORAGE

PART 2 PRODUCTS

2.1 GENERAL MATERIALS
2.1.1 Adhesives
2.1.1.1 Acoustical Lining Insulation Adhesive
2.1.1.2 Mineral Fiber Insulation Cement
2.1.1.3 Lagging Adhesive
2.1.2 Contact Adhesive
2.1.3 Caulking
2.1.4 Corner Angles
2.1.5 Finishing Cement
2.1.6 Fibrous Glass Cloth and Glass Tape
2.1.7 Staples
2.1.8 Jackets
2.1.8.1 White Vapor Retarder All Service Jacket (ASJ)
2.1.8.2 Aluminum Jackets
2.1.8.3 Polyvinyl Chloride (PVC) Jackets
2.1.9 Vapor Retarder Coating
2.1.9.1 Vapor Retarder Required
2.1.9.2 Vapor Retarder Not Required
2.1.10 Not Used
2.2 PIPE INSULATION MATERIALS
2.2.1 Aboveground Cold Pipeline
2.2.1.1 Outdoor, Indoor - Exposed or Concealed
2.2.1.1.# Flexible Cellular Insulation
2.2.1.1.# Phenolic Insulation
2.2.1.1.# Mineral Fiber
2.2.2 Aboveground Hot Pipeline
2.2.2.1 Outdoor, Indoor - Exposed or Concealed
2.2.2.1.# Mineral Fiber
2.2.3 Not Used
2.2.4 Not Used
2.3 DUCT INSULATION MATERIALS
2.3.1 Rigid Mineral Fiber
2.3.2 Flexible Mineral Fiber
2.3.3 Cellular Glass

2.3.4 Phenolic Foam
2.3.5 Flexible Cellular
2.4 EQUIPMENT INSULATION MATERIALS
2.4.1 Cold Equipment Insulation
2.4.1.1 Cellular Glass
2.4.1.2 Flexible Cellular Insulation
2.4.1.3 Phenolic Foam
2.4.2 Hot Equipment Insulation
2.4.2.1 Rigid Mineral Fiber
2.4.2.2 Flexible Mineral Fiber
2.4.2.3 Not Used
2.4.2.4 Cellular Glass
2.4.2.5 Flexible Cellular Insulation
2.4.2.6 Phenolic Foam
2.4.2.7 Molded Expanded Perlite

PART 3 EXECUTION

3.1 APPLICATION - GENERAL
3.1.1 Installation
3.1.2 Firestopping
3.1.3 Painting and Finishing
3.1.4 Installation of Flexible Cellular Insulation
3.1.5 Welding
3.1.6 Pipes/Ducts/Equipment which Require Insulation
3.2 PIPE INSULATION INSTALLATION
3.2.1 Pipe Insulation
3.2.1.1 General
3.2.1.2 Pipes Passing Through Walls, Roofs, and Floors
3.2.1.3 Pipes Passing Through Hangers
3.2.1.4 Flexible Cellular Pipe Insulation
3.2.1.5 Pipes in high abuse areas.
3.2.2 Aboveground Cold Pipelines
3.2.2.1 Insulation Thickness
3.2.2.2 Jacket for Mineral Fiber, Cellular Glass, and Phenolic Foam Insulated Pipe
3.2.2.3 Insulation for Straight Runs (Mineral Fiber, Cellular Glass and Phenolic Foam)
3.2.2.4 Insulation for Fittings and Accessories
3.2.2.5 Optional PVC Fitting Covers
3.2.3 Aboveground Hot Pipelines
3.2.3.1 Insulation Thickness
3.2.3.2 Jacket for Insulated Hot Pipe
3.2.3.3 Insulation for Straight Runs
3.2.3.4 Insulation for Fittings and Accessories
3.2.4 Piping Exposed to Weather
3.2.4.1 Aluminum Jacket
3.2.4.2 Insulation for Fittings
3.2.4.3 PVC Lagging
3.2.5 Not Used.
3.2.5.1 Not Used.
3.2.5.2 [Enter Appropriate Subpart Title Here]
3.3 DUCT INSULATION INSTALLATION
3.3.1 Duct Insulation Thickness
3.3.2 Insulation and Vapor Retarder for Cold Air Duct
3.3.2.1 Installation on Concealed Duct
3.3.2.2 Not used
3.3.3 Insulation for Warm Air Duct
3.3.3.1 Installation on Concealed Duct

3.3.3.2 Not Used
3.3.4 Ducts Handling Air for Dual Purpose
3.3.5 Not Used
3.3.6 Duct Test Holes
3.3.7 Not Used
3.4 EQUIPMENT INSULATION INSTALLATION
3.4.1 General
3.4.2 Not Used
3.4.3 Insulation for Hot Equipment
3.4.3.1 Insulation
3.4.3.2 Insulation of Pumps
3.4.3.3 Other Equipment
3.4.4 Not Used
3.4.5 Not Used

-- End of Section Table of Contents --

****

DEPARTMENT OF THE ARMY
U.S. ARMY CORPS OF ENGINEERS

CEGS-15080 (March 1999)

Superseding
CEGS-15080 (March 1998)

GUIDE SPECIFICATION FOR CONSTRUCTION

SECTION 15080

THERMAL INSULATION FOR MECHANICAL SYSTEMS
03/99

PART 1 GENERAL

1.1 REFERENCES

The publications listed below form a part of this specification to the extent referenced. The publications are referred to in the text by basic designation only. At the discretion of the government, the manufacturer of any material supplied will be required to furnish test reports pertaining to any of the tests necessary to assure compliance with the standard or standards referenced in this specification.

AMERICAN SOCIETY FOR TESTING AND MATERIALS (ASTM)

ASTM B 209	(1996) Aluminum and Aluminum-Alloy Sheet and Plate
ASTM C 195	(1995) Mineral Fiber Thermal Insulating Cement
ASTM C 449/C 449M	(1995) Mineral Fiber Hydraulic-Setting Thermal Insulating and Finishing Cement
ASTM C 518	(1991) Steady-State Heat Flux Measurements and Thermal Transmission Properties by Means of the Heat Flow Meter Apparatus
ASTM C 534	(1994) Preformed Flexible Elastomeric Cellular Thermal Insulation in Sheet and Tubular Form
ASTM C 547	(1995) Mineral Fiber Pipe Insulation
ASTM C 552	(1991) Cellular Glass Thermal Insulation
ASTM C 553	(1992) Mineral Fiber Blanket Thermal Insulation for Commercial and Industrial Applications
ASTM C 610	(1995) Molded Expanded Perlite Block and Pipe thermal Insulation
ASTM C 612	(1993) Mineral Fiber Block and Board

	Thermal Insulation
ASTM C 665	(1995) Mineral-Fiber Blanket Thermal Insulation for Light Frame Construction and Manufactured Housing
ASTM C 647	(1995) Properties and Tests of Mastics and Coating Finishes for Thermal Insulation
ASTM C 795	(1992) Thermal Insulation for Use in Contact With Austenitic Stainless Steel
ASTM C 916	(1985; Rev 1996) Adhesives for Duct Thermal Insulation
ASTM C 920	(1995) Elastomeric Joint Sealants
ASTM C 921	(1989 R; 1996) Determining the Properties of Jacketing Materials for Thermal Insulation
ASTM C 1126	(1996) Faced or Unfaced Rigid Cellular Phenolic Thermal Insulation
ASTM C 1136	(1995) Flexible, Low Permeance Vapor retarders for Thermal Insulation
ASTM C 1290	(1995) Flexible Fibrous Glass Blanket Insulation Used to Externally Insulate HV AC Ducts
ASTM E 84	(1997a) Surface Burning Characteristics of Building Materials
ASTM E 96	(1995) Water Vapor Transmission of Materials

MANUFACTURERS STANDARDIZATION SOCIETY OF THE VALVE AND FITTINGS INDUSTRY (MSS)

MSS SP-69	(1996) Pipe Hangers and Supports - Selection and Application

MIDWEST INSULATION CONTRACTORS ASSOCIATION (MICA)

MICA Insulation Stds	(1993) National Commercial & Industrial Insulation Standards

1.2 SYSTEM DESCRIPTION

Field-applied insulation and accessories on mechanical systems shall be as specified herein; factory-applied insulation is specified under the piping, duct or equipment to be insulated. Section 02554ABOVEGROUND HEAT DISTRIBUTION SYSTEM. Field applied insulation materials required for use on Government-furnished items as listed in the SPECIAL CONTRACT REQUIREMENTS shall be furnished and installed by the Contractor.

1.3 GENERAL QUALITY CONTROL

1.3.1 Standard Products

Materials shall be the standard products of manufacturers regularly engaged in the manufacture of such products and shall essentially duplicate items that have been in satisfactory use for at least 2 years prior to bid opening.

1.3.2 Installer's Qualifications

Qualified installers shall have successfully completed three or more similar type jobs within the last 5 years.

1.3.3 Surface Burning Characteristics

Unless otherwise specified, insulation not covered with a jacket shall have a flame spread index no higher than 75 and a smoke developed index no higher than 150. Insulation systems which are located in air plenums, in ceiling spaces, and in attic spaces shall have a flame spread index no higher than 25 and a smoke developed index no higher than 50. Insulation materials located exterior to the building perimeter are not required to be fire-rated. Flame spread and smoke developed indexes shall be determined by ASTM E 84. Insulation shall be tested in the same density and installed thickness as the material to be used in the actual construction. Material supplied by a manufacturer with a jacket shall be tested as a composite material. Jackets , facings, and adhesives shall have a flame spread index no higher than 25 and a smoke developed index no higher than 50 when tested in accordance with ASTM E 84.

1.3.4 Identification of Materials

Packages or standard containers of insulation, jacket material, cements, adhesives, and coatings delivered for use, and samples required for approval shall have manufacturer's stamp or label attached giving the name of the manufacturer and brand, and a description of the material.

1.4 SUBMITTALS

None.

1.5 STORAGE

Materials shall be delivered in the manufacturer's unopened containers. Materials delivered and placed in storage shall be provided with protection from weather, humidity, dirt, dust and other contaminants. Insulation material and supplies that become dirty, dusty, wet, or otherwise contaminated may be rejected by the Contracting Officer.

PART 2 PRODUCTS

2.1 GENERAL MATERIALS

Materials shall be compatible and shall not contribute to corrosion, soften, or otherwise attack surfaces to which applied in either the wet or dry state. Materials to be used on stainless steel surfaces shall meet ASTM C 795 requirements. Materials shall be asbestos free and conform to the following:

2.1.1 Adhesives

2.1.1.1 Acoustical Lining Insulation Adhesive

Adhesive shall be a nonflammable, fire-resistant adhesive conforming to ASTM C 916, Type I.

2.1.1.2 Mineral Fiber Insulation Cement

Cement shall be in accordance with ASTM C 195.

2.1.1.3 Lagging Adhesive

Lagging is the material used for thermal insulation, especially around a cylindrical object. This may include the insulation as well as the cloth/material covering the insulation. Lagging adhesives shall be nonflammable and fire-resistant and shall have a flame spread rating no higher than 25 and a smoke developed rating no higher than 50 when tested in accordance with ASTM E 84. Adhesive shall be pigmented [white] [red] and be suitable for bonding fibrous glass cloth to faced and unfaced fibrous glass insulation board; for bonding cotton brattice cloth to faced and unfaced fibrous glass insulation board; for sealing edges of and bounding fibrous glass tape to joints of fibrous glass board; for bonding lagging cloth to thermal insulation; or for attaching fibrous glass insulation to metal surfaces. Lagging adhesives shall be applied in strict accordance with the manufacturer's recommendations.

2.1.2 Contact Adhesive

Adhesive may be dispersed in a nonhalogenated organic solvent or, dispersed in a nonflammable organic solvent which shall not have a fire point below 200 degrees F. The adhesive shall not adversely affect, initially or in service, the insulation to which it is applied, nor shall it cause any corrosive effect on metal to which it is applied. Any solvent dispersing medium or volatile component of the adhesive shall have no objectionable odor and shall not contain any benzene or carbon tetrachloride. The dried adhesive shall not emit nauseous, irritating, or toxic volatile matters or aerosols when the adhesive is heated to any temperature up to 212 degrees F. The adhesive shall be nonflammable and fire resistant.

2.1.3 Caulking

ASTM C 920, Type S, Grade NS, Class 25, Use A.

2.1.4 Corner Angles

Nominal 0.016 inch aluminum 1 x 1 inch with factory applied kraft backing. Aluminum shall be ASTM B 209, Alloy 3003, 3105, or 5005.

2.1.5 Finishing Cement

Mineral fiber hydraulic-setting thermal insulating cement ASTM C 449/C 449M. All cements that may come in contact with Austenitic stainless steel must include testing per ASTM C 795.

2.1.6 Fibrous Glass Cloth and Glass Tape

Fibrous glass cloth and glass tape shall have flame spread and smoke developed ratings of no greater than 25/50 when measured in accordance with ASTM E 84. Tape shall be 4 inch wide rolls. Class 3 tape shall be 4.5

ounces per square yard.

2.1.7 Staples

Outward clinching type.

2.1.8 Jackets

ASTM C 921, Type I, maximum moisture vapor transmission 0.02 perms, (measured before factory application or installation), minimum puncture resistance 50 Beach units on all surfaces except concealed ductwork, where a minimum puncture resistance of 25 Beach units is acceptable. Minimum tensile strength, 35 pound/inch width. ASTM C 921, Type II, minimum puncture resistance 25 Beach units, tensile strength minimum 20 pound/inch width. Jackets used on insulation exposed in finished areas shall have white finish suitable for painting without sizing. Based on the application, insulation materials which require factory applied jackets are mineral fiber, cellular glass, and phenolic foam. All non-metallic jackets shall have a maximum flame spread index of 25 and a maximum smoke developed index of 50 when tested in accordance with ASTM E 84.

2.1.8.1 White Vapor Retarder All Service Jacket (ASJ)

For use on hot/cold pipes, ducts, or equipment vapor retarder jackets used on insulation exposed in finished areas shall have white finish suitable for painting without sizing.

2.1.8.2 Aluminum Jackets

Aluminum jackets shall be corrugated, embossed or smooth sheet, 0.016 inch nominal thickness; ASTM B 209, Temper H14, Temper H16, Alloy 3003, 5005, or 3105 with factory applied moisture retarder. Corrugated aluminum jacket shall not be used outdoors. Aluminum jacket securing bands shall be Type 304 stainless steel, 0.015 inch thick, 1/2 inch wide for pipe under 12 inch diameter and 3/4 inch wide for pipe over 12 inch and larger diameter. Aluminum jacket circumferential seam bands shall be 2 x 0.016 inch aluminum matching jacket material. Bands for insulation below ground shall be 3/4 x 0.020 inch) thick stainless steel, or fiberglass reinforced tape. The jacket may, at the option of the Contractor, be provided with a factory fabricated Pittsburg or "Z" type longitudinal joint. When the "Z" joint is used, the bands at the circumferential joints shall be designed by the manufacturer to seal the joints and hold the jacket in place.

2.1.8.3 Polyvinyl Chloride (PVC) Jackets

Polyvinyl chloride (PVC) jacket and fitting covers shall have high impact strength, UV resistant rating or treatment and moderate chemical resistance with minimum thickness 0.030 inch. Insulation under PVC jacket shall meet jacket manufacturer's written recommendations.

2.1.9 Vapor Retarder Coating

The vapor retarder coating shall be fire and water resistant and appropriately selected for either outdoor or indoor service. Color shall be white. The water vapor permeance of the compound shall be determined according to procedure B of ASTM E 96 utilizing apparatus described in ASTM E 96. The coating shall be a nonflammable, fire resistant type. All other application and service properties shall be in accordance with ASTM C 647.

2.1.9.1 Vapor Retarder Required

ASTM C 1136, Type I, maximum moisture vapor transmission 0.02 perms, minimum puncture resistance 50 Beach units on all surfaces except concealed ductwork, where Type II, maximum moisture vapor transmission 0.02 perms, a minimum puncture resistance of 25 Beach units is acceptable.

2.1.9.2 Vapor Retarder Not Required

ASTM C 1136, Type III, maximum moisture vapor transmission 0.10 perms, minimum puncture resistance 50 Beach units on all surfaces except ductwork, where Type IV, maximum moisture vapor transmission 0.10, a minimum puncture resistance of 25 Beach units is acceptable.

2.1.10 Not Used

2.2 PIPE INSULATION MATERIALS

Pipe insulation materials shall be limited to those listed herein and shall meet the following requirements:

2.2.1 Aboveground Cold Pipeline

Insulation for minus 30 degrees to plus 60 degrees F shall be as follows:

2.2.1.1 Outdoor, Indoor - Exposed or Concealed

2.2.1.1.# Flexible Cellular Insulation

ASTM C 534, Type I or II. Type II shall have vapor retarder skin on both sides of the insulation.

2.2.1.1.# Phenolic Insulation

ASTM C 1126, Type III. Phenolic insulations shall comply with ASTM C 795 and with the ASTM C 665 paragraph Corrosiveness. Supply the insulation with manufacturers recommended factor applied jacket.2.2.1.1.# Mineral Fiber

ASTM C 547, Types I, II or III, supply the insulation with manufacturers recommended factory applied jacket.

2.2.2 Aboveground Hot Pipeline

For aboveground hot pipeline above 60 degrees F insulation the following requirements shall be met. Supply the insulation with manufacturers recommended factory applied jacket.

2.2.2.1 Outdoor, Indoor - Exposed or Concealed

2.2.2.1.# Mineral Fiber

ASTM C 547, Types I, II or III, supply the insulation with manufacturers recommended factory applied jacket.

2.2.3 Not Used

2.2.4 Not Used

2.3 DUCT INSULATION MATERIALS

Duct insulation materials shall be limited to those listed herein and shall meet the following requirements:

2.3.1 Rigid Mineral Fiber

ASTM C 612, Type IA, IB, II, III, & IV.

2.3.2 Flexible Mineral Fiber

ASTM C 553, Type I,or Type II up to 250 F. ASTM C 1290 Type III.

2.3.3 Cellular Glass

ASTM C 552, Type I.

2.3.4 Phenolic Foam

ASTM C 1126 Type II, shall comply with ASTM C 795.

2.3.5 Flexible Cellular

ASTM C 534 Type II.

2.4 EQUIPMENT INSULATION MATERIALS

Equipment insulation materials shall be limited to those listed herein and shall meet the following requirements:

2.4.1 Cold Equipment Insulation

For temperatures below 60 degrees F.

2.4.1.1 Cellular Glass

ASTM C 552, Type I, Type III, or Type IV as required.

2.4.1.2 Flexible Cellular Insulation

ASTM C 534, Type II.

2.4.1.3 Phenolic Foam

ASTM C 1126 Type II shall comply with ASTM C 795.

2.4.2 Hot Equipment Insulation

For temperatures above 60 degrees F.

2.4.2.1 Rigid Mineral Fiber

ASTM C 612, Type IA, IB, II, III, IV, or V as required for temperature encountered to 1800 degrees F.

2.4.2.2 Flexible Mineral Fiber

ASTM C 553, Type I, II, III, IV, V, VI or VII as required for temperature encountered to 1200 degrees F.

2.4.2.3 Not Used

2.4.2.4 Cellular Glass

ASTM C 552, Type I, Type III, or Type IV as required.

2.4.2.5 Flexible Cellular Insulation

ASTM C 534, Type II, to 200 degrees F.

2.4.2.6 Phenolic Foam

ASTM C 1126 Type II to 250 degrees F shall comply with ASTM C 795.

2.4.2.7 Molded Expanded Perlite

ASTM C 610.

PART 3 EXECUTION

3.1 APPLICATION - GENERAL

3.1.1 Installation

Except as otherwise specified, material shall be installed in accordance with the manufacturer's written instructions. Insulation materials shall not be applied until tests specified in other sections of this specification are completed. Material such as rust, scale, dirt and moisture shall be removed from surfaces to receive insulation. Insulation shall be kept clean and dry. Insulation shall not be removed from its shipping containers until the day it is ready to use and shall be returned to like containers or equally protected from dirt and moisture at the end of each workday. Insulation that becomes dirty shall be thoroughly cleaned prior to use. If insulation becomes wet or if cleaning does not restore the surfaces to like new condition, the insulation will be rejected, and shall be immediately removed from the jobsite. Joints shall be staggered on multi layer insulation. Mineral fiber thermal insulating cement shall be mixed with demineralized water when used on stainless steel surfaces. Insulation, jacketing and accessories shall be installed in accordance with MICA Insulation Stds standard plates except where modified herein or on the drawings.

3.1.2 Firestopping

Where pipes and ducts pass through fire walls, fire partitions, above grade floors, and fire rated chase walls, the penetration shall be sealed with fire stopping materials as specified in Section 07840 FIRESTOPPING.

3.1.3 Painting and Finishing

Painting shall be as specified in Section 09900 PAINTING, GENERAL.

3.1.4 Installation of Flexible Cellular Insulation

Flexible cellular insulation shall be installed with seams and joints sealed with a contact adhesive. Flexible cellular insulation shall not be used on surfaces greater than 200 degrees F. Seams shall be staggered when applying multiple layers of insulation. Insulation exposed to weather and not shown to have jacketing shall be protected with two coats of UV

resistant finish as recommended by the manufacturer after the adhesive is dry.

3.1.5 Welding

No welding shall be done on piping, duct or equipment without written approval of the Contracting Officer. The capacitor discharge welding process may be used for securing metal fasteners to duct.

3.1.6 Pipes/Ducts/Equipment which Require Insulation

Insulation is required, unless stated otherwise, on all pipes, ducts, or equipment, which operate at or below 60 F and at or above 80 F.

3.2 PIPE INSULATION INSTALLATION

3.2.1 Pipe Insulation

3.2.1.1 General

Pipe insulation shall be installed on aboveground hot and cold pipeline systems as specified below to form a continuous thermal retarder, including straight runs, fittings and appurtenances unless specified otherwise. Installation shall be with full length units of insulation and using a single cut piece to complete a run. Cut pieces or scraps abutting each other shall not be used. Pipe insulation shall be omitted on the following:

a. Pipe used solely for fire protection.

b. Chromium plated pipe to plumbing fixtures. However, fixtures for use by the physically handicapped shall have the hot water supply and drain, including the trap, insulated where exposed.

c. Sanitary drain lines.

d. Air chambers.

3.2.1.2 Pipes Passing Through Walls, Roofs, and Floors

a. Pipe insulation shall be continuous through the sleeve.

b. An aluminum jacket with factory applied moisture retarder shall be provided over the insulation wherever penetrations require sealing.

c. Where penetrating interior walls, the aluminum jacket shall extend 2 inches beyond either side of the wall and shall be secured on each end with a band.

d. Where penetrating floors, the aluminum jacket shall extend from a point below the backup material to a point 10 inches above the floor with one band at the floor and one not more than 1 inch from the end of the aluminum jacket.

e. Where penetrating waterproofed floors, the aluminum jacket shall extend from below the backup material to a point 2 inchesabove the flashing with a band 1 inch from the end of the aluminum jacket.

f. Where penetrating exterior walls, the aluminum jacket required for pipe exposed to weather shall continue through the sleeve to a point 2 inches beyond the interior surface of the wall.

g. Where penetrating roofs, pipe shall be insulated as required for interior service to a point flush with the top of the flashing and sealed with vapor retarder coating. The insulation for exterior application shall butt tightly to the top of flashing and interior insulation. The exterior aluminum jacket shall extend 2 inches down beyond the end of the insulation to form a counter flashing. The flashing and counter flashing shall be sealed underneath with caulking.

h. For hot water pipes supplying lavatories or other similar heated service which requires insulation, the insulation shall be terminated on the backside of the finished wall. The insulation termination shall be protected with two coats of vapor barrier coating with a minimum total thickness of 1/16 inch applied with glass tape embedded between coats (if applicable). The coating shall extend out onto the insulation 2 inches and shall seal the end of the insulation. Glass tape seams shall overlap 1 inch. Caulk the annular space between the pipe and wall penetration with approved fire stop material. Cover the pipe and wall penetration with a properly sized (well fitting) escutcheon plate. The escutcheon plate shall overlap the wall penetration at least 3/8 inch.

i. For domestic cold water pipes supplying lavatories or other similar cooling service which requires insulation, the insulation shall be terminated on the finished side of the wall (i.e., insulation must cover the pipe throughout the wall penetration). The insulation shall be protected with two coats of vapor barrier coating with a minimum total thickness of 1/16 inch. The coating shall extend out onto the insulation 2 inches and shall seal the end of the insulation. Caulk the annular space between the outer surface of the pipe insulation and the wall penetration with an approved fire stop material having vapor retarder properties. Cover the pipe and wall penetration with a properly sized (well fitting) escutcheon plate. The escutcheon plate shall overlap the wall penetration by at least 3/8 inch.

3.2.1.3 Pipes Passing Through Hangers

a. Insulation, whether hot or cold application, shall be continuous through hangers. All horizontal pipes 2 inchesand smaller shall be supported on hangers with the addition of a Type 40 protection shield to protect the insulation in accordance with MSS SP-69. Whenever insulation shows signs of being compressed, or when the insulation or jacket shows visible signs of distortion at or near the support shield, insulation inserts as specified below for piping larger than 2 inches shall be installed.

b. Horizontal pipes larger than 2 inches at 60 degrees F and above shall be supported on hangers in accordance with MSS SP-69, and Section 15400 PLUMBING, GENERAL PURPOSE.

c. Horizontal pipes larger than 2 inches and below 60 degrees F shall be supported on hangers with the addition of a Type 40 protection shield in accordance with MSS SP-69. An insulation

insert of cellular glass or calcium silicate [or perlite (above (80 F))]shall be installed above each shield. The insert shall cover not less than the bottom 180 degree arc of the pipe. Inserts shall be the same thickness as the insulation, and shall extend 2 inches on each end beyond the protection shield. When insulation inserts are required per the above, and the insulation thickness is less than 1 inch, wooden or cork dowels or blocks may be installed between the pipe and the shield to prevent the weight of the pipe from crushing the insulation, as an option to installing insulation inserts. The insulation jacket shall be continuous over the wooden dowel, wooden block, or insulation insert.

d. Vertical pipes shall be supported with either Type 8 or Type 42 riser clamps with the addition of two Type 40 protection shields in accordance with MSS SP-69 covering the 360 degree arc of the insulation. An insulation insert of cellular glass or calcium silicate shall be installed between each shield and the pipe. The insert shall cover the 360 degree arc of the pipe. Inserts shall be the same thickness as the insulation, and shall extend 2 inches on each end beyond the protection shield. When insulation inserts are required per the above, and the insulation thickness is less than 1 inch, wooden or cork dowels or blocks may be installed between the pipe and the shield to prevent the hanger from crushing the insulation, as an option instead of installing insulation inserts. The insulation jacket shall be continuous over the wooden dowel, wooden block, or insulation insert. The vertical weight of the pipe shall be supported with hangers located in a horizontal section of the pipe. When the pipe riser is longer than 30 feet, the weight of the pipe shall be additionally supported with hangers in the vertical run of the pipe which are directly clamped to the pipe, penetrating the pipe insulation. These hangers shall be insulated and the insulation jacket sealed as indicated herein for anchors in a similar service.

e. Inserts shall be covered with a jacket material of the same appearance and quality as the adjoining pipe insulation jacket, shall overlap the adjoining pipe jacket 1-1/2 inches, and shall be sealed as required for the pipe jacket. The jacket material used to cover inserts in flexible cellular insulation shall conform to ASTM C 1136, Type 1, and is allowed to be of a different material than the adjoining insulation material.3.2.1.4 Flexible Cellular Pipe Insulation

Flexible cellular pipe insulation shall be tubular form for pipe sizes 6 inches and less. Type II sheet insulation used on pipes larger than 6 inches shall not be stretched around the pipe. On pipes larger than 12 inches, adhere insulation directly to the pipe on the lower 1/3 of the pipe. Seams shall be staggered when applying multiple layers of insulation. Sweat fittings shall be insulated with miter-cut pieces the same size as on adjacent piping. Screwed fittings shall be insulated with sleeved fitting covers fabricated from miter-cut pieces and shall be overlapped and sealed to the adjacent pipe insulation.

3.2.1.5 Pipes in high abuse areas.

In high abuse areas such as janitor closets and traffic areas in equipment rooms, kitchens, and mechanical rooms, welded PVC jackets shall be utilized. Pipe insulation to the 6 foot level shall be protected.

3.2.2 Aboveground Cold Pipelines

The following cold pipelines shall be insulated per Table I minus 30 degrees to plus 60 degrees F:

a. Domestic cold and chilled drinking water.

b. Horizontal and vertical portions of interior roof drains.

c. Refrigerant suction lines.

d. HVAC hot water.

e. Air conditioner condensate drains.

f. Exposed lavatory drains, exposed domestic water piping and drains to areas for handicap personnel.

3.2.2.1 Insulation Thickness

Insulation thickness for cold pipelines shall be determined using Table I.

Table I - Cold Piping Insulation Thickness
Pipe Size (inches)

Type of Service	Material	Runouts up to 2 in*	1 in & less	1.25 - 2 in	2.5 - 4 in	5 - 6 in	8 in & larger
Refrigerant suction piping	CG		1.5	1.5	1.5	1.5	1.5
	FC		1.0	1.0	1.0	1.0	1.0
	PF		1.0	1.0	1.0	1.0	1.0
Cold domestic water, above and below ceilings & makeup water	CG	1.5	1.5	1.5	1.5	1.5	1.5
	FC	3/8	3/8	3/8	3/8	3/8	3/8
	PF	1.0	1.0	1.0	1.0	1.0	1.0
Exposed lavatory drains exposed domestic water piping & drains to areas for handicap	FC	0.5	0.5	0.5	0.5	3/4	3/4
	MF	0.5	1.0	1.0	1.5	1.5	1.5

Table I - Cold Piping Insulation Thickness
Pipe Size (inches)

Type of Service personnel	Material	Runouts up to 2 in*	1 in & less	1.25 - 2 in	2.5 - 4 in	5 - 6 in	8 in & larger
Horizontal & vertical roof drain leaders (including underside of roof drain fitting)	FC		0.5	0.5	0.5	0.5	0.5
	PF		1.0	1.0	1.0	1.0	1.0
	CG		1.5	1.5	1.5	1.5	1.5
Air conditioning condensate drain located inside building	FC		3/8	0.5	0.5	N/A	N/A
	PF		1.0	1.0	1.0	N/A	N/A

*When runouts to terminal units exceed 12 feet, the entire length of runout shall be insulated like main feed pipe.

LEGEND:

PF - Phenolic Foam
CG - Cellular Glass
CS - Calcium Silicate
MF - Mineral Fiber
FC - Flexible Cellular

3.2.2.2 Jacket for Mineral Fiber, Cellular Glass, and Phenolic Foam Insulated Pipe

Insulation shall be covered with a factory applied vapor retarder jacket or field applied seal welded PVC jacket. Insulation inside the building shown to be protected with an aluminum jacket shall have the insulation and vapor retarder jacket installed as specified herein. The aluminum jacket shall be installed as specified for piping exposed to weather, except sealing of the laps of the aluminum jacket is not required. In high abuse areas such as janitor closets and traffic areas in equipment rooms, kitchens, and mechanical rooms, aluminum jackets shall be utilized. Pipe insulation to the 6 ft level will be protected.

3.2.2.3 Insulation for Straight Runs (Mineral Fiber, Cellular Glass and Phenolic Foam)

a. Insulation shall be applied to the pipe with joints tightly butted. Insulation shall have all joints and ends sealed with vapor retarder coating.

b. Longitudinal laps of the jacket material shall overlap not less than 1-1/2 inches. Butt strips 3 inches wide shall be provided for circumferential joints.

c. Laps and butt strips shall be secured with adhesive and stapled on 4 inch centers if not factory self-sealing. If staples are used, they shall be sealed per paragraph 3.2.2.3 e.

d. Factory self-sealing lap systems may be used when the ambient temperature is between 40 degrees and 120 degrees F during installation. The lap system shall be installed in accordance with manufacturer's recommendations. Stapler shall be used only if specifically recommended by the manufacturer. Where gaps occur, the section shall be replaced or the gap repaired by applying adhesive under the lap and then stapling.

e. All Staples, including those used to repair factory self-seal lap systems, shall be coated with a vapor retarder coating. All seams, except those on factory self-seal systems shall be coated with vapor retarder coating.

f. Breaks and punctures in the jacket material shall be patched by wrapping a strip of jacket material around the pipe and securing it with adhesive, stapling, and coating with vapor retarder coating. The patch shall extend not less than 1-1/2 inches past the break.

g. At penetrations such as thermometers, the voids in the insulation shall be filled and sealed with vapor retarder coating.

3.2.2.4 Insulation for Fittings and Accessories

a. Pipe insulation shall be terminated 6 inches from each flange, union, valve, anchor, or fitting in all directions. The ends of the insulation shall be coated with vapor retarder coating.

b. Precut, preformed insulation for placement over fittings, flanges, unions, valves, anchors, and mechanical couplings shall conform to MICA plates: 5 for anchors; 10, 11, 12, & 13 for fittings; 14, 15, & 16 for valves; 17 for flanges and unions; and 18 for couplings. Precut, preformed insulation shall exhibit the same properties as the adjoining pipe insulation. Where precut/preformed is unavailable, rigid preformed pipe insulation sections may be segmented into the shape required. Insulation of the same thickness and conductivity as the adjoining pipe insulation shall be used. If nesting size insulation is used, the insulation shall be overlapped 2 inches or one pipe diameter. Loose fill mineral fiber or insulating cement shall be used to fill the voids. Elbows insulated using segments shall conform to MICA Tables 12.20 "Mitered Insulation Elbow'.

c. Upon completion of insulation installation on flanges, unions, valves, anchors, fittings and accessories, terminations and insulation not protected by factory vapor retarder jackets or PVC fitting covers shall be protected with two coats of vapor retarder coating with a minimum total thickness of 1/16 inch, applied with glass tape embedded between coats. Tape seams shall overlap 1 inch.The coating shall extend out onto the adjoining pipe insulation 2 inches.

d. Anchors attached directly to the pipe shall be insulated for a sufficient distance to prevent condensation but not less than 6 inches from the insulation surface.

e. Flexible connections at pumps and other equipment shall be insulated with 0.5 inch flexible cellular insulation, unless otherwise indicated.

f. Insulation shall be marked showing the location of unions, strainers, and check valves.

3.2.2.5 Optional PVC Fitting Covers

At the option of the Contractor, premolded, one or two piece PVC fitting covers may be used in lieu of the vapor retarder and embedded glass tape. Factory premolded insulation segments shall be used under the fitting covers for elbows. Insulation segments shall be the same thickness as adjoining pipe insulation and the insulation shall be protected with one coat of vapor retarder coating under the PVC cover. The covers shall be secured by PVC vapor retarder tape, adhesive, seal-welding or with tacks made for securing PVC covers. Seams in the cover, and tacks and laps to adjoining pipe insulation jacket, shall be sealed with vapor retarder tape to ensure that the assembly has a continuous vapor seal.

3.2.3 Aboveground Hot Pipelines

The following hot pipelines above 60 degrees F shall be insulated per Table II:

a. Domestic hot water supply & recirculating system.

b. Hot water heating.

3.2.3.1 Insulation Thickness

Insulation thickness for hot pipelines shall be determined using Table II.

LEGEND:

PF - Phenolic Foam
CG - Cellular Glass
CS - Calcium Silicate
MF - Mineral Fiber
FC - Flexible Cellular
PL - Perlite

Table II - Hot Piping Insulation Thickness
Pipe Size (inches)

Type of Service (degrees F)	Material	Runouts up to 2 in *	1 in & less	1.25 - 2 in	2.5 - 4 in	5 - 6 in	8 in & larger
Hot domestic water supply & recirculating system, & water defrost lines	CG		1.5	1.5	1.5	1.5	1.5
	FC		0.5	1.0	1.0	1.5	1.5
	PF		0.5	1.0	1.0	1.0	1.0
	MF		0.5	1.5	1.5	1.5	1.5

Table II - Hot Piping Insulation Thickness
Pipe Size (inches)

Type of Service (degrees F)	Material	Runouts up to 2 in *	1 in & less	1.25 - 2 in	2.5 - 4 in	5 - 6 in	8 in & larger
(200 F max)**							
Heating hot water, supply & return, & Heating oil (250 F max	CG	1.5	1.5	2.0	2.0	2.5	3.0
	PF	0.5	1.0	1.0	1.0	1.0	1.5
	MF	0.5	1.5	1.5	2.0	2.5	3.0
	CS	1.0	1.5	2.0	2.5	2.5	3.0

* When runouts to terminal units exceed 12 feet, the entire length of runout shall be insulated like the main feed pipe.

** Applies to recirculating sections of service or domestic hot water systems and first 8 feet from storage tank for non-recirculating systems.

3.2.3.2 Jacket for Insulated Hot Pipe

Insulation shall be covered, in accordance with manufacturer's recommendations, with a factory applied Type II jacket or field applied aluminum where required or seal welded PVC.

3.2.3.3 Insulation for Straight Runs

a. Insulation shall be applied to the pipe with joints tightly butted.

b. Longitudinal laps of the jacket material shall overlap not less than 1-1/2 inches, and butt strips 3 inches wide shall be provided for circumferential joints.

c. Laps and butt strips shall be secured with adhesive and stapled on 4 inch centers if not factory self-sealing. Adhesive may be omitted where pipe is concealed.

d. Factory self-sealing lap systems may be used when the ambient temperature is between 40 degrees and 120 degrees F and shall be installed in accordance with manufacturer's instructions. Laps and butt strips shall be stapled whenever there is nonadhesion of the system. Where gaps occur, the section shall be replaced or the gap repaired by applying adhesive under the lap and then stapling.

e. Breaks and punctures in the jacket material shall be patched by either wrapping a strip of jacket material around the pipe and securing with adhesive and staple on 4 inch centers (if not factory self-sealing), or patching with tape and sealing with a brush coat of vapor retarder coating. Adhesive may be omitted where pipe is concealed. Patch shall extend not less than 1-1/2 inches past the break.

f. Flexible cellular pipe insulation shall be installed by slitting tubular sections and applying onto piping or tubing. Alternately, whenever possible, slide unslit sections over the open ends of piping or tubing. All seams and butt joints shall be secured and sealed with adhesive. When using self seal products only the butt joints shall be secured with adhesive. Insulation shall be pushed on the pipe, never pulled. Stretching of insulation may result in open seams and joints. All edges shall be clean cut. Rough or jagged edges of the insulation shall not be permitted. Proper tools such as sharp knives shall be used. Type II sheet insulation when used on pipe larger than 6 inches shall not be stretched around the pipe. On pipes larger than 12 inches, adhere sheet insulation directly to the pipe on the lower 1/3 of the pipe.

3.2.3.4 Insulation for Fittings and Accessories

a. The run of the line pipe insulation shall have the ends brought up to the item.

b. Insulation of the same thickness and conductivity as the adjoining pipe insulation, either premolded or segmented, shall be placed around the item abutting the adjoining pipe insulation, or if nesting size insulation is used, overlapping 2 inches or one pipe diameter. Loose fill mineral fiber or insulating cement shall be used to fill the voids. Insulation for elbows less than 3 inch size shall be premolded. Insulation for elbows 3 inch size and larger shall be either premolded or segmented. Elbows insulated using segments shall have not less than 3 segments per elbow. Insulation may be wired or taped on until finish is applied.

c. Upon completion of installation of insulation on flanges, unions, valves, anchors, fittings and accessories, terminations and insulation not protected by factory vapor retarder jackets or PVC fitting covers shall be protected with two coats of adhesive applied with glass tape embedded between coats. Tape seams shall overlap 1 inch. Adhesive shall extend onto the adjoining insulation not less than 2 inches. The total dry film thickness shall be not less than 1/16 inch.

d. Insulation terminations shall be tapered to unions at a 45-degree angle.

e. At the option of the Contractor, factory premolded one- or two-piece PVC fitting covers may be used in lieu of the adhesive and embedded glass tape. Factory premolded segments or factory or field cut blanket insert insulation segments shall be used under the cover and shall be the same thickness as adjoining pipe insulation. The covers shall be secured by PVC vapor retarder tape, adhesive, seal-welding or with tacks made for securing PVC covers.

3.2.4 Piping Exposed to Weather

Piping exposed to weather shall be insulated and jacketed as specified for the applicable service inside the building. After this procedure, an aluminum jacket or PVC jacket shall be applied. PVC jacketing requires no factory applied jacket beneath it, however an all service jacket shall be applied if factory applied jacketing is not furnished. Flexible cellular

insulation exposed to weather shall be treated in accordance with paragraph INSTALLATION OF FLEXIBLE CELLULAR INSULATION.

3.2.4.1 Aluminum Jacket

The jacket for hot piping may be factory applied. The jacket shall overlap not less than 2 inches at longitudinal and circumferential joints and shall be secured with bands at not more than 12 inch centers. Longitudinal joints shall be overlapped down to shed water and located at 4 or 8 o'clock positions. Joints on piping 60 degrees F and below shall be sealed with caulking while overlapping to prevent moisture penetration. Where jacketing on piping 60 degrees F and below abuts an uninsulated surface, joints shall be caulked to prevent moisture penetration. Joints on piping above 60 degrees F shall be sealed with a moisture retarder.

3.2.4.2 Insulation for Fittings

Flanges, unions, valves, fittings, and accessories shall be insulated and finished as specified for the applicable service. Two coats of breather emulsion type weatherproof mastic (impermeable to water, permeable to air) recommended by the insulation manufacturer shall be applied with glass tape embedded between coats. Tape overlaps shall be not less than 1 inch and the adjoining aluminum jacket not less than 2 inches. Factory preformed aluminum jackets may be used in lieu of the above. Molded PVC fitting covers shall be used with PVC lagging and adhesive welded weather tight.

3.2.4.3 PVC Lagging

PVC lagging shall be ultraviolet resistant and adhesive welded weather tight with manufacturer's recommended adhesive. Installation shall include provision for thermal expansion.

3.2.5 Not Used.3.2.5.1 Not Used.3.2.5.2 [Enter Appropriate Subpart Title Here]

3.3 DUCT INSULATION INSTALLATION

3.3.1 Duct Insulation Thickness

Duct insulation thickness shall be in accordance with Table III.

Maximum thickness for flexible cellular insulation shall not exceed 25 mm, to comply with ASTM E 84 flame spread/smoke developed ratings of 25/50

Table III - Minimum Duct Insulation (inches)

Cold Air Ducts	2.0
Relief Ducts	1.5
Fresh Air Intake Ducts	1.5
Warm Air Ducts	2.0
Relief Ducts	1.5
Fresh Air Intake Ducts	2.0

Maximum thickness for flexible cellular insulation shall not exceed 1 inch to comply with ASTM E 84 flame spread/smoke developed ratings of 25/50.

3.3.2 Insulation and Vapor Retarder for Cold Air Duct

Insulation and vapor retarder for cold air duct below 60 degrees F, ducts and associated equipment shall be insulated to a thickness which is in accordance with Table III. The following shall be insulated:

a. Supply ducts.

b. Return air ducts.

c. Plenums.

d. Fresh air intake ducts.

Insulation for rectangular ducts shall be flexible type where concealed, minimum density 3/4 pcf and rigid type where exposed, minimum density 3 pcf. Insulation for round/oval ducts shall be flexible type, minimum density 3/4 pcf with a factory Type I or II jacket; or, a semi rigid board, minimum density 3 pcf, formed or fabricated to a tight fit, edges beveled and joints tightly butted and staggered, with a factory applied Type I or II all service jacket. Insulation for exposed ducts shall be provided with either a white, paintable, factory-applied Type I jacket or a vapor retarder jacket coating finish as specified. Insulation on concealed duct shall be provided with a factory-applied Type I or II vapor retarder jacket. The total dry film thickness shall be approximately 1/16 inch. Duct insulation shall be continuous through sleeves and prepared openings except fire wall penetrations. Duct insulation terminating at fire dampers, shall be continuous over the damper collar and retaining angle of fire dampers, which are exposed to unconditioned air and which may be prone to condensate formation. Duct insulation and vapor retarder shall cover the collar, neck, and any uninsulated surfaces of diffusers, registers and grills. Vapor retarder materials shall be applied to form a complete unbroken vapor seal over the insulation. Sheet Metal Duct shall be sealed in accordance with CEGS 15895 AIR SUPPLY, DISTRIBUTION, VENTILATION, AND EXHAUST SYSTEM.

3.3.2.1 Installation on Concealed Duct

a. For rectangular, oval or round ducts, insulation shall be attached in accordance with MICA installation procedures.

b. For rectangular and oval ducts, 24 inches and larger insulation shall be additionally secured to bottom of ducts by the use of mechanical fasteners. Fasteners shall be spaced on 16 inch centers and not more than 16 inches from duct corners.

c. For rectangular, oval and round ducts, mechanical fasteners shall be provided on sides of duct risers for all duct sizes. Fasteners shall be spaced on 16 inch centers and not more than 16 inches from duct corners.

d. Insulation shall be impaled on the mechanical fasteners (self stick pins) where used and shall be pressed thoroughly into the

adhesive. Care shall be taken to ensure vapor retarder jacket joints overlap 2 inches. The insulation shall not be compressed to a thickness less than that specified. Insulation shall be carried over standing seams and trapeze-type duct hangers.

e. Self-locking washers shall be installed where mechanical fasteners are used. The pin shall be trimmed back and bent over.

f. Jacket overlaps shall be secured with staples and tape as necessary to ensure a secure seal. Staples, tape and seams shall be coated with a brush coat of vapor retarder coating.

g. Breaks in the jacket material shall be covered with patches of the same material as the vapor retarder jacket. The patches shall extend not less than 2 inches beyond the break or penetration in all directions and shall be secured with tape and staples. Staples and tape joints shall be sealed with a brush coat of vapor retarder coating.

h. At jacket penetrations such as hangers, thermometers, and damper operating rods, voids in the insulation shall be filled and the penetration sealed with a brush coat of vapor retarder coating.

i. Insulation terminations and pin punctures shall be sealed and flashed with a reinforced vapor retarder coating finish or tape with a brush coat of vapor retarder coating.. The coating shall overlap the adjoining insulation and uninsulated surface 2 inches. Pin puncture coatings shall extend 2 inches from the puncture in all directions.

j. Where insulation standoff brackets occur, insulation shall be extended under the bracket and the jacket terminated at the bracket.

3.3.2.2 Not used

3.3.3 Insulation for Warm Air Duct

For warm air ducts above 60 degrees F, ducts and associated equipment shall be insulated to a thickness which is in accordance with Table III. The following shall be insulated:

a. Supply ducts.

b. Return air ducts.

c. Plenums.

d. Fresh air intake ducts.

Insulation for rectangular ducts shall be flexible type where concealed, minimum density 3/4 pcf; and rigid type where exposed, minimum density 3 pcf. Insulation on exposed ducts shall be provided with a white,

paintable, factory-applied Type II jacket, or finished with adhesive finish. Flexible type insulation shall be used for round ducts, minimum density 3/4 pcf with a factory-applied Type II jacket. Insulation on concealed duct shall be provided with a factory-applied Type II jacket. Adhesive finish where indicated to be used shall be accomplished by applying two coats of adhesive with a layer of glass cloth embedded between the coats. The total dry film thickness shall be approximately 1/16 inch.

Duct insulation shall be continuous through sleeves and prepared openings. Duct insulation shall terminate at fire dampers and flexible connections.

3.3.3.1 Installation on Concealed Duct

a. For rectangular, oval and round ducts, insulation shall be attached by applying adhesive around the entire perimeter of the duct in 6 inch wide strips on 12 inch centers.

b. For rectangular and oval ducts 24 inches and larger, insulation shall be secured to the bottom of ducts by the use of mechanical fasteners. Fasteners shall be spaced on 18 inch centers and not more than 18 inches from duct corner.

c. For rectangular, oval and round ducts, mechanical fasteners shall be provided on sides of duct risers for all duct sizes. Fasteners shall be spaced on 18 inch centers and not more than 18 inches from duct corners.

d. The insulation shall be impaled on the mechanical fasteners where used. The insulation shall not be compressed to a thickness less than that specified. Insulation shall be carried over standing seams and trapeze-type hangers.

e. Self-locking washers shall be installed where mechanical fasteners are used and the pin trimmed and bent over.

f. Insulation jacket shall overlap not less than 2 inches at joints and the lap shall be secured and stapled on 4 inch centers.

3.3.3.2 Not Used

3.3.4 Ducts Handling Air for Dual Purpose

For air handling ducts for dual purpose below and above 60 degrees F, ducts shall be insulated as specified for cold air duct.

3.3.5 Not Used

3.3.6 Duct Test Holes

After duct systems have been tested, adjusted, and balanced, breaks in the insulation and jacket shall be repaired in accordance with the applicable section of this specification for the type of duct insulation to be repaired.

3.3.7 Not Used

3.4 EQUIPMENT INSULATION INSTALLATION

3.4.1 General

Removable insulation sections shall be provided to cover parts of equipment which must be opened periodically for maintenance including vessel covers, fasteners, flanges and accessories. Equipment insulation shall be omitted on the following:

a. Handholes.

b. Boiler manholes.

c. Cleanouts.

d. ASME stamps.

e. Manufacturer's nameplates.

3.4.2 Not Used

3.4.3 Insulation for Hot Equipment

Insulation shall be furnished on equipment handling media above 60 degrees F including the following:

a. Water heaters.

3.4.3.1 Insulation

Insulation shall be suitable for the temperature encountered.

Insulation thickness for hot equipment shall be determined using Table IV:

Legend

FMF: Flexible Mineral Fiber

TABLE IV
Insulation Thickness for Hot Equipment (mm)

Equipment handling steam or other media to indicated pressure or temperature limit	Material	Thickness

103.4 kPa or 121 C	FMF	50 mm

TABLE IV
Insulation Thickness for Hot Equipment (Inches)

Equipment handling steam or media to indicated pressure or temperature limit:	Material	Thickness
15 psig or 250F	FMF	2.0 inches

3.4.3.2 Insulation of Pumps

Not used.

3.4.3.3 Other Equipment

a. Insulation shall be formed or fabricated to fit the equipment. To ensure a tight fit on round equipment, edges shall be beveled and joints shall be tightly butted and staggered.

b. Insulation shall be secured in place with bands or wires at intervals as recommended by the manufacturer but not greater than 12 inch centers except flexible cellular which shall be adhered. Insulation corners shall be protected under wires and bands with suitable corner angles.

3.4.4 Not Used

3.4.5 Not Used

-- End of Section --

SECTION TABLE OF CONTENTS

DIVISION 15 - MECHANICAL

SECTION 15190

GAS PIPING SYSTEMS

02/99

PART 1 GENERAL

1.1 REFERENCES
1.2 GENERAL REQUIREMENTS
1.2.1 Welding
1.2.2 Not Used
1.2.3 Standard Products
1.2.4 Verification of Dimensions
1.3 SUBMITTALS

PART 2 PRODUCTS

2.1 PIPE AND FITTINGS
2.1.1 Steel Pipe, Joints, and Fittings
2.1.2 Not Used
2.1.3 Not used
2.1.4 Steel Piping, Joints and Fittings
2.1.5 Not used
2.1.6 Not Used
2.1.7 Sealants for Steel Pipe Threaded Joints
2.1.8 Identification
2.1.9 Flange Gaskets
2.1.10 Pipe Threads
2.1.11 Escutcheons
2.1.12 Not Used
2.1.13 Not Used
2.1.14 Flexible Connectors
2.2 VALVES
2.2.1 Valves 2 Inches and Smaller
2.2.2 Not Used
2.3 PIPE HANGERS AND SUPPORTS
2.4 METERS, REGULATORS AND SHUTOFF VALVES

PART 3 EXECUTION

3.1 EXCAVATION AND BACKFILLING
3.2 GAS PIPING SYSTEM
3.2.1 Protection of Materials and Components
3.2.2 Workmanship and Defects
3.3 PROTECTIVE COVERING
3.3.1 Underground Metallic Pipe
3.3.2 Aboveground Metallic Piping Systems
3.3.2.1 Ferrous Surfaces
3.3.2.2 Not Used
3.4 INSTALLATION
3.4.1 Metallic Piping Installation

3.4.2 Not Used
3.4.3 Not Used
3.4.4 Not Used
3.4.5 Not Used
3.4.6 Concealed Piping in Buildings
3.4.6.1 Piping in Partitions
3.4.6.2 Piping in Floors
3.4.7 Aboveground Piping
3.4.8 Final Gas Connections
3.5 PIPE JOINTS
3.5.1 Threaded Metallic Joints
3.5.2 Welded Metallic Joints
3.5.3 Not Used
3.5.4 Not Used
3.5.5
3.5.6
3.6 PIPE SLEEVES
3.7 PIPES PENETRATING WATERPROOFING MEMBRANES
3.8 FIRE SEAL
3.9 ESCUTCHEONS
3.10 SPECIAL REQUIREMENTS
3.11 BUILDING STRUCTURE
3.12 PIPING SYSTEM SUPPORTS
3.13 ELECTRICAL BONDING AND GROUNDING
3.14 SHUTOFF VALVE
3.15
3.16 TESTING
3.16.1 Pressure Tests
3.16.2 Not Used
3.16.3 Test With Gas
3.16.4 Purging
3.16.5 Labor, Materials and Equipment

-- End of Section Table of Contents --

SECTION 15190

GAS PIPING SYSTEMS
02/99

PART 1 GENERAL

1.1 REFERENCES

The publications listed below form a part of this specification to the extent referenced. The publications are referred to in the text by basic designation only.

AMERICAN GAS ASSOCIATION (AGA)

AGA Mnl	(1994; Addenda/Correction Jan 1996) A.G.A. Plastic Pipe Manual for Gas Service

AMERICAN NATIONAL STANDARDS INSTITUTE

ANSI Z21.45	(1995) Flexible Connectors of Other Than All-Metal Construction for Gas Appliances
ANSI Z21.69	(1992; Z21.69a) Connectors for Movable Gas Appliances

AMERICAN SOCIETY OF MECHANICAL ENGINEERS (ASME)

ASME B1.20.1	(1983; R 1992) Pipe Threads, General Purpose (Inch)
ASME B16.3	(1992) Malleable Iron Threaded Fittings
ASME B16.5	(1996; B16.5a) Pipe Flanges and Flanged Fittings NPS 1/2 thru NPS 24
ASME B16.9	(1993) Factory-Made Wrought Steel Buttwelding Fittings
ASME B16.11	(1996) Forged Fittings, Socket-Welding and Threaded
ASME B16.21	(1992) Nonmetallic Flat Gaskets for Pipe Flanges
ASME B16.33	(1990) Manually Operated Metallic Gas Valves for Use in Gas Piping Systems Up to 125 psig (Sizes 1/2 through 2)
ASME B31.1	(1995; B31.1a; B31.1b; B31.1c) Power Piping
ASME B31.2	(1968) Fuel Gas Piping
ASME B36.10M	(1996) Welded and Seamless Wrought Steel Pipe
ASME BPV IX	(1998) Boiler and Pressure Vessel Code;

	Section IX, Welding and Brazing Qualifications

MANUFACTURERS STANDARDIZATION SOCIETY OF THE VALVE AND FITTINGS INDUSTRY (MSS)

MSS SP-25	(1998) Standard Marking System for Valves, Fittings, Flanges and Unions
MSS SP-58	(1993) Pipe Hangers and Supports - Materials, Design and Manufacture
MSS SP-69	(1996) Pipe Hangers and Supports - Selection and Application

NATIONAL FIRE PROTECTION ASSOCIATION (NFPA)

NFPA NFPA 54/ANSI Z223.1	(1996; Errata) National Fuel Gas Code
NFPA 70	(1999) National Electrical Code

THE SOCIETY FOR PROTECTIVE COATING (SSPC)

SSPC SP 6/NACE 3	(1994) Commercial Blast Cleaning

UNDERWRITERS LABORATORIES (UL)

UL Gas&Oil Dir	(1996; Supple)Gas and Oil Equipment Directory

1.2 GENERAL REQUIREMENTS

1.2.1 Welding

Piping shall be welded in accordance with qualified procedures using performance qualified welders and welding operators. Procedures and welders shall be qualified in accordance with ASME BPV IX. Welding procedures qualified by others, and welders and welding operators qualified by another employer may be accepted as permitted by ASME B31.1. The Contracting Officer shall be notified at least 24 hours in advance of tests and the tests shall be performed at the work site if practicable. The Contracting Officer shall be furnished with a copy of qualified procedures and a list of names and identification symbols of qualified welders and welding operators. The welder or welding operator shall apply his assigned symbol near each weld he makes as a permanent record. Structural members shall be welded in accordance with Section 05090 WELDING, STRUCTURAL.

1.2.2 Not Used

1.2.3 Standard Products

Materials and equipment shall be the standard products of a manufacturer regularly engaged in the manufacture of the products and shall essentially duplicate items that have been in satisfactory use for at least 2 years prior to bid opening. Asbestos or products containing asbestos shall not be used. Manufacturer's descriptive data and installation instructions shall be submitted for approval for compression-type mechanical joints used in joining dissimilar materials and for insulating joints. Valves, flanges and fittings shall be marked in accordance with MSS SP-25.

1.2.4 Verification of Dimensions

The Contractor shall become familiar with all details of the work, verify all dimensions in the field, and shall advise the Contracting Officer of any discrepancy before performing the work.

1.3 SUBMITTALS

Not Used.

PART 2 PRODUCTS

2.1 PIPE AND FITTINGS

2.1.1 Steel Pipe, Joints, and Fittings

Steel pipe shall conform to ASME B36.10M. Malleable-iron threaded fittings shall conform to ASME B16.3. Steel pipe flanges and flanged fittings including bolts, nuts, and bolt pattern shall be in accordance with ASME B16.5. Wrought steel buttwelding fittings shall conform to ASME B16.9. Socket welding and threaded forged steel fittings shall conform to ASME B16.11.

2.1.2 Not Used

2.1.3 Not used

2.1.4 Steel Piping, Joints and Fittings

Steel piping shall conform to ASTM A 53 Grade B Schedule 40. Piping joints shall conform to ASTM A197 and ANSI B16.3

2.1.5 Not used

2.1.6 Not Used

2.1.7 Sealants for Steel Pipe Threaded Joints

Joint sealing compound shall be listed in UL Gas&Oil Dir, Class 20 or less. Tetrafluoroethylene tape shall conform to UL Gas&Oil Dir.

2.1.8 Identification

Pipe flow markings and metal tags shall be provided as required.

2.1.9 Flange Gaskets

Gaskets shall be nonasbestos compressed material in accordance with ASME B16.21, 1/16 inch thickness, full face or self-centering flat ring type. The gaskets shall contain aramid fibers bonded with styrene butadiene rubber (SBR) or nitrile butadiene rubber (NBR) suitable for a maximum 600 degree F service. NBR binder shall be used for hydrocarbon service.2.1.10 Pipe Threads

Pipe threads shall conform to ASME B1.20.1.

2.1.11 Escutcheons

Escutcheons shall be chromium-plated steel or chromium-plated brass, either one piece or split pattern, held in place by internal spring tension or set screw.

2.1.12 Not Used

2.1.13 Not Used

2.1.14 Flexible Connectors

Flexible connectors for connecting gas utilization equipment to building gas piping shall conform to ANSI Z21.45. Flexible connectors for movable food service equipment shall conform to ANSI Z21.69.

2.2 VALVES

Valves shall be suitable for shutoff or isolation service and shall conform to the following:

2.2.1 Valves 2 Inches and Smaller

Valves 2 inches and smaller shall conform to ASME B16.33 and shall be of materials and manufacture compatible with system materials used.

2.2.2 Not Used

2.3 PIPE HANGERS AND SUPPORTS

Pipe hangers and supports shall conform to MSS SP-58 and MSS SP-69.

2.4 METERS, REGULATORS AND SHUTOFF VALVES

Meters, regulators and shutoff valves shall be as specified in Section 02556 GAS DISTRIBUTION SYSTEM.

PART 3 EXECUTION

3.1 EXCAVATION AND BACKFILLING

Earthwork shall be as specified in Section 02316 EXCAVATION, TRENCHING AND BACKFILLING FOR UTILITIES SYSTEMS.

3.2 GAS PIPING SYSTEM

Gas piping system shall be from the point of delivery, defined as the outlet of the meter set assembly, specified in Section 02556 GAS DISTRIBUTION SYSTEM, to the connections to each gas utilization device.

3.2.1 Protection of Materials and Components

Pipe and tube openings shall be closed with caps or plugs during installation. Equipment shall be protected from dirt, water, and chemical or mechanical damage. At the completion of all work, the entire system shall be thoroughly cleaned.

3.2.2 Workmanship and Defects

Piping, tubing and fittings shall be clear and free of cutting burrs and

defects in structure or threading and shall be thoroughly brushed and chip-and scale-blown. Defects in piping, tubing or fittings shall not be repaired. When defective piping, tubing, or fittings are located in a system, the defective material shall be replaced.

3.3 PROTECTIVE COVERING

3.3.1 Underground Metallic Pipe

Buried metallic piping shall be protected from corrosion with protective coatings as specified in Section 02556 GAS DISTRIBUTION SYSTEM. When dissimilar metals are joined underground, gastight insulating fittings shall be used.

3.3.2 Aboveground Metallic Piping Systems

3.3.2.1 Ferrous Surfaces

Shop primed surfaces shall be touched up with ferrous metal primer. Surfaces that have not been shop primed shall be solvent cleaned. Surfaces that contain loose rust, loose mill scale and other foreign substances shall be mechanically cleaned by power wire brushing or commercial sand blasted conforming to SSPC SP 6/NACE 3 and primed with ferrous metal primer or vinyl type wash coat. Primed surface shall be finished with two coats of exterior oil paint or vinyl paint.

3.3.2.2 Not Used

3.4 INSTALLATION

Installation of the gas system shall be in conformance with the manufacturer's recommendations and applicable provisions of NFPA NFPA 54/ANSI Z223.1, AGA Mnl, and as indicated. Pipe cutting shall be done without damage to the pipe. Unless otherwise authorized, cutting shall be done by an approved type of mechanical cutter. Wheel cutters shall be used where practicable. On steel pipe 6 inches and larger, an approved gas cutting and beveling machine may be used. Cutting of thermoplastic and fiberglass pipe shall be in accordance with AGA Mnl.

3.4.1 Metallic Piping Installation

Underground piping shall be buried a minimum of 18 inches below grade. Changes in direction of piping shall be made with fittings only; mitering or notching pipe to form elbows and tees or other similar type construction will not be permitted. Branch connection may be made with either tees or forged branch outlet fittings. Branch outlet fittings shall be forged, flared for improvement of flow where attached to the run, and reinforced against external strains. Aluminum alloy pipe shall not be used in exterior locations or underground.

3.4.2 Not Used

3.4.3 Not Used

3.4.4 Not Used

3.4.5 Not Used

3.4.6 Concealed Piping in Buildings

When installing piping which is to be concealed, unions, tubing fittings, running threads, right- and left-hand couplings, bushings, and swing joints made by combinations of fittings shall not be used.

3.4.6.1 Piping in Partitions

Concealed piping shall be located in hollow rather than solid partitions. Tubing passing through walls or partitions shall be protected against physical damage.

3.4.6.2 Piping in Floors

Piping in solid floors shall be laid in channels suitably covered to permit access to the piping with minimum damage to the building.

3.4.7 Aboveground Piping

Aboveground piping shall be run as straight as practicable along the alignment indicated and with a minimum of joints. Piping shall be separately supported. Exposed horizontal piping shall not be installed farther than 6 inches from nearest parallel wall in laundry areas where clothes hanging could be attempted.

3.4.8 Final Gas Connections

Unless otherwise specified, final connections shall be made with rigid metallic pipe and fittings. Flexible connectors may be used for final connections to gas utilization equipment. In addition to cautions listed in instructions required by ANSI standards for flexible connectors, insure that flexible connectors do not pass through equipment cabinet. Provide accessible gas shutoff valve and coupling for each gas equipment item.

3.5 PIPE JOINTS

Pipe joints shall be designed and installed to effectively sustain the longitudinal pull-out forces caused by contraction of the piping or superimposed loads.

3.5.1 Threaded Metallic Joints

Threaded joints in metallic pipe shall have tapered threads evenly cut and shall be made with UL approved graphite joint sealing compound for gas service or tetrafluoroethylene tape applied to the male threads only. Threaded joints up to 1-1/2 inches in diameter may be made with approved tetrafluoroethylene tape. Threaded joints up to 2 inches in diameter may be made with approved joint sealing compound. After cutting and before threading, pipe shall be reamed and burrs shall be removed. Caulking of threaded joints to stop or prevent leaks shall not be permitted.

3.5.2 Welded Metallic Joints

Beveling, alignment, heat treatment, and inspection of welds shall conform to ASME B31.2. Weld defects shall be removed and repairs made to the weld, or the weld joints shall be entirely removed and rewelded. After filler metal has been removed from its original package, it shall be protected or stored so that its characteristics or welding properties are not affected adversely. Electrodes that have been wetted or have lost any of their coating shall not be used.

3.5.3 Not Used

3.5.4 Not Used 3.5.5 Not Used

3.5.6 Not Used

3.6 PIPE SLEEVES

Pipes passing through concrete or masonry walls or concrete floors or roofs shall be provided with pipe sleeves fitted into place at the time of construction. Sleeves shall not be installed in structural members except where indicated or approved. All rectangular and square openings shall be as detailed. Each sleeve shall extend through its respective wall, floor or roof, and shall be cut flush with each surface, except in mechanical room floors not located on grade where clamping flanges or riser pipe clamps are used. Sleeves in mechanical room floors above grade shall extend at least 4 inches above finish floor. Unless otherwise indicated, sleeves shall be large enough to provide a minimum clearance of 1/4 inch all around the pipe. Sleeves in bearing walls, waterproofing membrane floors, and wet areas shall be steel pipe. Sleeves in nonbearing walls, floors, or ceilings may be steel pipe, galvanized sheet metal with lock-type longitudinal seam, or moisture-resistant fiber or plastic. For penetrations of fire walls, fire partitions and floors which are not on grade, the annular space between the pipe and sleeve shall be sealed with firestopping material and sealant that meet the requirement of Section 07840 FIRESTOPPING.

3.7 PIPES PENETRATING WATERPROOFING MEMBRANES

Pipes penetrating waterproofing membranes shall be installed as specified in Section 15400 PLUMBING, GENERAL PURPOSE.

3.8 FIRE SEAL

Penetrations of fire rated partitions, walls and floors shall be in accordance with Section 07840 FIRESTOPPING.

3.9 ESCUTCHEONS

Escutcheons shall be provided for all finished surfaces where gas piping passes through floors, walls, or ceilings except in boiler, utility, or equipment rooms.

3.10 SPECIAL REQUIREMENTS

Drips, grading of the lines, freeze protection, and branch outlet locations shall be as shown and shall conform to the requirements of NFPA NFPA 54/ANSI Z223.1.

3.11 BUILDING STRUCTURE

Building structure shall not be weakened by the installation of any gas piping. Beams or joists shall not be cut or notched.

3.12 PIPING SYSTEM SUPPORTS

Gas piping systems in buildings shall be supported with pipe hooks, metal pipe straps, bands or hangers suitable for the size of piping or tubing.

Gas piping system shall not be supported by other piping. Spacing of supports in gas piping and tubing installations shall conform to the requirements of NFPA NFPA 54/ANSI Z223.1. The selection and application of supports in gas piping and tubing installations shall conform to the requirements of MSS SP-69. In the support of multiple pipe runs on a common base member, a clip or clamp shall be used where each pipe crosses the base support member. Spacing of the base support members shall not exceed the hanger and support spacing required for any of the individual pipes in the multiple pipe run. The clips or clamps shall be rigidly connected to the common base member. A clearance of 1/8 inch shall be provided between the pipe and clip or clamp for all piping which may be subjected to thermal expansion.

3.13 ELECTRICAL BONDING AND GROUNDING

A gas piping system within a building shall be electrically continuous and bonded to a grounding electrode as required by NFPA 70.

3.14 SHUTOFF VALVE

Main gas shutoff valve controlling the gas piping system shall be easily accessible for operation and shall be installed as indicated, protected from physical damage, and marked with a metal tag to clearly identify the piping system controlled.

3.15 Not Used

3.16 TESTING

Before any section of a gas piping system is put into service, it shall be carefully tested to assure that it is gastight. Prior to testing, the system shall be blown out, cleaned and cleared of all foreign material. Each joint shall be tested by means of an approved gas detector, soap and water, or an equivalent nonflammable solution. Testing shall be completed before any work is covered, enclosed, or concealed. All testing of piping systems shall be done with due regard for the safety of employees and the public during the test. Bulkheads, anchorage and bracing suitably designed to resist test pressures shall be installed if necessary. Oxygen shall not be used as a testing medium.

3.16.1 Pressure Tests

Before appliances are connected, piping systems shall be filled with air or an inert gas and shall withstand a minimum pressure of 3 pounds gauge for a period of not less than 10 minutes as specified in NFPA NFPA 54/ANSI Z223.1 without showing any drop in pressure. Oxygen shall not be used. Pressure shall be measured with a mercury manometer, slope gauge, or an equivalent device so calibrated as to be read in increments of not greater than 0.1 pound. The source of pressure shall be isolated before the pressure tests are made.

3.16.2 Not Used

3.16.3 Test With Gas

Before turning gas under pressure into any piping, all openings from which gas can escape shall be closed. Immediately after turning on the gas, the piping system shall be checked for leakage by using a laboratory-certified gas meter, an appliance orifice, a manometer, or equivalent device. All

testing shall conform to the requirements of NFPA NFPA 54/ANSI Z223.1. If leakage is recorded, the gas supply shall be shut off, the leak shall be repaired, and the tests repeated until all leaks have been stopped.

3.16.4 Purging

After testing is completed, and before connecting any appliances, all gas piping shall be fully purged. LPG piping tested using fuel gas with appliances connected does not require purging. Piping shall not be purged into the combustion chamber of an appliance. The open end of piping systems being purged shall not discharge into confined spaces or areas where there are ignition sources unless the safety precautions recommended in NFPA NFPA 54/ANSI Z223.1 are followed.

3.16.5 Labor, Materials and Equipment

All labor, materials and equipment necessary for conducting the testing and purging shall be furnished by the Contractor.

-- End of Section --

SECTION TABLE OF CONTENTS

DIVISION 15 - MECHANICAL

SECTION 15400

PLUMBING, GENERAL PURPOSE

08/94

PART 1 GENERAL

1.1 REFERENCES
1.2 STANDARD PRODUCTS
1.3 PERFORMANCE REQUIREMENTS
1.3.1 Welding
1.3.2 Cathodic Protection and Pipe Joint Bonding
1.4 ELECTRICAL WORK
1.5 SUBMITTALS
1.6 REGULATORY REQUIREMENTS
1.7 PROJECT/SITE CONDITIONS

PART 2 PRODUCTS

2.1 MATERIALS
2.1.1 Pipe Joint Materials
2.1.2 Miscellaneous Materials
2.1.3 Pipe Insulation Material
2.2 PIPE HANGERS, INSERTS, AND SUPPORTS
2.3 VALVES
2.3.1 Backwater Valves
2.3.2 Wall Faucets
2.3.3 Wall Hydrants
2.3.4 Lawn Faucets
2.3.5 Yard Hydrants
2.3.6 Relief Valves
2.3.7 Thermostatic Mixing Valves
2.4 FIXTURES
2.4.1 Lavatories
2.4.2 Not Used
2.5 BACKFLOW PREVENTERS
2.6 DRAINS
2.6.1 Floor and Shower Drains
2.6.1.1 Metallic Shower Pan Drains
2.6.1.2 Drains and Backwater Valves
2.6.2 Area Drains
2.6.3 Hub Drains
2.6.4 Storm Interceptor
2.6.5 Pit Drains
2.6.6 Sight Drains
2.6.7 Roof Drains and Expansion Joints
2.7 SHOWER PAN
2.7.1 Sheet Copper
2.7.2 Plasticized Polyvinyl Chloride Shower Pan Material
2.7.3 Nonplasticized Polyvinyl Chloride (PVC) Shower Pan Material
2.8 TRAPS

2.9 Not Used
2.10 WATER HEATERS
2.10.1 Automatic Storage Type
2.10.1.1 Not Used
2.10.1.2 Gas-Fired Type
2.10.1.3 Not Used
2.10.1.4 Not Used
2.10.2 Not Used
2.10.3 Not Used
2.11 Not Used
2.12 Not Used
2.13 Not Used
2.14 Not Used
2.15 DOMESTIC WATER SERVICE METER

PART 3 EXECUTION

3.1 GENERAL INSTALLATION REQUIREMENTS
3.1.1 Water Pipe, Fittings, and Connections
3.1.1.1 Utilities
3.1.1.2 Cutting and Repairing
3.1.1.3 Protection of Fixtures, Materials, and Equipment
3.1.1.4 Mains, Branches, and Runouts
3.1.1.5 Pipe Drains
3.1.1.6 Expansion and Contraction of Piping
3.1.1.7 Commercial-Type Water Hammer Arresters
3.1.2 Not Used
3.1.3 Joints
3.1.3.1 Threaded
3.1.3.2 Mechanical Couplings
3.1.3.3 Union and Flanged
3.1.3.4 Cast Iron Soil, Waste and Vent Pipe
3.1.3.5 Copper Tube and Pipe
3.1.3.6 Plastic Pipe
3.1.3.7 Not Used
3.1.3.8 Not Used
3.1.3.9 Other Joint Methods
3.1.4 Dissimilar Pipe Materials
3.1.5 Corrosion Protection for Buried Pipe and Fittings
3.1.5.1 Cast Iron and Ductile Iron
3.1.5.2 Steel
3.1.6 Pipe Sleeves and Flashing
3.1.6.1 Sleeve Requirements
3.1.6.2 Flashing Requirements
3.1.6.3 Waterproofing
3.1.6.4 Optional Counterflashing
3.1.6.5 Pipe Penetrations of Slab on Grade Floors
3.1.7 Fire Seal
3.1.8 Supports
3.1.8.1 General
3.1.8.2
3.1.8.3 Pipe Hangers, Inserts, and Supports
3.1.9 Welded Installation
3.1.10 Pipe Cleanouts
3.2 WATER HEATERS AND HOT WATER STORAGE TANKS
3.2.1 Relief Valves
3.2.2 Installation of Gas- Fired Water Heater
3.2.3 Not Used
3.2.4 Heat Traps

3.2.5 Connections to Water Heaters
3.3 FIXTURES AND FIXTURE TRIMMINGS
3.3.1 Fixture Connections
3.3.2 Flushometer Valves
3.3.3 Height of Fixture Rims Above Floor
3.3.4 Shower Bath Outfits
3.3.5 Fixture Supports
3.3.5.1 Support for Solid Masonry Construction
3.3.5.2 Support for Cellular-Masonry Wall Construction
3.3.5.3 Support for Steel Stud Frame Partitions
3.3.5.4 Support for Wood Stud Construction
3.3.5.5 Wall-Mounted Water Closet Gaskets
3.3.6 Backflow Prevention Devices
3.3.7 Access Panels
3.3.8 Sight Drains
3.3.9 Traps
3.3.10 Shower Pans
3.3.10.1 General
3.3.10.2 Metal Shower Pans
3.3.10.3 Nonplasticized Chlorinated Polyethylene Shower Pans
3.3.10.4 Nonplasticized Polyvinyl Chloride (PVC) Shower Pans
3.4 Not Used
3.5 Not Used
3.6 IDENTIFICATION SYSTEMS
3.6.1 Identification Tags
3.6.2 Color Coding
3.6.3 Color Coding Scheme for Hidden Utility Components
3.7 ESCUTCHEONS
3.8 PAINTING
3.9 TESTS, FLUSHING AND DISINFECTION
3.9.1 Plumbing System
3.9.1.1 Test of Backflow Prevention Assemblies
3.9.1.2 Shower Pans
3.9.2 Defective Work
3.9.3 System Flushing
3.9.4 Operational Test
3.9.5 Disinfection
3.10 PLUMBING FIXTURE SCHEDULE
3.11 POSTED INSTRUCTIONS
3.12 PERFORMANCE OF WATER HEATING EQUIPMENT
3.12.1 Storage Water Heaters
3.12.1.1 Not Used
3.12.1.2 Gas
3.12.1.3 Not Used
3.12.2 Not Used
3.12.3 [Enter Appropriate Subpart Title Here]
3.12.3.1 [Enter Appropriate Subpart Title Here]
3.12.3.2 Not Used
3.12.4 Not Used
3.13 TABLES

-- End of Section Table of Contents --

SECTION 15400

PLUMBING, GENERAL PURPOSE
08/94

PART 1 GENERAL

1.1 REFERENCES

The publications listed below form a part of this specification to the extent referenced. The publications are referred to in the text by basic designation only.

AMERICAN NATIONAL STANDARDS INSTITUTE (ANSI)

ANSI Z21.10.1	(1993; Z21.10.1a; Z21.10.1b; Z21.10.1c) Gas Water Heaters Vol. I Storage Water Heaters with Input Ratings of 75,000 Btu Per Hour or Less
ANSI Z21.10.3	(1993; Z21.10.3a; Z21.10.3b) Gas Water Heaters Vol. III Storage, With Input Ratings Above 75,000 Btu Per Hour, Circulating and Instantaneous Water Heaters
ANSI Z21.22	(1986; Z21.22a) Relief Valves and Automatic Gas Shutoff Devices for Hot Water Supply Systems

AMERICAN SOCIETY FOR TESTING AND MATERIALS (ASTM)

ASTM A 47	(1990; R 1995) Ferritic Malleable Iron Castings
ASTM A 47M	(1990; R 1996) Ferritic Malleable Iron Castings
ASTM A 53	(1997) Pipe, Steel, Black and Hot-Dipped, Zinc-Coated, Welded and Seamless
ASTM A 74	(1996) Cast Iron Soil Pipe and Fittings
ASTM A 105/A 105M	(1996) Carbon Steel Forgings for Piping Applications
ASTM A 183	(1983; R 1990) Carbon Steel Track Bolts and Nuts
ASTM A 193/A 193M	(1997a) Alloy-Steel and Stainless Steel Bolting Materials for High-Temperature Service
ASTM A 516/A 516M	(1990; R 1996) Pressure Vessel Plates,

	Carbon Steel, for Moderate- and Lower-Temperature Service
ASTM A 518	(1992; R 1997) Corrosion-Resistant High-Silicon Iron Castings
ASTM A 518M	(1992; R 1997) Corrosion-Resistant High-Silicon Iron Castings (Metric)
ASTM A 536	(1984; R 1993) Ductile Iron Castings
ASTM A 733	(1993) Welded and Seamless Carbon Steel and Austenitic Stainless Steel Pipe Nipples
ASTM A 888	(1996) Hubless Cast Iron Soil Pipe and Fittings for Sanitary and Storm Drain, Waste, and Vent Piping Applications
ASTM B 32	(1996) Solder Metal
ASTM B 42	(1996) Seamless Copper Pipe, Standard Sizes
ASTM B 75	(1995a) Seamless Copper Tube
ASTM B 88	(1996) Seamless Copper Water Tube
ASTM B 88M	(1996) Seamless Copper Water Tube (Metric)
ASTM B 306	(1996) Copper Drainage Tube (DWV)
ASTM B 641	(1993) Seamless and Welded Copper Distribution Tube (Type D)
ASTM B 813	(1993) Liquid and Paste Fluxes for Soldering Applications of Copper and Copper Alloy Tube
ASTM B 828	(1992) Making Capillary Joints by Soldering of Copper and Copper Alloy Tube and Fittings
ASTM C 564	(1995a) Rubber Gaskets for Cast Iron Soil Pipe and Fittings
ASTM C 920	(1995) Elastomeric Joint Sealants
ASTM D 638	(1996) Tensile Properties of Plastics
ASTM D 638M	(1996) Tensile Properties of Plastics (Metric)

ASTM D 1248	(1984; R 1989) Polyethylene Plastics Molding and Extrusion Materials
ASTM D 1785	(1996a) Poly(Vinyl Chloride) (PVC) Plastic Pipe, Schedules 40, 80, and 120
ASTM D 2235	(1996a) Solvent Cement for Acrylonitrile-Butadiene-Styrene (ABS) Plastic Pipe and Fittings
ASTM D 2447	(1995) Polyethylene (PE) Plastic Pipe, Schedules 40 and 80, Based on Outside Diameter
ASTM D 2466	(1996a) Poly(Vinyl Chloride) (PVC) Plastic Pipe Fittings, Schedule 40
ASTM D 2467	(1996a) Poly(Vinyl Chloride) (PVC) Plastic Pipe Fittings, Schedule 80
ASTM D 2564	(1996a) Solvent Cements for Poly(Vinyl Chloride) (PVC) Plastic Piping Systems
ASTM D 2661	(1996) Acrylonitrile-Butadiene-Styrene (ABS) Schedule 40 Plastic Drain, Waste, and Vent Pipe and Fittings
ASTM D 2665	(1996) Poly(Vinyl Chloride) (PVC) Plastic Drain, Waste, and Vent Pipe and Fittings
ASTM D 2672	(1996a) Joints for IPS PVC Pipe Using Solvent Cement
ASTM D 2683	(1995) Socket-Type Polyethylene Fittings for Outside Diameter-Controlled Polyethylene Pipe and Tubing
ASTM D 2737	(1996a) Polyethylene (PE) Plastic Tubing
ASTM D 2846	(1996) Chlorinated Poly(Vinyl Chloride) (CPVC) Plastic Hot- and Cold-Water Distribution Systems
ASTM D 2855	(1996) Making Solvent-Cemented Joints with Poly(Vinyl Chloride) (PVC) Pipe and Fittings

ASTM D 3138	(1995) Solvent Cements for Transition Joints Between Acrylonitrile-Butadiene-Styrene (ABS) and Poly(Vinyl Chloride) (PVC) Non-Pressure Piping Components
ASTM D 3139	(1996a) Joints for Plastic Pressure Pipes Using Flexible Elastomeric Seals
ASTM D 3212	(1996a) Joints for Drain and Sewer Plastic Pipes Using Flexible Elastomeric Seals
ASTM D 3308	(1991a) PTFE Resin Skived Tape
ASTM D 3311	(1994) Drain, Waste, and Vent (DWV) Plastic Fittings Patterns
ASTM D 4551	(1996) Poly(Vinyl Chloride) (PVC) Plastic Flexible Concealed Water-Containment Membrane
ASTM E 1	(1995) ASTM Thermometers
ASTM E 96	(1995) Water Vapor Transmission of Materials
ASTM F 409	(1995) Thermoplastic Accessible and Replaceable Plastic Tube and Tubular Fittings
ASTM F 437	(1993) Threaded Chlorinated Poly(Vinyl Chloride) (CPVC) Plastic Pipe Fittings, Schedule 80
ASTM F 438	(1993) Socket-Type Chlorinated Poly(Vinyl Chloride) (CPVC) Plastic Pipe Fittings, Schedule 40
ASTM F 439	(1993a) Socket-Type Chlorinated Poly(Vinyl Chloride) (CPVC) Plastic Pipe Fittings, Schedule 80
ASTM F 441	(1995) Chlorinated Poly(Vinyl Chloride) (CPVC) Plastic Pipe, Schedules 40 and 80
ASTM F 442	(1994) Chlorinated Poly(Vinyl Chloride) (CPVC) Plastic Pipe (SDR-PR)
ASTM F 477	(1995) Elastomeric Seals (Gaskets) for Joining Plastic Pipe
ASTM F 493	(1993a) Solvent Cements for Chlorinated Poly(Vinyl Chloride) (CPVC) Plastic Pipe

	and Fittings
ASTM F 628	(1995) Acrylonitrile-Butadiene-Styrene (ABS) Schedule 40 Plastic Drain, Waste, and Vent Pipe with a Cellular Core
ASTM F 891	(1993a) Coextruded Poly(Vinyl Chloride) (PVC) Plastic Pipe with a Cellular Core
ASTM F 1760	(1996) Poly(Vinyl Chloride) (PVC) Non-Pressure Plastuc Pipe Having Reprocessed-Recycled Content.

ASME INTERNATIONAL (ASME)

ASME A112.1.2	(1991) Air Gaps in Plumbing Systems
ASME A112.6.1M	(1997) Supports for Off-the-Floor Plumbing Fixtures for Public Use
ASME A112.14.1	(1975; R 1990) Backwater Valves
ASME A112.19.1M	(1994) Enameled Cast Iron Plumbing Fixtures
ASME A112.19.2M	(1995; Errata) Vitreous China Plumbing Fixtures
ASME A112.21.1M	(1991) Floor Drains
ASME A112.21.2M	(1983) Roof Drains
ASME A112.36.2M	(1991) Cleanouts
ASME B1.20.1	(1983; R 1992) Pipe Threads, General Purpose (Inch)
ASME B16.3	(1992) Malleable Iron Threaded Fittings
ASME B16.4	(1992) Gray Iron Threaded Fittings
ASME B16.5	(1996) Pipe Flanges and Flanged Fittings NPS 1/2 thru NPS 24
ASME B16.12	(1991) Cast Iron Threaded Drainage Fittings
ASME B16.15	(1985; R 1994) Cast Bronze Threaded Fittings Classes 125 and 250
ASME B16.18	(1984; R 1994) Cast Copper Alloy Solder Joint Pressure Fittings
ASME B16.21	(1992) Nonmetallic Flat Gaskets for Pipe Flanges
ASME B16.22	(1995) Wrought Copper and Copper Alloy Solder Joint Pressure Fittings

ASME B16.23	(1992; Errata Jan 1994) Cast Copper Alloy Solder Joint Drainage Fittings - DWV
ASME B16.24	(1991; Errata) Cast Copper Alloy Pipe Flanges, Class 150, 300, 400, 600, 900, 1500, and 2500, and Flanged Fittings, Class 150 and 300
ASME B16.29	(1994) Wrought Copper and Wrought Copper Alloy Solder Joint Drainage Fittings - DWV
ASME B16.34	(1996) Valves - Flanged, Threaded, and Welding End
ASME B16.39	(1986; R 1994) Malleable Iron Threaded Pipe Unions Classes 150, 250, and 300
ASME B40.1	(1991) Gauges - Pressure Indicating Dial Type - Elastic Element

AMERICAN SOCIETY OF SANITARY ENGINEERING (ASSE)

ASSE ANSI/ASSE 1001	(1990) Pipe Applied Atmospheric Type Vacuum Breakers
ASSE ANSI/ASSE 1003	(1995) Water Pressure Reducing Valves for Domestic Water Supply Systems
ASSE 1005	(1986) Water Heater Drain Valves - 3/4-Inch Iron Pipe Size
ASSE ANSI/ASSE 1011	(1995) Hose Connection Vacuum Breakers
ASSE ANSI/ASSE 1012	(1995) Backflow Preventers with Intermediate Atmospheric Vent
ASSE 1013	(1993) Reduced Pressure Principle Backflow Preventers
ASSE 1018	(1986) Trap Seal Primer Valves Water Supply Fed

AMERICAN WATER WORKS ASSOCIATION (AWWA)

AWWA-01	(1995) Standard Methods for the Examination of Water and Wastewater
AWWA B300	(1992) Hypochlorites
AWWA B301	(1992) Liquid Chlorine
AWWA ANSI/AWWA C105/A21.5	(1993) Polyethylene Encasement for Ductile-Iron Pipe Systems
AWWA C203	(1991) Coal-Tar Protective Coatings and Linings for Steel Water Pipelines - Enamel

	and Tape - Hot-Applied
AWWA C606	(1987) Grooved and Shouldered Joints
AWWA M20	(1973) Manual: Water Chlorination Principles and Practices

AMERICAN WELDING SOCIETY (AWS)

AWS A5.8	(1992) Filler Metals for Brazing and Braze Welding
AWS B2.2	(1991) Brazing Procedure and Performance Qualification

CAST IRON SOIL PIPE INSTITUTE (CISPI)

CISPI 301	(1995) Hubless Cast Iron Soil Pipe and Fittings for Sanitary and Storm Drain, Waste, and Vent Piping Applications
CISPI 310	(1995) Coupling for Use in Connection with Hubless Cast Iron Soil Pipe and Fittings for Sanitary and Storm Drain, Waste, and Vent Piping Applications
CISPI HSN-85	(1985) Neoprene Rubber Gaskets for Hub and Spigot Cast Iron Soil Pipe and Fittings

COPPER DEVELOPMENT ASSOCIATION (CDA)

CDA-02	(1995) Copper Tube Handbook

COUNCIL OF AMERICAN BUILDING OFFICIALS (CABO)

CABO A117.1	(1992; Errata Jun 1993) Accessible and Usable Buildings and Facilities

FOUNDATION FOR CROSS-CONNECTION CONTROL AND HYDRAULIC RESEARCH (FCCHR)

FCCCHR-01	(1993) Manual of Cross-Connection Control

MANUFACTURERS STANDARDIZATION SOCIETY OF THE VALVE AND FITTINGS INDUSTRY (MSS)

MSS SP-25	(1998) Standard Marking System for Valves, Fittings, Flanges and Unions
MSS SP-44	(1996) Steel PipeLine Flanges
MSS SP-58	(1993) Pipe Hangers and Supports - Materials, Design and Manufacture
MSS SP-67	(1995) Butterfly Valves
MSS SP-69	(1996) Pipe Hangers and Supports - Selection and Application

MSS SP-70	(1990) Cast Iron Gate Valves, Flanged and Threaded Ends
MSS SP-71	(1997) Cast Iron Swing Check Valves, Flanges and Threaded Ends
MSS SP-72	(1992) Ball Valves with Flanged or Butt-Welding Ends for General Service
MSS SP-73	(1991; R 1996) Brazing Joints for Copper and Copper Alloy Pressure Fittings
MSS SP-78	(1987; R 1992) Cast Iron Plug Valves, Flanged and Threaded Ends
MSS SP-80	(1997) Bronze Gate, Globe, Angle and Check Valves
MSS SP-83	(1995) Class 3000 Steel Pipe Unions Socket-Welding and Threaded
MSS SP-85	(1994) Cast Iron Globe & Angle Valves, Flanged and Threaded Ends
MSS SP-110	(1996) Ball Valves Threaded, Socket-Welding, Solder Joint, Grooved and Flared Ends

NATIONAL ASSOCIATION OF PLUMBING-HEATING-COOLING CONTRACTORS (NAPHCC)

NAPHCC-01	(1996) National Standard Plumbing Code

NATIONAL FIRE PROTECTION ASSOCIATION (NFPA)

NFPA NFPA 54/ANSI Z223.1	(1996; Errata) National Fuel Gas Code
NFPA 90A	(1996) Installation of Air Conditioning and Ventilating Systems

NSF INTERNATIONAL (NSF)

NSF ANSI/NSF 14	(1996) Plastics Piping Components and Related Materials

PLASTIC PIPE AND FITTINGS ASSOCIATION (PPFA)

PPFA-01	(1991) Plastic Pipe in Fire Resistive Construction

PLUMBING AND DRAINAGE INSTITUTE (PDI)

PDI WH 201	(1992) Water Hammer Arresters

SOCIETY OF AUTOMOTIVE ENGINEERS (SAE)

SAE J 1508	(1996) Hose Clamps

1.2 STANDARD PRODUCTS

Specified materials and equipment shall be standard products of a manufacturer regularly engaged in the manufacture of such products. Specified equipment shall essentially duplicate equipment that has performed satisfactorily at least two years prior to bid opening.

1.3 PERFORMANCE REQUIREMENTS

1.3.1 Welding

[Piping shall be welded in accordance with qualified procedures using performance-qualified welders and welding operators. Procedures and welders shall be qualified in accordance with ASME BPV IX. Welding procedures qualified by others, and welders and welding operators qualified by another employer, may be accepted as permitted by ASME B31.1. The Contracting Officer shall be notified 24 hours in advance of tests, and the tests shall be performed at the work site if practicable. Welders or welding operators shall apply their assigned symbols near each weld they make as a permanent record. Structural members shall be welded in accordance with Section 05055 WELDING, STRUCTURAL.] [Welding and nondestructive testing procedures are specified in Section 05093WELDING PRESSURE PIPING.]

1.3.2 Cathodic Protection and Pipe Joint Bonding

Cathodic protection and pipe joint bonding systems shall be in accordance with [Section 13110 CATHODIC PROTECTION SYSTEM (SACRIFICIAL ANODE)] [and] [Section 13112 CATHODIC PROTECTION SYSTEM (IMPRESSED CURRENT)].

1.4 ELECTRICAL WORK

Motors, motor controllers and motor efficiencies shall conform to the requirements of Section 16415 ELECTRICAL WORK, INTERIOR. Electrical motor-driven equipment specified herein shall be provided complete with motors. Equipment shall be rated at 60 Hz, single phase, ac unless otherwise indicated. Where a motor controller is not provided in a motor-control center on the electrical drawings, a motor controller shall be as indicated. Motor controllers shall be provided complete with properly sized thermal-overload protection in each ungrounded conductor, auxiliary contact, and other equipment, at the specified capacity, and including an allowable service factor.

1.5 SUBMITTALS

Government approval is required for submittals with a "GA" designation; submittals having an "FIO" designation are for information only. The following shall be submitted in accordance with Section 01330 SUBMITTAL PROCEDURES:

SD-01 Data

Welding; FIO

A copy of qualified procedures and a list of names and identification symbols of qualified welders and welding operators.

SD-04 Drawings

Plumbing System; GA1.

Detail drawings consisting of illustrations, schedules, performance charts, instructions, brochures, diagrams, and other information to illustrate the requirements and operations of each system. Detail drawings for the complete plumbing system including piping layouts and locations of connections; dimensions for roughing-in, foundation, and support points; schematic diagrams and wiring diagrams or connection and interconnection diagrams. Detail drawings shall indicate clearances required for maintenance and operation. Where piping and equipment are to be supported other than as indicated, details shall include loadings and proposed support methods. Mechanical drawing plans, elevations, views, and details, shall be drawn to scale.

Electrical Schematics; GA1.

Complete electrical schematic lineless or full line interconnection and connection diagram for each piece of mechanical equipment having more than one automatic or manual electrical control device.

SD-06 Instructions

Plumbing System; FIO.

Diagrams, instructions, and other sheets proposed for posting. Manufacturer's recommendations for the installation of bell and spigot and hubless joints for cast iron soil pipe.

SD-09 Reports

Tests, Flushing and Disinfection ; FI0.

Test reports in booklet form showing all field tests performed to adjust each component and all field tests performed to prove compliance with the specified performance criteria, completion and testing of the installed system. Each test report shall indicate the final position of controls.

Backflow Prevention Assembly Tests; GA1.

Certification of proper operation shall be as accomplished in accordance with state regulations by an individual certified by the state to perform such tests. If no state requirement exists, the Contractor shall have the manufacturer's representative test the device, to ensure the unit is properly installed and performing as intended. The Contractor shall provide written documentation of the tests performed and signed by the individual performing the tests.

SD-13 Certificates

Materials and Equipment; GA1.

Where materials or equipment are specified to comply with requirements of AGA, or ASME, proof of such compliance. The label or listing of the specified agency will be acceptable evidence. In lieu of the label or listing, a written certificate may be submitted from an approved, nationally recognized testing organization equipped to perform such services, stating that the items have been tested and conform to the

requirements and testing methods of the specified agency. Where equipment is specified to conform to requirements of the ASME Boiler and Pressure Vessel Code, the design, fabrication, and installation shall conform to the code.

Bolts; GA1.

Written certification by the bolt manufacturer that the bolts furnished comply with the specified requirements. The certification shall include illustrations of product-required markings, the date of manufacture, and the number of each type of bolt to be furnished based on this certification.

SD-19 Operation and Maintenance Manuals

Plumbing System; GA1

Six copies of the operation manual outlining the step-by-step procedures required for system startup, operation and shutdown. The manual shall include the manufacturer's name, model number, service manual, parts list, and brief description of all equipment and their basic operating features. Sixcopies of the maintenance manual listing routine maintenance procedures, possible breakdowns and repairs. The manual shall include piping and equipment layout and simplified wiring and control diagrams of the system as installed.

1.6 REGULATORY REQUIREMENTS

Plumbing work shall be in accordance with NAPHCC-01.

1.7 PROJECT/SITE CONDITIONS

The Contractor shall become familiar with details of the work, verify dimensions in the field, and advise the Contracting Officer of any discrepancy before performing any work.

PART 2 PRODUCTS

2.1 MATERIALS

Materials for various services shall be in accordance with TABLES I and II. Pipe schedules shall be selected based on service requirements. Pipe fittings shall be compatible with the applicable pipe materials. Plastic pipe, fittings, and solvent cement shall meet NSF ANSI/NSF 14 and shall be NSF listed for the service intended. Plastic pipe, fittings, and solvent cement used for potable hot and cold water service shall bear the NSF seal "NSF-PW." Polypropylene pipe and fittings shall conform to dimensional requirements of Schedule 40, Iron Pipe size. Pipe threads (except dry seal) shall conform to ASME B1.20.1. Grooved pipe couplings and fittings shall be from the same manufacturer. Material or equipment containing lead shall not be used in any potable water system. Hubless cast-iron soil pipe shall not be installed underground, under concrete floor slabs, or in crawl spaces below kitchen floors. Plastic pipe shall not be installed in air plenums. Plastic pipe shall not be installed in a pressure piping system in buildings greater than three stories including any basement levels.

2.1.1 Pipe Joint Materials

Grooved pipe and hubless cast-iron soil pipe shall not be used under ground. Joints and gasket materials shall conform to the following:

a. Coupling for Cast-Iron Pipe: for hub and spigot type ASTM A 74, AWWA C606. For hubless type: CISPI 310

b. Coupling for Steel Pipe: AWWA C606.

c. Couplings for Grooved Pipe: [Ductile Iron ASTM A 536 (Grade 65-45-12)] [Malleable Iron ASTM A 47, Grade 32510]. [Copper ASTM A 536].

d. Flange Gaskets: Gaskets shall be made of non-asbestos material in accordance with ASME B16.21. Gaskets shall be flat, 1/16 inch thick, and contain Aramid fibers bonded with Styrene Butadiene Rubber (SBR) or Nitro Butadiene Rubber (NBR). Gaskets shall be the full face or self centering flat ring type. Gaskets used for hydrocarbon service shall be bonded with NBR.

e. Neoprene Gaskets for Hub and Cast-Iron Pipe and Fittings: CISPI HSN-85.

f. Brazing Material: Brazing material shall conform to AWS A5.8, BCuP-5.

g. Brazing Flux: Flux shall be in paste or liquid form appropriate for use with brazing material. Flux shall be as follows: lead-free; have a 100 percent flushable residue; contain slightly acidic reagents; contain potassium borides; and contain fluorides. Silver brazing materials shall be in accordance with AWS A5.8.

h. Solder Material: Solder metal shall conform to ASTM B 32 95-5 tin-antimony.

i. Solder Flux: Flux shall be liquid form, non-corrosive, and conform to ASTM B 813, Standard Test 1.

j. PTFE Tape: PTFE Tape, for use with Threaded Metal or Plastic Pipe, ASTM D 3308.

k. Rubber Gaskets for Cast-Iron Soil-Pipe and Fittings (hub and spigot type and hubless type): ASTM C 564.

l. Rubber Gaskets for Grooved Pipe: ASTM D 2000, maximum temperature 230 degrees F.

m. Flexible Elastomeric Seals: ASTM D 3139, ASTM D 3212 or ASTM F 477.

n. Bolts and Nuts for Grooved Pipe Couplings: Heat-treated carbon steel, ASTM A 183.

o. Solvent Cement for Transition Joints between ABS and PVC Nonpressure Piping Components: ASTM D 3138.

p. Plastic Solvent Cement for ABS Plastic Pipe: ASTM D 2235.

q. Plastic Solvent Cement for PVC Plastic Pipe: ASTM D 2564 and ASTM D 2855.

r. Plastic Solvent Cement for CPVC Plastic Pipe: ASTM F 493.

s. Flanged fittings including flanges, bolts, nuts, bolt patterns, etc., shall be in accordance with ASME B16.5 class 150 and shall have the manufacturer's trademark affixed in accordance with MSS SP-25. Flange material shall conform to ASTM A 105/A 105M. Blind flange material shall conform to ASTM A 516/A 516M cold service and ASTM A 515/A 515M for hot service. Bolts shall be high strength or intermediate strength with material conforming to ASTM A 193/A 193M.

t. Plastic Solvent Cement for Styrene Rubber Plastic Pipe: ASTM D 3122.

2.1.2 Miscellaneous Materials

Miscellaneous materials shall conform to the following:

a. Water Hammer Arrester: PDI WH 201.

b. Copper, Sheet and Strip for Building Construction: ASTM B 370.

c. Asphalt Roof Cement: ASTM D 2822.

d. Hose Clamps: SAE J 1508.

e. Supports for Off-The-Floor Plumbing Fixtures: ASME A112.6.1M.

f. Metallic Cleanouts: ASME A112.36.2M.

g. Plumbing Fixture Setting Compound: A preformed flexible ring seal molded from hydrocarbon wax material. The seal material shall be nonvolatile nonasphaltic and contain germicide and provide watertight, gastight, odorproof and verminproof properties.

h. Coal-Tar Protective Coatings and Linings for Steel Water Pipelines:

AWWA C203.

i. Hypochlorites: AWWA B300.

j. Liquid Chlorine: AWWA B301.

k. Polyethylene Encasement for Ductile-Iron Piping: AWWA ANSI/AWWA C105/A21.5.

l. Gauges - Pressure and Vacuum Indicating Dial Type - Elastic Element: ASME B40.1.

m. Thermometers: ASTM E 1.

2.1.3 Pipe Insulation Material

Insulation shall be as specified in Section 15080 THERMAL INSULATION FOR MECHANICAL SYSTEMS.

2.2 PIPE HANGERS, INSERTS, AND SUPPORTS

Pipe hangers, inserts, and supports shall conform to MSS SP-58 and MSS SP-69.

2.3 VALVES

Valves shall be provided on supplies to equipment and fixtures. Valves 2-1/2 inches and smaller shall be bronze with threaded bodies for pipe and solder-type connections for tubing. Valves 3 inches and larger shall have flanged iron bodies and bronze trim. Pressure ratings shall be based upon the application. Grooved end valves may be provided if the manufacturer certifies that the valves meet the performance requirements of applicable MSS standard. Valves shall conform to the following standards:

Description	Standard
Butterfly Valves	MSS SP-67
Cast-Iron Gate Valves, Flanged and Threaded Ends	MSS SP-70
Cast-Iron Swing Check Valves, Flanged and Threaded Ends	MSS SP-71
Ball Valves with Flanged Butt-Welding Ends for General Service	MSS SP-72
Ball Valves Threaded, Socket-Welding, Solder Joint, Grooved and Flared Ends	MSS SP-110
Cast-Iron Plug Valves, Flanged and Threaded Ends	MSS SP-78
Bronze Gate, Globe, Angle, and Check Valves	MSS SP-80
Steel Valves, Socket Welding and Threaded Ends	ASME B16.34
Cast-Iron Globe and Angle Valves, Flanged and Threaded Ends	MSS SP-85
Backwater Valves	ASME A112.14.1
Vacuum Relief Valves	ASSE ANSI/ASSE 1001
Water Pressure Reducing Valves	ASSE ANSI/ASSE 1003
Water Heater Drain Valves	ASSE 1005
Trap Seal Primer Valves	ASSE 1018
Temperature and Pressure Relief Valves for Hot Water Supply Systems	ANSI Z21.22
Temperature and Pressure Relief Valves for Automatically Fired Hot Water Boilers	ASME CSD-1 Safety Code No., Part CW, Article 5

2.3.1 Backwater Valves

Backwater valves shall be either separate from the floor drain or a combination floor drain, P-trap, and backwater valve, as shown. Valves shall have cast-iron bodies with cleanouts large enough to permit removal of interior parts. Valves shall be of the flap type, hinged or pivoted,

with revolving disks. Hinge pivots, disks, and seats shall be nonferrous metal. Disks shall be slightly open in a no-flow no-backwater condition. Cleanouts shall extend to finished floor and be fitted with threaded countersunk plugs.

2.3.2 Wall Faucets

Wall faucets with vacuum-breaker backflow preventer shall be brass with 3/4 inch male inlet threads, hexagon shoulder, and 3/4 inch hose connection. Faucet handle shall be securely attached to stem.

2.3.3 Wall Hydrants

Wall hydrants with vacuum-breaker backflow preventer shall have a nickle-brass or nickel-bronze wall plate or flange with nozzle and detachable key handle. A brass or bronze operating rod shall be provided within a galvanized iron casing of sufficient length to extend through the wall so that the valve is inside the building, and the portion of the hydrant between the outlet and valve is self-draining. A brass or bronze valve with coupling and union elbow having metal-to-metal seat shall be provided. Valve rod and seat washer shall be removable through the face of the hydrant. The hydrant shall have 3/4 inch exposed hose thread on spout and 3/4 inch male pipe thread on inlet.

2.3.4 Lawn Faucets

Lawn faucets shall be brass, with either straight or angle bodies, and shall be of the compression type. Body flange shall be provided with internal pipe thread to suit 3/4 inch pipe. Body shall be suitable for wrench grip. Faucet spout shall have 3/4 inchexposed hose threads. Faucet handle shall be securely attached to stem.

2.3.5 Yard Hydrants

Yard box or post hydrants shall have valve housings located below frost lines. Water from the casing shall be drained after valve is shut off. Hydrant shall be bronze with cast-iron box or casing guard. "T" handle key shall be provided.

2.3.6 Relief Valves

Water heaters and hot water storage tanks shall have a combination pressure and temperature (P&T) relief valve. The pressure relief element of a P&T relief valve shall have adequate capacity to prevent excessive pressure buildup in the system when the system is operating at the maximum rate of heat input. The temperature element of a P&T relief valve shall have a relieving capacity which is at least equal to the total input of the heaters when operating at their maximum capacity. Relief valves shall be rated according to ANSI Z21.22. Relief valves for systems where the maximum rate of heat input is less than 200,000 Btuh shall have 3/4 inch minimum inlets, and 3/4 inch outlets. Relief valves for systems where the maximum rate of heat input is greater than 200,000 Btuh shall have 1 inch minimum inlets, and 1 inch outlets. The discharge pipe from the relief valve shall be the size of the valve outlet.

2.3.7 Thermostatic Mixing Valves

Mixing valves, thermostatic type, shall be line size and shall be constructed with rough or finish bodies either with or without plating.

Each valve shall be constructed to control the mixing of hot and cold water and to deliver water at a desired temperature regardless of pressure or input temperature changes. The control element shall be of an approved type. The body shall be of heavy cast bronze, and interior parts shall be brass, bronze, or copper. The valve shall be equipped with necessary stops, check valves, unions, and sediment strainers on the inlets. Mixing valves shall maintain water temperature within 5 degrees F of any setting.

2.4 FIXTURES

Fixtures shall be water conservation type, in accordance with NAPHCC-01. Fixtures for use by the physically handicapped shall be in accordance with CABO A117.1. Vitreous china, nonabsorbent, hard-burned, and vitrified throughout the body shall be provided. Porcelain enameled ware shall have specially selected, clear white, acid-resisting enamel coating evenly applied on surfaces. No fixture will be accepted that shows cracks, crazes, blisters, thin spots, or other flaws. Fixtures shall be equipped with appurtenances such as traps, faucets, stop valves, and drain fittings. Each fixture and piece of equipment requiring connections to the drainage system, except grease interceptors, shall be equipped with a trap. Brass expansion or toggle bolts capped with acorn nuts shall be provided for supports, and polished chromium-plated pipe, valves, and fittings shall be provided where exposed to view. Fixtures with the supply discharge below the rim shall be equipped with backflow preventers. Internal parts of flush and/or flushometer valves, shower mixing valves, shower head face plates, pop-up stoppers of lavatory waste drains, and pop-up stoppers and overflow tees and shoes of bathtub waste drains may contain acetal resin, fluorocarbon, nylon, acrylonitrile-butadiene-styrene (ABS) or other plastic material, if the material has provided satisfactory service under actual commercial or industrial operating conditions for not less than 2 years. Plastic in contact with hot water shall be suitable for 180 degrees F water temperature. Plumbing fixtures shall be as indicated in paragraph PLUMBING FIXTURE SCHEDULE.

2.4.1 Lavatories

Enameled cast-iron lavatories shall be provided with two cast-iron or steel brackets secured to the underside of the apron and drilled for bolting to the wall in a manner similar to the hanger plate. Exposed brackets shall be porcelain enameled. Vitreous china lavatories shall be provided with two integral molded lugs on the back-underside of the fixture and drilled for bolting to the wall in a manner similar to the hanger plate.

2.4.2 Not Used

2.5 BACKFLOW PREVENTERS

Backflow preventers shall be approved and listed by the Foundation For Cross-Connection Control & Hydraulic Research. Reduced pressure principle assemblies, double check valve assemblies, atmospheric (nonpressure) type vacuum breakers, and pressure type vacuum breakers shall be tested, approved, and listed in accordance with FCCCHR-01. Backflow preventers with intermediate atmospheric vent shall conform to ASSE ANSI/ASSE 1012. Reduced pressure principle backflow preventers shall conform to ASSE 1013. Hose connection vacuum breakers shall conform to ASSE ANSI/ASSE 1011. Pipe applied atmospheric type vacuum breakers shall conform to ASSE ANSI/ASSE 1001. Air gaps in plumbing systems shall conform to ASME A112.1.2.

2.6 DRAINS

2.6.1 Floor and Shower Drains

Floor and shower drains shall consist of a galvanized body, integral seepage pan, and adjustable perforated or slotted chromium-plated bronze, nickel-bronze, or nickel-brass strainer, consisting of grate and threaded collar. Floor drains shall be cast iron except where metallic waterproofing membrane is installed. Drains shall be of double drainage pattern for embedding in the floor construction. The seepage pan shall have weep holes or channels for drainage to the drainpipe. The strainer shall be adjustable to floor thickness. A clamping device for attaching flashing or waterproofing membrane to the seepage pan without damaging the flashing or waterproofing membrane shall be provided when required. Drains shall be provided with threaded or caulked connection. In lieu of a caulked joint between the drain outlet and waste pipe, a neoprene rubber gasket conforming to ASTM C 564 may be installed, provided that the drain is specifically designed for the rubber gasket compression type joint. Floor and shower drains shall conform to ASME A112.21.1M.

2.6.1.1 Metallic Shower Pan Drains

Where metallic shower pan membrane is installed, polyethylene drain with corrosion-resistant screws securing the clamping device shall be provided. Polyethylene drains shall have fittings to adapt drain to waste piping. Polyethylene for floor drains shall conform to ASTM D 1248. Drains shall have separate cast-iron "P" trap, circular body, seepage pan, and strainer, unless otherwise indicated.

2.6.1.2 Drains and Backwater Valves

Drains and backwater valves installed in connection with waterproofed floors or shower pans shall be equipped with bolted-type device to securely clamp flashing.

2.6.2 Area Drains

Area drains shall be plain pattern with polished stainless steel perforated or slotted grate and bottom outlet. The drain shall be circular or square with a 12 inch nominal overall width or diameter and 10 inch nominal overall depth. Drains shall be cast iron with manufacturer's standard coating. Grate shall be easily lifted out for cleaning. Outlet shall be suitable for inside caulked connection to drain pipe. Drains shall conform to ASME A112.21.1M.

2.6.3 Hub Drains

HD-1 - Cast iron hub with PVC P-trap.

Hub drains shall extend two inches above finished floor level.

Specified P-traps shall be of same material schedule and type as connected piping system, unless indicated otherwise; see pipe specifications in Section 15060.

2.6.4 Storm Interceptor

Provide where indicated on drawings prefabricated concrete storm interceptor(s). Interceptor(s) shall be constructed as detailed on plans and shall conform to ASTM C-478, and have a minimum inside diameter of 36 inches.

Provide rubber joint gaskets complying with ASTM C-443. Seal all joints inside and outside with non-sag epoxy joint filler.

Where a precast concrete base is not used provide a 6 inch thick poured in place concrete base constructed with 3000 psi concrete, 5 1/2 bag maximum, air entrained to 6%, maximum 4 inch slump with No. 4 rebars at 12 inch centers each way.

Set top of frame and cover flush with finished surfaces and grades.

Provide resilient connector with mechanically compressed ring conforming to ASTM-C-923 at all pipe connections to manhole.

Seal all pipe connections inside and outside with non sag epoxy joint filler.

Where a precast is not provided a structure shall be constructed of 3000 psi minimum concrete, 5 1/2 bag maximum, air entrained to 6%, minimum 4 inch slump, with reinforcing as indicated on drawings.

Where required provide copolymer polypropylene plastic steps conforming to ASTM C-478.

Install steps at 16 inch centers.

2.6.5 Pit Drains

Pit drains shall consist of a body, integral seepage pan, and nontilting perforated or slotted grate. Drains shall be of double drainage pattern suitable for embedding in the floor construction. The seepage pan shall have weep holes or channels for drainage to the drain pipe. Membrane or flashing clamping device shall be provided when required. Drains shall be cast iron with manufacturer's standard coating. Drains shall be circular and provided with bottom outlet suitable for inside caulked connection, unless otherwise indicated. Drains shall be provided with separate cast-iron "P" traps, unless otherwise indicated.

2.6.6 Sight Drains

Sight drains shall consist of body, integral seepage pan, and adjustable strainer with perforated or slotted grate and funnel extension. The strainer shall have a threaded collar to permit adjustment to floor thickness. Drains shall be of double drainage pattern suitable for embedding in the floor construction. A clamping device for attaching flashing or waterproofing membrane to the seepage pan without damaging the flashing or membrane shall be provided for other than concrete construction. Drains shall have a galvanized heavy cast-iron body and seepage pan and chromium-plated bronze, nickel-bronze, or nickel-brass strainer and funnel combination. Drains shall be provided with threaded or caulked connection and with a separate cast-iron "P" trap, unless otherwise indicated. Drains shall be circular, unless otherwise indicated. The funnel shall be securely mounted over an opening in the center of the strainer. Minimum dimensions shall be as follows:

Area of strainer and collar 36 square inches

Height of funnel 3-3/4 inches

Diameter of lower portion of funnel	2 inches
Diameter of upper portion of funnel	4 inches

2.6.7 Roof Drains and Expansion Joints

Roof drains shall conform to ASME A112.21.2M, with dome and integral flange, and shall have a device for making a watertight connection between roofing and flashing. The whole assembly shall be galvanized heavy pattern cast iron. For aggregate surface roofing, the drain shall be provided with a gravel stop. On roofs other than concrete construction, roof drains shall be complete with underdeck clamp, sump receiver, and an extension for the insulation thickness where applicable. A clamping device for attaching flashing or waterproofing membrane to the seepage pan without damaging the flashing or membrane shall be provided when required to suit the building construction. Strainer openings shall have a combined area equal to twice that of the drain outlet. The outlet shall be equipped to make a proper connection to threaded pipe of the same size as the downspout. An expansion joint of proper size to receive the conductor pipe shall be provided. The expansion joint shall consist of a heavy cast-iron housing, brass or bronze sleeve, brass or bronze fastening bolts and nuts, and gaskets or packing. The sleeve shall have a nominal thickness of not less than 0.134 inch. Gaskets and packing shall be close-cell neoprene, O-ring packing shall be close-cell neoprene of 70 durometer. Packing shall be held in place by a packing gland secured with bolts.

2.7 SHOWER PAN

Shower pan may be copper, or nonmetallic material.

2.7.1 Sheet Copper

Sheet copper shall be 16 ounce weight.

2.7.2 Plasticized Polyvinyl Chloride Shower Pan Material

Material shall be sheet form. The material shall be 0.040 inch minimum thickness of plasticized polyvinyl chloride or chlorinated polyethylene and shall be in accordance with ASTM D 4551.

2.7.3 Nonplasticized Polyvinyl Chloride (PVC) Shower Pan Material

Material shall consist of a plastic waterproofing membrane in sheet form. The material shall be 0.040 inch minimum thickness of nonplasticized PVC and shall have the following minimum properties:

a. ASTM D 638, ASTM D 638M:

Ultimate Tensile Strength:	2600 psi
Ultimate Elongation:	398 percent
100 Percent Modulus:	445 psi

b. ASTM D 1004:

Tear Strength:	300 pounds per inch

c. ASTM E 96:

Permeance: 0.008 perms

d. Other Properties:

Specific Gravity: 1.29
PVC Solvent: Weldable
Cold Crack: minus -53 degrees F
Dimensional stability,
212 degrees F minus 2.5 percent
Hardness, Shore A: 89

2.8 TRAPS

Unless otherwise specified, traps shall be plastic per ASTM F 409 or copper-alloy adjustable tube type with slip joint inlet and swivel. Traps shall be without a cleanout. Tubes shall be copper alloy with walls not less than 0.032 inch thick within commercial tolerances, except on the outside of bends where the thickness may be reduced slightly in manufacture by usual commercial methods. Inlets shall have rubber washer and copper alloy nuts for slip joints above the discharge level. Swivel joints shall be below the discharge level and shall be of metal-to-metal or metal-to-plastic type as required for the application. Nuts shall have flats for wrench grip. Outlets shall have internal pipe thread, except that when required for the application, the outlets shall have sockets for solder-joint connections. The depth of the water seal shall be not less than 2 inches. The interior diameter shall be not more than 1/8 inch over or under the nominal size, and interior surfaces shall be reasonably smooth throughout. A copper alloy "P" trap assembly consisting of an adjustable "P" trap and threaded trap wall nipple with cast brass wall flange shall be provided for lavatories. The assembly shall be a standard manufactured unit and may have a rubber-gasketed swivel joint.

2.9 Not Used

2.10 WATER HEATERS

Water heater types and capacities shall be as indicated. Each primary water heater shall have controls with an adjustable range that includes 90 to 130 degrees F. Hot water systems utilizing recirculation systems shall be tied into building off-hour controls. The thermal efficiencies and standby heat losses shall conform to TABLE III for each type of water heater specified. Plastic materials polyetherimide (PEI) and polyethersulfone (PES) are forbidden to be used for vent piping of combustion gases.

2.10.1 Automatic Storage Type

Heaters shall be complete with control system, temperature gauge, and pressure gauge, and shall have ASME rated combination pressure and temperature relief valve.

2.10.1.1 Not Used

2.10.1.2 Gas-Fired Type

Gas-fired water heaters shall conform to ANSI Z21.10.1 when input is

75,000 But per hour or less or ANSI Z21.10.3 for heaters with input greater than 75,000 But per hour.

2.10.1.3 Not Used

2.10.1.4 Not Used

2.10.2 Not Used

2.10.3 Not Used

2.11 Not Used

2.12 Not Used

2.13 Not Used

2.14 Not Used

2.15 DOMESTIC WATER SERVICE METER

Water service meter shall be provided by the City.

PART 3 EXECUTION

3.1 GENERAL INSTALLATION REQUIREMENTS

Piping located in air plenums shall conform to NFPA 90A requirements. Plastic pipe shall not be installed in air plenums. Piping located in shafts that constitute air ducts or that enclose air ducts shall be noncombustible in accordance with NFPA 90A. Installation of plastic pipe where in compliance with NFPA may be installed in accordance with PPFA-01. The plumbing system shall be installed complete with necessary fixtures, fittings, traps, valves, and accessories. Water and drainage piping shall be extended 5 feet outside the building, unless otherwise indicated. A gate valve and drain shall be installed on the water service line inside the building approximately 6 inches above the floor from point of entry. Piping shall be connected to the exterior service lines or capped or plugged if the exterior service is not in place. Sewer and water pipes shall be laid in separate trenches, except when otherwise shown. Exterior underground utilities shall be at least 12 inches below the average local frost depthor as indicated on the drawings. If trenches are closed or the pipes are otherwise covered before being connected to the service lines, the location of the end of each plumbing utility shall be marked with a stake or other acceptable means. Valves shall be installed with control no lower than the valve body.

3.1.1 Water Pipe, Fittings, and Connections

3.1.1.1 Utilities

The piping shall be extended to fixtures, outlets, and equipment. The hot-water and cold-water piping system shall be arranged and installed to

permit draining. The supply line to each item of equipment or fixture, except faucets, flush valves, or other control valves which are supplied with integral stops, shall be equipped with a shutoff valve to enable isolation of the item for repair and maintenance without interfering with operation of other equipment or fixtures. Supply piping to fixtures, faucets, hydrants, shower heads, and flushing devices shall be anchored to prevent movement.

3.1.1.2 Cutting and Repairing

The work shall be carefully laid out in advance, and unnecessary cutting of construction shall be avoided. Damage to building, piping, wiring, or equipment as a result of cutting shall be repaired by mechanics skilled in the trade involved.

3.1.1.3 Protection of Fixtures, Materials, and Equipment

Pipe openings shall be closed with caps or plugs during installation. Fixtures and equipment shall be tightly covered and protected against dirt, water, chemicals, and mechanical injury. Upon completion of the work, the fixtures, materials, and equipment shall be thoroughly cleaned, adjusted, and operated. Safety guards shall be provided for exposed rotating equipment.

3.1.1.4 Mains, Branches, and Runouts

Piping shall be installed as indicated. Pipe shall be accurately cut and worked into place without springing or forcing. Structural portions of the building shall not be weakened. Aboveground piping shall run parallel with the lines of the building, unless otherwise indicated. Branch pipes from service lines may be taken from top, bottom, or side of main, using crossover fittings required by structural or installation conditions. Supply pipes, valves, and fittings shall be kept a sufficient distance from other work and other services to permit not less than 1/2 inch between finished covering on the different services. Bare and insulated water lines shall not bear directly against building structural elements so as to transmit sound to the structure or to prevent flexible movement of the lines. Water pipe shall not be buried in or under floors unless specifically indicated or approved. Changes in pipe sizes shall be made with reducing fittings. Use of bushings will not be permitted except for use in situations in which standard factory fabricated components are furnished to accommodate specific excepted installation practice. Change in direction shall be made with fittings, except that bending of pipe 4 inches and smaller will be permitted, provided a pipe bender is used and wide sweep bends are formed. The center-line radius of bends shall be not less than six diameters of the pipe. Bent pipe showing kinks, wrinkles, flattening, or other malformations will not be acceptable.

3.1.1.5 Pipe Drains

Pipe drains indicated shall consist of 3/4 inch hose bibb with renewable seat and [gate] [full port ball] [ball] valve ahead of hose bibb. At other low points, 3/4 inch brass plugs or caps shall be provided. Disconnection of the supply piping at the fixture is an acceptable drain.

3.1.1.6 Expansion and Contraction of Piping

Allowance shall be made throughout for expansion and contraction of water pipe. Each hot-water and hot-water circulation riser shall have expansion

loops or other provisions such as offsets, changes in direction, etc., where indicated and/or required. Risers shall be securely anchored as required or where indicated to force expansion to loops. Branch connections from risers shall be made with ample swing or offset to avoid undue strain on fittings or short pipe lengths. Horizontal runs of pipe over 50 feet in length shall be anchored to the wall or the supporting construction about midway on the run to force expansion, evenly divided, toward the ends. Sufficient flexibility shall be provided on branch runouts from mains and risers to provide for expansion and contraction of piping. Flexibility shall be provided by installing one or more turns in the line so that piping will spring enough to allow for expansion without straining. If mechanical grooved pipe coupling systems are provided, the deviation from design requirements for expansion and contraction may be allowed pending approval of Contracting Officer.

3.1.1.7 Commercial-Type Water Hammer Arresters

Commercial-type water hammer arresters shall be provided on hot- and cold-water supplies and shall be located as generally indicated, with precise location and sizing to be in accordance with PDI WH 201. Water hammer arresters, where concealed, shall be accessible by means of access doors or removable panels. Commercial-type water hammer arresters shall conform to PDI WH 201. Vertical capped pipe columns will not be permitted.

3.1.2 Not Used

3.1.3 Joints

Installation of pipe and fittings shall be made in accordance with the manufacturer's recommendations. Mitering of joints for elbows and notching of straight runs of pipe for tees will not be permitted. Joints shall be made up with fittings of compatible material and made for the specific purpose intended.

3.1.3.1 Threaded

Threaded joints shall have American Standard taper pipe threads conforming to ASME B1.20.1. Only male pipe threads shall be coated with graphite or with an approved graphite compound, or with an inert filler and oil, or shall have a polytetrafluoroethylene tape applied.

3.1.3.2 Mechanical Couplings

Grooved mechanical joints shall be prepared according to the coupling manufacturer's instructions. Pipe and groove dimensions shall comply with the tolerances specified by the coupling manufacturer. The diameter of grooves made in the field shall be measured using a "go/no-go" gauge, vernier or dial caliper, or narrow-land micrometer. Groove width and dimension of groove from end of the pipe shall be measured and recorded for each change in grooving tool setup to verify compliance with coupling manufacturer's tolerances. Grooved joints shall not be used in concealed locations.

3.1.3.3 Union and Flanged

Unions, flanges and mechanical couplings shall not be concealed in walls, ceilings, or partitions. Unions shall be used on pipe sizes 2-1/2 inches and smaller; flanges shall be used on pipe sizes 3 inches and larger.

3.1.3.4 Cast Iron Soil, Waste and Vent Pipe

Bell and spigot compression and hubless gasketed clamp joints for soil, waste and vent piping shall be installed per the manufacturer's recommendations.

3.1.3.5 Copper Tube and Pipe

The tube or fittings shall not be annealed when making connections. Connections shall be made with a multiflame torch.

a. Brazed. Brazed joints shall be made in conformance with AWS B2.2, MSS SP-73, and CDA-02 with flux and are acceptable for line sizes. Copper to copper joints shall include the use of copper-phosphorus or copper-phosphorus-silver brazing metal without flux. Brazing of dissimilar metals (copper to bronze or brass) shall include the use of flux with either a copper-phosphorus, copper-phosphorus-silver or a silver brazing filler metal.

b. Soldered. Soldered joints shall be made with flux and are only acceptable for lines 2 inches and smaller. Soldered joints shall conform to ASME B31.5 and CDA-02.

c. Copper Tube Extracted Joint. An extracted mechanical joint may be made in copper tube. Joint shall be produced with an appropriate tool by drilling a pilot hole and drawing out the tube surface to form a collar having a minimum height of three times the thickness of the tube wall. To prevent the branch tube from being inserted beyond the depth of the extracted joint, dimpled depth stops shall be provided. Branch tube shall be notched for proper penetration into fitting to ensure a free flow joint. Extracted joints shall be brazed in accordance with NAPHCC-01 using B-Cup series filler metal in accordance with MSS SP-73. Soldered extracted joints will not be permitted.

3.1.3.6 Plastic Pipe

Acrylonitrile-Butadiene-Styrene (ABS) pipe shall have joints made with solvent cement. PVC and CPVC pipe shall have joints made with solvent cement elastomeric, threading, (threading of Schedule 80 Pipe is allowed only where required for disconnection and inspection; threading of Schedule 40 Pipe is not allowed), or mated flanged.

3.1.3.7 Not Used

3.1.3.8 Not Used

3.1.3.9 Other Joint Methods

3.1.4 Dissimilar Pipe Materials

Connections between ferrous and non-ferrous copper pipe shall be made with dielectric unions or flange waterways. Connecting joints between plastic and metallic pipe shall be made with transition fitting for the specific purpose.

3.1.5 Corrosion Protection for Buried Pipe and Fittings

3.1.5.1 Cast Iron and Ductile Iron

Pressure pipe shall have protective coating, a cathodic protection system, and joint bonding. Pipe, fittings, and joints shall have a protective coating. The protective coating shall be completely encasing polyethylene tube or sheet in accordance with AWWA ANSI/AWWA C105/A21.5. Joints and fittings shall be cleaned, coated with primer, and wrapped with tape. The pipe shall be cleaned, coated, and wrapped prior to pipe tightness testing. Joints and fittings shall be cleaned, coated, and wrapped after pipe tightness testing. Tape shall conform to AWWA C203 and shall be applied with a 50 percent overlap. Primer shall be as recommended by the tape manufacturer.

3.1.5.2 Steel

Steel pipe, joints, and fittings shall be cleaned, coated with primer, and wrapped with tape. Pipe shall be cleaned, coated, and wrapped prior to pipe tightness testing. Joints and fittings shall be cleaned, coated, and wrapped after pipe tightness testing. Tape shall conform to AWWA C203 and shall be applied with a 50 percent overlap. Primer shall be as recommended by the tape manufacturer.

3.1.6 Pipe Sleeves and Flashing

Pipe sleeves shall be furnished and set in their proper and permanent location.

3.1.6.1 Sleeve Requirements

Pipes passing through concrete or masonry walls or concrete floors or roofs shall be provided with pipe sleeves fitted into place at the time of construction. Sleeves are not required for cast-iron soil pipe passing through concrete slab on grade, except where penetrating a membrane waterproof floor. A modular mechanical type sealing assembly may be installed in lieu of a waterproofing clamping flange and caulking and sealing of annular space between pipe and sleeve. The seals shall consist of interlocking synthetic rubber links shaped to continuously fill the annular space between the pipe and sleeve with corrosion-protected carbon steel bolts, nuts, and pressure plates. The links shall be loosely assembled with bolts to form a continuous rubber belt around the pipe with a pressure plate under each bolt head and each nut. After the seal assembly is properly positioned in the sleeve, tightening of the bolt shall cause the rubber sealing elements to expand and provide a watertight seal between the pipe and the sleeve. Each seal assembly shall be sized as recommended by the manufacturer to fit the pipe and sleeve involved. Sleeves shall not be installed in structural members, except where indicated or approved. Rectangular and square openings shall be as detailed. Each sleeve shall extend through its respective floor, or roof, and shall be cut flush with each surface, except for special circumstances. Pipe sleeves passing through floors in wet areas such as mechanical equipment rooms, lavatories, kitchens, and other plumbing fixture areas shall extend a minimum of 4 inches above the finished floor. Unless otherwise indicated, sleeves shall be of a size to provide a minimum of 1/4 inch clearance between bare pipe and inside of sleeve or between jacket over insulation and sleeves. Sleeves in bearing walls shall be steel pipe or cast-iron pipe. Sleeves for membrane waterproof floors shall be steel pipe, cast-iron pipe, or plastic pipe. Membrane clamping devices shall be provided on pipe sleeves for waterproof floors. Sleeves in nonbearing walls or ceilings may be steel pipe, cast-iron pipe, galvanized sheet metal

with lock-type longitudinal seam, or moisture-resistant fiber or plastic. Plastic sleeves shall not be used in nonbearing fire walls, roofs, or floor/ceilings. Except as otherwise specified, the annular space between pipe and sleeve, or between jacket over insulation and sleeve, shall be sealed as indicated with sealants conforming to ASTM C 920 and with a primer, backstop material and surface preparation as specified in Section 07900 JOINT SEALING. Pipes passing through sleeves in concrete floors over crawl spaces shall be sealed as specified above. The annular space between pipe and sleeve or between jacket over insulation and sleeve shall not be sealed for interior walls which are not designated as fire rated. Sleeves through below-grade walls in contact with earth shall be recessed 1/2 inch from wall surfaces on both sides. Annular space between pipe and sleeve shall be filled with backing material and sealants in the joint between the pipe and [concrete] [masonry] wall as specified above. Sealant selected for the earth side of the wall shall be compatible with dampproofing/waterproofing materials that are to be applied over the joint sealant.

3.1.6.2 Flashing Requirements

Pipes passing through roof or floor waterproofing membrane shall be installed through a 16 ounce copper flashing, each within an integral skirt or flange. Flashing shall be suitably formed, and the skirt or flange shall extend not less than 8 inches from the pipe and shall be set over the roof or floor membrane in a solid coating of bituminous cement. The flashing shall extend up the pipe a minimum of 10 inches. For cleanouts, the flashing shall be turned down into the hub and caulked after placing the ferrule. Pipes passing through pitched roofs shall be flashed, using lead or copper flashing, with an adjustable integral flange of adequate size to extend not less than 8 inches from the pipe in all directions and lapped into the roofing to provide a watertight seal. The annular space between the flashing and the bare pipe or between the flashing and the metal-jacket-covered insulation shall be sealed as indicated. Flashing for dry vents shall be turned down into the pipe to form a waterproof joint. Pipes, up to and including 10 inches in diameter, passing through roof or floor waterproofing membrane may be installed through a cast-iron sleeve with caulking recess, anchor lugs, flashing-clamp device, and pressure ring with brass bolts. Flashing shield shall be fitted into the sleeve clamping device. Pipes passing through wall waterproofing membrane shall be sleeved as described above. A waterproofing clamping flange shall be installed.

3.1.6.3 Waterproofing

Waterproofing at floor-mounted water closets shall be accomplished by forming a flashing guard from soft-tempered sheet copper. The center of the sheet shall be perforated and turned down approximately 1-1/2 inches to fit between the outside diameter of the drainpipe and the inside diameter of the cast-iron or steel pipe sleeve. The turned-down portion of the flashing guard shall be embedded in sealant to a depth of approximately 1-1/2 inches; then the sealant shall be finished off flush to floor level between the flashing guard and drainpipe. The flashing guard of sheet copper shall extend not less than 8 inches from the drainpipe and shall be lapped between the floor membrane in a solid coating of bituminous cement. If cast-iron water closet floor flanges are used, the space between the pipe sleeve and drainpipe shall be sealed with sealant and the flashing guard shall be upturned approximately 1-1/2 inches to fit the outside diameter of the drainpipe and the inside diameter of the water closet floor flange. The upturned portion of the sheet fitted into the floor flange

shall be sealed.

3.1.6.4 Optional Counterflashing

Instead of turning the flashing down into a dry vent pipe, or caulking and sealing the annular space between the pipe and flashing or metal-jacket-covered insulation and flashing, counterflashing may be accomplished by utilizing the following:

a. A standard roof coupling for threaded pipe up to 6 inches in diameter.

b. A tack-welded or banded-metal rain shield around the pipe.

3.1.6.5 Pipe Penetrations of Slab on Grade Floors

Where pipes, fixture drains, floor drains, cleanouts or similar items penetrate slab on grade floors, except at penetrations of floors with waterproofing membrane as specified in paragraphs Flashing Requirements and Waterproofing, a groove 1/4 to 1/2 inch wide by 1/4 to 3/8 inch deep shall be formed around the pipe, fitting or drain. The groove shall be filled with a sealant as specified in Section 07900 JOINT SEALING.

3.1.7 Fire Seal

Where pipes pass through fire walls, fire-partitions, fire-rated pipe chase walls or floors above grade, a fire seal shall be provided as specified in Section 07840 FIRESTOPPING.

3.1.8 Supports

3.1.8.1 General

Hangers used to support piping 2 inches and larger shall be fabricated to permit adequate adjustment after erection while still supporting the load. Pipe guides and anchors shall be installed to keep pipes in accurate alignment, to direct the expansion movement, and to prevent buckling, swaying, and undue strain. Piping subjected to vertical movement when operating temperatures exceed ambient temperatures shall be supported by variable spring hangers and supports or by constant support hangers. In the support of multiple pipe runs on a common base member, a clip or clamp shall be used where each pipe crosses the base support member. Spacing of the base support members shall not exceed the hanger and support spacing required for an individual pipe in the multiple pipe run. Threaded sections of rods shall not be formed or bent.

3.1.8.2 Not Used

3.1.8.3 Pipe Hangers, Inserts, and Supports

Installation of pipe hangers, inserts and supports shall conform to MSS SP-58 and MSS SP-69, except as modified herein.

a. Types 5, 12, and 26 shall not be used.

b. Type 3 shall not be used on insulated pipe.

c. Type 18 inserts shall be secured to concrete forms before concrete is placed. Continuous inserts which allow more adjustment may be

used if they otherwise meet the requirements for type 18 inserts.

d. Type 19 and 23 C-clamps shall be torqued per MSS SP-69 and shall have both locknuts and retaining devices furnished by the manufacturer. Field-fabricated C-clamp bodies or retaining devices are not acceptable.

e. Type 20 attachments used on angles and channels shall be furnished with an added malleable-iron heel plate or adapter.

f. Type 24 may be used only on trapeze hanger systems or on fabricated frames.

g. Type 39 saddles shall be used on insulated pipe 4 inches and larger when the temperature of the medium is 60 degrees F or higher. Type 39 saddles shall be welded to the pipe.

h. Type 40 shields shall:

(1) Be used on insulated pipe less than 4 inches.

(2) Be used on insulated pipe 4 inches and larger when the temperature of the medium is 60 degrees F or less.

(3) Have a high density insert for pipe 2 inches and larger and for smaller pipe sizes when the insulation is suspected of being visibly compressed, or distorted at or near the shield/insulation interface. High density inserts shall have a density of 8 pcf or greater.

i. Horizontal pipe supports shall be spaced as specified in MSS SP-69 and a support shall be installed not over 1 foot from the pipe fitting joint at each change in direction of the piping. Pipe supports shall be spaced not over 5 feet apart at valves. Operating temperatures in determining hanger spacing for PVC or CPVC pipe shall be 120 degrees F for PVC and 180 degrees F for CPVC. Horizontal pipe runs shall include allowances for expansion and contraction.

j. Vertical pipe shall be supported at each floor, except at slab-on-grade, at intervals of not more than 15 feet nor more than 8 feet from end of risers, and at vent terminations. Vertical pipe risers shall include allowances for expansion and contraction.

k. Type 40 shields used on insulated pipe shall have high density inserts with a density of 8 pcf or greater.

l. Type 35 guides using steel, reinforced polytetrafluoroethylene (PTFE) or graphite slides shall be provided to allow longitudinal pipe movement. Slide materials shall be suitable for the system operating temperatures, atmospheric conditions, and bearing loads encountered. Lateral restraints shall be provided as needed. Where steel slides do not require provisions for lateral restraint the following may be used:

(1) On pipe 4 inches and larger when the temperature of the medium is 60 degrees F or higher, a Type 39 saddle, welded to the pipe, may freely rest on a steel plate.

(2) On pipe less than 4 inches a Type 40 shield, attached to the pipe or insulation, may freely rest on a steel plate.

(3) On pipe 4 inches and larger carrying medium less that 60 degrees F a Type 40 shield, attached to the pipe or insulation, may freely rest on a steel plate.

m. Pipe hangers on horizontal insulated pipe shall be the size of the outside diameter of the insulation. The insulation shall be continuous through the hanger on all pipe sizes and applications.

n. Where there are high system temperatures and welding to piping is not desirable, the type 35 guide shall include a pipe cradle, welded to the guide structure and strapped securely to the pipe. The pipe shall be separated from the slide material by at least 4 inches or by an amount adequate for the insulation, whichever is greater.

o. Hangers and supports for plastic pipe shall not compress, distort, cut or abrade the piping, and shall allow free movement of pipe except where otherwise required in the control of expansion/contraction.

3.1.9 Welded Installation

Plumbing pipe weldments shall be as indicated. Changes in direction of piping shall be made with welding fittings only; mitering or notching pipe to form elbows and tees or other similar type construction will not be permitted. Branch connection may be made with either welding tees or forged branch outlet fittings. Branch outlet fittings shall be forged, flared for improvement of flow where attached to the run, and reinforced against external strains. Beveling, alignment, heat treatment, and inspection of weld shall conform to ASME B31.1. Weld defects shall be removed and repairs made to the weld, or the weld joints shall be entirely removed and rewelded. After filler metal has been removed from its original package, it shall be protected or stored so that its characteristics or welding properties are not affected. Electrodes that have been wetted or that have lost any of their coating shall not be used.

3.1.10 Pipe Cleanouts

Pipe cleanouts shall be the same size as the pipe except that cleanout plugs larger than 4 inches will not be required. A cleanout installed in connection with cast-iron soil pipe shall consist of a long-sweep 1/4 bend or one or two 1/8 bends extended to the place shown. An extra-heavy cast-brass or cast-iron ferrule with countersunk cast-brass head screw plug shall be caulked into the hub of the fitting and shall be flush with the floor. Cleanouts in connection with other pipe, where indicated, shall be T-pattern, 90-degree branch drainage fittings with cast-brass screw plugs, except plastic plugs shall be installed in plastic pipe. Plugs shall be the same size as the pipe up to and including 4 inches. Cleanout tee branches with screw plug shall be installed at the foot of soil and waste stacks, at the foot of interior downspouts, on each connection to building storm drain where interior downspouts are indicated, and on each building drain outside the building. Cleanout tee branches may be omitted on stacks in single story buildings with slab-on-grade construction or where less than 18 inches of crawl space is provided under the floor. Cleanouts on pipe concealed in partitions shall be provided with chromium plated bronze,

nickel bronze, nickel brass or stainless steel flush type access cover plates. Round access covers shall be provided and secured to plugs with securing screw. Square access covers may be provided with matching frames, anchoring lugs and cover screws. Cleanouts in finished walls shall have access covers and frames installed flush with the finished wall. Cleanouts installed in finished floors subject to foot traffic shall be provided with a chrome-plated cast brass, nickel brass, or nickel bronze cover secured to the plug or cover frame and set flush with the finished floor. Heads of fastening screws shall not project above the cover surface. Where cleanouts are provided with adjustable heads, the heads shall be cast iron.

3.2 WATER HEATERS AND HOT WATER STORAGE TANKS

3.2.1 Relief Valves

No valves shall be installed between a relief valve and its water heater or storage tank. The P&T relief valve shall be installed where the valve actuator comes in contact with the hottest water in the heater. Whenever possible, the relief valve shall be installed directly in a tapping in the tank or heater; otherwise, the P&T valve shall be installed in the hot-water outlet piping. A vacuum relief valve shall be provided on the cold water supply line to the hot-water storage tank or water heater and mounted above and within 6 inches above the top of the tank or water heater.

3.2.2 Installation of Gas- Fired Water Heater

Installation shall conform to NFPA NFPA 54/ANSI Z223.1 for gas fired . Storage water heaters that are not equipped with integral heat traps and having vertical pipe risers shall be installed with heat traps directly on both the inlet and outlet. Circulating systems need not have heat traps installed.

3.2.3 Not Used

3.2.4 Heat Traps

Piping to and from each water heater and hot water storage tank shall be routed horizontally and downward a minimum of 2 feet before turning in an upward direction.

3.2.5 Connections to Water Heaters

Connections of metallic pipe to water heaters shall be made with dielectric unions or flanges.

3.3 FIXTURES AND FIXTURE TRIMMINGS

Angle stops, straight stops, stops integral with the faucets, or concealed type of lock-shield, and loose-key pattern stops for supplies with threaded, sweat or solvent weld inlets shall be furnished and installed with fixtures. Where connections between copper tubing and faucets are made by rubber compression fittings, a beading tool shall be used to mechanically deform the tubing above the compression fitting. Exposed traps and supply pipes for fixtures and equipment shall be connected to the rough piping systems at the wall, unless otherwise specified under the item. Floor and wall escutcheons shall be as specified. Drain lines and hot water lines of fixtures for handicapped personnel shall be insulated and do not require polished chrome finish. Plumbing fixtures and

accessories shall be installed within the space shown.

3.3.1 Fixture Connections

Where space limitations prohibit standard fittings in conjunction with the cast-iron floor flange, special short-radius fittings shall be provided. Connections between earthenware fixtures and flanges on soil pipe shall be made gastight and watertight with a closet-setting compound or neoprene gasket and seal. Use of natural rubber gaskets or putty will not be permitted. Fixtures with outlet flanges shall be set the proper distance from floor or wall to make a first-class joint with the closet-setting compound or gasket and fixture used.

3.3.2 Flushometer Valves

Flushometer valves shall be secured to prevent movement by anchoring the long finished top spud connecting tube to wall adjacent to valve with approved metal bracket. Flushometer valves for water closets shall be installed 39 inches above the floor. Bumpers for water closet seats shall be installed on the wall.

3.3.3 Height of Fixture Rims Above Floor

Lavatories shall be mounted with rim 31 inches above finished floor. Wall-hung drinking fountains and water coolers shall be installed with rim 42 inches above floor. Wall-hung service sinks shall be mounted with rim 28 inches above the floor. Installation of fixtures for use by the physically handicapped shall be in accordance with CABO A117.1.

3.3.4 Shower Bath Outfits

The area around the water supply piping to the mixing valves and behind the escutcheon plate shall be made watertight by caulking or gasketing.

3.3.5 Fixture Supports

Fixture supports for off-the-floor lavatories, urinals, water closets, and other fixtures of similar size, design, and use, shall be of the chair-carrier type. The carrier shall provide the necessary means of mounting the fixture, with a foot or feet to anchor the assembly to the floor slab. Adjustability shall be provided to locate the fixture at the desired height and in proper relation to the wall. Support plates, in lieu of chair carrier, shall be fastened to the wall structure only where it is not possible to anchor a floor-mounted chair carrier to the floor slab.

3.3.5.1 Support for Solid Masonry Construction

Chair carrier shall be anchored to the floor slab. Where a floor-anchored chair carrier cannot be used, a suitable wall plate shall be imbedded in the masonry wall.

3.3.5.2 Support for Cellular-Masonry Wall Construction

Chair carrier shall be anchored to floor slab. Where a floor-anchored chair carrier cannot be used, a suitable wall plate shall be fastened to the cellular wall using through bolts and a back-up plate.

3.3.5.3 Support for Steel Stud Frame Partitions

Chair carrier shall be used. The anchor feet and tubular uprights shall be of the heavy duty design; and feet (bases) shall be steel and welded to a square or rectangular steel tube upright. Wall plates, in lieu of floor-anchored chair carriers, shall be used only if adjoining steel partition studs are suitably reinforced to support a wall plate bolted to these studs.

3.3.5.4 Support for Wood Stud Construction

Where floor is a concrete slab, a floor-anchored chair carrier shall be used. Where entire construction is wood, wood crosspieces shall be installed. Fixture hanger plates, supports, brackets, or mounting lugs shall be fastened with not less than No. 10 wood screws, 1/4 inch thick minimum steel hanger, or toggle bolts with nut. The wood crosspieces shall extend the full width of the fixture and shall be securely supported.

3.3.5.5 Wall-Mounted Water Closet Gaskets

Where wall-mounted water closets are provided, reinforced wax, treated felt, or neoprene gaskets shall be provided. The type of gasket furnished shall be as recommended by the chair-carrier manufacturer.

3.3.6 Backflow Prevention Devices

Plumbing fixtures, equipment, and pipe connections shall not cross connect or interconnect between a potable water supply and any source of nonpotable water. Backflow preventers shall be installed where indicated and in accordance with NAPHCC-01 at all other locations necessary to preclude a cross-connect or interconnect between a potable water supply and any nonpotable substance. In addition backflow preventers shall be installed at all locations where the potable water outlet is below the flood level of the equipment, or where the potable water outlet will be located below the level of the nonpotable substance. Backflow preventers shall be located so that no part of the device will be submerged. Backflow preventers shall be of sufficient size to allow unrestricted flow of water to the equipment, and preclude the backflow of any nonpotable substance into the potable water system. Access shall be provided for maintenance and testing. Each device shall be a standard commercial unit.

3.3.7 Access Panels

Access panels shall be provided for concealed valves and controls, or any item requiring inspection or maintenance. Access panels shall be of sufficient size and located so that the concealed items may be serviced, maintained, or replaced. Access panels shall be as specified in Section 05500 MISCELLANEOUS METAL.

3.3.8 Sight Drains

Sight drains shall be installed so that the indirect waste will terminate 2 inches above the flood rim of the funnel to provide an acceptable air gap.

3.3.9 Traps

Each trap shall be placed as near the fixture as possible, and no fixture shall be double-trapped. Traps installed on cast-iron soil pipe shall be cast iron. Traps installed on steel pipe or copper tubing shall be recess-drainage pattern, or brass-tube type. Traps installed on plastic pipe may be plastic conforming to ASTM D 3311. Traps for acid-resisting

waste shall be of the same material as the pipe.

3.3.10 Shower Pans

Before installing shower pan, subfloor shall be free of projections such as nail heads or rough edges of aggregate. Drain shall be a bolt-down, clamping-ring type with weepholes, installed so the lip of the subdrain is flush with subfloor.

3.3.10.1 General

The floor of each individual shower, the shower-area portion of combination shower and drying room, and the entire shower and drying room where the two are not separated by curb or partition, shall be made watertight with a shower pan fabricated in place. The shower pan material shall be cut to size and shape of the area indicated, in one piece to the maximum extent practicable, allowing a minimum of 6 inches for turnup on walls or partitions, and shall be folded over the curb with an approximate return of 1/4 of curb height. The upstands shall be placed behind any wall or partition finish. Subflooring shall be smooth and clean, with nailheads driven flush with surface, and shall be sloped to drain. Shower pans shall be clamped to drains with the drain clamping ring.

3.3.10.2 Metal Shower Pans

When a shower pan of required size cannot be furnished in one piece, metal pieces shall be joined with a flatlock seam and soldered or burned. The corners shall be folded, not cut, and the corner seam shall be soldered or burned. Pans, including upstands, shall be coated on all surfaces with one brush coat of asphalt. Asphalt shall be applied evenly at not less than 1 gallon per 50 square feet. A layer of felt covered with building paper shall be placed between shower pans and wood floors. The joining surfaces of metal pan and drain shall be given a brush coat of asphalt after the pan is connected to the drain.

3.3.10.3 Nonplasticized Chlorinated Polyethylene Shower Pans

Corners of nonplasticized chlorinated polyethylene shower pans shall be folded against the upstand by making a pig-ear fold. Hot-air gun or heat lamp shall be used in making corner folds. Each pig-ear corner fold shall be nailed or stapled 1/2 inch from the upper edge to hold it in place. Nails shall be galvanized large-head roofing nails. On metal framing or studs, approved duct tape shall be used to secure pig-ear fold and membrane. Where no backing is provided between the studs, the membrane slack shall be taken up by pleating and stapling or nailing to studding 1/2 inch from upper edge. To adhere the membrane to vertical surfaces, the back of the membrane and the surface to which it will be applied shall be coated with adhesive that becomes dry to the touch in 5 to 10 minutes, after which the membrane shall be pressed into place. Surfaces to be solvent-welded shall be clean. Surfaces to be joined with xylene shall be initially sprayed and vigorously cleaned with a cotton cloth, followed by final coating of xylene and the joining of the surfaces by roller or equivalent means. If ambient or membrane temperatures are below 40 degrees F the membrane and the joint shall be heated prior to application of xylene. Heat may be applied with hot-air gun or heat lamp, taking precautions not to scorch the membrane. Adequate ventilation and wearing of gloves are required when working with xylene. Membrane shall be pressed into position on the drain body, and shall be cut and fit to match so that membrane can be properly clamped and an effective gasket-type seal

provided. On wood subflooring, two layers of 15 pound dry felt shall be installed prior to installation of shower pan to ensure a smooth surface for installation.

3.3.10.4 Nonplasticized Polyvinyl Chloride (PVC) Shower Pans

Nonplasticized PVC shall be turned up behind walls or wall surfaces a distance of not less than 6 inches in room areas and 3 inches above curb level in curbed spaces with sufficient material to fold over and fasten to outside face of curb. Corners shall be pig-ear type and folded between pan and studs. Only top 1 inch of upstand shall be nailed to hold in place. Nails shall be galvanized large-head roofing type. Approved duct tape shall be used on metal framing or studs to secure pig-ear fold and membrane. Where no backing is provided between studs, the membrane slack shall be taken up by pleating and stapling or nailing to studding at top inch of upstand. To adhere the membrane to vertical surfaces, the back of the membrane and the surface to which it is to be applied shall be coated with adhesive that becomes dry to the touch in 5 to 10 minutes, after which the membrane shall be pressed into place. Trim for drain shall be exactly the size of drain opening. Bolt holes shall be pierced to accommodate bolts with a tight fit. Adhesive shall be used between pan and subdrain. Clamping ring shall be bolted firmly. A small amount of gravel or porous materials shall be placed at weepholes so that holes remain clear when setting bed is poured. Membrane shall be solvent welded with PVC solvent cement. Surfaces to be solvent welded shall be clean (free of grease and grime). Sheets shall be laid on a flat surface with an overlap of about 2 inches. Top edge shall be folded back and surface primed with a PVC primer. PVC cement shall be applied and surfaces immediately placed together, while still wet. Joint shall be lightly rolled with a paint roller, then as the joint sets shall be rolled firmly but not so hard as to distort the material. In long lengths, about 2 or 3 feet at a time shall be welded. On wood subflooring, two layers of 15 pound felt shall be installed prior to installation of shower pan to ensure a smooth surface installation.

3.4 Not Used

3.5 Not Used

3.6 IDENTIFICATION SYSTEMS

3.6.1 Identification Tags

Identification tags made of brass, engraved laminated plastic, or engraved anodized aluminum, indicating service and valve number shall be installed on valves, except those valves installed on supplies at plumbing fixtures. Tags shall be 1-3/8 inch minimum diameter, and marking shall be stamped or engraved. Indentations shall be black, for reading clarity. Tags shall be attached to valves with No. 12 AWG, copper wire, chrome-plated beaded chain, or plastic straps designed for that purpose.

3.6.2 Color Coding

Color coding for piping identification shall be as specified in Section 09900 PAINTING, GENERAL.

3.6.3 Color Coding Scheme for Hidden Utility Components

3.7 ESCUTCHEONS

Escutcheons shall be provided at finished surfaces where bare or insulated piping, exposed to view, passes through floors, walls, or ceilings, except in boiler, utility, or equipment rooms. Escutcheons shall be fastened securely to pipe or pipe covering and shall be satin-finish, corrosion-resisting steel, polished chromium-plated zinc alloy, or polished chromium-plated copper alloy. Escutcheons shall be either one-piece or split-pattern, held in place by internal spring tension or setscrew.

3.8 PAINTING

Painting of pipes, hangers, supports, and other iron work, either in concealed spaces or exposed spaces, is specified in Section 09900 PAINTING, GENERAL.

3.9 TESTS, FLUSHING AND DISINFECTION

3.9.1 Plumbing System

The following tests shall be performed on the plumbing system in accordance with NAPHCC-01.

a. Drainage and Vent Systems Tests.

b. Building Sewers Tests.

c. Water Supply Systems Tests.

3.9.1.1 Test of Backflow Prevention Assemblies

Backflow prevention assembly shall be tested using gauges specifically designed for the testing of backflow prevention assemblies. Gauges shall be tested annually for accuracy in accordance with the University of Southern California's Foundation of Cross Connection Control and Hydraulic Research or the American Water Works Association Manual of Cross Connection (Manual M-14). Report form for each assembly shall include, as a minimum, the following:

Data on Device	Data on Testing Firm
Type of Assembly	Name
Manufacturer	Address
Model Number	Certified Tester
Serial Number	Certified Tester No.
Size	Date of Test
Location	
Test Pressure Readings	Serial Number and Test Data of Gauges

If the unit fails to meet specified requirements, the unit shall be repaired and retested.

3.9.1.2 Shower Pans

After installation of the pan and finished floor, the drain shall be temporarily plugged below the weep holes. The floor area shall be flooded with water to a minimum depth of 1 inch for a period of 24 hours. Any drop in the water level during test, except for evaporation, will be reason for rejection, repair, and retest.

3.9.2 Defective Work

If inspection or test shows defects, such defective work or material shall be replaced or repaired as necessary and inspection and tests shall be repeated. Repairs to piping shall be made with new materials. Caulking of screwed joints or holes will not be acceptable.

3.9.3 System Flushing

Before tests, potable water piping shall be flushed. In general, sufficient water shall be used to produce a minimum water velocity of 2.5 feet per second through piping being flushed. Flushing shall be continued until entrained dirt and other foreign materials have been removed and until discharge water shows no discoloration. System shall be drained at low points. Strainer screens shall be removed, cleaned, and replaced in line. After flushing and cleaning, systems shall be prepared for service by immediately filling water piping with clean, fresh potable water. Any stoppage, discoloration, or other damage to the finish, furnishings, or parts of the building due to the Contractor's failure to properly clean the piping system shall be repaired by the Contractor. When the system flushing is complete, the hot-water system shall be adjusted for uniform circulation. Flushing devices and automatic control systems shall be adjusted for proper operation.

3.9.4 Operational Test

Upon completion of and prior to acceptance of the installation, the Contractor shall subject the plumbing system to operating tests to demonstrate satisfactory functional and operational efficiency. Such operating tests shall cover a period of not less than 8 hours for each system and shall include the following information in a report with conclusion as to the adequacy of the system:

a. Time, date, and duration of test.

b. Water pressures at the most remote and the highest fixtures.

c. Operation of each fixture and fixture trim.

d. Operation of each valve, hydrant, and faucet.

e. Pump suction and discharge pressures.

f. Temperature of each domestic hot-water supply.

g. Operation of each floor and roof drain by flooding with water.

h. Operation of each vacuum breaker and backflow preventer.

i. Complete operation of each water pressure booster system, including pump start pressure and stop pressure.

3.9.5 Disinfection

After operational tests are complete, the entire domestic hot- and cold-water distribution system shall be disinfected. System shall be flushed as specified, before introducing chlorinating material. The chlorinating material shall be hypochlorites or liquid chlorine. Water chlorination procedure shall be in accordance with AWWA M20. The

chlorinating material shall be fed into the water piping system at a constant rate at a concentration of at least 50 parts per million (ppm). A properly adjusted hypochlorite solution injected into the main with a hypochlorinator, or liquid chlorine injected into the main through a solution-feed chlorinator and booster pump, shall be used. The chlorine residual shall be checked at intervals to ensure that the proper level is maintained. Chlorine application shall continue until the entire main is filled. The water shall remain in the system for a minimum of 24 hours. Each valve in the system being disinfected shall be opened and closed several times during the contact period to ensure its proper disinfection. Following the 24-hour period, no less than 25 ppm chlorine residual shall remain in the system. Water tanks shall be disinfected by the addition of chlorine directly to the filling water. Following a 6 hour period, no less than 50 ppm chlorine residual shall remain in the tank. The system including the tanks shall then be flushed with clean water until the residual chlorine is reduced to less than one part per million. During the flushing period each valve and faucet shall be opened and closed several times. From several points in the system the Contracting Officer will take samples of water in proper disinfection containers for bacterial examination. The samples of water shall be tested for total coliform organisms (coliform bacteria, fecal coliform, streptococcal, and other bacteria) in accordance with AWWA-01. The testing method used shall be either the multiple-tube fermentation technique or the membrane-filter technique. The sterilizing shall be repeated until tests indicate the absence of coliform organisms (zero mean coliform density per 100 milliliters) in the samples for at least 2 full days. The system will not be accepted until satisfactory bacteriological results have been obtained.

3.10 PLUMBING FIXTURE SCHEDULE

WC-1 WATER CLOSET:

Pressure assisted siphon-jet, round front, tanksupply , ASME A112.19.2M, floor mounted. Floor flange shall be copper alloy, cast iron, or plastic.

Gasket shall be wax type.

Seat with Cover: Solid white plastic closed front seat with cover. **NOTE: Contractor to furnish an additional 120 toilet seats with covers as spares and deliver them to the Contracting Officer on site.**

Flush Tank - An adequate quantity of water shall be provided to flush and clean the fixture served. The water supply to flush tanks equipped for manual flushing shall be controlled by a float valve or other automatic device designed to refill the tank after each discharge, and to completely shut off the water flow to the tank when the tank is filled to operational capacity. Water closets having their flush valve seat located below the flood level rim of the closet bowl shall have a ballcock installed within a sheath or in a separate and isolated compartment of the tank, both to have visible discharge onto the floor in case of failure. Provision shall be made to automatically supply water to the fixture so as to refill the trap seal after each flushing. Provide device for pressure assisted flush.

Flush Valve in Flush Tank - Flush valve seats in tanks for flushing water closets shall be at least 1 inch above the flood level rim of the bowl connected thereto, except in approved water closet and flush tank combinations designed so that when the tank is flushed and the fixture is clogged or partially clogged, the flush valve shall close tightly so that water will not spill continuously over the rim of the bowl or back flow

from the bowl to the tank.

T/SH-1 BATHTUB:

Straight front, three wall alcove installation, 1524 X 762 X 406 MM,(60 x 30 x 16) in, enameled cast iron, ASME A112.19.1M raised bottom.

Drain Assembly - Plug, cup strainer, overflow assembly, washers, couplings, pop-up lever, trip lever, stopper, fittings, etc., shall be brass, cast copper alloy, or wrought copper alloy. See paragraph FIXTURES for optional plastic accessories.

Shower head: See Shower.

L-1 LAVATORY:

Manufacturer's standard sink depth, vitreous china ASME A112.19.2M, self-rimming countertop, oval 508 x 432 mm (20" x 17")similar to "Chelsea" by Crane.

Faucet - Notwithstanding Section 00700 CONTRACT CLAUSES FAR 52.236-5, Material and Workmanship, the Faucet shall be "Symmetrix S-20 Series with lift rod and pop-up drain assembly" Lavatory Faucet manufactured by Symmons Industries, Inc in order to be fully compatible with and interface with the existing Phase 1 & 2 Lodging facility. No other product will be acceptable. The competition Advocate authorizes sole source procurement.

SK-1 BAR SINK:

Bar Sink, SK-1: Countertop bowl, single compartment, 381 x 381 mm (15" x 15") inches O.D. x 178 MM (7") deep, seamless, 18 gauge Type 302 18-8 stainless steel, self-rimming, 1 3/4 inch radius coved corners, undercoating, 3-hole drilling in ledge back.

Faucet and Spout - Notwithstanding Section 00700 CONTRACT CLAUSES FAR 52.236-5, Material and Workmanship, the Faucet shall be "102mm (4") Deckmount Sink Faucet, Model 27T3-844R3" manufactured by Delta Commercial Faucets in order to be fully compatible with and interface with the existing Phase 1 & 2 Lodging facility. No other product will be acceptable. The competition Advocate authorizes sole source procurement. Faucets have gooseneck spout, standard flow control aerator and 102mm (4") blade handles.

Drain Assembly - Plug, cup strainer, crossbars, jam nuts, washers, couplings, stopper, etc., shall be copper alloy or stainless steel.

SR-1 SERVICE SINK:

Floor sink - White moulded stone, corner, floor mounted 610 X 610 mm (24 inches square), 254 mm (10 inches deep) with stainless steel drain.

Faucet and Spout - Cast or wrought copper alloy, with top or bottom brace, with backflow preventer. Faucets shall have replaceable seat and the washer shall rotate onto the seat. Handles shall be [lever] [four arm] type. Strainers shall have internal threads.

Drain Assembly - Plug, cup strainer, crossbars, jam nuts, washers, couplings, stopper, etc., shall be copper alloy or stainless steel.

Trap - Cast iron, minimum 3 inch diameter.

SH-2 SHOWER:

Bath Showers - Notwithstanding Section 00700 CONTRACT CLAUSES FAR 52.236-5, Material and Workmanship, the Bath Shower Head shall be "Temptrol II Tub and Shower System, Model BP-56-2-X-SS-FG" manufactured by Symmons Industries, Inc. in order to be fully compatible with and interface with the existing Phase 1 & 2 Lodging facility. No other product will be acceptable.

ADA Compliant Bath Showers - Notwithstanding Section 00700 CONTRACT CLAUSES FAR 52.236-5, Material and Workmanship, the ADA Compliant Bath Shower Head shall be "Temptrol II Tub and Shower System, Model BP-56-400-B30-X-V" manufactured by Symmons Industries, Inc. in order to be fully compatible with and interface with the existing Phase 1 & 2 Lodging facility. No other product will be acceptable.

ADA Compliant Wall Shower - Notwithstanding Section 00700 CONTRACT CLAUSES FAR 52.236-5, Material and Workmanship, the ADA Compliant Shower Head shall be "Temptrol II Shower System, Model BP-56-300-B30-X-V" manufactured by Symmons Industries, Inc. in order to be fully compatible with and interface with the existing Phase 1 & 2 Lodging facility. No other product will be acceptable.

P-18 ICE MACHINE:

Vending Area - Standup:
Stainless steel exterior, 3/4 Hp compressor, 115V, 60Hz, 1 phase, capable of producing 380 lbs. of duce size ice cubes, built-in agitator, polyethylene bin liner and insulation. Cup dispenser type.

Automatic ice machine cleaner used to remove and control build-up of lime scale and sanitize to control algae and other air borne bacteria.

Water filter with replacable filter, NSF listed components with filter life indicator.

Acceptable Manufacturers: Manitowoc Ice, Inc., Model QBO452A or approved equal.

3.11 POSTED INSTRUCTIONS

Framed instructions under glass or in laminated plastic, including wiring and control diagrams showing the complete layout of the entire system, shall be posted where directed. Condensed operating instructions explaining preventive maintenance procedures, methods of checking the system for normal safe operation, and procedures for safely starting and stopping the system shall be prepared in typed form, framed as specified above for the wiring and control diagrams and posted beside the diagrams. The framed instructions shall be posted before acceptance testing of the systems.

3.12 PERFORMANCE OF WATER HEATING EQUIPMENT

Standard rating condition terms are as follows:

EF = Energy factor, overall efficiency.

ET = Thermal efficiency with 70 degrees F delta T.

EC = Combustion efficiency, 100 percent - flue loss when smoke = o (trace is permitted).

SL = Standby loss in W/sq. ft. based on 80 degrees F delta T, or in percent per hour based on nominal 90 degrees F delta T.

HL = Heat loss of tank surface area.

V = Storage volume in liters

3.12.1 Storage Water Heaters

3.12.1.1 Not Used
3.12.1.2 Gas

a. Storage capacity of more than 100 gallons - or input rating more than 75,000 Btu/h: Et shall be 77 percent; maximum SL shall be 1.3+38/V, per ANSI Z21.10.3.

3.12.1.3 Not Used

3.12.2 Not Used

3.12.3 [Enter Appropriate Subpart Title Here]3.12.3.1 [Enter Appropriate Subpart Title Here]

3.12.3.2 Not Used

3.12.4 Not Used

3.13 TABLES

TABLE I
PIPE AND FITTING MATERIALS FOR
DRAINAGE, WASTE, AND VENT PIPING SYSTEMS

		SERVICE					
Item #	Pipe and Fitting Materials	A	B	C	D	E	F
1	Cast iron soil pipe and fittings, hub and spigot, ASTM A 74 with compression gaskets	X	X	X	X	X	
2	Cast iron soil pipe and fittings hubless, CISPI 301 and ASTM A 888		X	X	X		
3	Cast iron drainage fittings, threaded, ASME B16.12 for use with Item 10	X		X	X		
4	Cast iron screwed fittings (threaded) ASME B16.4 for use with Item 10				X	X	
5	Grooved pipe couplings, ferrous and non-ferrous pipe ASTM A 536 and ASTM A 47, ASTM A 47M	X	X		X	X	
6	Ductile iron grooved joint fittings for ferrous pipe ASTM A 536 and ASTM A 47, ASTM A 47M for use with Item 5	X	X		X	X	
7	Bronze sand casting grooved joint pressure fittings for non-ferrous pipe ASTM B 584, for use with Item 5	X	X		X	X	
8	Wrought copper grooved joint pressure pressure fittings for non-ferrous pipe ASTM B 75 C12200, ASTM B 152, ASTM B 152M, C11000, ASME B16.22 ASME B16.22 for use with Item 5	X	X				
9	Malleable-iron threaded fittings, galvanized ASME B16.3 for use with Item 10				X	X	
10	Steel pipe, seamless galvanized, ASTM A 53, Type S, Grade B	X			X	X	
11	Seamless red brass pipe, ASTM B 43		X	X			
12	Bronzed flanged fittings, ASME B16.24 for use with Items 11 and 14				X	X	

TABLE I
PIPE AND FITTING MATERIALS FOR
DRAINAGE, WASTE, AND VENT PIPING SYSTEMS

		SERVICE					
Item #	Pipe and Fitting Materials	A	B	C	D	E	F
13	Cast copper alloy solder joint pressure fittings, ASME B16.18 for use with Item 14				X	X	
14	Seamless copper pipe, ASTM B 42				X		
15	Cast bronze threaded fittings, ASME B16.15				X	X	
16	Copper drainage tube, (DWV), ASTM B 306	X*	X	X*	X	X	
17	Wrought copper and wrought alloy solder-joint drainage fittings. ASME B16.29	X	X	X	X	X	
18	Cast copper alloy solder joint drainage fittings, DWV, ASME B16.23	X	X	X	X	X	
19	Acrylonitrile-Butadiene-Styrene (ABS) plastic drain, waste, and vent pipe and fittings ASTM D 2661, ASTM F 628	X	X	X	X	X	X
20	Polyvinyl Chloride plastic drain, waste and vent pipe and fittings, ASTM D 2665, ASTM F 891, (Sch 40) ASTM F 1760	X	X	X	X	X	X
22	High-silicon content cast iron pipe and fittings (hub and spigot, and mechanical joint), ASTM A 518, ASTM A 518M		X			X	
23	Polypropylene (PP) waste pipe and fittings, ASTM D 4101						X

SERVICE:

A - Underground Building Soil, Waste and Storm Drain
B - Aboveground Soil, Waste, Drain In Buildings
C - Underground Vent
D - Aboveground Vent
E - Interior Rainwater Conductors Aboveground
F - Corrosive Waste And Vent Above And Belowground
* - Hard Temper

TABLE I
PIPE AND FITTING MATERIALS FOR
DRAINAGE, WASTE, AND VENT PIPING SYSTEMS

		SERVICE					
Item #	Pipe and Fitting Materials	A	B	C	D	E	F

TABLE II
PIPE AND FITTING MATERIALS FOR PRESSURE PIPING SYSTEMS

		SERVICE			
Item No.	Pipe and Fitting Materials	A	B	C	D
1	Malleable-iron threaded fittings, a. Galvanized, ASME B16.3 for use with Item 4a	X	X	X	X
	b. Same as "a" but not galvanized for use with Item 4b			X	
2	Grooved pipe couplings, ferrous pipe ASTM A 536 and ASTM A 47, ASTM A 47M, non-ferrous pipe, ASTM A 536 and ASTM A 47, ASTM A 47M	X	X	X	
3	Ductile iron grooved joint fittings for ferrous pipe ASTM A 536 and ASTM A 47, ASTM A 47M for use with Item 2	X	X	X	
4	Steel pipe: a. Seamless, galvanized, ASTM A 53, Type S, Grade B	X	X	X	X
	b. Seamless, black, ASTM A 53, Type S, Grade B			X	
5	Seamless red brass pipe, ASTM B 43	X	X		X
6	Bronze flanged fittings, ASME B16.24 for use with Items 5 and 7	X	X		X
7	Seamless copper pipe, ASTM B 42	X	X		X
8	Seamless copper water tube, ASTM B 88, ASTM B 88M	X**	X**	X**	X***
9	Seamless and welded copper distribution tube (Type D) ASTM B 641	X**	X**	X**	X****
10	Cast bronze threaded fittings, ASME B16.15 for use with Items 5 and 7	X	X		X
11	Wrought copper and bronze solder-joint pressure fittings, ASME B16.22 for use with Items 5 and 7	X	X	X	X

TABLE II
PIPE AND FITTING MATERIALS FOR PRESSURE PIPING SYSTEMS

		SERVICE			
Item No.	Pipe and Fitting Materials	A	B	C	D
12	Cast copper alloy solder-joint pressure fittings, ASME B16.18 for use with Items 8 and 9	X	X	X	X
13	Bronze and sand castings grooved joint pressure fittings for non-ferrous pipe ASTM B 584, for use with Item 2	X	X	X	
14	Polyethylene (PE) plastic pipe, Schedules 40 and 80, based on outside diameter ASTM D 2447	X			X
15	Polyethylene (PE) plastic pipe (SDR-PR), based on controlled outside diameter, ASTM D 3035	X			X
16	Polyethylene (PE) plastic pipe (SIDR-PR), based on controlled inside diameter, ASTM D 2239	X			X
17	Butt fusion polyethylene (PE) plastic pipe fittings, ASTM D 3261 for use with Items 14, 15, and 16	X			X
18	Socket-type polyethylene fittings for outside diameter-controlled polyethylene pipe, ASTM D 2683 for use with Item 15	X			X
19	Polyethylene (PE) plastic tubing, ASTM D 2737	X			X
20	Chlorinated polyvinyl chloride (CPVC) plastic hot and cold water distribution system, ASTM D 2846	X	X		X
21	Chlorinated polyvinyl chloride (CPVC) plastic pipe, Schedule 40 and 80, ASTM F 441	X			X
22	Chlorinated polyvinyl chloride (CPVC) plastic pipe (SDR-PR) ASTM F 442	X			X

TABLE II
PIPE AND FITTING MATERIALS FOR PRESSURE PIPING SYSTEMS

		SERVICE			
Item No.	Pipe and Fitting Materials	A	B	C	D
23	Threaded chlorinated polyvinyl chloride (chloride CPVC) plastic pipe fittings, Schedule 80, ASTM F 437, for use with Items 20, and 21	X	X		X
24	Socket-type chlorinated polyvinyl chloride (CPVC) plastic pipe fittings, Schedule 40, ASTM F 438 for use with Items 20, 21, and 22	X	X		X
25	Socket-type chlorinated polyvinyl chloride (CPVC) plastic pipe fittings Schedule 80, ASTM F 439 for use with Items 20, 21, and 22	X	X		X
26	Polyvinyl chloride (PVC) plastic pipe, Schedules 40, 80, and 120, ASTM D 1785	X			X
27	Polyvinyl chloride (PVC) pressure-rated pipe (SDR Series), ASTM D 2241	X			X
28	Polyvinyl chloride (PVC) plastic pipe fittings, Schedule 40, ASTM D 2466	X			X
29	Socket-type polyvinyl chloride (PVC) plastic pipe fittings, schedule 80, ASTM D 2467 for use with Items 26 and 27	X			X
30	Threaded polyvinyl chloride (PVC) plastic pipe fittings, schedule 80, ASTM D 2464	X			X
31	Joints for IPS pvs pipe using solvent cement, ASTM D 2672	X			X
32	Filament-wound reinforced thermosetting resin (RTRP) pipe, ASTM D 2996	X	X		
33	Steel pipeline flanges, MSS SP-44	X	X		
34	Fittings: brass or bronze; ASME B16.15, and ASME B16.18	X	X		

TABLE II
PIPE AND FITTING MATERIALS FOR PRESSURE PIPING SYSTEMS

		SERVICE			
Item No.	Pipe and Fitting Materials	A	B	C	D
	ASTM B 828				
35	Carbon steel pipe unions, socket-welding and threaded, MSS SP-83	X	X	X	
36	Malleable-iron threaded pipe unions ASME B16.39	X	X		
37	Nipples, pipe threaded ASTM A 733	X	X	X	

A - Cold Water Aboveground
B - Hot Water 180 degrees F Maximum Aboveground
C - Compressed Air Lubricated
D - Cold Water Service Belowground
Indicated types are minimum wall thicknesses.
** - Type L - Hard
*** - Type K - Hard temper with brazed joints only or type K-soft temper without joints in or under floors
**** - In or under slab floors only brazed joints

TABLE III
STANDARD RATING CONDITIONS AND MINIMUM PERFORMANCE RATINGS FOR WATER HEATING EQUIPMENT

A. STORAGE WATER HEATERS

FUEL	STORAGE CAPACITY GALLONS	INPUT RATING	TEST PROCEDURE	REQUIRED PERFORMANCE
Gas	See Drawing Schedule.	100 min. OR 75,000 Btu/h	ANSI Z21.10.3	ET = 83 percent; SL = 1.3+38/V max.

C. Instantaneous Water Heater

Gas	All	All	ANSI Z21.10.3	ET = 83 percent

TERMS:

EF = Energy factor, overall efficiency.
ET = Thermal efficiency with 70 degrees F delta T.
EC = Combustion efficiency, 100 percent - flue loss when smoke = 0 (trace is permitted).
SL = Standby loss in W/sq. ft. based on 80 degrees F delta T, or in percent per hour based on nominal 90 degrees F delta T.
HL = Heat loss of tank surface area
V = Storage volume in gallons

Inspect millwork shop drawings; confirm location and size of fixtures and openings before rough-in and installation.

Inspect roughed-in domestic water and waste piping systems to verify actual piping connection locations prior to fixture installation. Inspect floors, bases and conditions under which fixture work will be accomplished and notify appropriate parties in writing of all unsatisfactory conditions.

Install all plumbing fixtures plumb and true to wall lines. All fixture heights, spacing, and distances from walls shall be in accordance with architectural floor plans, elevations and details.

All plumbing fixtures specified herein or indicated on Drawings as HANDICAPPED shall be located and mounted at heights and locations in compliance with Public Law 90-480 and State of Wisconsin Accessibility Standards. Provide pre-molded waste pipe insulation on lavatory discharge piping and pipe insulation on exposed hot water piping to lavatories. Orient flush valve handle towards open side of stall for water closets.

Securely install each plumbing fixture to wall or floor in accordance with manufacturer's written instructions. Caulk all floor mounted fixtures water-tight between fixture and floor and/or wall.

Coordinate fixture installation with other work, including water and drain piping.

All exposed supply piping, trim and valves for plumbing fixtures in finished rooms shall be chrome plated. This includes rigid and flexible supplies to lavatories, sinks, tank type, water closets and urinals, flush valves, stops, traps and tail pieces.

Provide chrome plated escutcheon plates on all pipes passing through finished floors, walls and ceilings, with outside diameter sized to cover sleeve opening and inside diameter to fit snugly around pipe. Set tight to building surface.

Install vacuum breakers on all plumbing fixtures, faucets and valves which have a submerged inlet or hose threads. Vacuum breakers can be integral with fixture or mounted 90 inches above floor in domestic water line serving required fixture(s). Use only breakers which are approved by local and state health authorities.

Install all fixtures to permit easy removal of traps for cleaning and servicing, and to permit access to valves, pipes and other equipment. Any relocation of fixtures required to provide proper access shall be accomplished at no additional cost to Owner.

At completion of plumbing fixture installations:

Thoroughly clean each plumbing fixture with approved cleaning solvents and solutions.

Test operate each plumbing fixture to demonstrate compliance with specifications.

Adjust each flow regulating valve or device to provide sufficient flow rates and pressure at outlets.

If required by local code test shower receptor by filling with water to the level of the rough-in threshold. Test upper and underside of subpan to a point where it is clamped to the drain.

Assure floor where handicap accessible shower is to be installed is recessed in order for a maximum curb height of 1/2" or less above finished floor can be maintained. -- End of Section --

SECTION TABLE OF CONTENTS

DIVISION 15 - MECHANICAL

SECTION 15450

PLUMBING EQUIPMENT

mm/yy

PART 1 GENERAL

1.1 DESCRIPTION
1.2 QUALITY ASSURANCE
1.3 SUBMITTALS
1.4 PRODUCT DELIVER, STORAGE AND HANDLING
1.5 ENVIRONMENTAL CONDITIONS

PART 2 PRODUCTS

2.1 MATERIALS

PART 3 EXECUTION

3.1 INSPECTION
3.2 INSTALLATION

-- End of Section Table of Contents --

SECTION 15450

PLUMBING EQUIPMENT
mm/yy

PART 1 GENERAL

1.1 DESCRIPTION

All equipment shall be set plumb and true to wall lines and securely held in place.

Each domestic water connection to a piece of plumbing equipment which has a submerged inlet or a hose shall be provided with a vacuum breaker approved by local and State health authorities.

All equipment heights, spacing and distances from walls shall be in accordance with architectural details (floor plans and elevations). Any deviation from same shall necessitate alteration to suit the Engineer's plans.

No warped or otherwise imperfect or malfunctioning plumbing equipment will be accepted.

1.2 QUALITY ASSURANCE

Use adequate numbers of skilled workmen who are thoroughly trained and experienced in the necessary crafts and who are completely familiar with the specified requirements and the methods needed for proper installation of the work of this Section.

Comply with all applicable local, state and federal codes and conform to the latest standards of the organization listed below:

American Society of Mechanical Engineers (ASME)
ASME Code Symbol Stamps: Stamp vessels and valves with appropriate code symbols.
Provide appropriate Certificates of Shop Inspection and Data Report specified in ASME Code.
American Gas Association (AGA)
National Sanitation Foundation (NSF)
National Fire Protection Association (NFPA)
Underwriter's Laboratories (UL)
American Society of Testing and Materials (ASTM)

1.3 SUBMITTALS

SD-01 Data

Manufacturers shop drawings; GA-1.

Refer to Section 01330 for submittal requirements.

Submit detailed shop drawings for each plumbing equipment including:

Catalog cuts, specifications, installation instructions, and dimensioned drawings.

Schedule showing manufacturer's model number, size, location, rated capacities, and features.

Inspection certificates for pressure vessels from authorities having jurisdiction.

1.4 PRODUCT DELIVER, STORAGE AND HANDLING

Delivery:

The Contractor shall be responsible for scheduling delivery of all materials/equipment so as not to interfere with project operations.

Storage:

The Contractor shall be responsible for unloading and storing all materials/equipment in designated material storage areas.
The Contractor shall store materials/equipment in a orderly and safe fashion so as not to interfere with other trades or create an unsafe condition.
The Contractor shall provide all means necessary to protect all materials/equipment from damage, and to prevent dirt and debris from accumulating inside material/equipment prior to installation.

Handling:

The Contractor shall protect his work and materials/equipment, and the work and materials/equipment of other trades,during and after installation.
The Contractor shall promptly remove all damaged or unsuitable materials/equipment from the job site and replace with new specified materials/equipment at no additional cost to Contract.

1.5 ENVIRONMENTAL CONDITIONS

The Contractor shall install all materials/equipment within the ambient temperatures and humidity guidelines of the manufacturer and/or as specified herein.

PART 2 PRODUCTS

2.1 MATERIALS

Gas-Fired Water Heaters: WH-2

Commercial Type: Furnish and install a nickelshield power gas water heater.

Performance: See schedule on Drawing P7.1.

The power burner shall consist of a cast aluminum housing designed so that all components are outside of the combustion chamber for a long life and ease of maintenance. It shall fire with a compact, swirling flame to burn efficiently and release maximum BTU per volume of gas. A multivane blower shall be included to supply the precise air/fuel mixture for optimum combustion. The power burner shall be listed by underwriters laboratories as a component separate from the water heater.

The water heater shall have a minimum combustion efficiency of 83% and a

standby heat loss not to exceed 2.3 + (67/V) as a percent of total BTU stored. This exceeds the requirements of ASHRAE 90 standards. Start up shall be performed by a factory authorized craftsman and start up performance data shall be supplied to the Owner.

The multi-flue tank shall be constructed in accordance with ASME code and stamped with appropriate symbol for 125 psi working pressure. The tubes shall be covered with pure, dead soft copper, expanded, beaded and welded into the tube sheet.

After all welding is completed, the tank shall be completely lined with electroless nickel, forming a nonferrous, corrosion-resistant protective barrier. Magnesium rods will not be installed and glass line (porcelain enamel) tanks will not be accepted as an equal.

The water heater shall be insulated with heavy density fiberglass insulation and trimmed with a baked enamel steel segmented jacket of field replaceable panels.

There shall be a minimum of two operating thermostats. These operating controls should be set at 120 F for the lower and 130 F for the upper with a maximum circulating water temperature in the plumbing system not to exceed 130 F. There shall be one temperature limiting device designed to prevent temperatures from exceeding a maximum of 200 F. An ASME temperature and pressure relief valve, temperature limiting device, redundant high pressure protective device and a drain valve shall be factory installed. There shall also be installed, in the cold section of the tank as factory installed equipment, a thermal expansion control valve set to relieve pressures exceeding 100 psi.

The controls shall be as follows:

A solid state primary safeguard control providing prepurging of combustion chamber and 2-4 second shutdown in the event of flame failure. Gas train shall include (2) main manual gas shutoff valves, pilot manual gas shutoff valve and separate main gas pressure regulator, pilot gas pressure regulator, main automatic gas valve and pilot automatic gas valve.

The complete water heater shall be listed by underwriters laboratories and have the underwriters laboratories label attached.

The nickelshield power gas water heater shall be covered under the manufacturer's ten year warranty, service policy. In the first year, the manufacturer will pay for all material, labor and freight covering any part of parts of the water heater that should fail or not meet the Owner's satisfaction. During the last five years if the tank products rusty water or leaks, the manufacturer will repair the tank so that it does not leak or product rusty water and all repair costs will be totaled and shared between the manufacturer and the Owner. If in the judgement of the manufacturer the tank is not repairable, the manufacturer will offer to sell to the Owner a new tank of the then current equivalent model. With either repair or replacement, the cost to the Owner will be equal to the number of months in service, divided by the total number of months of the warranty, times the cost of repair or the current list price of the replacement tank. The tank package warranty must be supplied with submittals. Less than the above described warranty will not be accepted.

The water heater shall include all standard equipment as shown on manufacturer's specification sheet, shall fit properly into the space

provided for it and shall conform to the drawing requirements. The complete installation shall be in accordance with all applicable state and local codes and installation drawings.

Furnish and install venting material as shown on Drawing P6.5, Detail 1, and in accordance with manufacturers instructions.

Acceptable Manufacturers: PV1 Industries, Inc.: 2500P900A-TP or approved equal.

Hydropneumatic Tanks: ET-2

Tank: 125# ASME constructed, horizontal steel tank rated for 125 psi working pressure, with NSF listed FDA approved rigid polypropylene liner, diaphragm, and corrosion resistant tank finish.

Diaphragm: FDA approved, heavy duty butyl rubber diaphragm, permanently bonded to liner and tank steel shell with 360 clamping rings. Tank pre-pressurized with air cushion at factory.

Accessories: Provide isolation valve and drain valve, air fill valve, pressure gage, bottom and side system connections, support ring or saddles.

Tank Characteristics: See expansion tank (ET) schedule on Drawing P7.2.

PART 3 EXECUTION

3.1 INSPECTION

The Contractor shall examine the areas and conditions under which the work of this Section will be installed, and shall correct conditions detrimental to the timely and proper completion of the work, or bring them to the attention of the Project Supervising Representative for correction. Do not proceed until unsatisfactory conditions have been corrected.

The Contractor shall verify the location of all existing services prior to all new installations. Any damages to existing services caused by the Contractor shall be repaired at the expense of the Contractor.

The Contractor shall schedule new connections to and extensions from the existing utilities as indicated on the contract drawings, so existing facility operations are not interrupted.

3.2 INSTALLATION

Delivery Storage and Handling:

Store equipment in clean, dry place. Protect from weather, dirt, fumes, water, construction debris and physical damage.

Handle equipment to prevent external and internal component damage, breakage, denting and scoring finish.

Do not install damaged equipment. Either replace damaged components or return entire unit to manufacturer for replacement.

Hose Reels and Stations:

Install hose reels and stations per manufacturer's recommendations and

as indicated in this specification section and on drawings.
Locate where indicated on drawings. [Coordinate location with equipment contractor].

Hydropneumatic Tanks: ET-2

Install tanks per manufacturer's recommendations and as detailed on drawings.
Locate where indicated on drawings.
Flush and clean tank prior to putting into operation. Adjust pump cut-in and cut-out pressures, and tank pressure as required for proper operating system.

Water Heaters:
Install water heaters where indicated on drawings, in accordance with manufacturer's installation instructions, and in compliance with state and local codes and specified NFPA and ASME Boiler and Pressure Vessel Code standards.
Set units level and plumb on concrete pads, and orient so controls and devices needing service and maintenance have adequate access.
Connect hot and cold water piping to units with shutoff valves and unions. Where indicated connect recirculating water line to unit with shutoff valve, check valve and union.
Gas-Fired Unit: Connect gas line to unit with drip leg, tee, gas cock, and union full size of unit's inlet gas connection. Connect flue to draft hood with gas-tight connection.

Flush water heaters upon completion of installation in accordance with manufacturer's recommendations.
Start-up water heaters upon completion of installation in accordance with manufacturer's written procedures and demonstrate compliance with specifications.
Provide hydrostatic type testing on assembled heaters in accordance with specified sections of ASME Boiler and Pressure Vessel Code.

-- End of Section --

SECTION TABLE OF CONTENTS

DIVISION 15 - MECHANICAL

SECTION 15455

PLUMBING PUMPS

mm/yy

PART 1 GENERAL

1.1 DESCRIPTION
1.2 QUALITY ASSURANCE
1.3 SUBMITTALS
1.4 PRODUCT DELIVERY, STORAGE AND HANDLING
1.5 GUARANTEE

PART 2 PRODUCTS

2.1 MATERIALS

PART 3 EXECUTION

3.1 INSPECTION
3.2 INSTALLATION
3.3 FIELD QUALITY CONTROL

-- End of Section Table of Contents --

SECTION 15455

PLUMBING PUMPS
mm/yy

PART 1 GENERAL

1.1 DESCRIPTION

Pump capacities shall be as listed on the pump schedule on the drawings. Pump shall deliver required GPM against design head within ±3% without overheating bearings, seals, or motor.

Pumps shall have statically and dynamically balanced rotating parts.
Complete servicing without breaking piping or motor connections.
Pumps operate at 1750 RPM unless specified or scheduled otherwise.

1.2 QUALITY ASSURANCE

Use adequate numbers of skilled workmen who are thoroughly trained and experienced in the necessary crafts and who are completely familiar with the specified requirements and the methods needed for proper installation of the work of this Section.

Comply with all applicable local, state and federal codes and conform to the most demanding requirements of the latest standards of the organizations listed below:
American Society of Heating, Refrigerating and Air Conditioning Engineers (ASHRAE).
Hydraulic Institute Standards (HI)
National Electrical Manufacturers Association (NEMA)

1.3 SUBMITTALS
SD-01 Data

Manufacturers shop drawings; GA-1.

Refer to Section 01330 for submittal requirements.

Product Data:
Submit certified pump curves showing pump performance characteristics with pump and system operating point plotted.
Include NPSH curve when specified.

Submit 2 copies of start-up report to Architect/Engineer.

1.4 PRODUCT DELIVERY, STORAGE AND HANDLING

Delivery:

The Contractor shall be responsible for scheduling delivery of all his materials/equipment so as not to interfere with project operations.

Storage:

The Contractor shall be responsible for unloading and storing all his materials/equipment in designated material storage areas.

The Contractor shall store his materials/equipment in a orderly and safe fashion so as not to interfere with other trades or create an unsafe condition.

The Contractor shall provide all means necessary to protect all his materials/equipment from damage, and to prevent dirt and debris from accumulating inside material/equipment prior to installation.

Handling:

The Contractor shall protect his work and materials/equipment, and the work and materials/equipment of other trades,during and after installation.

The Contractor shall promptly remove all damaged or unsuitable materials/equipment from the job site and replace with new specified materials/equipment at no additional cost to Contract.

1.5 GUARANTEE

PART 2 PRODUCTS

2.1 MATERIALS

In-Line Circulator, HRP-3, 4 :

Type: In-line circulating pump, hot water recirculating pump 3, 4

Casing: Bronze, rated for 125 psi working pressure.
Impeller: Bronze; plastic not permitted.
Shaft: Alloy steel with integral thrust collar and 2 oil lubricated bronze sleeve bearings.
Seal: Carbon rotating against stationary ceramic seat.
Performance: See drawing schedule.
Setup for 100% in place redundancy.

Sump Pumps:

SP-2: Waste Effluent Pump Type: Completely submersible vertical centrifugal; Duplex pump capable of running dry without damage to components.
Casing: Cast-iron, 2 inch NPT discharge, 5/8" solids handling.
Impeller: Thermoplastic, non-clog type, on corrosion-resistant stainless steel shaft.
Bearings: Ball bearings, grease lubricated.
Mechanical Seals: Ceramic against carbon sealing faces, stainless steel metal parts.
Motor: fully submerged in oil with thermal overload protection; designed for continuous operation.
Accessories: Oil and water resistant power cord with 3-prong connector, and non-corrosive mercury float.
Duplex Controls: Remote mounted NEMA 1 control cabinet with piano hinged door, grounding lug, and enclosing following:

2 circuit breakers
2 magnetic contactors
2 HAND/OFF/AUTO selector switches
1 electric alternator
2 control circuit transformers

2 green pump running lights
1 red indicator light
1 alarm bell mounted on panel door
1 alarm silencing switch
1 numbered and wired terminal strip

Performance: See Pump Schedule on Drawing P7.2.

Acceptable Manufacturers:
Weil Zoeller
Or Approved Equal

Sump Basin: Basin with inlets of suitable size and location to accommodate pipe sizes and location as indicated on drawings.

Cover Plate:
Cast-iron or Steel, circular cover with bolted inspection opening, bolted access opening for each pump, gasketed vent opening, gasketed discharge opening for each pump, and gasketed power and control cord openings.

Size: 30 inches I.D. by 84 inches deep.

Entire installation shall be water and gas tight.

SP-4: Clear Water Type: Completely submersible vertical centrifugal; duplex pumps capable of running dry without damage to components.

a. Casing: Cast iron.

b. Impeller: Thermoplastic on corrosion-resistant stainless steel shaft.

c. Bearings: Ball bearings, grease lubricated.

d. Mechanical Seals: Ceramic against carbon sealing faces, stainless steel metal parts.

e. Motor: Fully submerged in oil with thermal overload protection; designed for continuous operation.

f. Accessories: Oil and water resistant power cord with 3-prong connector, and non-corrosive [mercury float] [diaphragm pressure switch].

g. Duplex Controls: Each pump control completely independent; remote mounted NEMA 3R control cabinet with piano hinged door, grounding lug, and enclosing following:

(2) Circuit breaker
(2) Magnetic contacts
(2) ON/OFF selector switch
(1) Electric alternator
(2) Control circuit transformer
(2) Green pump running light
(1) Red indicator light
(1) Alarm bell mounted on panel door
(1) Alarm silencing switch
(1) Numbered and wired terminal strip

h. Performance: See drawing schedule.

i. Acceptable Manufacturers:
Weil Pump Company : 1400 Series
Zoeller

Sump Basin: Basin with inlet(s) of suitable size and location to accommodate pipe size(s) and location(s) as indicated on drawings.

a. Cover Plate:
Cast-iron or Steel, circular cover with bolted inspection

opening, bolted access opening for each pump, gasketed vent opening, gasketed discharge opening for each pump, and gasketed power and control cord openings.

b. Size: 36 inches I.D. by 84 inches deep.

c. Entire installation shall be water and gas tight.

PART 3 EXECUTION

3.1 INSPECTION

The Contractor shall examine the areas and conditions under which the work of this Section will be installed, and shall correct conditions detrimental to the timely and proper completion of the work, or bring them to the attention of the Project Supervising Representative for correction. Do not proceed until unsatisfactory conditions have been corrected.

The Contractor shall verify the location of all existing services prior to all new installations. Any damages to existing services caused by the Contractor shall be repaired at the expense of the Contractor.

The Contractor shall schedule new connections to and extensions from the existing utilities as indicated on the contract drawings, so existing facility operations are not interrupted.

3.2 INSTALLATION

Decrease from line size, with long radius reducing elbows or reducers.

Support piping adjacent to pump such that no weight is carried on pump casings.

Provide supports under elbows on pump suction and discharge line sizes 4 inches and over.

Ensure pumps operate at specified system fluid temperatures without vapor binding and cavitation; are non-overloading in parallel or individual operation; and operate within 25% of midpoint of published maximum efficiency curve.

Access: Provide access space around plumbing pumps for service but in no case less than that recommended by manufacturer.

Electrical Wiring:

Install electrical devices furnished by manufacturer but not specified to be factory-mounted.

Furnish copy of manufacturer's wiring diagram submittal to Electrical Installer/Contractor.

Verify that electrical wiring installation is in accordance with manufacturer's submittal and installation requirements of Division 16 Sections.

Do not proceed with equipment start-up until wiring installation is acceptable to equipment installer.

3.3 FIELD QUALITY CONTROL

The contractor shall arrange for the Pump Manufacturer to provide a factory-trained representative as required for the purpose of supervising installation, start-up and final field acceptance testing, and providing instructions to the owners operating personnel in the proper operation and maintenance of the equipment in this section.

Upon completion of installation of pumps, and after motors have been energized with normal power source, bleed air form pump casings and test pumps to demonstrate compliance with specifications.

Lubricate pumps before start-up. Start-up in accordance with manufacturer's instructions.

Clean factory-finished surfaces. Repair all marred or scratched surfaces with pump manufacturer's touch-up paint.

Where possible, field correct malfunctioning units, then retest to demonstrate compliance. Replace units which cannot be satisfactorily corrected.

-- End of Section --

SECTION TABLE OF CONTENTS

DIVISION 15 - MECHANICAL

SECTION 15485

PLUMBING SEQUENCE OF OPERATION

mm/yy

PART 1 GENERAL

1.1 DESCRIPTION

PART 2 PRODUCTS

2.1 MATERIALS

PART 3 EXECUTION

3.1 PLUMBING CONTROL SEQUENCE

-- End of Section Table of Contents --

SECTION 15485

PLUMBING SEQUENCE OF OPERATION

mm/yy

PART 1 GENERAL

1.1 DESCRIPTION

Control Sequence: Manner and chronological sequence in which, and methods by which controls shall function.

PART 2 PRODUCTS

2.1 MATERIALS

See drawings and applicable specifications

PART 3 EXECUTION

3.1 PLUMBING CONTROL SEQUENCE

Domestic Hot Water Recirc Pump (HWP-HRP-3 and 4) Control:

Pump shall run continuously unless manually de-energized.

Each pair of pumps shall be manually alternated. One pump per system shall operate at any time.

-- End of Section --

SECTION TABLE OF CONTENTS

DIVISION 15 - MECHANICAL

SECTION 15556

FORCED HOT WATER HEATING SYSTEMS

01/90

PART 1 GENERAL

1.1 REFERENCES
1.2 SUBMITTALS
1.3 QUALIFICATIONS
1.4 DELIVERY AND STORAGE
1.5 FIELD MEASUREMENTS

PART 2 PRODUCTS

2.1 GENERAL MATERIAL AND EQUIPMENT REQUIREMENTS
2.1.1 Standard Products
2.1.2 Nameplates
2.1.3 Not Used
2.1.4 Asbestos Prohibition
2.1.5 Electrical Work
2.2 PIPING, TUBING, AND FITTINGS
2.2.1 General
2.2.2 Not Used
2.2.3 Not Used
2.2.4 Gauge Piping
2.2.5 Copper Tubing
2.2.6 Not Used
2.2.7 Not Used
2.2.8 Not Used
2.2.9 Not Used
2.2.10 Fittings for Copper Tubing
2.2.11 Not Used
2.2.12 Pipe Threads
2.2.13 Nipples
2.2.14 Unions
2.2.15 Adapters
2.2.16 Dielectric Unions
2.2.17 Not Used
2.2.18 Flexible Pipe Connectors
2.3 MATERIALS AND ACCESSORIES
2.3.1 Not Used
2.3.2 Solder
2.3.3 Solder, Silver
2.3.4 Thermometers
2.3.5 Gauges
2.3.6 Not Used
2.3.7 Not Used
2.3.8 Not Used
2.3.9 Not Used
2.3.10 Not Used

2.3.11 Pipe Hangers, Inserts, and Supports
2.4 VALVES FOR LOW TEMPERATURE WATER HEATING AND STEAM SYSTEMS
2.4.1 Check Valves
2.4.2 Globe Valves
2.4.3 Angle Valves
2.4.4 Gate Valves
2.4.5 Air Vents
2.4.6 Balancing Valves
2.4.7 Automatic Flow Control Valves
2.4.8 Not Used
2.4.9 Not Used
2.5 Not USed
2.6 COLD WATER CONNECTIONS
2.6.1 Strainers
2.6.2 Pressure Regulating Valve
2.7 Not Used
2.8 Not Used
2.9 Not Used
2.10 Not Used
2.11 Not Used
2.12 SYSTEM EQUIPMENT AND ACCESSORIES
2.12.1 Not Used
2.12.2 Not Used
2.12.2.1 Not Used
2.12.2.2 Not Used
2.12.3 Pressure Gauges and Thermometers
2.12.4 Not Used
2.12.5 Not Used
2.12.6 Drains
2.12.7 Strainers
2.13 INSULATION
2.14 FACTORY PAINTED EXPOSED SPACE HEATING EQUIPMENT
2.15 Not Used
2.16 UNIT HEATERS (UH's)
2.16.1 Propeller Fan Heaters
2.16.2 Not Used
2.16.3 Not Used
2.16.4 [Enter Appropriate Subpart Title Here]
2.16.5 Controls
2.17 HEATING AND VENTILATING UNITS
2.18 WATER TREATMENT SYSTEM
2.18.1 Not Used
2.18.2 Not Used
2.18.3 Not Used
2.18.4 Glycol Solutions
2.18.5 Test Kits

PART 3 EXECUTION

3.1 INSTALLATION
3.2 FIELD PAINTING
3.3 Not Used
3.4 PIPING
3.4.1 Joints
3.4.2 Low Temperature Systems
3.4.3 Not Used
3.4.4 Not Used
3.4.5 Threaded Joints
3.4.6 Not Used

3.4.7 Flanged Joints or Unions
3.4.8 Flared and Sweated Pipe and Tubing
3.4.9 Mechanical Tee Joint
3.5 CONNECTIONS TO EQUIPMENT
3.5.1 Low Temperature Water and Steam and Return Connections
3.5.2 Not Used
3.6 BRANCH CONNECTIONS
3.6.1 Low Temperature Water Branches
3.6.2 Not Used
3.6.3 Not Used
3.7 RISERS
3.8 SUPPORTS
3.8.1 General
3.8.1.1 Not Used
3.8.1.2 Structural Attachments
3.8.1.3 Multiple Pipe Runs
3.8.2 Pipe Hangers, Inserts, and Supports
3.8.3 Not Used
3.9 PIPE SLEEVES
3.9.1 Pipe Passing Through Concrete or Masonry
3.9.2 Pipes Passing Through Waterproofing Membranes
3.9.3 Mechanical Seal Assembly
3.9.4 Counterflashing Alternate
3.9.5 Waterproofing Clamping Flange
3.9.6 Fire Seal
3.9.7 Escutcheons
3.10 ANCHORS
3.11 PIPE EXPANSION
3.11.1 Expansion Loops
3.11.2 Not Used
3.11.3 Not Used
3.11.4 Not Used
3.12 VALVES AND EQUIPMENT ACCESSORIES
3.12.1 Valves and Equipment
3.12.2 Not Used
3.12.3 Thermometer Socket
3.12.4 Air Vents
3.13 Not Used
3.14 UNIT HEATERS
3.15 INSULATION
3.16 TESTING AND CLEANING
3.16.1 Pressure Testing
3.16.2 Test of Backflow Prevention Assemblies
3.16.3 Cleaning
3.16.4 Not Used
3.17 TESTING, ADJUSTING AND BALANCING
3.18 MANUFACTURER'S SERVICES
3.19 FRAMED INSTRUCTIONS
3.20 FIELD TRAINING

-- End of Section Table of Contents --

SECTION 15556

FORCED HOT WATER HEATING SYSTEMS
01/90

PART 1 GENERAL

1.1 REFERENCES

The publications listed below form a part of this specification to the extent referenced. The publications are referred to in the text by basic designations only.

AMERICAN SOCIETY FOR TESTING AND MATERIALS (ASTM)

ASTM A 733	(1993) Welded and Seamless Carbon Steel and Austenitic Stainless Steel Pipe Nipples
ASTM B 32	(1996) Solder Metal
ASTM B 62	(1993) Composition Bronze or Ounce Metal Castings
ASTM B 75	(1995a) Seamless Copper Tube
ASTM B 88	(1996) Seamless Copper Water Tube
ASTM B 88M	(1996) Seamless Copper Water Tube (Metric)
ASTM B 251	(1993) Wrought Seamless Copper and Copper-Alloy Tube
ASTM B 687	(1996) Brass, Copper, and Chromium-Plated Pipe Nipples
ASTM B 813	(1993) Liquid and Paste Fluxes for Soldering Applications of Copper and Copper Alloy Tube
ASTM B 828	(1992) Making Capillary Joints by Soldering of Copper and Copper Alloy Tube and Fittings
ASTM D 1384	(1996) Corrosion Test for Engine Coolants in Glassware
ASTM D 3308	(1991a) PTFE Resin Skived Tape

AMERICAN SOCIETY OF MECHANICAL ENGINEERS (ASME)

ASME B1.20.1	(1983; R 1992) Pipe Threads, General Purpose (Inch)
ASME B16.15	(1985; R 1994) Cast Bronze Threaded Fittings Classes 125 and 250

ASME B16.18	(1984; R 1994) Cast Copper Alloy Solder Joint Pressure Fittings
ASME B16.22	(1995) Wrought Copper and Copper Alloy Solder Joint Pressure Fittings
ASME B16.26	(1988) Cast Copper Alloy Fittings for Flared Copper Tubes
ASME B16.39	(1986; R 1994) Malleable Iron Threaded Pipe Unions Classes 150, 250, and 300
ASME B31.1	(1995; B31.1a; B31.1b; B31.1c) Power Piping
ASME B40.1	(1991) Gauges - Pressure Indicating Dial Type - Elastic Element

AMERICAN WELDING SOCIETY (AWS)

AWS A5.8	(1992) Filler Metals for Brazing and Braze Welding

MANUFACTURERS STANDARDIZATION SOCIETY OF THE VALVE AND FITTINGS INDUSTRY (MSS)

MSS SP-58	(1993) Pipe Hangers and Supports - Materials, Design and Manufacture
MSS SP-69	(1996) Pipe Hangers and Supports - Selection and Application
MSS SP-70	(1990) Cast Iron Gate Valves, Flanged and Threaded Ends
MSS SP-71	(1997) Cast Iron Swing Check Valves, Flanges and Threaded Ends
MSS SP-80	(1997) Bronze Gate, Globe, Angle and Check Valves
MSS SP-85	(1994) Cast Iron Globe & Angle Valves, Flanged and Threaded Ends

NATIONAL ASSOCIATION OF PLUMBING-HEATING-COOLING CONTRACTORS (NAPHCC)

NAPHCC-01	(1996) National Standard Plumbing Code

1.2 SUBMITTALS

None.

1.3 QUALIFICATIONS

Procedures and welders shall be qualified in accordance with the code under which the welding is specified to be accomplished.

1.4 DELIVERY AND STORAGE

All equipment delivered and placed in storage shall be stored with protection from the weather, excessive humidity and excessive temperature variation; and dirt, dust, or other contaminants.

1.5 FIELD MEASUREMENTS

The Contractor shall become familiar with all details of the work, verify all dimensions in the field, and shall advise the Contracting Officer of any discrepancy before performing the work.

PART 2 PRODUCTS

2.1 GENERAL MATERIAL AND EQUIPMENT REQUIREMENTS

2.1.1 Standard Products

Materials and equipment shall be the standard products of a manufacturer regularly engaged in the manufacture of such products and shall essentially duplicate items that have been in satisfactory use for at least 2 years prior to bid opening. Equipment shall be supported by a service organization that is, in the opinion of the Contracting Officer, reasonably convenient to the site.

2.1.2 Nameplates

Each major item of equipment shall have the manufacturer's name, address, type or style, model or serial number, and catalog number on a plate secured to the item of equipment.

2.1.3 Not Used

2.1.4 Asbestos Prohibition

Asbestos and asbestos-containing products shall not be used.

2.1.5 Electrical Work

Electrical motor driven equipment specified shall be provided complete with motors, motor starters, and controls. Electric equipment (including motor efficiencies), and wiring shall be in accordance with Section 16415 ELECTRICAL WORK, INTERIOR. High efficiency motors shall be used. Electrical characteristics shall be as specified or indicated. Motor starters shall be provided complete with thermal overload protection and other appurtenances necessary for the motor control specified. Each motor shall be of sufficient size to drive the equipment at the specified capacity without exceeding the nameplate rating of the motor. Manual or automatic control and protective or signal devices required for the operation specified, and any control wiring, conduit, and connection to power required for controls and devices but not shown shall be provided.

2.2 PIPING, TUBING, AND FITTINGS

2.2.1 General

Piping, tubing, and fittings shall be as follows:

a. Low temperature water piping shall be copper tubing with solder-joint, flared-tube or grooved mechanical joint fittings.

2.2.2 Not Used

2.2.3 Not Used

2.2.4 Gauge Piping

Piping shall be copper tubing for low temperature water.

2.2.5 Copper Tubing

Tubing shall conform to ASTM B 88, ASTM B 88M, Type K or L. Tubing for compressed air tubing shall conform to ASTM B 251.

2.2.6 Not Used

2.2.7 Not Used

2.2.8 Not Used

2.2.9 Not Used

2.2.10 Fittings for Copper Tubing

Wrought copper and bronze fittings shall conform to ASME B16.22 and ASTM B 75. Cast copper alloy fittings shall conform to ASME B16.18 and ASTM B 828. Flared fittings shall conform to ASME B16.26 and ASTM B 62. Adaptors may be used for connecting tubing to flanges and threaded ends of valves and equipment. Extracted brazed tee joints produced with an acceptable tool and installed as recommended by the manufacturer may be used. Cast bronze threaded fittings shall conform to ASME B16.15.

2.2.11 Not Used

2.2.12 Pipe Threads

Pipe threads shall conform to ASME B1.20.1.

2.2.13 Nipples

Nipples shall conform to ASTM A 733 or ASTM B 687, standard weight.

2.2.14 Unions

Unions shall conform to ASME B16.39, type to match adjacent piping.

2.2.15 Adapters

Adapters for copper tubing shall be brass or bronze for soldered fittings.

2.2.16 Dielectric Unions

Unions shall conform to the tensile strength and dimensional requirements specified in ASME B16.39. Unions shall have metal connections on both ends to match adjacent piping. Metal parts of dielectric unions shall be separated so that the electrical current is below 1 percent of the galvanic current which would exist upon metal-to-metal contact.

2.2.17 Not Used

2.2.18 Flexible Pipe Connectors

Flexible pipe connectors shall be designed for 125 psi or 150 psi service as appropriate for the static head plus the system head, and 250 degrees F. Connectors shall be installed where indicated. The flexible section shall be constructed of rubber, tetrafluoroethylene resin, or corrosion-resisting steel, bronze, monel, or galvanized steel. Materials used and the configuration shall be suitable for the pressure, vacuum, temperature, and circulating medium. The flexible section may have threaded, welded, soldered, flanged, grooved, or socket ends. Flanged assemblies shall be equipped with limit bolts to restrict maximum travel to the manufacturer's standard limits. Unless otherwise indicated, the length of the flexible connectors shall be as recommended by the manufacturer for the service intended. Internal sleeves or liners, compatible with circulating medium, shall be provided when recommended by the manufacturer. Covers to protect the bellows shall be provided where indicated.

2.3 MATERIALS AND ACCESSORIES

2.3.1 Not Used

2.3.2 Solder

Solder shall conform to ASTM B 32. Solder and flux shall be lead free. Solder flux shall be liquid or paste form, non-corrosive and conform to ASTM B 813.

2.3.3 Solder, Silver

Silver solder shall conform to AWS A5.8.

2.3.4 Thermometers

Thermometers shall have brass, malleable iron, or aluminum alloy case and frame, clear protective face, permanently stabilized glass tube with indicating-fluid column, white face, black numbers, and a 9 inch scale, and thermometers shall have rigid stems with straight, angular, or inclined pattern.

2.3.5 Gauges

Gauges shall conform to ASME B40.1.

2.3.6 Not Used

2.3.7 Not Used

2.3.8 Not Used

2.3.9 Not Used

2.3.10 Not Used

2.3.11 Pipe Hangers, Inserts, and Supports

Pipe hangers, inserts, and supports shall conform to MSS SP-58 and MSS SP-69.

2.4 VALVES FOR LOW TEMPERATURE WATER HEATING AND STEAM SYSTEMS

2.4.1 Check Valves Crane No. 1342 - Swing, Y-pattern, bronze body, brass or bronze disc, screwed cap, solder ends, 300 lb. (WOG), or approved equal.

Sizes 2-1/2 inches and less, bronze shall conform to MSS SP-80, Type 3 or 4, Class 125. Sizes 3 inches through 24 inches, cast iron shall conform to MSS SP-71, Type III or IV, Class 125.

2.4.2 Globe Valves

Sizes 2-1/2 inches and less, bronze shall conform to MSS SP-80, Type 1, 2 or 3, Class 125. Sizes 3 inches through 12 inches, cast iron shall conform to MSS SP-85, Type III, Class 125.

2.4.3 Angle Valves

Sizes 2-1/2 inches and less, bronze shall conform to MSS SP-80, Type 1, 2 or 3, Class 125. Sizes 3 inches through 12 inches, cast iron shall conform to MSS SP-85, Type III, Class 125.

2.4.4 Gate Valves

Sizes 2-1/2 inches and less, bronze shall conform to MSS SP-80, Type 1 or 2, Class 125. Sizes 3 inches through 48 inches, cast iron shall conform to MSS SP-70, Type I, Class 125, Design OT or OF (OS&Y), bronze trim.

2.4.5 Air Vents

Manual Air Vent:

Coin-operated vent, suitable for 150 psig working pressure and 225 F water temperature.

Automatic Air Vent:

Float Type: Cast iron body, stainless steel float, valve and valve seat, with ¾ inch inlet and ¼ inch air outlet tappings, [¼ inch test petcock in cap], and [1/8] [5/64] inch orifice. Suitable for 150 psig working pressure and 240 F water temperature.

Float Type: Stainless steel body and float, chrome steel valve and seat, with ¾ inch inlet and ½ inch air outlet tappings, and [1/8] [5/64] inch orifice. Suitable for 175 psig working pressure and 240 F water temperature.

Washer Type: All brass with hygrosopic fiberdiscs, vent parts, adjustable cap for manual shut-off or separate isolating cock on inlet, and integral spring-loaded ball check valve to prevent water leakage. Suitable for indicated system pressures and water temperatures.

Air vents shall be provided at all piping high points in water systems, with block valve in inlet and internal check valve to allow air vent to be isolated for cleaning and inspection. Outlet connection shall be piped to nearest open site or suitable drain, or terminated 12 inches above finished grade. Pressure rating of air vent shall match pressure rating of piping system. Body and cover shall be cast iron or semi-steel with stainless steel or copper float and stainless steel or bronze internal parts. Air vents installed in piping in chase walls or other inaccessible

places shall be provided with an access panel.

2.4.6 Balancing Valves

Balancing Valves:

Cast-iron or bronze body with bronze or brass disc calibrated balance valve with readout valves fitted with integral check valves to prevent loss of fluid when attaching monitoring kit. Integral pointer indicating degree of valve opening. Internal seals constructed for 125 psig working pressure.

Provide preformed polyurethane insulation suitable for use on heating or cooling systems.

Provide portable readout kit designed for use with balancing valves including all hoses, shut-off valves, vent valves, carrying case and hanger.

In larger sizes valve may consist of separate flow measuring device coupled with separate combination balance and shut-off valve.

Balancing valves shall have meter connections with positive shutoff valves. An integral pointer shall register degree of valve opening. Valves shall be calibrated so that flow in gpm can be determined when valve opening in degrees and pressure differential across valve is known. Each balancing valve shall be constructed with internal seals to prevent leakage and shall be supplied with preformed insulation. Valves shall be suitable for 250 degrees F temperature and working pressure of the pipe in which installed. Valve bodies shall be provided with tapped openings and pipe extensions with shutoff valves outside of pipe insulation. The pipe extensions shall be provided with quick connecting hose fittings for a portable meter to measure the pressure differential. One portable differential meter shall be furnished. The meter suitable for the operating pressure specified shall be complete with hoses, vent, and shutoff valves and carrying case. In lieu of the balancing valve with integral metering connections, a ball valve or plug valve with a separately installed orifice plate or venturi tube may be used for balancing. Plug valves and ball valves 8 inches or larger shall be provided with manual gear operators with position indicators.

2.4.7 Automatic Flow Control Valves

The valves shall be designed to be sensitive to pressure differential across the valve to provide the required opening. The valves shall be selected for the flow required and provided with a permanent nameplate or tag carrying a record of the factory-determined flow rate and flow control pressure levels. Valves shall control the flow within 5 percent of the tag rating. Valves shall be suitable for the maximum operating pressure of 125 psi or 150 percent of the system operating pressure, whichever is greater. Where the available system pressure is not adequate to provide the minimum pressure differential that still allows flow control, the system pump head shall be increased. Valves shall be suitable for the maximum system operating temperature and pressure. Valve materials shall be same as specified for low temperature heating system check, globe, angle and gate valves. Valve operator shall be the electric motor type or pneumatic type as applicable. Valve operator shall be capable of positive shutoff against the system pump head.

2.4.8 Not Used

2.4.9 Not Used

2.5 Not USed

2.6 COLD WATER CONNECTIONS

Connections shall be provided which include consecutively in line a strainer, backflow prevention device, and water pressure regulator. The backflow prevention device shall be provided as indicated and in compliance with Section 15400 PLUMBING, GENERAL PURPOSE.

2.6.1 Strainers

Y-type strainers shall be the same size as the pipelines in which they are installed. Strainer bodies shall be rated for 125 pound service, with bottoms drilled and plugged. Bodies shall have arrows cast on the sides to indicate the direction of flow. Each strainer shall be equipped with a removable cover and sediment basket. Basket shall not be less than 22 gauge and shall have perforations to provide a net free area through the basket of at least four times that of the entering pipe.

2.6.2 Pressure Regulating Valve

Valve shall be a type that will not stick nor allow pressure to build up on the low side. Valve shall be set to maintain a terminal pressure approximately 5 psi in excess of the static head on the system and shall operate within a 20 psi variation regardless of initial pressure and without objectionable noise under any condition of operation.

2.7 Not Used

2.8 Not Used

2.9 Not Used

2.10 Not Used

2.11 Not Used

2.12 SYSTEM EQUIPMENT AND ACCESSORIES

2.12.1 Not Used

2.12.2 Not Used

2.12.2.1 Not Used

2.12.2.2 Not Used

2.12.3 Pressure Gauges and Thermometers

A thermometer and pressure gauge shall be provided on the high temperature water supply and return mains. Thermometers shall be separable socket type.

2.12.4 Not Used

2.12.5 Not Used

2.12.6 Drains

A drain connection with 3/4 inch hose bib shall be installed at the lowest point in the low temperature water return main near the heat exchanger. In addition, threaded drain connections with threaded cap or plug shall be installed wherever required for thorough draining of the low temperature water system.

2.12.7 Strainers

Basket or Y-type strainer-body connections shall be the same size as the pipe lines in which the connections are installed. The bodies shall have arrows clearly cast on the sides to indicate the direction of flow. Each strainer shall be equipped with an easily removable cover and sediment basket. The body or bottom opening shall be equipped with nipple and gate valve for blowdown. The basket for steam systems shall be of not less than 0.025 inch thick stainless steel, or monel with small perforations of sufficient number to provide a net free area through the basket of at least 2.5 times that of the entering pipe. The flow shall be into the basket and out through the perforations.

2.13 INSULATION

Shop and field applied insulation shall be as specified in Section 15080 THERMAL INSULATION FOR MECHANICAL SYSTEMS.

2.14 FACTORY PAINTED EXPOSED SPACE HEATING EQUIPMENT

Radiator and convector enclosures shall be coated with the manufacturer's standard rust inhibiting primer for painting in the field as specified in Section 09900 PAINTING, GENERAL. All other exposed heating equipment shall be painted at the factory with the manufacturer's standard primer and enamel finish.2.15 Not Used

2.16 UNIT HEATERS (UH's)

Heaters shall be as specified below, and shall have a heating capacity not in excess of 125 percent of the capacity indicated.

2.16.1 Propeller Fan Heaters

Heaters shall be designed for suspension and arranged for horizontal or vertical discharge of air as indicated. Casings shall be not less than 20 gauge black steel and finished with lacquer or enamel. Suitable stationary deflectors shall be provided to assure proper air and heat penetration capacity at floor level based on established design temperature. Suspension from heating pipes will not be permitted. Fans for vertical discharge type heaters shall operate at speeds not in excess of 1,200 rpm, except that units with 80,000 Btu output capacity or less may operate at speeds up to 1,800 rpm.Horizontal discharge type unit heaters shall have discharge or face velocities not in excess of the following:

Unit Capacity, cfm	Face Velocity, fpm
Up to 1,000	800
1,001 to 3,000	900
3,001 and over	1,000

Unit Capacity, cfm Face Velocity, fpm

2.16.2 Not Used

2.16.3 Not Used2.16.4 [Enter Appropriate Subpart Title Here]

2.16.5 Controls

Controls shall be provided as specified in Section 15950 HEATING, VENTILATING, AND AIR CONDITIONING HVAC CONTROL SYSTEMS.

2.17 HEATING AND VENTILATING UNITS

Heating and ventilating units shall be as specified in Section 15895 AIR SUPPLY, DISTRIBUTION, VENTILATION, AND EXHAUST SYSTEMS.

2.18 WATER TREATMENT SYSTEM Not Used

2.18.1 Not Used

2.18.2 Not Used

2.18.3 Not Used

2.18.4 Glycol Solutions

A 45 percent concentration by volume of industrial grade ethylene glycol shall be provided. The glycol shall be tested in accordance with ASTM D 1384 with less than 0.5 mils penetration per year for all system metals. The glycol shall contain corrosion inhibitors. Silicate based inhibitors shall not be used. The solution shall be compatible with pump seals, other elements of the system, and all water treatment chemicals used within the system.

2.18.5 Test Kits

All required test kits and reagents for determining the proper water conditions shall be provided.

PART 3 EXECUTION

3.1 INSTALLATION

All work shall be installed as indicated and in accordance with the manufacturer's diagrams and recommendations.

3.2 FIELD PAINTING

Field painting of exposed pipe shall be as specified in Section 09900 PAINTING, GENERAL. Field painting of factory primed equipment shall be as specified in Section 09900 PAINTING, GENERAL.

3.3 Not Used

3.4 PIPING

Pipe shall be cut accurately to measurements established at the job site and worked into place without springing or forcing, completely clearing all

windows, doors, and other openings. Cuttings or other weakening of the building structure to facilitate piping installation will not be permitted without written approval. Pipe or tubing shall be cut square, shall have burrs removed by reaming, and shall be so installed as to permit free expansion and contraction without causing damage to building structure, pipe, joints, or hangers. Changes in direction shall be made with factory made fittings, except that bending of pipe up to 4 inches will be permitted, provided a pipe bender is used and wide sweep bends are formed. The center line radius of bends shall not be less than six diameters of the pipe. Bent pipe showing kinks, wrinkles, flattening, or other malformations will not be accepted. Vent pipes shall be installed through the roof as indicated and shall be flashed as specified. Horizontal mains shall pitch up or down in the direction of flow as indicated. The grade shall be not less than 1 inch in 40 feet. Reducing fittings shall be used for changes in pipe sizes. Open ends of pipelines and equipment shall be capped or plugged during installation to keep dirt or other foreign materials out of the systems. Pipe not otherwise specified shall be uncoated. Unions and other components for copper pipe or tubing shall be brass or bronze. Connections between ferrous and copper piping shall be electrically isolated using dielectric unions.

3.4.1 Joints

Except as otherwise specified, joints used on steel pipe shall be threaded for fittings 1 inch and smaller; threaded or welded for 1-1/4 inches up through 2-1/2 inches; and flanged or welded for 3 inches and larger. Joints between sections of copper tubing or copper pipe shall be flared or sweated. Pipe and fittings 1-1/4 inches and larger installed in inaccessible conduits or trenches beneath concrete floor slabs shall be welded. Unless otherwise specified, connections to equipment shall be made with black malleable iron unions for pipe 2-1/2 inches or smaller in diameter, and with flanges for pipe 3 inches or larger in diameter.

3.4.2 Low Temperature Systems

Piping may have threaded, welded, flanged or flared, sweated, or grooved mechanical joints as applicable and as specified. Reducing fittings shall be used for changes in pipe sizes. In horizontal lines, reducing fittings shall be the eccentric type to maintain the top of the adjoining pipes at the same level.

3.4.3 Not Used

3.4.4 Not Used

3.4.5 Threaded Joints

Threaded joints shall be made with tapered threads properly cut, and shall be made tight with PTFE tape complying with ASTM D 3308, or equivalent thread joint compound applied to the male threads only, and in no case to the fittings.

3.4.6 Not Used

3.4.7 Flanged Joints or Unions

Flanged joints or unions shall be provided in each line immediately preceding the connection to each piece of equipment or material requiring maintenance such as coils, pumps, control valves, and similar items.

Flanged joints shall be faced true, provided with gaskets, and made square and tight. Full-faced gaskets shall be used with cast iron flanges.

3.4.8 Flared and Sweated Pipe and Tubing

Pipe and tubing shall be cut square and burrs shall be removed. Both inside of fittings and outside of tubing shall be cleaned with an abrasive before sweating. Care shall be taken to prevent annealing of fittings and hard drawn tubing when making connection. Installation shall be made in accordance with the manufacturer's recommendations. Changes in direction of piping shall be made with flared or soldered fittings only. Solder and flux shall be lead free. Joints for soldered fittings shall be made with silver solder or 95:5 tin-antimony solder. Cored solder shall not be used. Joints for flared fittings shall be of the compression pattern. Swing joints or offsets shall be provided on all branch connections, mains, and risers to provide for expansion and contraction forces without undue stress to the fittings or to short lengths of pipe or tubing.

3.4.9 Mechanical Tee Joint

An extracted mechanical tee joint may be made in copper tube. Joint shall be produced with an appropriate tool by drilling a pilot hole and drawing out the tube surface to form a collar having a minimum height of three times the thickness of the tube wall. To prevent the branch tube from being inserted beyond the depth of the extracted joint, dimpled depth stops shall be provided. The branch tube shall be notched for proper penetration into fitting to assure a free flow joint. Joints shall be brazed in accordance with NAPHCC-01. Soldered joints will not be permitted.

3.5 CONNECTIONS TO EQUIPMENT

Supply and return connections shall be provided by the Contractor unless otherwise indicated. Valves and traps shall be installed in accordance with the manufacturer's recommendations. Unless otherwise indicated, the size of the supply and return pipes to each piece of equipment shall be not smaller than the connections on the equipment. No bushed connections shall be permitted. Change in sizes shall be made with reducers or increasers only.

3.5.1 Low Temperature Water and Steam and Return Connections

Connections, unless otherwise indicated, shall be made with malleable iron unions for piping 2-1/2 inches or less in diameter and with flanges for pipe 3 inches or more in diameter.

3.5.2 Not Used

3.6 BRANCH CONNECTIONS

Branches shall pitch up or down as indicated, unless otherwise specified. Connection shall be made to insure unrestricted circulation, eliminate air pockets, and permit drainage of the system.

3.6.1 Low Temperature Water Branches

Branches taken from mains shall pitch with a grade of not less than 1 inch in 10 feet.

3.6.2 Not Used

3.6.3 Not Used

3.7 RISERS

The location of risers is approximate. Exact locations of the risers shall be as approved.

3.8 SUPPORTS

3.8.1 General

Hangers used to support piping 2 inches and larger shall be fabricated to permit adequate adjustment after erection while supporting the load. Pipe guides and anchors shall be installed to keep pipes in accurate alignment, to direct the expansion movement, and to prevent buckling, swaying, and undue strain. All piping subjected to vertical movement when operating temperatures exceed ambient temperatures, shall be supported by variable spring hangers and supports or by constant support hangers. Where threaded rods are used for support, they shall not be formed or bent.

3.8.1.1 Not Used

3.8.1.2 Structural Attachments

Structural steel brackets required to support piping, headers, and equipment, but not shown, shall be provided under this section. Material and installation shall be as specified under Section 05120 STRUCTURAL STEEL. Pipe hanger loads suspended from steel joist panel points shall not exceed 50 pounds. Loads exceeding 50 pounds shall be suspended from panel points.

3.8.1.3 Multiple Pipe Runs

In the support of multiple pipe runs on a common base member, a clip or clamp shall be used where each pipe crosses the base support member. Spacing of the base support members shall not exceed the hanger and support spacing required for any individual pipe in the multiple pipe run.

3.8.2 Pipe Hangers, Inserts, and Supports

Pipe hangers, inserts and supports shall conform to MSS SP-58 and MSS SP-69, except as specified as follows:

a. Types 5, 12, and 26 shall not be used.

b. Type 3 shall not be used on insulated pipe which has a vapor barrier. Type 3 may be used on insulated pipe that does not have a vapor barrier if clamped directly to the pipe and if the clamp bottom does not extend through the insulation and the top clamp attachment does not contact the insulation during pipe movement.

c. Type 18 inserts shall be secured to concrete forms before concrete is placed. Continuous inserts which allow more adjustment may be used if they otherwise meet the requirements for Type 18 inserts.

d. Type 19 and 23 C-clamps shall be torqued per MSS SP-69 and have both locknuts and retaining devices, furnished by the manufacturer. Field-fabricated C-clamp bodies or retaining

devices are not acceptable.

e. Type 20 attachments used on angles and channels shall be furnished with an added malleable iron heel plate or adapter.

f. Type 24 may be used only on trapeze hanger systems or on fabricated frames.

g. Where Type 39 saddle or Type 40 shield are permitted for a particular pipe attachment application, the Type 39 saddle shall be used on all pipe 4 inches and larger.

h. Horizontal pipe supports shall be spaced as specified in MSS SP-69 and a support shall be installed not over 1 foot from the pipe fitting joint at each change in direction of the piping. Pipe supports shall be spaced not over 5 feet apart at valves.

i. Vertical pipe shall be supported at each floor, except at slab-on-grade, and at intervals of not more than 15 feet,except that pipe shall be supported not more than 8 feet from end of risers, and at vent terminations.

j. Type 35 guides using steel, reinforced PTFE or graphite slides shall be provided where required to allow longitudinal pipe movement. Lateral restraints shall be provided as required. Slide materials shall be suitable for the system operating temperatures, atmospheric conditions and bearing loads encountered. Where steel slides do not require provision for restraint or lateral movement, an alternate guide method may be used. On piping 4 inches and larger, a Type 39 saddle may be welded to the pipe and freely rest on a steel plate. On piping under 4 inches, a Type 40 protection shield may be attached to the pipe or insulation and freely rest on a steel slide plate. Where there are high system temperatures and welding to piping is not desirable, then the Type 35 guide shall include a pipe cradle, welded to the guide structure and strapped securely to the pipe. The pipe shall be separated from the slide material by at least 4 inches, or by an amount adequate for the insulation, which ever is greater.

k. Except for Type 3, pipe hangers on horizontal insulated pipe shall be the size of the outside diameter of the insulation.

3.8.3 Not Used

3.9 PIPE SLEEVES

3.9.1 Pipe Passing Through Concrete or Masonry

Pipe passing through concrete or masonry walls or concrete floors or roofs shall be provided with pipe sleeves fitted into place at the time of construction. Sleeves shall not be installed in structural members except where indicated or approved. Rectangular and square openings shall be as detailed. Each sleeve shall extend through its respective wall, floor, or roof, and shall be cut flush with each surface. Unless otherwise indicated, sleeves shall provide a minimum of 1/4 inch annular space between bare pipe or insulation surface and sleeves. Sleeves in bearing walls, waterproofing membrane floors, and wet areas shall be steel pipe or cast iron pipe. Sleeves in nonbearing walls, floors, or ceilings may be steel pipe, cast iron pipe, or galvanized sheet metal with lock-type

longitudinal seam and of the metal thickness indicated. Except in pipe chases or interior walls, the annular space between pipe and sleeve or between jacket over insulation and sleeve in nonfire rated walls and floors shall be sealed as indicated and specified in Section 07900 JOINT SEALING. Penetrations in fire walls and floors shall be sealed in accordance with Section 07840 FIRESTOPPING.

3.9.2 Pipes Passing Through Waterproofing Membranes

Pipes passing through waterproofing membranes shall be installed through a 4 pound lead-flashing sleeve, a 16 ounce copper sleeve, or a 0.032 inch thick aluminum sleeve, each having an integral skirt or flange. Flashing sleeve shall be suitably formed, and the skirt or flange shall extend 8 inches or more from the pipe and shall be set over the roof or floor membrane in a troweled coating of bituminous cement. The flashing sleeve shall extend up the pipe a minimum of 2 inches above the highest flood level of the roof or a minimum of 10 inches above the roof, whichever is greater, or 10 inches above the floor. The annular space between the flashing sleeve and the bare pipe or between the flashing sleeve and the metal-jacket-covered insulation shall be sealed as indicated. At the Contractor's option, pipes up to and including 10 inches in diameter passing through roof or floor waterproofing membrane may be installed through a cast iron sleeve with caulking recess, anchor lugs, flashing clamp device, and pressure ring with brass bolts. Waterproofing membrane shall be clamped into place and sealant shall be placed in the caulking recess.

3.9.3 Mechanical Seal Assembly

In lieu of a waterproofing clamping flange and caulking and sealing of annular space between pipe and sleeve or conduit and sleeve, a modular mechanical type sealing assembly may be installed. The seals shall consist of interlocking synthetic rubber links shaped to continuously fill the annular space between the pipe/conduit and sleeve with corrosion protected carbon steel bolts, nuts, and pressure plates. The links shall be loosely assembled with bolts to form a continuous rubber belt around the pipe with a pressure plate under each bolt head and each nut. After the seal assembly is properly positioned in the sleeve, tightening of the bolts shall cause the rubber sealing elements to expand and provide a watertight seal between the pipe/conduit and the sleeve. Each seal assembly shall be sized as recommended by the manufacturer to fit the pipe/conduit and sleeve involved. The Contractor electing to use the modular mechanical type seals shall provide sleeves of the proper diameters.

3.9.4 Counterflashing Alternate

As an alternate to caulking and sealing the annular space between the pipe and flashing sleeve or metal-jacket-covered insulation and flashing sleeve, counterflashing may be by standard roof coupling for threaded pipe up to 6 inches in diameter; lead-flashing sleeve for dry vents and turning the sleeve down into the pipe to form a waterproof joint; or tack-welded or banded-metal rain shield round the pipe and sealing as indicated.

3.9.5 Waterproofing Clamping Flange

Pipe passing through wall waterproofing membrane shall be sleeved as specified. In addition, a waterproofing clamping flange shall be installed as indicated.

3.9.6 Fire Seal

Where pipes pass through fire walls, fire partitions, fire rated pipe chase walls or floors above grade, a fire seal shall be provided as specified in Section 07270 FIRESTOPPING.

3.9.7 Escutcheons

Escutcheons shall be provided at all finished surfaces where exposed piping, bare or covered, passes through floors, walls, or ceilings, except in boiler, utility, or equipment rooms. Escutcheons shall be fastened securely to pipe sleeves or to extensions of sleeves without any part of sleeves being visible. Where sleeves project slightly from floors, special deep-type escutcheons shall be used. Escutcheons shall be chromium-plated iron or chromium-plated brass, either one-piece or split pattern, held in place by internal spring tension or setscrew.

3.10 ANCHORS

Anchors shall be provided where necessary or indicated to localize expansion or prevent undue strain on piping. Anchors shall consist of heavy steel collars with lugs and bolts for clamping and attaching anchor braces, unless otherwise indicated. Anchor braces shall be installed using turnbuckles where required. Supports, anchors, or stays shall not be attached in places where construction will be damaged by installation operations or by the weight or expansion of the pipeline.

3.11 PIPE EXPANSION

The expansion of supply and return pipes shall be provided for by changes in the direction of the run of pipe, by expansion loops, or by expansion joints as indicated. Low temperature water and steam expansion joints may be one of the types specified.

3.11.1 Expansion Loops

Expansion loops shall provide adequate expansion of the main straight runs of the system within the stress limits specified in ASME B31.1. The loops shall be cold-sprung and installed where indicated. Pipe guides shall be provided as indicated.

3.11.2 Not Used

3.11.3 Not Used

3.11.4 Not Used

3.12 VALVES AND EQUIPMENT ACCESSORIES

3.12.1 Valves and Equipment

Valves shall be installed at the locations shown or specified, and where required for the proper functioning of the system as directed. Gate valves shall be used unless otherwise indicated, specified, or directed. Valves shall be installed with their stems horizontal to or above the main body of the valve. Valves used with ferrous piping shall have threaded or flanged ends and sweat-type connections for copper tubing. Valves shall be labeled with a corrosion-resistant tag.

3.12.2 Not Used

3.12.3 Thermometer Socket

A thermometer well shall be provided in each return line for each circuit in multicircuit systems.

3.12.4 Air Vents

Vents shall be installed where indicated, and on all high points and piping offsets where air can collect or pocket, and for system draining.

3.13 Not Used

3.14 UNIT HEATERS

Unit heaters shall be installed as indicated and in accordance with the manufacturer's instructions.

3.15 INSULATION

Thickness of insulation materials for piping and equipment and application shall be in accordance with Section 15080 THERMAL INSULATION FOR MECHANICAL SYSTEMS.

3.16 TESTING AND CLEANING

3.16.1 Pressure Testing

The Contractor shall notify the Contracting Officer 3 days before the tests are to be conducted. The tests shall be performed in the presence of the Contracting Officer. The Contractor shall furnish all instruments and personnel required for the tests. Electricity, steam, and water will be furnished by the Government. All test results shall be accepted before thermal insulation is installed. The entire low temperature heating system, including heat exchanger, radiators and fittings, shall be hydrostatically tested and proved tight under a pressure of 45 psig for a period of four hours.

3.16.2 Test of Backflow Prevention Assemblies

Backflow prevention assemblies shall be tested in accordance with Section 15400 PLUMBING, GENERAL PURPOSE.

3.16.3 Cleaning

After the hydrostatic and backflow prevention tests have been made and prior to the operating tests, the heat exchanger and piping shall be thoroughly cleaned by filling the system with a solution of 1 pound of caustic soda or 1 pound of trisodium phosphate per 50 gallons of water. Observe the proper safety precautions in the handling and use of these chemicals. The water shall be heated to approximately 150 degrees F, and the solution circulated in the system for a period of 48 hours, then drained and the system thoroughly flushed out with fresh water. Equipment shall be wiped clean, with all traces of oil, dust, dirt, or paint spots removed. The Contractor shall be responsible for maintaining the system in a clean condition until final acceptance. Bearings shall be lubricated with oil or grease as recommended by the manufacturer.

3.16.4 Not Used

3.17 TESTING, ADJUSTING AND BALANCING

Except as specified herein, testing, adjusting, and balancing shall be in accordance with Section 15990 TESTING, ADJUSTING, AND BALANCING OF HVAC SYSTEMS.

3.18 MANUFACTURER'S SERVICES

Services of a manufacturer's representative who is experienced in the installation, adjustment, and operation of the equipment specified shall be provided. The representative shall supervise the installation, adjustment, and testing of the equipment.

3.19 FRAMED INSTRUCTIONS

Framed instructions containing wiring and control diagrams under glass or in laminated plastic shall be posted where directed. Condensed operating instructions, prepared in typed form, shall be framed as specified above and posted beside the diagrams. The framed instructions shall be posted before acceptance testing of the system. Diagram shall include valve labels.

3.20 FIELD TRAINING

A field training course shall be provided for designated operating and maintenance staff members. Training shall be provided for a total period of 24 hours of normal working time and shall start after the system is functionally complete but prior to final acceptance tests. Field training shall cover all of the items contained in the approved operation and maintenance manuals.

-- End of Section --

SECTION TABLE OF CONTENTS

DIVISION 15 - MECHANICAL

SECTION 15653

AIR-CONDITIONING SYSTEM (UNITARY TYPE)

09/93

PART 1 GENERAL

1.1 REFERENCES
1.2 SUBMITTALS
1.3 Not Used
1.4 DELIVERY, STORAGE, AND HANDLING
1.5 PROJECT/SITE CONDITIONS
1.5.1 Verification of Dimensions
1.5.2 Drawings

PART 2 PRODUCTS

2.1 STANDARD COMMERCIAL PRODUCTS
2.2 NAMEPLATES
2.3 ELECTRICAL WORK
2.4 MISCELLANEOUS MATERIALS
2.4.1 Gaskets
2.4.2 Bolts and Nuts
2.4.3 Pipe Hangers, Inserts, and Supports
2.4.4 Escutcheons
2.4.5 Pressure and Vacuum Gauge
2.4.6 Temperature Gauges
2.4.6.1 Stem Cased-Glass
2.4.6.2 Not Used
2.4.6.3 Not used
2.4.6.4 Thermal Well
2.4.7 Unicellular Plastic Foam
2.4.8 Bird Screen
2.5 UNITARY EQUIPMENT, ROOM UNIT (PTAC's)_
2.5.1 Not Used
2.5.2 Packaged Terminal Unit
2.5.3 Compressor
2.5.4 Air-To-Refrigerant Coils
2.5.5 Fans
2.5.6 Air Filters
2.5.7 Not Used
2.5.8 Cabinet Construction
2.5.9 Wall Sleeve
2.5.10 Not Used
2.5.11 Unit Controls
2.5.12 Additional Units
2.6 Not Used
2.7 UNITARY EQUIPMENT, SPLIT SYSTEM
2.7.1 Air-to-Refrigerant Coil
2.7.2
2.7.3 Refrigeration Circuit

2.7.4 Unit Controls
2.8 Not Used
2.9 Not Used
2.10 REMOTE CONDENSER OR CONDENSING UNIT (ACCU-2.1, 3.1)
2.10.1 Air-Cooled Condenser
2.10.1.1 Connections
2.10.1.2 Head Pressure Control and Liquid Subcooling
2.10.1.3 Condensing Coil
2.10.1.4 Unit Controls
2.10.2 Not Used
2.10.3 Compressor
2.11 Not USed
2.12 SYSTEM COMPONENTS
2.12.1 Refrigerant and Oil
2.12.2 Fans
2.12.3 Primary/Supplemental Heating
2.12.3.1 Water Coil
2.12.4 Air Filters
2.12.4.1 Extended Surface Pleated Panel Filters
2.12.4.2 Not Used
2.12.4.3 Not Useds
2.12.5 Coil Frost Protection
2.12.6 Pressure Vessels
2.12.6.1 Not Used
2.12.6.2 Liquid Receiver
2.12.6.3 Oil Separator
2.12.6.4 Oil Reservoir
2.12.7 Not Used
2.12.8 Not Used
2.12.9 Cabinet Construction
2.12.9.1 Indoor Cabinet
2.12.9.2 Outdoor Cabinet
2.12.10 Not Used
2.13 Not Used
2.14 Not Used
2.15 Not Used
2.16
2.17 Not Used
2.18 Not Used
2.19 Not Used
2.20 Not used
2.21 REFRIGERANT SIGNS
2.21.1 Installation Identification
2.21.2 Controls and Piping Identification
2.22 INSULATION
2.22.1 Field Installed Insulation
2.22.2 Factory Installed Insulation
2.23 Not Used
2.24 TEMPERATURE CONTROLS
2.25 DUCTWORK COMPONENTS
2.25.1 Metal Ductwork
2.25.1.1 Transitions
2.25.1.2 Metallic Flexible Duct
2.25.1.3 Insulated Nonmetallic Flexible Duct Runouts
2.25.1.4 General Service Duct Connectors
2.25.2 Not Used
2.25.3 Ductwork Insulation
2.25.4 Ductwork Accessories
2.25.4.1 Duct Access Doors

2.25.4.2 Fire Dampers
2.25.4.3 Splitters and Manual Balancing Dampers
2.25.4.4 Air Deflectors and Branch Connections
2.25.5 Duct Sleeves, Framed Prepared Openings, Closure Collars
2.25.5.1 Duct Sleeves
2.25.5.2 Framed Prepared Openings
2.25.5.3 Closure Collars
2.25.6 Not Used
2.25.6.1
2.25.6.2
2.25.6.3
2.25.7 Diffusers, Registers, and Grilles
2.25.7.1 Diffusers
2.25.7.2 Registers and Grilles
2.25.8 Louvers
2.26
2.27 REFRIGERANT PIPING
2.27.1 Steel Pipe
2.27.2 Joints and Fittings, Steel Pipe
2.27.3 Steel Tubing
2.27.4 Joints and Fittings, Steel Tubing
2.27.5 Copper Tubing
2.27.6 Joints and Fittings, Copper Tubing
2.27.7 Valves
2.27.7.1 Refrigerant-Stop Valves
2.27.7.2 Check Valves
2.27.7.3 Liquid Solenoid Valves
2.27.7.4 Expansion Valves
2.27.7.5 Safety Relief Valve
2.27.7.6 Evaporator Pressure Regulators, Direct-Acting
2.27.7.7 Refrigerant Access Valves
2.27.8 Accessories
2.27.8.1 Filter Driers
2.27.8.2 Sight Glass and Liquid Level Indicator
2.27.8.3 Vibration Dampeners
2.27.8.4 Flexible Pipe Connectors
2.27.8.5 Strainers
2.27.8.6 Brazing Materials
2.28 DRAIN AND MISCELLANEOUS PIPING
2.29 FABRICATION
2.29.1 Factory Coating
2.29.2 Field Painting
2.29.2.1 Color Coding
2.29.2.2 Not Used

PART 3 EXECUTION

3.1 INSTALLATION
3.1.1 Equipment
3.1.2 Mechanical Room Ventilation
3.1.3 Building Surface Penetrations
3.1.3.1 Refrigerated Space
3.1.3.2 General Service Areas
3.1.3.3 Waterproof Penetrations
3.1.3.4 Fire-Rated Penetrations
3.1.3.5 Escutcheons
3.1.4 Access Panels
3.1.5 General Piping Installation
3.1.5.1 Brazed Joints

3.1.5.2 Not Used
3.1.5.3 Not Used
3.1.5.4 Not Used
3.1.5.5 Flared Connections
3.1.6 Not Used
3.1.7 Not Used
3.1.8 Refrigeration Piping
3.1.8.1 Directional Changes
3.1.8.2 Functional Requirements
3.1.8.3 Manual Valves
3.1.8.4 Expansion Valves
3.1.8.5 Valve Identification
3.1.8.6 Vibration Dampers
3.1.8.7 Strainers
3.1.8.8 Filter Dryer
3.1.8.9 Sight Glass
3.1.8.10 Flexible Connectors
3.1.9 Thermometers
3.1.10 Piping Supports
3.1.10.1 Not Used
3.1.10.2 Structural Attachments
3.1.11 Pipe Hangers, Inserts, and Supports
3.1.11.1 Hangers
3.1.11.2 Inserts
3.1.11.3 C-Clamps
3.1.11.4 Angle Attachments
3.1.11.5 Saddles and Shields
3.1.11.6 Horizontal Pipe Supports
3.1.11.7 Vertical Pipe Supports
3.1.11.8 Pipe Guides
3.1.11.9 Steel Slides
3.1.11.10 High Temperature Guides with Cradles
3.1.11.11 Multiple Pipe Runs
3.1.12 Pipe Alignment Guides
3.1.13 Pipe Anchors
3.1.14 Piping Identification
3.1.15 Metal Ductwork
3.1.16 Not Used
3.1.17 Not Used
3.1.18 Field Applied Insulation
3.1.19 Factory Applied Insulation
3.1.20 Framed Instructions
3.2 TESTS
3.2.1 Not Used
3.2.2 Refrigerant System
3.2.2.1 Preliminary Procedures
3.2.2.2 Pneumatic Test
3.2.2.3 Evacuation Test
3.2.2.4 System Charging and Startup Test
3.2.2.5 Refrigerant Leakage
3.2.2.6 Contractor's Responsibility
3.2.3 Ductwork Leak Tests
3.2.4 Not Used
3.2.5 Not Used
3.2.6 System Performance Tests
3.3 INSPECTIONS
3.4 CLEANING AND ADJUSTING
3.4.1 Piping
3.4.2 Ductwork

3.4.3 Equipment
3.4.4 Testing, Adjusting, and Balancing
3.5 DEMONSTRATIONS

-- End of Section Table of Contents --

SECTION 15653

AIR-CONDITIONING SYSTEM (UNITARY TYPE)
09/93

PART 1 GENERAL

1.1 REFERENCES

The publications listed below form a part of this specification to the extent referenced. The publications are referred to in the text by basic designation only.

AIR CONDITIONING AND REFRIGERATION INSTITUTE (ARI)

ARI ANSI/ARI 210/240	(1994) Unitary Air-Conditioning and Air-Source Heat Pump Equipment
ARI ARI 310/380/CSA C744	(1993) Packaged Terminal Air-Conditioners and Heat Pumps
ARI 350	(1986) Sound Rating of Non-Ducted Indoor Air-Conditioning Equipment
ARI ANSI/ARI 410	(1991) Forced-Circulation Air-Cooling and Air-Heating Coils
ARI 460	(1994) Remote Mechanical-Draft Air-Cooled Refrigerant Condensers
ARI 495	(1993) Refrigerant Liquid Receivers
ARI 700	(1995; Apx C) Specifications for Fluorocarbon and Other Refrigerants
ARI ANSI/ARI 710	(1995) Liquid-Line Driers
ARI ANSI/ARI 720	(1997) Refrigerant Access Valves and Hose Connectors
ARI 750	(1994) Thermostatic Refrigerant Expansion Valves
ARI 760	(1994) Solenoid Valves for Use with Volatile Refrigerants

AIR DIFFUSION COUNCIL (ADC)

ADC 1062:GRD	(1984) Test Codes for Grilles, Registers and Diffusers

AMERICAN NATIONAL STANDARDS INSTITUTE (ANSI)

ANSI A13.1	(1981; R 1993) Scheme for the

Identification of Piping Systems

AMERICAN SOCIETY FOR TESTING AND MATERIALS (ASTM)

ASTM A 53	(1997) Pipe, Steel, Black and Hot-Dipped, Zinc-Coated, Welded and Seamless
ASTM A 307	(1994) Carbon Steel Bolts and Studs, 60 000 PSI Tensile Strength
ASTM A 334/A 334M	(1996) Seamless and Welded Carbon and Alloy-Steel Tubes for Low-Temperature Service
ASTM A 653/A 653M	(1997) Steel Sheet, Zinc-Coated (Galvanized) or Zinc-Iron Alloy-Coated (Galvannealed) by the Hot-Dip Process
ASTM B 117	(1997) Operating Salt Spray (Fog) Apparatus
ASTM B 280	(1995a) Seamless Copper Tube for Air Conditioning and Refrigeration Field Service
ASTM C 534	(1994) Preformed Flexible Elastomeric Cellular Thermal Insulation in Sheet and Tubular Form
ASTM C 1071	(1991) Thermal and Acoustical Insulation (Glass Fiber, Duct Lining Material)
ASTM D 520	(1984; R 1995) Zinc Dust Pigment
ASTM E 437	(1992) Industrial Wire Cloth and Screens (Square Opening Series)
ASTM F 104	(1993) Nonmetallic Gasket Materials

AMERICAN SOCIETY OF HEATING, REFRIGERATING AND AIR-CONDITIONING ENGINEERS (ASHRAE)

ASHRAE 15	(1994) Safety Code for Mechanical Refrigeration
ASHRAE 34	(1992; Addenda a-j) Number Designation and Safety Classification of Refrigerants
ASHRAE 52.1	(1992) Gravimetric and Dust-Spot Procedures for Testing Air-Cleaning Devices Used in General Ventilation for Removing Particulate Matter
ASHRAE 62	Ventilation for acceptable indoor air quality.

ASME INTERNATIONAL (ASME)

ASME B1.20.1	(1983; R 1992) Pipe Threads, General Purpose (Inch)

ASME B31.5	(1992; B31.5a) Refrigeration Piping
ASME B40.1	(1991) Gauges - Pressure Indicating Dial Type - Elastic Element
ASME BPV VIII Div 1	(1998) Boiler and Pressure Vessel Code; Section VIII, Pressure Vessels Division 1 - Basic Coverage
ASME BPV IX	(1998) Boiler and Pressure Vessel Code; Section IX, Welding and Brazing Qualifications

AMERICAN WELDING SOCIETY (AWS)

AWS Brazing Hdbk	(1991) Brazing Handbook
AWS A5.8	(1992) Filler Metals for Brazing and Braze Welding

MANUFACTURERS STANDARDIZATION SOCIETY OF THE VALVE AND FITTINGS INDUSTRY (MSS)

MSS SP-58	(1993) Pipe Hangers and Supports - Materials, Design and Manufacture
MSS SP-69	(1996) Pipe Hangers and Supports - Selection and Application

NATIONAL ELECTRICAL MANUFACTURERS ASSOCIATION (NEMA)

NEMA ICS 6	(1993) Industrial Control and Systems, Enclosures
NEMA MG 1	(1993; Rev 1; Rev 2; Rev 3) Motors and Generators
NEMA MG 2	(1989) Safety Standard for Construction and Guide for Selection, Installation, and Use of Electric Motors and Generators

NATIONAL FIRE PROTECTION ASSOCIATION (NFPA)

NFPA 70	(1999) National Electrical Code
NFPA 90A	(1996) Installation of Air Conditioning and Ventilating Systems

SHEET METAL AND AIR CONDITIONING CONTRACTORS' NATIONAL ASSOCIATION (SMACNA)

SMACNA Install Fire Damp HVAC	(1992) Fire, Smoke and Radiation Damper Installation Guide for HVAC Systems
SMACNA TAB HVAC Sys	(1995; Addenda Nov 1997) HVAC Duct Construction Standards - Metal and Flexible
SMACNA Leakage Test Mnl	(1985) HVAC Air Duct Leakage Test Manual

UNDERWRITERS LABORATORIES (UL)

UL 181	(1996; Rev Oct 1996) Factory-Made Air Ducts and Air Connectors
UL 207	(1993; Rev thru Oct 1997) Refrigerant-Containing Components and Accessories, Nonelectrical
UL 214	(1997) Tests for Flame-Propagation of Fabrics and Films
UL 555	(1995) Fire Dampers
UL 586	(1996) High-Efficiency, Particulate, Air Filter Units
UL 900	(1994; Rev thru Apr 1997) Test Performance of Air Filter Units
UL 1995	(1995; Rev thru Feb 97) Heating and Cooling Equipment
UL Bld Mat Dir	(1998) Building Materials Directory
UL Elec Const Dir	(1997; Supple) Electrical Construction Equipment Directory
UL Fire Resist Dir	(1997) Fire Resistance Directory (2 Vol.)

1.2 SUBMITTALS

Government approval is required for submittals with a "GA" designation; submittals having an "FIO" designation are for information only. The following shall be submitted in accordance with Section 01330 SUBMITTAL PROCEDURES:

SD-01 Data

Air-Conditioning System; FIO.

Manufacturer's standard catalog data, prior to the purchase or installation of a particular component, shall be highlighted to show brand name, model number, size, options, performance charts and curves, etc. in sufficient detail to demonstrate compliance with contract requirements. Data shall be submitted for each specified component. Data shall include manufacturer's recommended installation instructions and procedures. If vibration isolation is specified for a unit, vibration isolator literature shall be included containing catalog cuts and certification that the isolation characteristics of the isolators provided meet the manufacturer's recommendations.

Spare Parts Data; GA1.

Spare parts data for each different item of equipment specified, after approval of detail drawings and not later than 1 month prior to the date of

beneficial occupancy. The data shall include a complete list of parts and supplies, with current unit prices and source of supply, a recommended spare parts list for 1 year of operation, and a list of the parts recommended by the manufacturer to be replaced on a routine basis.

SD-06 Instructions

Framed Instructions; FIO.

Framed instructions for posting, at least 2 weeks prior to construction completion.

SD-07 Schedules

Tests; FIO.

A letter, at least 10 working days in advance of each tests, advising the Contracting Officer of the test. Individual letters shall be submitted for refrigerant system, ductwork leak tests and the system performance tests. Each letter shall identify the date, time, and location for each test.

Demonstrations; GA1.

A letter, at least 14 working days prior to the date of the proposed training course, which identifies the date, time, and location for the training.

SD-08 Statements

Qualifications; FIO.

A letter listing the qualifying procedures for each welder. The letter shall include supporting data such as test procedures used, what was tested etc., and a list of the names of qualified welders and their identification symbols.

Verification of Dimensions; FIO.

A letter, at least 2 weeks prior to beginning construction, including the date the site was visited, conformation of existing conditions, and any discrepancies found.

SD-09 Reports

Tests; GA.

Six copies of each test containing the information described below in bound 8-1/2 x 11 inch booklets. Individual reports shall be submitted for the c refrigerant system, ductwork leak tests.

(1) The date the tests were performed.

(2) A list of equipment used, with calibration certifications.

(3) Initial test summaries.

(4) Repairs/adjustments performed.

(5) Final test results.

System Performance Tests; GA1.

Six copies of the report shall be provided in bound 8-1/2 x 11 inch booklets. The report shall document compliance with the specified performance criteria upon completion and testing of the system. The report shall indicate the number of days covered by the tests and any conclusions as to the adequacy of the system. The report shall also include the following information and shall be taken at least three different times at outside dry-bulb temperatures that are at least 5 degrees F apart:

(1) Date and outside weather conditions.

(2) The load on the system based on the following:

(a) The refrigerant used in the system.
(b) Condensing temperature and pressure.
(c) Suction temperature and pressure.
(d) Ambient, condensing and coolant temperatures
(e) Running current, voltage and proper phase sequence for each phase of all motors.

(3) The actual on-site setting of operating and safety controls.

(4) Thermostatic expansion valve superheat - value as determined by field test

(5) Subcooling

(6) High and low refrigerant temperature switch set-points

(7) Low oil pressure switch set-point

(8) Defrost system timer and thermostat set-points

(9) Moisture content

(10) Capacity control set-points

(11) Field data and adjustments which affect unit performance and energy consumption.

(12) Field adjustments and settings which were not permanently marked as an integral part of a device.

Inspections; FIO.

Test report, at the completion of one year of service, in bound 8-1/2 x 11 inch booklets. The report shall identify the condition of the cooling tower and condenser. The report shall also include a comparison of the condition of the cooling tower and condenser with the manufacturer's recommended operating conditions.

SD-13 Certificates

Air-Conditioning System; GA1.

Where the system, components, or equipment are specified to comply with requirements of ARI, ASHRAE, ASME, or UL, proof of such compliance shall be provided. The label or listing of the specified agency shall be acceptable evidence. In lieu of the label or listing, a written certificate from an approved, nationally recognized testing organization equipped to perform such services, stating that the items have been tested and conform to the requirements and testing methods of the specified agency may be submitted. When performance requirements of this project's drawings and specifications vary from standard ARI rating conditions, computer printouts, catalog, or other application data certified by ARI or a nationally recognized laboratory as described above shall be included. If ARI does not have a current certification program that encompasses such application data, the manufacturer may self certify that his application data complies with project performance requirements in accordance with the specified test standards.

Service Organizations; FIO.

A certified list of qualified permanent service organizations for support of the equipment which includes their addresses and qualifications. The service organizations shall be reasonably convenient to the equipment installation and be able to render satisfactory service to the equipment on a regular and emergency basis during the warranty period of the contract.

SD-19 Operation and Maintenance Manuals

Operation Manual; FIO.

Six complete copies of an operation manual in bound 8-1/2 x 11 inch booklets listing step-by-step procedures required for system startup, operation, and shutdown. The booklets shall include the manufacturer's name, model number, and parts list. The manuals shall include the manufacturer's name, model number, service manual, and a brief description of all equipment and their basic operating features.

Maintenance Manual; FIO.

Six complete copies of maintenance manual in bound 8-1/2 x 11 inch booklets listing routine maintenance procedures, possible breakdowns and repairs, and a trouble shooting guide. The manuals shall include piping and equipment layouts and simplified wiring and control diagrams of the system as installed.

1.3 Not Used

1.4 DELIVERY, STORAGE, AND HANDLING

Stored items shall be protected from the weather and contamination. Proper protection and care of all material before, during, and after installation shall be the Contractor's responsibility. Any materials found to be damaged shall be replaced at the Contractor's expense. During installation, piping and similar openings shall be capped to keep out dirt and other foreign matter.

1.5 PROJECT/SITE CONDITIONS

1.5.1 Verification of Dimensions

The Contractor shall become familiar with all details of the work, verify dimensions in the field, and advise the Contracting Officer of any discrepancy before performing any work.

1.5.2 Drawings

Because of the small scale of the drawings, it is not possible to indicate all offsets, fittings, and accessories that may be required. The Contractor shall carefully investigate the plumbing, fire protection, electrical, structural and finish conditions that would affect the work to be performed and arrange such work accordingly, furnishing required offsets, fittings, and accessories to meet such conditions. Equipment, ductwork, and piping arrangements shall fit into space allotted and allow adequate acceptable clearances for installation, replacement, entry, servicing, and maintenance.

PART 2 PRODUCTS

2.1 STANDARD COMMERCIAL PRODUCTS

Materials and equipment shall be standard products of a manufacturer regularly engaged in the manufacturing of such products, which are of a similar material, design and workmanship. The standard products shall have been in satisfactory commercial or industrial use for 2 years prior to bid opening. The 2 year use shall include applications of equipment and materials under similar circumstances and of similar size. The 2 years experience shall be satisfactorily completed by a product which has been sold or is offered for sale on the commercial market through advertisements, manufacturer's catalogs, or brochures. Products having less than a 2 year field service record shall be acceptable if a certified record of satisfactory field operation, for not less than 6000 hours exclusive of the manufacturer's factory tests, can be shown. Products shall be supported by a service organization. System components shall be environmentally suitable for the indicated locations.

2.2 NAMEPLATES

Major equipment including compressors, condensers, receivers, heat exchanges, fans, cooling towers, pumps and motors shall have the manufacturer's name, address, type or style, model or serial number, and catalog number on a plate secured to the item of equipment. Plates shall be durable and legible throughout equipment life and made of stainless steel]. Plates shall be fixed in prominent locations with nonferrous screws or bolts.

2.3 ELECTRICAL WORK

Electrical equipment, motors, motor efficiencies, and wiring shall be in accordance with Section 16415 ELECTRICAL WORK, INTERIOR. Electrical motor driven equipment specified shall be provided complete with motors, motor starters, and controls. Electrical characteristics shall be as shown, and unless otherwise indicated, all motors of 1 horsepower and above with open, dripproof, totally enclosed, or explosion proof fan cooled enclosures, shall be high efficiency type. Field wiring shall be in accordance with manufacturer's instructions. Each motor shall conform to

NEMA MG 1 and NEMA MG 2 and be of sufficient size to drive the equipment at the specified capacity without exceeding the nameplate rating of the motor. Motors shall be continuous duty with the enclosure specified. Motor starters shall be provided complete with thermal overload protection and other appurtenances necessary for the motor control indicated. Motors shall be furnished with a magnetic across-the-line or reduced voltage type starter as required by the manufacturer. Motor duty requirements shall allow for maximum frequency start-stop operation and minimum encountered interval between start and stop. Motors shall be sized for the applicable loads. Motor torque shall be capable of accelerating the connected load within 20 seconds with 80 percent of the rated voltage maintained at motor terminals during one starting period. Motor bearings shall be fitted with grease supply fittings and grease relief to outside of enclosure. Manual or automatic control and protective or signal devices required for the operation specified and any control wiring required for controls and devices specified, but not shown, shall be provided.

2.4 MISCELLANEOUS MATERIALS

2.4.1 Gaskets

Gaskets shall conform to ASTM F 104 - classification for compressed sheet with nitrile binder and acrylic fibers for maximum 700 degrees F service.

2.4.2 Bolts and Nuts

Bolts and nuts, except as required for piping applications, shall be in accordance with ASTM A 307. The bolt head shall be marked to identify the manufacturer and the standard with which the bolt complies in accordance with ASTM A 307.

2.4.3 Pipe Hangers, Inserts, and Supports

Pipe hangers, inserts, and supports shall conform to MSS SP-58 and MSS SP-69.

2.4.4 Escutcheons

Escutcheons shall be chromium-plated iron or chromium-plated brass, either one piece or split pattern, held in place by internal spring tension or set screws.

2.4.5 Pressure and Vacuum Gauge

Gauge shall conform to ASME B40.1, Class 1, 2, or 3, Style X, Type I or III as required, 4-1/2 inches in diameter with phenolic or metal case. Each gauge range shall be selected so that at normal operating pressure, the needle is within the middle-third of the range.

2.4.6 Temperature Gauges

Industrial duty thermometers shall be provided for the required temperature range. Thermometers shall have Fahrenheit scale in 2 degree graduations scale on a white face. The pointer shall be adjustable.

2.4.6.1 Stem Cased-Glass

Stem cased-glass case shall be polished stainless steel or cast aluminum, 9 inches long, with clear acrylic lens, and non-mercury filled glass tube.

2.4.6.2 Not Used

2.4.6.3 Not used

2.4.6.4 Thermal Well

Thermal well shall be identical size, 1/2 or 3/4 inch NPT connection, brass or stainless steel. Where test wells are indicated, provide captive plug-fitted type 1/2 inch NPT connection suitable for use with either engraved stem or standard separable socket thermometer or thermostat. Extended neck thermal wells shall be of sufficient length to clear insulation thickness by 1 inch.

2.4.7 Unicellular Plastic Foam

Unicellular plastic foam shall be in accordance with ASTM C 534, Form T, except that D-Factor shall not exceed 0.28 at 75 degrees F mean temperature.

2.4.8 Bird Screen

Screen shall be in accordance with ASTM E 437, Type 1, Class 1, 2 by 2 mesh, 0.063 inch diameter aluminum wire or 0.031 inch diameter stainless steel wire.

2.5 UNITARY EQUIPMENT, ROOM UNIT (PTAC's)_

2.5.1 Not Used

2.5.2 Packaged Terminal Unit

Not withstanding Section 00700 CONTRACT CLAUSES FAR 52.236-5 Material and Workmanship, the packaged terminal units shall be manufactured by McQuay in order to be fully compatible with the existing packaged terminal units in Phase 2 Lodging Facility. No other product will be acceptable. The Competition Advocate authorities sole source procurement. Unit shall be a through-the-wall mounted, heavy-duty commercial grade, factory assembled and precharged air-conditioner unit. Unit shall be in accordance with ARI ARI 310/380/CSA C744 and UL 1995. Units shall be removable from inside the building for servicing without removing the outside cabinet. Unit shall have a noise rating in accordance with ARI 350 and not exceed 7 bels while the entire unit is operating at any fan or compressor speed. An outdoor coil temperature sensor shall be provided to guard against coil freeze-up by either switching to supplemental heat only, or by cycling the compressor to defrost the coil.

2.5.3 Compressor

Compressor shall be hermetically sealed reciprocating, rotary, or scroll type. Compressor shall be fitted with permanent split capacitor motor, overload protection, and vibration isolators. Compressor shall be protected against high discharge pressure, loss of charge, low voltage, and short cycling.

2.5.4 Air-To-Refrigerant Coils

Evaporator and condenser coils shall have copper tubes of 3/8 inch minimum diameter with copper or aluminum fins that are mechanically bonded or soldered to the tubes. Casing shall be galvanized steel or aluminum.

Contact of dissimilar metals shall be avoided. Coils shall be tested in accordance with ASHRAE 15 at the factory and be suitable for the working pressure of the installed system. Each coil shall be dehydrated and sealed after testing and prior to evaluation and charging. Each unit shall be provided with a factory operating charge of refrigerant and oil or a holding charge. Unit shipped with a holding charge shall be field charged. A condensate removal system shall be provided.

2.5.5 Fans

Indoor and outdoor fans shall be the centrifugal, direct driven type. Fans shall be statically and dynamically balanced. Outdoor fan shall be designed so that condensate will evaporate without drip, splash, or spray on building exterior. Indoor fan shall be provided with a minimum two-speed motor with built-in overload protection. Fan motors shall be the inherently protected, permanent split-capacitor type.

2.5.6 Air Filters

Filters shall be of the sectional or panel cleanable type and be capable of filtering the entire air supply.

2.5.7 Not Used

2.5.8 Cabinet Construction

Cabinet shall be free of visible fasteners, sharp protuberances and edges. Enclosure sheet metal shall be a minimum of 18 gauge steel with a protective coating. Face panels shall be removable and shall provide full access to unit appurtenances. Access to controls shall be without removal of the face panel. Conditioned air shall discharge through adjustable louvers. Cabinet shall be thermally and acoustically insulated with materials which conform to NFPA 90A. Units shall be furnished with a prewired subbase. Subbase shall have leveling screws with provisions for remote unit control. Subbase shall be of 18 gauge galvanized steel construction with a protective coating to match that of the room cabinet. Paint and finishes shall comply with the requirements specified in paragraph "Factory Coating".

2.5.9 Wall Sleeve

Louver shall be stormproof type, constructed of anodized, stamped or extruded aluminum. Sleeve shall be a water and airtight completely insulated assembly, with weather-resistant protective coating.

2.5.10 Not Used

2.5.11 Unit Controls

Controls shall include an on-off switch, high and low selector switch for both the heating and cooling mode, multiple speed fan cooling and heating mode, room air fan switch, outside air damper control, and an adjustable cooling and heating thermostat. Function and temperature controls shall be remotely mounted as indicated or as accepted by the Contracting Officer.

Units shall be equipped with terminals for setback/set-up control through Building Automation System (BAS).

2.5.12 Additional Units

In addition to the units shown on plan, the Contractor shall provide the government with five additional PTAC units, one for each size scheduled, to be used as stand-by replacement units.

2.6 Not Used

2.7 UNITARY EQUIPMENT, SPLIT SYSTEM

Not withstanding Section 00700 CONTRACT CLAUSES FAR 52.236-5 Material and Workmanship,ACCU-2.1 and ACCU-2.3 shall be manufactured by McQuay to be consistent with Phase 2 Lodging Facility. No other product will be acceptable. The Competition Advocate authorities sole source procurement. Unit shall be an air-cooled, split system which employs a remote condensing unit, a separate indoor unit, and interconnecting refrigerant piping. Unit shall be the air-conditioning type conforming to applicable Underwriters Laboratories (UL) standards including UL 1995. Unit shall be rated in accordance with ARI ANSI/ARI 210/240 [. Unit shall be provided with necessary fans, air filters, coil frost protection,liquid receiver, supplemental heat, and cabinet construction as specified in paragraph "System Components". The remote unit shall be as specified in paragraph REMOTE CONDENSER OR CONDENSING UNIT. Evaporator or supply fans shall be double-width, double inlet, forward curved, backward inclined, or airfoil blade, centrifugal scroll type. Condenser or outdoor fans shall be the manufacturer's standard for the unit specified and may be either propeller or centrifugal scroll type. Fan and condenser motors shall have totally enclosed enclosures.

2.7.1 Air-to-Refrigerant Coil

Coils shall have nonferrous tubes of 3/8 inch minimum diameter with copper or aluminum fins that are mechanically bonded or soldered to the tubes. Casing shall be galvanized steel or aluminum. Contact of dissimilar metals shall be avoided. Coils shall be tested in accordance with ASHRAE 15 at the factory and be suitable for the working pressure of the installed system. Each coil shall be dehydrated and sealed after testing and prior to evaluation and charging. Each unit shall be provided with a factory operating charge of refrigerant and oil or a holding charge. Unit shipped with a holding charge shall be field charged. Separate expansion devices shall be provided for each compressor circuit.

2.7.2 Not Used.

2.7.3 Refrigeration Circuit

Refrigerant-containing components shall comply with ASHRAE 15 and be factory tested, cleaned, dehydrated, charged, and sealed. Refrigerant charging valves and connections, and pumpdown valves shall be provided for each circuit. Filter-drier shall be provided in each liquid line and be reversible-flow type. Refrigerant flow control devices shall be an adjustable superheat thermostatic expansion valve with external equalizer matched to coil, capillary or thermostatic control, and a pilot solenoid controlled, leak-tight, four-way refrigerant flow reversing valve. A refrigerant suction line thermostatic control shall be provided to prevent freeze-up in event of loss of water flow during heating cycle.

2.7.4 Unit Controls

Unit shall be internally prewired with a 24 volt control circuit powered by an internal transformer. Terminal blocks shall be provided for power

wiring and external control wiring. Unit shall have cutoffs for high and low pressure, supply fan failure, and safety interlocks on all service panels. Head pressure controls shall sustain unit operation with ambient temperature of 95 degrees F. Adjustable-cycle timers shall prevent short-cycling. Multiple compressors shall be staged by means of a time delay. Unit shall be internally protected by fuses or a circuit breaker in accordance with UL 1995.

2.8 Not Used

2.9 Not Used

2.10 REMOTE CONDENSER OR CONDENSING UNIT (ACCU-2.1, 3.1)

. Each remote condenser coil shall be fitted with a manual isolation valve and an access valve on the coil side. Saturated refrigerant condensing temperature shall not exceed 120 degrees F at 95 degrees F ambient. Unit shall be provided with low ambient condenser controls to ensure proper operation in an ambient temperature of 0 degrees F. Fan and cabinet construction shall be provided as specified in paragraph "System Components". Fan and condenser motors shall have totally enclosed enclosures.

2.10.1 Air-Cooled Condenser

Unit shall be rated in accordance with ARI 460 and conform to the requirements of UL 1995. Unit shall be factory fabricated, tested, packaged, and self-contained. Unit shall be complete with casing, propeller or centrifugal type fans, heat rejection coils, connecting piping and wiring, and all necessary appurtenances.

2.10.1.1 Connections

Interconnecting refrigeration piping, electrical power, and control wiring between the condensing unit and the indoor unit shall be provided as required and as indicated. Electrical and refrigeration piping terminal connections between condensing unit and evaporator units shall be provided.

2.10.1.2 Head Pressure Control and Liquid Subcooling

Low ambient control for multi-circuited units serving more than one evaporator coil shall provide independent condenser pressure controls for each refrigerant circuit. Controls shall be set to produce a minimum of 95 degrees F saturated refrigerant condensing temperature. Unit shall be provided with a liquid subcooling circuit which shall ensure proper liquid refrigerant flow to the expansion device over the specified application range of the condenser. Unit shall be provide with manufacturer's standard liquid subcooling. Subcooling circuit shall be liquid sealed.

2.10.1.3 Condensing Coil

Coils shall have nonferrous tubes of 3/8 inch minimum diameter with copper or aluminum fins that are mechanically bonded or soldered to the tubes. Casing shall be galvanized steel or aluminum. Contact of dissimilar metals shall be avoided. Coils shall be tested in accordance with ASHRAE 15 at the factory and be suitable for the working pressure of the installed system. Each coil shall be dehydrated and sealed after testing and prior to evaluation and charging. Each unit shall be provided with a factory operating charge of refrigerant and oil or a holding charge. Unit shipped

with a holding charge shall be field charged. Separate expansion devices shall be provided for each compressor circuit.

2.10.1.4 Unit Controls

The control system shall be complete with required accessories for regulating condenser pressure by fan cycling, solid-state variable fan speed, modulating condenser coil or fan dampers, flooding the condenser, or a combination of the above. Unit mounted control panels or enclosures shall be constructed in accordance with applicable requirements of NFPA 70 and housed in NEMA ICS 6, Class 1 or 3A enclosures. Controls shall include control transformer, fan motor starters,time delay start-up, overload protective devices, interface with local and remote components, and intercomponent wiring to terminal block points.

2.10.2 Not Used

2.10.3 Compressor

Compressor shall be direct drive, semi-hermetic or hermetic reciprocating, or scroll type capable of operating at partial load conditions. Compressor shall be capable of continuous operation down to the lowest step of unloading as specified. Units 120,000 Btuh and larger shall be provided with capacity reduction devices to produce automatic capacity reduction of at least 50 percent. If standard with the manufacturer, two or more compressors may be used in lieu of a single compressor with unloading capabilities, in which case the compressors will operate in sequence, and each compressor shall have an independent refrigeration circuit through the condenser and evaporator. Each compressor shall start in the unloaded position. Each compressor shall be provided with vibration isolators, crankcase heater, thermal overloads, and high and low pressure safety cutoffs and protection against short cycling.

2.11 Not USed

2.12 SYSTEM COMPONENTS

2.12.1 Refrigerant and Oil

Refrigerant shall be one of the fluorocarbon gases. Refrigerants shall have number designations and safety classifications in accordance with ASHRAE 34. Refrigerants shall meet the requirements of ARI 700 as a minimum. Refrigerants shall have an Ozone Depletion Potential (ODP) of less than or equal to 0.05. Contractor shall provide and install a complete charge of refrigerant for the installed system as recommended by the manufacturer. Except for factory sealed units, two complete charges of lubricating oil for each compressor crankcase shall be furnished. One charge shall be used during the system performance testing period. Following the satisfactory completion of the performance testing, the oil shall be drained and replaced with a second charge. Lubricating oil shall be of a type and grade recommended by the manufacturer for each compressor. Where color leak indicator dye is incorporated, charge shall be in accordance with manufacturer's recommendation.

2.12.2 Fans

Fan wheel shafts shall be supported by either maintenance-accessible lubricated antifriction block-type bearings, or permanently lubricated ball bearings. Unit fans shall be selected to produce the cfm required at the

fan total pressure. Motor starters, if applicable, shall be magnetic across-the-line type with a totally enclosed enclosure. Thermal overload protection shall be of the manual or automatic-reset type. Fan wheels or propellers shall be constructed of aluminum or galvanized steel. Centrifugal fan wheel housings shall be of galvanized steel, and both centrifugal and propeller fan casings shall be constructed of aluminum or galvanized steel. Steel elements of fans, except fan shafts, shall be hot-dipped galvanized after fabrication or fabricated of mill galvanized steel. Mill-galvanized steel surfaces and edges damaged or cut during fabrication by forming, punching, drilling, welding, or cutting shall be recoated with an approved zinc-rich compound. Fan wheels or propellers shall be statically and dynamically balanced. Forward curved fan wheels shall be limited to 25 inches. Direct-drive fan motors shall be of the multiple-speed variety. Belt-driven fans shall have adjustable sheaves to provide not less than 20 percent fan-speed adjustment. The sheave size shall be selected so that the fan speed at the approximate midpoint of the sheave adjustment will produce the specified air quantity. Centrifugal scroll-type fans shall be provided with streamlined orifice inlet and V-belt drive. Each drive will be independent of any other drive. Propeller fans shall be direct-drive drive type with fixed pitch blades. V-belt driven fans shall be mounted on a corrosion protected drive shaft supported by either maintenance-accessible lubricated antifriction block-type bearings, or permanently lubricated ball bearings. Each drive will be independent of any other drive. Drive bearings shall be protected with water slingers or shields. V-belt drives shall be fitted with guards where exposed to contact by personnel and fixed pitchsheaves.

2.12.3 Primary/Supplemental Heating

2.12.3.1 Water Coil

Coil shall conform to the provisions of ARI ANSI/ARI 410. Coil shall be fin-and-tube type constructed of seamless copper tubes and aluminumor copper fins mechanically bonded or soldered to tubes. Headers shall be constructed of cast iron, welded steel or copper. Coil shall be constructed to float within the casing to allow free expansion and contraction of tubing. Casing and tube support sheets shall not be lighter than 16 gauge galvanized steel formed to provide structural strength. When required, multiple tube supports shall be provided to prevent tube sag. Coil shall be circuited for suitable water velocity without excessive pressure drop and properly pitched for drainage where required or indicated. Each coil shall be tested at the factory under water at not less than 300 psi air pressure, tested hydrostatically after assembly of the unit and proved tight under a gauge pressure of 200 psi. Coil shall be suitable for use with water up to 250 degrees F. Coil shall allow complete coil drainage with a pitch of not less than 1/8 inch per foot slope to drain.

2.12.4 Air Filters

Air filters shall be listed in accordance with requirements of UL 900, except high efficiency particulate air filters of 99.97 percent efficiency by the DOP Test Method shall be as listed under the label service and shall meet the requirements of UL 586.

2.12.4.1 Extended Surface Pleated Panel Filters

Filters shall be 2 inch depth sectional type of the size indicated and shall have an average efficiency of 25 to 30 percent when tested in

accordance with ASHRAE 52.1. Initial resistance at 500 feet per minute will not exceed 0.36 inches water gauge. Filters shall be UL Class 2. Media shall be nonwoven cotton and synthetic fiber mat. A wire support grid bonded to the media shall be attached to a moisture resistant fiberboard frame. Four edges of the filter media shall be bonded to the inside of the frame to prevent air bypass and increase rigidity.

2.12.4.2 Not Used

2.12.4.3 Not Useds

2.12.5 Coil Frost Protection

Each circuit shall be provided with a coil frost protection system which is a manufacturer's standard. The coil frost protection system shall use a temperature sensor in the suction line of the compressor to shut the compressor off when coil frosting occurs. Timers shall be used to prevent the compressor from rapid cycling.

2.12.6 Pressure Vessels

Pressure vessels shall conform to ASME BPV VIII Div 1 or UL 207, as applicable for maximum and minimum pressure or temperature encountered. Where referenced publications do not apply, pressure components shall be tested at 1-1/2 times design working pressure. Refrigerant wetted carbon steel surfaces shall be pickled or abrasive blasted free of mill scale, cleaned, dried, charged, and sealed.

2.12.6.1 Not Used

2.12.6.2 Liquid Receiver

A liquid receiver shall be provided when a system's condenser or compressor does not contain a refrigerant storage capacity of at least 20 percent in excess of a fully charged system. Receiver shall be designed, filled, and rated in accordance with the recommendations of ARI 495, except as modified herein. Receiver shall be fitted to include an inlet connection; an outlet drop pipe with oil seal and oil drain where necessary; two bull's-eye liquid level sight glass in same vertical plane, 90 degrees apart and perpendicular to axis of receiver or external gauge glass with metal guard and automatic stop valves; thermal well for thermostat;float switch column; and purge, charge, equalizing, pressurizing, plugged drain and service valves on the inlet and outlet connections. Receiver shall be provided with a relief valve of capacity and setting in accordance with ASHRAE 15.

2.12.6.3 Oil Separator

Separator shall be the high efficiency type and be provided with removable flanged head for ease in removing float assembly and removable screen cartridge assembly. Pressure drop through a separator shall not exceed 10 psi during the removal of hot gas entrained oil. Connections to compressor shall be as recommended by the compressor manufacturer. Separator shall be provided with an oil float valve assembly or needle valve and orifice assembly, drain line shutoff valve, sight glass, filter for removal of all particulate sized 10 microns and larger,thermometer and low temperature thermostat fitted to thermal well,immersion heater, [external float valve fitted with three-valve bypass, and strainer.

2.12.6.4 Oil Reservoir

Reservoir capacity shall equal one charge of all connected compressors. Reservoir shall be provided with an external liquid gauge glass, plugged drain, and isolation valves. Vent piping between the reservoir and the suction header shall be provided with a 5 psi pressure differential relief valve. Reservoir shall be provided with the manufacturer's standard filter on the oil return line to the oil level regulators.

2.12.7 Not Used

2.12.8 Not Used

2.12.9 Cabinet Construction

Casings for the specified unitary equipment shall be constructed of galvanized steel or aluminum sheet metal and galvanized or aluminum structural members. Minimum thickness of single wall exterior surfaces shall be 18 gauge galvanized steel or 071 inch thick aluminum on units with a capacity above 20 tons and 20 gauge galvanized steel or 0.064 inch thick aluminum on units with a capacity less than 20 tons. Casing shall be fitted with lifting provisions, access panels or doors, fan vibration isolators, electrical control panel, corrosion-resistant components, structural support members, insulated condensate drip pan and drain, and internal insulation in the cold section of the casing. Where double-wall insulated construction is proposed, minimum exterior galvanized sheet metal thickness shall be 20 gauge. Provisions to permit replacement of major unit components shall be incorporated. Penetrations of cabinet surfaces, including the floor, shall be sealed. Unit shall be fitted with a drain pan which extends under all areas where water may accumulate. Drain pan shall be fabricated from Type 300 stainless steel, galvanized steel with protective coating as required, or an approved plastic material. Pan insulation shall be water impervious. Extent and effectiveness of the insulation of unit air containment surfaces shall prevent, within limits of the specified insulation, heat transfer between the unit exterior and ambient air, heat transfer between the two conditioned air streams, and condensation on surfaces. Insulation shall conform to ASTM C 1071. Paint and finishes shall comply with the requirements specified in paragraph "Factory Coating".

2.12.9.1 Indoor Cabinet

Indoor cabinets shall be suitable for the specified indoor service and enclose all unit components.2.12.9.2 Outdoor Cabinet

Outdoor cabinets shall be suitable for outdoor service with a weathertight, insulated and corrosion-protected structure. Cabinets constructed exclusively for indoor service which have been modified for outdoor service are not acceptable.

2.12.10 Not Used

2.13 Not Used

2.14 Not Used

2.15 Not Used

2.16 Not USed

2.17 Not Used

2.18 Not Used

2.19 Not Used

2.20 Not used

2.21 REFRIGERANT SIGNS

Refrigerant signs shall be a medium-weight aluminum type with a baked enamel finish. Signs shall be suitable for indoor or outdoor service. Signs shall have a white background with red letters not less than 0.5 inches in height.

2.21.1 Installation Identification

Each new refrigeration system shall be provided with a refrigerant sign which indicates the following as a minimum:

a. Contractor's name
b. Refrigerant number and amount of refrigerant.
c. The lubricant identity and amount.
d. Field test pressure applied.

2.21.2 Controls and Piping Identification

Refrigerant systems containing more than 110 lb of refrigerant shall be provided with refrigerant signs which designate the following as a minimum:

a. Valves or switches for controlling the refrigerant flow and the refrigerant compressor.
b. Pressure limiting device.
c. Refer to Section 15950 for control sequences.

2.22 INSULATION

2.22.1 Field Installed Insulation

Field installed insulation shall be as specified in Section 15080 THERMAL INSULATION FOR MECHANICAL SYSTEMS.

2.22.2 Factory Installed Insulation

Factory applied insulation shall be as specified for the equipment to be insulated except that refrigerant suction lines shall be insulated with unicellular plastic foam. Insulation shall comply with the fire hazard rating specified in Section 15080 THERMAL INSULATION FOR MECHANICAL SYSTEMS.

2.23 Not Used

2.24 TEMPERATURE CONTROLS

Temperature controls shall be in accordance with Section 15950HEATING, VENTILATING AND AIR CONDITIONING HVAC CONTROL SYSTEMS.

2.25 DUCTWORK COMPONENTS

2.25.1 Metal Ductwork

Every aspect of metal ductwork construction, including fittings and components, shall comply with SMACNA TAB HVAC Sys unless otherwise specified. Elbows shall be radius type with a centerline radius of 1-1/2 times the width or diameter of the duct where space permits. Otherwise, elbows having a minimum radius equal to the width or diameter of the duct or square elbows with factory fabricated turning vanes may be used. Static pressure Class 1/2, 1, and 2 inch w.g. ductwork shall meet the requirements of Seal Class C. Class 3 through 10 inch shall meet the requirements of Seal Class A. Sealants shall conform to fire hazard classification specified in Section 15080 THERMAL INSULATION FOR MECHANICAL SYSTEMS. Pressure sensitive tape shall not be used as a sealant. Spiral lock seam duct, and flat oval shall be made with duct sealant and locked with not less than 3 equally spaced drive screws or other approved methods indicated in SMACNA TAB HVAC Sys. The sealant shall be applied to the exposed male part of the fitting collar so that the sealer will be on the inside of the joint and fully protected by the metal of the duct fitting. One brush coat of the sealant shall be applied over the outside of the joint to at least 2 inch band width covering all screw heads and joint gap. Dents in the male portion of the slip fitting collar will not be acceptable.

2.25.1.1 Transitions

Diverging air flow transitions shall be made with each side pitched out a maximum of 15 degrees, for an included angle of 30 degrees. Transitions for converging air flow shall be made with each side pitched in a maximum of 30 degrees, for an included angle of 60 degrees, or shall be as indicated. Factory-fabricated reducing fittings for systems using round duct sections when formed to the shape of the ASME short flow nozzle, need not comply with the maximum angles specified.

2.25.1.2 Metallic Flexible Duct

Metallic type duct shall be single-ply galvanized steel. Duct shall be of corrugated/interlocked, folded and knurled type seam construction, bendable without damage through 180 degrees with a throat radius equal to 1/2 duct diameter. Duct shall conform to UL 181 and shall be rated for positive or negative working pressure of 15 inches water gauge at 350 degrees F when duct is aluminum, and 650 degrees F when duct is galvanized steel or stainless steel.

2.25.1.3 Insulated Nonmetallic Flexible Duct Runouts

Flexible duct runouts shall be used only where indicated. Runouts shall not exceed 10 feet in length, shall be preinsulated, factory fabricated, and comply with NFPA 90A and UL 181. Either field or factory applied vapor barrier shall be provided. Where coil induction or high velocity units are supplied with vertical air inlets, a streamlined and vaned and mitered elbow transition piece shall be provided for connection to the flexible duct or hose. The last elbow to these units, other than the vertical air inlet type, shall be a die-stamped elbow and not a flexible connector. Insulated flexible connectors may be used as runouts. The insulation material surface shall not be exposed to the air stream.

2.25.1.4 General Service Duct Connectors

A flexible duct connector approximately 6 inches in width shall be provided where sheet metal connections are made to fans or where ducts of dissimilar metals are connected. For round/oval ducts, the flexible material shall be secured by stainless steel or zinc-coated, iron clinch-type draw bands. For rectangular ducts, the flexible material locked to metal collars shall be installed using normal duct construction methods. The composite connector system shall comply with UL 214 and be classified as "flame-retarded fabrics" in UL Bld Mat Dir.

2.25.2 Not Used

2.25.3 Ductwork Insulation

Ductwork insulation and related materials shall conform to the requirements of Section 15080 THERMAL INSULATION FOR MECHANICAL SYSTEMS.

2.25.4 Ductwork Accessories

2.25.4.1 Duct Access Doors

Access doors shall be provided in ductwork where indicated and at all air flow measuring devices, automatic dampers, fire dampers, coils, thermostats, and other apparatus requiring service and inspection in the duct system, and unless otherwise shown, shall conform to SMACNA TAB HVAC Sys. Access doors shall be provided upstream and downstream of air flow measuring primaries and heating and cooling coils. Doors shall be minimum 15 x 18 inches, unless otherwise shown. Where duct size will not accommodate this size door, the doors shall be made as large as practicable. Doors 24 x 24 inches or larger shall be provided with fasteners operable from both sides. Doors in insulated ducts shall be the insulated type.

2.25.4.2 Fire Dampers

Fire dampers shall be 1-1/2 hour fire rated unless otherwise indicated. Fire dampers shall conform to the requirements of NFPA 90A and UL 555. Fire dampers shall be automatic operating type and shall have a dynamic rating suitable for the maximum air velocity and pressure differential to which it will be subjected. Fire dampers shall be approved for the specific application and shall be installed according to their listing. Fire dampers shall be equipped with a steel sleeve or adequately sized frame installed in such a manner that disruption of the attached ductwork, if any, will not impair the operation of the damper. Sleeves or frames shall be equipped with perimeter mounting angles attached on both sides of the wall or floor opening. Ductwork in fire-rated floor-ceiling or roof-ceiling assembly systems with air ducts that pierce the ceiling of the assemblies shall be constructed in conformance with UL Fire Resist Dir. Fire dampers shall be curtain type with damper blades out of the air stream ormulti-blade type. Dampers shall not reduce the duct or the air transfer opening cross-sectional area. Dampers shall be installed so that the centerline of the damper depth or thickness is located in the centerline of the wall, partition or floor slab depth or thickness. Unless otherwise indicated, the installation details given in SMACNA Install Fire Damp HVAC and in manufacturer's instructions for fire dampers shall be followed.

2.25.4.3 Splitters and Manual Balancing Dampers

Splitters and manual balancing dampers shall be furnished with accessible operating mechanisms. Where operators occur in finished portions of the building, operators shall be chromium plated with all exposed edges rounded. Splitters shall be operated by quadrant operators or 3/16 inch rod brought through the side of the duct with locking setscrew and bushing. Two rods are required on splitters over 8 inches. Manual volume control dampers shall be operated by locking-type quadrant operators. Dampers and splitters shall be 2 gauges heavier than the duct in which installed. Unless otherwise indicated, multileaf dampers shall be opposed blade type with maximum blade width of 12 inches. Access doors or panels shall be provided for all concealed damper operators and locking setscrews. Unless otherwise indicated, the locking-type quadrant operators for dampers, when installed on ducts to be thermally insulated, shall be provided with stand-off mounting brackets, bases, or adapters to provide clearance between the duct surface and the operator not less than the thickness of the insulation. Stand-off mounting items shall be integral with the operator or standard accessory of the damper manufacturer. Volume dampers shall be provided where indicated.

2.25.4.4 Air Deflectors and Branch Connections

Air deflectors shall be provided at all duct mounted supply outlets, at all takeoff or extension collars to supply outlets, at all duct branch takeoff connections, and at all 90 degree elbows, as well as at all locations as indicated on the drawings or shown in the Sheet Metal and Air Contractors National Association manuals. Air deflectors, except those installed in 90 degree elbows, shall be provided with an approved means of adjustment. Adjustment shall be made from easily accessible means inside the duct or from an adjustment with sturdy lock on the face of the duct. When installed on ducts to be thermally insulated, external adjustments shall be provided with stand-off mounting brackets, integral with the adjustment device, to provide clearance between the duct surface and the adjustment device not less than the thickness of the thermal insulation. Air deflectors shall be factory-fabricated units consisting of curved turning vanes or louver blades designed to provide uniform air distribution and change of direction with minimum turbulence or pressure loss. Air deflectors shall be factory or field assembled. Blade air deflectors, also called blade air extractors, shall be approved factory fabricated units consisting of equalizing grid and adjustable blade and lock. Adjustment shall be easily made from the face of the diffuser or by position adjustment and lock external to the duct. Stand-off brackets shall be provided on insulated ducts and are described herein before. Fixed air deflectors, also called turning vanes, shall be provided in all 90 degree elbows. Turning vanes shall be designed as shown in the Sheet Metal and Air Condition Contractors National Association manuals.

2.25.5 Duct Sleeves, Framed Prepared Openings, Closure Collars

2.25.5.1 Duct Sleeves

Duct sleeves shall be provided for all round ducts 15 inchesin diameter or less passing through floors, walls, ceilings, or roof, and installed during construction of the floor, wall, ceiling, or roof. Round ducts larger than 15 inches in diameter and all square, rectangular, and oval ducts passing through floors, walls, ceilings, or roof shall be installed through framed prepared openings. The Contractor shall be responsible for the proper size and location of sleeves and prepared openings. Sleeves and framed openings

are also required where grilles, registers, and diffusers are installed at the openings. Framed prepared openings shall be fabricated from 20 gauge galvanized steel, unless otherwise indicated. Where sleeves are installed in bearing walls or partitions, black steel pipe, ASTM A 53, Schedule 20 shall be used. Sleeve shall provide 1 inch clearance between the duct and the sleeve or 1 inch clearance between the insulation and the sleeve for insulated ducts.

2.25.5.2 Framed Prepared Openings

Openings shall have 1 inch clearance between the duct and the opening or 1 inch clearance between the insulation and the opening for insulated ducts.

2.25.5.3 Closure Collars

Collars shall be fabricated of galvanized sheet metal not less than 4 inches wide, unless otherwise indicated, and shall be installed on exposed ducts on each side of walls or floors where sleeves or prepared openings are provided. Collars shall be installed tight against surfaces. Collars shall fit snugly around the duct or insulation. Sharp edges of the collar around insulated duct shall be ground smooth to preclude tearing or puncturing the insulation covering or vapor barrier. Collars for round ducts 15 inches in diameter or less shall be fabricated from 20 gauge galvanized steel. Collars for round ducts larger than 15 inches and all square, and rectangular ducts shall be fabricated from 18 gauge galvanized steel. Collars shall be installed with fasteners on maximum 6 inch centers, except that not less than 4 fasteners shall be used.

2.25.6 Not Used

2.25.6.1

2.25.6.2 2.25.6.3

2.25.7 Diffusers, Registers, and Grilles

Units shall be factory-fabricated of steel, corrosion-resistant steel, or aluminum and shall distribute the specified quantity of air evenly over space intended without causing noticeable drafts, air movement faster than 50 fpm in occupied zone, or dead spots anywhere in the conditioned area. Outlets for diffusion, spread, throw, and noise level shall be as required for specified performance. Performance shall be certified in accordance with ADC 1062:GRD. Inlets and outlets shall be sound rated and certified in accordance with ADC 1062:GRD. Sound power level shall be as indicated. Diffusers and registers shall be provided with volume damper with accessible operator, unless otherwise indicated; or if standard with the manufacturer, an automatically controlled device will be acceptable. Volume dampers shall be opposed blade type for all diffusers and registers, except linear slot diffusers. Linear slot diffusers shall be provided with round or elliptical balancing dampers. Where the inlet and outlet openings are located less than 7 feet above the floor, they shall be protected by a grille or screen in accordance with NFPA 90A.

2.25.7.1 Diffusers

Diffuser types shall be as indicated. Ceiling mounted units shall be furnished with antismudge devices, unless the diffuser unit minimizes

ceiling smudging through design features. Diffusers shall be provided with air deflectors of the type indicated. Air handling troffers or combination light and ceiling diffusers shall conform to the requirements of UL Elec Const Dir for the interchangeable use as cooled or heated air supply diffusers or return air units. Ceiling mounted units shall be installed with rims tight against ceiling. Sponge rubber gaskets shall be provided between ceiling and surface mounted diffusers for air leakage control. Suitable trim shall be provided for flush mounted diffusers. Duct collar connecting the duct to diffuser shall be airtight and shall not interfere with volume controller. Return or exhaust units shall be similar to supply diffusers.

2.25.7.2 Registers and Grilles

Units shall be four-way directional-control type, except that return and exhaust registers may be fixed horizontal or vertical louver type similar in appearance to the supply register face. Registers shall be provided with sponge-rubber gasket between flanges and wall or ceiling. Wall supply registers shall be installed at least 6 inches below the ceiling unless otherwise indicated. Return and exhaust registers shall be located 6 inches above the floor unless otherwise indicated. Four-way directional control may be achieved by a grille face which can be rotated in 4 positions or by adjustment of horizontal and vertical vanes. Grilles shall be as specified for registers, without volume control damper.

2.25.8 Louvers

Louvers shall be furnished and installed by others.

2.26 Not Used

2.27 REFRIGERANT PIPING

Refrigerant piping, valves, fittings, and accessories shall conform to the requirements of ASHRAE 15 and ASME B31.5, except as specified.

2.27.1 Steel Pipe

Steel pipe for refrigerant service shall conform to ASTM A 53, Schedule 40, Type E or S, Grades A or B. Type F pipe shall not be used.

2.27.2 Joints and Fittings, Steel Pipe

Joints and fittings shall be steel butt-welding, socket-welding, or malleable iron threaded type. Pipe shall be welded except that joints on lines 2 inches and smaller may be threaded. Threads shall be tapered type conforming to ASME B1.20.1. The malleable iron threaded type fitting shall be of a weight corresponding to adjacent pipe. Flanges and flange faces of fittings shall be tongue-and-groove type with gaskets suitable for the refrigerant used; size 1 inch and smaller shall be oval, two-bolt type; size above 1 inch, up to and including 4 inches, shall be square four-bolt type; and sizes over 4 inches shall be round.

2.27.3 Steel Tubing

Steel tubing for refrigeration service shall be in accordance with ASTM A 334/A 334M, Grade 1. Tubing with a nominal diameter of 3/8 inch or 1/2 inch shall have a wall thickness of 0.049 inches. Tubing with a nominal diameter of 3/4 inch through 2 inches shall have a wall thickness of

0.065 inches. Tubing with a nominal diameter of 2 1/2 inches through 4 inches shall have a wall thickness of 0.095 inches. Steel tubing shall be cold-rolled, electric-forged, welded-steel. One end of the tubing shall be provided with a socket. Steel tubing shall be cleaned, dehydrated, and capped.

2.27.4 Joints and Fittings, Steel Tubing

Joints and fittings shall be socket type provided by the steel tubing manufacturer.

2.27.5 Copper Tubing

Copper tubing shall conform to ASTM B 280 annealed or hard drawn as required. Copper tubing shall be soft annealed where bending is required and hard drawn where no bending is required. Soft annealed copper tubing shall not be used in sizes larger than 1-3/8 inches. Joints shall be brazed except that joints on lines 7/8 inchand smaller may be flared.

2.27.6 Joints and Fittings, Copper Tubing

Copper tube joints and fittings shall be flare joint type with short-shank flare, or solder-joint pressure type. Joints and fittings for brazed joint shall be wrought-copper or forged-brass sweat fittings. Cast sweat-type joints and fittings shall not be allowed for brazed joints.

2.27.7 Valves

Valves shall be pressure and temperature rated for contained refrigerant service and shall comply with ASME B31.5. Metals of construction shall be ferrous or copper based. Atmosphere exposed valve stems shall be stainless steel or corrosion resistant metal plated carbon steel. Valve body connections shall be brazed or welded socket, flanged or combination thereof. Threaded connections shall not be used, except in pilot pressure or gauge lines where maintenance disassembly is required and welded flanges cannot be used. Valves shall be suitable for or fitted with extended copper ends for brazing in-place without disassembly. Ferrous body valves shall be fitted with factory fabricated and brazed copper transitions. To minimize system pressure drops, where practicable, globe valves shall be angle body type, and straight line valves shall be full port ball type. Control valve inlets shall be fitted with integral or adapted strainer or filter where recommended or required by manufacturer. Valves shall be cleaned and sealed moisture-tight.

2.27.7.1 Refrigerant-Stop Valves

Valves, in sizes through 5/8 inch, shall be handwheel operated, straight or angle, packless diaphragm globe type with back-seating stem, brazed ends, except where SAE flare or retained seal cap connections are required. In sizes over 5/8 inch, valves shall be globe or angle type, wrench operated with ground-finish stems, or ball valves, packed especially for refrigerant service, back seated, and provided with seal caps. Refrigerant isolation and shut-off valves shall have retained or captive spindles and facilities for tightening or replacement of the gland packing under line pressure as applicable. Stop valves shall have back-seating plated steel stem, bolted bonnet in sizes 1-1/8 inches OD and larger, integral or flanged transition brazed socket. Valves in sizes through 2-1/2 inches shall be end-entry body assembly, full-port, floating ball type, with equalizing orifice fitted chrome plated ball, seats and seals of

tetrafluoroethylene, chrome plated or stainless steel stem, and seal cap. In sizes 4 inch IPS and larger, and in smaller sizes where carbon steel piping is used, valve bodies shall be tongue and groove flanged and complete with mating flange, gaskets and bolting for socket or butt-weld connection. Purge, charge and receiver valves shall be of manufacturer's standard configuration.

2.27.7.2 Check Valves

Valve shall be designed for service application, spring-loaded type where required, with resilient seat and with flanged body in sizes 1/2 inch and larger. Valve shall provide positive shut-off at [1-1/2] [2] [3] psi differential pressure.

2.27.7.3 Liquid Solenoid Valves

Valves shall comply with ARI 760 and be suitable for continuous duty with applied voltages 15 percent under and 5 percent over nominal rated voltage at maximum and minimum encountered pressure and temperature service conditions. Valves shall be direct-acting or pilot-operating type, packless, except that packed stem, seal capped, manual lifting provisions shall be furnished. Solenoid coils shall be moisture-proof, UL approved, totally encapsulated or encapsulated and metal jacketed as required. Valves shall have safe working pressure of 400 psi and a maximum operating pressure differential of at least 200 psi at 85 percent rated voltage. Valves shall have an operating pressure differential suitable for the refrigerant used.

2.27.7.4 Expansion Valves

Expansion valves conform to requirements of ARI 750. Valve shall be of the diaphragm and spring type with internal or external equalizers, and bulb and capillary tubing. Valve shall be provided with an external superheat adjustment along with a seal cap. Internal equalizers may be utilized where flowing refrigerant pressure drop between outlet of the valve and inlet to the evaporator coil is negligible and pressure drop across the evaporator is less than the pressure difference corresponding to 2 degrees F of saturated suction temperature at evaporator conditions. Bulb charge shall be determined by the manufacturer for the application and such that liquid will remain in the bulb at all operating conditions. Gas limited liquid charged valves and other valve devices for limiting evaporator pressure shall not be used without a distributor or discharge tube or effective means to prevent loss of control when bulb becomes warmer than valve body. Pilot-operated valves shall have a characterized plug to provide required modulating control. A de-energized solenoid valve may be used in the pilot line to close the main valve in lieu of a solenoid valve in the main liquid line. An isolatable pressure gauge shall be provided in the pilot line, at the main valve. Automatic pressure reducing or constant pressure regulating expansion valves may be used only where indicated or for constant evaporator loads.

2.27.7.5 Safety Relief Valve

Valve shall be the two-way type. Single type valves shall be used only where indicated. Valve shall bear the ASME code symbol. Valve capacity shall be certified by the National Board of Boiler and Pressure Vessel Inspectors. Valve shall be of an automatically reseating design after activation.

2.27.7.6 Evaporator Pressure Regulators, Direct-Acting

Valve shall include a diaphragm/spring power assembly, external pressure adjustment with seal cap, and pressure gauge port. Valve shall maintain a constant inlet pressure by balancing inlet pressure on diaphragm against an adjustable spring load. Pressure drop at system design load shall not exceed the pressure difference corresponding to a 2 degrees F change in saturated refrigerant temperature at evaporator operating suction temperature. Spring shall be selected for indicated maximum allowable suction pressure range.

2.27.7.7 Refrigerant Access Valves

Refrigerant access valves and hose connections shall be in accordance with ARI ANSI/ARI 720.

2.27.8 Accessories

2.27.8.1 Filter Driers

Driers shall conform to ARI ANSI/ARI 710. Sizes 5/8 inch and larger shall be the full flow, replaceable core type. Sizes 1/2 inch and smaller shall be the sealed type. Cores shall be of suitable desiccant that will not plug, cake, dust, channel, or break down, and shall remove water, acid, and foreign material from the refrigerant. Filter driers shall be constructed so that none of the desiccant will pass into the refrigerant lines. Minimum bursting pressure shall be 1,500 psi.

2.27.8.2 Sight Glass and Liquid Level Indicator

a. Assembly and Components: Assembly shall be pressure- and temperature-rated and constructed of materials suitable for the service. Glass shall be borosilicate type. Ferrous components subject to condensation shall be electro-galvanized.

b. Gauge Glass: Gauge glass shall include top and bottom isolation valves fitted with automatic checks, and packing followers; red-line or green-line gauge glass; elastomer or polymer packing to suit the service; and gauge glass guard.

c. Bull's-Eye and Inline Sight Glass Reflex Lens: Bull's-eye and inline sight glass reflex lens shall be provided for dead-end liquid service. For pipe line mounting, two plain lenses in one body suitable for backlighted viewing shall be provided.

d. Moisture Indicator: Indicator shall be a self-reversible action, moisture reactive, color changing media. Indicator shall be furnished with full-color-printing tag containing color, moisture and temperature criteria. Unless otherwise indicated, the moisture indicator shall be an integral part of each corresponding sight glass.

2.27.8.3 Vibration Dampeners

Dampeners shall be of the all-metallic bellows and woven-wire type.

2.27.8.4 Flexible Pipe Connectors

Connector shall be pressure and temperature rated for the service in

accordance with ASHRAE 15 and ASME B31.5. Connector shall be a composite of interior corrugated phosphor bronze or Type 300 Series Stainless steel, as required for fluid service, with exterior reinforcement of bronze, stainless steel or monel wire braid. Assembly shall be constructed with a safety factor of not less than 4 at 300 degrees F. Unless otherwise indicated, the length of a flexible connector shall be as recommended by the manufacturer for the service intended.

2.27.8.5 Strainers

Strainers used in refrigerant service shall have brass or cast iron body, Y-or angle-pattern, cleanable, not less than 60-mesh noncorroding screen of an area to provide net free area not less than ten times the pipe diameter with pressure rating compatible with the refrigerant service. Screens shall be stainless steel or monel and reinforced spring-loaded where necessary for bypass-proof construction.

2.27.8.6 Brazing Materials

Brazing materials for refrigerant piping shall be in accordance with AWS A5.8, Classification BCuP-5.

2.28 DRAIN AND MISCELLANEOUS PIPING

Piping, fittings, valves and accessories for drain and miscellaneous services shall be in accordance with Section 15400 PLUMBING, GENERAL PURPOSE.

2.29 FABRICATION

2.29.1 Factory Coating

Unless otherwise specified, equipment and component items, when fabricated from ferrous metal, shall be factory finished with the manufacturer's standard finish, except that items located outside of buildings shall have weather resistant finishes that will withstand [125] [500] hours exposure to the salt spray test specified in ASTM B 117 using a 25 percent sodium chloride solution. Immediately after completion of the test, the specimen shall show no signs of blistering, wrinkling, cracking, or loss of adhesion and no sign of rust creepage beyond 1/8 inch on either side of the scratch mark. Cut edges of galvanized surfaces where hot-dip galvanized sheet steel is used shall be coated with a zinc-rich coating conforming to ASTM D 520, Type I.

2.29.2 Field Painting

Painting required for surfaces not otherwise specified, and finish painting of items only primed at the factory are specified in Section 09900PAINTING, GENERAL.

2.29.2.1 Color Coding

Color coding for piping identification is specified in Section 09900 PAINTING, GENERAL.

2.29.2.2 Not Used

PART 3 EXECUTION

3.1 INSTALLATION

Work shall be performed in accordance with the manufacturer's published diagrams, recommendations, and equipment warranty requirements. Where equipment is specified to conform to the requirements of ASME BPV VIII Div 1 and ASME BPV IX, the design, fabrication, and installation of the system shall conform to ASME BPV VIII Div 1 and ASME BPV IX.

3.1.1 Equipment

Refrigeration equipment and the installation thereof shall conform to ASHRAE 15. Necessary supports shall be provided for all equipment, appurtenances, and pipe as required, including frames or supports for compressors, pumps, cooling towers, condensers, and similar items. Compressors shall be isolated from the building structure. If mechanical vibration isolators are not provided, vibration absorbing foundations shall be provided. Each foundation shall include isolation units consisting of machine and floor or foundation fastenings, together with intermediate isolation material. Other floor-mounted equipment shall be set on not less than a 6 inch concrete pad doweled in place. Concrete foundations for floor mounted pumps shall have a mass equivalent to three times the weight of the components, pump, base plate, and motor to be supported. In lieu of concrete pad foundation, concrete pedestal block with isolators placed between the pedestal block and the floor may be provided. Concrete pedestal block shall be of mass not less than three times the combined pump, motor, and base weights. Isolators shall be selected and sized based on load-bearing requirements and the lowest frequency of vibration to be isolated. Lines connected to pumps mounted on pedestal blocks shall be provided with flexible connectors. Foundation drawings, bolt-setting information, and foundation bolts shall be furnished prior to concrete foundation construction for all equipment indicated or required to have concrete foundations. Concrete for foundations shall be as specified in Section 03300 CAST-IN-PLACE STRUCTURAL CONCRETE. Equipment shall be properly leveled, aligned, and secured in place in accordance with manufacturer's instructions.

3.1.2 Mechanical Room Ventilation

Mechanical ventilation systems shall be in accordance with Section 15895 AIR SUPPLY, DISTRIBUTION, VENTILATION, AND EXHAUST SYSTEM.

3.1.3 Building Surface Penetrations

Sleeves in nonload bearing surfaces shall be galvanized sheet metal, conforming to ASTM A 653/A 653M, Coating Class G-90, 20 gauge. Sleeves in load bearing surfaces shall be uncoated carbon steel pipe, conforming to ASTM A 53, Standard weight. Sealants shall be applied to moisture and oil-free surfaces and elastomers to not less than 1/2 inch depth. Sleeves shall not be installed in structural members.

3.1.3.1 Refrigerated Space

Refrigerated space building surface penetrations shall be fitted with sleeves fabricated from hand-lay-up or helically wound, fibrous glass reinforced polyester or epoxy resin with a minimum thickness equal to equivalent size Schedule 40 steel pipe. Sleeves shall be constructed with integral collar or cold side shall be fitted with a bonded slip-on flange or extended collar. In the case of masonry penetrations where sleeve is not cast-in, voids shall be filled with latex mixed mortar cast to shape of

sleeve and flange/external collar type sleeve shall be assembled with butyl elastomer vapor barrier sealant through penetration to cold side surface vapor barrier overlap and fastened to surface with masonry anchors. Integral cast-in collar type sleeve shall be flashed with not less than 4 inches of cold side vapor barrier overlap of sleeve surface. Normally noninsulated penetrating round surfaces shall be sealed to sleeve bore with mechanically expandable seals in vapor tight manner and remaining warm and cold side sleeve depth shall be insulated with not less than 4 inches of foamed-in-place rigid polyurethane or foamed-in-place silicone elastomer. Vapor barrier sealant shall be applied to finish warm side insulation surface. Warm side of penetrating surface shall be insulated beyond vapor barrier sealed sleeve insulation for a distance which prevents condensation. Wires in refrigerated space surface penetrating conduit shall be sealed with vapor barrier plugs or compound to prevent moisture migration through conduit and condensation therein.

3.1.3.2 General Service Areas

Each sleeve shall extend through its respective wall, floor, or roof, and shall be cut flush with each surface. Pipes passing through concrete or masonry wall or concrete floors or roofs shall be provided with pipe sleeves fitted into place at the time of construction. Sleeves shall be of such size as to provide a minimum of 1/4 inch all-around clearance between bare pipe and sleeves or between jacketed-insulation and sleeves. Except in pipe chases or interior walls, the annular space between pipe and sleeve or between jacket over-insulation and sleeve shall be sealed in accordance with Section 07900 JOINT SEALING.

3.1.3.3 Waterproof Penetrations

Pipes passing through roof or floor waterproofing membrane shall be installed through a 17-ounce copper sleeve, or a 0.032 inch thick aluminum sleeve, each within an integral skirt or flange. Flashing sleeve shall be suitably formed, and skirt or flange shall extend not less than 8 inches from the pipe and be set over the roof or floor membrane in a troweled coating of bituminous cement. The flashing sleeve shall extend up the pipe a minimum of 2 inches above the roof or floor penetration. The annular space between the flashing sleeve and the bare pipe or between the flashing sleeve and the metal-jacket-covered insulation shall be sealed as indicated. Penetrations shall be sealed by either one of the following methods.

a. Waterproofing Clamping Flange: Pipes up to and including 10 inches in diameter passing through roof or floor waterproofing membrane may be installed through a cast iron sleeve with caulking recess, anchor lugs, flashing clamp device, and pressure ring with brass bolts. Waterproofing membrane shall be clamped into place and sealant shall be placed in the caulking recess.

b. Modular Mechanical Type Sealing Assembly: In lieu of a waterproofing clamping flange and caulking and sealing of annular space between pipe and sleeve or conduit and sleeve, a modular mechanical type sealing assembly may be installed. Seals shall consist of interlocking synthetic rubber links shaped to continuously fill the annular space between the pipe/conduit and sleeve with corrosion protected carbon steel bolts, nuts, and pressure plates. Links shall be loosely assembled with bolts to form a continuous rubber belt around the pipe with a pressure plate under each bolt head and each nut. After the seal assembly

is properly positioned in the sleeve, tightening of the bolt shall cause the rubber sealing elements to expand and provide a watertight seal rubber sealing elements to expand and provide a watertight seal between the pipe/conduit seal between the pipe/conduit and the sleeve. Each seal assembly shall be sized as recommended by the manufacturer to fit the pipe/conduit and sleeve involved. The Contractor electing to use the modular mechanical type seals shall provide sleeves of the proper diameters.

3.1.3.4 Fire-Rated Penetrations

Penetration of fire-rated walls, partitions, and floors shall be sealed as specified in Section 07840 FIRESTOPPING.

3.1.3.5 Escutcheons

Finished surfaces where exposed piping, bare or insulated, pass through floors, walls, or ceilings, except in boiler, utility, or equipment rooms, shall be provided with escutcheons. Where sleeves project slightly from floors, special deep-type escutcheons shall be used. Escutcheon shall be secured to pipe or pipe covering.

3.1.4 Access Panels

Access panels shall be provided for all concealed valves vents, controls, and items requiring inspection or maintenance. Access panels shall be of sufficient size and located so that the concealed items may be serviced and maintained or completely removed and replaced. Access panels shall be as specified in Section 05500 MISCELLANEOUS METALS.

3.1.5 General Piping Installation

3.1.5.1 Brazed Joints

Brazing shall be performed in accordance with AWS Brazing Hdbk, except as modified herein. During brazing, the pipe and fittings shall be filled with a pressure regulated inert gas, such as nitrogen, to prevent the formation of scale. Before brazing copper joints, both the outside of the tube and the inside of the fitting shall be cleaned with a wire fitting brush until the entire joint surface is bright and clean. Brazing flux shall not be used. Surplus brazing material shall be removed at all joints. Steel tubing joints shall be made in accordance with the manufacturer's recommendations. Joints in steel tubing shall be painted with the same material as the baked-on coating within 8 hours after joints are made. Tubing shall be protected against oxidation during brazing by continuous purging of the inside of the piping using nitrogen. Piping shall be supported prior to brazing and not be sprung or forced.

3.1.5.2 Not Used

3.1.5.3 Not Used

3.1.5.4 Not Used

3.1.5.5 Flared Connections

When flared connections are used, a suitable lubricant shall be used between the back of the flare and the nut in order to avoid tearing the

flare while tightening the nut.

3.1.6 Not Used

3.1.7 Not Used

3.1.8 Refrigeration Piping

Unless otherwise specified, pipe and fittings installation shall conform to requirements of ASME B31.5. Pipe shall be cut accurately to measurement established at the jobsite and worked into place without springing or forcing. Cutting or otherwise weakening of the building structure to facilitate piping installation will not be permitted without written approval. Pipes shall be cut square, shall have burrs removed by reaming, and shall be installed in a manner to permit free expansion and contraction without damage to joints or hangers. Filings, dust, or dirt shall be wiped from interior of pipe before connections are made.

3.1.8.1 Directional Changes

Changes in direction shall be made with fittings, except that bending of pipe 4 inches and smaller will be permitted, provided a pipe bender is used and wide-sweep bends are formed. The centerline radius of bends shall not be less than 6 diameters of the pipe. Bent pipe showing kinks, wrinkles, or other malformations will not be accepted.

3.1.8.2 Functional Requirements

Piping shall be installed 1/2 inch per 10 feet of pipe in the direction of flow to ensure adequate oil drainage. Open ends of refrigerant lines or equipment shall be properly capped or plugged during installation to keep moisture, dirt, or other foreign material out of the system. Piping shall remain capped until installation. Equipment piping shall be in accordance with the equipment manufacturer's recommendations and the contract drawings.

3.1.8.3 Manual Valves

Stop valves shall be installed on each side of each piece of equipment such as compressors, condensers, evaporators, receivers, and other similar items in multiple-unit installation, to provide partial system isolation as required for maintenance or repair. Angle and globe valves shall be installed with stems horizontal unless otherwise indicated. Ball valves shall be installed with stems positioned to facilitate operation and maintenance. Isolating valves for pressure gauges and switches shall be external to thermal insulation. Safety switches shall not be fitted with isolation valves. Thermal wells for insertion thermometers and thermostats shall extend beyond thermal insulation surface not less than 1 inch.Filter dryers having access ports may be considered a point of isolation. Purge valves shall be provided at all points of systems where accumulated noncondensible gases would prevent proper system operation. Valves shall be furnished to match line size, unless otherwise indicated or approved.

3.1.8.4 Expansion Valves

Expansion valves shall be installed with the thermostatic expansion valve bulb located on top of the suction line when the suction line is less than 2-1/8 inches in diameter and at the 4 o'clock or 8 o'clock position on lines larger than 2-1/8 inches. The bulb shall be securely fastened with two clamps. The bulb shall be insulated. The bulb shall installed in a

horizontal portion of the suction line, if possible, with the pigtail on the bottom. If the bulb must be installed in a vertical line, the bulb tubing shall be facing up.

3.1.8.5 Valve Identification

Each system valve, including those which are part of a factory assembly, shall be tagged. Tags shall be in alphanumeric sequence, progressing in direction of fluid flow. Tags shall be embossed, engraved, or stamped plastic or nonferrous metal of various shapes, sized approximately 1-3/8 inch diameter, or equivalent dimension, substantially attached to a component or immediately adjacent thereto. Tags shall be attached with nonferrous, heavy duty, bead or link chain, 14 gauge annealed wire, nylon cable bands or as approved. Tag numbers shall be referenced in Operation and Maintenance Manuals and system diagrams.

3.1.8.6 Vibration Dampers

Vibration damper shall be provided in the suction and discharge lines on spring mounted compressors. Vibration dampers shall be installed parallel with the shaft of the compressor and be anchored firmly at the upstream end on the suction line and the downstream end in the discharge line.

3.1.8.7 Strainers

Strainers shall be provided immediately ahead of solenoid valves and expansion devices and where indicated. Strainers may be an integral part of the expansion valve.

3.1.8.8 Filter Dryer

A liquid line filter dryer shall be provided on each refrigerant circuit located such that all liquid refrigerant passes through a filter dryer. Dryers shall be sized in accordance with the manufacturers recommendations. A dryer shall be installed such that it can be isolated from the system, the isolated portion of the system evacuated, and the filter dryer replaced. Dryers shall be installed in the horizontal position except replaceable core filter dryers may be installed in the vertical position with the access flange on the bottom.

3.1.8.9 Sight Glass

A moisture indicating sight glass shall be installed in all refrigerant circuits down stream of filter dryers and where indicated. Sight glass shall be full line size.

3.1.8.10 Flexible Connectors

Flexible metallic connectors shall be installed perpendicular to line of motion being isolated. Piping for equipment with bidirectional motion shall be fitted with two flexible connectors, in perpendicular planes. Reinforced elastomer flexible connectors shall be installed in accordance with manufacturer's instructions. Piping guides and restraints related to flexible connectors shall be provided as required.

3.1.9 Thermometers

Thermometers located within 5 feet of floor may be rigid stem type. Where thermal well is located above 5 feet above floor, thermometer shall be

universal adjustable angle type or remote element type to 7 feet above floor and remote element type where thermal well is 7 feet or more above floor. Thermometers shall be located in coolant supply and return or waste lines at each heat exchanger, condenser water lines entering and leaving the condenser, at each automatic temperature control device without an integral thermometer, refrigerant liquid line leaving receiver, refrigerant suction line at each evaporator or liquid cooler, and where indicated or required for proper operation of equipment.

3.1.10 Piping Supports

Refrigerant pipe supports shall be in accordance with ASME B31.5. Hangers used to support piping 2 inches and larger shall be fabricated to permit adequate adjustment after erection while still supporting the load. Pipe guides and anchors shall be installed to keep pipes in accurate alignment, to direct the expansion movement, and to prevent buckling, swaying, and undue strain. Piping subjected to vertical movement, when operating temperatures exceed ambient temperatures, shall be supported by variable spring hangers and supports or by constant support hangers.

3.1.10.1 Not Used

3.1.10.2 Structural Attachments

Attachment to building structure concrete and masonry shall be by cast-in concrete inserts, built-in anchors, or masonry anchor devices. Inserts and anchors shall be applied with a safety factor not less than 5. Supports shall not be attached to metal decking. Masonry anchors for overhead applications shall be constructed of ferrous materials only. Material used for support shall be as specified under Section 05210 STRUCTURAL STEEL.

3.1.11 Pipe Hangers, Inserts, and Supports

Pipe hangers, inserts, and supports shall conform to MSS SP-58 and MSS SP-69, except as modified herein. Pipe hanger types 5, 12, and 26 shall not be used.

3.1.11.1 Hangers

Type 3 shall not be used on insulated piping. Type 24 may be used only on trapeze hanger systems or on fabricated frames.

3.1.11.2 Inserts

Type 18 inserts shall be secured to concrete forms before concrete is placed. Continuous inserts which allow more adjustments may be used if they otherwise meet the requirements for Type 18 inserts.

3.1.11.3 C-Clamps

Type 19 and 23 C-clamps shall be torqued per MSS SP-69 and have both locknuts and retaining devices, furnished by the manufacturer. Field-fabricated C-clamp bodies or retaining devices are not acceptable.

3.1.11.4 Angle Attachments

Type 20 attachments used on angles and channels shall be furnished with an added malleable-iron heel plate or adapter.

3.1.11.5 Saddles and Shields

Where Type 39 saddle or Type 40 shield are permitted for a particular pipe attachment application, the Type 39 saddle, connected to the pipe, shall be used on all pipe 4 inches and larger when the temperature of the medium is 60 degrees F or higher. Type 40 shields shall be used on all piping less than 4 inches and all piping 4 inches and larger carrying medium less than 60 degrees F. A high density insulation insert of cellular glass shall be used under the Type 40 shield for piping 2 inches and larger.

3.1.11.6 Horizontal Pipe Supports

Horizontal pipe supports shall be spaced as specified in MSS SP-69 and a support shall be installed not over 1 foot from the pipe fitting joint at each change in direction of the piping. Pipe supports shall be spaced not over 5 feet apart at valves.

3.1.11.7 Vertical Pipe Supports

Vertical pipe shall be supported at each floor, except at slab-on-grade, and at intervals of not more than 15 feet, not more than 8 feetfrom end of risers, and at vent terminations.

3.1.11.8 Pipe Guides

Type 35 guides using, steel, reinforced polytetrafluoroethylene (PTFE) or graphite slides shall be provided where required to allow longitudinal pipe movement. Lateral restraints shall be provided as required. Slide materials shall be suitable for the system operating temperatures, atmospheric conditions, and bearing loads encountered.

3.1.11.9 Steel Slides

Where steel slides do not require provisions for restraint of lateral movement, an alternate guide method may be used. On piping 4 inches and larger, a Type 39 saddle shall be used. On piping under 4 inches, a Type 40 protection shield may be attached to the pipe or insulation and freely rest on a steel slide plate.

3.1.11.10 High Temperature Guides with Cradles

Where there are high system temperatures and welding to piping is not desirable, then the Type 35 guide shall include a pipe cradle, welded to the guide structure and strapped securely to the pipe. The pipe shall be separated from the slide material by at least 4 inches, or by an amount adequate for the insulation, whichever is greater.

3.1.11.11 Multiple Pipe Runs

In the support of multiple pipe runs on a common base member, a clip or clamp shall be used where each pipe crosses the base support member. Spacing of the base support members shall not exceed the hanger and support spacing required for an individual pipe in the multiple pipe run.

3.1.12 Pipe Alignment Guides

Pipe alignment guides shall be provided where indicated for expansion loops, offsets, and bends and as recommended by the manufacturer for expansion joints, not to exceed 5 feet on each side of each expansion

joint, and in lines 4 inches or smaller not more than 2 feet on each side of the joint.

3.1.13 Pipe Anchors

Anchors shall be provided wherever necessary or indicated to localize expansion or to prevent undue strain on piping. Anchors shall consist of heavy steel collars with lugs and bolts for clamping and attaching anchor braces, unless otherwise indicated. Anchor braces shall be installed in the most effective manner to secure the desired results using turnbuckles where required. Supports, anchors, or stays shall not be attached where they will injure the structure or adjacent construction during installation or by the weight of expansion of the pipeline. Where pipe and conduit penetrations of vapor barrier sealed surfaces occur, these items shall be anchored immediately adjacent to each penetrated surface, to provide essentially zero movement within penetration seal. Detailed drawings of pipe anchors shall be submitted for approval before installation.

3.1.14 Piping Identification

Each piping system and direction of fluid flow shall be identified in accordance with applicable provisions of ANSI A13.1 with color coded, water, moisture and broad-spectrum temperature resistant, plastic labels.

3.1.15 Metal Ductwork

Installation shall be in accordance with SMACNA TAB HVAC Sys unless otherwise indicated. Duct supports for sheet metal ductwork shall be in accordance with SMACNA TAB HVAC Sys, unless otherwise specified. Friction beam clamps indicated in SMACNA TAB HVAC Sys will not be used. Supports on the risers shall allow free vertical movement of the duct. Supports shall be attached only to structural framing members and concrete slabs. Supports shall not be anchored to metal decking unless a means is provided and approved for preventing the anchor from puncturing the metal decking. Where supports are required between structural framing members, suitable intermediate metal framing shall be provided. Where C-clamps are used, retainer clips shall be provided.

3.1.16 Not Used

3.1.17 Not Used

3.1.18 Field Applied Insulation

Field applied insulation shall be as specified in Section 15080 THERMAL INSULATION FOR MECHANICAL SYSTEMS.

3.1.19 Factory Applied Insulation

Refrigerant suction lines between an evaporator and compressors and any cold gas inlet connections to gas cooled motors and exposed chilled water lines shall be insulated with not less than 3/4 inch thick unicellular plastic foam.

3.1.20 Framed Instructions

Framed instructions shall be framed under glass or laminated plastic and be

posted where directed. Instructions shall include equipment layout, wiring and control diagrams, piping, valves and control sequences, and typed condensed operation instructions. The condensed operation instructions shall include preventative maintenance procedures, methods of checking the system for normal and safe operation, and procedures for safely starting and stopping the system. The instructions shall be posted before acceptance testing of the system.

3.2 TESTS

Tests shall be conducted in the presence of the Contracting Officer. Utilities for testing shall be provided as specified in the SPECIAL CONTRACT REQUIREMENTS. Water and electricity required for the tests will be furnished by the Government. Any material, equipment, instruments, and personnel required for the test shall be provided by the Contractor. The services of a qualified technician shall be provided as required to perform all tests and procedures indicated herein. Field tests shall be coordinated with Section 15990 TESTING, ADJUSTING, AND BALANCING OF HVAC SYSTEMS.

3.2.1 Not Used

3.2.2 Refrigerant System

After all components of the refrigerant system have been installed and connected, the entire refrigeration system shall be subjected to a pneumatic test as described herein.

3.2.2.1 Preliminary Procedures

Prior to pneumatic testing, equipment which has been factory tested and refrigerant charged as well as equipment which could be damaged or cause personnel injury by imposed test pressure, positive or negative, shall be isolated from the test pressure or removed from the system. Safety relief valves and rupture discs, where not part of factory sealed systems, shall be removed and openings capped or plugged.

3.2.2.2 Pneumatic Test

Pressure control and excess pressure protection shall be provided at the source of test pressure. Valves shall be wide open, except those leading to the atmosphere. Test gas shall be dry nitrogen, with minus 70 degree F dewpoint and less than 5 ppm oil. Test pressure shall be applied in two stages before any refrigerant pipe is insulated or covered. First stage test shall be at 10 psi with every joint being tested with a thick soap or color indicating solution. Second stage tests shall raise the system to the minimum refrigerant leakage test pressure specified in ASHRAE 15 with a maximum test pressure 25 percent greater. Pressure above 100 psig shall be raised in 10 percent increments with a pressure acclimatizing period between increments. The initial test pressure shall be recorded along with the ambient temperature to which the system is exposed. Final test pressures of the second stage shall be maintained on the system for a minimum of 24 hours. At the end of the 24 hour period, the system pressure will be recorded along with the ambient temperature to which the system is exposed. A correction factor of 0.3 psi will be allowed for each degree F change between test space initial and final ambient temperature, plus for increase and minus for a decrease. If the corrected system pressure is not exactly equal to the initial system test pressure, then the system shall be investigated for leaking joints. To repair leaks, the joint shall be taken

apart, thoroughly cleaned, and reconstructed as a new joint. Joints repaired by caulking, remelting, or back-welding/brazing shall not be acceptable. Following repair, the entire system shall be retested using the pneumatic tests described above. The entire system shall be reassembled once the pneumatic tests are satisfactorily completed.

3.2.2.3 Evacuation Test

Following satisfactory completion of the pneumatic tests, the pressure shall be relieved and the entire system shall be evacuated to an absolute pressure of 300 micrometers. During evacuation of the system, the ambient temperature shall be higher than 35 degrees F. No more than one system shall be evacuated at one time by one vacuum pump. Once the desired vacuum has been reached, the vacuum line shall be closed and the system shall stand for 1 hour. If the pressure rises over 500 micrometers after the 1 hour period, then the system shall be evacuated again down to 300 micrometers and let set for another 1 hour period. The system shall not be charged until a vacuum of at least 500 micrometers is maintained for a period of 1 hour without the assistance of a vacuum line. If during the testing the pressure continues to rise, check the system for leaks, repair as required, and repeat the evacuation procedure. During evacuation, pressures shall be recorded by a thermocouple-type, electronic-type, or a calibrated-micrometer type gauge.

3.2.2.4 System Charging and Startup Test

Following satisfactory completion of the evacuation tests, the system shall be charged with the required amount of refrigerant by raising pressure to normal operating pressure and in accordance with manufacturer's procedures. Following charging, the system shall operate with high-side and low-side pressures and corresponding refrigerant temperatures, at design or improved values. The entire system shall be tested for leaks. Fluorocarbon systems shall be tested with halide torch or electronic leak detectors.

3.2.2.5 Refrigerant Leakage

If a refrigerant leak is discovered after the system has been charged, the leaking portion of the system shall immediately be isolated from the remainder of the system and the refrigerant pumped into the system receiver or other suitable container. Under no circumstances shall the refrigerant be discharged into the atmosphere.

3.2.2.6 Contractor's Responsibility

The Contractor shall, at all times during the installation and testing of the refrigeration system, take steps to prevent the release of refrigerants into the atmosphere. The steps shall include, but not be limited to, procedures which will minimize the release of refrigerants to the atmosphere and the use of refrigerant recovery devices to remove refrigerant from the system and store the refrigerant for reuse or reclaim. At no time shall more than 3 ounces of refrigerant be released to the atmosphere in any one occurrence. Any system leaks within the first year shall be repaired in accordance with the requirements herein at no cost to the Government including material, labor, and refrigerant if the leak is the result of defective equipment, material, or installation.

3.2.3 Ductwork Leak Tests

Ductwork leak test shall be performed for the entire air distribution

system, including fans, coils, filters, etc., Test procedure, apparatus, and report shall conform to SMACNA Leakage Test Mnl. Ductwork leak test shall be completed with satisfactory results prior to applying insulation to ductwork exterior.

3.2.4 Not Used

3.2.5 Not Used

3.2.6 System Performance Tests

After the foregoing tests have been completed and before each refrigeration system is accepted, tests to demonstrate the general operating characteristics of all equipment shall be conducted by a registered professional engineer or an approved manufacturer's start-up representative experienced in system start-up and testing, at such times as directed. Tests shall cover a period of not less than 48 hours for each system and demonstrate that the entire system is functioning in accordance with the drawings and specifications. Corrections and adjustments shall be made as necessary and tests shall be re-conducted to demonstrate that the entire system is functioning as specified. Prior to acceptance, service valve seal caps and blanks over gauge points shall be installed and tightened. Any refrigerant lost during the system startup shall be replaced. If tests do not demonstrate satisfactory system performance, deficiencies shall be corrected and the system shall be retested.

3.3 INSPECTIONS

At the conclusion of the one year period, cooling towers and condensers shall be inspected for problems due to corrosion, scale, and biological growth. If the cooling tower and condenser are found not to conform to the manufacturers recommended conditions, assuming the water treatment company recommendations have been followed; the water treatment company shall provide all chemicals and labor for cleaning or repairing the equipment as required by the manufacturer's recommendations.

3.4 CLEANING AND ADJUSTING

3.4.1 Piping

Prior to testing, pipes shall be cleaned free of scale and thoroughly flushed of all foreign matter. A temporary bypass shall be provided for water coils to prevent flushing water from passing through coils. Strainers and valves shall be thoroughly cleaned. Prior to testing and balancing, air shall be removed from each water system through the use of the air vents. Temporary measures, such as piping the overflow from vents to a collecting vessel shall be taken to avoid water damage during the venting process. Air vents shall be plugged or capped after the system has been vented.

3.4.2 Ductwork

Prior to testing, inside of ducts, plenums, and casing shall be thoroughly cleaned of all debris and blown free of small particles of rubbish and dust and then vacuum cleaned before installing outlet faces. Temporary filters shall be provided for fans that are operated during construction. New filters shall be installed after all construction dirt has been removed from the building and the ducts, plenum, casings, and other items specified have been vacuum cleaned. Fans shall be adjusted to the speed indicated by

the manufacturer to meet specified conditions.

3.4.3 Equipment

Equipment shall be wiped clean, with all traces of oil, dust, dirt, or paint spots removed. System shall be maintained in this clean condition until final acceptance. Bearings shall be lubricated with oil or grease as recommended by the manufacturer. Belts shall be tightened to proper tension. Control valves and other miscellaneous equipment requiring adjustment shall be adjusted to setting indicated or directed.

3.4.4 Testing, Adjusting, and Balancing

Testing, adjusting, and balancing shall be as specified in Section 15990 TESTING, ADJUSTING AND BALANCING OF HVAC SYSTEMS.

3.5 DEMONSTRATIONS

Contractor shall conduct a training course for the operating staff as designated by the Contracting Officer. The training period shall consist of a total 40 hours of normal working time and start after the system is functionally completed but prior to final acceptance tests. The field instructions shall cover all of the items contained in the approved operation and maintenance manuals as well as demonstrations of routine maintenance operations.

-- End of Section --

SECTION TABLE OF CONTENTS

DIVISION 15 - MECHANICAL

SECTION 15895

AIR SUPPLY, DISTRIBUTION, VENTILATION, AND EXHAUST SYSTEM

02/94

PART 1 GENERAL

1.1 REFERENCES
1.2 COORDINATION OF TRADES
1.3 DELIVERY AND STORAGE
1.4 SUBMITTALS

PART 2 PRODUCTS

2.1 STANDARD PRODUCTS
2.2 ASBESTOS PROHIBITION
2.3 NAMEPLATES
2.4 EQUIPMENT GUARDS AND ACCESS
2.5 Not Used
2.6 ELECTRICAL WORK
2.7 CONTROLS
2.8 DUCTWORK COMPONENTS
2.8.1 Metal Ductwork
2.8.1.1 Transitions
2.8.1.2 Not Used
2.8.1.3 Insulated Nonmetallic Flexible Duct Runouts
2.8.1.4 General Service Duct Connectors
2.8.2 Not Used
2.8.3 Ductwork Accessories
2.8.3.1 Duct Access Doors
2.8.3.2 Fire Dampers
2.8.3.3 Splitters and Manual Balancing Dampers
2.8.3.4 Air Deflectors and Branch Connections
2.8.4 Duct Sleeves, Framed Prepared Openings, Closure Collars
2.8.4.1 Duct Sleeves
2.8.4.2 Framed Prepared Openings
2.8.4.3 Closure Collars
2.8.5 Plenums and Casings for Field-Fabricated Units
2.8.5.1 Plenum and Casings
2.8.5.2 Casing
2.8.5.3 Access Doors
2.8.5.4 Factory-Fabricated Insulated Sheet Metal Panels
2.8.5.5 Not Used
2.8.6 Not Used
2.8.7 Diffusers, Registers, and Grilles
2.8.7.1 Diffusers
2.8.7.2 Registers and Grilles
2.8.8 Not Used
2.8.9 Air Vents, Penthouses, and Goosenecks
2.8.10 Bird Screens and Frames
2.8.11 Not Used

2.9 AIR SYSTEMS EQUIPMENT
2.9.1 Fans
2.9.1.1 Centrifugal Fans
2.9.1.2 In-Line Centrifugal Fans
2.9.1.3 Not Used
2.9.1.4 Not used
2.9.1.5 Not Used
2.9.1.6 Centrifugal Type Power Roof Ventilators
2.9.1.7 Not Used
2.9.1.8 Not Used
2.9.1.9 Ceiling Exhaust Fans
2.9.2 Coils
2.9.2.1 Direct-Expansion Coils
2.9.2.2 Water Coils
2.9.3 Air Filters
2.9.3.1 Extended Surface Pleated Panel Filters
2.9.3.2 Extended Surface Nonsupported Pocket Filters
2.9.3.3 Not Used
2.9.3.4 Not Used
2.9.3.5 Not Used
2.9.3.6 Not Used
2.9.3.7 Not Used
2.9.3.8 Not Used
2.9.3.9 Holding Frames
2.9.3.10 Filter Gauges
2.10 AIR HANDLING UNITS (3.1)
2.10.1 Not Used
2.10.2 Factory-Fabricated Air Handling Units
2.10.2.1 Casings
2.10.2.2 Heating and Cooling Coils
2.10.2.3 Not Used
2.10.2.4 Air Filters
2.10.2.5 Fans
2.10.2.6 Access Sections and Filter/Mixing Boxes
2.10.2.7 Not Used
2.10.2.8 Dampers
2.11 TERMINAL UNITS
2.11.1 Not Used
2.11.2 Not Used
2.11.3 Not Used
2.12 ENERGY RECOVERY DEVICES
2.12.1 Energy Wheel
2.12.2 Not Used
2.12.3 Not Used
2.13 FACTORY PAINTING

PART 3 EXECUTION

3.1 INSTALLATION
3.1.1
3.1.1.1
3.1.2 Not Used
3.1.2.1 [Enter Appropriate Subpart Title Here]
3.1.3 Not Used
3.1.4 Not Used
3.1.4.1 Not Used
3.1.4.2 Not Used
3.1.4.3 Not Used
3.1.5 Condensate Drain Lines

3.1.6 Not Used
3.1.7 Air Vents and Drains
3.1.7.1 Vents
3.1.7.2 Drains
3.1.8 Valves
3.1.9 Equipment and Installation
3.1.10 Access Panels
3.1.11 Flexible Connectors
3.1.12 Sleeved and Framed Openings
3.1.13 Metal Ductwork
3.1.14 Not Used
3.1.15 Not Used
3.1.16 Not Used
3.1.17 Not Used
3.1.18 Dust Control
3.1.19 Insulation
3.1.20 Duct Test Holes
3.1.21 Not Used
3.1.22 Power Transmission Components Adjustment
3.2 FIELD PAINTING AND PIPING IDENTIFICATION
3.3 Not Used
3.4 DUCTWORK LEAK TEST
3.5 CLEANING AND ADJUSTING
3.6 TESTING, ADJUSTING, AND BALANCING
3.7 PERFORMANCE TESTS
3.8 FIELD TRAINING

-- End of Section Table of Contents --

SECTION 15895

AIR SUPPLY, DISTRIBUTION, VENTILATION, AND EXHAUST SYSTEM
02/94

PART 1 GENERAL

1.1 REFERENCES

The publications listed below form a part of this specification to the extent referenced. The publications are referred to in the text by basic designation only.

AIR CONDITIONING AND REFRIGERATION INSTITUTE (ARI)

ARI ANSI/ARI 410	(1991) Forced-Circulation Air-Cooling and Air-Heating Coils
ARI ANSI/ARI 430	(1989) Central-Station Air-Handling Units
ARI Guideline D	(1996) Application and Installation of Central Station Air-Handling Units

AIR MOVEMENT AND CONTROL ASSOCIATION (AMCA)

AMCA ANSI/AMCA 210	(1985) Laboratory Methods of Testing Fans for Rating
AMCA Std 300	(1996) Reverberant Room Method for Sound Testing of Fans

AMERICAN BEARING MANUFACTURERS ASSOCIATION (AFBMA)

AFBMA ANSI B3.15/AFBMA Std 9	(1990) Load Ratings and Fatigue Life for Ball Bearings
AFBMA ANSI B3.16/AFBMA Std 11	(1990) Load Ratings and Fatigue Life for Roller Bearings

AMERICAN SOCIETY FOR TESTING AND MATERIALS (ASTM)

ASTM A 53	(1997) Pipe, Steel, Black and Hot-Dipped, Zinc-Coated, Welded and Seamless
ASTM A 123/A 123M	(1997a) Zinc (Hot-Dip Galvanized) Coatings on Iron and Steel Products
ASTM A 167	(1996) Stainless and Heat-Resisting Chromium-Nickel Steel Plate, Sheet, and Strip
ASTM A 924/A 924M	(1997a) General Requirements for Steel Sheet, Metallic-Coated by the Hot-Dip

	Process
ASTM B 117	(1997) Operating Salt Spray (FOG) Apparatus
ASTM C 1071	(1991) Thermal and Acoustical Insulation (Glass Fiber, Duct Lining Material)
ASTM D 520	(1984; R 1995) Zinc Dust Pigment
ASTM D 1654	(1992) Evaluation of Painted or Coated Specimens Subjected to Corrosive Environments
ASTM D 3359	(1995a) Measuring Adhesion by Tape Test
ASTM E 437	(1992) Industrial Wire Cloth and Screens (Square Opening Series)

AMERICAN SOCIETY OF HEATING, REFRIGERATING AND AIR-CONDITIONING ENGINEERS (ASHRAE)

ASHRAE 52.1	(1992) Gravimetric and Dust-Spot Procedures for Testing Air-Cleaning Devices Used in General Ventilation for Removing Particulate Matter
ASHRAE 62	(1989) Ventilation for Acceptable Indoor Air Quality
ASHRAE ANSI/ASHRAE 68	(1986) Laboratory Method of Testing In-Duct Sound Power Measurement Procedures for Fans
ASHRAE 70	(1991) Method of Testing for Rating the Performance of Air Outlets and Inlets
ASHRAE 84	(1991) Method of Testing Air-to-Air Heat Exchangers

NATIONAL ELECTRICAL MANUFACTURERS ASSOCIATION (NEMA)

NEMA MG 1	(1993; Rev 1; Rev 2; Rev 3) Motors and Generators

NATIONAL FIRE PROTECTION ASSOCIATION (NFPA)

NFPA 90A	(1996) Installation of Air Conditioning and Ventilating Systems

SHEET METAL AND AIR CONDITIONING CONTRACTORS' NATIONAL ASSOCIATION (SMACNA)

SMACNA Install Fire Damp HVAC	(1992) Fire, Smoke and Radiation Damper Installation Guide for HVAC Systems
SMACNA HVAC Duct Const Stds	(1995; Addenda Nov 1997) HVAC Duct Construction Standards - Metal and Flexible

SMACNA Leakage Test Mnl	(1985) HVAC Air Duct Leakage Test Manual

UNDERWRITERS LABORATORIES (UL)

UL 181	(1996; Rev Oct 1996) Factory-Made Air Ducts and Air Connectors
UL 214	(1997) Tests for Flame-Propagation of Fabrics and Films
UL 555	(1995) Fire Dampers
UL 586	(1996) High-Efficiency, Particulate, Air Filter Units
UL 900	(1994; Rev thru Apr 1997) Test Performance of Air Filter Units
UL Bld Mat Dir	(1998) Building Materials Directory
UL Elec Const Dir	(1997; Supple) Electrical Construction Equipment Directory
UL Fire Resist Dir	(1997) Fire Resistance Directory (2 Vol.)

1.2 COORDINATION OF TRADES

Ductwork, piping offsets, fittings, and accessories shall be furnished as required to provide a complete installation and to eliminate interference with other construction.

1.3 DELIVERY AND STORAGE

Equipment delivered and placed in storage shall be stored with protection from the weather, humidity and temperature variations, dirt and dust, or other contaminants.

1.4 SUBMITTALS

Government approval is required for submittals with a "GA" designation; submittals having an "FIO" designation are for information only. The following shall be submitted in accordance with Section 01330 SUBMITTAL PROCEDURES:

SD-01 Data

Components and Equipment Data; GA1.

Manufacturer's catalog data shall be included with the detail drawings for the following items. The data shall be highlighted to show model, size, options, etc., that are intended for consideration. Data shall be adequate to demonstrate compliance with contract requirements for the following:

a. Piping Components

b. Ductwork Components

c. Air Systems Equipment

d. Air Handling Units

e. Energy Recovery Devices

f. Terminal Units

SD-06 Instructions

Test Procedures; FIO.

Proposed test procedures for piping hydrostatic test, ductwork leak test, and performance tests of systems, at least 2 weeks prior to the start of related testing.

Welding Procedures; FIO.

A copy of qualified welding procedures, at least 2 weeks prior to the start of welding operations.

System Diagrams; GA1.

Proposed diagrams, at least 2 weeks prior to start of related testing. System diagrams that show the layout of equipment, piping, and ductwork, and typed condensed operation manuals explaining preventative maintenance procedures, methods of checking the system for normal, safe operation, and procedures for safely starting and stopping the system shall be framed under glass or laminated plastic. After approval, these items shall be posted where directed.

SD-07 Schedules

Test Schedules; FIO.

Proposed test schedules for hydrostatic test of piping, ductwork leak test, and performance tests, at least 2 weeks prior to the start of related testing.

Field Training Schedule; FIO.

Proposed schedule for field training, at least 2 weeks prior to the start of related training.

SD-08 Statements

Similar Services; FIO.

Statement demonstrating successful completion of similar services on at least 5 projects of similar size and scope, at least 2 weeks prior to submittal of other items required by this section.

SD-09 Reports

Test Reports; FIO.

Test reports for the piping hydrostatic test, ductwork leak test, and performance tests in booklet form, upon completion of testing. Reports shall document phases of tests performed including initial test summary, repairs/adjustments made, and final test results.

SD-13 Certificates

Bolts; FIO.

Written certification from the bolt manufacturer that the bolts furnished comply with the requirements of this specification. The certification shall include illustrations of product markings, and the number of each type of bolt to be furnished.

SD-19 Operation and Maintenance Manuals

Air Supply, Distribution, Ventilation, and Exhaust Manuals; FIO.

Six manuals listing step-by-step procedures required for system startup, operation, shutdown, and routine maintenance, at least 2 weeks prior to field training. The manuals shall include the manufacturer's name, model number, parts list, list of parts and tools that should be kept in stock by the owner for routine maintenance including the name of a local supplier, simplified wiring and controls diagrams, troubleshooting guide, and recommended service organization (including address and telephone number) for each item of equipment. Each service organization submitted shall be capable of providing 4 hour onsite response to a service call on an emergency basis.

PART 2 PRODUCTS

2.1 STANDARD PRODUCTS

Components and equipment shall be standard products of a manufacturer regularly engaged in the manufacturing of products that are of a similar material, design and workmanship. The standard products shall have been in satisfactory commercial or industrial use for 2 years before bid opening. The 2-year experience shall include applications of components and equipment under similar circumstances and of similar size. The 2 years must be satisfactorily completed by a product which has been sold or is offered for sale on the commercial market through advertisements, manufacturers' catalogs, or brochures. Products having less than a 2-year field service record will be acceptable if a certified record of satisfactory field operation, for not less than 6000 hours exclusive of the manufacturer's factory tests, can be shown. The equipment items shall be supported by a service organization.

2.2 ASBESTOS PROHIBITION

Asbestos and asbestos-containing products shall not be used.

2.3 NAMEPLATES

Equipment shall have a nameplate that identifies the manufacturer's name, address, type or style, model or serial number, and catalog number.

2.4 EQUIPMENT GUARDS AND ACCESS

Belts, pulleys, chains, gears, couplings, projecting setscrews, keys, and other rotating parts exposed to personnel contact shall be fully enclosed or guarded according to OSHA requirements. High temperature equipment and piping exposed to contact by personnel or where it creates a potential fire hazard shall be properly guarded or covered with insulation of a type specified.

2.5 Not Used

2.6 ELECTRICAL WORK

Electrical motor-driven equipment specified shall be provided complete with motor, motor starter, and controls. Unless otherwise specified, electric equipment, including wiring and motor efficiencies, shall be according to Section 16415 ELECTRICAL WORK, INTERIOR. Electrical characteristics and enclosure type shall be as shown. Unless otherwise indicated, motors of 1 hp and above shall be high efficiency type. Motor starters shall be provided complete with thermal overload protection and other appurtenances necessary. Each motor shall be according to NEMA MG 1 and shall be of sufficient size to drive the equipment at the specified capacity without exceeding the nameplate rating of the motor. Manual or automatic control and protective or signal devices required for the operation specified, and any control wiring required for controls and devices, but not shown, shall be provided. Where two-speed or variable-speed motors are indicated, solid-state variable-speed controller may be provided to accomplish the same function. Solid-state variable-speed controllers shall be utilized for motors rated 10 hp or less. Adjustable frequency drives shall be used for larger motors.

2.7 CONTROLS

Controls shall be provided as specified in Section 15950 HEATING, VENTILATING AND AIR CONDITIONING (HVAC) CONTROL SYSTEMS.

2.8 DUCTWORK COMPONENTS

2.8.1 Metal Ductwork

All aspects of metal ductwork construction, including all fittings and components, shall comply with SMACNA HVAC Duct Const Stds unless otherwise specified. Elbows shall be radius type with a centerline radius of 1-1/2 times the width or diameter of the duct where space permits. Otherwise, elbows having a minimum radius equal to the width or diameter of the duct or square elbows with factory fabricated turning vanes may be used. Static pressure Class 1/2, 1, and 2 inch w.g. ductwork shall meet the requirements of Seal Class C. Class 3 through 10 inch shall meet the requirements of Seal Class A. Sealants shall conform to fire hazard classification specified in Section 15080 THERMAL INSULATION FOR MECHANICAL SYSTEMS. Pressure sensitive tape shall not be used as a sealant. Spiral lock seam duct, and flat oval shall be made with duct sealant and locked with not less than 3 equally spaced drive screws or other approved methods indicated in SMACNA HVAC Duct Const Stds. The sealant shall be applied to the exposed male part of the fitting collar so that the sealer will be on the inside of the joint and fully protected by the metal of the duct fitting. One brush coat of the sealant shall be applied over the outside of the joint to at least 2 inch band width covering all screw heads and joint gap. Dents in the male portion of the slip fitting collar will not be acceptable. Outdoor air intake ducts and plenums shall be fabricated with watertight soldered or brazed joints and seams.

2.8.1.1 Transitions

Diverging air flow transitions shall be made with each side pitched out a maximum of 15 degrees, for an included angle of 30 degrees. Transitions for converging air flow shall be made with each side pitched in a maximum of 30 degrees, for an included angle of 60 degrees, or shall be as indicated. Factory-fabricated reducing fittings for systems using round duct sections when formed to the shape of the ASME short flow nozzle, need not comply with the maximum angles specified.

2.8.1.2 Not Used

2.8.1.3 Insulated Nonmetallic Flexible Duct Runouts

Flexible duct runouts shall be used only where indicated. Runout length shall in no case exceed 5 feet. Runouts shall be preinsulated, factory fabricated, and shall comply with NFPA 90A and UL 181. Either field or factory applied vapor barrier shall be provided. Where coil induction or high velocity units are supplied with vertical air inlets, a streamlined and vaned and mitered elbow transition piece shall be provided for connection to the flexible duct or hose. The last elbow to these units, other than the vertical air inlet type, shall be a die-stamped elbow and not a flexible connector. Insulated flexible connectors may be used as runouts. The insulated material and vapor barrier shall conform to the requirements of Section 15080 THERMAL INSULATION FOR MECHANICAL SYSTEMS. The insulation material surface shall not be exposed to the air stream.

2.8.1.4 General Service Duct Connectors

A flexible duct connector approximately 6 inches in width shall be provided where sheet metal connections are made to fans or where ducts of dissimilar metals are connected. For round/oval ducts, the flexible material shall be secured by stainless steel or zinc-coated, iron clinch-type draw bands. For rectangular ducts, the flexible material locked to metal collars shall be installed using normal duct construction methods. The composite connector system shall comply with UL 214 and be classified as "flame-retarded fabrics" in UL Bld Mat Dir.

2.8.2 Not Used

2.8.3 Ductwork Accessories

2.8.3.1 Duct Access Doors

Access doors shall be provided in ductwork and plenums where indicated and at all air flow measuring primaries, automatic dampers, fire dampers, coils, thermostats, and other apparatus requiring service and inspection in the duct system, and unless otherwise shown, shall conform to SMACNA Duct Const Stds. Access doors shall be provided upstream and downstream of air flow measuring primaries and heating and cooling coils. Doors shall be minimum 15 x 18 inches, unless otherwise shown. Where duct size will not accommodate this size door, the doors shall be made as large as practicable. Doors 24 x 24 inches or larger shall be provided with fasteners operable from both sides. Doors in insulated ducts shall be the insulated type.

2.8.3.2 Fire Dampers

Fire dampers shall be 1-1/2 hour fire rated unless otherwise indicated. Fire dampers shall conform to the requirements of NFPA 90A and UL 555. The Contractor shall perform the fire damper test as outlined in NFPA 90A. A pressure relief damper shall be provided upstream of the fire damper. If the ductwork connected to the fire damper is to be insulated then this pressure relief damper shall be factory insulated. Fire dampers shall be automatic operating type and shall have a dynamic rating suitable for the maximum air velocity and pressure differential to which it will be subjected. Fire dampers shall be approved for the specific application, and shall be installed according to their listing. Fire dampers shall be equipped with a steel sleeve or adequately sized frame installed in such a manner that disruption of the attached ductwork, if any, will not impair the operation of the damper. Sleeves or frames shall be equipped with perimeter mounting angles attached on both sides of the wall or floor opening. Ductwork in fire-rated floor-ceiling or roof-ceiling assembly systems with air ducts that pierce the ceiling of the assemblies shall be constructed in conformance with UL Fire Resist Dir. Fire dampers shall be curtain type out of the air stream or multi-blade type. Dampers shall not reduce the duct or the air transfer opening cross-sectional area. Dampers shall be installed so that the centerline of the damper depth or thickness is located in the centerline of the wall, partition or floor slab depth or thickness. Unless otherwise indicated, the installation details given in SMACNA Install Fire Damp HVAC and in manufacturer's instructions for fire dampers shall be followed.

2.8.3.3 Splitters and Manual Balancing Dampers

Splitters and manual balancing dampers shall be furnished with accessible operating mechanisms. Where operators occur in finished portions of the building, operators shall be chromium plated with all exposed edges rounded. Splitters shall be operated by quadrant operators or 3/16 inch rod brought through the side of the duct with locking setscrew and bushing. Two rods are required on splitters over 8 inches. Manual volume control dampers shall be operated by locking-type quadrant operators. Dampers and splitters shall be 2 gauges heavier than the duct in which installed. Unless otherwise indicated, multileaf dampers shall be opposed blade type with maximum blade width of 12 inches. Access doors or panels shall be provided for all concealed damper operators and locking setscrews. Unless otherwise indicated, the locking-type quadrant operators for dampers, when installed on ducts to be thermally insulated, shall be provided with stand-off mounting brackets, bases, or adapters to provide clearance between the duct surface and the operator not less than the thickness of the insulation. Stand-off mounting items shall be integral with the operator or standard accessory of the damper manufacturer. Volume dampers shall be provided where indicated.

2.8.3.4 Air Deflectors and Branch Connections

Air deflectors shall be provided at duct mounted supply outlets, at takeoff or extension collars to supply outlets, at duct branch takeoff connections, and at 90 degree elbows, as well as at locations as indicated on the drawings or otherwise specified. Conical branch connections or 45 degree entry connections may be used in lieu of deflectors or extractors for branch connections. All air deflectors, except those installed in 90 degree elbows, shall be provided with an approved means of adjustment. Adjustment shall be made from easily accessible means inside the duct or from an adjustment with sturdy lock on the face of the duct. When installed on ducts to be thermally insulated, external adjustments shall be provided with stand-off mounting brackets, integral with the adjustment

device, to provide clearance between the duct surface and the adjustment device not less than the thickness of the thermal insulation. Air deflectors shall be factory-fabricated units consisting of curved turning vanes or louver blades designed to provide uniform air distribution and change of direction with minimum turbulence or pressure loss. Air deflectors shall be factory or field assembled. Blade air deflectors, also called blade air extractors, shall be approved factory fabricated units consisting of equalizing grid and adjustable blade and lock. Adjustment shall be easily made from the face of the diffuser or by position adjustment and lock external to the duct. Stand-off brackets shall be provided on insulated ducts and are described herein. Fixed air deflectors, also called turning vanes, shall be provided in 90 degree elbows.

2.8.4 Duct Sleeves, Framed Prepared Openings, Closure Collars

2.8.4.1 Duct Sleeves

Duct sleeves shall be provided for round ducts 15 inches in diameter or less passing through floors, walls, ceilings, or roof, and installed during construction of the floor, wall, ceiling, or roof. Round ducts larger than 15 inches in diameter and square, rectangular, and oval ducts passing through floors, walls, ceilings, or roof shall be installed through framed prepared openings. The Contractor shall be responsible for the proper size and location of sleeves and prepared openings. Sleeves and framed openings are also required where grilles, registers, and diffusers are installed at the openings. Framed prepared openings shall be fabricated from 20 gauge galvanized steel, unless otherwise indicated. Where sleeves are installed in bearing walls or partitions, black steel pipe, ASTM A 53, Schedule 20 shall be used. Sleeve shall provide 1 inch clearance between the duct and the sleeve or 1 inch clearance between the insulation and the sleeve for insulated ducts.

2.8.4.2 Framed Prepared Openings

Openings shall have 1 inch clearance between the duct and the opening or 1 inch clearance between the insulation and the opening for insulated ducts.

2.8.4.3 Closure Collars

Collars shall be fabricated of galvanized sheet metal not less than 4 inches wide, unless otherwise indicated, and shall be installed on exposed ducts on each side of walls or floors where sleeves or prepared openings are provided. Collars shall be installed tight against surfaces. Collars shall fit snugly around the duct or insulation. Sharp edges of the collar around insulated duct shall be ground smooth to preclude tearing or puncturing the insulation covering or vapor barrier. Collars for round ducts 15 inches in diameter or less shall be fabricated from 20 gauge galvanized steel. Collars for round ducts larger than 15 inches and square, and rectangular ducts shall be fabricated from 18 gaugegalvanized steel. Collars shall be installed with fasteners on maximum 6 inch centers, except that not less than 4 fasteners shall be used.

2.8.5 Plenums and Casings for Field-Fabricated Units

2.8.5.1 Plenum and Casings

Plenums and casings shall be fabricated and erected as shown in SMACNA HVAC Duct Const Stds, as applicable. Unless otherwise indicated, system casing

shall be constructed of not less than 16 gauge galvanized sheet steel. Cooling coil drain pans with 1 inch threaded outlet shall be provided to collect condensation from the cooling coils. Drain pans shall be fabricated of not lighter than 16 gauge steel, galvanized after fabrication or of 18 gauge corrosion-resisting sheet steel conforming to ASTM A 167, Type 304, welded and stiffened. Drain pans exposed to the atmosphere shall be thermally insulated to prevent condensation. Insulation shall be coated with a flame resistant waterproofing material. Separate drain pans shall be provided for each vertical coil section, and a separate drain line shall be provided for each pan. Pans shall be generously sized to ensure capture of entrained moisture on the downstream-air side of the coil. Openings in the casing, such as for piping connections, shall be sealed and covered to prevent air leakage. Water seal for the drain shall provide at least 2 inch water gauge greater than the maximum negative pressure in the coil space.

2.8.5.2 Casing

Casings shall be terminated at the curb line and anchored by the use of galvanized angle iron sealed and bolted to the curb, as indicated in SMACNA HVAC Duct Const Stds.

2.8.5.3 Access Doors

Access doors shall be provided in each section of the casing. Door frames shall be welded in place, and each door shall be neoprene gasketed, hinged with minimum of two brass hinges, and fastened with a minimum of two brass tension fasteners operable from inside and outside of the casing. Where possible, doors shall be 36 x 18 inches located 18 inches above the floor. Where the space available will not accommodate doors of this size, doors as large as the space will accommodate shall be provided. Doors shall swing so that fan suction or pressure holds door in closed position, and shall be airtight. A push-button station to stop the supply fan shall be located inside the casing where indicated.

2.8.5.4 Factory-Fabricated Insulated Sheet Metal Panels

Factory-fabricated components may be used for field-assembled units, provided all requirements specified for field-fabricated plenums and casings are met. Panels shall be of modular design, pretested for structural strength, thermal control, condensation control, and acoustical control. Panel joints shall be sealed and insulated access doors shall be provided and gasketed to prevent air leakage. Panel construction shall be not less than 20 gauge galvanized sheet steel and shall be assembled with fasteners treated against corrosion. Standard length panels shall deflect not more than 1/2 inch under operation. Details of construction, including joint sealing, not specifically covered shall be as indicated in SMACNA HVAC Duct Const Stds. The plenums and casings shall be constructed to withstand the specified internal pressure of the air systems.

2.8.5.5 Not Used

2.8.6 Not Used

2.8.7 Diffusers, Registers, and Grilles

Units shall be factory-fabricated of steel, corrosion-resistant steel, or aluminum and shall distribute the specified quantity of air evenly over space intended without causing noticeable drafts, air movement faster than

50 fpm in occupied zone, or dead spots anywhere in the conditioned area. Outlets for diffusion, spread, throw, and noise level shall be as required for specified performance. Performance shall be certified according to ASHRAE 70. Inlets and outlets shall be sound rated and certified according to ASHRAE 70. Sound power level shall be as indicated. Diffusers and registers shall be provided with volume damper with accessible operator, unless otherwise indicated; or if standard with the manufacturer, an automatically controlled device will be acceptable. Volume dampers shall be opposed blade type for all diffusers and registers, except linear slot diffusers. Linear slot diffusers shall be provided with round or elliptical balancing dampers. Where the inlet and outlet openings are located less than 7 feet above the floor, they shall be protected by a grille or screen according to NFPA 90A.

2.8.7.1 Diffusers

Diffuser types shall be as indicated. Ceiling mounted units shall be furnished with anti-smudge devices, unless the diffuser unit minimizes ceiling smudging through design features. Diffusers shall be provided with air deflectors of the type indicated. Air handling troffers or combination light and ceiling diffusers shall conform to the requirements of UL Elec Const Dir for the interchangeable use as cooled or heated air supply diffusers or return air units. Ceiling mounted units shall be installed with rims tight against ceiling. Sponge rubber gaskets shall be provided between ceiling and surface mounted diffusers for air leakage control. Suitable trim shall be provided for flush mounted diffusers. Duct collar connecting the duct to diffuser shall be airtight and shall not interfere with volume controller. Return or exhaust units shall be similar to supply diffusers.

2.8.7.2 Registers and Grilles

Units shall be four-way directional-control type, except that return and exhaust registers may be fixed horizontal or vertical louver type similar in appearance to the supply register face. Registers shall be provided with sponge-rubber gasket between flanges and wall or ceiling. Wall supply registers shall be installed at least 6 inches below the ceiling unless otherwise indicated. Return and exhaust registers shall be located 6 inches above the floor unless otherwise indicated. Four-way directional control may be achieved by a grille face which can be rotated in 4 positions or by adjustment of horizontal and vertical vanes. Grilles shall be as specified for registers, without volume control damper.

2.8.8 Not Used

2.8.9 Air Vents, Penthouses, and Goosenecks

Air vents, penthouses, and goosenecks shall be fabricated from galvanized steel sheets with galvanized structural shapes. Sheet metal thickness, reinforcement, and fabrication shall conform to SMACNA HVAC Duct Const Stds. Louver blades shall be accurately fitted and secured to frames. Edges of louver blades shall be folded or beaded for rigidity and baffled to exclude driving rain. Air vents, penthouses, and goosenecks shall be provided with bird screen.

2.8.10 Bird Screens and Frames

Bird screens shall conform to ASTM E 437, Type I, Class 1, 2 by 2 mesh, 0.063 inch diameter aluminum wire or 0.031 inch diameter stainless steel

wire. Frames shall be removable type or stainless steel or extruded aluminum.

2.8.11 Not Used

2.9 AIR SYSTEMS EQUIPMENT

2.9.1 Fans

Fans shall be tested and rated according to AMCA ANSI/AMCA 210. Fans may be connected to the motors either directly or indirectly with V-belt drive. V-belt drives shall be designed for not less than 150percent of the connected driving capacity. Motor sheaves shall be variable pitch for 15 hp and below and fixed pitch as defined by ARI Guideline D. Variable pitch sheaves shall be selected to drive the fan at a speed which will produce the specified capacity when set at the approximate midpoint of the sheave adjustment. When fixed pitch sheaves are furnished, a replaceable sheave shall be provided when needed to achieve system air balance. Motors for V-belt drives shall be provided with adjustable rails or bases. Removable metal guards shall be provided for all exposed V-belt drives, and speed-test openings shall be provided at the center of all rotating shafts. Fans shall be provided with personnel screens or guards on both suction and supply ends, except that the screens need not be provided, unless otherwise indicated, where ducts are connected to the fan. Fan and motor assemblies shall be provided with vibration-isolation supports or mountings as indicated. Vibration-isolation units shall be standard products with published loading ratings. Each fan shall be selected to produce the capacity required at the fan static pressure indicated. Sound power level shall be as indicated. The sound power level values shall be obtained according to AMCA Std 300. Standard AMCA arrangement, rotation, and discharge shall be as indicated.

2.9.1.1 Centrifugal Fans

Centrifugal fans shall be fully enclosed, single-width single-inlet, or double-width double-inlet, AMCA Pressure Class I, II, or III as required or indicated for the design system pressure. Impeller wheels shall be rigidly constructed, accurately balanced both statically and dynamically. Fan blades may be forward curved, backward-inclined or airfoil design in wheel sizes up to 30 inches. Fan blades for wheels over 30 inches in diameter shall be backward-inclined or airfoil design These fans shall be suitable for conveying lint and the temperatures encountered. The fan shaft shall be provided with a heat slinger to dissipate heat buildup along the shaft. An access (service) door to facilitate maintenance shall be supplied with these fans. Fan wheels over 36 inches in diameter shall have overhung pulleys and a bearing on each side of the wheel. Fan wheels 36 inches or less in diameter may have one or more extra long bearings between the fan wheel and the drive. Bearings shall be sleeve type, self-aligning and self-oiling with oil reservoirs, or precision self-aligning roller or ball-type with accessible grease fittings or permanently lubricated type. Grease fittings shall be connected to tubing and serviceable from a single accessible point. Bearing life shall be L50 rated at not less than 200,000 hours as defined by AFBMA ANSI B3.15/AFBMA Std 9 and AFBMA ANSI B3.16/AFBMA Std 11. Fan shafts shall be steel, accurately finished, and shall be provided with key seats and keys for impeller hubs and fan pulleys. Each fan outlet shall be of ample proportions and shall be designed for the attachment of angles and bolts for attaching flexible connections. Motors, unless otherwise indicated, shall not exceed 1800 rpm and shall have totally enclosed enclosures. Motor starters shall be reduced-voltage-start

type with general-purpose enclosure.

2.9.1.2 In-Line Centrifugal Fans

In-line fans shall have centrifugal backward inclined blades, stationary discharge conversion vanes, internal and external belt guards, and adjustable motor mounts. Fans shall be mounted in a welded tubular casing. Air shall enter and leave the fan axially. Inlets shall be streamlined with conversion vanes to eliminate turbulence and provide smooth discharge air flow. Fan bearings and drive shafts shall be enclosed and isolated from the air stream. Fan bearings shall be sealed against dust and dirt and shall be permanently lubricated, and shall be precision self aligning ball or roller type. Bearing life shall be L50 rated at not less than 200,000 hours as defined by AFBMA ANSI B3.15/AFBMA Std 9 and AFBMA ANSI B3.16/AFBMA Std 11. Motors shall have totally enclosed enclosure.

2.9.1.3 Not Used

2.9.1.4 Not used

2.9.1.5 Not Used

2.9.1.6 Centrifugal Type Power Roof Ventilators

Fans shall be direct or V-belt driven with backward inclined, non-overloading wheel. Motor compartment housing shall be hinged or removable and weatherproof, constructed of heavy gauge aluminum. Fans shall be provided with birdscreen, disconnect switch, gravity dampers, roof curb, extended base. Motors enclosure shall be dripproof type.

2.9.1.7 Not Used

2.9.1.8 Not Used

2.9.1.9 Ceiling Exhaust Fans

Suspended cabinet-type ceiling exhaust fans shall be centrifugal type, direct-driven. Fans shall have acoustically insulated housing. Integral backdraft damper shall be chatter-proof. The integral face grille shall be of egg-crate design or louver design. Fan motors shall be mounted on vibration isolators. Unit shall be provided with mounting flange for hanging unit from above. Fans shall be U.L. listed.

2.9.2 Coils

Coils shall be fin-and-tube type constructed of seamless copper tubes and aluminum or copper fins mechanically bonded or soldered to the tubes. Copper tube wall thickness shall be a minimum of 0.016 inches. Aluminum fins shall be 0.0055 inch minimum thickness. Copper fins shall be 0.0045 inch minimum thickness. Casing and tube support sheets shall be not lighter than 16 gauge galvanized steel, formed to provide structural strength. When required, multiple tube supports shall be provided to prevent tube sag. Each coil shall be tested at the factory under water at not less than 400 psi air pressure and shall be suitable for 200 psi working pressure. Coils shall be mounted for counterflow service. Coils shall be rated and certified according to ARI ANSI/ARI 410.

2.9.2.1 Direct-Expansion Coils

Direct-expansion coils shall be suitable for the refrigerant involved. Suction headers shall be seamless copper tubing or seamless or resistance welded steel tube with copper connections. Supply headers shall consist of a distributor which shall distribute the refrigerant through seamless copper tubing equally to all circuits in the coil. Tubes shall be circuited to ensure minimum pressure drop and maximum heat transfer. Circuiting shall permit refrigerant flow from inlet to suction outlet without causing oil slugging or restricting refrigerant flow in coil. Each coil to be field installed shall be completely dehydrated and sealed at the factory upon completion of pressure tests.

2.9.2.2 Water Coils

Water coils shall be installed with a pitch of not less than 1/8 inch per foot of the tube length toward the drain end. Headers shall be constructed of cast iron, welded steel or copper. Each coil shall be provided with a plugged vent and drain connection extending through the unit casing.

2.9.3 Air Filters

Air filters shall be listed according to requirements of UL 900, except high efficiency particulate air filters of 99.97 percent efficiency by the DOP Test method shall be as listed under the Label Service and shall meet the requirements of UL 586.

2.9.3.1 Extended Surface Pleated Panel Filters

Filters shall be 2 inch depth, sectional, disposable type of the size indicated and shall have an average efficiency of 25 to 30 percent when tested according to ASHRAE 52.1. Initial resistance at 500 feet per minute shall not exceed 0.36 inches water gauge. Filters shall be UL Class 2. Media shall be nonwoven cotton and synthetic fiber mat. A wire support grid bonded to the media shall be attached to a moisture resistant fiberboard frame. All four edges of the filter media shall be bonded to the inside of the frame to prevent air bypass and increase rigidity.

2.9.3.2 Extended Surface Nonsupported Pocket Filters

Filters shall be 30 inch depth, sectional, replaceable dry media type of the size indicated and shall have an average efficiency of 80 to 85 percent when tested according to ASHRAE 52.1. Initial resistance at 500 feet per minute shall not exceed 0.45 inches water gauge. Filters shall be UL Class 1. Media shall be fibrous glass, supported in the air stream by a wire or non-woven synthetic backing and secured to a galvanized steel metal header. Pockets shall not sag or flap at anticipated air flows. Each filter shall be installed with an extended surface pleated panel filter as a prefilter in a factory preassembled, side access housing or a factory-made sectional frame bank, as indicated.

2.9.3.3 Not Used

2.9.3.4 Not Used

2.9.3.5 Not Used

2.9.3.6 Not Used

2.9.3.7 Not Used

2.9.3.8 Not Used

2.9.3.9 Holding Frames

Frames shall be fabricated from not lighter than 16 gauge sheet steel with rust-inhibitor coating. Each holding frame shall be equipped with suitable filter holding devices. Holding frame seats shall be gasketed. All joints shall be airtight.

2.9.3.10 Filter Gauges

Filter gauges shall be dial type, diaphragm actuated draft and shall be provided for all filter stations, including those filters which are furnished as integral parts of factory fabricated air handling units. Gauges shall be at least 3-7/8 inches in diameter, shall have white dials with black figures, and graduations,] and shall have a minimum range of 1 inch beyond the specified final resistance for the filter bank on which each gauge is applied. Each gauge shall incorporate a screw operated zero adjustment and shall be furnished complete with two static pressure tips with integral compression fittings, two molded plastic vent valves, two 5 foot minimum lengths of 1/4 inch diameter aluminum tubing, and all hardware and accessories for gauge mounting.

2.10 AIR HANDLING UNITS (3.1)

2.10.1 Not Used

2.10.2 Factory-Fabricated Air Handling Units

Not withstanding Section 00700 CONTRACT CLAUSES FAR 52.236-5 Material and Workmanship, AHU-2.1 and AHU-2.2 shall be manufactured by McQuay in order to be fully consistent with Phase 2 Lodging Facility. No other product will be acceptable. The Competition Advocate authorities sole source procurement. Units shall be as indicated. Units shall include fans, coils, airtight insulated casing, adjustable V-belt drives, belt guards for externally mounted motors, access sections where indicated, vibration-isolators, and appurtenances required for specified operation. Vibration isolators shall be as indicated. Each air handling unit shall have physical dimensions suitable to fit space allotted to the unit and shall have the capacity indicated. Air handling unit shall have published ratings based on tests performed according to ARI ANSI/ARI 430.

2.10.2.1 Casings

Casing sections shall be 2 inch double wall type constructed of a minimum 18 gauge galvanized steel, or 18 gauge steel outer casing protected with a corrosion resistant paint finish according to paragraph FACTORY PAINTING. Inner casing of double-wall units shall be minimum 20 gauge solid galvanized steel. Casing shall be designed and constructed with an integral structural steel frame such that exterior panels are non-load bearing. Exterior panels shall be individually removable. Removal shall not affect the structural integrity of the unit. Casings shall be provided with inspection doors, access sections, and access doors as indicated. Inspection and access doors shall be insulated, fully gasketed, double-wall type, of a minimum 18 gauge outer and 20 gauge inner panels. Doors shall be rigid and provided with heavy duty hinges and latches. Inspection doors shall be a minimum 12 inches wide by 12 inches high. Access doors shall be minimum 24 inches wide and shall be the full height of the unit casing or a minimum of 6 ft., whichever is less. A minimum 8 inches by 8 inches

sealed glass window suitable for the intended application shall be installed in all access doors. Access Sections shall be according to paragraph AIR HANDLING UNITS. Drain pan shall be double-bottom type constructed of 16 gauge galvanized steel, pitched to the drain connection. Drain pans shall be constructed water tight, treated to prevent corrosion, and designed for positive condensate drainage. When 2 or more cooling coils are used, with one stacked above the other, condensate from the upper coils shall not flow across the face of lower coils. Intermediate drain pans or condensate collection channels and downspouts shall be provided, as required to carry condensate to the unit drain pan out of the air stream and without moisture carryover. Each casing section handling conditioned air shall be insulated with not less than 1 inch thick, 1-1/2 pound density coated fibrous glass material having a thermal conductivity not greater than 0.23 Btu/hr-sf-F. Factory applied fibrous glass insulation shall conform to ASTM C 1071, except that the minimum thickness and density requirements do not apply, and shall meet the requirements of NFPA 90A. Foam-type insulation is not acceptable. Foil-faced insulation shall not be an acceptable substitute for use on double-wall access doors and inspections doors and casing sections. A latched and hinged inspection door, shall be provided in the fan and coil sections. Additional inspection doors, access doors and access sections shall be provided where indicated.

2.10.2.2 Heating and Cooling Coils

Coils shall be provided as specified in paragraph AIR SYSTEMS EQUIPMENT, for types indicated.

2.10.2.3 Not Used

2.10.2.4 Air Filters

Air filters shall be as specified in paragraph AIR SYSTEMS EQUIPMENT for types and thickness indicated.

2.10.2.5 Fans

Fans shall be double-inlet, centrifugal type with each fan in a separate scroll. Fans and shafts shall be dynamically balanced prior to installation into air handling unit, then the entire fan assembly shall be statically and dynamically balanced at the factory after it has been installed in the air handling unit. Fans shall be mounted on steel shafts accurately ground and finished. Fan bearings shall be sealed against dust and dirt and shall be precision self-aligning ball or roller type. Bearing life shall be L50 rated at not less than 200,000 hours as defined by AFBMA ANSI B3.15/AFBMA Std 9 and AFBMA ANSI B3.16/AFBMA Std 11. Bearings shall be permanently lubricated or lubricated type with lubrication fittings readily accessible at the drive side of the unit. Bearings shall be supported by structural shapes, or die formed sheet structural members, or support plates securely attached to the unit casing. Bearings may not be fastened directly to the unit sheet metal casing. Fans and scrolls shall be furnished with coating indicated. Fans shall be driven by a unit-mounted or a floor-mounted motor connected to fans by V-belt drive complete with belt guard for externally mounted motors. Belt guards shall be the three sided enclosed type with solid or expanded metal face. Belt drives shall be designed for not less than a 1.3 service factor based on motor nameplate rating. Motor sheaves shall be variable pitch for 25 hp and below and fixed pitch above 25 hp as defined by ARI Guideline D. Where fixed sheaves are required, variable pitch sheaves may be used during

air balance, but shall be replaced with an appropriate fixed sheave after air balance is completed. Variable pitch sheaves shall be selected to drive the fan at a speed that will produce the specified capacity when set at the approximate midpoint of the sheave adjustment. Motors for V-belt drives shall be provided with adjustable bases. Fan motors shall have totally enclosed enclosures. Unit fan or fans shall be selected to produce the required capacity at the fan static pressure. Sound power level shall be as indicated. The sound power level values shall be obtained according to AMCA Std 300 or ASHRAE ANSI/ASHRAE 68.

2.10.2.6 Access Sections and Filter/Mixing Boxes

Access sections shall be provided where indicated and shall be furnished with access doors as shown. Access sections and filter/mixing boxes shall be constructed in a manner identical to the remainder of the unit casing and shall be equipped with access doors.

2.10.2.7 Not Used

2.10.2.8 Dampers

Dampers shall be as specified in paragraph CONTROLS.

2.11 TERMINAL UNITS

2.11.1 Not Used

2.11.2 Not Used

2.11.3 Not Used

2.12 ENERGY RECOVERY DEVICES

2.12.1 Energy Wheel

Unit shall be a factory fabricated and tested assembly for air-to-air energy recovery by transfer of sensible heat from exhaust air to supply air stream. Device performance shall be according to ASHRAE 84. Device shall deliver an energy transfer effectiveness of not less than 50 percent with cross-contamination not in excess of 0.1 percent of exhaust airflow rate at system design differential pressure, including purging sector if provided with wheel. Exchange media shall be chemically inert, moisture-resistant, fire-retardant, laminated, nonmetallic material which complies with NFPA 90A. Exhaust and supply streams shall be isolated by seals which are static, field adjustable, and replaceable. Chain drive mechanisms shall be fitted with ratcheting torque limiter or slip-clutch protective device. Enclosure shall be fabricated from galvanized steel and shall include maintenance access provisions. Recovery control and rotation failure provisions shall be as indicated.

Media Cleaning - The media is cleanable with low temperature steam, hot water or light detergent, without degrading the latent recovery. Dry particles up to 800 microns will freely pass through the media.

Purge Sector - The unit is provided with a factory set, field adjustable purge sector designed to limit cross contamination to less than .04 percent

of that of the exhaust airstream concentration when operated under appropriate conditions.

Rotor Support System - The rotor media is provided in segmented fashion to allow for field erection or replacement of one section at a time without requiring side access. The media is rigidly held by a structural spoke system made of extruded aluminum.

Rotor Housing - The rotor housing is a structural framework which limits the deflection of the rotor tip due to air pressure loss to less than 1/32". The housing is made of galvanized steel to prevent corrosion. The rotor is supported by two pillow block bearings, which can be maintained or replaced without the removal of the rotor from its casing or the media from its spoke system.

Drive System - The rotor is driven by a link belt system. A/C motors are utilized for both constant and variable speed applications.

Temperature Control Panel – Variable speed control shall be accomplished by the use of an A/C inverter. A speed adjustment pot is mounted on the front of the enclosure. The drive system will allow for a turndown ratio of 80:1 (20 rpm to 1/4 rpm). The control system will include four linearized thermistor sensors as follows: (1) Proportional temperature controller mounted in the supply airstream. (2) differential summer/winter changeover sensors mounted in the outdoor and return airstreams. (3) Frost prevention sensor located in the exhaust airstream. (4) Digital readout of the temperature readings recorded by these sensors and control setpoints is displayed by the control panel.

Sequence of Operation Variable Speed Controller

The factory mounted standalone controller shall be capable of controlling and displaying the following modes of operation. The setpoints shall be field adjustable.

Cooling Mode – The variable speed drive will operate at maximum rotational speed (20 RPM) to provide the maximum amount of precoditioning to the outside air.

Economizer Mode – The variable speed drive will slow the wheel to 1 RPM to effectively eliminate any heat transfer. By maintaining a minimal rotational speed, the wheel continuous to be cleaned by the counter flow movement of airflow in the purge section.

Discharge Air Control – The variable speed drive will be controlled during the intermediate season to maintain a temperature no greater than the discharge air control setpoint. This point is a field programable setpoint.

Frost Mode – The variable speed drive shall monitor the condition of the leaving exhaust air condition off of the wheel and will slow the wheel rotation to maintain frost free operation.

Digital Performance Display Module - Digital read out confirming the effectiveness of the energy wheel via temperature readings recorded by these sensors and control set points will be displayed by the control panel.

Rotation Detector – The heat wheel shall have a binary sensor that will indicate if rotation is lost on the heat wheel. This sensor can interface with an alarm or secondary DDC control system.

Sole and Exclusive Warranty - Heat wheel manufacture warrants to buyer that for a period of eighteen months from the date of shipment by heat wheel manufacture the goods to be delivered to buyer will in all material respects be free from defects in material and workmanship when used in a proper and normal manner. Should any failure to conform to the above appear within eighteen months after the date of shipment by heat wheel manufacture (the "limited warranty period"), heat wheel manufacture agrees upon prompt notification thereof during the limited warranty period and confirmation to heat wheel manufacture's satisfaction that the goods have been stored, installed, operated and maintained properly and in accordance with standard industry practice, to correct the non-conformity at heat wheel manufacture's option either by repairing any defective part or parts or by making available at heat wheel manufacture's plant a repaired or replacement part.

Factory Startup – A manufacture's service representative shall be present at the time of startup to assure a proper installation and setup. The technician will verify that the following startup duties have been performed: shipping braces have been removed, wheel rotation is proper, labyrinth seals adjusted properly, wheel purge calibrated for proper operation, verify control wiring is correct, verify proper operation of VFD, measure PD across wheel to confirm performance, and setup VFD controller. In addition to startup the factory representative will provide owner with a complete walkthrough of operation and maintenance procedures.

2.12.2 Not Used

2.12.3 Not Used

2.13 FACTORY PAINTING

Units which are not of galvanized construction according to ASTM A 123/A 123M or ASTM A 924/A 924M shall be factory painted with a corrosion resisting paint finish. Internal and external ferrous metal surfaces shall be cleaned, phosphatized and coated with a paint finish which has been tested according to ASTM B 117, ASTM D 1654, and ASTM D 3359. Evidence of satisfactory paint performance for a minimum of 125 hours for units to be installed indoors and 500 hours for units to be installed outdoors shall be submitted. Rating of failure at the scribe mark shall be not less than 6, average creepage not greater than 1/8 inch. Rating of the inscribed area shall not be less than 10, no failure. On units constructed of galvanized steel which have been welded, exterior surfaces of welds or welds that have burned through from the interior shall receive a final shop docket of zinc-rich protective paint according to ASTM D 520 Type I.

PART 3 EXECUTION

3.1 INSTALLATION

Work shall be installed as shown and according to the manufacturer's diagrams and recommendations.

3.1.1 Not Used3.1.1.1 3.1.2 Not Used3.1.2.1 [Enter Appropriate Subpart Title Here]

3.1.3 Not Used

3.1.4 Not Used

3.1.4.1 Not Used

3.1.4.2 Not Used

3.1.4.3 Not Used

3.1.5 Condensate Drain Lines

Water seals shall be provided in the condensate drain from all units. The depth of each seal shall be 2 inches plus the number of inches, measured in water gauge, of the total static pressure rating of the unit to which the drain is connected. Water seals shall be constructed of 2 tees and an appropriate U-bend with the open end of each tee plugged. Pipe cap or plug cleanouts shall be provided where indicated. Drains indicated to connect to the sanitary waste system shall be connected by an indirect waste fitting. Air conditioner drain lines shall be insulated as specified in Section 15080 THERMAL INSULATION FOR MECHANICAL SYSTEMS.

3.1.6 Not Used

3.1.7 Air Vents and Drains

3.1.7.1 Vents

Air vents shall be provided at high points, on water coils, and where indicated to ensure adequate venting of the piping system.

3.1.7.2 Drains

Drains shall be provided at low points and where indicated to ensure complete drainage of the piping. Drains shall be accessible, and shall consist of nipples and caps or plugged tees unless otherwise indicated.

3.1.8 Valves

Isolation gate or ball valves shall be installed on each side of each piece of equipment such as pumps, heaters, heating or cooling coils, and other similar items, at the midpoint of all looped mains, and at any other points indicated or required for draining, isolating, or sectionalizing purposes. Isolation valves may be omitted where balancing cocks are installed to provide both balancing and isolation functions. Each valve except check valves shall be identified. Valves in horizontal lines shall be installed with stems horizontal or above.

3.1.9 Equipment and Installation

Frames and supports shall be provided for tanks, compressors, pumps, valves, air handling units, fans, coils, dampers, and other similar items requiring supports. Air handling units shall be floor mounted or ceiling hung, as indicated. The method of anchoring and fastening shall be as detailed. Floor-mounted equipment, unless otherwise indicated, shall be set on not less than 6 inch concrete pads or curbs doweled in place. Concrete foundations for circulating pumps shall be heavy enough to minimize the intensity of the vibrations transmitted to the piping and the surrounding structure, as recommended in writing by the pump manufacturer. In lieu of a concrete pad foundation, a concrete pedestal block with isolators placed between the pedestal block and the floor may be provided. The concrete foundation or concrete pedestal block shall be of a mass not less than three times the weight of the components to be supported. Lines

connected to the pump mounted on pedestal blocks shall be provided with flexible connectors. Foundation drawings, bolt-setting information, and foundation bolts shall be furnished prior to concrete foundation construction for all equipment indicated or required to have concrete foundations. Concrete for foundations shall be as specified in Section 03300 CAST-IN-PLACE STRUCTURAL CONCRETE.

3.1.10 Access Panels

Access panels shall be provided for concealed valves, vents, controls, dampers, and items requiring inspection or maintenance. Access panels shall be of sufficient size and located so that the concealed items may be serviced and maintained or completely removed and replaced. Access panels shall be as specified in Section 05500 MISCELLANEOUS METALS.

3.1.11 Flexible Connectors

Pre-insulated flexible connectors and flexible duct shall be attached to other components in accordance with the latest printed instructions of the manufacturer to ensure a vapor tight joint. Hangers, when required to suspend the connectors, shall be of the type recommended by the connector or duct manufacturer and shall be provided at the intervals recommended.

3.1.12 Sleeved and Framed Openings

Space between the sleeved or framed opening and the duct or the duct insulation shall be packed as specified in Section 07840 FIRESTOPPING for fire rated penetrations. For non-fire rated penetrations, the space shall be packed as specified in Section 07900 JOINT SEALING.

3.1.13 Metal Ductwork

Installation shall be according to SMACNA HVAC Duct Const Stds unless otherwise indicated. Duct supports for sheet metal ductwork shall be according to SMACNA HVAC Duct Const Stds, unless otherwise specified. Friction beam clamps indicated in SMACNA HVAC Duct Const Stds shall not be used. Risers on high velocity ducts shall be anchored in the center of the vertical run to allow ends of riser to move due to thermal expansion. Supports on the risers shall allow free vertical movement of the duct. Supports shall be attached only to structural framing members and concrete slabs. Supports shall not be anchored to metal decking unless a means is provided and approved for preventing the anchor from puncturing the metal decking. Where supports are required between structural framing members, suitable intermediate metal framing shall be provided. Where C-clamps are used, retainer clips shall be provided.

3.1.14 Not Used

3.1.15 Not Used

3.1.16 Not Used

3.1.17 Not Used

3.1.18 Dust Control

To prevent the accumulation of dust, debris and foreign material during construction, temporary dust control protection shall be provided. The distribution system (supply and return) shall be protected with temporary

seal-offs at all inlets and outlets at the end of each day's work. Temporary protection shall remain in place until system is ready for startup.

3.1.19 Insulation

Thickness and application of insulation materials for ductwork, piping, and equipment shall be according to Section 15080 THERMAL INSULATION FOR MECHANICAL SYSTEMS. Outdoor air intake ducts and plenums shall be externally insulated up to the point where the outdoor air reaches the air handling unit.

3.1.20 Duct Test Holes

Holes with closures or threaded holes with plugs shall be provided in ducts and plenums as indicated or where necessary for the use of pitot tube in balancing the air system. Extensions, complete with cap or plug, shall be provided where the ducts are insulated.

3.1.21 Not Used

3.1.22 Power Transmission Components Adjustment

V-belts and sheaves shall be tested for proper alignment and tension prior to operation and after 72 hours of operation at final speed. Belts on drive side shall be uniformly loaded, not bouncing. Alignment of direct driven couplings shall be to within 50 percent of manufacturer's maximum allowable range of misalignment.

3.2 FIELD PAINTING AND PIPING IDENTIFICATION

Finish painting of items only primed at the factory or surfaces not specifically noted otherwise and identification for piping are specified in Section 09900 PAINTING, GENERAL.

3.3 Not Used

3.4 DUCTWORK LEAK TEST

Ductwork leak test shall be performed for the entire air distribution and exhaust system, including fans, coils, filters, etc.. Test procedure, apparatus, and report shall conform to SMACNA Leakage Test Mnl. The maximum allowable leakage rate is 5% of maximum design airflow for each air handling unit.. Ductwork leak test shall be completed with satisfactory results prior to applying insulation to ductwork exterior.

3.5 CLEANING AND ADJUSTING

Pipes shall be cleaned free of scale and thoroughly flushed of foreign matter. A temporary bypass shall be provided for water coils to prevent flushing water from passing through coils. Strainers and valves shall be thoroughly cleaned. Prior to testing and balancing, air shall be removed from water systems by operating the air vents. Temporary measures, such as piping the overflow from vents to a collecting vessel shall be taken to avoid water damage during the venting process. Air vents shall be plugged or capped after the system has been vented. Inside of room fan-coil units ducts, plenums, and casing shall be thoroughly cleaned of debris and blown free of small particles of rubbish and dust and then shall be vacuum cleaned before installing outlet faces. Equipment shall be wiped clean,

with traces of oil, dust, dirt, or paint spots removed. Temporary filters shall be provided prior to startup of all fans that are operated during construction, and new filters shall be installed after all construction dirt has been removed from the building, and the ducts, plenums, casings, and other items specified have been vacuum cleaned. System shall be maintained in this clean condition until final acceptance. Bearings shall be properly lubricated with oil or grease as recommended by the manufacturer. Belts shall be tightened to proper tension. Control valves and other miscellaneous equipment requiring adjustment shall be adjusted to setting indicated or directed. Fans shall be adjusted to the speed indicated by the manufacturer to meet specified conditions.

3.6 TESTING, ADJUSTING, AND BALANCING

Testing, adjusting, and balancing shall be as specified in Section y15990 TESTING, ADJUSTING AND BALANCING OF HVAC SYSTEMS. Testing, adjusting, and balancing shall begin only when the air supply and distribution, including controls, has been completed, with the exception of performance tests.

3.7 PERFORMANCE TESTS

After testing, adjusting, and balancing has been completed as specified, each system shall be tested as a whole to see that all items perform as integral parts of the system and temperatures and conditions are evenly controlled throughout the building. Corrections and adjustments shall be made as necessary to produce the conditions indicated or specified. Capacity tests and general operating tests shall be conducted by an experienced engineer. Tests shall cover a period of not less than 5 days for each system and shall demonstrate that the entire system is functioning according to the specifications. Coincidental chart recordings shall be made at points indicated on the drawings for the duration of the time period and shall record the temperature at space thermostats or space sensors, the humidity at space humidistats or space sensors and the ambient temperature and humidity in a shaded and weather protected area.

3.8 FIELD TRAINING

The Contractor shall conduct a training course for operating and maintenance personnel as designated by the Contracting Officer. Training shall be provided for a period of 40 hours of normal working time and shall start after the system is functionally complete but prior to the performance tests. The field instruction shall cover all of the items contained in the approved Operating and Maintenance Instructions.

-- End of Section --

SECTION TABLE OF CONTENTS

DIVISION 15 - MECHANICAL

SECTION 15950

HVAC SEQUENCE OF OPERATION

8/99

PART 1 GENERAL

1.1 GENERAL

PART 2 PRODUCTS

2.1 PRODUCTS

PART 3 EXECUTION

3.1 HVAC CONTROL SEQUENCES
3.1.1 Packaged Terminal Air Conditioner (PTAC) Control Sequence
3.1.2 Air Cooled Condensing Unit (ACCU) Control Sequence
3.1.3 Air Handling Unit AHU-2.1 Control:
3.1.4 Air Handling Unit AHU-3.2 Control
3.1.5 Smoke/Fire Alarm Mode Control
3.1.6 Hydronic Unit Heater Control
3.1.7 [Enter Appropriate Subpart Title Here]

WARNING: Text in tags exceeds the maximum length of 300 characters

3.1.8 Electric Cabinet Unit Heater Control
3.1.9 Exhaust Fan EF-2.2 Control
3.1.10 Exhaust Fan EF-2.1, 2.4 and 2.5
3.1.11 Exhaust Fan EF-2.6 Control Exhaust fan shall be controlled by a wall-mounted switch located near the door to the room.

-- End of Section Table of Contents --

SECTION 15950

HVAC SEQUENCE OF OPERATION
8/99

PART 1 GENERAL

1.1 GENERAL

Control Sequence: Manner and chronological sequence in which, and methods by which, automatic temperature controls shall function.

A specified temperature followed by (FA) shall mean this setpoint temperature can be adjusted (re-set) manually through the Building Automation System (BAS) to another setpoint temperature if so desired by Government.

PART 2 PRODUCTS

2.1 PRODUCTS

See drawings and applicable specifications.

PART 3 EXECUTION

3.1 HVAC CONTROL SEQUENCES

3.1.1 Packaged Terminal Air Conditioner (PTAC) Control Sequence

a. Units shall be controlled by programmable thermostatwith temperature setback/set-up over a seven day period.

b. PTAC units shall have setback/set-up strategy which shall be initiated by a front-desk central "check-in" control system as part of the (BAS), that allows 24-hour setback/set-up control for vacant rooms. The system will setback the PTAC's such that cooling operations are locked out and a minimum heating setback temperature of 60 deg. F (FA) is maintained in unoccupied rooms.

c. PTAC units installed under phase one contract shall be upgrade with front desk control as part of this contract. Contact Government Contracting Officer for information on PTAC units installed under phase one contract.

3.1.2 Air Cooled Condensing Unit (ACCU) Control Sequence

Each air cooled condensing unit has packaged operating and safety automatic control furnished by unit manufacturer.

Provide low ambient lockout so that when O.A. temperature rises above 55 deg. F. (FA), condensing unit shall be allowed to operate as required by cooling demand. On ACCU-2.1, when O.A. temperature drops below 55 deg. F.

(FA), condensing unit shall not operate and solenoid valves and hot gas bypass valve shall remain closed.

Interlock condensing unit to associated air handling unit so that condensing unit is operative only when associated air handling unit is operating.

Refrigerant flow:

ACCU-2.1 flow of refrigerant to direct expansion coil shall be by solenoid valve controlled by ductstat in exhaust air plenum. Ductstat controller shall be field adjustable and set to maintain temperature of 75 deg. F. (FA).

ACCU-2.2 flow of refrigerant to direct expansion coil shall be by solenoid valve in response to space thermostat.

Provide interlock with associated air handling unit low limit discharge controller which will not allow air handling unit to discharge air at temperature below 50 deg F.

3.1.3 Air Handling Unit AHU-2.1 Control:

General:

System is designed as heating-cooling-energy recovery, variable air volume system.

System is designed for sleeping quarters toilet room exhaust and associated make-up air, with energy recovery at air handling unit enthalpy wheel.

System fans consists of packaged air handling unit supply fan and associated exhaust fan.

Unit Operating Mode:

Unit operation shall be automatic and activated through Building Automation System (BAS). BAS will program time initiated functions, seasonal changeover, field adjustable settings, and any functions compatible with systems interface. Controls Contractor shall provide all necessary devices required for complete interface between BAS and air handling units and associated air cooled condensing units.

System shall operate with two operating modes; occupied cycle and unoccupied cycle.

In addition to the normal operating modes, system shall be provided with an emergency smoke control operating mode.

Interlocking:

Interlock exhaust fan with supply fan whenever supply fan is off, exhaust fan shall be off.

Interlock exhaust fan EF-2.2 with AHU 2.1

Occupied and Unoccupied Operation:

During occupied cycle, unit supply fan shall run continuously, and outside air damper shall be fully open

Whenever unit supply fan stops, outside air damper and exhaust air damper shall close.

Supply Air Volume Control:

System volume control will be accomplished by variable frequency drives as specified in Section 16485.

Arrange controls so that fans will always start on low speed. On failure of fan volume control signal, fans shall go to low speed and stop.

Provide appropriate electrical signal input to speed control devices and necessary devices such as transducer.

Provide static pressure sensing at each of the branch ducts (total of two) near motor operated isolation dampers in corridor ceiling plenum. Pressure controller shall modulate supply fan volume control device to maintain set static pressure of 0.15 inches W.C. (FA) from pressure sensing station requiring most air volume.

Exhaust Air Volume Control:

System volume control will be accomplished by variable frequency drives as specified in Section 16485.

Arrange controls so that fans will always start on low speed. On failure of fan volume control signal, fans shall go to low speed and stop.

Provide appropriate electrical signal input to speed control devices and necessary devices such as transducer.

Return fan shall track supply fan operation, and shall run at an off-set speed 5% less than that of supply.

Smoke Control:

Refer to Smoke/Fire Alarm mode below.

Miscellaneous:

Provide high static pressure limit control with sensor located in unit supply and exhaust discharge to override respective fan volume control when pressure reaches 2 inches W.G. (FA).

Provide low static pressure limit control with sensor located in inlet duct to supply and exhaust fan to override respective fan volume control when pressure falls below 1 inches W.G. (FA)

Provide differential pressure sensor across filter section to alarm BAS when differential pressure exceeds 1 inch W.C. (FA).

Energy Recovery/Enthalpy Wheel:

Speed control, freeze protection, and purge requirements shall be internal to unit and shall be by air handling unit manufacturer, as required to satisfy scheduled coil entering air temperature values.

Alarm freezer protection to B.A.S.

3.1.4 Air Handling Unit AHU-3.2 Control

General:

System is designed as heating-cooling, single zone, constant volume system.

System is designed for fixed minimum outside air.

System fan consists of packaged air handling unit supply fan.

Unit Operating Mode:

Unit operation shall be automatic and activated through Building Automation System (BAS). BAS will program time initiated functions, seasonal changeover, field adjustable settings, and any functions compatible with systems interface. Controls Contractor shall provide all necessary devices required for complete interface between BAS and air handling units and associated air cooled condensing units.

System shall operate with two operating modes; occupied cycle and unoccupied cycle.

In addition to the normal operating modes, system shall be provided with an emergency smoke control operating mode.

Occupied and Unoccupied Operation:

During occupied cycle, unit supply fan shall run continuously with minimum outside air damper fully open. During unoccupied cycle, unit supply fan shall operate intermittently as required to satisfy unoccupied set point temperature with 100% recirculated air.

During unoccuped cycle, space thermostats shall maintain unoccupied cycle set pont temperatures.

Whenever unit supply fan stops, outside air dampers shall fully close.

Unit Discharge Air Temperature Control:

Unit discharge air controller shall be submaster reset by room thermostat.

Unit discharge air temperature sensor shall serve as low limit. It shall override discharge air controller to assure minimum air temperature of 50 F(FA). Alarm to BAS at 50 deg. F. (FA) and open heating coil valve at 38 deg F.

Provide return air humidity sensor to act as high limit override. If return air relative humidity exceeds 50% (FA), unit discharge air temperature shall be reset downward to maintain 50% relative humidity.

Smoke Control:

Refer to Smoke/Fire Alarm Mode below.

3.1.5 Smoke/Fire Alarm Mode Control

Smoke Detectors in Ductwork:

Smoke detectors will be furnished, installed, and wired to Fire Alarm Control Panel by Electrical Contractor.

Wire auxiliary contact on smoke detector to air handling unit supply fan starter.

Each air handling unit's smoke detector(s) upon detection of smoke shall stop its respective air handling unit and close air handling unit's respective smoke dampers.

Smoke detectors will be provided for the following air handling units:

AHU-2.1 Supply air and reutrn air ductwork.

AHU-2.2 Supply air ductwork.

Fire Dampers:

Dampers shall be furnished by Control Contractor and shall be installed by Mechanical Contractor. Provide necessary relays to tie into contacts provided in Fire Alarm Control Panel that will close all fire dampers and shut down all air handling units when fire alarm system is in alarm by heat/smoke detectors or sprinkler flow switches (not by pull stations). Fire dampers shall automatically reset on Fire Alarm Control Panel reset. Air handling units shall have manual restart on Fire Alarm Control Panel reset.

3.1.6 Hydronic Unit Heater Control

A space thermostat shall modulate control valve (FO) in supply piping to each unit to maintain space set point temperature. Line voltage aquastat shall start unit fan on rise in hot water return piping temperature above a preset temperature of 100 F (FA) and stop the fan on drop below set temperature.

3.1.7 [Enter Appropriate Subpart Title Here]3.1.7 Fan Coil Unit Control:

1. Unit blower and two-position automatic control valves (ACV) controlled by wall mounted electronic thermostat and BAS.
2. Thermostat shall have On-Off fan speed control and Off-Auto-Heat-Cool temperature control.
3. In "Auto" temperature mode, thermostat shall determine heating or cooling requirement and activate heating or cooling ACV's to satisfy thermostat.
4. In "Heat" temperature mode, heating ACV shall open to satisfy thermostat setpoint. When room temperature setpoint is satisfied, heating ACV shall be closed.
5. In "Cool" temperature mode, cooling ACV shall open to satisfy thermostat setpoint. When room temperature setpoint is satisfied, cooling ACV shall be closed.
6. In "Off" temperature mode, there is no temperature control and fan is off.
7. When blower control is "Off", all ACV's shall be closed with no

temperature control.

8. Unit blower shall cycle on when any unit ACV opens and shall be off when the unit ACV's are closed.

3.1.8 Electric Cabinet Unit Heater Control

Electric heaters shall be controlled by manufacturers standard integral thermostats furnished with units.

3.1.9 Exhaust Fan EF-2.2 Control

Exhaust fan, single speed, shall be interlocked with AHU-2.1.

Exhaust fan controlled by "HAND-OFF-AUTO" selector switch.

When switch in "HAND" position, fan runs continuously.

When switch in "OFF" position, fan shall be off.

When switch in "AUTO" position, exhaust fan shall be interlocked with respective AHU supply fan. WHen AHU supply fan is running, exhaust fan shall run continuously. When AHU supply fan is off, exhaust fan shall be off.

3.1.10 Exhaust Fan EF-2.1, 2.4 and 2.5

Exhaust fan, single speed, interlocked with room thermostat.

Exhaust fan controlled by "HAND-OFF-AUTO" selector switch.

When switch in "HAND" position, fan shall run continuously.

When switch in "OFF" position, fan shall be off.

When switch in "AUTO" position, fan shall be controlled by room thermostat.

Space thermostat shall modulate motor operated outdoor air damper open and shall start exhaust fan to maintain space set point temperature. Prove damper open position with end switch prior to start of exhaust fan.

When space thermostat is satisfied fan shall stop and outdoor air damper shall fully close.

When outside air temperature is below 55 degrees F (FA) supply/exhaust fan shall be lock-out.

3.1.11 Exhaust Fan EF-2.6 Control

Exhaust fan shall be controlled by a wall-mounted switch located near the door to the room.

END OF SECTION -- End of Section --

SECTION TABLE OF CONTENTS

DIVISION 15 - MECHANICAL

SECTION 15951

DIRECT DIGITAL CONTROL FOR HVAC

06/98

PART 1 GENERAL

1.1 REFERENCES
1.2 GENERAL REQUIREMENTS
1.2.1 Nameplates, Lens Caps, and Tags
1.2.2 Verification of Dimensions
1.2.3 Drawings
1.2.4 Power-Line Surge Protection
1.2.5 Surge Protection for Transmitter and Control Wiring
1.2.6 System Overall Reliability Requirement
1.2.7 DDC System Network Accessibility
1.2.8 System Accuracy and Display
1.2.8.1 Space Temperature
1.2.8.2 Duct Temperature
1.2.8.3 Outside Air Temperature
1.2.8.4 Water Temperature
1.2.8.5 High Temperature
1.2.8.6 Relative Humidity
1.2.8.7 Pressure
1.2.8.8 Flow
1.2.8.9 KWh and kW Demand
1.2.8.10 Analog Value Input
1.3 SUBMITTALS
1.4 DELIVERY AND STORAGE
1.5 OPERATION MANUAL
1.6 MAINTENANCE AND REPAIR MANUAL
1.7 MAINTENANCE AND SERVICE
1.7.1 Description of Work
1.7.2 Personnel
1.7.3 Scheduled Inspections
1.7.4 Scheduled Work
1.7.5 Emergency Service
1.7.6 Operation
1.7.7 Records and Logs
1.7.8 Work Requests
1.7.9 System Modifications
1.7.10 Software
1.8 FACTORY TESTING
1.8.1 Factory Test Setup

PART 2 PRODUCTS

2.1 GENERAL EQUIPMENT REQUIREMENTS
2.1.1 Electrical and Electronic Devices
2.1.2 Standard Signals
2.1.3 Ambient Temperature Limits

2.1.4 Year 2000 Compliance
2.1.5 Software
2.2 Not Used
2.2.1
2.2.2
2.2.3
2.3 WIRING
2.3.1 Terminal Blocks
2.3.2 Control Wiring for 24-Volt Circuits
2.3.3 Wiring for 120-Volt Circuits
2.3.4 Instrumentation Cable
2.3.5 Transformers
2.4 ACTUATORS
2.4.1 Valve Actuators
2.5 AUTOMATIC CONTROL VALVES
2.5.1 Butterfly Valve Assembly
2.5.2 Two-Way Valves
2.5.3 Three-Way Valves
2.5.4 Duct-Coil and Terminal-Unit-Coil Valves
2.5.5 Not Used
2.5.6 Valves for Hot-Water and Dual Temperature Service
2.6 DAMPERS
2.6.1 Damper Assembly
2.6.2 Operating Links
2.6.3 Damper Types
2.6.3.1 Outside Air, Return Air, and Relief Air Dampers
2.6.3.2 Mechanical and Electrical Space Ventilation Dampers
2.6.3.3 Smoke Dampers
2.7 SMOKE DETECTORS
2.8 INSTRUMENTATION
2.8.1 Measurements
2.8.2 Temperature Instruments
2.8.2.1 Resistance Temperature Detectors (RTD)
2.8.2.2 Continuous Averaging RTD
2.8.2.3 RTD Transmitter
2.8.3 Relative Humidity Instruments
2.8.4 Electronic Airflow Measurement Stations and Transmitters
2.8.4.1 Stations
2.8.4.2 Transmitters
2.8.5 Pitot Tube Airflow Measurement Stations and Transmitters
2.8.5.1 Stations
2.8.5.2 Transmitters
2.8.6 Differential Pressure Instruments
2.8.7 Thermowells
2.8.8 Sunshields
2.9 THERMOSTATS
2.9.1 Nonmodulating Room Thermostats
2.9.2 Microprocessor Based Room Thermostats
2.9.3 Modulating Room Thermostats
2.9.4 Nonmodulating Capillary Thermostats and Aquastats
2.9.5 Freezestats
2.9.6 Modulating Capillary Thermostats
2.9.7 Fan-Coil Unit Room Thermostats
2.9.7.1 Combination Thermostat
2.10 PRESSURE SWITCHES AND SOLENOID VALVES
2.10.1 Pressure Switches
2.10.2 Differential-Pressure Switches
2.10.3 Pneumatic Electric (PE) Switches
2.10.4 Solenoid-Operated Pneumatic (EP) Valves

2.11 INDICATING DEVICES
2.11.1 Thermometers
2.11.1.1 Piping System Thermometers
2.11.1.2 Piping System Thermometer Stems
2.11.1.3 Nonaveraging Air-Duct Thermometers
2.11.1.4 Not Used
2.11.1.5 Accuracy
2.11.2 Pressure Gauges
2.11.2.1 Not Used
2.11.2.2 Not Used
2.11.2.3 Hydronic System Gauges
2.11.3 Low Differential Pressure Gauges
2.12 CONTROL DEVICES AND ACCESSORIES
2.12.1 Relays
2.12.2 Current to Pneumatic (IP) Transducers
2.12.3 Joule or Watthour Meters
2.12.4 Joule or Watthour Meters with Demand Register
2.12.5 Joule or Watthour Transducers
2.12.6 Current Sensing Relays
2.13 Not Used
2.14 DIRECT DIGITAL CONTROL (DDC) HARDWARE
2.14.1 Network Control Panel
2.14.1.1 Integral Features
2.14.1.2 Communication Interfaces
2.14.1.3 Memory and Real Time Clock (RTC) Backup
2.14.1.4 Duplex Outlet
2.14.1.5 Locking Enclosures
2.14.1.6 Failure Mode
2.14.2 RIU
2.14.2.1 Integral Features
2.14.2.2 Duplex Outlet
2.14.2.3 Locking Enclosures
2.14.2.4 Failure Mode
2.14.3 Universal Programmable Controller (UPC)
2.14.3.1 Integral Features
2.14.3.2 Communication Interfaces
2.14.3.3 Memory and RTC Backup
2.14.3.4 Specific Requirements
2.14.3.5 Locking Enclosures
2.14.3.6 Failure Mode
2.14.4 Unitary Controller
2.14.4.1 Integral Features
2.14.4.2 Communication Interfaces
2.14.4.3 Specific Requirements
2.14.4.4 Failure Mode
2.14.5 Air Cooled CondenserPanel
2.14.6 Not Used
2.14.7 I/O Functions
2.14.7.1 DDC Hardware I/O Functions
2.14.7.2 Failure Mode
2.14.8 Portable Workstation/Tester
2.14.9 Central Workstation/Tester
2.14.10 Data Terminal Cabinet (DTC)
2.15 DDC SOFTWARE
2.15.1 Operating System
2.15.1.1 Startup
2.15.1.2 Operating Mode
2.15.1.3 Failure Mode
2.15.2 Functions

2.15.2.1 Analog Monitoring
2.15.2.2 Logic (Virtual) Points
2.15.2.3 State Variables
2.15.2.4 Analog Totalization
2.15.2.5 Energy Totalization
2.15.2.6 Trending
2.15.3 I/O Point Database/Parameter Definition
2.15.4 Alarm Processing
2.15.4.1 Digital Alarms Definition
2.15.4.2 Analog Alarms Definition
2.15.4.3 Pulse Accumulator Alarms Definition
2.15.5 Constraints
2.15.5.1 Equipment Constraints Definitions
2.15.5.2 Constraints Checks
2.15.6 Diagnostics
2.15.7 Summer-Winter Operation Monitoring
2.15.8 Control Sequences and Control Loops
2.15.9 Command Priorities
2.15.10 Resident Application Software
2.15.10.1 Program Inputs and Outputs
2.15.10.2 DDC General Conditions
2.15.10.3 Scheduled Start/Stop Program
2.15.10.4 Optimum Start/Stop Program
2.15.10.5 Day-Night Setback Program
2.15.10.6 Not Used
2.15.10.7
2.15.10.8 Not Used
2.15.10.9 Not Used
2.15.10.10 Not Used
2.15.10.11 Not used
2.15.10.12 Air Distribution Unitary Controller Software
2.15.10.13 Not Used
2.15.10.14 Not Used
2.15.10.15 Not Used
2.15.10.16 Not Used
2.15.10.17 Not Used
2.15.10.18 Not Used.
2.15.10.19 Not Used
2.15.10.20 Not Used
2.15.10.21 Not Used.
2.15.10.22 Not Used
2.15.10.23 Not Used

PART 3 EXECUTION

3.1 GENERAL INSTALLATION CRITERIA
3.1.1 HVAC Control System
3.1.2 Software Installation
3.1.3 Device Mounting Criteria
3.1.4 Wiring Criteria
3.2 CONTROL SYSTEM INSTALLATION
3.2.1 Damper Actuators
3.2.2 Local Gauges for Actuators
3.2.3 Room Instrument Mounting
3.2.4 Freezestats
3.2.5 Averaging Temperature Sensing Elements
3.2.6 Foundations and Housekeeping Pads
3.2.7 Not Used
3.2.8 Duct Static Pressure Sensing Elements and Transmitters

3.2.9 Indication Devices Installed in Piping and Liquid Systems
3.2.10 Not Used.
3.2.10.1
3.2.10.2
3.2.10.3
3.2.10.4
3.2.10.5
3.2.10.6
3.2.10.7
3.3 CONTROL SEQUENCES OF OPERATION
3.3.1 General Requirements - HVAC Systems
3.3.1.1 Supply Fan Operating
3.3.1.2 Supply Fan Not Operating
3.3.1.3 Hydronic Heating - Distribution Pump Operating
3.3.1.4 Hydronic Heating - Distribution Pump Not Operating
3.3.2 Not Used
3.3.3 Unit Heater and Cabinet Unit Heater
3.3.4 Not Used
3.3.5 All-Air Small Package Unitary System
3.3.6 Dual Temperature Fan-Coil Unit
3.3.7 Not Used
3.3.8 Not Used.
3.3.8.1
3.3.8.2 Not Used
3.3.8.3 Not Used
3.3.9 Not Used
3.3.10 Not Used
3.3.11 Not Used
3.3.12 Not Used
3.3.13 Not Used
3.3.14 Not Used
3.3.15 Not Used
3.3.16 Not Used
3.3.17 Not Used
3.3.18 Variable Air Volume Control Sequence with Return Fan
3.3.18.1 Occupied, Unoccupied, and Ventilation Delay Modes of Operation
3.3.18.2 Fan Control
3.3.18.3 Supply Duct Pressurization Control
3.3.18.4 Return Fan Volume Control
3.3.18.5 Filters
3.3.18.6 Freeze Protection
3.3.18.7 Cooling Coil Control
3.3.18.8 Minimum Outside Air Flow Control
3.3.18.9 Economizer and Mixed Air Temperature Control
3.3.18.10 Not Used.
3.3.18.11 Not Used
3.3.18.12 Emergency Fan Shutdown
3.3.19 Not Used
3.3.20 Not Used
3.3.21 Not Used
3.3.22 Not Used
3.4 COMMISSIONING PROCEDURES
3.4.1 Evaluations
3.4.1.1 Item Check
3.4.1.2 Weather Dependent Test Procedures
3.4.1.3 Two-Point Accuracy Check
3.4.1.4 Insertion and Immersion Temperatures
3.4.1.5 Averaging Temperature

3.4.2 Not Used
3.4.3 Unit Heater and Cabinet Unit Heater
3.4.4 Not Used
3.4.5 All-Air Small Packaged Unitary
3.4.6 Fan Coil Unit
3.4.7 Not Used
3.4.8 Not Used.
3.4.9 Not Used
3.4.10 Not Used
3.4.11 Not Used
3.4.12 Not Used
3.4.13 Not Used
3.4.14 Not Used
3.4.15 Not Used
3.4.16 Not Used
3.4.17 Not Used
3.4.18 Variable Air Volume Control System - With Return Fan
3.4.19 Not Used
3.4.20 Single Zone with Dual Temperature Coil; No Return Fan
3.4.21 Not Used
3.4.22 Not Used
3.5 BALANCING, COMMISSIONING, AND TESTING
3.5.1 Coordination with HVAC System Balancing
3.5.2 Control System Calibration, Adjustments, and Commissioning
3.5.3 Performance Verification Test
3.5.4 Endurance Test
3.5.5 Posted and Panel Instructions
3.6 TRAINING
3.6.1 Training Course Requirements
3.6.2 Training Course Content

-- End of Section Table of Contents --

SECTION 15951

DIRECT DIGITAL CONTROL FOR HVAC
06/98

PART 1 GENERAL

1.1 REFERENCES

The publications listed below form a part of this specification to the extent referenced. The publications are referred to in the text by basic designation only.

AIR MOVEMENT AND CONTROL ASSOCIATION (AMCA)

AMCA 500	(1994) Test Methods for Louvers, Dampers and Shutters

AMERICAN NATIONAL STANDARDS INSTITUTE (ANSI)

ANSI C12.1	(1995) Code for Electricity Metering

AMERICAN SOCIETY OF MECHANICAL ENGINEERS (ASME)

ASME B40.1	(1991) Gauges - Pressure Indicating Dial Type - Elastic Element

ELECTRONIC INDUSTRIES ASSOCIATION (EIA)

EIA ANSI/EIA/TIA 232-E	(1991) Interface Between Data Technical Equipment and Data Circuit-Terminating Equipment Employing Serial Binary Data Interchange

INSTITUTE OF ELECTRICAL AND ELECTRONICS ENGINEERS (IEEE)

IEEE C62.41	(1991; R 1995) Surge Voltages in Low-Voltage AC Power Circuits
IEEE Std 142	(1991) IEEE Recommended Practice for Grounding of Industrial and Commercial Power Systems

NATIONAL ELECTRICAL MANUFACTURERS ASSOCIATION (NEMA)

NEMA 250	(1991) Enclosures for Electrical Equipment (1000 Volts Maximum)
NEMA ICS 1	(1993) Industrial Control and Systems
NEMA ST 1	(1988) Specialty Transformers (Exept General-Purpose Type)

NATIONAL FIRE PROTECTION ASSOCIATION (NFPA)

NFPA 70	(1996; Errata 96-4) National Electrical

	Code
NFPA 90A	(1996) Installation of Air Conditioning and Ventilating Systems

UNDERWRITERS LABORATORIES (UL)

UL 268A	(1993; Rev thru May 1997) Smoke Detectors for Duct Application
UL 508	(1993; Rev thru Oct 1997) Industrial Control Equipment
UL 555S	(1996) Leakage Rated Dampers for Use in Smoke Control Systems

1.2 GENERAL REQUIREMENTS

The direct digital control (DDC) shall be a complete system suitable for the heating, ventilating and air-conditioning (HVAC) system.

1.2.1 Nameplates, Lens Caps, and Tags

Nameplates and lens caps bearing legends as shown and tags bearing device-unique identifiers as shown shall have engraved or stamped characters. A plastic or metal tag shall be mechanically attached directly to each device or attached by a metal chain or wire. Each airflow measurement station shall have a tag showing flow rate range for signal output range, duct size, and identifier as shown.

1.2.2 Verification of Dimensions

After becoming familiar with all details of the work, the Contractor shall verify all dimensions in the field, and shall advise the Contracting Officer of any discrepancy before performing any work.

1.2.3 Drawings

Because of the small scale of the drawings, it is not possible to indicate all offsets, fittings, and accessories that may be required. The Contractor shall carefully investigate the mechanical, electrical, and finish conditions that could affect the work to be performed, shall arrange such work accordingly, and shall furnish all work necessary to meet such conditions.

1.2.4 Power-Line Surge Protection

Equipment connected to ac circuits shall be protected from power-line surges. Equipment protection shall meet the requirements of IEEE C62.41. Fuses shall not be used for surge protection.

1.2.5 Surge Protection for Transmitter and Control Wiring

DDC system control-panel equipment shall be protected against surges induced on control and transmitter wiring installed outside and as shown. The equipment protection shall be tested in the normal mode and in the common mode, using the following two waveforms:

a. A 10-microsecond by 1,000-microsecond waveform with a peak voltage

of 1,500 volts and a peak current of 60 amperes.

b. An eight microsecond by 20-microsecond waveform with a peak voltage of 1,000 volts and a peak current of 500 amperes.

1.2.6 System Overall Reliability Requirement

The system shall be configured and installed to yield a mean time between failure (MTBF) of at least 40,000 hours. Each DDC controller shall be designed, configured, installed and programmed to provide for stand alone operation with minimal performance degradation on failure of other system components to which it is connected or with which it communicates.

1.2.7 DDC System Network Accessibility

Where the systems to be controlled by the DDC system are located in multiple mechanical rooms, each mechanical room shall have at least one communication port for the portable workstation/tester. DDC controllers shall be located in the same room as the equipment being controlled or in an adjacent space which has direct access to the equipment room.

1.2.8 System Accuracy and Display

The system shall maintain an end-to-end accuracy for one year from sensor to operator's console display for the applications specified and shall display the value as specified. Each temperature shall be displayed and printed to nearest 0.1 degree F.

1.2.8.1 Space Temperature

Space temperature with a range of 50 to 85 degrees F plus or minus 0.75 degree F for conditioned space; 30 to 130 degrees F plus or minus 1 degree F for unconditioned space.

1.2.8.2 Duct Temperature

Duct temperature with a range of 40 to 140 degrees F plus or minus 2 degrees F.

1.2.8.3 Outside Air Temperature

Outside air (OA) temperature with a range of minus 30 to plus 130 degrees F plus or minus 2 degrees F; with a subrange of 30 to 100 degrees F plus or minus 1 degree F.

1.2.8.4 Water Temperature

Water temperature with a range of 30 to 100 degrees F plus or minus 0.75 degree F; the range of 100 to 250 degrees F plus or minus 2 degrees F; and water temperatures for the purpose of performing Btu calculations using differential temperatures to plus or minus 0.5 degree F using matched sensors.

1.2.8.5 High Temperature

High temperature with a range of 200 to 500 degrees F plus or minus 2.0 degrees F.

1.2.8.6 Relative Humidity

Relative humidity, within a range of 20 to 80 percent, plus or minus 6.0 percent of range (display and print to nearest 1.0 percent).

1.2.8.7 Pressure

Pressure with a range for the specific application plus or minus 2.0 percent of range (display and print to nearest psi.)

1.2.8.8 Flow

Flow with a range for the specific application plus or minus 3.0 percent of range, and flows for the purpose of thermal calculations to plus or minus 2.0 percent of actual flow (display and print to nearest unit, such as gallons per minute).

1.2.8.9 KWh and kW Demand

KWh and kW demand with a range for the specific application plus or minus 1.0 percent of reading (display and print to nearest kWh or kW).

1.2.8.10 Analog Value Input

An analog value input to the system's equipment via an AI with a maximum error of 0.50 percent of range, not including the sensor or transmitter error. This accuracy shall be maintained over the specified environmental conditions.

1.3 SUBMITTALS

Government approval is required for submittals with a "GA" designation; submittals having an "FIO" designation are for information only. The following shall be submitted in accordance with Section 01330 SUBMITTAL PROCEDURES:

SD-01 Data

Equipment Compliance Booklet; GA1.

The HVAC Control System Equipment Compliance Booklet (ECB) shall be in booklet form and indexed, with numbered tabs separating the information on each device. It shall consist of, but not be limited to, data sheets and catalog cuts which document compliance of all devices and components with the specifications. The ECB shall be indexed in alphabetical order by the unique identifiers. Devices and components which do not have unique identifiers shall follow the devices and components with unique identifiers and shall be indexed in alphabetical order according to their functional name. The ECB shall include a Bill of Materials for each HVAC Control System. The Bill of Materials shall function as the Table of Contents for the ECB and shall include the device's unique identifier, device function, manufacturer, model/part/catalog number used for ordering, and tab number where the device information is located in the ECB. The ECB shall be submitted along with Submittal SD-04, Drawings.

SD-04 Drawings

HVAC Control System; GA1.

Drawings shall be on 34 by 22 inch sheets in the form and arrangement

shown. The drawings shall use the same abbreviations, symbols, nomenclature and identifiers shown. Each control system element on a drawing shall have a unique identifier as shown. The HVAC Control System Drawings shall be delivered together as a complete submittal. Deviations must be approved by the Contracting Officer. Drawings shall be submitted along with Submittal SD-01, Data.

a. HVAC Control System Drawings shall include the following:

Sheet One: Drawing Index, HVAC Control System Legend.
Sheet Two: Valve Schedule, Damper Schedule.

Sheet Three: Control System Schematic and Equipment Schedule.
Sheet Four: Sequence of Operation and Data Terminal Strip Layout.
Sheet Five: Control Loop Wiring Diagrams.
Sheet Six: Motor Starter and Relay Wiring Diagram.
Sheet Seven: Communication Network and Block Diagram.
Sheet Eight: DDC Panel Installation and Block Diagram.

(Repeat Sheets Three through Eight for each AHU System.)

b. The HVAC Control System Drawing Index shall show the name and number of the building, military site, State or other similar designation, and Country. The Drawing Index shall list HVAC Control System Drawings, including the drawing number, sheet number, drawing title, and computer filename when used. The HVAC Control System Legend shall show generic symbols and the name of devices shown on the HVAC Control System Drawings.

c. The valve schedule shall include each valve's unique identifier, size, flow coefficient Cv, pressure drop at specified flow rate, spring range, positive positioner range, actuator size, close-off pressure data, dimensions, and access and clearance requirements data. Valve schedules may be submitted in advance but shall be included in the complete submittal.

d. The damper schedule shall contain each damper's and each actuator's identifier, nominal and actual sizes, orientation of axis and frame, direction of blade rotation, spring ranges, operation rate, positive positioner ranges, locations of actuators and damper end switches, arrangement of sections in multi-section dampers, and methods of connecting dampers, actuators, and linkages. The Damper Schedule shall include the maximum leakage rate at the operating static-pressure differential. The Damper Schedule shall contain actuator selection data supported by calculations of the torque required to move and seal the dampers, access and clearance requirements. Damper schedules may be submitted in advance but shall be included in the complete submittal.

e. The compressed air station schematic diagram shall show all equipment, including: compressor with motor horsepower and voltage; starter; isolators; manual bypasses; tubing sizes; drain piping and drain traps; reducing valves; dryer; and data on manufacturer's names and model numbers, mounting, access, and clearance requirements. Air Compressor and air dryer data shall include calculations of the air consumption of all current-to-pneumatic transducers and of any other control system devices to be connected to the compressed air station, and the compressed air supply dewpoint temperature at 20 psig. Compressed air station schematic drawings shall be submitted for each compressed air station.

f. The HVAC control system schematics shall be in the form shown, and shall show all control and mechanical devices associated with the HVAC

system. A system schematic drawing shall be submitted for each HVAC system.

g. The HVAC control system equipment Schedule shall be in the form shown. All devices shown on the drawings having unique identifiers shall be referenced in the equipment schedule. Information to be included in the equipment schedule shall be the control loop, device unique identifier, device function, setpoint, input range, and additional important parameters (i.e., output range). An equipment schedule shall be submitted for each HVAC system.

h. The HVAC control system sequence of operation shall reflect the language and format of this specification, and shall refer to the devices by their unique identifiers as shown. No operational deviations from specified sequences will be permitted without prior written approval of the Contracting Officer. Sequences of operation shall be submitted for each HVAC control system including each type of terminal unit control system.

i. The HVAC control system wiring diagrams shall be functional wiring diagrams which show the interconnection of conductors and cables to HVAC control panel terminal blocks and to the identified terminals of devices, starters and package equipment. The wiring diagrams shall show necessary jumpers and ground connections. The wiring diagrams shall show the labels of all conductors. Sources of power required for HVAC control systems and for packaged equipment control systems shall be identified back to the panel board circuit breaker number, HVAC system control panel, magnetic starter, or packaged equipment control circuit. Each power supply and transformer not integral to a controller, starter, or packaged equipment shall be shown. The connected volt-ampere load and the power supply volt-ampere rating shall be shown. Wiring diagrams shall be submitted for each HVAC control system.

SD-08 Statements

Commissioning Procedures; FIO.

Six copies of the HVAC control system commissioning procedures, in booklet form and indexed, 60 days prior to the scheduled start of commissioning. Commissioning procedures shall be provided for each HVAC control system, and for each type of terminal unit control system. The Commissioning procedures shall reflect the format and language of this specification, and refer to devices by their unique identifiers as shown. The Commissioning procedures shall be specific for each HVAC system, and shall give detailed step-by-step procedures for commissioning of the system.

a. The Commissioning procedures shall include detailed, product specific set-up procedures, configuration procedures, adjustment procedures, and calibration procedures for each device. Where the detailed product specific commissioning procedures are included in manufacturer supplied manuals, reference may be made in the HVAC control system commissioning procedures to the manuals.

b. An HVAC control system commissioning procedures equipment list shall be included that lists the equipment to be used to accomplish commissioning. The list shall include manufacturer name, model number, equipment function, the date of the latest calibration, and the results of the latest calibration.

Performance Verification Test Procedures; FIO.

Six copies of the HVAC Control System Performance Verification Test Procedures, in booklet form and indexed, 60 days before the Contractor's scheduled test dates. The performance verification test procedures shall refer to the devices by their unique identifiers as shown, shall explain, step-by-step, the actions and expected results that will demonstrate that the HVAC control system performs in accordance with the sequences of operation, and other contract documents. An HVAC control system performance verification test equipment list shall be included that lists the equipment to be used during performance verification testing. The list shall include manufacturer name, model number, equipment function, the date of the latest calibration, and the results of the latest calibration.

Training Course Materials; GA1.

An outline for the HVAC control system training course with a proposed time schedule. Approval of the planned training schedule shall be obtained from the Government at least 60 days prior to the start of the training. Six copies of HVAC control system training course material 30 days prior to the scheduled start of the training course. The training course material shall include the operation manual, maintenance and repair manual, and paper copies of overheads used in the course.

SD-09 Reports

Commissioning Report; FIO.

Six copies of the HVAC Control System Commissioning Report, in booklet form and indexed, within 30 days after completion of the system commissioning. The commissioning report shall include data collected during the HVAC control system commissioning procedures and shall follow the format of the commissioning procedures. The commissioning report shall include all configuration checksheets with final values listed for all parameters, setpoints, P, I, D setting constants, calibration data for all devices, results of adjustments, and results of testing.

Performance Verification Test Report; FIO.

Six copies of the HVAC Control System Performance Verification Test Report, in booklet form and indexed, within 30 days after completion of the test. The HVAC control system performance verification test report shall include data collected during the HVAC control system performance verification test. The original copies of all data gathered during the performance verification test shall be turned over to the Government after Government approval of the test results.

SD-18 Records

Service Organizations; FIO.

Six copies of a list of service organizations qualified to service the HVAC control system. The list shall include the service organization name, address, technical point of contact and telephone number, and contractual point of contact and telephone number.

SD-19 Operation and Maintenance Manuals

Operation Manual; GA1. Maintenance and Repair Manual; GA1.

Six copies of the HVAC Control System Operation Manualand HVAC Control System Maintenance and Repair Manual, for each HVAC control system, 30 days before the date scheduled for the training course.

1.4 DELIVERY AND STORAGE

Products shall be stored with protection from the weather, humidity and temperature variations, dirt and dust, and other contaminants, within the storage condition limits published by the equipment manufacturer. Dampers shall be stored so that seal integrity, blade alignment and frame alignment are maintained.

1.5 OPERATION MANUAL

An HVAC control system operation manual in indexed booklet form shall be provided for each HVAC control system. The operation manual shall include the HVAC control system sequence of operation, and procedures for the HVAC system start-up, operation and shut-down. The operation manual shall include as-built HVAC control system detail drawings. The operation manual shall include the as-built configuration checksheets, the procedures for changing HVAC control system setpoints, and the procedures for placing HVAC system controllers in the manual control mode.

a. The procedures for changing HVAC control system setpoints shall describe the step-by-step procedures required to change the process variable setpoints, the alarm setpoints, the bias settings, and setpoint reset schedules.

b. The procedures for placing HVAC system controllers in the manual control mode shall describe step-by-step procedures required to obtain manual control of each controlled device and to manually adjust their positions.

1.6 MAINTENANCE AND REPAIR MANUAL

An HVAC control system maintenance and repair manual in indexed booklet form in hardback binders shall be provided for each HVAC control system. The maintenance and repair manual shall include the routine maintenance checklist, a recommended repair methods list, a list of recommended maintenance and repair tools, the qualified service organization list, the as-built commissioning procedures and report, the as-built performance verification test procedures and report, and the as-built equipment data booklet.

a. The routine maintenance checklist shall be arranged in a columnar format. The first column shall list all devices listed in the equipment compliance booklet, the second column shall state the maintenance activity or state no maintenance required, the third column shall state the frequency of the maintenance activity, and the fourth column for additional comments or reference.

b. The recommended repair methods list shall be arranged in a columnar format and shall list all devices in the equipment data compliance booklet and state the guidance on recommended repair methods, either field repair, factory repair, or whole-item replacement.

c. The as-built equipment data booklet shall include the equipment

compliance booklet and manufacturer supplied user manuals and information.

d. If the operation manual and the maintenance and repair manual are provided in a common volume, they shall be clearly differentiated and separately indexed.

1.7 MAINTENANCE AND SERVICE

Services, materials and equipment shall be provided as necessary to maintain the entire system in an operational state as specified for a period of one year after successful completion and acceptance of the Performance Verification Test. Impacts on facility operations shall be minimized.

1.7.1 Description of Work

The adjustment and repair of the system shall include the manufacturer's required adjustments of computer equipment, software updates, transmission equipment and instrumentation and control devices.

1.7.2 Personnel

Service personnel shall be qualified to accomplish work promptly and satisfactorily. The Government shall be advised in writing of the name of the designated service representative, and of any changes in personnel.

1.7.3 Scheduled Inspections

Two inspections shall be performed at six-month intervals (or less if required by the manufacturer), and all work required shall be performed. Inspections shall be scheduled in June and December. These inspections shall include:

a. Visual checks and operational tests of equipment.

b. Fan checks and filter changes for control system equipment.

c. Clean control system equipment including interior and exterior surfaces.

d. Check and calibrate each field device. Check and calibrate 50 percent of the total analog points during the first inspection. Check and calibrate the remaining 50 percent of the analog points during the second major inspection. Certify analog test instrumentation accuracy to be twice that of the device being calibrated. Randomly check at least 25 percent of all digital points for proper operation during the first inspection. Randomly check at least 25 percent of the remaining digital points during the second inspection.

e. Run system software diagnostics and correct diagnosed problems.

f. Resolve any previous outstanding problems.

1.7.4 Scheduled Work

This work shall be performed during regular working hours, Monday through Friday, excluding legal holidays.

1.7.5 Emergency Service

The Government will initiate service calls when the system is not functioning properly. Qualified personnel shall be available to provide service to the system. A telephone number where the service supervisor can be reached at all times shall be provided. Service personnel shall be at the site within 24 hours after receiving a request for service. The control system shall be restored to proper operating condition within three calendar days after receiving a request for service.

1.7.6 Operation

Scheduled adjustments and repairs shall include verification of the control system operation as demonstrated by the applicable tests of the performance verification test.

1.7.7 Records and Logs

Dated records and logs shall be kept of each task, with cumulative records for each major component, and for the complete system chronologically. A continuous log shall be maintained for all devices. The log shall contain initial analog span and zero calibration values and digital points. Complete logs shall be kept and shall be available for inspection onsite, demonstrating that planned and systematic adjustments and repairs have been accomplished for the control system.

1.7.8 Work Requests

Each service call request shall be recorded as received and shall include the serial number identifying the component involved, its location, date and time the call was received, nature of trouble, names of the service personnel assigned to the task, instructions describing what has to be done, the amount and nature of the materials to be used, the time and date work started, and the time and date of completion. A record of the work performed shall be submitted within 5 days after work is accomplished.

1.7.9 System Modifications

Recommendations for system modification shall be submitted in writing. No system modifications, including operating parameters and control settings, shall be made without prior approval of the Government. Any modifications made to the system shall be incorporated into the operations and maintenance manuals, and other documentation affected.

1.7.10 Software

Updates to the software shall be provided for system, operating and application software, and operation in the system shall be verified. Updates shall be incorporated into operations and maintenance manuals, and software documentation. There shall be at least one scheduled update near the end of the first year's warranty period, at which time the latest released version of the Contractor's software shall be installed and validated.

1.8 FACTORY TESTING

The Contractor shall assemble the factory test DDC system as specified and shall perform test to demonstrate that the performance of the system satisfies the requirements of this specification. Model numbers of equipment tested shall be identical to those to be delivered to the site.

Original copies of data produced, including results of each test procedure during factory testing shall be delivered to the Government at the conclusion of testing, prior to Government approval of the test. The test results documentation shall be arranged so that commands, responses, and data acquired are correlated in a manner which will allow for logical interpretation of the data.

1.8.1 Factory Test Setup

The factory test setup shall include the following:

a. Central workstation/tester.

b. Printer.

c. DDC test set.

d. Portable workstation/tester.

e. Communication links of each type and speed including MODEMs.

f. Dial-up MODEM.

g. Software.

PART 2 PRODUCTS

2.1 GENERAL EQUIPMENT REQUIREMENTS

Units of the same type of equipment shall be products of a single manufacturer. Not withstanding Section 00700 CONTRACT CLAUSES FAR 52.236-5, Material and Workmanship, the HVAC controls system shall be manufactured by Johnson Controls in order to be fully compatible with and interface with the existing HVAC controls system in Phase 1 and 2 Lodging Facility. No other product will be acceptable. The Competition Advocate authorities sole source procurement. Each major component of equipment shall have the manufacturer's name and address, and the model and serial number in a conspicuous place. Materials and equipment shall be standard products of a manufacturer regularly engaged in the manufacturing of such products, which are of a similar material, design and workmanship. The standard products shall have been in a satisfactory commercial or industrial use for two years prior to use on this project. The two years' use shall include applications of equipment and materials under similar circumstances and of similar size. The two years' experience shall be satisfactorily completed by a product which has been sold or is offered for sale on the commercial market through advertisements, manufacturers' catalogs, or brochures. Products having less than a two-year field service record will be acceptable if a certified record of satisfactory field operation, for not less than 6,000 hours exclusive of the manufacturer's factory tests, can be shown. The equipment items shall be supported by a service organization. Items of the same type and purpose shall be identical, including equipment, assemblies, parts and components. Automatic temperature controls shall be direct digital controls that will provide the required sequence of operation.

2.1.1 Electrical and Electronic Devices

Electrical, electronic, and electropneumatic devices not located within a DDC panel shall have a NEMA ICS 1 enclosure in accordance with NEMA 250

unless otherwise shown.

2.1.2 Standard Signals

Except for air distribution terminal unit control equipment, the output of all analog transmitters and the analog input and output of all DDC controllers shall be 4-to-20 mAdc signals. The signal shall originate from current-sourcing devices and shall be received by current-sinking devices.

2.1.3 Ambient Temperature Limits

DDC panels shall have ambient condition ratings of 35 to 120 degrees F and 10 to 95 percent relative humidity, noncondensing. Devices installed outdoors shall operate within limit ratings of minus 35 to plus 150 degrees F. Instrumentation and control elements shall be rated for continuous operation under the ambient environmental temperature, pressure, humidity, and vibration conditions specified or normally encountered for the installed location.

2.1.4 Year 2000 Compliance

All equipment and software shall be Year 2000 compliant and shall be able to accurately process date/time data (including, but not limited to, calculating, comparing, and sequencing) from, into, and between the twentieth and twenty-first centuries, including leap year calculations, when used in accordance with the product documentation provided by the contractor, provided that all products (e.g. hardware, software, firmware) used in combination with other information technology, shall accurately process date/time data if other information technology properly exchanges date/time data with it.

2.1.5 Software

Software shall be windows base.

2.2 Not Used2.2.1 2.2.2 2.2.3

2.3 WIRING

2.3.1 Terminal Blocks

Terminal blocks shall be insulated, modular, feed-through, clamp style with recessed captive screw-type clamping mechanism, shall be suitable for rail mounting, and shall have end plates and partition plates for separation or shall have enclosed sides.

2.3.2 Control Wiring for 24-Volt Circuits

Control wiring for 24-volt circuits shall be 18 AWG minimum, stranded copper and shall be rated for 300-volt service.

2.3.3 Wiring for 120-Volt Circuits

Wiring for 120-volt circuits shall be 18 AWG minimum, stranded copper and shall be rated for 600-volt service.

2.3.4 Instrumentation Cable

Instrumentation cable shall be 18 AWG, stranded copper, single- or

multiple-twisted, minimum 2 inch lay of twist, 100 percent shielded pairs, and shall have a 300-volt insulation. Each pair shall have a 20 AWG tinned-copper drain wire and individual overall pair insulation. Cables shall have an overall aluminum-polyester or tinned-copper cable-shield tape, overall 20 AWG tinned-copper cable drain wire, and overall cable insulation.

2.3.5 Transformers

Step down transformers shall be utilized where control equipment operates at lower than line circuit voltage. Transformers, other than transformers in bridge circuits, shall have primaries wound for the voltage available and secondaries wound for the correct control circuit voltage. Transformer shall be sized so that the connected load is 80 percent of the rated capacity or less. Transformers shall conform to UL 508 and NEMA ST 1.

2.4 ACTUATORS

Actuators shall be electric or electronic and shall be provided with mounting and connecting hardware. Electric or electronic actuators shall be used for variable air volume (VAV) air terminal units. Actuators shall fail to their spring-return positions on signal or power failure ,except that VAV terminal unit actuators may be of the floating type. The actuator stroke shall be limited in the direction of power stroke by an adjustable stop. Actuators shall have a visible position indicator. Actuators shall smoothly open or close the devices to which they are applied and shall have a full stroke response time of 60 seconds or less. Electric actuators shall have an oil-immersed gear train. Electric or electronic actuators operating in series shall have an auxiliary actuator driver. Electric or electronic actuators used in sequencing applications shall have an adjustable operating range and start point. Pneumatic actuators shall be rated for 25 psig operating pressure except for high-pressure cylinder-type actuators.

2.4.1 Valve Actuators

Valve actuators shall be selected to provide a minimum of 125 percent of the motive power necessary to operate the valve over its full range of operation.

2.5 AUTOMATIC CONTROL VALVES

Valves shall have stainless-steel stems and stuffing boxes with extended necks to clear the piping insulation. Unless otherwise stated, valves shall have globe style bodies. Valve bodies shall be designed for not less than 125 psig working pressure or 150 percent of the system operating pressure, whichever is greater. Valve leakage rating shall be 0.01 percent of rated Cv. Unless otherwise specified, bodies for valves 1-1/2 inches and smaller shall be brass or bronze, with threaded or union ends; bodies for 2 inch valves shall have threaded ends; and bodies for valves 2 to 3 inches shall be of brass, bronze or iron. Bodies for valves 2-1/2 inches and larger shall be provided with flanged-end connections. Valve Cv shall be within 100 to 125 percent of the Cv shown.

2.5.1 Butterfly Valve Assembly

Butterfly valves shall be threaded lug type suitable for dead-end service and modulation to the fully-closed position, with carbon-steel bodies and noncorrosive discs, stainless steel shafts supported by bearings, and EPDM

seats suitable for temperatures from minus 20 to plus 250 degrees F. Valves shall have a manual means of operation independent of the actuator. The rated Cv for butterfly valves shall be the value Cv at 70% open (60 degrees open).

2.5.2 Two-Way Valves

Two-way modulating valves shall have equal-percentage characteristics.

2.5.3 Three-Way Valves

Three-way valves shall provide linear flow control with constant total flow throughout full plug travel.

2.5.4 Duct-Coil and Terminal-Unit-Coil Valves

Control valves with either flare-type or solder-type ends shall be provided for duct or terminal-unit coils. Flare nuts shall be furnished for each flare-type end valve.

2.5.5 Not Used

2.5.6 Valves for Hot-Water and Dual Temperature Service

For hot water service below 250 degrees F and dual-temperature service, internal trim (including seats, seat rings, modulating plugs, and springs) of valves controlling water hotter than 210 degrees F shall be Type 316 stainless steel. Internal trim for valves controlling water 210 degrees F or less shall be brass or bronze. Nonmetallic parts of hot-water control valves shall be suitable for a minimum continuous operating temperature of 250 degrees F or 50 degrees F above the system design temperature, whichever is higher. Valves 4 inches and larger shall be butterfly valves.

2.6 DAMPERS

2.6.1 Damper Assembly

A single damper section shall have blades no longer than 48 inches and shall be no higher than 72 inches. Maximum damper blade width shall be 8 inches. Larger sizes shall be made from a combination of sections. Dampers shall be steel, or other materials where shown. Flat blades shall be made rigid by folding the edges. Blade-operating linkages shall be within the frame so that blade-connecting devices within the same damper section shall not be located directly in the air stream. Damper axles shall be 0.5 inch minimum, plated steel rods supported in the damper frame by stainless steel or bronze bearings. Blades mounted vertically shall be supported by thrust bearings. Pressure drop through dampers shall not exceed 0.04 inch water gauge at 1,000 feet per minute in the wide-open position. Frames shall not be less than 2 inches in width. Dampers shall be tested in accordance with AMCA 500.

2.6.2 Operating Links

Operating links external to dampers, such as crankarms, connecting rods, and line shafting for transmitting motion from damper actuators to dampers, shall withstand a load equal to at least twice the maximum required damper-operating force. Rod lengths shall be adjustable. Links shall be brass, bronze, zinc-coated steel, or stainless steel. Working parts of joints and clevises shall be brass, bronze, or stainless steel.

Adjustments of crankarms shall control the open and closed positions of dampers.

2.6.3 Damper Types

Dampers shall be parallel-blade type.

2.6.3.1 Outside Air, Return Air, and Relief Air Dampers

Outside air, return air and relief air dampers shall be provided where shown. Blades shall have interlocking edges and shall be provided with compressible seals at points of contact. The channel frames of the dampers shall be provided with jamb seals to minimize air leakage. Dampers shall not leak in excess of 20 cfm per square foot at 4 inches water gauge static pressure when closed. Seals shall be suitable for an operating temperature range of minus 40 to plus 200 degrees F. Dampers shall be rated at not less than 2,000 feet per minute air velocity.

2.6.3.2 Mechanical and Electrical Space Ventilation Dampers

Mechanical and electrical space ventilation dampers shall be as shown. Dampers shall not leak in excess of 80 cfm square foot at 4 inches water gauge static pressure when closed. Dampers shall be rated at not less than 1,500 feet per minute air velocity.

2.6.3.3 Smoke Dampers

Smoke-damper and actuator assembly required per NFPA 90A shall meet the Class II leakage requirements of UL 555S. Dampers shall be rated at not less than 2000 fpm air velocity.

2.7 SMOKE DETECTORS

Duct smoke detectors shall be provided in supply and return air ducts in accordance with NFPA 90A. Duct smoke detectors shall conform to the requirements of UL 268A. Duct smoke detectors shall have perforated sampling tubes extended into the air duct. Detector circuitry shall be mounted in a metallic enclosure exterior to the duct. Detectors shall have manual reset. Detectors shall be rated for air velocities that include air flows between 500 and 4000 fpm. Detectors shall be powered from the fire alarm control panel (FACP). Detectors shall have two sets of normally open alarm contacts and two sets of normally closed alarm contacts. Detectors shall be connected to the building fire alarm panel for alarm initiation. A remote annunciation lamp and accessible remote reset switch shall be provided for duct detectors that are mounted eight feet or more above the finished floor and for detectors that are not readily visible. Remote lamps and switches as well as the affected fan units shall be properly identified in etched rigid plastic placards.

2.8 INSTRUMENTATION

2.8.1 Measurements

Transmitters shall be calibrated to provide the following measurements, over the indicated ranges, for an output of 4 to 20 mAdc:

a. Conditioned space temperature, from 50 to 85 degrees F.

b. Duct temperature, from 40 to 140 degrees F.

c. Heating hot-water temperature, from 100 to 250 degrees F.

d. Outside-air temperature, from minus 30 to 130 degrees F.

e. Relative humidity, 0 to 100 percent for space and duct high-limit applications.

f. Differential pressure for VAV supply-duct static pressure from 0 to 2.0 inches water gauge.

g. Pitot-tube air-flow measurement station and transmitter, from 0 to 0.1 inch water gauge for flow velocities of 700 to 1200 fpm, 0 to 0.25 inch water gauge for velocities of 700 to 1800 fpm, or 0 to 0.5 inch water gauge for velocities of 700 to 2500 fpm.

h. Electronic air-flow measurement station and transmitter, from 125 to 2500 fpm.

2.8.2 Temperature Instruments

2.8.2.1 Resistance Temperature Detectors (RTD)

Temperature sensors shall be 100 ohms 3- or 4-wire RTD. Each RTD shall be platinum with a tolerance of plus or minus 0.1 percent at 32 degrees F, and shall be encapsulated in epoxy, series 300 stainless steel, anodized aluminum, or copper. Each RTD shall be furnished with an RTD transmitter as specified, integrally mounted unless otherwise shown.

2.8.2.2 Continuous Averaging RTD

Continuous averaging RTDs shall have a tolerance of plus or minus 1.0 degree F at the reference temperature, and shall be of sufficient length to ensure that the resistance represents an average over the cross section in which it is installed. The sensing element shall have a bendable copper sheath. Each averaging RTD shall be furnished with an RTD transmitter to match the resistance range of the averaging RTD.

2.8.2.3 RTD Transmitter

The RTD transmitter shall match the resistance range of the RTD. The transmitter shall be a two-wire, loop powered device. The transmitter shall produce a linear 4-to-20 mAdc output corresponding to the required temperature measurement. The output error shall not exceed 0.1 percent of the calibrated measurement.

2.8.3 Relative Humidity Instruments

A relative-humidity instrument for indoor application shall have a measurement range from 0 to 100 percent relative-humidity and be rated for operation at ambient air temperatures within the range of 25 to 130 degrees F. It shall be capable of being exposed to a condensing air stream (100 percent RH) with no adverse effect to the sensor's calibration or other harm to the instrument. The instrument shall be of the wall-mounted or duct-mounted type, as required by the application, and shall be provided with any required accessories. Instruments used in duct high-limit

applications shall have a bulk polymer resistive sensing element. Duct-mounted instruments shall be provided with a duct probe designed to protect the sensing element from dust accumulation and mechanical damage. The instrument (sensing element and transmitter) shall be a two-wire, loop-powered device and shall have an accuracy of plus or minus three percent of full scale within the range of 20 to 80 percent relative humidity. The instrument shall have a typical long-term stability of 1 percent or less drift per year. The transmitter shall convert the sensing element's output to a linear 4-20 mAdc output signal in proportion to the measured relative-humidity value. The transmitter shall include offset and span adjustments.

2.8.4 Electronic Airflow Measurement Stations and Transmitters

2.8.4.1 Stations

Each station shall consist of an array of velocity sensing elements and an air-flow straightener. Air-flow straightener shall be contained in a flanged sheet metal or aluminum casing. The velocity sensing elements shall be of the RTD or thermistor type, producing a linear output. The sensing elements shall be distributed across the duct cross section in the quantity and pattern specified by the published installation instructions of the station manufacturer. The resistance to air flow through the airflow measurement station shall not exceed 0.08 inch water gauge at an airflow of 2,000 fpm. Station construction shall be suitable for operation at airflows of up to 5,000 fpm over a temperature range of 40 to 120 degrees F, and accuracy shall be plus or minus three percent over a range of 125 to 2,500 fpm. In outside air measurement or in low-temperature air delivery applications, the station shall be certified by the manufacturer to be accurate as specified over a temperature range of minus 20 to plus 120 degrees F. In outside air measurement applications,the air flow straightener shall be constructed of 1/8 inch aluminum honeycomb and the depth of the straightener shall not be less than 1.5 inches.

2.8.4.2 Transmitters

Each transmitter shall produce a linear, temperature compensated 4-to-20 mAdc, output corresponding to the required velocity pressure measurement. The transmitter shall be a two-wire, loop powered device. The output error of the transmitter shall not exceed 0.5 percent of the calibrated measurement.

2.8.5 Pitot Tube Airflow Measurement Stations and Transmitters

2.8.5.1 Stations

Each station shall contain an array of velocity sensing elements and straightening vanes inside a flanged sheet metal casing. The velocity sensing elements shall be of the multiple pitot tube type with averaging manifolds. The sensing elements shall be distributed across the duct cross section in the quantity and pattern specified by the published installation instructions of the station manufacturer. The resistance to air flow through the airflow measurement station shall not exceed 0.08 inch water gauge at an airflow of 2,000 fpm. Station construction shall be suitable for operation at airflows of up to 5,000 fpm over a temperature range of 40 to 120 degrees F, and accuracy shall be plus or minus three percent over a range of 500 to 2,500 fpm. This device will not be used if the required velocity measurement is below 700 fpm or for outside airflow measurements.

2.8.5.2 Transmitters

Each transmitter shall produce a linear 4-to-20 mAdc output corresponding to the required velocity pressure measurement. Each transmitter shall have a low range differential pressure sensing element. The transmitter shall be a two-wire, loop powered device. Sensing element accuracy shall be plus or minus one percent of full scale, and overall transmitter accuracy shall be plus or minus 0.25 percent of the calibrated measurement.

2.8.6 Differential Pressure Instruments

The instrument shall be a pressure transmitter with an integral sensing element. The instrument over pressure rating shall be 300 percent of the operating pressure. The sensor/transmitter assembly accuracy shall be plus or minus two percent of full scale. The transmitter shall be a two-wire, loop-powered device. The transmitter shall produce a linear 4-to-20 mAdc output corresponding to the required pressure measurement.

2.8.7 Thermowells

Thermowells shall be Series 300 stainless steel with threaded brass plug and chain, 2 inch lagging neck and extension type well. Inside diameter and insertion length shall be as required for the application.

2.8.8 Sunshields

Sunshields for outside air temperature sensing elements shall prevent the sun from directly striking the temperature sensing elements. The sunshields shall be provided with adequate ventilation so that the sensing element responds to the ambient temperature of the surroundings. The top of each sunshield shall have a galvanized metal rainshield projecting over the face of the sunshield. The sunshields shall be painted white.

2.9 THERMOSTATS

Thermostat ranges shall be selected so that the setpoint is adjustable without tools between plus or minus 10 degrees F of the setpoint shown. Thermostats shall be electronic or electric.

2.9.1 Nonmodulating Room Thermostats

Contacts shall be single-pole double-throw (SPDT), hermetically sealed, and wired to identified terminals. Maximum differential shall be 5 degrees F. Room thermostats shall be enclosed with separate locking covers (guards).

2.9.2 Microprocessor Based Room Thermostats

Microprocessor based thermostats shall have built-in keypads for scheduling of day and night temperature settings. Access to the scheduling mode shall be by a password control code. When out of the scheduling mode, thermostats shall have continuous display of time, with AM and PM indicator, continuous display of day of week, and either continuous display of room temperature with display of temperature setpoint on demand, or continuous display of temperature setpoint with display of room temperature on demand. In the programmable mode, the display shall be used for interrogating time program ON-OFF setpoints for all seven days of the week. The time program shall allow two separate temperature setback intervals per day. The thermostats shall have a means for temporary and manual

override of the program schedule, with automatic program restoration on the following day. Thermostats shall have a replaceable battery to maintain the timing and maintain the schedule in memory for one year in the event of a power outage. Maximum differential shall be 2 degrees F. When used for heat pump applications, the thermostat shall have an emergency heat switch.

2.9.3 Modulating Room Thermostats

Modulating room thermostats shall have either one output signal, two output signals operating in unison, or two output signals operating in sequence, as required for the application. Each thermostat shall have an adjustable throttling range of 4 to 8 degrees F for each output. Room thermostats shall be enclosed with separate locking covers (guards).

2.9.4 Nonmodulating Capillary Thermostats and Aquastats

Each thermostat shall have a capillary length of at least 5 feet, shall have adjustable direct-reading scales for both setpoint and differential, and shall have a differential adjustable from 6 to 16 degrees F. Aquastats shall be of the strap on type, with 10 degrees F fixed differential.

2.9.5 Freezestats

Freezestats shall be manual reset, low temperature safety thermostats, with NO and NC contacts and a 20 foot element which shall respond to the coldest 18 inch segment.

2.9.6 Modulating Capillary Thermostats

Each thermostat shall have either one output signal, two output signals operating in unison, or two output signals operating in sequence, as required for the application. Thermostats shall have adjustable throttling ranges of 4 to 8 degrees F for each output.

2.9.7 Fan-Coil Unit Room Thermostats

Fan-coil unit room thermostats shall be of the low voltage type with locking covers, and shall be wall mounted not less than 60 inches above the floor, unless otherwise shown. Electrical rating shall not exceed 2.5 amperes at 30 volts ac. Housing shall be corrosion resisting metal or molded plastic. Transformer and fan relay shall be provided for the proper operation of each thermostatic control system as necessary to suit the design of the control system using the thermostats specified below. Either separate heating thermostats and separate cooling thermostats or dual element heating cooling thermostats may be provided. Motor speed switches shall be provided for three-speed fan control.2.9.7.1 Combination Thermostat

Fan coil unit combination heating-cooling thermostats shall be provided with separate temperature sensing elements for each system, and shall have a single-pole, single-throw (SPST) switch, hermetically sealed and actuated by a bimetallic or bellows type element. Each element shall operate switches to provide single stage control for heating and cooling. Heating and cooling circuits shall be electrically isolated from each other. Scales and ranges shall be as specified for individual thermostats. Thermostats shall contain, or a subbase shall be provided which contains, selector switches for Heat-Off-Cool. A changeover controller providing automatic summer-winter changeover for thermostats by sensing the supplied

fluid temperature shall be provided. A limited range heating-cooling dead band thermostat shall control cooling when temperature is above the upper setpoint and heating when temperature is below the lower setpoint and shall have a dead band, with no heating or cooling, when temperature is between the setpoints. Setpoint adjustment shall be concealed.2.10 PRESSURE SWITCHES AND SOLENOID VALVES

2.10.1 Pressure Switches

Each switch shall have an adjustable setpoint with visible setpoint scale. Range shall be as shown. Differential adjustment shall span 20 to 40 percent of the range of the device.

2.10.2 Differential-Pressure Switches

Each switch shall be an adjustable diaphragm-operated device with two SPDT contacts, with taps for sensing lines to be connected to duct pressure fittings designed to sense air pressure. These fittings shall be of the angled-tip type with tips pointing into the air stream. The setpoint shall not be in the upper or lower quarters of the range and the range shall not be more than three times the setpoint. Differential shall be a maximum of 0.15 inch water gauge at the low end of the range and 0.35 inch water gauge at the high end of the range.

2.10.3 Pneumatic Electric (PE) Switches

Each switch shall have an adjustable setpoint range of 3 to 20 psig with a switching differential adjustable from 2 to 5 psig. The switch action shall be SPDT.

2.10.4 Solenoid-Operated Pneumatic (EP) Valves

Each valve shall have three-port operation: common, normally open, and normally closed. Each valve shall have an outer cast aluminum body and internal parts of brass, bronze, or stainless steel. The air connection shall be a 3/8 inch NPT threaded connection. Valves shall be rated for 50 psig when used in a control system that operates at 25 psig or less, or 150 psig when used in a control system that operates in the range of 25 to 100 psig.

2.11 INDICATING DEVICES

2.11.1 Thermometers

2.11.1.1 Piping System Thermometers

Piping system thermometers shall have brass, malleable iron or aluminum alloy case and frame, clear protective face, permanently stabilized glass tube with indicating-fluid column, white face, black numbers, and a 9 inch scale. Thermometers for piping systems shall have rigid stems with straight, angular, or inclined pattern.

2.11.1.2 Piping System Thermometer Stems

Thermometer stems shall have expansion heads as required to prevent breakage at extreme temperatures. On rigid-stem thermometers, the space between bulb and stem shall be filled with a heat-transfer medium.

2.11.1.3 Nonaveraging Air-Duct Thermometers

Air-duct thermometers shall have perforated stem guards and 45-degree adjustable duct flanges with locking mechanism.

2.11.1.4 Not Used

2.11.1.5 Accuracy

Thermometers shall have an accuracy of plus or minus one percent of scale range. Thermometers shall have a range suitable for the application.

2.11.2 Pressure Gauges

Gauges shall be 2 inch (nominal) size, back connected, suitable for field or panel mounting as required, shall have black legend on white background, and shall have a pointer traveling through a 270-degree arc. Accuracy shall be plus or minus three percent of scale range. Gauges shall meet requirements of ASME B40.1.

2.11.2.1 Not Used

2.11.2.2 Not Used

2.11.2.3 Hydronic System Gauges

Gauges for hydronic system applications shall have ranges and graduations as shown.

2.11.3 Low Differential Pressure Gauges

Gauges for low differential pressure measurements shall be a minimum of 3.5 inch (nominal) size with two sets of pressure taps, and shall have a diaphragm-actuated pointer, white dial with black figures, and pointer zero adjustment. Gauges shall have ranges and graduations as shown. Accuracy shall be plus or minus two percent of scale range.

2.12 CONTROL DEVICES AND ACCESSORIES

2.12.1 Relays

Control relay contacts shall have utilization category and ratings selected for the application, with a minimum of two sets of contacts (two normally open, two normally closed) enclosed in a dustproof enclosure. Relays shall be rated for a minimum life of one million operations. Operating time shall be 20 milliseconds or less. Relays shall be equipped with coil transient suppression devices to limit transients to 150 percent of rated coil voltage. Time delay relays shall be 2PDT with eight-pin connectors, dust cover, and a matching rail-mounted socket. Adjustable timing range shall be 0 to 5 minutes. Power consumption shall not be greater than three watts.

2.12.2 Current to Pneumatic (IP) Transducers

The transducers shall be two-wire current-to-pressure transmitters that convert a 4-to-20 mAdc input signal to a 3 to 15 psig, or a 15 to 3 psig, pneumatic output, with a conversion accuracy of plus or minus two percent of full scale, including linearity and hysteresis. Input impedance shall not exceed 250 ohms. Air consumption shall not be greater than 0.25 scfm.

2.12.3 Joule or Watthour Meters

Watthour meters shall be in accordance with ANSI C12.1 and have pulse initiators for remote monitoring of Watthour consumption. Pulse initiator shall consist of form C contacts with a current rating not to exceed two amperes and voltage not to exceed 500 V, with combinations of VA not to exceed 100 VA, and a life rating of one billion operations. Meter sockets shall be in accordance with ANSI C12.1.

2.12.4 Joule or Watthour Meters with Demand Register

Meters shall be in accordance with ANSI C12.1 and shall have pulse initiators for remote monitoring of Watthour consumption and instantaneous demand. Pulse initiators shall consist of form C contacts with a current rating not to exceed two amperes and voltage not to exceed 500 V, with combinations of VA not to exceed 100 VA, and a life rating of one billion operations. Meter sockets shall be in accordance with ANSI C12.1

2.12.5 Joule or Watthour Transducers

Watthour transducers shall have an accuracy of plus or minus 0.25 percent for kW and kWh outputs from full lag to full lead power factor. Input ranges for kW and kWh transducers shall be selectable without requiring the changing of current or potential transformers. The output shall be 4 to 20 mAdc.

2.12.6 Current Sensing Relays

Current sensing relays shall provide a normally-open contact rated at a minimum of 50 volts peak and 1/2 ampere or 25 VA, noninductive. There shall be a single hole for passage of current carrying conductors. The devices shall be sized for operation at 50 percent rated current based on the connected load. Voltage isolation shall be a minimum of 600 volts.

2.13 Not Used2.14 DIRECT DIGITAL CONTROL (DDC) HARDWARE

All functions, constraints, data base parameters, operator developed programs and any other data shall be downloadable from a portable workstation/tester or the central workstation/tester to network control panels, RIU's, universal programmable controllers, and unitary controllers. Download shall be accomplished through both the primary network and the local DDC portable workstation/tester port.

2.14.1 Network Control Panel

Network control panels shall be microcomputer-based with sufficient memory provided to perform all specified and shown network control panel functions and operations, including spare capacity for all spares and its I/O functions specified. Each network control panel and remote I/O units (RIU) shall have a minimum of 10% of its I/O functions as spare capacity but not less than 2 of each type used in each. The type of spares shall be in the same proportion as the implemented I/O functions on the panel, but in no case shall there be less than two spare points of each type. The panel I/O functions shall be furnished complete, with no changes or additions necessary to support implementation of spare functions. Output relays associated with digital signals shall be considered part of the I/O function, whether physically mounted in the enclosure or separately mounted. Implementation of spare points shall necessitate only providing the additional field sensor or control device, field wiring including

connection to the system, and point definition assignment by the operator using the central workstation/tester or portable workstation/tester. The panel shall contain all necessary I/O functions to connect to field sensors and control panels. I/O function operation shall be fully supervised to detect I/O function failures. Network control panels shall operate in an independent stand-alone mode, which is defined as all network control panel operations performed by the network control panel without any continuing input from other Direct digital controls or portable workstation/tester. The network control panel shall be capable of controlling a mix of at least 32 RIUs, unitary controllers, and universal programmable controllers.

2.14.1.1 Integral Features

The network control panel shall include:

a. Main power switch.

b. Power on indicator.

c. Portable workstation/tester port, connector, and if necessary power supply.

d. Manufacturers control network port.

e. On-Off-Auto switches for each DO which controls a device. These switches shall be mounted in the field panel, with the exception of motors, for which the switch shall be mounted at the motor control center. On-Off-Auto switches are not required for DO associated with a status or alarm such as pilot lights. The status of these switches shall be available to the panel for further processing.

f. Minimum-Maximum-Auto switches, or Auto-Manual switches with manual output override, for each AO. The status of these shall be available to the panel for further processing.

g. An intrusion detection device, connected as an alarm.

2.14.1.2 Communication Interfaces

The following communication capabilities shall function simultaneously.

a. Manufacturers Control Network. Manufacturers control network communications interfaces for each data transmission systems (DTS) circuit between network control panels and RIUs, unitary controllers, and universal programmable controllers, shall be provided. Communication interfaces shall be provided between each network control panel and associated I/O functions. The DTS will provide for transmission speeds necessary to comply with performance requirements specified. DTS equipment shall be installed in the network control panel enclosure.

b. Portable Workstation/Tester Port. A communications port for interfacing to a portable workstation/tester shall be provided. Network control panel workstation/tester port other than RS-232,shall be converted to RS-232, including cabling and power supply, and shall be permanently installed in the panel.

c. Primary Network Port. The network control panel shall either have a built in primary network Port or be capable of accepting a primary network port expansion card for future networking to a base wide utility

monitoring and control system (UMCS). The primary network port expansion card shall be either Ethernet (IEEE802.3) or ARCNET.

2.14.1.3 Memory and Real Time Clock (RTC) Backup

The network control panel memory and real time clock functions shall continue to operate for a minimum of 72 hours in the event of a power failure. If rechargeable batteries are provided, automatic charging of batteries shall be provided. Whenever a either a permanent workstation/tester or portable workstation/tester is monitoring the network control panel, a low battery alarm message shall be sent to it.

2.14.1.4 Duplex Outlet

A single phase, 120 Vac electrical service outlet for use with test equipment shall be furnished either inside or within 6 feet of the network control panel enclosure.

2.14.1.5 Locking Enclosures

Locking type mounting cabinets with common keying shall be furnished for each network control panel.

2.14.1.6 Failure Mode

Upon failure of the network control panel, either due to failure of the network control panel hardware or of the manufacturers control network, the network control panel shall revert to the failure mode as shown.

a. Manufacturers Control Network Failure: Upon failure of the manufacturers control network, the network control panel shall operate in an independent stand-alone mode.

b. Network Control Panel Hardware Failure: Upon failure of the network control panel hardware, the network control panel shall cease operation and stop communications with other network control panels, RIUs, unitary controllers and universal programmable controllers connected to the affected network control panel. The affected network control panel shall respond to this failure as specified and shown.

2.14.2 RIU

The RIU shall be functionally a part of the network control panel as specified, but may be remotely located from the network control panel and communicate over a dedicated communication circuit. When remotely located, the I/O functions shall be subject to the same requirements as for the network control panel hardware. RIUs shall be used to connect remote inputs and outputs to a network control panel and shall contain all necessary I/O functions to connect to field sensors and control devices. RIU operation shall be fully supervised by the network control panel to detect failures. Each RIU shall have a minimum of 10 % of its I/O functions as spare capacity. The type of spares shall be in the same proportion as the implemented I/O functions on the RIU, but in no case shall there be less than two spare points of each type. The RIU shall be furnished complete, with no changes or additions necessary to support implementation of spare functions. Output relays associated with digital signals shall be considered part of the I/O function, whether physically mounted in the enclosure or separately mounted. Implementation of spare points by others shall require only providing the additional field sensor

or control device, field wiring including connection to the system, and point definition assignment by the operator. The RIU shall either report the status of all connected points on each scan, or report the status of all points which have changed state or value since the previous scan.

2.14.2.1 Integral Features

The RIU shall include:

a. Main power switch.

b. Power on indicator.

c. Portable workstation/tester port, connector, and if necessary power supply.

d. Manufacturers control network port.

e. On-Off-Auto switches for each DO which controls a device. These switches shall be mounted in the RIU, with the exception of motors, for which the switch shall be mounted at the motor control center. On-Off-Auto switches are not required for DO associated with a status or alarm such as pilot lights. The status of these switches shall be available to the RIU for further processing.

f. Minimum-Maximum-Auto switches, or Auto-Manual switches with manual output override, for each AO. The status of these shall be available to the panel for further processing.

g. An intrusion detection device, connected as an alarm.

2.14.2.2 Duplex Outlet

A single phase, 120 Vac electrical service outlet for use with test equipment shall be furnished either inside or within 6 feet of the RIU.

2.14.2.3 Locking Enclosures

Locking type mounting cabinets with common keying shall be furnished for each RIU.

2.14.2.4 Failure Mode

Upon failure of the RIU, either due to failure of the RIU hardware or of the DTS, the RIU shall revert to the failure mode shown.

2.14.3 Universal Programmable Controller (UPC)

The universal programmable controller shall be a microprocessor based controller designed and programmed to control and monitor systems as shown. Resident programs shall be contained in reprogramable nonvolatile memory. Each universal programmable controller shall contain necessary power supplies, transformers, memory, I/O functions and communications interfaces necessary to perform its required functions and to provide control and monitoring of connected equipment and devices. It shall contain all necessary I/O functions to connect to field sensors and controls. I/O operation shall be fully supervised to detect I/O function failures. It shall provide for operation as a device connected to the system via the manufacturers control network.

2.14.3.1 Integral Features

The universal programmable controller shall include as a minimum:

a. Main power switch.

b. Power on indicator.

c. Portable workstation/tester port, connector, and if necessary power supply.

d. Manufacturers control network port.

e. I/O functions

(1) 8 DI

(2) 4 DO

(3) 8 AI

(4) 4 AO

(5) 1 PA

f. On-Off-Auto switches for each DO which controls a device. These switches shall be mounted in the universal programmable controller, with the exception of motors, for which the switch shall be mounted at the motor control center. On-Off-Auto switches are not required for DO associated with a status or alarm such as pilot lights. The status of these switches shall be available to the panel for further processing.

g. Minimum-Maximum-Auto switches, or Auto-Manual switches with manual output override, for each AO. The status of these shall be available to the panel for further processing.

2.14.3.2 Communication Interfaces

The UPC shall have the following communication capabilities which shall function simultaneously.

a. Manufacturers Control Network. The manufacturers control network communications interface for a data transmission systems (DTS) circuit between the UPC and a network control panels shall be provided. The DTS will provide for transmission speeds necessary to comply with performance requirements specified. DTS equipment shall be installed in the UPC Panel enclosure.

b. Portable Workstation/Tester Port. A communications port for interfacing to a portable workstation/tester shall be provided. A UPC workstation/tester port other than RS-232, shall be converted to RS-232, including cabling and power supply, and shall be permanently installed in the panel.

2.14.3.3 Memory and RTC Backup

The UPC memory and real time clock functions shall continue to operate for a minimum of 72 hours in the event of a power failure. If rechargeable

batteries are provided, automatic charging of batteries shall be provided. Whenever a either a permanent workstation/tester or portable workstation/tester is monitoring the network control panel, a low battery alarm message shall be sent to it.

2.14.3.4 Specific Requirements

Each universal programmable controller shall be accessible for purposes of application selection, control parameters, set point adjustment, and monitoring from any DDC controller connected to the same manufacturers control network as the universal programmable controller. This shall be done using a portable workstation/tester connected to a portable workstation/tester port either directly or via modem.

2.14.3.5 Locking Enclosures

Locking type mounting cabinets with common keying shall be furnished for each enclosure.

2.14.3.6 Failure Mode

Upon failure of the universal programmable controller, it shall revert to the failure mode of operation as shown.

2.14.4 Unitary Controller

The unitary controller shall be a microprocessor based, stand-alone, dedicated purpose controller, communicating with the network control panel, designed and programmed to control air distribution system mixing boxes, terminal units, heat pumps, fan coil units, self-contained DX units or VAV boxes as shown. Each unitary controller shall contain resident programs in nonvolatile memory for each specific application implemented. Each unitary controller shall contain necessary power supplies, transformers, memory, I/O functions and communications interfaces necessary to perform its required functions and to provide control and monitoring of connected equipment and devices. It shall contain all necessary I/O functions to connect to field sensors and controls. I/O operation shall be fully supervised to detect I/O function failures and shall provide for operation as a device connected to the network control panel via the manufacturers control network.

2.14.4.1 Integral Features

The unitary controller shall include:

a. Main power switch.

b. Power on indicator.

c. Portable workstation/tester port, connector, and power supply.

d. Manufacturers control network port.

e. All I/O functions required to implement the requirements as shown.

f. On-Off-Auto switches for each DO which controls a device. These switches shall be mounted in the field panel, with the exception of motors, for which the switch shall be mounted at the motor control center. On-Off-Auto switches are not required for DO associated with a status or

alarm such as pilot lights. The status of these switches shall be available to the panel for further processing.

g. Minimum-Maximum-Auto switches, or Auto-Manual switches with manual output override, for each AO. The status of these shall be available to the panel for further processing.

2.14.4.2 Communication Interfaces

The unitary controller shall have the following communication capabilities which shall function simultaneously.

a. Manufacturers Control Network. The manufacturers control network communications interface for a data transmission systems (DTS) circuit between the unitary controller and a network control panel shall be provided. The DTS will provide for transmission speeds necessary to comply with performance requirements specified. DTS equipment shall be installed in the unitary control panel enclosure.

b. Portable Workstation/Tester Port. A communications port for interfacing to a portable workstation/tester shall be provided. A unitary controller workstation/tester port other than RS-232, shall be converted to RS-232, including cabling and power supply, and shall be permanently installed in the panel. For unitary controller applications where the controller is not mounted in an enclosure, such as for fan-coil units or VAV terminal units, a portable conversion device for an RS-232 connection to the portable workstation/tester may be provided.

2.14.4.3 Specific Requirements

Unitary controller components for new air distribution terminal units shall be furnished to the air distribution terminal unit manufacturer for factory mounting and calibration. Existing air distribution terminal units shall be controlled by field installed unitary controllers.

a. Accessibility and Interfaces: Each unitary controller shall be accessible for purposes of application selection, control parameters, set point adjustment, and monitoring using a portable workstation/tester connected to the manufacturers control network. They shall also be accessible with a portable workstation/tester connected to the unitary controller portable workstation/tester port.

2.14.4.4 Failure Mode

Upon failure of the unitary controller, it shall revert to the failure mode of operation as shown.

2.14.5 Air Cooled CondenserPanel

Air Cooled Condenser control panel shall be microprocessor-based and shall provide, both locally and through the Manufacturers Control Network, the control, monitoring, and safety equipment functions provided by the chiller manufscturer's control panel(s) (two communications ports total). The

chiller control panel instrumentation and control ranges and accuracies shall match those of the chiller manufacturer's control devices. The chiller panel shall have a communication port for interface to a Portable Workstation/Tester through either the Manufacturers Control Network or modem for condenser(s) start/stop, chilled water temperature reset, and monitoring of chiller operating status, alarms, and power consumption.

2.14.6 Not Used

2.14.7 I/O Functions

2.14.7.1 DDC Hardware I/O Functions

I/O Functions shall be provided as part of the DDC system and shall be in accordance with the following:

a. The analog input (AI) function shall monitor each analog input, perform A-to-D conversion, and hold the digital value in a buffer for interrogation. The A-to-D conversion shall have a minimum resolution of 10 bits plus sign. Signal conditioning shall be provided for each analog input. Analog inputs shall be individually calibrated for zero and span, in hardware or in software. The AI shall incorporate common mode noise rejection of 50 dB from 0 to 100 Hz for differential inputs, and normal mode noise rejection of 20 dB at 60 Hz from a source impedance of 10,000 ohms. Input ranges shall be within the range of 4-to-20 mAdc.

b. The analog output (AO) function shall accept digital data, perform D-to-A conversion, and output a signal within the range of 4-to-20 mAdc. D-to-A conversion shall have a minimum resolution of eight bits plus sign. Analog outputs shall be individually calibrated for zero and span. Short circuit protection on voltage outputs and open circuit protection on current outputs shall be provided. An individual gradual switch for manual override of each analog output and means of physically securing access to these switches shall be provided. Each AO shall have a three-position switch for selection of the DDC control signal, no control, or a locally generated control signal for connection to the controlled device. Feedback shall be provided to the system as to the status of the output (manual control or automatic). Switches for pneumatic control outputs shall provide a connection for an externally generated pneumatic signal. All switches shall be either of a key operated design with the same keying system used for other outputs or otherwise suitably protected from unauthorized access.

c. The digital input (DI) function shall accept on-off, open-close, or other change of state (two state data) indications. Isolation and protection against an applied steady-state voltage up to 180 Vac peak shall be provided.

d. The digital output (DO) function shall provide contact closures for momentary and maintained operation of output devices. Closures shall have a minimum duration of 0.1 second. DO relays shall have an initial breakdown voltage between contacts and coil of at least 500 V peak. Electromagnetic interference suppression shall be furnished on all output lines to limit transients to nondamaging levels. Protection against an applied steady-state voltage up to 180 Vac peak shall be provided. Minimum contact rating shall be one ampere at 24 Vac. Key locked HOA switches shall be provided for manual override of each digital output. Feedback shall be provided to the system as to the status of the output (manual control or automatic). Switches shall be common keyed.

e. The pulse accumulator function shall have the same characteristics as the DI. In addition, a buffer shall be provided to totalize pulses and allow for interrogation by the DDC system. The pulse accumulator shall accept rates up to 20 pulses per second. The totalized value shall be reset to zero upon operator's command.

f. Signal conditioning for sensors shall be provided as specified.

g. The binary coded decimal (BCD) function: The BCD function shall have the same characteristics as the DI, except that, in addition, a buffer shall be provided to totalize inputs and allow for interrogation by the network control panel. The BCD function shall have 16-channel optically isolated buffered inputs to read four digit numbers. The BCD function shall accumulate inputs at rates up to 10 inputs per second.

2.14.7.2 Failure Mode

Upon failure of the I/O function, including data transmission failure, logic power supply failure, DDC processor malfunction, software failure, interposing relay power failure, or any other failure which prevents stand alone operation of any DDC normally capable of stand alone operation, connected outputs shall be forced to the failure mode shown.

2.14.8 Portable Workstation/Tester

A portable workstation/tester shall be provided and shall be able to connect to any DDC hardware. The portable workstation/tester shall consist of a portable computer with a nominal 10 inch active color matrix liquid crystal display, capable of displaying up to 256 colors at a minimum resolution of 640 X 480 pixels, an external VGA monitor port, 32 bit microprocessor operating at a minimum of 100 MHZ. The portable workstation/tester shall have, as a minimum, a 1200 MB hard drive, 16 megabytes of memory, integral pointing device, serial and parallel ports, color VGA video port for an external color monitor, 3.5 inch floppy disk drive, modem, PCMCIA type 3 slot, rechargeable battery, battery charger and 120 Vac power supply. It shall include carrying case, extra battery, charger and a compatible network adapter. The workstation/tester shall:

a. Run DDC diagnostics.

b. Load all DDC memory resident programs and information, including parameters and constraints.

c. Display any AI, DI, AO, DO, or PA point in engineering units for analog points or status for digital points.

d. Control any AO or DO.

e. Provide an operator interface, contingent on password level, allowing the operator to use full English language words and acronyms, or an object oriented graphical user interface.

f. Display database parameters.

g. Modify database parameters.

h. Accept DDC software and information for subsequent loading into a specific DDC. Provide all necessary software and hardware required to

support this function, including an EIA ANSI/EIA/TIA 232-E port.

i. Disable/enable each DDC.

j. Perform all workstation functions as specified.

2.14.9 Central Workstation/Tester

A central workstation/tester shall be provided and shall be able to communicate any network control panel via the primary network. The central workstation/tester shall be functionally equivalent to the portable workstation/tester but is intended to be a stationary unit. The central workstation/tester shall consist of a central computer with a nominal 14 inch VGA color display, capable of displaying up to 256 colors at a minimum resolution of 640 X 480 pixels, 32 bit microprocessor operating at a minimum of 100 MHZ. The central workstation/tester shall have, as a minimum, a 2100 MB hard drive, 32 megabytes of memory, integral pointing device, serial and parallel ports, color VGA video port for an external color monitor, 3.5 inch floppy disk drive, modem, PCMCIA type three slot, rechargeable battery, battery charger, 120 Vac power supply and network adapter (Ethernet IEEE802.3 or ARCNET). The central workstation/tester shall:

a. Run DDC diagnostics.

b. Load all DDC memory resident programs and information, including parameters and constraints.

c. Display any AI, DI, AO, DO, or PA point in engineering units for analog points or status for digital points.

d. Control any AO or DO.

e. Provide an operator interface, contingent on password level, allowing the operator to use full English language words and acronyms, or an object oriented graphical user interface.

f. Display database parameters.

g. Modify database parameters.

h. Accept DDC software and information for subsequent loading into a specific DDC. Provide all necessary software and hardware required to support this function, including an EIA ANSI/EIA/TIA 232-E port.

i. Disable/enable each DDC.

j. Perform all workstation functions as specified.

2.14.10 Data Terminal Cabinet (DTC)

The DTC shall be an independent metallic enclosure not physically part of the network control panel/RIU as shown. The DTC shall be sized to accommodate the number of I/O functions required for each network control panel/RIU, including installed spares, plus 10% expansion for each type of I/O function provided. The DTC shall be divided into analog input and output groups and digital input and output groups. The DTC shall be provided with double sided screw type terminal strips. One side of the terminal strip shall be used for termination of field wiring from

instrumentation-mentation and controls. The other side shall be used to connect the DTC to the network control panel/RIU. Terminal strips shall have individual terminal identification numbers. The DTC shall be a locking type mounting enclosure, with common keying and door switch wired to an input for intrusion alarm annunciation at the central station. DTC keying shall be identical to network control panel/RIU keying.

2.15 DDC SOFTWARE

All DDC software described in this specification shall be furnished as part of the complete DDC System.

2.15.1 Operating System

Each DDC shall contain an operating system that controls and schedules that DDC's activities in real time. The DDC shall maintain a point database in its memory that includes all parameters, constraints, and the latest value or status of all points connected to that DDC. The execution of DDC application programs shall utilize the data in memory resident files. The operating system shall include a real time clock function that maintains the seconds, minutes, hours, date and month, including day of the week. Each DDC real time clock shall be automatically synchronized with the network control panel real time clock at least once per day to plus or minus 10 seconds. When the network control panel is connected to a central workstation/tester, the network control panel RTC shall be updated by the central workstation/tester RTC. The time synchronization shall be accomplished without operator intervention and without requiring system shutdown. The operating system shall allow loading of software, data files data entry, and diagnostics from the central workstation/tester both locally through the central workstation/tester port and remotely through a network control panel and the manufacturers control network.

2.15.1.1 Startup

The DDC shall have startup software that causes automatic commencement of operation without human intervention, including startup of all connected I/O functions. A DDC restart program based on detection of power failure at the DDC shall be included in the DDC software. Upon restoration of power to the DDC, the program shall restart equipment and restore loads to the state at time of power failure, or to the state as commanded by time programs or other overriding programs. The restart program shall include start time delays between successive commands to prevent demand surges or overload trips. The startup software shall initiate operation of self-test diagnostic routines. Upon failure of the DDC, if the database and application software are no longer resident or if the clock cannot be read, the DDC shall not restart and systems shall remain in the failure mode indicated until the necessary repairs are made. If the database and application programs are resident, the DDC shall resume operation after an adjustable time delay of from 0 to 600 seconds. The startup sequence for each DDC shall include a unique time delay setting for each control output when system operation is initiated.

2.15.1.2 Operating Mode

Each DDC shall control and monitor functions as specified, independent of communications with other DDC. This software shall perform all DDC functions and DDC resident application programs as specified using data obtained from I/O functions and based upon the DDC real time clock function. When communications circuits between the DDC are operable, the

DDC shall obtain real time clock updates and any required global data values transmitted from other network control panels. The DDC software shall execute commands after performing constraints checks in the DDC. Status and analog values, including alarms and other data shall be transmitted from other network control panels when communications circuits are operable. If communications are not available, each DDC shall function in stand-alone mode and operational data, including the latest status and value of each point and results of calculations, normally transmitted from other network control panels shall be stored for later transmission to the network control panel. Storage for the latest 256 values shall be provided at each network control panel. Each DDC shall accept software downloaded from the network control panel. Constraints shall reside at the DDC.

2.15.1.3 Failure Mode

Upon failure for any reason, each DDC shall perform an orderly shutdown and force all DDC outputs to a predetermined (failure mode) state, consistent with the failure modes shown and the associated control device.

2.15.2 Functions

The Contractor shall provide software necessary to accomplish the following functions, as appropriate, fully implemented and operational, within each network control panel, RIU, unitary controller and universal programmable controller.

a. Scanning of inputs.

b. Control of outputs.

c. Reporting of analog changes outside a selectable differential.

d. Reporting of unauthorized digital status.

e. Reporting of alarms automatically to network control panel.

f. Reporting of I/O status to network control panel upon request.

g. Maintenance of real time, updated by the network control panel at least once a day.

h. Communication with the network control panel.

i. Execution of DDC resident application programs.

j. Averaging or filtering of AIs.

k. Constraints checks (prior to command issuance).

l. Diagnostics.

m. Portable workstation/tester operation as specified.

n. Reset of PA by operator based on time and value.

2.15.2.1 Analog Monitoring

The system shall measure and transmit analog values including calculated analog points. An analog change in value is defined as a change exceeding

a preset differential value as specified. The record transmitted for each analog value shall include a readily identifiable flag which indicates the abnormal status of the value when it deviates from operator selectable upper and lower analog limits. Analog values shall be expressed in proper engineering units with sign. Engineering units conversions shall be provided for each measurement. Each engineering units conversion set shall include range, span, and conversion equation. A vocabulary of engineering unit descriptors shall be provided, using at least three alphanumeric characters to identify information in the system. The system shall support 255 different engineering units.

2.15.2.2 Logic (Virtual) Points

Logic (virtual) points shall be software points entered in the point database which are not directly associated with a physical I/O function. Logic (virtual) points shall be analog or digital points created by calculation from any combination of digital and analog points, or other data having the properties of real points, including alarms, without the associated hardware. Logic (virtual) points shall be defined or calculated and entered into the database by the Contractor. The calculated analog point shall have point identification in the same format as any other analog point. The calculated point shall be used in any program where the real value is not obtainable directly. Constants used in calculations shall be changeable on-line by the operator. Calculated point values shall be current for use by the system within 10 seconds of the time of any input changes.

2.15.2.3 State Variables

If an analog point represents more than two (up to eight) specific states, each state shall be nameable. For example, a level sensor shall be displayed at its measured engineering units plus a state variable with named states usable in programs or for display such as low alarm/low/normal/high/high alarm.

2.15.2.4 Analog Totalization

Any analog point shall be operator assignable to the totalization program. Up to eight analog values shall be totalized within a selectable time period. At the end of the period, the totals shall be stored. Totalization shall then restart from zero for the next time period. The program shall keep track of the peak and total value measured during the current period and for the previous period. The operator shall be able to set or reset each totalized value individually. The time period shall be able to be operator defined, modified or deleted on-line.

2.15.2.5 Energy Totalization

The system shall calculate the heat energy in Btus, for each energy source consumed by the mechanical systems specified, totalize the calculated Btus, the instantaneous rate in Btus per hour, and store totals in thousands of Btus (MBtu). The Btus calculated shall be totalized for an adjustable time period. The time period shall be defined uniquely for each Btu totalization.

2.15.2.6 Trending

Any analog or calculated point shall be operator assignable to the trend program. Up to eight points shall be sampled at individually assigned

intervals, selectable between one minute and two hours. A minimum of the most recent 128 samples of each trended point shall be stored. The sample intervals shall be able to be defined, modified, or deleted on-line.

2.15.3 I/O Point Database/Parameter Definition

Each I/O point shall be defined in a database residing in the DDC. The definition shall include all physical parameters associated with each point. Each point shall be defined and entered into the database by the Contractor, including as applicable:

a. Name.

b. Device or sensor type (i.e., sensor, control relay, motors).

c. Point identification number.

d. Unit.

e. Building number.

f. Area.

g. Island.

h. DDC number and channel address.

i. KW (running).

j. KW (starting).

k. Sensor range.

l. Controller range.

m. Sensor span.

n. Controller span.

o. Engineering units conversion (scale factor).

p. Setpoint (analog).

q. High reasonableness value (analog).

r. Low reasonableness value (analog).

s. High alarm limit differential (return to normal).

t. Low alarm limit differential (return to normal).

u. High alarm limit (analog).

v. Low alarm limit (analog).

w. Alarm disable time period upon startup or change of setpoint.

x. Analog change differential (for reporting).

y. Alarm class and associated primary message text.

z. High accumulator limit (pulse).

aa. Status description.

bb. Run time target.

cc. Failure mode as specified and shown.

dd. Constraints as specified.

2.15.4 Alarm Processing

Each DDC shall have alarm processing software for AI, DI, and PA alarms for all real and virtual points connected to that DDC.

2.15.4.1 Digital Alarms Definition

Digital alarms are those abnormal conditions indicated by DIs as specified and shown.

2.15.4.2 Analog Alarms Definition

Analog alarms are those conditions higher or lower than a defined value, as measured by an AI. Analog readings shall be compared to predefined high and low limits, and alarmed each time a value enters or returns from a limit condition. Unique high and low limits shall be assigned to each analog point in the system. Analog alarm limits shall be stored in the DDC database. Each analog alarm limit shall have an associated unique limit differential specifying the amount by which a variable must return into the proper operating range before being annunciated as a return-to-normal-state. All limits and differentials shall be entered on-line by the operator in limits of the measured variable, without interruption or loss of monitoring of the point concerned. The program shall automatically change the high or low limits or both, of any analog point, based on time scheduled operations as specified, allowing for a time interval before the alarm limit becomes effective. In CPA applications, key the limit to a finite deviation traveling with the setpoint. The system shall automatically suppress analog alarm reporting associated with a digital point when that digital point is turned off.

2.15.4.3 Pulse Accumulator Alarms Definition

Pulse accumulator alarms are those conditions calculated from totalized values of accumulator inputs or PA input rates that are outside defined limits as specified and shown. PA totalized values shall be compared to predefined limits and alarmed each time a value enters a limit condition. Unique limits shall be assigned to each PA point in the system. Limits shall be stored in the DDC database.

2.15.5 Constraints

2.15.5.1 Equipment Constraints Definitions

Each control point in the database shall have DDC resident constraints defined and entered by the Contractor, including as applicable:

a. Maximum starts (cycles) per hour.

b. Minimum off time.

c. Minimum on time.

d. High limit (value in engineering units).

e. Low limit (value in engineering units).

2.15.5.2 Constraints Checks

Control devices connected to the system shall have the DDC memory resident constraints checked before each command is issued to insure that no equipment damage will result from improper operation. Each command shall be executed by the DDC only after all constraints checks have been passed. Each command point shall have unique constraints assigned. High and low "reasonableness" values or one differential "rate-of-change" value shall be assigned to each AI. Values outside the reasonableness limits shall be rejected and an alarm message sent to the network control panel or portable workstation/tester. Status changes and analog point values shall be reported to the workstation upon operator request, such as for reports, alphanumeric displays, graphic displays, and application programs. Each individual point shall be capable of being selectively disabled by the operator from a workstation/tester. Disabling a point shall prohibit monitoring and automatic control of that point.

2.15.6 Diagnostics

Each DDC shall have self-test diagnostic routines implemented in firmware. The tests shall include routines that exercise memory. Diagnostic software shall be usable in conjunction with the central workstation/tester and portable workstation/tester. The software shall display messages in English to inform the tester's operator of diagnosed problems.

2.15.7 Summer-Winter Operation Monitoring

The system shall provide software to automatically change the operating parameters, monitoring of alarm limits, and start-stop schedules for each mechanical system from summer to winter and vice-versa. The software shall provide automatic commands to applications programs to coordinate proper summer or winter operation. Change over setpoints shall be operator selectable and settable.

2.15.8 Control Sequences and Control Loops

Sufficient memory shall be provided to implement the requirements specified and shown for each DDC. Specific functions to be implemented are defined in individual system control sequences and database tables shown in the drawings, and shall include, as applicable, the following:

a. PI Control: This function shall provide proportional control and proportional plus integral control.

b. Two Position Control: This function shall provide control for a two state device by comparing a set point against a process variable and an established deadband.

c. Floating Point Control: This function shall exercise control when an error signal exceeds a selected deadband, and shall maintain control

until the error is within the deadband limits.

d. Signal Selection: This function shall allow the selection of the highest or lowest analog value from a group of analog values as the basis of control. The function shall include the ability to cascade analog values so that large numbers of inputs can be reduced to one or two outputs.

e. Signal Averaging: This function shall allow the mathematical calculation of the average analog value from a group of analog values as the basis of control. The function shall include the ability to "weight" the individual analog values so that the function output can be biased as necessary to achieve proper control.

f. Reset Function: This function shall develop an AO based on up to two AIs and one operator specified reset schedule.

g. Cooling/Heating Operation Program: Software shall be provided to change, either automatically or on operator command, the operating parameters, monitoring of alarm limits, and start-stop schedules for each mechanical system where such a change from cooling to heating and vice versa is meaningful. The software shall provide commands to application programs to coordinate cooling or heating mode operation. Software shall automatically switch facilities from cooling to heating, and vice versa, based on schedules or temperatures. All HVAC equipment and systems shall be assigned to the program.

2.15.9 Command Priorities

A scheme of priority levels shall be provided to prevent interaction of a command of low priority with a command of higher priority. The system shall require the latest highest priority command addressed to a single point to be stored for a period of time longer than the longest time constraint in the on and off states, insuring that the correct command shall be issued when the time constraint is no longer in effect or report the rejected command. Override commands entered by the operator shall have higher priority than those emanating from applications programs.

2.15.10 Resident Application Software

The Contractor shall provide resident applications programs to achieve the sequences of operation, parameters, constraints, and interlocks necessary to provide control of the systems connected to the DDC system. Application programs shall be resident and shall execute in the DDC, and shall coordinate with each other, to insure that no conflicts or contentions remain unresolved. The Contractor shall coordinate the application programs specified with the equipment and controls operation, and other specified requirements. A scheme of priority levels shall be provided to prevent interaction of a command of low priority with a command of higher priority. The system shall require the latest highest priority command addressed to a single point to be stored for a period of time longer than the longest time constraint in the ON and OFF states, insuring that the correct command shall be issued when the time constraint is no longer in effect or the rejected command shall be reported. Override commands entered by the operator shall have higher priority than those emanating from application programs.

2.15.10.1 Program Inputs and Outputs

The Contractor shall select the appropriate program inputs listed for each

application program to calculate the required program outputs. Where the specific program inputs are not available, a "default" value or virtual point appropriate for the equipment being controlled and the proposed sequence of operation shall be provided to replace the missing input, thus allowing the application program to operate. AIs to application programs shall have an operator adjustable deadband to preclude short cycling or hunting. Program outputs shall be real analog or digital outputs or logic (virtual) points as required to provide the specified functions. The Contractor shall select the appropriate input and output signals to satisfy the requirements for control of systems as shown.

2.15.10.2 DDC General Conditions

The Contractor shall provide software required to achieve the sequences of operation, parameters, constraints, and interlocks shown. Application software shall be resident in the DDC in addition to any other required software. In the event of a DDC failure, the controlled equipment shall continue to function in the failure mode shown.

2.15.10.3 Scheduled Start/Stop Program

This program shall start and stop equipment based on a time of day schedule for each day of the week, and on a holiday schedule. To eliminate power surges, an operator adjustable time delay shall be provided between consecutive start commands.

a. Program Inputs:

(1) Day of week/holiday.

(2) Time of day.

(3) Cooling and heating high-low alarm limits.

(4) Cooling and heating start-stop schedules.

(5) Cooling or heating mode of operation.

(6) Equipment status.

(7) Equipment constraints.

(8) Consecutive start time delay.

b. Program Outputs: Start/stop signal.

2.15.10.4 Optimum Start/Stop Program

This program shall start and stop equipment as specified for the scheduled start/stop program, but shall include a sliding schedule based on indoor and outdoor air conditions. The program shall take into account the thermal characteristics of the structure, and indoor and outdoor air conditions, using prediction software to determine the minimum time of HVAC system operation needed to satisfy space environmental requirements at the start of the occupied cycle, and determine the earliest time for stopping equipment at the day's end without exceeding space environmental requirements. An adaptive control algorithm shall be utilized to automatically adjust the constants used in the program.

a. Program Inputs:

(1) Day of week/holiday.

(2) Time of day.

(3) Cooling or heating mode of operation.

(4) Equipment status.

(5) Cooling and heating building occupancy schedules.

(6) Space temperature.

(7) Building heating constant (operator adjustable and automatically optimized).

(8) Building cooling constant (operator adjustable and automatically optimized).

(9) OA temperature.

(10) Required space temperature at occupancy (heating).

(11) Required space temperature at occupancy (cooling).

(12) Equipment constraints.

(13) Cooling and heating high-low alarm limits.

b. Program Outputs: Start/stop signal.

2.15.10.5 Day-Night Setback Program

The software shall limit the rise or drop of space temperature (or specified fluid temperature) during unoccupied hours. Whenever the space temperature (or specified fluid temperature) is above (or below for heating) the operator assigned temperature limit, the system shall be turned on until the temperature is within the assigned temperature limit.

a. Program Inputs:

(1) Day of week.

(2) Time of day.

(3) Cooling or heating mode of operation.

(4) Cooling and heating occupancy schedules.

(5) Equipment status.

(6) Space temperature (or specified fluid temperature).

(7) Minimum space temperature (or specified fluid temperature) during unoccupied periods.

(8) Maximum space temperature (or specified fluid temperature) during unoccupied periods.

(9) Equipment constraints.

b. Program Outputs: Start/stop signal.

2.15.10.6 Not Used

2.15.10.7 Not Used

2.15.10.8 Not Used

2.15.10.9 Not Used

2.15.10.10 Not Used

2.15.10.11 Not used

2.15.10.12 Air Distribution Unitary Controller Software

Software shall be provided for the management and control of the air distribution terminal units. Software shall allow for operator definition of multiple air distribution terminal units as functional groups which may be treated as a single entity; monitoring, alarming and reporting of terminal unit parameters on an individual or group basis; and remote setpoint adjustment on an individual or group basis.

a. Functions:

(1) Volume control in response to temperature.
(2) Volume flow limits, minimum and maximum.
(3) Occupied and unoccupied operation with associated temperature and volume limits.
(4) Temperature setpoint override.

b. Program Inputs

(1) Space temperature.
(2) Space temperature setpoint.
(3) Space temperature setpoint limits.
(4) Supply airflow volume.
(5) Supply airflow volume high and low limits.

c. Program Outputs

(1) Supply volume control signal.
(2) Auxiliary fan start/stop signal.
(3) Supplemental heat control signal.

2.15.10.13 Not Used

2.15.10.14 Not Used

2.15.10.15 Not Used

2.15.10.16 Not Used

2.15.10.17 Not Used

2.15.10.18 Not Used.

2.15.10.19 Not Used

2.15.10.20 Not Used

2.15.10.21 Not Used.

2.15.10.22 Not Used

2.15.10.23 Not Used

PART 3 EXECUTION

3.1 GENERAL INSTALLATION CRITERIA

3.1.1 HVAC Control System

The HVAC control system shall be completely installed and ready for operation. Dielectric isolation shall be provided where dissimilar metals are used for connection and support. Penetrations through and mounting holes in the building exterior shall be made watertight. The HVAC control system installation shall provide clearance for control system maintenance by maintaining access space between coils, access space to mixed-air plenums, and other access space required to calibrate, remove, repair, or replace control system devices. The control system installation shall not interfere with the clearance requirements for mechanical and electrical system maintenance.

3.1.2 Software Installation

Software shall be loaded for an operational system, including databases for all points, operational parameters, and system, command, and application software. The Contractor shall provide original and backup copies of source, excluding the general purpose operating systems and utility programs furnished by computer manufacturers and the non-job-specific proprietary code furnished by the system manufacturer, and object modules for software on each type of media utilized, within 30 days of formal Government acceptance. In addition, a copy of individual floppy disks of software for each DDC panel shall be provided.

3.1.3 Device Mounting Criteria

Devices mounted in or on piping or ductwork, on building surfaces, in mechanical/electrical spaces, or in occupied space ceilings shall be installed in accordance with manufacturer's recommendations and as shown. Control devices to be installed in piping and ductwork shall be provided with required gaskets, flanges, thermal compounds, insulation, piping, fittings, and manual valves for shutoff, equalization, purging, and calibration. Strap-on temperature sensing elements shall not be used except as specified.

3.1.4 Wiring Criteria

Wiring external to control panels, including low-voltage wiring, shall be installed in metallic raceways. Nonmetallic-sheathed cables or metallic-armored cables may be installed in areas permitted by NFPA 70

Wiring shall be installed without splices between control devices and DDC panels. Instrumentation grounding shall be installed as necessary to prevent ground loops, noise, and surges from adversely affecting operation of the system. Ground rods installed by the contractor shall be tested as specified in IEEE Std 142. Cables and conductor wires shall be tagged at both ends, with the identifier shown on the shop drawings. Electrical work shall be as specified in Section 16415 ELECTRICAL WORK, INTERIOR and as shown.

3.2 CONTROL SYSTEM INSTALLATION

3.2.1 Damper Actuators

Actuators shall not be mounted in the air stream. Multiple actuators operating a common damper shall be connected to a common drive shaft. Actuators shall be installed so that their action shall seal the damper to the extent required to maintain leakage at or below the specified rate and shall move the blades smoothly.

3.2.2 Local Gauges for Actuators

Pneumatic actuators shall have an accessible and visible receiver gauge installed in the tubing lines at the actuator as shown.

3.2.3 Room Instrument Mounting

Room instruments shall be mounted so that their sensing elements are 5 feet above the finished floor unless otherwise shown. Temperature setpoint device shall be recess mounted.

3.2.4 Freezestats

For each 20 square feet of coil face area, or fraction thereof, a freezestat shall be provided to sense the temperature at the location shown. Manual reset freezestats shall be installed in approved, accessible locations where they can be reset easily. The freezestat sensing element shall be installed in a serpentine pattern.

3.2.5 Averaging Temperature Sensing Elements

Sensing elements shall have a total element minimum length equal to 1 linear foot per square foot of duct cross-sectional area.

3.2.6 Foundations and Housekeeping Pads

Foundations and housekeeping pads shall be provided for the HVAC control system air compressors.

3.2.7 Not Used

3.2.8 Duct Static Pressure Sensing Elements and Transmitters

The duct static pressure sensing element and transmitter sensing point shall be located at 75% to 100% of the distance between the first and last air terminal units.

3.2.9 Indication Devices Installed in Piping and Liquid Systems

Gauges in piping systems subject to pulsation shall have snubbers. Gauges

for steam service shall have pigtail fittings with cock. Thermometers and temperature sensing elements installed in liquid systems shall be installed in thermowells.

3.2.10 Not Used.3.2.10.1 3.2.10.2 3.2.10.3 3.2.10.4 3.2.10.5 3.2.10.6 3.2.10.7

3.3 CONTROL SEQUENCES OF OPERATION

3.3.1 General Requirements - HVAC Systems

These requirements shall apply to all primary HVAC systems unless modified herein. The sequences describe the actions of the control system for one direction of change in the HVAC process analog variable, such as temperature, humidity or pressure. The reverse sequence shall occur when the direction of change is reversed.

3.3.1.1 Supply Fan Operating

HVAC system outside air, return air, and relief air dampers shall function as described for specific modes of operation unless control of the dampers is assumed by the fire and smoke control system. Smoke dampers shall open before fans are allowed to start. Interlocked exhaust fans shall be stopped in the unoccupied and ventilation delay modes and their dampers shall be closed. Interlocked exhaust fans shall run in the occupied mode, and their dampers shall open. Cooling coil control valves and cooling coil circulating pumps shall function as described for the specific modes of operation [unless their control is assumed by the freeze protection system.] Heating coil valves shall be under control.

3.3.1.2 Supply Fan Not Operating

When an HVAC system is stopped, all interlocked fans shall stop, the smoke dampers shall close, the outside air and relief air dampers shall close, the return air damper shall open, all stages of direct-expansion cooling shall stop, the system shall pump down if it has a pump down cycle, humidification shall stop, and cooling coil valves for coils located indoors shall close to the coil. Cooling coil valves of units located outdoors shall open to the coil. Heating coil valves shall remain under control.

3.3.1.3 Hydronic Heating - Distribution Pump Operating

Hydronic heat-exchanger valves shall be under control.

3.3.1.4 Hydronic Heating - Distribution Pump Not Operating

Hydronic heat-exchanger valves shall close.

3.3.2 Not Used

3.3.3 Unit Heater and Cabinet Unit Heater

All Modes - A wall-mounted thermostat with an "AUTO-OFF" switch located as shown, shall cycle the fan to maintain its setpoint as shown when the switch is in the "AUTO" position. When the switch is in the "OFF" position, the fan shall be stopped.

3.3.4 Not Used

3.3.5 All-Air Small Package Unitary System

A microprocessor-based room thermostat, located as shown, with "HEAT-OFF-COOL" and "AUTO-ON" switches shall control the system. Heating Mode - Cooling unit shall be off, and heating shall be active. The thermostat shall operate the condensing unit and system fan to maintain the day and night setpoints as shown. Programmed occupied times shall be considered "day" and programmed unoccupied times shall be considered "night." Cooling Mode - Heating unit shall be off. During the day the thermostat shall operate the condensing units and system fan to maintain the setpoint. The condensing unit shall be off at night. Off Mode - The system shall be off. On Mode - The system fan shall run continuously. Auto Mode - The system fan shall operate whenever heating or cooling is required.

3.3.6 Dual Temperature Fan-Coil Unit

All Modes - A wall-mounted thermostat, located as shown, shall cycle the fan to maintain the setpoint as shown. When the fan is on, a 3-way valve shall open to the coil. When the fan is off, the 3-way valve shall bypass the coil. An aquastat shall switch the wall-mounted thermostat action from heating mode to cooling mode whenever the hydronic dual-temperature medium is below the setpoint.

3.3.7 Not Used

3.3.8 Not Used.3.3.8.1 3.3.8.2 Not Used3.3.8.3 Not Used

3.3.9 Not Used

3.3.10 Not Used

3.3.11 Not Used

3.3.12 Not Used

3.3.13 Not Used

3.3.14 Not Used

3.3.15 Not Used

3.3.16 Not Used

3.3.17 Not Used

3.3.18 Variable Air Volume Control Sequence with Return Fan

3.3.18.1 Occupied, Unoccupied, and Ventilation Delay Modes of Operation

Ventilation delay mode timing shall start prior to the occupied mode timing. During ventilation delay mode, the dampers shall remain in their normal positions as shown, except when under economizer control. At the time shown, the DDC system shall place the system in the occupied mode. At the expiration of the ventilation delay mode timing period, the DDC system shall place the minimum outside air damper under minimum outside air flow

control and shall place the economizer outside air, return air, and relief air dampers under economizer and mixed air temperature control. At the time shown, the DDC system shall place the control system in the unoccupied mode of operation and dampers shall return to their normal positions as shown.

3.3.18.2 Fan Control

a. Occupied and Ventilation Delay Modes - Supply fan and return fan shall operate continuously.

b. Unoccupied Mode - The supply fan and the return fan shall cycle according to the night setback schedule. The fans shall start and stop at the setpoints as shown.

3.3.18.3 Supply Duct Pressurization Control

When the supply fan starts, the DDC system shall modulate the inlet vanes from the signal of a static pressure sensing element and transmitter to maintain the setpoint as shown. A high limit static pressure switch in the fan discharge shall stop the supply fan and the return fan and initiate a high static alarm when the static pressure exceeds the setpoint. When the fans are off, the inlet vanes shall be closed.

3.3.18.4 Return Fan Volume Control

When the return fan starts, the DDC system shall modulate the return fan inlet vanes from the signals of an air flow measurement station and transmitter in the return air ductwork, in combination with an air flow measurement station and transmitter in the supply air ductwork, to maintain a constant difference between supply air and return air flow rates as shown.

3.3.18.5 Filters

A differential pressure switch across each filter shall initiate a filter alarm when the pressure drop across the filter reaches the setpoint as shown.

3.3.18.6 Freeze Protection

A freezestat, located as shown, shall stop the supply and return fans, cause the outside air, return air, and relief air dampers to return to their normal position, and shall initiate a low temperature alarm if the temperature drops below the freezestat's setpoint as shown. The DDC system shall monitor the freezestat through auxiliary contacts and shall indicate an alarm condition when the freezestat trips.

3.3.18.7 Cooling Coil Control

a. Occupied and Ventilation Delay Modes - The cooling coil control valve shall be modulated by the DDC system from the signal of a temperature sensing element and transmitter located in the coil discharge air to maintain the setpoint as shown.

b. Unoccupied Mode - The cooling coil control valve shall remain closed.

3.3.18.8 Minimum Outside Air Flow Control

a. Occupied Mode - The minimum outside air damper shall be modulated to maintain the minimum outside air flow at setpoint, as sensed by an air flow measurement station located in the minimum outside air duct.

b. Unoccupied and Ventilation Delay Modes - The minimum outside air damper shall remain closed.

3.3.18.9 Economizer and Mixed Air Temperature Control

The DDC system shall accept the signal of an outside air temperature sensing element and transmitter and the signal of a return air temperature sensing element and transmitter. When the return air temperature is above the economizer setpoint, and the outside air temperature is sufficiently below the return air temperature to be effective for cooling, the DDC system shall place the AHU in the economizer mode by modulating the economizer outside air, relief air, and the return air dampers to maintain the mixed air temperature at setpoint. As the economizer outside air and relief air dampers open, the return air damper closes. When the system is not in economizer mode, the economizer outside air and relief air dampers shall remain closed and the return air damper shall remain open.

3.3.18.10 Not Used.

3.3.18.11 Not Used

3.3.18.12 Emergency Fan Shutdown

All Modes - Smoke detectors in the supply air and return air ductwork shall stop the supply fan and the return fan and initiate a smoke alarm if smoke is detected at either location. Restarting the supply fan and the return fan shall require manual reset at the smoke detector.

3.3.19 Not Used

3.3.20 Not Used

3.3.21 Not Used

3.3.22 Not Used

3.4 COMMISSIONING PROCEDURES

3.4.1 Evaluations

The Contractor shall make the observations, adjustments, calibrations, measurements, and tests of the control systems, set the time schedule, and make any necessary control system corrections to ensure that the systems function as described in the sequence of operation.

3.4.1.1 Item Check

Signal levels shall be recorded for the extreme positions of each controlled device. An item-by-item check of the sequence of operation requirements shall be performed using Steps 1 through 4 in the specified control system commissioning procedures. Steps 1, 2, and 3 shall be performed with the HVAC system shut down; Step 4 shall be performed after the HVAC systems have been started. External input signals to the DDC system (such as starter auxiliary contacts, and external systems) may be

simulated in steps 1, 2, and 3. With each operational mode signal change, DDC system output relay contacts shall be observed to ensure that they function.

3.4.1.2 Weather Dependent Test Procedures

Weather dependent test procedures that cannot be performed by simulation shall be performed in the appropriate climatic season. When simulation is used, the actual results shall be verified in the appropriate season.

3.4.1.3 Two-Point Accuracy Check

A two-point accuracy check of the calibration of each HVAC control system sensing element and transmitter shall be performed by comparing the DDC system readout to the actual value of the variable measured at the sensing element and transmitter or airflow measurement station location. Digital indicating test instruments shall be used, such as digital thermometers, motor-driven psychrometers, and tachometers. The test instruments shall be at least twice as accurate as the specified sensing element-to-DDC system readout accuracy. The calibration of the test instruments shall be traceable to National Institute Of Standards And Technology standards. The first check point shall be with the HVAC system in the shutdown condition, and the second check point shall be with the HVAC system in an operational condition. Calibration checks shall verify that the sensing element-to-DDC system readout accuracies at two points are within the specified product accuracy tolerances. If not, the device shall be recalibrated or replaced and the calibration check repeated.

3.4.1.4 Insertion and Immersion Temperatures

Insertion temperature and immersion temperature sensing elements and transmitter-to-DDC system readout calibration accuracy shall be checked at one physical location along the axis of the sensing element.

3.4.1.5 Averaging Temperature

Averaging temperature sensing element and transmitter-to-DDC system readout calibration accuracy shall be checked every 2 feet along the axis of the sensing element in the proximity of the sensing element, for a maximum of 10 readings. These readings shall then be averaged.

3.4.2 Not Used

3.4.3 Unit Heater and Cabinet Unit Heater

The "OFF/AUTO" switch shall be placed in the "OFF" position. Each space thermostat temperature setting shall be turned up so that it makes contact to turn on the unit heater fans. The unit heater fans shall not start. The "OFF/AUTO" switch shall be placed in the "AUTO" position. It shall be ensured that the unit heater fans start. Each space thermostat temperature setting shall be turned down, and the unit heater fans shall stop. The thermostats shall be set at their temperature setpoints. The results of testing of one of each type of unit shall be logged.

3.4.4 Not Used

3.4.5 All-Air Small Packaged Unitary

The schedules shall be manually entered for day temperature and night

temperature setpoints as shown. The fan "AUTO/ON" switch shall be set to "ON." The time shall be manually entered as "DAY." The "HEATING/COOLING" switch shall be set to "HEATING" and it shall be ensured that cooling is off. The temperature setpoint shall be raised and it shall be ensured that heating starts. The "HEATING/COOLING" switch shall be set to "COOLING" and it shall be ensured that heat is off. The temperature setpoint shall be lowered and it shall be ensured that cooling starts. The fan "AUTO/ON" switch shall be set to "AUTO" and the foregoing procedure repeated. The fan shall start and stop automatically with the starting and stopping of heating and cooling. The time shall be manually entered as "NIGHT." The foregoing procedures shall be repeated. When the system is verified as operational, the correct "DAY" and "NIGHT" temperature settings shall be restored and the correct time restored. The power to the thermostat shall be shut off and it shall be verified that the thermostat clock keeps time. The results of testing of one of each type of unit shall be logged.

3.4.6 Fan Coil Unit

The dual-temperature hydronic system shall be set to heating. Each space thermostat temperature setting shall be turned up so that it makes contact and turns the fan coil unit on. It shall be ensured that the fan coil unit fan starts and the valves open to flow through the coils. Each space thermostat temperature setting shall be turned down and it shall be ensured that the fan coil unit fans stop. It shall be ensured that the valves close to flow through the coils. The dual-temperature hydronic system shall be switched to cooling. Each space thermostat temperature setting shall be turned up and it shall be ensured that contact is broken and the fan coil unit fans stop. It shall be ensured that the valves close to flow through the coil. Each space thermostat temperature setting shall be turned down. It shall be ensured that the fan coil unit fans start and the valves open to flow through the coils. The thermostats shall be set at their temperature setpoints. The results of testing of one of each type of unit shall be logged.

3.4.7 Not Used

3.4.8 Not Used.

3.4.9 Not Used

3.4.10 Not Used

3.4.11 Not Used

3.4.12 Not Used

3.4.13 Not Used

3.4.14 Not Used

3.4.15 Not Used

3.4.16 Not Used

3.4.17 Not Used

3.4.18 Variable Air Volume Control System - With Return Fan

Steps for installation shall be as follows:

a. Step 1 - System Inspection: The HVAC system shall be observed in its shutdown condition. It shall be verified that power and main air are available where required, and that the outside air and relief air dampers are closed, the return air damper is open, and that the supply fan and return/relief fan inlet vanes and cooling coil valve are closed.

b. Step 2 - Calibration Accuracy Check with HVAC System Shutdown: Readings shall be taken with a digital thermometer at each temperature sensing element location. Each temperature shall be read at the DDC controller, and the thermometer and DDC system display readings logged. The calibration accuracy of the sensing element-to-DDC system readout for outside air, return air, mixed air, and cooling coil discharge temperatures shall be checked. The minimum outside air flow, supply air flow, and return air flow shall be read, using a digital indicating velometer, and the velometer and DDC system display readings logged. The flows should read zero.

c. Step 3 - Actuator Range Adjustments: A signal shall be applied to the actuators through an operator entered value at the DDC system. The proper operation of the actuators and positioners for all dampers and valves shall be visually verified. The signal shall be varied from live zero to full range, and actuator travel shall be verified from zero stroke to full stroke within the signal range. It shall be verified that all sequenced and parallel operated actuators move from zero stroke to full stroke in the proper direction, and move the connected device in the proper direction from one extreme position to the other.

d. Step 4 - Control System Commissioning:

(1) With the fans ready to start, the control system shall be placed in the ventilation delay mode and in the occupied mode, and it shall be verified that supply fan and return fan start.

(3) With supply fan running, a high static pressure input signal shall be simulated at the device by a pressure input to the sensing device. HVAC system shutdown shall be observed, and it shall be verified that the high static alarm is initiated. The HVAC system shall be restarted by manual reset, and it shall be verified that the high static alarm returns to normal.

(4) The two-point accuracy check of sensing element-to-DDC system readout for the static pressure in the supply duct shall be performed.

3.4.19 Not Used

3.4.20 Single Zone with Dual Temperature Coil; No Return Fan

Steps for installation shall be as follows:

a. Step 1 - System Inspection: The HVAC system shall be verified in its shutdown condition. The system shall be checked to see that power and main air are available where required, the outside air damper, relief air damper, and cooling coil valve are closed, and that the return air damper

is open.

b. Step 2 - Calibration Accuracy Check with HVAC System Shutdown: Readings shall be taken with a digital thermometer at each temperature sensing element location. Each temperature shall be read at the DDC controller, and the thermometer and DDC system display readings logged. The calibration accuracy of the sensing element-to-DDC system readout shall be checked for outside air, return air, and space temperatures.

c. Step 3 - Actuator Range Adjustments: A signal shall be applied to the actuator through an operator entered value to the DDC system. The proper operation of the actuators and positioners for all dampers and valves shall be visually verified. The signal shall be varied from live zero to full range, and it shall be verified that the actuators travel from zero stroke to full stroke within the signal range. It shall be verified that all sequenced and parallel operated actuators move from zero stroke to full stroke in the proper direction and move the connected device in the proper direction from one extreme position to the other.

(4) Dual-temperature hydronic changeover operation of aquastat shall be simulated. Control system selection of opposite season space temperature control shall be verified by artificially changing the dual-temperature hydronic temperature.

(5) The control system shall be placed in the unoccupied mode, and it shall be verified that the HVAC system shuts down, and the control system assumes the specified shutdown conditions. The space temperature shall be artificially changed to below the night setback temperature setpoint, and it shall be verified that the HVAC system starts; the space temperature shall be artificially changed to above the night setback temperature setpoint and it shall be verified that the HVAC system stops. The night setback temperature setpoint shall be set at the setting as shown.

3.4.21 Not Used

3.4.22 Not Used

3.5 BALANCING, COMMISSIONING, AND TESTING

3.5.1 Coordination with HVAC System Balancing

Commissioning of the control system, except for tuning of controllers, shall be performed prior to or simultaneous with HVAC system balancing. The contractor shall tune the HVAC control system after all air system and hydronic system balancing has been completed, minimum damper positions set and a report has been issued.

3.5.2 Control System Calibration, Adjustments, and Commissioning

Control system commissioning shall be performed for each HVAC system, using test plans and procedures previously approved by the Government. The Contractor shall provide all personnel, equipment, instrumentation, and supplies necessary to perform commissioning and testing of the HVAC control system. All instrumentation and controls shall be calibrated and the specified accuracy shall be verified using test equipment with calibration traceable to NIST standards. Wiring shall be tested for continuity and for ground, open, and short circuits. Tubing systems shall be tested for leaks. Mechanical control devices shall be adjusted to operate as specified. HVAC control panels shall be pretested off-site as a functioning assembly ready for field connections, calibration, adjustment,

and commissioning of the operational HVAC control system. Control parameters and logic (virtual) points including control loop setpoints, gain constants, and integral constraints, shall be adjusted before the system is placed on line. Communications requirements shall be as indicated. Written notification of any planned commissioning or testing of the HVAC Control systems shall be given to the Government at least 14 calendar days in advance.

3.5.3 Performance Verification Test

The Contractor shall demonstrate compliance of the HVAC control system with the contract documents. Using test plans and procedures previously approved by the Government, the Contractor shall demonstrate all physical and functional requirements of the project. The performance verification test shall show, step-by-step, the actions and results demonstrating that the control systems perform in accordance with the sequences of operation. The performance verification test shall not be started until after receipt by the Contractor of written permission by the Government, based on Government approval of the Commissioning Report and completion of balancing. The tests shall not be conducted during scheduled seasonal off periods of base heating and cooling systems.

3.5.4 Endurance Test

The endurance test shall be used to demonstrate the specified overall system reliability requirement of the completed system. The endurance test shall not be started until the Government notifies the Contractor in writing that the performance verification test is satisfactorily completed. The Government may terminate the testing at any time when the system fails to perform as specified. Upon termination of testing by the Government or by the Contractor, the Contractor shall commence an assessment period as described for Phase II. Upon successful completion of the endurance test, the Contractor shall deliver test reports and other documentation as specified to the Government prior to acceptance of the system.

a. Phase I (Testing). The test shall be conducted 24 hours per day, 7 days per week, for 15 consecutive calendar days, including holidays, and the system shall operate as specified. The Contractor shall make no repairs during this phase of testing unless authorized by the Government in writing.

b. Phase II (Assessment). After the conclusion of Phase I, the Contractor shall identify failures, determine causes of failures, repair failures, and deliver a written report to the Government. The report shall explain in detail the nature of each failure, corrective action taken, results of tests performed, and shall recommend the point at which testing should be resumed. After delivering the written report, the Contractor shall convene a test review meeting at the jobsite to present the results and recommendations to the Government. As a part of this test review meeting, the Contractor shall demonstrate that all failures have been corrected by performing appropriate portions of the performance verification test. Based on the Contractor's report and test review meeting, the Government may require that the Phase I test be totally or partially rerun. After the conclusion of any retesting which the Government may require, the Phase II assessment shall be repeated as if Phase I had just been completed.

3.5.5 Posted and Panel Instructions

Posted and Panel Instructions, showing the final installed conditions, shall be provided for each system. The posted instructions shall consist of laminated half-size drawings and shall include the control system schematic, equipment schedule, sequence of operation, wiring diagram, communication network diagram, and valve and damper schedules. The posted instructions shall be permanently affixed, by mechanical means, to a wall near the control panel. Panel instructions shall consist of laminated letter-size sheets and shall include a Routine Maintenance Checklist and as-built configuration check sheets. Panel instructions and one copy of the Operation and Maintenance Manuals, previously described herein, shall be placed inside each control panel or permanently affixed, by mechanical means, to a wall near the panel.

3.6 TRAINING

3.6.1 Training Course Requirements

A training course shall be conducted for 4 operating staff members designated by the Contracting Officer in the maintenance and operation of the system, including specified hardware and software. The training period, for a total of 32 hours of normal working time, shall be conducted within 30 days after successful completion of the performance verification test. The training course shall be conducted at the project site. Audiovisual equipment and 6 sets of all other training materials and supplies shall be provided. A training day is defined as 8 hours of classroom instruction, including two 15 minute breaks and excluding lunchtime, Monday through Friday, during the daytime shift in effect at the training facility.

3.6.2 Training Course Content

For guidance in planning the required instruction, the Contractor shall assume that attendees will have a high school education or equivalent, and are familiar with HVAC systems. The training course shall cover all of the material contained in the Operating and Maintenance Instructions, the layout and location of each HVAC control panel, the layout of one of each type of unitary equipment and the locations of each, the location of each control device external to the panels, the location of the compressed air station, preventive maintenance, troubleshooting, diagnostics, calibration, adjustment, commissioning, tuning, and repair procedures. Typical systems and similar systems may be treated as a group, with instruction on the physical layout of one such system. The results of the performance verification test and the calibration, adjustment and commissioning report shall be presented as benchmarks of HVAC control system performance by which to measure operation and maintenance effectiveness.

---end of section

SECTION TABLE OF CONTENTS

DIVISION 15 - MECHANICAL

SECTION 15990

TESTING, ADJUSTING, AND BALANCING OF HVAC SYSTEMS

08/97

PART 1 GENERAL

1.1 REFERENCES
1.2 SUBMITTALS
1.3 SIMILAR TERMS
1.4 TAB STANDARD
1.5 QUALIFICATIONS
1.5.1 TAB Firm
1.5.2 TAB Specialist
1.6 TAB SPECIALIST RESPONSIBILITIES

PART 2 PRODUCTS (Not Applicable)

PART 3 EXECUTION

3.1 DESIGN REVIEW
3.2 TAB RELATED HVAC SUBMITTALS
3.3 TAB SCHEMATIC DRAWINGS AND REPORT FORMS
3.4 DUCTWORK LEAK TESTING
3.5 TESTING, ADJUSTING, AND BALANCING
3.5.1 TAB Procedures
3.5.2 Systems Readiness Check
3.5.3 Preparation of TAB Report
3.5.4 TAB Verification
3.5.5 Marking of Setting
3.5.6 Identification of Test Ports

-- End of Section Table of Contents --

SECTION 15990

TESTING, ADJUSTING, AND BALANCING OF HVAC SYSTEMS
08/97

PART 1 GENERAL

1.1 REFERENCES

The publications listed below form a part of this specification to the extent referenced. The publications are referred to in the text by basic designation only.

ASSOCIATED AIR BALANCE COUNCIL (AABC)

AABC MN-1	(1989) National Standards for Testing and Balancing Heating, Ventilating, and Air Conditioning Systems

NATIONAL ENVIRONMENTAL BALANCING BUREAU (NEBB)

NEBB Procedural Stds	(1991) Procedural Standards for Testing Adjusting Balancing of Environmental Systems

1.2 SUBMITTALS

Government approval is required for submittals with a "GA" designation; submittals having a "FIO" designation are for information only. The following shall be submitted in accordance with Section 01330 SUBMITTAL PROCEDURES:

SD-01 Data

TAB Related HVAC Submittals; FIO.

A list of the TAB Related HVAC Submittals, no later than 7 days after the approval of the TAB Specialist.

SD-04 Drawings

TAB Schematic Drawings and Report Forms; GA1.

Three copies of the TAB Schematic Drawings and Report Forms, no later than 21 days prior to the start of TAB field measurements.

SD-06 Instructions

TAB Procedures; GA1.

Proposed procedures for TAB, submitted with the TAB Schematic Drawings and Report Forms.

SD-07 Schedules

Systems Readiness Check; FIO.

Proposed date and time to begin the Systems Readiness Check, no later than 7 days prior to the start of the Systems Readiness Check.

TAB Execution; GA1.

Proposed date and time to begin field measurements, making adjustments, etc., for the TAB Report, submitted with the Systems Readiness Check Report.

TAB Verification; GA1.

Proposed date and time to begin the TAB Verification, submitted with the TAB Report.

SD-08 Statements

TAB Firm; GA1.

Certification of the proposed TAB Firm's qualifications by either AABC or NEBB to perform the duties specified herein and in other related Sections, no later than 21 days after the Notice to Proceed. The documentation shall include the date that the Certification was initially granted and the date that the current Certification expires. Any lapses in Certification of the proposed TAB Firm or disciplinary action taken by AABC or NEBB against the proposed TAB Firm shall be described in detail.

TAB Specialist; GA1.

Certification of the proposed TAB Specialist's qualifications by either AABC or NEBB to perform the duties specified herein and in other related Sections, no later than 21 days after the Notice to Proceed. The documentation shall include the date that the Certification was initially granted and the date that the current Certification expires. Any lapses in Certification of the proposed TAB Specialist or disciplinary action taken by AABC or NEBB against the proposed TAB Specialist shall be described in detail.

Instrument Calibration; FIO.

List of each instrument to be used during TAB, stating calibration requirements required or recommended by both the TAB Standard and the instrument manufacturer and the actual calibration history of the instrument, submitted with the TAB Procedures. The calibration history shall include dates calibrated, the qualifications of the calibration laboratory, and the calibration procedures used.

SD-09 Reports

Design Review Report; GA1.

A copy of the Design Review Report, no later than 14 days after approval of the TAB Firm and the TAB Specialist.

Systems Readiness Check Report; GA1.

A copy of completed checklists for each system, each signed by the TAB Specialist, at least 7 days prior to the start of TAB Execution. All items in the Systems Readiness Check Report shall be signed by the TAB Specialist and shall bear the seal of the Professional Society or National Association

used as the TAB Standard.

TAB Report; GA1.

Three copies of the completed TAB Reports, no later that 7 days after the execution of TAB. All items in the TAB Report shall be signed by the TAB Specialist and shall bear the seal of the Professional Society or National Association used as the TAB Standard.

TAB Verification Report; GA1.

Three copies of the completed TAB Verification Report, no later that 7 days after the execution of TAB Verification. All items in the TAB Verification Report shall be signed by the TAB Specialist and shall bear the seal of the Professional Society or National Association used as the TAB Standard.

SD-13 Certificates

Ductwork Leak Testing; FIO.

A written statement signed by the TAB Specialist certifying that the TAB Specialist witnessed the Ductwork Leak Testing, it was successfully completed, and that there are no known deficiencies related to the ductwork installation that will prevent TAB from producing satisfactory results.

1.3 SIMILAR TERMS

In some instances, terminology differs between the Contract and the TAB Standard primarily because the intent of this Section is to use the industry standards specified, along with additional requirements listed herein to produce optimal results. The following table of similar terms is provided for clarification only. Contract requirements take precedent over the corresponding AABC or NEBB requirements where differences exist.

SIMILAR TERMS

Contract Term	AABC Term	NEBB Term
TAB Standard	National Standards for Testing and Balancing Heating, Ventilating, and Air Conditioning Systems	Procedural Standards for Testing Adjusting Balancing of Environmental Systems.
TAB Specialist	TAB Engineer	TAB Supervisor
Systems Readiness Check	Construction Phase Inspection	Field Readiness Check & Preliminary Field Procedures.

1.4 TAB STANDARD

TAB shall be performed in accordance with the requirements of the standard under which the TAB Firm's qualifications are approved, i.e., AABC MN-1or NEBB Procedural Stds, unless otherwise specified herein. All recommendations and suggested practices contained in the TAB Standard shall be considered mandatory. The provisions of the TAB Standard, including checklists, report forms, etc., shall, as nearly as practical, be used to

satisfy the Contract requirements. The TAB Standard shall be used for all aspects of TAB, including qualifications for the TAB Firm and Specialist and calibration of TAB instruments. Where the instrument manufacturer calibration recommendations are more stringent than those listed in the TAB Standard, the manufacturer's recommendations shall be adhered to. All quality assurance provisions of the TAB Standard such as performance guarantees shall be part of this contract. For systems or system components not covered in the TAB Standard, TAB procedures shall be developed by the TAB Specialist. Where new procedures, requirements, etc., applicable to the Contract requirements have been published or adopted by the body responsible for the TAB Standard used (AABC or NEBB), the requirements and recommendations contained in these procedures and requirements shall be considered mandatory.

1.5 QUALIFICATIONS

1.5.1 TAB Firm

The TAB Firm shall be either a member of AABC or certified by the NEBB and certified in all categories and functions where measurements or performance are specified on the plans and specifications, including building systems commissioning. The certification shall be maintained for the entire duration of duties specified herein. If, for any reason, the firm loses subject certification during this period, the Contractor shall immediately notify the Contracting Officer and submit another TAB Firm for approval. Any firm that has been the subject of disciplinary action by either the AABC or the NEBB within the five years preceding Contract Award shall not be eligible to perform any duties related to the HVAC systems, including TAB. All work specified in this Section and in other related Sections to be performed by the TAB Firm shall be considered invalid if the TAB Firm loses its certification prior to Contract completion and must be performed by an approved successor. These TAB services are to assist the prime Contractor in performing the quality oversight for which it is responsible. The TAB Firm shall be a subcontractor of the prime Contractor, and shall report to and be paid by the prime Contractor.

1.5.2 TAB Specialist

The TAB Specialist shall be either a member of AABC or an experienced technician of the Firm certified by the NEBB. The certification shall be maintained for the entire duration of duties specified herein. If, for any reason, the Specialist loses subject certification during this period, the Contractor shall immediately notify the Contracting Officer and submit another TAB Specialist for approval. Any individual that has been the subject of disciplinary action by either the AABC or the NEBB within the five years preceding Contract Award shall not be eligible to perform any duties related to the HVAC systems, including TAB. All work specified in this Section and in other related Sections performed by the TAB Specialist shall be considered invalid if the TAB Specialist loses its certification prior to Contract completion and must be performed by the approved successor.

1.6 TAB SPECIALIST RESPONSIBILITIES

All TAB work specified herein and in related sections shall be performed under the direct guidance of the TAB Specialist. The TAB Specialist shall participate in the commissioning process specified in Section 15995 COMMISSIONING OF HVAC SYSTEMS.

PART 2 PRODUCTS (Not Applicable)

PART 3 EXECUTION

3.1 DESIGN REVIEW

The TAB Specialist shall review the Contract Plans and Specifications and advise the Contracting Officer of any deficiencies that would prevent the HVAC systems from effectively operating in accordance with the sequence of operation specified or prevent the effective and accurate TAB of the system. The TAB Specialist shall provide a Design Review Report individually listing each deficiency and the corresponding proposed corrective action necessary for proper system operation.

3.2 TAB RELATED HVAC SUBMITTALS

The TAB Specialist shall prepare a list of the submittals from the Contract Submittal Register that relate to the successful accomplishment of all HVAC TAB. The submittals identified on this list shall be accompanied by a letter of approval signed and dated by the TAB Specialist when submitted to the Government. The TAB Specialist shall also ensure that the location and details of ports, terminals, connections, etc., necessary to perform TAB are identified on the submittals.

3.3 TAB SCHEMATIC DRAWINGS AND REPORT FORMS

A schematic drawing showing each system component, including balancing devices, shall be provided for each system. Each drawing shall be accompanied by a copy of all report forms required by the TAB Standard used for that system. Where applicable, the acceptable range of operation or appropriate setting for each component shall be included on the forms or as an attachment to the forms. The schematic drawings shall identify all testing points and cross reference these points to the report forms and procedures.

3.4 DUCTWORK LEAK TESTING

The TAB Specialist shall witness the Ductwork Leak Testing specified in Section 15895 AIR SUPPLY, DISTRIBUTION, VENTILATION, AND EXHAUST SYSTEM and approve the results as specified in Paragraph TAB RELATED HVAC SUBMITTALS.

3.5 TESTING, ADJUSTING, AND BALANCING

3.5.1 TAB Procedures

Step by step procedures for each measurement required during TAB Execution shall be provided. The procedures shall be oriented such that there is a separate section for each system. The procedures shall include measures to ensure that each system performs as specified in all operating modes, interactions with other components (such as exhaust fans, kitchen hoods, fume hoods, relief vents, etc.) and systems, and with all seasonal operating differences, diversity, simulated loads, and pressure relationships required.

3.5.2 Systems Readiness Check

The TAB Specialist shall inspect each system to ensure that it is complete, including installation and operation of controls, and that all aspects of the facility that have any bearing on the HVAC systems, including

installation of ceilings, walls, windows, doors, and partitions, are complete to the extent that TAB results will not be affected by any detail or touch-up work remaining. The TAB Specialist shall also verify that all items such as ductwork and piping ports, terminals, connections, etc., necessary to perform TAB shall be complete during the Systems Readiness Check.

3.5.3 Preparation of TAB Report

Preparation of the TAB Report shall begin only when the Systems Readiness Report has been approved. The Report shall be oriented so that there is a separate section for each system. The Report shall include a copy of the appropriate approved Schematic Drawings and TAB Related Submittals, such as pump curves, fan curves, etc., along with the completed report forms for each system. The operating points measured during successful TAB Execution and the theoretical operating points listed in the approved submittals shall be marked on the performance curves and tables. Where possible, adjustments shall be made using an "industry standard" technique which would result in the greatest energy savings, such as adjusting the speed of a fan instead of throttling the flow. Any deficiencies outside of the realm of normal adjustments and balancing during TAB Execution shall be noted along with a description of corrective action performed to bring the measurement into the specified range. If, for any reason, the TAB Specialist determines during TAB Execution that any Contract requirement cannot be met, the TAB Specialist shall immediately provide a written description of the deficiency and the corresponding proposed corrective action necessary for proper system operation to the Contracting Officer.

3.5.4 TAB Verification

The TAB Specialist shall recheck ten percent of the measurements listed in the Tab Report and prepare a TAB Verification Report. The measurements selected for verification and the individuals that witness the verification will be selected by the Contracting Officer's Representative (COR). The measurements will be recorded in the same manner as required for the TAB Report. All measurements that fall outside the acceptable operating range specified shall be accompanied by an explanation as to why the measurement does not correlate with that listed in the TAB Report and a description of corrective action performed to bring the measurement into the specified range. The TAB Specialist shall update the original TAB report to reflect any changes or differences noted in the TAB verification report and submit the updated TAB report. If over 20 percent of the measurements selected by the COR for verification fall outside of the acceptable operating range specified, the COR will select an additional ten percent for verification. If over 20 percent of the total tested (including both test groups) fall outside of the acceptable range, the TAB Report shall be considered invalid and all contract TAB work shall be repeated beginning with the Systems Readiness Check.

3.5.5 Marking of Setting

Following approval of TAB Verification Report, the setting of all HVAC adjustment devices including valves, splitters, and dampers shall be permanently marked by the TAB Specialist so that adjustment can be restored if disturbed at any time.

3.5.6 Identification of Test Ports

The TAB Specialist shall permanently and legibly identify the location

points of duct test ports. If the ductwork has exterior insulation, the identification shall be made on the exterior side of the insulation. All penetrations through ductwork and ductwork insulation shall be sealed to prevent air leakage or to maintain integrity of vapor barrier.

-- End of Section --

SECTION TABLE OF CONTENTS

DIVISION 15 - MECHANICAL

SECTION 15995

COMMISSIONING OF HVAC SYSTEMS

01/93

PART 1 GENERAL

1.1 SUBMITTALS
1.2 SEQUENCING AND SCHEDULING

PART 2 PRODUCTS (Not Applicable)

PART 3 EXECUTION

3.1 COMMISSIONING TEAM AND CHECKLISTS
3.2 TESTS
3.2.1 Pre-Commissioning Checks
3.2.2 Functional Performance Tests

-- End of Section Table of Contents --

SECTION 15995

COMMISSIONING OF HVAC SYSTEMS
01/93

PART 1 GENERAL

1.1 SUBMITTALS

Government approval is required for submittals with a "GA" designation; submittals with "FIO" designation are for information only. The following shall be submitted in accordance with Section 01330 SUBMITTAL PROCEDURES:

SD-01 Data

Commissioning Team; FIO.

List of team members who will represent the Contractor in the pre-commissioning checks and functional performance testing, at least 2 weeks prior to the start of pre-commissioning checks. Proposed revision to the list, prior to the start of the impacted work.

SD-06 Instructions

Test Procedures; FIO.

Detailed procedures for pre-commissioning checks and functional performance tests, at least 4 weeks prior to the start of pre-commissioning checks.

SD-07 Schedules

Test Schedule; GA1.

Schedule for pre-commissioning checks and functional performance tests, at least 2 weeks prior to the start of pre-commissioning checks.

SD-09 Reports

Test Reports; GA1.

Completed pre-commissioning checklists and functional performance test checklists organized by system and by subsystem and submitted as one package. The results of failed tests shall be included along with a description of the corrective action taken.

1.2 SEQUENCING AND SCHEDULING

The work described in this Section shall begin only after all work required in related Sections, including Section 15950 HEATING, VENTILATING, AND AIR CONDITIONING (HVAC) CONTROL SYSTEMS and Section 15990 TESTING, ADJUSTING AND BALANCING OF HVAC SYSTEMS, has been successfully completed, and all test and inspection reports and operation and maintenance manuals required in these Sections have been submitted and approved.

PART 2 PRODUCTS (Not Applicable)

PART 3 EXECUTION

3.1 COMMISSIONING TEAM AND CHECKLISTS

The Contractor shall designate team members to participate in the pre-commissioning checks and the functional performance testing specified herein. In addition, the Government will be represented by a representative of the Contracting Officer, the Design Agent's Representative, and the Using Agency. The team members shall be as follows:

Designation	Function
Q	Contractor's Chief Quality Control Representative
M	Contractor's Mechanical Representative
E	Contractor's Electrical Representative
T	Contractor's Testing, Adjusting, and Balancing Representative
C	Contractor's Controls Representative
D	Design Agent's Representative
O	Contracting Officer's Representative
U	Using Agency's Representative

Each checklist shown in appendices A and B shall be completed by the commissioning team. Acceptance by each commissioning team member of each pre-commissioning checklist item shall be indicated by initials and date unless an "X" is shown indicating that participation by that individual is not required. Acceptance by each commissioning team member of each functional performance test checklist shall be indicated by signature and date.

3.2 TESTS

The pre-commissioning checks and functional performance tests shall be performed in a manner which essentially duplicates the checking, testing, and inspection methods established in the related Sections. Where checking, testing, and inspection methods are not specified in other Sections, methods shall be established which will provide the information required. Testing and verification required by this section shall be performed during the Commissioning phase. Requirements in related Sections are independent from the requirements of this Section and shall not be used to satisfy any of the requirements specified in this Section. The Contractor shall provide all materials, services, and labor required to perform the pre-commissioning checks and functional performance tests. A pre-commissioning check or functional performance test shall be aborted if any system deficiency prevents the successful completion of the test or if any participating non-Government commissioning team member of which participation is specified is not present for the test. The Contractor shall reimburse the Government for all costs associated with effort lost due to tests that are aborted. These costs shall include salary, travel costs and per diem (where applicable) for Government commissioning team members.

3.2.1 Pre-Commissioning Checks

Pre-commissioning checks shall be performed for the items indicated on the checklists in Appendix A. Deficiencies discovered during these checks shall be corrected and retested in accordance with the applicable contract requirements.

3.2.2 Functional Performance Tests

Functional performance tests shall be performed for the items indicated on the checklists in Appendix B. Functional performance tests shall begin only after all pre-commissioning checks have been successfully completed. Tests shall prove all modes of the sequences of operation, and shall verify all other relevant contract requirements. Tests shall begin with equipment or components and shall progress through subsystems to complete systems. Upon failure of any functional performance test checklist item, the Contractor shall correct all deficiencies in accordance with the applicable contract requirements. The checklist shall then be repeated until it has been completed with no errors.

APPENDIX A

PRE-COMMISSIONING CHECKLISTS

Pre-commissioning checklist - Piping

For [_____] Piping System

Checklist Item	Q	M	E	T	C	D	O	U
Installation								
a. Piping complete.	___	___	X	___	X	___	___	___
b. As-built shop drawings submitted.	___	___	X	___	X	___	___	___
c. Piping flushed and cleaned.	___	___	X	___	X	___	___	___
d. Strainers cleaned.	___	___	X	___	X	___	___	___
e. Valves installed as required.	___	___	X	___	X	___	___	___
f. Piping insulated as required.	___	___	X	___	X	___	___	___
g. Thermometers and gauges installed as required.	___	___	X	___	X	___	___	___
h. Verify operation of valves.	___	___	X	___	___	___	___	___
i. Air vents installed as specified.	___	___	X	X	X	___	___	___
j. Flexible connectors installed as specified	__	___	X	X	X	___	___	___
k. Verify that piping has been labeled and valves identified as specified.	___	___	X	___	___	___	___	___
Testing, Adjusting, and Balancing (TAB)								
a. Hydrostatic test complete.	___	___	X	___	X	___	___	___
b. TAB operation complete.	___	___	X	___	___	___	___	___

Pre-commissioning Checklist - Ductwork

For Air Handler: [_____]

Checklist Item	Q	M	E	T	C	D	O	U
Installation								
a. Ductwork complete.	___	___	X	___	X	___	___	___
b. As-built shop drawings submitted.	___	___	X	___	X	___	___	___
c. Ductwork leak test complete.	___	___	X	___	X	___	___	___
d. Fire dampers, smoke dampers, and access doors installed as required with installation of each verified by the specified team members initialing each location on a copy of the as-built drawings.	___	___	X	___	X	___	___	___
e. Ductwork insulated as required.	___	___	X	___	X	___	___	___
f. Thermometers and gauges installed as required.	___	___	___	___	___	___	___	___
g. Verify open/closed status of dampers.	___	___	X	___	X	___	___	___
h. Verify smoke dampers operation.	___	___	X	___	___	___	___	___
i. Flexible connectors installed as specified	__	___	X	___	X	___	___	___
Testing, Adjusting, and Balancing (TAB)								
a. TAB operation complete.	___	___	X	___	X	___	___	___

Pre-commissioning Checklist - DX Air Cooled Condensing Unit

For Condensing Unit: [_____]

Checklist Item	Q	M	E	T	C	D	O	U
Installation	___	___	X	X	X	___	___	___
b. Refrigerant pipe leak tested.	___	___	X	X	X	___	___	___
c. Refrigerant pipe evacuated and charged in accordance with manufacturer's instructions.	___	___	X	X	X	___	___	___
d. Check condenser fans for proper rotation.	___	___	X	___	X	___	___	___
e. Any damage to coil fins has been repaired.	__	___	X	___	X	___	___	___
f. Manufacturer's required maintenance/ operational clearance provided.	___	___	X	X	X	___	___	___
Electrical								
a. Power available to unit disconnect.	___	___	___	X	X	___	___	___
b. Power available to unit control panel.	___	___	___	X	___	___	___	___
c. Verify that power disconnect is located within sight of the unit it controls	___	___	___	X	___	___	___	___
Controls								
a. Unit safety/protection devices tested.	___	___	X	X	___	___	___	___
b. Control system and interlocks installed.	___	___	X	X	___	___	___	___
c. Control system and interlocks operational.	__	___	X	X	___	___	___	___

Pre-commissioning Checklist - Fan Coil Unit

For Fan Coil Unit: [_____]

Checklist Item	Q	M	E	T	C	D	O	U
Installation								
a. Vibration isolation devices installed.	___	___	X	X	X	___	___	___
b. Access doors/removable panels are operable and sealed.	___	___	X	___	X	___	___	___
c. Casing undamaged.	___	___	X	X	X	___	___	___
d. Insulation undamaged.	___	___	X	X	X	___	___	___
e. Condensate drainage is unobstructed.	___	___	X	X	X	___	___	___
f. Fan belt adjusted.	___	___	X	___	X	___	___	___
g. Any damage to coil fins has been repaired.	__	___	X	___	X	___	___	___

Pre-commissioning Checklist - Fan Coil Unit

For Fan Coil Unit: [_____]

Checklist Item	Q	M	E	T	C	D	O	U
h. Manufacturer's required maintenance clearance provided.	___	___	X	X	X	___	___	___
Electrical								
a. Power available to unit disconnect.	___	___	___	X	___	___	___	___
b. Power available to unit control panel.	___	___	___	X	___	___	___	___
c. Proper motor rotation verified.	___	___	___	___	X	___	___	___
d. Verify that power disconnect is located within sight of the unit it controls.	___	___	___	X	___	___	___	___
Coils								
a. Refrigerant piping properly connected.	___	___	X	X	X	___	___	___]
b. Refrigerant piping pressure tested.	___	___	X	X	X	___	___	___]
c. Hot water piping properly connected.	___	___	X	___	___	___	___	___
d. Hot water piping pressure tested.	___	___	X	___	___	___	___	___
Controls								
a. Control valves/actuators properly installed.	___	___	X	___	___	___	___	___
b. Control valves/actuators operable.	___	___	X	X	___	___	___	___
c. Verify proper location and installation of thermostat.	___	___	X	___	___	___	___	___
Testing, Adjusting, and Balancing (TAB)								
a. Construction filters removed and replaced.	__	___	X	___	___	___	___	___
b. TAB results +10%/-0% of cfm shown on drawings								
c. TAB Report submitted.	___	___	X	___	X	___	___	___

Pre-commissioning Checklist - Unit Heater

For Unit Heater: [_____]

Checklist Item	Q	M	E	T	C	D	O	U
Installation								
a. Hot water piping properly connected.	___	___	X	___	___	___	___	___
b. Hot water piping pressure tested.	___	___	X	___	___	___	___	___
c. Air vent installed on hot water coil with shutoff valve as specified.	___	___	X	X	X	___	___	___
d. Any damage to coil fins has been repaired.	__	___	X	___	X	___	___	___
e. Manufacturer's required maintenance/ operational clearance provided.	___	___	X	X	X	___	___	___
Electrical								
a. Power available to unit disconnect.	___	___	___	X	___	___	___	___
b. Proper motor rotation verified.	___	___	___	X	X	___	___	___
c. Verify that power disconnect is located within sight of the unit it controls.	___	___	___	X	___	___	___	___
d. Power available to electric heating coil.	___	___	___	X	___	___	___	___
Controls								
a. Control valves properly installed.	___	___	X	___	___	___	___	___
b. Control valves operable.	___	___	X	X	___	___	___	___
c. Verify proper location and installation of thermostat.	___	___	X	___	___	___	___	___
Testing, Adjusting, and Balancing (TAB)								
a. TAB Report submitted.	___	___	X	___	X	___	___	___

Pre-commissioning Checklist - Exhaust Fan

For Exhaust Fan: [_____]

Checklist Item	Q	M	E	T	C	D	O	U
Installation								
a. Fan belt adjusted.	___	___	X	___	X	___	___	___
Electrical								
a. Power available to fan disconnect.	___	___	___	X	___	___	___	___
b. Proper motor rotation verified.	___	___	___	___	X	___	___	___
c. Verify that power disconnect is located within sight of the unit it controls.	___	___	___	X	___	___	___	___
Controls								
a. Control interlocks properly installed.	___	___	___	X	___	___	___	___
b. Control interlocks operable.	___	___	___	X	___	___	___	___
c. Dampers/actuators properly installed.	___	___	X	___	___	___	___	___
d. Dampers/actuators operable.	___	___	X	___	___	___	___	___
e. Verify proper location and installation of thermostat.	___	___	X	___	___	___	___	___
Testing, Adjusting, and Balancing (TAB)								
a. TAB results +10%/-0% to cfm shown on drawings	___	___	X	___	X	___	___	___
b. TAB Report submitted.	___	___	X	___	X	___	___	___

Pre-commissioning Checklist - HVAC System Controls

For HVAC System: [_____]

Checklist Item	Q	M	E	T	C	D	O	U
Installation								
a. As-built shop drawings submitted.	___	___	X	X	___	___	___	___
b. Layout of control panel matches drawings.	___	___	X	X	___	___	___	___
c. Framed instructions mounted in or near control panel.	___	___	X	X	___	___	___	___
d. Components properly labeled (on inside and outside of panel).	___	___	X	X	___	___	___	___
e. Control components piped and/or wired to each labeled terminal strip.	___	___	X	X	___	___	___	___
f. EMCS connection made to each labeled terminal strip as shown.	___	___	X	X	___	___	___	___
g. Control wiring and tubing labeled at all terminations, splices, and junctions.	___	___	X	X	___	___	___	___
h. Shielded wiring used on electronic sensors.	__	__	X	X	___	___	___	___
Main Power and Control Air								
a. 110 volt AC power available to panel.	___	___	___	X	___	___	___	___
Testing, Commissioning, and Balancing								
a. Testing, Commissioning, and Balancing Report submitted.	___	___	X	___	___	___	___	___

Pre-commissioning Checklist - Energy Recovery System

For Energy Recovery System: [_____]

Checklist Item	Q	M	E	T	C	D	O	U
Installation								
a. Manufacturer's required maintenance clearance provided.	___	___	X	X	X	___	___	___
Wheel Rotation Correct								
a. Recovery wheel rotation speed adjusted to match varying supply and exhaust fan speed	.___	___	X	X	X	___	___	___

APPENDIX B

FUNCTIONAL PERFORMANCE TESTS CHECKLISTS

Functional Performance Test Checklist - Single Zone Air Handling Unit

For Air Handling Unit: [_____]

1. Functional Performance Test: Contractor shall verify operation of air handling unit as per specification including the following:

a. The following shall be verified when the supply and exhaust fans operating mode is initiated:

(1) All dampers in normal position. _____

(2) All valves in normal position. _____

(3) System safeties allow start if safety conditions are met. _____

b. Occupied mode of operation - economizer de-energized.

(1) Outside air damper at minimum position. _____

(2) Relief air damper open. _____

(4) Chilled water control valve modulating to maintain space cooling temperature set point. _____

(5) Hot water control valve modulating to maintain space heating temperature set point input from outside air temperature controller. _____

e. The following shall be verified when the supply fan off mode is initiated:

(1) All dampers in normal position. _____

(2) All valves in normal position. _____

(3) Fan de-energizes. _____

f. Verify cooling coil and heating coil operation by varying thermostat set point from cooling set point to heating set point and returning to cooling set point. _____

g. Verify safety shut down initiated by smoke detectors. _____

h. Verify safety shut down initiated by low temperature protection thermostat. _____

2. Certification: We the undersigned have witnessed the above functional performance tests and certify that the item tested has met the performance requirements in this section of the specifications.

Signature and Date

Functional Performance Test Checklist - Single Zone Air Handling Unit

For Air Handling Unit: [_____]

Contractor's Chief Quality Control Representative _____

Contractor's Mechanical Representative _____

Contractor's Electrical Representative _____

Contractor's Testing, Adjusting and Balancing Representative _____

Contractor's Controls Representative _____

Contracting Officer's Representative _____

Using Agency's Representative _____

Functional Performance Test Checklist - Air Cooled Condensing Unit

For Condensing Unit: [_____]

1. Functional Performance Test: Contractor shall demonstrate operation of refrigeration system as per specifications including the following: Start building air handler to provide load for condensing unit. Activate controls system start sequence as follows.

a. Start air handling unit. Verify control system energizes condensing unit start sequence. _____

b. Shut off air handling equipment to verify condensing unit de-energizes. _____

c. Restart air handling equipment one minute after condensing unit shut down. Verify condensing unit restart sequence. _____

2. Verify condensing unit amperage each phase and voltage phase to phase and phase to ground.

	PHASE 1	PHASE 2	PHASE 3
Amperage	_____	_____	_____
Voltage	_____	_____	
Voltage	_____		
Voltage to ground	_____	_____	_____

3. Record the following information:

Ambient dry bulb temperature	_____	degrees F
Ambient wet bulb temperature	_____	degrees F
Suction pressure	_____	psig
Discharge pressure	_____	psig

4. Unusual vibration, noise, etc.

_____

_____

5. Certification: We the undersigned have witnessed the above functional performance tests and certify that the item tested has met the performance requirements in this section of the specifications.

Signature and Date

Contractor's Chief Quality Control Representative _____

Contractor's Mechanical Representative _____

Contractor's Electrical Representative Representative _____

Contractor's Testing, Adjusting and Balancing _____

Functional Performance Test Checklist - Air Cooled Condensing Unit

For Condensing Unit: [_____]

Contractor's Controls Representative _____

Contracting Officer's Representative _____

Using Agency's Representative _____

Functional Performance Test Checklist - Fan Coil Units

The Contracting Officer will select fan coil units to be spot-checked during the functional performance test.

1. Functional Performance Test: Contractor shall demonstrate operation of selected fan coils as per specifications including the following:

b. Cooling/heating fan coils:

(1) Verify fan coil unit response to room temperature set point adjustment. Changes to be cooling set point to heating set point and return to cooling set point. _____

(2) Check blower fan air flow.
Check blower fan air flow. _____ cfm

(3) Check cooling coil water flow.
Check cooling coil water flow. _____ cfm

(4) Verify proper operation of cooling water control valve. _____

(5) Check cooling mode inlet air temperature.
Check cooling mode inlet air temperature. _____ degrees F

(6) Check cooling mode outlet air temperature.
Check cooling mode outlet air temperature. _____ degrees F

(7) Check heating coil water flow.
Check heating coil water flow. _____ gpm

(8) Verify proper operation of heating water control valve. _____

(9) Check heating mode inlet air temperature.
Check heating mode inlet air temperature. _____ degrees F

(10) Check heating mode outlet air temperature.
Check heating mode outlet air temperature. _____ degrees F

2. Certification: We the undersigned have witnessed the above functional performance tests and certify that the item tested has met the performance requirements in this section of the specifications.

Signature and Date

Contractor's Chief Quality Control Representative _____

Contractor's Mechanical Representative _____

Contractor's Electrical Representative _____

Contractor's Testing, Adjusting and Balancing Representative _____

Contractor's Controls Representative _____

Functional Performance Test Checklist - Fan Coil Units

Contracting Officer's Representative _____

Using Agency's Representative _____

Functional Performance Test Checklist - Unit Heaters

The Contracting Officer will select unit heaters to be spot-checked during the functional performance test.

1. Functional Performance Test: Contractor shall demonstrate operation of selected unit heaters as per specifications including the following:

a. Verify unit heater response to room temperature set point adjustment. Changes to be heating set point to heating set point minus 10 degrees and return to heating set point. _____

b. Check blower fan speed. _____rpm

c. Check heating mode inlet air temperature. Check heating mode inlet air temperature. _____ degrees F

d. Check heating mode outlet air temperature. Check heating mode outlet air temperature. _____ degrees F

2. Certification: We the undersigned have witnessed the above functional performance tests and certify that the item tested has met the performance requirements in this section of the specifications.

Signature and Date

Contractor's Chief Quality Control Representative _____

Contractor's Mechanical Representative _____

Contractor's Electrical Representative _____

Contractor's Testing, Adjusting and Balancing Representative _____

Contractor's Controls Representative _____

Contracting Officer's Representative _____

Using Agency's Representative _____

Functional Performance Test Checklist - HVAC Controls

For HVAC System: [_____]

The Contracting Officer will select HVAC control systems to undergo functional performance testing.

1. Functional Performance Test: Contractor shall verify operation of HVAC controls by performing the following tests:

a. Verify that controller is maintaining the set point by manually measuring the controlled variable with a thermometer, sling psychrometer, inclined manometer, etc.

b. Verify sensor/controller combination by manually measuring the controlled medium. Take readings from control panel display and compare readings taken manually. Record all readings.

Sensor _____
Manual measurement _____
Panel reading value _____

c. Verify system stability by changing the controller set point as follows:

(1) Air temperature - 10 degrees F

(2) Water temperature - 10 degrees F

(3) Static pressure - 10 percent of set point

(4) Relative humidity - percent (RH)

The control system shall be observed for 10 minutes after the change in set point. Instability or excessive hunting will be unacceptable.

d. Verify interlock with other HVAC controls.

e. Verify interlock with fire alarm control panel.

f. Verify interlock with EMCS.

g. Change controller set point 10 percent with EMCS and verify correct response.

2. Verify that operation of control system conforms to that specified in the sequence of operation.

3. Certification: We the undersigned have witnessed the above functional performance tests and certify that the item tested has met the performance requirements in this section of the specifications.

Signature and Date

Contractor's Chief Quality Control Representative _____

Contractor's Mechanical Representative _____

Functional Performance Test Checklist - HVAC Controls

For HVAC System: [_____]

Contractor's Electrical Representative _____

Contractor's Testing, Adjusting and Balancing Representative _____

Contractor's Controls Representative _____

Contractor's Officer's Representative _____

Using Agency's Representative _____

Functional Performance Test Checklist - Energy Recovery System

For Energy Recovery System: [_____]

1. Functional Performance Test: Contractor shall demonstrate operation of energy recovery system as per specifications including the following: Start equipment to provide energy source for recovery system.

a. Verify energy source is providing recoverable energy. _____

b. Verify recovery system senses available energy and activates. ____

c. Verify that recovery system deactivates when recoverable energy is no longer available. _____

2. Verify recovery system inlet/outlet readings, compare to design conditions and manufacturer's performance data.

	Design	Actual
Primary loop inlet temp (degrees F)	_____	_____
Primary loop outlet temp (degrees F)	_____	_____
Primary loop flow rate	_____	_____
Secondary loop inlet temp (degrees F)	_____	_____
Secondary loop outlet temp (degrees F)	_____	_____
Energy recovered BTU's)	_____	_____

3. Check and report unusual vibration, noise, etc.

_____

_____

4. Certification: We the undersigned have witnessed the above functional performance tests and certify that the item tested has met the performance requirements in this section of the specifications.

Signature and Date

Contractor's Chief Quality Control Representative_____

Contractor's Mechanical Representative _____

Contractor's Electrical Representative _____

Contractor's Testing , Adjusting and Balancing Representative

_____

Contractor's Controls Representative _____

Contractor's Officer's Representative _____

Using Agency's Representative _____

-- End of Section --

SECTION TABLE OF CONTENTS

DIVISION 16 - ELECTRICAL

SECTION 16120

INSULATED WIRE AND CABLE

11/91

PART 1 GENERAL

1.1 REFERENCES
1.2 SUBMITTALS
1.3 DELIVERY, STORAGE, AND HANDLING
1.4 PROJECT/SITE CONDITIONS

PART 2 PRODUCTS

2.1 MATERIALS
2.1.1 Wire Table
2.1.2 Rated Circuit Voltages
2.1.3 Conductors
2.1.3.1 Material
2.1.3.2 Size
2.1.3.3 Stranding
2.1.3.4 Conductor Shielding
2.1.3.5 Separator Tape
2.1.4 Insulation
2.1.4.1 Insulation Material
2.1.4.2 Insulation Thickness
2.1.4.3 Insulation Shielding
2.1.5 Jackets
2.1.5.1 Jacket Material
2.1.5.2 Jacket Thickness
2.1.6 Not Used
2.1.7 Identification
2.1.7.1 Color-coding
2.1.7.2 Shielded Cables Rated 2,001 Volts and Above
2.1.8 Cabling
2.1.9 Dimensional Tolerance
2.2 INSTALLATION INSTRUCTIONS
2.3 TESTS, INSPECTIONS, AND VERIFICATIONS
2.3.1 Cable Data
2.3.2 Inspection and Tests
2.3.2.1 High-Voltage Test Source
2.3.2.2 Shielded Cables Rated 2,001 Volts or Greater
2.3.2.3 Flame Tests
2.3.2.4 Independent Tests
2.3.2.5 Reports

PART 3 EXECUTION (Not Applicable)

-- End of Section Table of Contents --

SECTION 16120

INSULATED WIRE AND CABLE
11/91

PART 1 GENERAL

1.1 REFERENCES

The publications listed below form a part of this specification to the extent referenced. The publications are referred to in the text by basic designation only.

ASSOCIATION OF EDISON ILLUMINATING COMPANIES (AEIC)

AEIC CS5	(Oct 1987; 9th Ed) Thermoplastic and Crosslinked Polyethylene Insulated Shielded Power Cables Rated 5 Through 35 kV
AEIC CS6	(Oct 1987; 5th Ed; Rev Mar 1989) Ethylene Propylene Insulated Shielded Power Cables Rated 5 Through 69 kV

INSTITUTE OF ELECTRICAL AND ELECTRONICS ENGINEERS (IEEE)

IEEE Std 383	(1974; R 1992) Class 1E Electric Cables, Field Splices, and Connections for Nuclear Power Generating Stations

NATIONAL ELECTRICAL MANUFACTURERS ASSOCIATION (NEMA)

NEMA WC 7	(1988) Cross-Linked-Thermosetting-Polyethylene-Insulated Wire and Cable for the Transmission and Distribution of Electrical Energy
NEMA WC 8	(1988) Ethylene-Propylene-Rubber-Insulated Wire and Cable for the Transmission and Distribution of Electrical Energy

1.2 SUBMITTALS

Government approval is required for all submittals with a "GA" designation; submittals having an "FIO" designation are for information only. The following shall be submitted in accordance with Section 01330 SUBMITTAL PROCEDURES:

SD-01 Data

Installation Instructions; FIO.

The Contractor shall submit cable manufacturing data .

SD-09 Reports

Tests, Inspections, and Verifications; FIO.

Six certified copies of test reports shall be submitted by the contractor.

1.3 DELIVERY, STORAGE, AND HANDLING

Furnish cables on reels or coils. Each cable and the outside of each reel or coil, shall be plainly marked or tagged to indicate the cable length, voltage rating, conductor size, and manufacturer's lot number and reel number. Each coil or reel of cable shall contain only one continuous cable without splices. Cables for exclusively dc applications, as specified in paragraph HIGH VOLTAGE TEST SOURCE, shall be identified as such. Shielded cables rated 2,001 volts and above and shall be reeled and marked in accordance with Section I of AEIC CS5 or AEIC CS6, as applicable. Reels shall remain the property of the Contractor.

1.4 PROJECT/SITE CONDITIONS

PART 2 PRODUCTS

2.1 MATERIALS

2.1.1 Wire Table

Wire and cable shall be furnished in accordance with the requirements of the wire table below, and shall conform to the detailed requirements specified herein.

2.1.2 Rated Circuit Voltages

All wire and cable shall have minimum rated circuit voltages in accordance with Table 3-1 of NEMA WC 7 or NEMA WC 8.

2.1.3 Conductors

2.1.3.1 Material

Conductors shall conform to all the applicable requirements of Section 2 of NEMA WC 7 or Part 2 of NEMA WC 8 as applicable and shall be annealed copper. Copper conductors may be bare, or tin- or lead-alloy-coated, if required by the type of insulation used.

2.1.3.2 Size

Minimum wire size shall be No. 12 AWG for power and lighting circuits; No. 10 AWG for current transformer secondary circuits; No. 14 AWG for potential transformer, relaying, and control circuits; No. 16 AWG for annunciator circuits; and No. 19 AWG for alarm circuits. Minimum wire sizes for rated circuit voltages of 2,001 volts and above shall not be less than those listed for the applicable voltage in Table 3-1 of Section 3 of NEMA WC 7 or Part 3 of NEMA WC 8, as applicable.

2.1.3.3 Stranding

Conductor stranding classes cited herein shall be as defined in Appendix L of NEMA WC 7 or NEMA WC 8, as applicable. Lighting conductors No. 10 AWG and smaller shall be solid or have Class B stranding. Any conductors used between stationary and moving devices, such as hinged doors or panels, shall have Class H or K stranding. All other conductors shall have Class B or C stranding, except that conductors shown on the drawings, or in the

schedule, as No. 12 AWG may be 19 strands of No. 25 AWG, and conductors shown as No. 10 AWG may be 19 strands of No. 22 AWG.

2.1.3.4 Conductor Shielding

Conductor shielding conforming to paragraph 2.7 of NEMA WC 7 or NEMA WC 8, as applicable, shall be used on power cables having a rated circuit voltage above 2,000 volts. In addition, conductor shielding for shielded cables shall also comply with Section C of AEIC CS5 or AEIC CS6. Strict precautions shall be taken after application of the conductor shielding to prevent the inclusion of voids or contamination between the conductor shielding and the subsequently applied insulation.

2.1.3.5 Separator Tape

Where conductor shielding, strand filling, or other special conductor treatment is not required, a separator tape between conductor and insulation is permitted.

2.1.4 Insulation

2.1.4.1 Insulation Material

Insulation shall be cross-linked thermosetting polyethylene (XLPE) type, meeting the requirements of Section 3 or paragraph 7.7 of NEMA WC 7 as applicable, or an ethylene-propylene rubber (EPR) type meeting the requirements of Part 3 of NEMA WC 8. For shielded cables of rated circuit voltages above 2,000 volts, the following provisions shall also apply:

a. XLPE, if used, shall be tree-retardant.

b. Insulation shall be chemically bonded to conductor shielding.

c. The insulation material and its manufacturing, handling, extrusion and vulcanizing processes, shall all be subject to strict procedures to prevent the inclusion of voids, contamination, or other irregularities on or in the insulation. Insulation material shall be inspected for voids and contaminants. Inspection methods, and maximum allowable void and contaminant content shall be in accordance with Section B of AEIC CS5 or AEIC CS6, as applicable.

d. Cables with repaired insulation defects discovered during factory testing, or with splices or insulation joints, are not acceptable [unless specifically approved].

2.1.4.2 Insulation Thickness

The insulation thickness for each conductor shall be based on its rated circuit voltage.

a. Power Cables/Single-Conductor Control Cables, 2,000 Volts and Below - The insulation thickness for single-conductor cables rated 2,000 volts and below shall be as required by Table 3-1, Section 3 of NEMA WC 7 or Table 3-1, Part 3, of NEMA WC 8, as applicable. Column "A" thickness of Table 3-1 of NEMA WC 7will be permitted only for single-conductor cross-linked thermosetting polyethylene insulated cables without a jacket. NEMA WC 8 ethylene-propylene rubber-insulated conductors shall have a jacket. Column "B" thickness shall apply to single-conductor cables that require a jacket and to individual

conductors of multiple-conductor cables with an overall jacket.

b. Power Cables, Rated 2,001 Volts and Above - Thickness of insulation for power cables rated 2,001 volts and above shall be in accordance with the following:

(1) Non-shielded cables, 2,001 to 5,000 volts, shall comply with Note 3 to Table 3-1, of either NEMA WC 7 or NEMA WC 8, as applicable.

(2) Shielded cables rated 2,001 volts and above shall comply with Column B of Table B1, of AEIC CS5 or AEIC CS6, as applicable.

c. Multiple-Conductor Control Cables - The insulation thickness of multiple-conductor cables used for control and related purposes shall be as required by Table 7-32 of NEMA WC 7 or Table 7.5.1 of NEMA WC 8 as applicable.

2.1.4.3 Insulation Shielding

Unless otherwise specified, insulation shielding shall be provided for conductors having rated circuit voltages of 2,001 volts and above. The voltage limits above which insulation shielding is required, and the material requirements, are given in Section 4 of NEMA WC 7 or Part 4 of NEMA WC 8, as applicable. The material, if thermosetting, shall meet the wafer boil test requirements as described in Section D of AEIC CS5 or AEIC CS6, as applicable. The method of shielding shall be in accordance with the current practice of the industry; however, the application process shall include strict precautions to prevent voids or contamination between the insulation and the nonmetallic component. Voids, protrusions, and indentations of the shield shall not exceed the maximum allowances specified in Section C of AEIC CS5 or AEIC CS6, as applicable. The cable shall be capable of operating without damage or excessive temperature when the shield is grounded at both ends of each conductor. All components of the shielding system shall remain tightly applied to the components they enclose after handling and installation in accordance with the manufacturer's recommendations. Shielding systems which require heat to remove will not be permitted unless specifically approved.

2.1.5 Jackets

All cables shall have jackets meeting the requirements of Section 4 of NEMA WC 7, or Part 4 of NEMA WC 8, as applicable, and as specified herein. Individual conductors of multiple-conductor cables shall be required to have jackets only if they are necessary for the conductor to meet other specifications herein. Jackets of single-conductor cables and of individual conductors of multiple-conductor cables, except for shielded cables, shall be in direct contact and adhere or be vulcanized to the conductor insulation. Multiple-conductor cables and shielded single-conductor cables shall be provided with a common overall jacket, which shall be tightly and concentrically formed around the core. Repaired jacket defects found and corrected during manufacturing are permitted if the cable, including jacket, afterward fully meets these specifications and the requirements of the applicable standards.

2.1.5.1 Jacket Material

The jacket shall be one of the materials listed below. Variations from the materials required below will be permitted only if approved for each

specific use, upon submittal of sufficient data to prove that they exceed all specified requirements for the particular application.

a. General Use

(1) Heavy-duty black neoprene (NEMA WC 8, paragraph 4.4.3).

(2) Heavy-duty chlorosulfonated polyethylene (NEMA WC 8, paragraph 4.4.10).

(3) Heavy-duty cross-linked (thermoset) chlorinated polyethylene (NEMA WC 8, paragraph 4.4.11).

b. Accessible Use Only, 2,000 Volts or Less - Cables installed where they are entirely accessible, such as cable trays and raceways with removable covers, or where they pass through less than 10 feet of exposed conduit only, shall have jackets of one of the materials specified in above paragraph GENERAL USE, or the jackets may be of one of the following:

(1) General-purpose neoprene (NEMA WC 8, paragraph 4.4.4).

(2) Black polyethylene (NEMA WC 8, paragraph 4.4.6).

(3) Thermoplastic chlorinated polyethylene (NEMA WC 8, paragraph 4.4.7).

2.1.5.2 Jacket Thickness

The minimum thickness of the jackets at any point shall be not less than 80 percent of the respective nominal thicknesses specified below.

a. Multiple-Conductor Cables - Thickness of the jackets of the individual conductors of multiple-conductor cables shall be as required by Section 4, Table 4-6 of NEMA WC 7 or Part 4, Table 4-4 of NEMA WC 8, and shall be in addition to the conductor insulation thickness required by Column B of Table 3-1 of the applicable NEMA publication for the insulation used. Thickness of the outer jackets or sheaths of the assembled multiple-conductor cables shall be as required by Section 4, Table 4-7, of NEMA WC 7 or Part 4, Table 4-5, of NEMA WC 8.

b. Single-Conductor Cables - Single-conductor cables, if nonshielded, shall have a jacket thickness as specified in Section 4, Table 4-4 of NEMA WC 7 or Part 4, Table 4-2 of NEMA WC 8. If shielded, the jacket thickness shall be in accordance with the requirements of Section 4, Table 4-5 of NEMA WC 7 or Part 4, Table 4-3 of NEMA WC 8.

2.1.6 Not Used2.1.7 Identification

2.1.7.1 Color-coding

Insulation of individual conductors of multiple-conductor cables shall be color-coded in accordance with paragraph 5.3 of NEMA WC 8, except that colored braids will not be permitted. Only one color-code method shall be used for each cable construction type. Control cable color-coding shall be in accordance with Table 5-2 of NEMA WC 8. Power cable color-coding shall be black for Phase A, red for Phase B, blue for Phase C, white for grounded neutral, and green for an insulated grounding conductor, if included.

2.1.7.2 Shielded Cables Rated 2,001 Volts and Above

Marking shall be in accordance with Section H of AEIC CS5 or AEIC CS6, as applicable.

2.1.8 Cabling

Individual conductors of multiple-conductor cables shall be assembled with flame-and moisture-resistant fillers, binders, and a lay conforming to Part 5 of NEMA WC 8, except that flat twin cables will not be permitted. Fillers shall be used in the interstices of multiple-conductor round cables with a common covering where necessary to give the completed cable a substantially circular cross section. Fillers shall be non-hygroscopic material, compatible with the cable insulation, jacket, and other components of the cable. The rubber-filled or other approved type of binding tape shall consist of a material that is compatible with the other components of the cable and shall be lapped at least 10 percent of its width.

2.1.9 Dimensional Tolerance

The outside diameters of single-conductor cables and of multiple-conductor cables shall not vary more than 5 percent and 10 percent, respectively, from the manufacturer's published catalog data.

2.2 INSTALLATION INSTRUCTIONS

The following information shall be provided by the cable manufacturer for each size, conductor quantity, and type of cable furnished:

a. Minimum bending radius, in inches - For multiple-conductor cables, this information shall be provided for both the individual conductors and the multiple-conductor cable.

b. Pulling tension and sidewall pressure limits, in pounds.

c. Instructions for stripping semiconducting insulation shields, if furnished, with minimum effort without damaging the insulation.

d. Upon request, compatibility of cable materials and construction with specific materials and hardware manufactured by others shall be stated. Also, if requested, recommendations shall be provided for various cable operations, including installing, splicing, terminating, etc.

2.3 TESTS, INSPECTIONS, AND VERIFICATIONS

2.3.1 Cable Data

Manufacture of the wire and cable shall not be started until all materials to be used in the fabrication of the finished wire or cable have been approved by the Contracting Officer. Cable data shall be submitted for approval including dimensioned sketches showing cable construction, and sufficient additional data to show that these specifications will be satisfied.

2.3.2 Inspection and Tests

Inspection and tests of wire and cable furnished under these specifications

shall be made by and at the plant of the manufacturer, and shall be witnessed by the Contracting Officer or his authorized representative, unless waived in writing. The Government may perform further tests before or after installation. Testing in general shall comply with Section 6 of NEMA WC 7 or Part 6 of NEMA WC 8. Specific tests required for particular materials, components, and completed cables shall be as specified in the sections of the above standards applicable to those materials, components, and cable types. Tests shall also be performed in accordance with the additional requirements specified below.

2.3.2.1 High-Voltage Test Source

Where the applicable standards allow a choice, high-voltage tests for cables to be used exclusively on dc circuits shall be made with dc test voltages. Cables to be used exclusively on ac circuits shall be tested with ac test voltages. If both ac and dc will be present, on either the same or separate conductors of the cable, ac test voltages shall be used.

2.3.2.2 Shielded Cables Rated 2,001 Volts or Greater

The following tests shall be performed in addition to those specified above. Section or paragraph references are to AEIC CS5 or AEIC CS6 as applicable, unless otherwise stated.

a. High potential test voltages shall be as required by Table B1 of AEIC CS5 or AEIC CS6 as applicable, rather than by Table 3-1 of NEMA WC 7 or NEMA WC 8.

b. If high potential testing is done with an ac test voltage as specified in paragraph HIGH-VOLTAGE TEST SOURCE, an additional test shall be made using a dc test voltage rated at 75 percent of the specified full dc test voltage, for 5 consecutive minutes.

c. Production sampling tests shall be performed in accordance with Section D. Sampling frequency and failure contingencies shall be in accordance with paragraph G.3. Unless otherwise approved, samples shall not be taken from the middle of extruder runs of insulation or shielding made only for one continuous shipping length of cable, if such sampling will result in the need to repair the sampled area.

d. Partial discharge tests shall be performed in accordance with Section E, paragraph E.2, and Section F.

2.3.2.3 Flame Tests

All multiple-conductor and single-conductor cable assemblies shall pass IEEE Std 383 flame tests, paragraph 2.5, using the ribbon gas burner. Single-conductor cables and individual conductors of multiple-conductor cables shall pass the flame test of NEMA WC 7, paragraph 7.7.3.1.3. If such tests, however, have previously been made on identical cables, these tests need not be repeated. Instead, certified reports of the original qualifying tests shall be submitted. In this case the reports furnished under paragraph REPORTS, shall verify that all of each cable's materials, construction, and dimensions are the same as those in the qualifying tests.

2.3.2.4 Independent Tests

The Government may at any time make visual inspections, continuity or resistance checks, insulation resistance readings, power factor tests, or

dc high-potential tests at field test values. A cable's failure to pass these tests and inspections, or failure to produce readings consistent with acceptable values for the application, will be grounds for rejection of the cable.

2.3.2.5 Reports

Results of tests made shall be furnished. No wire or cable shall be shipped until authorized. Lot number and reel or coil number of wire and cable tested shall be indicated on the test reports.

PART 3 EXECUTION (Not Applicable)

WIRE TABLE

Item No.	Size, AWG or kcmil	No. of Conds.	Rated Circuit Voltage	Stranding	Comments	Quantity lin. ft.
01	#2CU	3	15kV	7	Match Existing	See Drawings

Class ___ stranding may be substituted for ___ where indicated by "*".

-- End of Section --

SECTION TABLE OF CONTENTS

DIVISION 16 - ELECTRICAL

SECTION 16375

ELECTRICAL DISTRIBUTION SYSTEM, UNDERGROUND

11/92

PART 1 GENERAL

1.1 REFERENCES
1.2 GENERAL REQUIREMENTS
1.2.1 Terminology
1.2.2 Service Conditions
1.3 SUBMITTALS
1.4 DELIVERY, STORAGE, AND HANDLING
1.5 EXTRA MATERIALS

PART 2 PRODUCTS

2.1 STANDARD PRODUCT
2.2 NAMEPLATES
2.2.1 General
2.2.2 Liquid-Filled Transformer Nameplates
2.3 CORROSION PROTECTION
2.3.1 Aluminum Materials
2.3.2 Ferrous Metal Materials
2.3.2.1 Hardware
2.3.2.2 Equipment
2.3.3 Finishing
2.4 CABLES
2.4.1 Medium-Voltage Cables
2.4.1.1 General
2.4.1.2 Ratings
2.4.1.3 Conductor Material
2.4.1.4 Insulation
2.4.1.5 Shielding
2.4.1.6 Neutrals
2.4.1.7 Jackets
2.4.2 Low-Voltage Cables
2.4.2.1 Conductor Material
2.4.2.2 Insulation
2.4.2.3 Jackets
2.4.2.4 Direct Buried
2.4.2.5 In Duct
2.5 CABLE JOINTS, TERMINATIONS, AND CONNECTORS
2.5.1 Medium-Voltage Cable Joints
2.5.2 Medium-Voltage Separable Insulated Connectors
2.5.3 Low-Voltage Cable Splices
2.5.4 Terminations
2.5.4.1 Factory Preformed Type
2.6 CONDUIT AND DUCTS
2.6.1 Metallic Conduit
2.6.2 Nonmetallic Ducts

2.6.2.1 Not Used
2.6.2.2 Concrete Encased Ducts
2.6.2.3 Direct Burial
2.6.3 Conduit Sealing Compound
2.7 MANHOLES, HANDHOLES, AND PULLBOXES
2.8 Not Used
2.9 TRANSFORMERS, SUBSTATIONS, AND SWITCHGEAR
2.9.1 Not Used
2.9.2 Pad-Mounted Transformers
2.9.2.1 High-Voltage Compartments
2.9.2.2 Not Used
2.9.2.3 Transformer Tank Sections
2.9.2.4 Low-Voltage Cable Compartments
2.9.2.5 Accessories
2.9.3 Not Used
2.9.4 Not Used
2.9.5 Pad-Mounted Sectionalizers
2.9.5.1 Ratings
2.9.5.2 Enclosures
2.9.6 Not Used
2.10 Not Used
2.10.1 Not Used
2.10.2 Not Used
2.10.3 Not Used
2.11 SURGE ARRESTERS
2.12 GROUNDING AND BONDING
2.12.1 Driven Ground Rods
2.12.2 Grounding Conductors
2.13 CONCRETE AND REINFORCEMENT
2.14 PADLOCKS
2.15 Not Used
2.16 LIQUID DIELECTRICS
2.17 FACTORY TESTS
2.18 Not Used
2.19 COORDINATED POWER SYSTEM PROTECTION
2.19.1 Scope of Analyses
2.19.2 Determination of Facts
2.19.3 Single Line Diagram
2.19.4 Fault Current Analysis
2.19.4.1 Method
2.19.4.2 Data
2.19.5 Coordination Study
2.19.6 Study Report

PART 3 EXECUTION

3.1 GENERAL INSTALLATION REQUIREMENTS
3.1.1 Conformance to Codes
3.1.2 Verification of Dimensions
3.1.3 Disposal of Liquid Dielectrics
3.2 CABLE AND BUSWAY INSTALLATION
3.2.1 Cable Installation Plan and Procedure
3.2.1.1 Cable Inspection
3.2.1.2 Duct Cleaning
3.2.1.3 Duct Lubrication
3.2.1.4 Cable Installation
3.2.1.5 Not Used
3.2.2 Duct Line
3.2.3 Direct-Burial

3.2.3.1 Trenching
3.2.3.2 Cable Burial
3.2.3.3 Other Requirements
3.2.3.4 Medium-Voltage Cable Joints or Low-Voltage Cable Splices
3.2.3.5 Cable Markers
3.2.4 Not Used
3.2.5 Electric Manholes
3.2.6 Not Used
3.3 CABLE JOINTS
3.4 Not Used
3.5 DUCT LINES
3.5.1 Requirements
3.5.2 Treatment
3.5.3 Concrete Encasement
3.5.4 Nonencased Direct-Burial
3.5.5 Installation of Couplings
3.5.5.1 Not Used
3.5.5.2 Plastic Duct
3.5.6 Duct Line Markers
3.6 MANHOLES, HANDHOLES, AND PULLBOXES
3.6.1 General
3.6.2 Electric Manholes
3.6.3 Communications Manholes
3.6.4 Handholes
3.6.5 Pullboxes
3.6.6 Ground Rods
3.7 PAD-MOUNTED EQUIPMENT INSTALLATION
3.7.1 Concrete Pads
3.7.1.1 Construction
3.7.1.2 Concrete and Reinforcement
3.7.1.3 Sealing
3.7.2 Padlocks
3.7.3 Not Used
3.8 Not Used
3.9 CONNECTIONS TO BUILDINGS
3.10 GROUNDING
3.10.1 Grounding Electrodes
3.10.2 Grounding and Bonding Connections
3.10.3 Grounding and Bonding Conductors
3.10.4 Surge Arrester Grounding
3.10.5 Manhole, Handhole, or Concrete Pullbox Grounding
3.10.6 Metal Splice Case Grounding
3.11 FIELD TESTING
3.11.1 General
3.11.2 Safety
3.11.3 Ground-Resistance Tests
3.11.4 Not Used
3.11.5 Medium-Voltage Cable Test
3.11.6 Low-Voltage Cable Test
3.11.7 Liquid-Filled Transformer Tests
3.11.8 Dry-Type Transformer Tests
3.11.9 Circuit Breaker Tests
3.11.10 Not Used
3.11.11 NOt Used
3.11.12 Pre-Energization Services
3.11.13 Operating Tests
3.12 MANUFACTURER'S FIELD SERVICE
3.12.1 Onsite Training
3.12.2 Installation Engineer

3.13 ACCEPTANCE

-- End of Section Table of Contents --

SECTION 16375

ELECTRICAL DISTRIBUTION SYSTEM, UNDERGROUND
11/92

PART 1 GENERAL

1.1 REFERENCES

The publications listed below form a part of this specification to the extent referenced. The publications are referred to in the text by basic designation only.

AMERICAN NATIONAL STANDARDS INSTITUTE (ANSI)

ANSI C37.72	(1987) Manually-Operated Dead-Front, Padmounted Switchgear with Load-Interrupting Switches and Separable Connectors for Alternating-Current Systems
ANSI C57.12.21	(1995) Requirements for Pad-Mounted, Compartmental-Type, Self-Cooled, Single-Phase Distribution Transformers with High-Voltage Bushings; (High-Voltage, 34 500 Grd Y/19 920 Volts and Below; Low-Voltage, 240/120; 167 kVA and Smaller)
ANSI C57.12.26	(1993) Pad-Mounted Compartmental-Type, Self-Cooled, Three-Phase Distribution Transformers for Use with Separable Insulated High-Voltage Connectors, High-Voltage, 34 500 Grd Y/19 920 Volts and Below; 2500 kVa and Smaller
ANSI C57.12.28	(1996) Switchgear and Transformers - Padmounted Equipment - Enclosure Integrity
ANSI C80.1	(1995) Rigid Steel Conduit - Zinc Coated
ANSI C119.1	(1986) Sealed Insulated Underground Connector Systems Rated 600 Volts
ANSI O5.1	(1992) Specifications and Dimensions for Wood Poles

AMERICAN SOCIETY FOR TESTING AND MATERIALS (ASTM)

ASTM A 48	(1994a) Gray Iron Castings
ASTM A 123/A 123M	(1997a) Zinc (Hot-Dip Galvanized) Coatings on Iron and Steel Products
ASTM A 153/A 153M	(1995) Zinc Coating (Hot-Dip) on Iron and Steel Hardware

ASTM B 3	(1995) Soft or Annealed Copper Wire
ASTM B 8	(1993) Concentric-Lay-Stranded Copper Conductors, Hard, Medium-Hard, or Soft
ASTM B 117	(1997) Operating Salt Spray (Fog) Apparatus
ASTM B 496	(1992) Compact Round Concentric-Lay-Stranded Copper Conductors
ASTM B 800	(1994) 8000 Series Aluminum Alloy Wire for Electrical Purposes - Annealed and Intermediate Tempers
ASTM B 801	(1995) Concentric-Lay-Stranded Conductors of 8000 Series Aluminum Alloy for Subsequent Covering or Insulation
ASTM C 478	(1997) Precast Reinforced Concrete Manhole Sections
ASTM C 478M	(1997) Precast Reinforced Concrete Mahhole Sections (Metric)
ASTM D 1654	(1992) Evaluation of Painted or Coated Specimens Subjected to Corrosive Environments
ASTM F 883	(1990) Padlocks

ASSOCIATION OF EDISON ILLUMINATING COMPANIES (AEIC)

AEIC CS5	(1994) Cross-linked Polyethylene Insulated Shielded Power Cables Rated 5 Through 46 kV
AEIC CS6	(1996) Ethylene Propylene Rubber Insulated Shielded Power Cables Rated 5 Through 69 kV

INSTITUTE OF ELECTRICAL AND ELECTRONICS ENGINEERS (IEEE)

IEEE C2	(1997) National Electrical Safety Code
IEEE ANSI/IEEE C37.20.1	(1993) Metal-Enclosed Low-Voltage Power Circuit-Breaker Switchgear
IEEE ANSI/IEEE C37.20.2	(1993; C37.20.2b) Metal-Clad and Station-Type Cubicle Switchgear
IEEE ANSI/IEEE C37.20.3	(1987; R 1992) Metal-Enclosed Interrupter Switchgear
IEEE ANSI/IEEE C37.34	(1994) Test Code for High-Voltage Air Switches
IEEE ANSI/IEEE C37.41	(1994; C37.41e) Design Tests for High-Voltage Fuses, Distribution Enclosed Single-Pole Air Switches, Fuse Disconnecting Switches, and Accessories

IEEE ANSI/IEEE C37.63	(1997) Requirements for Overhead, Pad-Mounted, Dry-Vault, and Submersible Automatic Line Sectionalizer for AC Systems
IEEE ANSI/IEEE C57.12.00	(1993) IEEE Standard General Requirements for Liquid-Immersed Distribution, Power, and Regulating Transformers
IEEE ANSI/IEEE C57.98	(1993) Guide for Transformer Impulse Tests
IEEE C62.1	(1989; R 1994) Surge Arresters for AC Power Circuits
IEEE C62.2	(1987; R 1994) Guide for the Application of Gapped Silicon-Carbide Surge Arresters for Alternating Current Systems
IEEE C62.11	(1993) IEEE Standard Metal-Oxide Surge Arresters for AC Power Circuits
IEEE Std 48	(1996) Standard Test Procedures and Requirements for Alternating-Current Cable Terminations 2.5 kV through 765 kV
IEEE Std 81	(1983) Guide for Measuring Earth Resistivity, Ground Impedance, and Earth Surface Potentials of a Ground System (Part 1)
IEEE Std 100	(1996) IEEE Standard Dictionary of Electrical and Electronics Terms
IEEE Std 242	(1986; R 1991) Recommended Practice for Protection and Coordination of Industrial and Commercial Power Systems
IEEE Std 386	(1995) Separable Insulated Connector Systems for Power Distribution Systems Above 600V
IEEE Std 399	(1997) Recommended Practice for Industrial and Commercial Power Systems Analysis
IEEE Std 404	(1993; errata) Cable Joints for Use with Extruded Dielectric Cable Rated 5000 V through 138 000 V and Cable Joints for Use with Laminated Dielectric Cable Rated 2500 V Through 500 000 V
IEEE Std 592	(1990; R 1996) Exposed Semiconducting Shields on Premolded High Voltage Cable Joints and Separable Insulated Connectors

NATIONAL ELECTRICAL MANUFACTURERS ASSOCIATION (NEMA)

NEMA FB 1	(1993) Fittings, Cast Metal Boxes and Conduit Bodies for Conduit and Cable Assemblies

NEMA LA 1	(1992) Surge Arresters
NEMA TC 5	(1990) Corrugated Polyolefin Coilable Plastic Utilities Duct
NEMA TC 6	(1990) PVC and ABS Plastic Utilities Duct for Underground Installation
NEMA TC 7	(1990) Smooth-Wall Coilable Polyethylene Electrical Plastic Duct
NEMA WC 7	(1991; Rev 1) Cross-Linked-Thermosetting-Polyethylene-Insulated Wire and Cable for the Transmission and Distribution of Electrical Energy
NEMA WC 8	(1991; Rev 1; Rev 2) Ethylene-Propylene-Rubber-Insulated Wire and Cable for the Transmission and Distribution of Electrical Energy

NATIONAL FIRE PROTECTION ASSOCIATION (NFPA)

NFPA 70	(1999) National Electrical Code

UNDERWRITERS LABORATORIES (UL)

UL 6	(1997) Rigid Metal Conduit
UL 467	(1993; Rev thru Aug 1996) Grounding and Bonding Equipment
UL 486A	(1997) Wire Connectors and Soldering Lugs for Use with Copper Conductors
UL 486B	(1997; Rev Jun 1997) Wire Connectors for Use with Aluminum Conductors
UL 514A	(1996; Rev Jul 1998) Metallic Outlet Boxes
UL 651	(1995; Rev thru Oct 1998) Schedule 40 and 80 Rigid PVC Conduit
UL 854	(1996; Rev Apr 1998) Service-Entrance Cables
UL 1072	(1995; Rev Mar 1998) Medium-Voltage Power Cable
UL 1242	(1996; Rev Apr 1997) Intermediate Metal Conduit

1.2 GENERAL REQUIREMENTS

1.2.1 Terminology

Terminology used in this specification is as defined in IEEE Std 100.

1.2.2 Service Conditions

Items provided under this section shall be specifically suitable for the following service conditions:

a. Altitude 1000 feet

b. Ambient Temperature _104 degrees F

c. Frequency 60 Hz

1.3 SUBMITTALS

Governmental approval is required for submittals with a "GA" designation; submittals having an "FIO" designation are for information only. The following shall be submitted in accordance with Section 01330 SUBMITTAL PROCEDURES:

SD-01 Data

Fault Current and Protective Devices Coordination Studies; GA.

The study shall be submitted with protective device equipment submittals. No time extension or similar contract modifications will be granted for work arising out of the requirements for this study. Approval of protective devices proposed shall be based on recommendations of this study. The Government shall not be held responsible for any changes to equipment, device ratings, settings, or additional labor for installation of equipment or devices ordered and/or procured prior to approval of the study.

Manufacturer's Catalog Data; GA1.

Catalog cuts, brochures, circulars, specifications, product data, and printed information in sufficient detail and scope to verify compliance with the requirements of the contract documents.

Material, Equipment, and Fixture Lists; GA1.

A complete itemized listing of equipment and materials proposed for incorporation into the work. Each entry shall include an item number, the quantity of items proposed, and the name of the manufacturer of each such item.

Installation Procedures; FIO.

As a minimum, installation procedures for transformers, substations, switchgear, and medium-voltage cable terminations and splices.

Procedures shall include cable pulling plans, diagrams, instructions, and precautions required to install, adjust, calibrate, and test the devices and equipment.

SD-04 Drawings

Electrical Distribution System; GA1.

Detail drawings consisting of equipment drawings, illustrations, schedules, instructions, diagrams manufacturers standard installation drawings and

other information necessary to define the installation and enable the Government to check conformity with the requirements of the contract drawings.

If departures from the contract drawings are deemed necessary by the Contractor, complete details of such departures shall be included with the detail drawings. Approved departures shall be made at no additional cost to the Government.

Detail drawings shall show how components are assembled, function together and how they will be installed on the project. Data and drawings for component parts of an item or system shall be coordinated and submitted as a unit. Data and drawings shall be coordinated and included in a single submission. Multiple submissions for the same equipment or system are not acceptable except where prior approval has been obtained from the Contracting Officer. In such cases, a list of data to be submitted later shall be included with the first submission. Detail drawings shall consist of the following:

a. Detail drawings showing physical arrangement, construction details, connections, finishes, materials used in fabrication, provisions for conduit or busway entrance, access requirements for installation and maintenance, physical size, electrical characteristics, foundation and support details, and equipment weight. Drawings shall be drawn to scale and/or dimensioned. All optional items shall be clearly identified as included or excluded.

b. Internal wiring diagrams of equipment showing wiring as actually provided for this project. External wiring connections shall be clearly identified.

Detail drawings shall as a minimum depict the installation of the following items:

a. Medium-voltage cables and accessories including cable installation plan.

b. Transformers.

c. Pad-mounted loadbreak switches.

d. Surge arresters.

As-Built Drawings; GA1.

The as-built drawings shall be a record of the construction as installed. The drawings shall include the information shown on the contract drawings as well as deviations, modifications, and changes from the contract drawings, however minor. The as-built drawings shall be a full sized set of prints marked to reflect deviations, modifications, and changes. The as-built drawings shall be complete and show the location, size, dimensions, part identification, and other information. Additional sheets may be added. The as-built drawings shall be jointly inspected for accuracy and completeness by the Contractor's quality control representative and by the Contracting Officer prior to the submission of each monthly pay estimate. Upon completion of the work, the Contractor shall provide three full sized sets of the marked prints to the Contracting

Officer for approval. If upon review, the as-built drawings are found to contain errors and/or omissions, they will be returned to the Contractor for correction. The Contractor shall correct and return the as-built drawings to the Contracting Officer for approval within 10 calendar days from the time the drawings are returned to the Contractor.

SD-09 Reports

Factory Test; FIO.

Certified factory test reports shall be submitted when the manufacturer performs routine factory tests, including tests required by standards listed in paragraph REFERENCES. Results of factory tests performed shall be certified by the manufacturer, or an approved testing laboratory, and submitted within 7 days following successful completion of the tests. The manufacturer's pass-fail criteria for tests specified in paragraph FIELD TESTING shall be included.

Field Testing; GA.

A proposed field test plan, 30 days prior to testing the installed system. No field test shall be performed until the test plan is approved. The test plan shall consist of complete field test procedures including tests to be performed, test equipment required, and tolerance limits.

Test Reports; GA.

Six copies of the information described below in 8-1/2 by 11 inch binders having a minimum of three rings, including a separate section for each test. Sections shall be separated by heavy plastic dividers with tabs.

a. A list of equipment used, with calibration certifications.

b. A copy of measurements taken.

c. The dates of testing.

d. The equipment and values to be verified.

e. The condition specified for the test.

f. The test results, signed and dated.

g. A description of adjustments made.

Materials and Equipment; GA.

Where materials or equipment are specified to conform to the standards of the Underwriters Laboratories (UL) or to be constructed or tested, or both, in accordance with the standards of the American National Standards Institute (ANSI), the Institute of Electrical and Electronics Engineers (IEEE), or the National Electrical Manufacturers Association (NEMA), the Contractor shall submit proof that the items provided conform to such requirements. The label of, or listing by, UL will be acceptable as evidence that the items conform. Either a certification or a published catalog specification data statement, to the effect that the item is in accordance with the referenced ANSI or IEEE standard, will be acceptable as

evidence that the item conforms. A similar certification or published catalog specification data statement to the effect that the item is in accordance with the referenced NEMA standard, by a company listed as a member company of NEMA, will be acceptable as evidence that the item conforms. In lieu of such certification or published data, the Contractor may submit a certificate from a recognized testing agency equipped and competent to perform such services, stating that the items have been tested and that they conform to the requirements listed, including methods of testing of the specified agencies. Compliance with above-named requirements does not relieve the Contractor from compliance with any other requirements of the specifications.

Cable Splicer Qualification; GA.

A certification that contains the names and the qualifications of people recommended to perform the splicing and termination of medium-voltage cables approved for installation under this contract. The certification shall indicate that any person recommended to perform actual splicing and terminations has been adequately trained in the proper techniques and have had at least three recent years of experience in splicing and terminating the same or similar types of cables approved for installation. In addition, any person recommended by the Contractor may be required to perform a practice splice and termination, in the presence of the Contracting Officer, before being approved as a qualified installer of medium-voltage cables. If that additional requirement is imposed, the Contractor shall provide short sections of the approved types of cables along with the approved type of splice and termination kits, and detailed manufacturer's instruction for the proper splicing and termination of the approved cable types.

Cable Installer Qualifications; FIO.

The Contractor shall provide at least one onsite person in a supervisory position with a documentable level of competency and experience to supervise all cable pulling operations. A resume shall be provided showing the cable installers' experience in the last three years, including a list of references complete with points of contact, addresses and telephone numbers.

SD-19 OPERATION AND MAINTENANCE MANUALS

Electrical Distribution System; GA.

Six copies of operation and maintenance manuals, within 14 calendar days following the completion of tests and including assembly, installation, operation and maintenance instructions, spare parts data which provides supplier name, current cost, catalog order number, and a recommended list of spare parts to be stocked. Manuals shall also include data outlining detailed procedures for system startup and operation, and a troubleshooting guide which lists possible operational problems and corrective action to be taken. A brief description of all equipment, basic operating features, and routine maintenance requirements shall also be included. Documents shall be bound in a binder marked or identified on the spine and front cover. A table of contents page shall be included and marked with pertinent contract information and contents of the manual. Tabs shall be provided to separate different types of documents, such as catalog ordering information, drawings, instructions, and spare parts data. Index sheets shall be provided for each section of the manual when warranted by the quantity of documents included under separate tabs or dividers.

Three additional copies of the instructions manual shall be provided within 30 calendar days following the manuals.

1.4 DELIVERY, STORAGE, AND HANDLING

Devices and equipment shall be visually inspected by the Contractor when received and prior to acceptance from conveyance. Stored items shall be protected from the environment in accordance with the manufacturer's published instructions. Damaged items shall be replaced. Oil filled transformers and switches shall be stored in accordance with the manufacturer's requirements. Wood poles held in storage for more than 2 weeks shall be stored in accordance with ANSI O5.1. Handling of wood poles shall be in accordance with ANSI O5.1, except that pointed tools capable of producing indentations more than 1 inch in depth shall not be used. Metal poles shall be handled and stored in accordance with the manufacturer's instructions.

1.5 EXTRA MATERIALS

One additional spare fuse or fuse element for each furnished fuse or fuse element shall be delivered to the contracting officer when the electrical system is accepted. Two complete sets of all special tools required for maintenance shall be provided, complete with a suitable tool box. Special tools are those that only the manufacturer provides, for special purposes (to access compartments, or operate, adjust, or maintain special parts).

PART 2 PRODUCTS

2.1 STANDARD PRODUCT

Material and equipment shall be the standard product of a manufacturer regularly engaged in the manufacture of the product and shall essentially duplicate items that have been in satisfactory use for at least 2 years prior to bid opening. Items of the same classification shall be identical including equipment, assemblies, parts, and components.

2.2 NAMEPLATES

2.2.1 General

Each major component of this specification shall have the manufacturer's name, address, type or style, model or serial number, and catalog number on a nameplate securely attached to the equipment. Nameplates shall be made of noncorrosive metal. Equipment containing liquid dielectrics shall have the type of dielectric on the nameplate. Sectionalizer switch nameplates shall have a schematic with all switch positions shown and labeled. As a minimum, nameplates shall be provided for transformers, circuit breakers, meters, switches, and switchgear.

2.2.2 Liquid-Filled Transformer Nameplates

Power transformers shall be provided with nameplate information in accordance with IEEE ANSI/IEEE C57.12.00. Nameplates shall indicate the number of gallons and composition of liquid-dielectric, and shall be permanently marked with a statement that the transformer dielectric to be supplied is non-polychlorinated biphenyl. If transformer nameplate is not so marked, the Contractor shall furnish manufacturer's certification for each transformer that the dielectric is non-PCB classified, with less than

50 ppm PCB content in accordance with paragraph LIQUID DIELECTRICS. Certifications shall be related to serial numbers on transformer nameplates. Transformer dielectric exceeding the 50 ppm PCB content or transformers without certification will be considered as PCB insulated and will not be accepted.

2.3 CORROSION PROTECTION

2.3.1 Aluminum Materials

Aluminum shall not be used.

2.3.2 Ferrous Metal Materials

2.3.2.1 Hardware

Ferrous metal hardware shall be hot-dip galvanized in accordance with ASTM A 153/A 153M and ASTM A 123/A 123M.

2.3.2.2 Equipment

Equipment and component items, including but not limited to transformer stations and ferrous metal luminaries not hot-dip galvanized or porcelain enamel finished, shall be provided with corrosion-resistant finishes which shall withstand 120hours of exposure to the salt spray test specified in ASTM B 117 without loss of paint or release of adhesion of the paint primer coat to the metal surface in excess of 1/16 inch from the test mark. The scribed test mark and test evaluation shall be in accordance with ASTM D 1654 with a rating of not less than 7 in accordance with TABLE 1, (procedure A). Cut edges or otherwise damaged surfaces of hot-dip galvanized sheet steel or mill galvanized sheet steel shall be coated with a zinc rich paint conforming to the manufacturer's standard.

2.3.3 Finishing

Painting required for surfaces not otherwise specified and finish painting of items only primed at the factory shall be as specified in Section 09900 PAINTING, GENERAL.

2.4 CABLES

Cables shall be single conductor type unless otherwise indicated.

2.4.1 Medium-Voltage Cables

2.4.1.1 General

Cable construction shall be Type MV, conforming to NFPA 70 and UL 1072. Cables shall be manufactured for use in duct or direct burial applications as indicated.

2.4.1.2 Ratings

Cables shall be rated for a circuit voltage of15 kV.

2.4.1.3 Conductor Material

Underground cables shall be soft drawn copper complying with ASTM B 3 and ASTM B 8 for regular concentric and compressed stranding or ASTM B 496 for

compact stranding.

2.4.1.4 Insulation

Cable insulation shall be cross-linked thermosetting polyethylene (XLP) insulation conforming to the requirements of NEMA WC 7 and AEIC CS5. A 133 percent insulation level shall be used on 15 kV .

2.4.1.5 Shielding

Cables rated for 2 kV and above shall have a semiconducting conductor shield, a semiconducting insulation shield, and an overall copper wire shield for each phase. The shield wire shall be sized to meet IEEE C2 requirements for a ground fault availability of 10,000 amperes.

2.4.1.6 Neutrals

Neutral conductors of shall be copper employing the same insulation and jacket materials as phase conductors, except that a 600-volt insulation rating is acceptable..

2.4.1.7 Jackets

Cables shall be provided with a PVC jacket. Direct buried cables shall be rated for direct burial.

2.4.2 Low-Voltage Cables

Cables shall be rated 600 volts and shall conform to the requirements of NFPA 70, and must be UL listed for the application or meet the applicable section of either ICEA or NEMA standards.

2.4.2.1 Conductor Material

Underground cables shall be [annealed copper complying with ASTM B 3 and ASTM B 8] [Type AA-8000 aluminum conductors complying with ASTM B 800 and ASTM B 801]. Intermixing of copper and aluminum conductors is not permitted.

2.4.2.2 Insulation

Insulation must be in accordance with NFPA 70, and must be UL listed for the application or meet the applicable sections of either ICEA, or NEMA standards.

2.4.2.3 Jackets

Multiconductor cables shall have an overall PVC outer jacket.

2.4.2.4 Direct Buried

Single and multi-conductor cables shall of a type identified for direct burial. Service entrance cables shall conform to UL 854 for Type USE service entrance cable.

2.4.2.5 In Duct

Cables shall be single-conductor cable, in accordance with NFPA 70. Cables in factory-installed, coilable-plastic-duct assemblies shall conform to

NEMA TC 5 or NEMA TC 7.

2.5 CABLE JOINTS, TERMINATIONS, AND CONNECTORS

2.5.1 Medium-Voltage Cable Joints

Medium-voltage cable joints shall comply with IEEE Std 404 and IEEE Std 592. Medium-voltage cable terminations shall comply with IEEE Std 48. Joints shall be the standard products of a manufacturer and shall be either of the factory preformed type or of the kit type containing tapes and other required parts. Joints shall have ratings not less than the ratings of the cables on which they are installed. Splice kits may be of the heat-shrinkable type for voltages up to 15 kV, of the premolded splice and connector type, the conventional taped type, or the resin pressure-filled overcast taped type for voltages up to 35 kV; except that for voltages of 7.5 kV or less a resin pressure-filled type utilizing a plastic-tape mold is acceptable. Joints used in manholes, handholes, vaults and pull boxes shall be certified by the manufacturer for waterproof, submersible applications.

2.5.2 Medium-Voltage Separable Insulated Connectors

Separable insulated connectors shall comply with IEEE Std 386 and IEEE Std 592 and shall be of suitable construction or standard splice kits shall be used. Separable insulated connectors are acceptable for voltages up to 35 kV. Connectors shall be of the loadbreak type as indicated, of suitable construction for the application and the type of cable connected, and shall include cable shield adaptors. Separable insulated connectors shall not be used as substitutes for conventional permanent splices. External clamping points and test points shall be provided.

2.5.3 Low-Voltage Cable Splices

Low-voltage cable splices and terminations shall be rated at not less than 600 Volts. Splices in conductors No. 10 AWG and smaller shall be made with an insulated, solderless, pressure type connector, conforming to the applicable requirements of UL 486A. Splices in conductors No. 8 AWG and larger shall be made with noninsulated, solderless, pressure type connector, conforming to the applicable requirements of UL 486A and UL 486B. Splices shall then be covered with an insulation and jacket material equivalent to the conductor insulation and jacket. Splices below grade or in wet locations shall be sealed type conforming to ANSI C119.1 or shall be waterproofed by a sealant-filled, thick wall, heat shrinkable, thermosetting tubing or by pouring a thermosetting resin into a mold that surrounds the joined conductors.

2.5.4 Terminations

Terminations shall be in accordance with IEEE Std 48, Class 1 or Class 2; of the molded elastomer, wet-process porcelain, prestretched elastomer, or heat-shrinkable elastomer. Acceptable elastomers are track-resistant silicone rubber or track-resistant ethylene propylene compounds, such as ethylene propylene rubber or ethylene propylene diene monomer. Separable insulated connectors may be used for apparatus terminations, when such apparatus is provided with suitable bushings. Terminations shall be of the outdoor type, except that where installed inside outdoor equipment housings which are sealed against normal infiltration of moisture and outside air, indoor, Class 2 terminations are acceptable. Class 3 terminations are not acceptable. Terminations, where required, shall be provided with mounting

brackets suitable for the intended installation and with grounding provisions for the cable shielding, metallic sheath, and armor.

2.5.4.1 Factory Preformed Type

Molded elastomer, wet-process porcelain, prestretched, and heat-shrinkable terminations shall utilize factory preformed components to the maximum extent practicable rather than tape build-up. Terminations shall have basic impulse levels as required for the system voltage level..

2.6 CONDUIT AND DUCTS

Duct lines shall be nonencased direct-burial, thick-wall type. Duct lines shall be concrete-encased, thin-wall type for duct lines between manholes and for other medium-voltage lines. Low-voltage lines or Communication lines run elsewhere may be direct-burial, thick-wall type.] Where concrete encasement is not required, low-voltage circuits may utilize factory-installed cable in coilable plastic duct.

2.6.1 Metallic Conduit

Intermediate metal conduit shall comply with UL 1242. Rigid galvanized steel conduit shall comply with UL 6 and ANSI C80.1. Metallic conduit fittings and outlets shall comply with UL 514A and NEMA FB 1.

2.6.2 Nonmetallic Ducts

2.6.2.1 Not Used

2.6.2.2 Concrete Encased Ducts

UL 651 Schedule 40 or NEMA TC 6 Type EB.

2.6.2.3 Direct Burial

UL 651 Schedule 40and Schedule 80 as indicated, or NEMA TC 6 Type DB.

2.6.3 Conduit Sealing Compound

Compounds for sealing ducts and conduit shall have a putty-like consistency workable with the hands at temperatures as low as 35 degrees F, shall neither slump at a temperature of 300 degrees F, nor harden materially when exposed to the air. Compounds shall adhere to clean surfaces of fiber or plastic ducts; metallic conduits or conduit coatings; concrete, masonry, or lead; any cable sheaths, jackets, covers, or insulation materials; and the common metals. Compounds shall form a seal without dissolving, noticeably changing characteristics, or removing any of the ingredients. Compounds shall have no injurious effect upon the hands of workmen or upon materials.

2.7 MANHOLES, HANDHOLES, AND PULLBOXES

Manholes, handholes, and pullboxes shall be as indicated. Strength of manholes, handholes, and pullboxes and their frames and covers shall conform to the requirements of IEEE C2. Precast-concrete manholes shall have the required strength established by ASTM C 478, ASTM C 478M. Frames and covers shall be made of gray cast iron and a machine-finished seat shall be provided to ensure a matching joint between frame and cover. Cast iron shall comply with ASTM A 48, Class 30B, minimum. Handholes for low voltage cables installed in parking lots, sidewalks, and turfed areas shall

be fabricated from an aggregate consisting of sand and with continuous woven glass strands having an overall compressive strength of at least 10,000 psi and a flexural strength of at least5,000 psi. Pullbox and handhole covers in sidewalks, and turfed areas shall be of the same material as the box. Concrete pullboxes shall consist of precast reinforced concrete boxes, extensions, bases, and covers.

2.8 Not Used

2.9 TRANSFORMERS, SUBSTATIONS, AND SWITCHGEAR

Transformers, substations, and switchgear shall be of the outdoor type having the ratings and arrangements indicated. Medium-voltage ratings of cable terminations shall be 15 kV between phases for 133 percent insulation level.

2.9.1 Not Used

2.9.2 Pad-Mounted Transformers

Pad-mounted transformers shall comply with ANSI C57.12.26 and shall be of the radial type. Pad-mounted transformer stations shall be assembled and coordinated by one manufacturer and each transformer station shall be shipped as a complete unit so that field installation requirements are limited to mounting each unit on a concrete pad and connecting it to primary and secondary lines. Stainless steel pins and hinges shall be provided. Barriers shall be provided between high- and low-voltage compartments. High-voltage compartment doors shall be interlocked with low-voltage compartment doors to prevent access to any high-voltage section unless its associated low-voltage section door has first been opened. Compartments shall be sized to meet the specific dimensional requirements of ANSI C57.12.26. Pentahead locking bolts shall be provided with provisions for a padlock.

2.9.2.1 High-Voltage Compartments

The high-voltage compartment shall be dead-front construction. Primary switching and protective devices shall include oil-immersed, current-limiting, bayonet-type fuses, medium-voltage separable loadbreak connectors, universal bushing wells and inserts or integral one piece bushings and surge arresters. Fuses shall comply with the requirements of paragraph METERING AND PROTECTIVE DEVICES. Fuses shall be interlocked with switches so that fuses can be removed only when the associated switch is in the "OPEN" position. Adjacent to medium-voltage cable connections, a nameplate or equivalent stencilled inscription shall be provided inscribed "DO NOT OPEN CABLE CONNECTORS UNLESS SWITCH IS OPEN." Surge arresters shall be fully insulated and configured to terminate on the same bushing as the primary cable by means of a loadbreak, feed-through bushing insert.

2.9.2.2 Not Used

2.9.2.3 Transformer Tank Sections

Transformers shall comply with IEEE ANSI/IEEE C57.12.00, ANSI C57.12.21, and ANSI C57.12.26 and shall be of the less-flammable, liquid-insulated type with [dimethyl silicone liquid. Transformers shall be suitable for outdoor use and shall have 2 separate windings per phase. Standard NEMA primary taps shall be provided. Primary taps 4, 2-1/2 percent rated kVA

high-voltage taps shall be provided 2 above and 2 below rated, primary voltage. Operating handles for primary tap changers for de-energized operation shall be located within high-voltage compartments, externally to transformer tanks. Adjacent to the tap changer operating handle, a nameplate or equivalent stenciled inscription shall be provided and inscribed "DO NOT OPERATE UNDER LOAD." Transformer ratings at 60 Hz shall be as follows:

Three-phase capacity.....750 kVA.

Impedance.....NEMA.

Temperature Rise.....65 degrees C.

High-voltage winding.....13.8 kV volts.

High-voltage winding connections.....DELTA.

Low-voltage winding.....120/208 volts.

Low-voltage winding connections..... ..... GND'D-WYE

2.9.2.4 Low-Voltage Cable Compartments

Neutrals shall be provided with fully-insulated bushings. Clamp type cable terminations, suitable for copper conductors entering from below, shall be provided as necessary.

2.9.2.5 Accessories

High-voltage warning signs shall be permanently attached to each side of transformer stations. Voltage warning signs shall comply with IEEE C2. Copper-faced steel or stainless steel ground connection pads shall be provided in both the high- and low-voltage compartments. Dial-type thermometer, liquid-level gauge, and drain valve with built-in sampling device shall be provided for each transformer station. Insulated-bushing-type parking stands shall be provided adjacent to each separable load-break elbow to provide for cable isolation during sectionalizing operations.

2.9.3 Not Used

2.9.4 Not Used

2.9.5 Pad-Mounted Sectionalizers

Pad-mounted, sectionalizing switches shall conform to the requirements of IEEE ANSI/IEEE C37.63. The switchgear shall be configured with incoming compartments andair-insulated, load-interrupter switches as indicated. The outgoing compartments shall be provided with non-reclosing sectionalizers.

2.9.5.1 Ratings

Ratings at 60 Hz shall be:

Nominal voltage (kV).....13.8 kV.

Rated maximum voltage (kV).....15 kV.

Rated continuous primary current (A).....200 Amps.

Three-second short-time current-carrying capacity (kA).....14 kA.

BIL (kV).....95.

2.9.5.2 Enclosures

Switchgear enclosures shall be of freestanding, self-supporting construction provided with separate incoming and outgoing compartments configured for bottom cable entry. Enclosures shall be of deadfront construction, provided with a hinged door for access to each compartment, and conform to the requirements of ANSI C57.12.28, ANSI C37.72, and IEEE ANSI/IEEE C37.20.3, Category A.

2.9.6 Not Used

2.10 Not Used

2.10.1 Not Used

2.10.2 Not Used

2.10.3 Not Used

2.11 SURGE ARRESTERS

Surge arresters shall comply with NEMA LA 1, IEEE C62.1, IEEE C62.2, and IEEE C62.11 and shall be provided where indicated. Arresters shall be distribution class, rated as shown. Arresters for use at elevations in excess of 6000 feet above mean sea level shall be specifically rated for that purpose. Arresters shall be equipped with mounting brackets suitable for the indicated installations. Arresters shall be of the metal-oxide varistor type.

2.12 GROUNDING AND BONDING

2.12.1 Driven Ground Rods

Ground rods shall be copper-clad steel conforming to UL 467 not less than 5/8 inch in diameter by 10 feet in length. Sectional type rods may be used.

2.12.2 Grounding Conductors

Grounding conductors shall be bare, except where installed in conduit with associated phase conductors. Insulated conductors shall be of the same material as phase conductors and green color-coded, except that conductors shall be rated no more than 600 volts. Bare conductors shall be ASTM B 8 soft-drawn unless otherwise indicated. Aluminum is not acceptable.

2.13 CONCRETE AND REINFORCEMENT

Concrete work shall have minimum 3000 psi compressive strength and conform to the requirements of Section 03300 CAST-IN-PLACE STRUCTURAL CONCRETE. Concrete reinforcing shall be as specified in Section 03200 CONCRETE REINFORCEMENT.

2.14 PADLOCKS

Padlocks shall conform to ASTM F 883, Type EPC, size 2.

2.15 Not Used

2.16 LIQUID DIELECTRICS

Liquid dielectrics for transformers, capacitors, reclosers, and other liquid-filled electrical equipment shall be non-polychlorinated biphenyl (PCB) less-flammable liquid as specified. Nonflammable fluids shall not be used. Tetrachloroethylene (perchloroethylene) and 1, 2, 4 trichlorobenzene fluids shall not be used..

2.17 FACTORY TESTS

Factory tests shall be performed, as follows, in accordance with the applicable publications and with other requirements of these specifications. The Contracting Officer shall be notified at least 14 days before the equipment is ready for testing. The Contracting Officer reserves the right to witness the tests.

a. Transformers: Manufacturer's standard tests in accordance with IEEE ANSI/IEEE C57.12.00.

b. Transformers rated 200 kVA and above: Reduced full-wave, chopped-wave, and full-wave impulse test on each line and neutral terminal, in accordance with IEEE ANSI/IEEE C57.98.

c. High-Voltage Air Switches: Manufacturer's standard tests in accordance with IEEE ANSI/IEEE C37.34 and IEEE ANSI/IEEE C37.41.

d. Outdoor Switchgear: Manufacturer's standard tests in accordance with IEEE ANSI/IEEE C37.20.1, IEEE ANSI/IEEE C37.20.2, and IEEE ANSI/IEEE C37.20.3.

2.18 Not Used

2.19 COORDINATED POWER SYSTEM PROTECTION

Analyses shall be prepared to demonstrate that the equipment selected and system constructed meet the contract requirements for equipment ratings, coordination, and protection. They shall include a load flow analysis, a fault current analysis, and a protective device coordination study. The studies shall be performed by a registered professional engineer with demonstrated experience in power system coordination in the last three years. The Contractor shall provide a list of references complete with points of contact, addresses and telephone numbers. The selection of the engineer is subject to the approval of the Contracting Officer.

2.19.1 Scope of Analyses

The fault current analysis, and protective device coordination study shall begin at: the source bus and extend down to system bused where fault availability is 10,000 amperes (symmetrical) for building/facility 600 volt level distribution buses.

2.19.2 Determination of Facts

The time-current characteristics, features, and nameplate data for each existing protective device shall be determined and documented. The Contractor shall coordinate with the commercial power company for fault current availability at the site..

2.19.3 Single Line Diagram

A single line diagram shall be prepared to show the electrical system buses, devices, transformation points, and all sources of fault current (including generator and motor contributions). A fault-impedance diagram or a computer analysis diagram may be provided. Each bus, device or transformation point shall have a unique identifier. If a fault-impedance diagram is provided, impedance data shall be shown. Locations of switches, breakers, and circuit interrupting devices shall be shown on the diagram together with available fault data, and the device interrupting rating.

2.19.4 Fault Current Analysis

2.19.4.1 Method

The fault current analysis shall be performed in accordance with methods described in IEEE Std 242, and IEEE Std 399.

2.19.4.2 Data

Actual data shall be utilized in fault calculations. Bus characteristics and transformer impedances shall be those proposed. Data shall be documented in the report.

2.19.5 Coordination Study

The study shall demonstrate that the maximum possible degree of selectively has been obtained between devices specified, consistent with protection of equipment and conductors from damage from overloads and fault conditions. The study shall include a description of the coordination of the protective devices in this project. Provide a written narrative that describes: which devices may operate in the event of a fault at each bus; the logic used to arrive at device ratings and settings; situations where system coordination is not achievable due to device limitations (an analysis of any device curves which overlap); coordination between upstream and downstream devices; and any relay settings. Recommendations to improve or enhance system reliability, and detail where such changes would involve additions or modifications to the contract and cost changes (addition or reduction) shall be provided. Composite coordination plots shall be provided on log-log graph paper.

2.19.6 Study Report

a. The report shall include a narrative describing: the analyses performed; the bases and methods used; and the desired method of coordinated protection of the power system.

b. The study shall include descriptive and technical data for existing devices and new protective devices proposed. The data shall include manufacturers published data, nameplate data, and definition of the fixed or adjustable features of the existing or new protective devices.

c. The report shall document base distribution system data including system voltages, fault MVA, system X/R ratio, time-current characteristics curves, current transformer ratios, and relay device numbers and settings;.

d. The report shall contain fully coordinated composite time-current characteristic curves for each bus in the system, as required to ensure coordinated power system protection between protective devices or equipment. The report shall include recommended ratings and settings of all protective devices in tabulated form.

e. The report shall provide the calculation performed for the analyses, including computer analysis programs utilized. The name of the software package, developer, and version number shall be provided.

PART 3 EXECUTION

3.1 GENERAL INSTALLATION REQUIREMENTS

Equipment and devices shall be installed and energized in accordance with the manufacturer's published instructions. Circuits installed aerially shall conform to the requirements of Section 16370 ELECTRICAL DISTRIBUTION SYSTEM, AERIAL. Steel conduits installed underground shall be installed and protected from corrosion in conformance with the requirements of Section 16415 ELECTRICAL WORK, INTERIOR. Except as covered herein, excavation, trenching, and backfilling shall conform to the requirements of Section 02316 EXCAVATION, TRENCHING, AND BACKFILLING FOR UTILITIES SYSTEMS. Concrete work shall have minimum 3000 psi compressive strength and conform to the requirements of Section 03300 CAST-IN-PLACE STRUCTURAL CONCRETE.

3.1.1 Conformance to Codes

The installation shall comply with the requirements and recommendations of NFPA 70 and IEEE C2 as applicable.

3.1.2 Verification of Dimensions

The Contractor shall become familiar with details of the work, shall verify dimensions in the field, and shall advise the Contracting Officer of any discrepancy before performing any work.

3.1.3 Disposal of Liquid Dielectrics

PCB-contaminated dielectrics must be marked as PCB and transported to and incinerated by an approved EPA waste disposal facility. The Contractor shall furnish certification of proper disposal. Contaminated dielectrics shall not be diluted to lower the contamination level.

3.2 CABLE AND BUSWAY INSTALLATION

The Contractor shall obtain from the manufacturer an installation manual or set of instructions which addresses such aspects as cable construction, insulation type, cable diameter, bending radius, cable temperature, lubricants, coefficient of friction, conduit cleaning, storage procedures, moisture seals, testing for and purging moisture, etc. The Contractor shall then [prepare a checklist of significant requirements] [perform pulling calculations and prepare a pulling plan] which shall be submitted along with the manufacturers instructions in accordance with SUBMITTALS.

3.2.1 Cable Installation Plan and Procedure

Cable shall be installed strictly in accordance with the cable manufacturer's recommendations. Each circuit shall be identified by means of a fiber, laminated plastic, or non-ferrous metal tags, or approved equal, in each manhole, handhole, junction box, and each terminal. Each tag shall contain the following information; cable type, conductor size, circuit number, circuit voltage, cable destination and phase identification.

3.2.1.1 Cable Inspection

The cable reel shall be inspected for correct storage positions, signs of physical damage, and broken end seals. If end seal is broken, moisture shall be removed from cable in accordance with the cable manufacturer's recommendations.

3.2.1.2 Duct Cleaning

Duct shall be cleaned with an assembly that consists of a flexible mandrel (manufacturers standard product in lengths recommended for the specific size and type of duct) that is 1/4 inch less than inside diameter of duct, 2 wire brushes, and a rag. The cleaning assembly shall be pulled through conduit a minimum of 2 times or until less than a volume of 8 cubic inches of debris is expelled from the duct.

3.2.1.3 Duct Lubrication

The cable lubricant shall be compatible with the cable jacket for cable that is being installed. Application of lubricant shall be in accordance with lubricant manufacturer's recommendations.

3.2.1.4 Cable Installation

The Contractor shall provide a cable feeding truck and a cable pulling winch as required. The Contractor shall provide a pulling grip or pulling eye in accordance with cable manufacturer's recommendations. The pulling grip or pulling eye apparatus shall be attached to polypropylene or manilla rope followed by lubricant front end packs and then by power cables. A dynamometer shall be used to monitor pulling tension. Pulling tension shall not exceed cable manufacturer's recommendations. The Contractor shall not allow cables to cross over while cables are being fed into duct. For cable installation in cold weather, cables shall be kept at 50 degrees F temperature for at least 24 hours before installation.

3.2.1.5 Not Used

3.2.2 Duct Line

Medium-voltage cables shall be installed in duct lines where indicated. Cable joints in medium-voltage cables shall be made in manholes or approved pullboxes only. Neutral and grounding conductors shall be installed in the same duct with their associated phase conductors.

3.2.3 Direct-Burial

Cables shall be buried directly in the earth as indicated. Minimum cover

from the top of a cable to finished grade shall be 24 inches, but not less than the depth of the frost line, for medium voltage cables.

3.2.3.1 Trenching

Trenches for direct-burial cables shall be excavated to depths required to provide the minimum necessary cable cover. Bottoms of trenches shall be smooth and free of stones and sharp objects. Where bottoms of trenches comprise materials other than sand, a 3 inch layer of sand shall be laid first and compacted to approximate densities of surrounding firm soil.

3.2.3.2 Cable Burial

Cables shall be unreeled along the sides of or in trenches and carefully placed on sand or earth bottoms. Pulling cables into direct-burial trenches from a fixed reel position will not be permitted, except as required to pull cables through conduits under paving or railroad tracks. Where cables cross, a separation of at least 3 inches shall be provided, unless each cable circuit is protected by a nonmetallic conduit sleeve at the crossing. Where single-conductor cable is installed, all 3 phases and the neutral shall be installed in the same sleeve. Bend radius of any cable shall be not less than 10 times the diameter of the cable. In no case shall cables be left under longitudinal tension. The first 6 inch layer of backfill shall be of sand. Machine compaction shall not be used within 6 inches of the cable.

3.2.3.3 Other Requirements

Where direct-burial cables cross under roads or other paving exceeding5 feet in width, such cables shall be installed in concrete-encased ducts. Where direct-burial cables cross under railroad tracks, such cables shall be installed in reinforced concrete-encased ducts. Ducts shall extend at least 1 foot beyond each edge of any paving and at least 5 feet beyond each side of any railroad tracks. Cables may be pulled into duct from a fixed reel where suitable rollers are provided in the trench. Where direct burial cable transitions to duct-enclosed cable, direct-burial cables shall be centered in duct entrances, and a waterproof nonhardening mastic compound shall be used to facilitate such centering. If paving or railroad tracks are in place where cables are to be installed, coated rigid steel conduits driven under the paving or railroad tracks may be used in lieu of concrete-encased ducts. Damage to conduit coatings shall be prevented by providing ferrous pipe jackets or by predrilling. Where cuts are made in any paving, the paving and subbase shall be restored to their original condition.

3.2.3.4 Medium-Voltage Cable Joints or Low-Voltage Cable Splices

Cable joints or splices in direct-burial cables are not permitted in runs of 1000 feet or less, nor at intervals of less than 1000 feet in longer runs, except as required for taps. Locations of cable joints or splices in shorter intervals, where required to avoid obstructions or damage to cables, shall be approved. Cable joints or splices in direct burial installations shall be installed in above-ground junction boxes or in cast metal splice boxes suitable for direct burial use. Cable joints or splices in duct banks shall be made only in manholes, handholes, or pullboxes.

3.2.3.5 Cable Markers

Markers shall be located near the ends of cable runs, at each cable joint

or splice, at approximately every 500 feet along cable runs, and at changes in direction of cable runs. In addition to markers, a 5 mil, brightly colored plastic tape not less than 3 inches in width and suitably inscribed at not more than 10 feet on centers, or other approved dig-in warning indication, shall be placed approximately 12 inches below finished grade levels of trenches.

3.2.4 Not Used3.2.5 Electric Manholes

Cables shall be routed around the interior walls and securely supported from walls on cables racks. Cable routing shall minimize cable crossover, provide access space for maintenance and installation of additional cables, and maintain cable separation in accordance with IEEE C2.

3.2.6 Not Used

3.3 CABLE JOINTS

Medium-voltage cable joints shall be made by qualified cable splicers only. Qualifications of cable splicers shall be submitted in accordance with paragraph SUBMITTALS. Shields shall be applied as required to continue the shielding system through each entire cable joint. Shields may be integrally molded parts of preformed joints. Shields shall be grounded at each joint or in accordance with manufacturer's recommended practice. Cable joints shall provide insulation and jacket equivalent to that of the associated cable. Armored cable joints shall be enclosed in compound-filled, cast-iron or alloy, splice boxes equipped with stuffing boxes and armor clamps of a suitable type and size for the cable being installed.

3.4 Not Used

3.5 DUCT LINES

3.5.1 Requirements

Numbers and sizes of ducts shall be as indicated. Duct lines shall be laid with a minimum slope of 4 inches per 100 feet. Depending on the contour of the finished grade, the high-point may be at a terminal, a manhole, a handhole, or between manholes or handholes. Short-radius manufactured 90-degree duct bends may be used only for pole or equipment risers, unless specifically indicated as acceptable. The minimum manufactured bend radius shall be 18 inches for ducts of less than 3 inch diameter, and 36 inches for ducts 3 inches or greater in diameter. Otherwise, long sweep bends having a minimum radius of 25 feet shall be used for a change of direction of more than 5 degrees, either horizontally or vertically. Both curved and straight sections may be used to form long sweep bends, but the maximum curve used shall be 30 degrees and manufactured bends shall be used. Ducts shall be provided with end bells whenever duct lines terminate in manholes or handholes.

3.5.2 Treatment

Ducts shall be kept clean of concrete, dirt, or foreign substances during construction. Field cuts requiring tapers shall be made with proper tools and match factory tapers. A coupling recommended by the duct manufacturer shall be used whenever an existing duct is connected to a duct of different material or shape. Ducts shall be stored to avoid warping and deterioration with ends sufficiently plugged to prevent entry of any water

or solid substances. Ducts shall be thoroughly cleaned before being laid. Plastic ducts shall be stored on a flat surface and protected from the direct rays of the sun.

3.5.3 Concrete Encasement

Ducts requiring concrete encasements shall comply with NFPA 70, except that electrical duct bank configurations for ducts 6 inches in diameter shall be determined by calculation and as shown on the drawings. The separation between adjacent electric power and communication ducts shall conform to IEEE C2. Duct line encasements shall be monolithic construction. Where a connection is made to a previously poured encasement, the new encasement shall be well bonded or doweled to the existing encasement. The Contractor shall submit proposed bonding method for approval in accordance with the detail drawing portion of paragraph SUBMITTALS. At any point, except railroad and airfield crossings, tops of concrete encasements shall be not less than the cover requirements listed in NFPA 70. At railroad and airfield crossings, duct lines shall be encased with concrete and reinforced as indicated to withstand specified surface loadings. Tops of concrete encasements shall be not less than 5 feet below tops of rails or airfield paving unless otherwise indicated. Where ducts are jacked under existing pavement, rigid steel conduit will be installed because of its strength. To protect the corrosion-resistant conduit coating, predrilling or installing conduit inside a larger iron pipe sleeve (jack-and-sleeve) is required. For crossings of existing railroads and airfield pavements greater than 50 feet in length, the predrilling method or the jack-and-sleeve method will be used. Separators or spacing blocks shall be made of steel, concrete, plastic, or a combination of these materials placed not farther apart than 4 feet on centers. Ducts shall be securely anchored to prevent movement during the placement of concrete and joints shall be staggered at least 6 inches vertically.

3.5.4 Nonencased Direct-Burial

Top of duct lines shall be below the frost line depth 48inches, but not less than 24 inches below finished grade and shall be installed with a minimum of 3 inches of earth around each duct, except that between adjacent electric power and communication ducts, 12 inches of earth is required. Bottoms of trenches shall be graded toward manholes or handholes and shall be smooth and free of stones, soft spots, and sharp objects. Where bottoms of trenches comprise materials other than sand, a 3 inch layer of sand shall be laid first and compacted to approximate densities of surrounding firm soil before installing ducts. Joints in adjacent tiers of duct shall be vertically staggered at least 6 inches. The first 6 inch layer of backfill cover shall be sand compacted as previously specified. The rest of the excavation shall be backfilled and compacted in3 to 6 inch layers. Duct banks may be held in alignment with earth. However, high-tiered banks shall use a wooden frame or equivalent form to hold ducts in alignment prior to backfilling.

3.5.5 Installation of Couplings

Joints in each type of duct shall be made up in accordance with the manufacturer's recommendations for the particular type of duct and coupling selected and as approved.

3.5.5.1 Not Used

3.5.5.2 Plastic Duct

Duct joints shall be made by brushing a plastic solvent cement on insides of plastic coupling fittings and on outsides of duct ends. Each duct and fitting shall then be slipped together with a quick 1/4-turn twist to set the joint tightly.

3.5.6 Duct Line Markers

Duct line markers shall be provided at the ends of long duct line stubouts or for other ducts whose locations are indeterminate because of duct curvature or terminations at completely below-grade structures. In addition to markers, a 5 mil brightly colored plastic tape, not less than 3 inches in width and suitably inscribed at not more than 10 feet on centers with a continuous metallic backing and a corrosion-resistant 1 mil metallic foil core to permit easy location of the duct line, shall be placed approximately 12 inches below finished grade levels of such lines.

3.6 MANHOLES, HANDHOLES, AND PULLBOXES

3.6.1 General

Manholes shall be constructed approximately where shown. The exact location of each manhole shall be determined after careful consideration has been given to the location of other utilities, grading, and paving. The location of each manhole shall be approved by the Contracting Officer before construction of the manhole is started. Manholes shall be the type noted on the drawings and shall be constructed in accordance with the applicable details as indicated. Top, walls, and bottom shall consist of reinforced concrete. Walls and bottom shall be of monolithic concrete construction. The Contractor may at his option utilize monolithically constructed precast-concrete manholes having the required strength and inside dimensions as required by the drawings or specifications. In paved areas, frames and covers for manhole and handhole entrances in vehicular traffic areas shall be flush with the finished surface of the paving. In unpaved areas, the top of manhole covers shall be approximately 1/2 inch above the finished grade. Where existing grades that are higher than finished grades are encountered, concrete assemblies designed for the purpose shall be installed to elevate temporarily the manhole cover to existing grade level. All duct lines entering manholes must be installed on compact soil or otherwise supported when entering a manhole to prevent shear stress on the duct at the point of entrance to the manhole. Duct lines entering cast-in-place concrete manholes shall be cast in-place with the manhole. Duct lines entering precast concrete manholes through a precast knockout penetration shall be grouted tight with a portland cement mortar. PVC duct lines entering precast manholes through a PVC endbell shall be solvent welded to the endbell. A cast metal grille-type sump frame and cover shall be installed over the manhole sump. A cable-pulling iron shall be installed in the wall opposite each duct line entrance.

3.6.2 Electric Manholes

Cables shall be securely supported from walls by hot-dip galvanized cable racks with a plastic coating over the galvanizing and equipped with adjustable hooks and insulators. The number of cable racks indicated shall be installed in each manhole and not less than 2 spare hooks shall be installed on each cable rack. Insulators shall be made of high-glazed porcelain. Insulators will not be required on spare hooks.

3.6.3 Communications Manholes

The number of hot-dip galvanized cable racks with a plastic coating over the galvanizing indicated shall be installed in each telephone manhole. Each cable rack shall be provided with 2 cable hooks. Cables for the telephone and communication systems will be installed by others.

3.6.4 Handholes

Handholes shall be located approximately as shown. Handholes shall be of the type noted on the drawings and shall be constructed in accordance with the details shown.

3.6.5 Pullboxes

Pullbox tops shall be flush with sidewalks or curbs or placed 1/2 inchabove surrounding grades when remote from curbed roadways or sidewalks. Covers shall be marked "Low-Voltage" and provided with 2 lifting eyes and 2 hold-down bolts. Each box shall have a suitable opening for a ground rod. Conduit, cable, ground rod entrances, and unused openings shall be sealed with mortar.

3.6.6 Ground Rods

A ground rod shall be installed at the manholes, handholes and pullboxes. Ground rods shall be driven into the earth before the manhole floor is poured so that approximately 4 inches of the ground rod will extend above the manhole floor. When precast concrete manholes are used, the top of the ground rod may be below the manhole floor and a No. 1/0 AWG ground conductor brought into the manhole through a watertight sleeve in the manhole wall.

3.7 PAD-MOUNTED EQUIPMENT INSTALLATION

Pad-mounted equipment, shall be installed on concrete pads in accordance with the manufacturer's published, standard installation drawings and procedures, except that they shall be modified to meet the requirements of this document. Units shall be installed so that they do not damage equipment or scratch painted or coated surfaces. After installation, surfaces shall be inspected and scratches touched up with a paint or coating provided by the manufacturer especially for this purpose. Three-phase transformers shall be installed with A-B-C phase sequence. Primary taps shall be set as required to maintain nomonal secondry voltage .

3.7.1 Concrete Pads

3.7.1.1 Construction

Concrete pads for pad-mounted electrical equipment shall be poured-in-place. Pads shall be constructed as indicated, except that exact pad dimensions and mounting details are equipment specific and are the responsibility of the Contractor. Tops of concrete pads shall be level and shall project 4 inches above finished grade and sloped to drain. Edges of concrete pads shall have 3/4 inch chamfer. Conduits for primary, secondary, and grounding conductors shall be set in place prior to placement of concrete pads. Where grounding electrode conductors are installed through concrete pads, PVC conduit sleeves shall be installed through the concrete to provide physical protection. To facilitate cable installation and termination, the concrete pad shall be provided with a rectangular hole below the primary and secondary compartments, sized in

accordance with the manufacturer's recommended dimensions. Upon completion of equipment installation the rectangular hole shall be filled with masonry grout.

3.7.1.2 Concrete and Reinforcement

Concrete work shall have minimum 3000 psi compressive strength and comform to the requirements of Section 03300 CAST-IN-PLACE STRUCTURAL CONCRETE. Concrete pad reinforcement shall be in accordance with Section 03200 CONCRETE REINFORCEMENT.

3.7.1.3 Sealing

When the installation is complete, the Contractor shall seal all conduit and other entries into the equipment enclosure with an approved sealing compound. Seals shall be of sufficient strength and durability to protect all energized live parts of the equipment from rodents, insects, or other foreign matter.

3.7.2 Padlocks

Padlocks shall be provided for pad-mounted equipment and for each fence gate. Padlocks shall be keyed as directed by the Contracting Officer. Padlocks shall comply with ASTM F 883, Type and Size .

3.7.3 Not Used
3.8 Not Used

3.9 CONNECTIONS TO BUILDINGS

Cables shall be extended into the various buildings as indicated, and shall be connected to the first applicable termination point in each building. Interfacing with building interior conduit systems shall be at conduit stubouts terminating 5 feet outside of a building and 2 feet below finished grade as specified and provided under Section 16415 ELECTRICAL WORK, INTERIOR. After installation of cables, conduits shall be sealed with caulking compound to prevent entrance of moisture or gases into buildings.

3.10 GROUNDING

A ground ring consisting of the indicated configuration of bare copper conductors and driven ground rods shall be installed around pad-mounted equipment as shown. Equipment frames of metal-enclosed equipment, and other noncurrent-carrying metal parts, such as cable shields, cable sheaths and armor, and metallic conduit shall be grounded. At least 2 connections shall be provided from a transformer, and pad mounted switchgear to the ground ring. Metallic frames and covers of handholes and pull boxes shall be grounded by use of a braided, copper ground strap with equivalent ampacity of No. 6 AWG.

3.10.1 Grounding Electrodes

Grounding electrodes shall be installed as shown on the drawings and as follows:

a. Driven rod electrodes - Unless otherwise indicated, ground rods shall be driven into the earth until the tops of the rods are approximately 1 foot below finished grade.

b. Ground ring - A ground ring shall be installed as shown consisting of bare copper conductors installed 18 inches, plus or minus 3 inches, below finished top of soil grade. Ground ring conductors shall be sized as shown.

c. Additional electrodes - When the required ground resistance is not met, additional electrodes shall be provided interconnected with grounding conductors as indicated to achieve the specified ground resistance. The additional electrodes will be installed as indicated, 5/8 inch diameter, 10 feet long, driven perpendicular to grade. If the resultant resistance exceeds 25 ohms measured not less than 48 hours after rainfall, the Contracting Officer shall be notified immediately.

3.10.2 Grounding and Bonding Connections

Connections above grade shall be made by the fusion-welding process or with bolted solderless connectors, in compliance with UL 467, and those below grade shall be made by a fusion-welding process. Where grounding conductors are connected to aluminum-composition conductors, specially treated or lined copper-to-aluminum connectors suitable for this purpose shall be used.

3.10.3 Grounding and Bonding Conductors

Grounding and bonding conductors include conductors used to bond transformer enclosures and equipment frames to the grounding electrode system. Grounding and bonding conductors shall be sized as shown, and located to provide maximum physical protection. Bends greater than 45 degrees in ground conductors are not permitted. Routing of ground conductors through concrete shall be avoided. When concrete penetration is necessary, nonmetallic conduit shall be cast flush with the points of concrete entrance and exit so as to provide an opening for the ground conductor, and the opening shall be sealed with a suitable compound after installation.

3.10.4 Surge Arrester Grounding

Surge arresters and neutrals shall be bonded directly to the transformer enclosure and then to the grounding electrode system with a bare copper conductor, sized as shown. Lead lengths shall be kept as short as practicable with no kinks or sharp bends.

3.10.5 Manhole, Handhole, or Concrete Pullbox Grounding

Ground rods installed in manholes, handholes, or concrete pullboxes shall be connected to cable racks, cable-pulling irons, the cable shielding, metallic sheath, and armor at each cable joint or splice by means of a No. 4 AWG braided tinned copper wire. Connections to metallic cable sheaths shall be by means of tinned terminals soldered to ground wires and to cable sheaths. Care shall be taken in soldering not to damage metallic cable sheaths or shields. Ground rods shall be protected with a double wrapping of pressure-sensitive plastic tape for a distance of 2 inches above and 6 inches below concrete penetrations. Grounding electrode conductors shall be neatly and firmly attached to manhole or handhole walls and the amount of exposed bare wire shall be held to a minimum.

3.10.6 Metal Splice Case Grounding

Metal splice cases for medium-voltage direct-burial cable shall be grounded by connection to a driven ground rod located within 2 feet of each splice box using a grounding electrode conductor having a current-carrying capacity of at least 20 percent of the individual phase conductors in the associated splice box, but not less than No. 6 AWG.

3.11 FIELD TESTING

3.11.1 General

Field testing shall be performed in the presence of the Contracting Officer. The Contractor shall notify the Contracting Officer 14 days prior to conducting tests. The Contractor shall furnish all materials, labor, and equipment necessary to conduct field tests. The Contractor shall perform all tests and inspections recommended by the manufacturer unless specifically waived by the Contracting Officer. The Contractor shall maintain a written record of all tests which includes date, test performed, personnel involved, devices tested, serial number and name of test equipment, and test results. Field test reports shall be signed and dated by the Contractor.

3.11.2 Safety

The Contractor shall provide and use safety devices such as rubber gloves, protective barriers, and danger signs to protect and warn personnel in the test vicinity. The Contractor shall replace any devices or equipment which are damaged due to improper test procedures or handling.

3.11.3 Ground-Resistance Tests

The resistance of each grounding electrode system shall be measured using the fall-of-potential method defined in IEEE Std 81. Ground resistance measurements shall be made before the electrical distribution system is energized and shall be made in normally dry conditions not less than 48 hours after the last rainfall. Resistance measurements of separate grounding electrode systems shall be made before the systems are bonded together below grade. The combined resistance of separate systems may be used to meet the required resistance, but the specified number of electrodes must still be provided.

a. Single rod electrode - 25 ohms.

b.. Ground ring - 10 ohms.

3.11.4 Not Used

3.11.5 Medium-Voltage Cable Test

After installation and before the operating test or connection to an existing system, the medium-voltage cable system shall be given a high potential test. Direct-current voltage shall be applied on each phase conductor of the system by connecting conductors as one terminal and connecting grounds or metallic shieldings or sheaths of the cable as the other terminal for each test. Prior to making the test, the cables shall be isolated by opening applicable protective devices and disconnecting equipment. The test shall be conducted with all splices, connectors, and terminations in place. The method, voltage, length of time, and other

characteristics of the test for initial installation shall be in accordance with NEMA WC 7 or NEMA WC 8 for the particular type of cable installed, except that 28 kV and 35 kV insulation test voltages shall be in accordance with either AEIC CS5 or AEIC CS6 as applicable, and shall not exceed the recommendations of IEEE Std 404 for cable joints and IEEE Std 48 for cable terminations unless the cable and accessory manufacturers indicate higher voltages are acceptable for testing. Should any cable fail due to a weakness of conductor insulation or due to defects or injuries incidental to the installation or because of improper installation of cable, cable joints, terminations, or other connections, the Contractor shall make necessary repairs or replace cables as directed. Repaired or replaced cables shall be retested.

3.11.6 Low-Voltage Cable Test

Low-voltage cable, complete with splices, shall be tested for insulation resistance after the cables are installed, in their final configuration, ready for connection to the equipment, and prior to energization. The test voltage shall be 500 volts dc, applied for one minute between each conductor and ground and between all possible combinations conductors in the same trench, duct, or cable, with all other conductors in the same trench, duct, or conduit. The minimum value of insulation shall be:

R in megohms = (rated voltage in kV + 1) x 1000/(length of cable in feet

Each cable failing this test shall be repaired or replaced. The repaired cable shall be retested until failures have been eliminated.

3.11.7 Liquid-Filled Transformer Tests

The following field tests shall be performed on all liquid-filled transformers. Pass-fail criteria shall be in accordance with transformer manufacturer's specifications.

a. Insulation resistance test phase-to-ground.

b. Turns ratio test.

c. Correct phase sequence.

d. Correct operation of tap changer.

3.11.8 Dry-Type Transformer Tests

The following field tests shall be performed on dry-type transformer 45 kVA and above]. Pass-fail criteria shall be in accordance with the transformer manufacturer's specifications.

a. Insulation resistance test phase-to-ground.

b. Turns ratio test.

3.11.9 Circuit Breaker Tests

The following field tests shall be performed on the main switchboard breaker and all feeder circuit breakers in the main switchboard. Pass-fail criteria shall be in accordance with the circuit breaker manufacturer's specifications.

a. Insulation resistance test phase-to-phase.

b. Insulation resistance test phase-to-ground.

c. Closed breaker contact resistance test.

d. High-potential test.

e. Manual and electrical operation of the breaker.

3.11.10 Not Used

3.11.11 NOt Used

3.11.12 Pre-Energization Services

Calibration, testing, adjustment, and placing into service of the installation shall be accomplished by a manufacturer's product field service engineer or independent testing company with a minimum of 2 years of current product experience. The following services shall be performed on the equipment listed below. These services shall be performed subsequent to testing but prior to the initial energization. The equipment shall be inspected to ensure that installation is in compliance with the recommendations of the manufacturer and as shown on the detail drawings. Terminations of conductors at major equipment shall be inspected to ensure the adequacy of connections. Bare and insulated conductors between such terminations shall be inspected to detect possible damage during installation. If factory tests were not performed on completed assemblies, tests shall be performed after the installation of completed assemblies. Components shall be inspected for damage caused during installation or shipment to ensure packaging materials have been removed. Components capable of being both manually and electrically operated shall be operated manually prior to the first electrical operation. Components capable of being calibrated, adjusted, and tested shall be calibrated, adjusted, and tested in accordance with the instructions of the equipment manufacturer. Items for which such services shall be provided, but are not limited to, are the following:

a. Pad-mounted transformers

b. Panelboards

c. Switchboards

d. Switches

3.11.13 Operating Tests

After the installation is completed, and at such times as the Contracting Officer may direct, the Contractor shall conduct operating tests for approval. The equipment shall be demonstrated to operate in accordance with the requirements herein. An operating test report shall be submitted in accordance with paragraph SUBMITTALS.

3.12 MANUFACTURER'S FIELD SERVICE

3.12.1 Onsite Training

The Contractor shall conduct a training course for the operating staff as designated by the Contracting Officer. The training period shall consist of a total of 8 hours of normal working time and shall start after the system is functionally completed but prior to final acceptance tests. The course instruction shall cover pertinent points involved in operating, starting, stopping, and servicing the equipment, as well as all major elements of the operation and maintenance manuals.

3.12.2 Installation Engineer

After delivery of the equipment, the Contractor shall furnish one or more field engineers, regularly employed by the equipment manufacturer to supervise the installation of the equipment, assist in the performance of the onsite tests, initial operation, and instruct personnel as to the operational and maintenance features of the equipment.

3.13 ACCEPTANCE

Final acceptance of the facility will not be given until the Contractor has successfully completed all tests and after all defects in installation, material or operation have been corrected.

-- End of Section --

SECTION TABLE OF CONTENTS

DIVISION 16 - ELECTRICAL

SECTION 16403

SWITCHBOARDS AND PANELBOARDS

08/95

PART 1 GENERAL

1.1 REFERENCES
1.2 SYSTEM DESCRIPTION
1.2.1 Rules
1.2.2 Coordination
1.2.3 Standard Products
1.2.4 Nameplates
1.3 SUBMITTALS
1.4 DELIVERY, STORAGE, AND HANDLING
1.5 MAINTENANCE
1.5.1 Accessories and Tools

PART 2 PRODUCTS

2.1 CONNECTIONS
2.2 MOLDED CASE CIRCUIT BREAKERS
2.2.1 Trip Units
2.2.2 Not Used
2.2.3 120/208-Volt AC Circuits
2.2.4 Not Used
2.3 WIRING
2.4 TERMINAL BLOCKS
2.4.1 Types of Terminal Blocks
2.4.1.1 Short-Circuiting Type
2.4.1.2 Load Type
2.4.2 Marking Strips
2.5 Not Used
2.6 Not Used
2.7 SWITCHBOARDS
2.7.1 Enclosure
2.7.2 Bus
2.7.3 Grounding Bus
2.7.4 Components
2.8 PANELBOARDS
2.8.1 Enclosure
2.8.2 Buses
2.8.3 Components
2.9 PAINTING
2.10 FACTORY TESTS
2.10.1 Not Used
2.10.2 Switchboards Tests
2.10.2.1 Production Tests
2.10.2.2 Short Circuit Tests
2.10.3 Panelboards Tests

PART 3 EXECUTION (Not Applicable)

-- End of Section Table of Contents --

SECTION 16403

SWITCHBOARDS AND PANELBOARDS
08/95

PART 1 GENERAL

1.1 REFERENCES

The publications listed below form a part of this specification to the extent referenced. The publications are referred to in the text by basic designation only.

AMERICAN SOCIETY FOR TESTING AND MATERIALS (ASTM)

ASTM B 187	(1994) Copper Bar, Bus Bar, Rod and Shapes
ASTM B 317	(1992a) Aluminum-Alloy Extruded Bar, Rod, Tube, Pipe, and Structural Shapes for Electrical Purposes (Bus Conductor)

ASME INTERNATIONAL (ASME)

ASME B1.1	(1989) Unified Inch Screw Threads (UN and UNR Thread Form)
ASME B1.20.1	(1983; R 1992) Pipe Threads, General Purpose (Inch)

NATIONAL ELECTRICAL MANUFACTURERS ASSOCIATION (NEMA)

NEMA AB 1	(1993) Molded Case Circuit Breakers and Molded Case Switches
NEMA ICS 1	(1993) Industrial Control and Systems
NEMA PB 1	(1990) Panelboards
NEMA PB 2	(1989) Deadfront Distribution Switchboards

NATIONAL FIRE PROTECTION ASSOCIATION (NFPA)

NFPA 70	(1993) National Electrical Code

UNDERWRITERS LABORATORIES (UL)

UL 44	(1991; Rev thru Jan 1995) Rubber-Insulated Wires and Cables
UL 50	(1992) Enclosures for Electrical Equipment
UL 67	(1993; Rev thru May 1994) Panelboards
UL 489	(1991; Rev thru Dec 1994) Molded Case Circuit Breakers and Circuit Breaker Enclosures

UL 891	(1994; Rev thru Jan 1995) Dead-Front Switchboards
UL 1063	(1993; Rev thru Oct 1994) Machine-Tool Wires and Cables

1.2 SYSTEM DESCRIPTION

These specifications include the design, fabrication, assembly, wiring, testing, and delivery of the items of equipment and accessories and spare parts listed in the Schedule and shown on the drawings.

1.2.1 Rules

The equipment shall conform to the requirements of NFPA 70 unless more stringent requirements are indicated herein or shown. NEMA rated and UL listed equipment has been specified when available. Equipment must meet NEMA and UL construction and rating requirements as specified. No equivalent will be acceptable. The contractor shall immediately notify the Contracting Officer of any requirements of the specifications or contractor proposed materials or assemblies that do not comply with UL or NEMA. International Electrotechnical Commission (IEC) rated equipment will not be considered an acceptable alternative to specified NEMA ratings.

1.2.2 Coordination

The general arrangement of the motor control centers, switchboards and panelboards is shown on the contract drawings. Any modifications of the equipment arrangement or device requirements as shown on the drawings shall be subject to the approval of the Contracting Officer. If any conflicts occur necessitating departures from the drawings, details of and reasons for departures shall be submitted and approved prior to implementing any change. All equipment shall be completely assembled at the factory. The motor control centers and switchboards may be disassembled into sections, if necessary, for convenience of handling, shipping, and installation.

1.2.3 Standard Products

Material and equipment shall be standard products of a manufacturer regularly engaged in their manufacture and shall essentially duplicate items that have been in satisfactory use for at least 2 years prior to bid opening. All materials shall conform to the requirements of these specifications. Materials shall be of high quality, free from defects and imperfections, of recent manufacture, and of the classification and grades designated. All materials, supplies, and articles not manufactured by the Contractor shall be the products of other recognized reputable manufacturers. If the Contractor desires for any reason to deviate from the standards designated in these specifications, he shall, after award, submit a statement of the exact nature of the deviation, and shall submit, for the approval of the Contracting Officer, complete specifications for the materials which he proposes to use.

1.2.4 Nameplates

Nameplates shall be made of laminated sheet plastic or of anodized aluminum approximately 4 millimeters (1/8 inch) thick, engraved to provide white letters on a black background. The nameplates shall be fastened to the panels in proper positions with anodized round-head screws. Lettering shall be minimum 15 millimeters (1/2 inch) high. Nameplate designations

shall be in accordance with lists on the drawings, and as a minimum shall be provided for the following equipment:

a. Switchboards

b. Group-mounted circuit breakers in Switchboard

c. Panelboards

d. Individually-mounted circuit breakers in Panelboard

Equipment of the withdrawal type shall be provided with nameplates mounted on the removable equipment in locations visible when the equipment is in place.

1.3 SUBMITTALS

Government approval is required for submittals with a "GA" designation. Equipment, materials, and articles installed or used without such approval shall be at the risk of subsequent rejection. Submittals having an "FIO" designation are for information only. The following shall be submitted in accordance with the Contract Data Requirements List, DD Form 1423:

SD-01 Data

Equipment; GA.

The Contractor shall within 30 calendar days after date of award submit for approval six (6) copies of such descriptive cuts and information as are required to demonstrate fully that all parts of the equipment will conform to the requirements and intent of the specifications. Data shall include descriptive data showing typical construction of the types of equipment proposed, including the manufacturer's name, type of molded case circuit breakers or motor circuit protectors, performance capacities and other information pertaining to the equipment. Six (6) sets of characteristic curves of the individual breaker trip element shall be submitted.

SD-04 Drawings

Outline Drawings; GA.

The Contractor shall, within 30 calendar days after date of award, submit for the approval of the Contracting Officer six (6) copies of outline drawings of all equipment to be furnished under this contract, together with weights and overall dimensions. Drawings shall show the general arrangement and overall dimensions of the motor control centers, switchboards, and panelboards. These drawings shall show space requirements, details of any floor supports to be embedded in concrete and provisions for conduits for external cables.

Switchboards; GA1. Panelboards; GA1.

The Contractor shall, within 30 calendar days after date of award, submit for the approval of the Contracting Officer six (6) copies of electrical equipment drawings. A single-line diagram, equipment list and nameplate schedule shall be provided for each switchboard and panelboard.

SD-08 Statements

Factory Tests; FIO.

The Contractor shall submit, within a minimum of 14 days prior to the proposed date of tests, six (6) copies of manufacturer's routine factory test procedures and production line tests for all motor control centers and switchboards.

SD-09 Reports

Factory Tests; FIO.

The Contractor shall submit six (6) complete reproducible copies of the factory inspection results and six (6) complete reproducible copies of the factory test results in booklet form, including all plotted data curves, all test conditions, a listing of test equipment complete with calibration certifications, and all measurements taken. Report shall be signed and dated by the Contractor's and Contracting Officer's Representatives.

SD-13 Certificates

1.4 DELIVERY, STORAGE, AND HANDLING

The equipment shall be shipped as completely assembled and wired as feasible so as to require a minimum of installation work. Each shipping section shall be properly match marked to facilitate reassembly, and shall be provided with removable lifting channels with eye bolts for attachment of crane slings to facilitate lifting and handling. Any relay or other device which cannot withstand the hazards of shipment when mounted in place on the equipment shall be carefully packed and shipped separately. These devices shall be marked with the number of the panel which they are to be mounted on and fully identified. All finished painted surfaces and metal work shall be wrapped suitably or otherwise protected from damage during shipment. All parts shall be prepared for shipment so that slings for handling may be attached readily while the parts are in a railway car or transport truck. Sections of equipment crated for shipment shall be of such size, including crates, that they will pass through a 1-meter by 2-meter hatch opening and a 2-meter by 2-meter wall opening. All spare parts and accessories shall be carefully packaged and clearly marked.

1.5 MAINTENANCE

1.5.1 Accessories and Tools

A complete set of accessories and special tools unique to equipment provided and required for erecting, handling, dismantling, testing and maintaining the apparatus shall be furnished by the Contractor.

PART 2 PRODUCTS

2.1 CONNECTIONS

All bolts, studs, machine screws, nuts, and tapped holes shall be in accordance with ASME B1.1. The sizes and threads of all conduit and fittings, tubing and fittings, and connecting equipment shall be in accordance with ASME B1.20.1. All ferrous fasteners shall have rust-resistant finish and all bolts and screws shall be equipped with approved locking devices. Manufacturer's standard threads and construction

may be used on small items which, in the opinion of the Contracting Officer, are integrally replaceable, except that threads for external connections to these items shall meet the above requirements.

2.2 MOLDED CASE CIRCUIT BREAKERS

Molded case circuit breakers shall conform to the applicable requirements of NEMA AB 1 and UL 489. The circuit breakers shall be manually-operated, shall be quick-make, quick-break, common trip type, and shall be of automatic-trip type unless otherwise specified or indicated on the drawings. All poles of each breaker shall be operated simultaneously by means of a common handle. The operating handles shall clearly indicate whether the breakers are in "On," "Off," or "Tripped" position and shall have provisions for padlocking in the "Off" position. Personnel safety line terminal shields shall be provided for each breaker. The circuit breakers shall be products of only one manufacturer, and shall be interchangeable when of the same frame size.

2.2.1 Trip Units

Except as otherwise noted, the circuit breakers, of frame sizes and the trip unit ratings as shown on the drawings, shall be provided with combination thermal and instantaneous magnetic or solid state trip units. The Government reserves the right to change the indicated trip ratings, within frame limits, of the trip devices at the time the shop drawings are submitted for approval. The breaker trip units shall be interchangeable and the instantaneous magnetic trip units shall be adjustable on frame sizes larger than 150 amperes. Nonadjustable instantaneous magnetic trip units shall be set at approximately 10 times the continuous current ratings of the circuit breakers. Solid state trip units, where indicated, shall also have adjustable, long time pick-up and delay,short time pick-up and delay.

2.2.2 Not Used

2.2.3 120/208-Volt AC Circuits

Circuit breakers for 120-volt ac circuits shall be rated not less than 120/208 or 240 volts ac, and shall have a UL listed minimum interrupting capacity of 10,000 symmetrical amperes.

2.2.4 Not Used

2.3 WIRING

All control wire shall be stranded tinned copper switchboard wire with 600-volt flame-retardant insulation Type SIS meeting UL 44 or Type MTW meeting UL 1063, and shall pass the VW-1 flame tests included in those standards. Hinge wire shall have Class K stranding. Current transformer secondary leads shall be not smaller than No. 10 AWG. The minimum size of control wire shall be No. 14 AWG. Power wiring for 480-volt circuits and below shall be of the same type as control wiring and the minimum size shall be No. 12 AWG. Special attention shall be given to wiring and terminal arrangement on the terminal blocks to permit the individual conductors of each external cable to be terminated on adjacent terminal points.

2.4 TERMINAL BLOCKS

Control circuit terminal blocks for control wiring shall be molded or fabricated type with barriers, rated not less than 600 volts. The terminals shall be removable binding, fillister or washer head screw type, or of the stud type with contact and locking nuts. The terminals shall be not less than No. 10 in size and shall have sufficient length and space for connecting at least two indented terminals for 10 AWG conductors to each terminal. The terminal arrangement shall be subject to the approval of the Contracting Officer and not less than four (4) spare terminals or 10 percent, whichever is greater, shall be provided on each block or group of blocks. Modular, pull apart, terminal blocks will be acceptable provided they are of the channel or rail-mounted type. The Contractor shall submit data showing that the proposed alternate will accommodate the specified number of wires, are of adequate current-carrying capacity, and are constructed to assure positive contact between current-carrying parts.

2.4.1 Types of Terminal Blocks

2.4.1.1 Short-Circuiting Type

Short-circuiting type terminal blocks shall be furnished for all current transformer secondary leads and shall have provision for shorting together all leads from each current transformer without first opening any circuit. Terminal blocks shall meet the requirements of paragraph CONTROL CIRCUIT TERMINAL BLOCKS above.

2.4.1.2 Load Type

Load terminal blocks rated not less than 600 volts and of adequate capacity shall be provided for the conductors for NEMA Size 3 and smaller motor controllers and for other power circuits except those for feeder tap units. The terminals shall be of either the stud type with contact nuts and locking nuts or of the removable screw type, having length and space for at least two indented terminals of the size required on the conductors to be terminated. For conductors rated more than 50 amperes, screws shall have hexagonal heads. Conducting parts between connected terminals shall have adequate contact surface and cross-section to operate without overheating. Each connected terminal shall have the circuit designation or wire number placed on or near the terminal in permanent contrasting color.

2.4.2 Marking Strips

White or other light-colored plastic marking strips, fastened by screws to each terminal block, shall be provided for wire designations. The wire numbers shall be made with permanent ink. The marking strips shall be reversible to permit marking both sides, or two marking strips shall be furnished with each block. Marking strips shall accommodate the two sets of wire numbers. Each device to which a connection is made shall be assigned a device designation in accordance with NEMA ICS 1 and each device terminal to which a connection is made shall be marked with a distinct terminal marking corresponding to the wire designation used on the Contractor's schematic and connection diagrams. The wire (terminal point) designations used on the Contractor's wiring diagrams and printed on terminal block marking strips may be according to the Contractor's standard practice; however, additional wire and cable designations for identification of remote (external) circuits shall be provided for the Government's wire designations. Prints of drawings submitted for approval will be so marked and returned to the Contractor for addition of the designations to the terminal strips and tracings, along with any rearrangement of points required.

2.5 Not Used

2.6 Not Used

2.7 SWITCHBOARDS

The switchboards shall be dead-front switchboards conforming to NEMA PB 2 and labeled under UL 891. The switchboards shall be completely enclosed self-supporting metal structures with the required number of vertical panel sections, buses, solid-state trip main circuit breaker,molded-case feeder circuit breakers, and other devices as shown on the drawings. Switchboards shall be fully rated for a short-circuit current of 42,000 symmetrical amperes RMS AC.

2.7.1 Enclosure

Each switchboard enclosure shall be NEMA type 1, built with selected smooth sheet steel panels of not less than 1.9 millimeters (No. 14 gage). Exposed panels on the front and ends shall have bent angle or channel edges with all corner seams welded and ground smooth. The front outside surfaces shall not be drilled or welded for the purpose of attaching wires or mounting devices if such holes or fastenings will be visible from the front. The front panels shall be made in sections flanged on four sides and attached to the framework by screws and arranged for ready removal for inspection or maintenance. Ventilating openings shall be provided as required and shall preferably be of the grille type. All ventilating openings shall be provided with corrosion-resistant insect-proof screens on the inside. Switchboards shall be mounted as shown on the drawings and mounting materials shall be furnished by the Contractor as indicated. All interior and exterior steel parts shall be treated to inhibit corrosion and shall be painted as specified in paragraph PAINTING.

2.7.2 Bus

All buses shall be of copper or aluminum and all bolted splices and connections between buses and for extensions or taps for equipment shall be tin or silver-plated throughout. Copper or aluminum bars and shapes for bus conductors shall conform to the applicable requirements of ASTM B 187 , and ASTM B 317. All splices for field assembly shall be bolted with at least two bolts and shall employ the use of "Belleville" washers in the connection. Horizontal and vertical power buses have minimum current ratings as shown on the drawings. The buses shall be insulated for not less than 600 volts. Shop splices and tap connections shall be brazed, pressure-welded or bolted. All splices for field assembly shall be bolted. The buses shall be mounted on insulating supports of wet process porcelain, glass polyester, or suitable molded material, and shall be braced to withstand not less than 65,000 symmetrical amperes ac.

2.7.3 Grounding Bus

A copper or aluminum ground bus, rated not less than 300 amps, extending the entire length of the assembled structure, shall be mounted near the bottom of enclosure. A full clamp-type solderless copper or copper alloy lug for No. 2/0 AWG stranded copper cable shall be provided at each end of the bus for connection to the station grounding system.

2.7.4 Components

Each switchboard shall be equipped with solid-state trip main circuit breaker, molded-case feeder circuit breakers conforming to paragraph MOLDED CASE CIRCUIT BREAKERS and with frame sizes, trip ratings, and terminal connectors for attachment of outgoing power cables as shown on the drawings. The circuit breakers shall be individually stationary mounted, as shown on the drawings, and shall be operable and removable from the front. Where shown on the drawings, circuit breakers shall be enclosed in individual compartments. The group-mounted circuit breakers shall be provided complete with bus work in an integrated assembly on the switchboard and shall conform to the applicable requirements of paragraph PANELBOARDS.

2.8 PANELBOARDS

Panelboards shall consist of assemblies of molded-case circuit breakers with buses and terminal lugs for the control and protection of branch circuits to motors, heating devices and other equipment operating at 240 volts ac or less. Panelboards shall be UL 67 labeled. "Loadcenter" type panels are not acceptable. Panelboards shall be designed for installation in surface-mounted or flush-mounted cabinets accessible from the front only, as shown on the drawings. Panelboards shall be fully rated for a short-circuit current of 10,000 symmetrical amperes RMS ac.

2.8.1 Enclosure

Enclosures shall meet the requirements of UL 50. All cabinets shall be fabricated from sheet steel of not less than 3.5 millimeters (No. 10 gage) if flush-mounted or mounted outdoors, and not less than 2.7 millimeters (No. 12 gage) if surface-mounted indoors, with full seam-welded box ends. Cabinets mounted outdoors or flush-mounted shall be hot-dipped galvanized after fabrication. Cabinets shall be painted in accordance with paragraph PAINTING. Outdoor cabinets shall be of NEMA 3R raintight. Front edges of cabinets shall be form-flanged or fitted with structural shapes welded or riveted to the sheet steel, for supporting the panelboard front. All cabinets shall be so fabricated that no part of any surface on the finished cabinet shall deviate from a true plane by more than 3 millimeters (1/8 inch). Holes shall be provided in the back of indoor surface-mounted cabinets, with outside spacers and inside stiffeners, for mounting the cabinets with a 15 millimeter (1/2 inch) clear space between the back of the cabinet and the wall surface. Flush doors shall be mounted on hinges that expose only the hinge roll to view when the door is closed. Each door shall be fitted with a combined catch and lock, except that doors over 600 millimeters (24 inches) long shall be provided with a three-point latch having a knob with a T-handle, and a cylinder lock. Two keys shall be provided with each lock, and all locks shall be keyed alike. Finished-head cap screws shall be provided for mounting the panelboard fronts on the cabinets. Enclosure shall have nameplates in accordance with paragraph NAMEPLATES. Directory holders, containing a neatly typed or printed directory under a transparent cover, shall be provided on the inside of panelboard doors.

2.8.2 Buses

All panelboards shall be of the dead-front type with buses and circuit breakers mounted on a plate or base for installation as a unit in a cabinet. All buses shall be of copper or aluminum and shall be tin or silver-plated throughout. Copper or aluminum bars and shapes for bus conductors shall conform to the applicable requirements of ASTM B 187, and ASTM B 317. The sizes of buses and the details of panelboard construction

shall meet or exceed the requirements of NEMA PB 1. Suitable provisions shall be made for mounting the bus within panelboards and adjusting their positions in the cabinets. Terminal lugs required to accommodate the conductor sizes shown on the drawing, shall be provided for all branch circuits larger than No. 10 AWG. A grounding lug suitable for 1/0 AWG wire shall be provided for each panelboard.

2.8.3 Components

Each branch circuit, and the main buses where so specified or shown on the drawings, shall be equipped with molded-case circuit breakers having overcurrent trip ratings as shown on the drawings. The circuit breakers shall be of a type designed for bolted connection to buses in a panelboard assembly, and shall meet the requirements of paragraph MOLDED CASE CIRCUIT BREAKERS. Circuit breakers of the same frame size and rating shall be interchangeable.

2.9 PAINTING

Interior and exterior steel surfaces of equipment enclosures shall be thoroughly cleaned and then receive a rust-inhibitive phosphatizing or equivalent treatment prior to painting. Exterior surfaces shall be free from holes, seams, dents, weld marks, loose scale or other imperfections. Interior surfaces shall receive not less than one coat of corrosion-resisting paint in accordance with the manufacturer's standard practice. Exterior surfaces shall be primed, filled where necessary, and given not less than two coats baked enamel with semigloss finish. Equipment located indoors shall be ANSI Light Gray. All touch-up work shall be done with manufacturer's coatings as supplied under paragraph SPARE PARTS.

2.10 FACTORY TESTS

Each item of equipment supplied under this contract shall be given the manufacturer's routine factory tests and tests as specified below, to insure successful operation of all parts of the assemblies. All tests required herein shall be witnessed by the Contracting Officer unless waived in writing, and no equipment shall be shipped until it has been approved for shipment by the Contracting Officer. The Contractor shall notify the Contracting Officer a minimum of 14 days prior to the proposed date of the tests so that arrangements can be made for the Contracting Officer to be present at the tests. The factory test equipment and the test methods used shall conform to the applicable NEMA Standards, and shall be subject to the approval of the Contracting Officer. Reports of all witnessed tests shall be signed by witnessing representatives of the Contractor and Contracting Officer. The cost of performing all tests shall be borne by the Contractor and shall be included in the prices bid in the schedule for equipment.

2.10.1 Not Used

2.10.2 Switchboards Tests

2.10.2.1 Production Tests

Each switchboard shall be completely assembled and given applicable production tests for assembled switchgear as specified in NEMA PB 2.

2.10.2.2 Short Circuit Tests

If the unit is not UL labeled for the specified short circuit, the contractor may submit design tests demonstrating that satisfactory short-circuit tests have been made on a switchboard of similar type of construction and of the same short-circuit rating as the switchboards specified to be furnished under these specifications.

2.10.3 Panelboards Tests

Each panelboard shall be assembled with cabinet and front to the extent necessary to check the fit and provisions for installing all parts in the field. Each panelboard shall be given a dielectric test in accordance with NEMA PB 1. All circuit breakers shall be operated to check mechanical adjustments. All doors and locks shall be checked for door clearances and fits and the performance of lock and latches.

PART 3 EXECUTION (Not Applicable)

-- End of Section --

SECTION TABLE OF CONTENTS

DIVISION 16 - ELECTRICAL

SECTION 16415

ELECTRICAL WORK, INTERIOR

08/96

PART 1 GENERAL

1.1 REFERENCES
1.2 GENERAL
1.2.1 Rules
1.2.2 Coordination
1.2.3 Special Environments
1.2.3.1 Weatherproof Locations
1.2.3.2 Not Used
1.2.3.3 Ducts, Plenums and Other Air-Handling Spaces
1.2.4 Standard Products
1.2.5 NAMEPLATES
1.2.5.1 Identification Nameplates
1.2.6 As-Built Drawings
1.2.7 Recessed Light Fixtures (RLF) Option
1.3 SUBMITTALS
1.4 WORKMANSHIP

PART 2 PRODUCTS

2.1 Not Used
2.2 CABLES AND WIRES
2.2.1 Equipment Manufacturer Requirements
2.2.2 Aluminum Conductors
2.2.3 Insulation
2.2.4 Bonding Conductors
2.2.5 Service Entrance Cables
2.2.6 Not Used
2.2.7 Not Used
2.2.8 Not Used
2.2.9 Not Used
2.2.10 Not Used
2.2.11 Not Used
2.2.12 Cord Sets and Power-Supply Cords
2.3 CABLE TRAYS
2.3.1 Trough
2.4 TRANSIENT VOLTAGE SURGE PROTECTION
2.5 Not Used
2.6 CIRCUIT BREAKERS
2.6.1 MOLDED-CASE CIRCUIT BREAKERS
2.6.1.1 Construction
2.6.1.2 Ratings
2.6.1.3 Cascade System Ratings
2.6.1.4 Thermal-Magnetic Trip Elements
2.6.2 Solid-State Trip Elements
2.6.3 Current-Limiting Circuit Breakers

2.6.4 Not Used
2.6.5 HACR Circuit Breakers
2.7 MOTOR SHORT-CIRCUIT PROTECTOR (MSCP)
2.7.1 Construction
2.7.2 Ratings
2.8 CONDUIT AND TUBING
2.8.1 Electrical, Zinc-Coated Steel Metallic Tubing (EMT)
2.8.2 Electrical Plastic Tubing and Conduit
2.8.3 Flexible Conduit, Steel and Plastic
2.8.4 Intermediate Metal Conduit
2.8.5 PVC Coated Rigid Steel Conduit
2.8.6 Not Used
2.8.7 Rigid Metal Conduit
2.8.8 Rigid Plastic
2.8.9 Not Used
2.9 CONDUIT AND DEVICE BOXES AND FITTINGS
2.9.1 Boxes, Metallic Outlet
2.9.2 Boxes, Nonmetallic, Outlet and Flush-Device Boxes and Covers
2.9.3 Boxes, Outlet for Use in Hazardous (Classified) Locations
2.9.4 Boxes, Switch (Enclosed), Surface-Mounted
2.9.5 Fittings for Conduit and Outlet Boxes
2.9.6 Not Used
2.9.7 Fittings, PVC, for Use with Rigid PVC Conduit and Tubing
2.10 Not Used
2.11 CONNECTORS, WIRE PRESSURE
2.11.1 For Use With Copper Conductors
2.11.2 For Use With Aluminum Conductors
2.12 ELECTRICAL GROUNDING AND BONDING EQUIPMENT
2.12.1 Ground Rods
2.12.2 Ground Bus
2.13 Not Used
2.14 FIXTURES, LIGHTING AND FIXTURE ACCESSORIES/COMPONENTS
2.14.1 Fixture, Auxiliary or Emergency
2.14.2 Incandescent Fixture
2.14.3 Fluorescent
2.14.4 High-Intensity-Discharge
2.15 LOW-VOLTAGE FUSES AND FUSEHOLDERS
2.15.1 Fuses, Low Voltage Cartridge Type
2.15.2 Fuses, High-Interrupting-Capacity, Current-Limiting Type
2.15.3 Fuses, Class K, High-Interrupting-Capacity Type
2.15.4 Fuses, Class H
2.15.5 Fuses, Class R
2.15.6 Fuses, Class T
2.15.7 Fuses for Supplementary Overcurrent Protection
2.15.8 Fuses, D-C for Industrial Use
2.15.9 Fuseholders
2.16 INSTRUMENTS, ELECTRICAL INDICATING
2.17 MOTORS, AC, FRACTIONAL AND INTEGRAL
2.17.1 Rating
2.17.2 Motor Efficiencies
2.18 MOTOR CONTROLS
2.18.1 General
2.18.2 Motor Starters
2.18.3 Thermal-Overload Protection
2.18.4 Low-Voltage Motor Overload Relays
2.18.4.1 General
2.18.4.2 Construction
2.18.4.3 Ratings
2.18.5 Not Used

2.19 PANELBOARDS
2.20 RECEPTACLES
2.20.1 Receptacles and face plates shall be ivory in color.
2.20.2 Not Used
2.20.3 Standard Grade
2.20.4 Ground Fault Interrupters
2.20.5 Not Used
2.20.6 NEMA Standard Receptacle Configurations
2.21 Service Entrance Equipment
2.22 SPLICE, CONDUCTOR
2.23 POWER-SWITCHGEAR ASSEMBLIES INCLUDING SWITCHBOARDS
2.23.1 Circuit Breakers
2.23.2 Auxiliary Equipment
2.23.2.1 Instruments
2.23.2.2 Control Switch
2.23.2.3 Control Power Sources
2.24 SNAP SWITCHES
2.25 TAPES
2.25.1 Plastic Tape
2.25.2 Rubber Tape
2.26 TRANSFORMERS
2.26.1 Transformers, Dry-Type
2.26.2 Not Used
2.26.3 Average Sound Level
2.27 Not Used
2.28 Not Used
2.29 WATTHOUR/DEMAND METERS, CHECK
2.30 INSTRUMENT TRANSFORMERS
2.30.1 General
2.30.2 Current Transformers
2.30.2.1 Not Used
2.30.2.2 Not used
2.30.2.3 Not Used
2.30.2.4 Current Transformers for kWH and Demand Metering (Low Voltage)
2.30.2.5 Not Used
2.31 WIRING DEVICES
2.32 Not Used
2.33 COORDINATED POWER SYSTEM PROTECTION
2.33.1 Scope of Analyses
2.33.2 Determination of Facts
2.33.3 Single Line Diagram
2.33.4 Fault Current Analysis
2.33.4.1 Method
2.33.4.2 Data
2.33.4.3 Fault Current Availability
2.33.5 Coordination Study
2.33.6 Study Report

PART 3 EXECUTION

3.1 GROUNDING
3.1.1 Ground Rods
3.1.2 Not Used
3.1.3 Grounding Conductors
3.2 WIRING METHODS
3.2.1 Conduit and Tubing Systems
3.2.1.1 Pull Wires
3.2.1.2 Conduit Stub-Ups

3.2.1.3 Below Slab-on-Grade or in the Ground
3.2.1.4 Installing in Slabs Including Slabs on Grade
3.2.1.5 Changes in Direction of Runs
3.2.1.6 Supports
3.2.1.7 Exposed Raceways
3.2.1.8 Exposed Risers
3.2.1.9 Exposed Lengths of Conduit, Over 600 Volts
3.2.1.10 Communications Raceways
3.2.2 Not Used
3.2.3 Cable Trays
3.2.4 Cables and Conductors
3.2.4.1 Sizing
3.2.4.2 Not Used
3.2.4.3 Not Used
3.2.4.4 Not Used
3.2.4.5 Cable Splicing
3.2.4.6 Conductor Identification and Tagging
3.3 BOXES AND SUPPORTS
3.3.1 Box Applications
3.3.2 Brackets and Fasteners
3.3.3 Mounting in Walls, Ceilings, or Recessed Locations
3.3.4 Installation in Overhead Spaces
3.4 DEVICE PLATES
3.5 RECEPTACLES
3.5.1 Single and Duplex, 15 or 20-ampere, 125 volt
3.5.2 Not Used
3.5.3 Floor Outlets
3.5.4 Weatherproof Applications
3.5.4.1 Damp Locations
3.5.4.2 Wet Locations
3.5.5 Receptacles, 15-Ampere, 250-Volt
3.5.6 Receptacles, 20-Ampere, 250-Volt
3.5.7 Receptacles, 30-Ampere, 125/250-Volt
3.5.8 Receptacles, 30-Ampere, 250-Volt
3.5.9 Receptacles, 50-Ampere, 125/250-Volt
3.5.10 Receptacles, 50-Ampere, 250-Volt
3.6 WALL SWITCHES
3.7 SERVICE EQUIPMENT
3.8 PANELBOARDS AND LOADCENTERS
3.8.1 Panelboards
3.9 FUSES
3.9.1 Cartridge Fuses; Noncurrent-Limiting Type
3.9.2 Cartridge Fuses; Current-Limiting Type
3.9.3 Not Used
3.9.4 Motor and Transformer Circuit Fuses
3.10 UNDERGROUND SERVICE
3.11 Not Used
3.12 MOTORS
3.13 MOTOR CONTROL
3.13.1 Not Used
3.13.2 Not Used
3.13.3 Contacts
3.13.4 Safety Controls
3.14 MOTOR-DISCONNECT MEANS
3.15 TRANSFORMER INSTALLATION
3.16 LAMPS AND LIGHTING FIXTURES
3.16.1 Lamps
3.16.1.1 Incandescent
3.16.1.2 Fluorescent

3.16.1.3 High-Intensity-Discharge
3.16.2 Fixtures
3.16.2.1 Accessories
3.16.2.2 Suspended Fixtures
3.16.2.3 Ceiling Fixtures
3.16.2.4 Sockets
3.16.3 Not Used
3.17 Not Used
3.18 EQUIPMENT CONNECTIONS
3.18.1 Motors and Motor Control
3.18.2 Installation of Government-Furnished Equipment
3.18.3 Food Service Equipment Provided Under Other Sections
3.19 CIRCUIT PROTECTIVE DEVICES
3.20 PAINTING AND FINISHING
3.21 Not Used
3.22 FIELD TESTING
3.22.1 Safety
3.22.2 Ground-Resistance Tests
3.22.3 Ground-Grid Connection Inspection
3.22.4 Cable Tests
3.22.4.1 Not Used
3.22.4.2 Low Voltage Cable Tests
3.22.5 Not Used
3.22.6 Motor Tests
3.22.7 Not Used
3.22.8 Dry-Type Transformer Tests
3.22.9 Circuit Breaker Tests
3.22.9.1 Not Used
3.22.9.2 Not Used
3.22.9.3 Circuit Breakers, Molded Case
3.22.10 Not Used
3.22.11 Not Used
3.23 OPERATING TESTS
3.24 FIELD SERVICE
3.24.1 Onsite Training
3.24.2 Installation Engineer
3.25 ACCEPTANCE

-- End of Section Table of Contents --

SECTION 16415

ELECTRICAL WORK, INTERIOR
08/96

PART 1 GENERAL

1.1 REFERENCES

The publications listed below form a part of this specification to the extent referenced. The publications are referred to in the text by basic designation only.

AMERICAN NATIONAL STANDARDS INSTITUTE (ANSI)

ANSI C12.10	(1987) Electromechanical Watthour Meters
ANSI C12.11	(1987; R 1993) Instrument Transformers for Revenue Metering, 10 kV BIL Through 350 kV BIL (0.6 kV NSV Through 69 kV NSV)
ANSI C39.1	(1981; R 1992) Requirements for Electrical Analog Indicating Instruments
ANSI C82.4	(1992) Ballasts for High-Intensity-Discharge and Low-Pressure Sodium Lamps (Multiple-Supply Type)

AMERICAN SOCIETY FOR TESTING AND MATERIALS (ASTM)

ASTM B 1	(1995) Hard-Drawn Copper Wire
ASTM B 8	(1995) Concentric-Lay-Stranded Copper Conductors, Hard, Medium-Hard, or Soft
ASTM D 709	(1992; R 1997) Laminated Thermosetting Materials

CODE OF FEDERAL REGULATIONS (CFR)

47 CFR 18	Industrial, Scientific, and Medical Equipment

INSTITUTE OF ELECTRICAL AND ELECTRONICS ENGINEERS (IEEE)

IEEE ANSI/IEEE C37.20.1	(1993) Metal-Enclosed Low-Voltage Power Circuit-Breaker Switchgear
IEEE ANSI/IEEE C57.13	(1993) Instrument Transformers
IEEE C62.41	(1991; R 1995) Surge Voltages in Low-Voltage AC Power Circuits
IEEE Std 81	(1983) Guide for Measuring Earth Resistivity, Ground Impedance, and Earth Surface Potentials of a Ground System

	(Part 1)
IEEE Std 242	(1986; R 1991) Recommended Practice for Protection and Coordination of Industrial and Commercial Power Systems
IEEE Std 399	(1990) Recommended Practice for Industrial and Commercial Power Systems Analysis

NATIONAL ELECTRICAL MANUFACTURERS ASSOCIATION (NEMA)

NEMA AB 1	(1993) Molded Case Circuit Breakers and Molded Case Switches
NEMA FU 1	(1986) Low Voltage Cartridge Fuses
NEMA ICS 1	(1993) Industrial Control and Systems
NEMA ICS 2	(1993) Industrial Control and Systems Controllers, Contactors, and Overload Relays Rated Not More Than 2,000 Volts AC or 750 Volts DC
NEMA ICS 3	(1993) Industrial Control and Systems Factory Built Assemblies
NEMA ICS 6	(1993) Industrial Control and Systems Enclosures
NEMA LE 4	(1987) Recessed Luminaires, Ceiling Compatibility
NEMA MG 1	(1993; Rev 1; Rev 2; Rev 3) Motors and Generators
NEMA MG 10	(1994) Energy Management Guide for Selection and Use of Polyphase Motors
NEMA OS 1	(1989) Sheet-Steel Outlet Boxes, Device Boxes, Covers, and Box Supports
NEMA OS 2	(1986; Errata Aug 1986; R 1991) Nonmetallic Outlet Boxes, Device Boxes, Covers and Box Supports
NEMA PB 1	(1990) Panelboards
NEMA PB 2	(1995) Deadfront Distribution Switchboards
NEMA RN 1	(1989) Polyvinyl-Chloride (PVC) Externally Coated Galvanized Rigid Steel Conduit and Intermediate Metal Conduit
NEMA ST 20	(1992) Dry-Type Transformers for General Applications
NEMA TC 2	(1990) Electrical Polyvinyl Chloride (PVC) Tubing (EPT) and Conduit (EPC-40 and EPC-80)

NEMA VE 1	(1996) Metal Cable Tray Systems
NEMA WD 1	(1983; R 1989) General Requirements for Wiring Devices
NEMA WD 6	(1988) Wiring Devices - Dimensional Requirements

NATIONAL FIRE PROTECTION ASSOCIATION (NFPA)

NFPA 70	(1996; Errata 96-4) National Electrical Code
NFPA 101	(1997; Errata 97-1) Life Safety Code

UNDERWRITERS LABORATORIES (UL)

UL 1	(1993; Rev thru Jan 1995) Flexible Metal Conduit
UL 6	(1997) Rigid Metal Conduit
UL 20	(1995; Rev thru Jan 1998) General-Use Snap Switches
UL 67	(1993; Rev thru Nov 1995) Panelboards
UL 83	(1996; Rev Sep 1997) Thermoplastic-Insulated Wires and Cables
UL 98	(1994; R thru Oct 1995) Enclosed and Dead-Front Switches
UL 198B	(1995) Class H Fuses
UL 198C	(1986; Rev thru Feb 1998) High-Interrupting-Capacity Fuses, Current-Limiting Types
UL 198D	(1995) Class K Fuses
UL 198E	(1988; Rev Jul 1988) Class R Fuses
UL 198G	(1988; Rev May 1988) Fuses for Supplementary Overcurrent Protection
UL 198H	(1988; Rev thru Nov 1993) Class T Fuses
UL 198L	(1995; Rev May 1995) D-C Fuses for Industrial Use
UL 360	(1996; Rev thru Oct 1997) Liquid-Tight Flexible Steel Conduit
UL 467	(1993; Rev thru Aug 1996) Grounding and Bonding Equipment
UL 486A	(1997) Wire Connectors and Soldering Lugs

	for Use with Copper Conductors
UL 486B	(1997; Rev Jun 1997) Wire Connectors for Use with Aluminum Conductors
UL 486C	(1997) Splicing Wire Connectors
UL 486E	(1994; Rev thru Feb 1997) Equipment Wiring Terminals for Use with Aluminum and/or Copper Conductors
UL 489	(1996; Rev thru Nov 1997) Molded-Case Circuit Breakers, Molded-Case Switches, and Circuit-Breaker Enclosures
UL 498	(1996; Rev thru Nov 1997) Attachment Plugs and Receptacles
UL 506	(1994; Rev Oct 1997) Specialty Transformers
UL 508	(1993; Rev thru Oct 1997) Industrial Control Equipment
UL 510	(1994; Rev thru Nov 1997) Insulating Tape
UL 512	(1993; R Dec 1995) Fuseholders
UL 514A	(1996) Metallic Outlet Boxes
UL 514B	(1997) Fittings for Conduit and Outlet Boxes
UL 514C	(1996) Nonmetallic Outlet Boxes, Flush-Device Boxes, and Covers
UL 542	(1994; Rev May 1997) Lampholders, Starters, and Starter Holders for Fluorescent Lamps
UL 651	(1995; Rev thru Apr 1997) Schedule 40 and 80 Rigid PVC Conduit
UL 651A	(1995; Rev Sep 1996) Type EB and A Rigid PVC Conduit and HDPE Conduit
UL 674	(1994; Rev thru Feb 1997) Electric Motors and Generators for Use in Division 1 Hazardous (Classified) Locations
UL 797	(1993; Rev thru Mar 1997) Electrical Metallic Tubing
UL 817	(1994; Rev thru Aug 1997) Cord Sets and Power-Supply Cords
UL 844	(1995; Rev thru Aug 1997) Electric Lighting Fixtures for Use in Hazardous (Classified) Locations

UL 845	(1995; Rev Feb 1996) Motor Control Centers
UL 854	(1996) Service-Entrance Cables
UL 869A	(1993; Rev thru Apr 1996) Reference Standard for Service Equipment
UL 877	(1993; Rev thru May 1997) Circuit Breakers and Circuit-Breaker Enclosures for Use in Hazardous (Classified) Locations
UL 886	(1994; Rev thru Jan 1997) Outlet Boxes and Fittings for Use in Hazardous (Classified) Locations
UL 891	(1994; Rev thru Jan 1995) Dead-Front Switchboards
UL 924	(1995; Rev thru Oct 97) Emergency Lighting and Power Equipment
UL 935	(1995; Rev thru Apr 1997)Fluorescent-Lamp Ballasts
UL 943	(1993; Rev thru Mar 1997)Ground-Fault Circuit-Interrupters
UL 1004	(1994; Rev thru Feb 1997) Electric Motors
UL 1029	(1994; Rev thru Sep 1995) High-Intensity-Discharge Lamp Ballasts
UL 1242	(1996; Rev Apr 1997) Intermediate Metal Conduit
UL 1449	(1985; Errata Apr 1986; Rev May 1995) Transient Voltage Surge Suppressors
UL 1570	(1995; Rev thru Jun 1997) Fluorescent Lighting Fixtures
UL 1571	(1995; Rev thru Jun 97) Incandescent Lighting Fixtures
UL 1572	(1995; Rev thru Jun 97) High Intensity Discharge Lighting Fixtures
UL 1660	(1994; Rev Jan 1996) Liquid-Tight Flexible Nonmetallic Conduit
UL Elec Const Dir	(1997) Electrical Construction Equipment Directory

1.2 GENERAL

1.2.1 Rules

The installation shall conform to the requirements of NFPA 70 and NFPA 101, unless more stringent requirements are indicated or shown.

1.2.2 Coordination

The drawings indicate the extent and the general location and arrangement of equipment, conduit, and wiring. The Contractor shall become familiar with all details of the work and verify all dimensions in the field so that the outlets and equipment shall be properly located and readily accessible. Lighting fixtures, outlets, and other equipment and materials shall be located to avoid interference with mechanical or structural features; otherwise, lighting fixtures shall be symmetrically located according to the room arrangement when uniform illumination is required, or asymmetrically located to suit conditions fixed by design and shown. Raceways, junction and outlet boxes, and lighting fixtures shall not be supported from sheet metal roof decks. If any conflicts occur necessitating departures from the drawings, details of and reasons for departures shall be submitted and approved prior to implementing any change. The Contractor shall coordinate electrical work with the HVAC and electrical drawings and specifications and provide power related wiring.

1.2.3 Special Environments

1.2.3.1 Weatherproof Locations

Wiring, Fixtures, and equipment in designated locations shall conform to NFPA 70 requirements for installation in damp or wet locations.

1.2.3.2 Not Used

1.2.3.3 Ducts, Plenums and Other Air-Handling Spaces

Wiring and equipment in ducts, plenums and other air-handling spaces shall be installed using materials and methods in conformance with NFPA 70unless more stringent requirements are indicated in this specification or on the contract drawings.

1.2.4 Standard Products

Material and equipment shall be a standard product of a manufacturer regularly engaged in the manufacture of the product and shall essentially duplicate items that have been in satisfactory use for at least 2 years prior to bid opening.

1.2.5 NAMEPLATES

1.2.5.1 Identification Nameplates

Major items of electrical equipment and major components shall be permanently marked with an identification name to identify the equipment by type or function and specific unit number as indicated. Designation of motors shall coincide with their designation in the motor control center or panel. Unless otherwise specified, identification nameplates shall be made of laminated plastic in accordance with ASTM D 709 with black outer layers and a white core. Edges shall be chamfered. Plates shall be fastened with black-finished round-head drive screws, except motors, or approved nonadhesive metal fasteners. When the nameplate is to be installed on an irregular-shaped object, the Contractor shall devise an approved support suitable for the application and ensure the proper installation of the supports and nameplates. In all instances, the nameplate shall be installed in a conspicuous location. At the option of the Contractor, the

equipment manufacturer's standard embossed nameplate material with black paint-filled letters may be furnished in lieu of laminated plastic. The front of each panelboard, motor control center, switchgear, and switchboard shall have a nameplate to indicate the phase letter, corresponding color and arrangement of the phase conductors. The following equipment, as a minimum, shall be provided with identification nameplates:

Minimum 1/4 inch High Letters	Minimum 1/8 inch High Letters
Panelboards	
Starters	
Safety Switches	
Transformers	
Equipment Enclosures	
Switchboards	
Motors	

Each panel, section, or unit in motor control centers, switchgear or similar assemblies shall be provided with a nameplate in addition to nameplates listed above, which shall be provided for individual compartments in the respective assembly, including nameplates which identify "future," "spare," and "dedicated" or "equipped spaces."

1.2.6 As-Built Drawings

Following the project completion or turnover, within 30 days the Contractor shall furnish 2 sets of as-built drawings to the Contracting Officer.

1.2.7 Recessed Light Fixtures (RLF) Option

The Contractor has the option to substitute inch-pound (I-P) RLF to metric RLF. This option shall be coordinated with Section \=09510=\ ACOUSTICAL CEILINGS.

1.3 SUBMITTALS

Government approval is required for submittals with a "GA" designation; submittals having an "FIO" designation are for information only. The following shall be submitted in accordance with Section 01330 SUBMITTAL PROCEDURES:

SD-01 Data

Fault Current and Protective Device Coordination Study; GA.

The study shall be submitted along with protective device equipment submittals. No time extensions or similar contract modifications will be granted for work arising out of the requirements for this study. Approval of protective devices proposed shall be based on recommendations of this study, The Government shall not be held responsible for any changes to equipment, device ratings, settings, or additional labor for installation of equipment or devices ordered and/or procured prior to approval of the study.

Manufacturer's Catalog; GA.

Data composed of catalog cuts, brochures, circulars, specifications, product data, and printed information in sufficient detail and scope to verify compliance with the requirements of the contract documents.

Material, Equipment, and Fixture Lists; GA1.

A complete itemized listing of equipment and materials proposed for incorporation into the work. Each entry shall include an item number, the quantity of items proposed, and the name of the manufacturer of each item.

Installation Procedures; FIO.

Installation procedures for rotating equipment, transformers, switchgear, battery systems, voltage regulators, and grounding resistors. Procedures shall include diagrams, instructions, and precautions required to install, adjust, calibrate, and test devices and equipment.

SD-04 Drawings

Interior Electrical Equipment; GA1.

Detail drawings consisting of equipment drawings, illustrations, schedules, instructions, diagrams, and other information necessary to define the installation. Detail drawings shall show the rating of items and systems and how the components of an item and system are assembled, function together, and how they will be installed on the project. Data and drawings for component parts of an item or system shall be coordinated and submitted as a unit. Data and drawings shall be coordinated and included in a single submission. Multiple submissions for the same equipment or system are not acceptable except where prior approval has been obtained from the Contracting Officer. In such cases, a list of data to be submitted later shall be included with the first submission. Detail drawings shall show physical arrangement, construction details, connections, finishes, materials used in fabrication, provisions for conduit or busway entrance, access requirements for installation and maintenance, physical size, electrical characteristics, foundation and support details, and equipment weight. Drawings shall be drawn to scale and/or dimensioned. Optional items shall be clearly identified as included or excluded. Detail drawings shall as a minimum include:

a. Transformers.

Structural drawings showing the structural or physical features of major equipment items, components, assemblies, and structures, including foundations or other types of supports for equipment and conductors. These drawings shall include accurately scaled or dimensioned outline and arrangement or layout drawings to show the physical size of equipment and components and the relative arrangement and physical connection of related components. Weights of equipment, components and assemblies shall be provided when required to verify the adequacy of design and proposed construction of foundations or other types of supports. Dynamic forces shall be stated for switching devices when such forces must be considered in the design of support structures. The appropriate detail drawings shall show the provisions for leveling, anchoring, and connecting all items during installation, and shall include any recommendations made by the manufacturer.

Electrical drawings including single-line and three-line diagrams, and schematics or elementary diagrams of each electrical system; internal

wiring and field connection diagrams of each electrical device when published by the manufacturer; wiring diagrams of cabinets, panels, units, or separate mountings; interconnection diagrams that show the wiring between separate components of assemblies; field connection diagrams that show the termination of wiring routed between separate items of equipment; internal wiring diagrams of equipment showing wiring as actually provided for this project. Field wiring connections shall be clearly identified.

If departures from the contract drawings are deemed necessary by the Contractor, complete details of such departures, including changes in related portions of the project and the reasons why, shall be submitted with the detail drawings. Approved departures shall be made at no additional cost to the Government.

As-Built Drawings; GA.

The as-built drawings shall be a record of the construction as installed. The drawings shall include all the information shown on the contract drawings, deviations, modifications, and changes from the contract drawings, however minor. The as-built drawings shall be kept at the job site and updated daily. The as-built drawings shall be a full-sized set of prints marked to reflect all deviations, changes, and modifications. The as-built drawings shall be complete and show the location, size, dimensions, part identification, and other information. Additional sheets may be added. The as-built drawings shall be jointly inspected for accuracy and completeness by the Contractor's quality control representative and by the Contracting Officer prior to the submission of each monthly pay estimate. Upon completion of the work, the Contractor shall submit three full sized sets of the marked prints to the Contracting Officer for approval. If upon review, the as-built drawings are found to contain errors and/or omissions, they will be returned to the Contractor for correction. The Contractor shall correct and return the as-built drawings to the Contracting Officer for approval within ten calendar days from the time the drawings are returned to the Contractor.

SD-08 Statements

Onsite Test; GA.

A detailed description of the Contractor's proposed procedures for on-site tests.

SD-09 Reports

Factory Test Reports; GA.

Six copies of the information described below in 8 1/2 x 11 inch binders having a minimum of 5 rings from which material may readily be removed and replaced, including a separate section for each test. Sections shall be separated by heavy plastic dividers with tabs.

a. A list of equipment used, with calibration certifications.

b. A copy of measurements taken.

c. The dates of testing.

d. The equipment and values to be verified.

e. The conditions specified for the test.

f. The test results, signed and dated.

g. A description of adjustments made.

Field Test Plan; GA.

A detailed description of the Contractor's proposed procedures for onsite test submitted 30 days prior to testing the installed system. No field test will be performed until the test plan is approved. The test plan shall consist of complete field test procedures including tests to be performed, test equipment required, and tolerance limits.

Field Test Reports; GA.

Six copies of the information described below in 8 1/2 x 11 inch binders having a minimum of 5 rings from which material may readily be removed and replaced, including a separate section for each test. Sections shall be separated by heavy plastic dividers with tabs.

a. A list of equipment used, with calibration certifications.

b. A copy of measurements taken.

c. The dates of testing.

d. The equipment and values to be verified.

e. The conditions specified for the test.

f. The test results, signed and dated.

g. A description of adjustments made.

h. Final position of controls and device settings.

SD-13 Certificates

Materials and Equipment; FIO.

The label or listing of the Underwriters Laboratories, Inc., will be accepted as evidence that the materials or equipment conform to the applicable standards of that agency. In lieu of this label or listing, a statement from a nationally recognized, adequately equipped testing agency indicating that the items have been tested in accordance with required procedures and that the materials and equipment comply with all contract requirements will be accepted. However, materials and equipment installed in hazardous locations must bear the UL label unless the data submitted from other testing agency is specifically approved in writing by the Contracting Officer. Items which are required to be listed and labeled in accordance with Underwriters Laboratories must be affixed with a UL label that states that it is UL listed. No exceptions or waivers will be granted to this requirement. Materials and equipment will be approved based on the manufacturer's published data.

For other than equipment and materials specified to conform to UL publications, a manufacturer's statement indicating complete compliance with the applicable standard of the American Society for Testing and

Materials, National Electrical Manufacturers Association, or other commercial standard, is acceptable.

1.4 WORKMANSHIP

Materials and equipment shall be installed in accordance with NFPA 70, recommendations of the manufacturer, and as shown.

PART 2 PRODUCTS

Products shall conform to the respective publications and other requirements specified below. Materials and equipment not listed below shall be as specified elsewhere in this section. Items of the same classification shall be identical including equipment, assemblies, parts, and components.

2.1 Not Used

2.2 CABLES AND WIRES

Conductors No. 8 AWG and larger diameter shall be stranded. Conductors No. 10 AWG and smaller diameter shall be solid, except that conductors for remote control, alarm, and signal circuits, classes 1, 2, and 3, shall be stranded unless specifically indicated otherwise. Conductor sizes and ampacities shown are based on copper, unless indicated otherwise. All conductors shall be copper.

2.2.1 Equipment Manufacturer Requirements

When manufacturer's equipment requires copper conductors at the terminations or requires copper conductors to be provided between components of equipment, provide copper conductors or splices, splice boxes, and other work required to meet manufacturer's requirements.

2.2.2 Aluminum Conductors

Aluminum conductors shall not be used.

2.2.3 Insulation

Unless indicated otherwise, or required by NFPA 70, power and lighting wires shall be 600-volt, Type THWN, THHN, or THW conforming to UL 83, except that grounding wire may be type TW conforming to UL 83; remote-control and signal circuits shall be Type TW, THW or TF, conforming to UL 83. Where lighting fixtures require 90-degree Centigrade (C) conductors, provide only conductors with 90-degree C insulation or better.

2.2.4 Bonding Conductors

ASTM B 1, solid bare copper wire for sizes No. 8 AWG and smaller diameter; ASTM B 8, Class B, stranded bare copper wire for sizes No. 6 AWG and larger diameter.

2.2.5 Service Entrance Cables

Service entrance (SE) and underground service entrance (USE) cables, UL 854.

2.2.6 Not Used

2.2.7 Not Used

2.2.8 Not Used

2.2.9 Not Used

2.2.10 Not Used

2.2.11 Not Used

2.2.12 Cord Sets and Power-Supply Cords

UL 817.

2.3 CABLE TRAYS

NEMA VE 1 cable trays shall form a wireway system, and shall be of nominal 4 inch depth. Cable trays shall be constructed of aluminum. Trays shall include splice and end plates, dropouts, and miscellaneous hardware. Edges, fittings, and hardware shall be finished free from burrs and sharp edges. Fittings shall have not less than the load-carrying ability of straight tray sections and shall have manufacturer's minimum standard radius. Radius of bends shall be 12 inches..

2.3.1 Trough

Trough-type cable trays shall be sized as indicated on drawings.

2.4 TRANSIENT VOLTAGE SURGE PROTECTION

Transient voltage surge suppressors shall be provided as indicated. Surge suppressors shall meet the requirements of IEEE C62.41 and be UL listed and labeled as having been tested in accordance with UL 1449. Surge suppressor ratings shall be 120/208 volts rms, operating voltage; 60 Hz; 3-phase; 4 wire with ground; transient suppression voltage (peak let-through voltage) of 330 volts.

2.5 Not Used

2.6 CIRCUIT BREAKERS

2.6.1 MOLDED-CASE CIRCUIT BREAKERS

Molded-case circuit breakers shall conform to NEMA AB 1 and UL 489and UL 877 for circuit breakers and circuit breaker enclosures located in hazardous (classified) locations. Circuit breakers may be installed in panelboards, switchboards, enclosures, motor control centers, or combination motor controllers.

2.6.1.1 Construction

Circuit breakers shall be suitable for mounting and operating in any position. Lug shall be listed for [copper conductors only] [copper and aluminum conductors] in accordance with UL 486E. Single-pole circuit breakers shall be full module size with not more than one pole per module. Multi-pole circuit breakers shall be of the common-trip type having a single operating handle such that an overload or short circuit on any one pole will result in all poles opening simultaneously. Sizes of 100 amperes or less may consist of single-pole breakers permanently factory assembled

into a multi-pole unit having an internal, mechanical, nontamperable common-trip mechanism and external handle ties. All circuit breakers shall have a quick-make, quick-break overcenter toggle-type mechanism, and the handle mechanism shall be trip-free to prevent holding the contacts closed against a short-circuit or sustained overload. All circuit breaker handles shall assume a position between "ON" and "OFF" when tripped automatically. All ratings shall be clearly visible.

2.6.1.2 Ratings

Voltage ratings shall be not less than the applicable circuit voltage. The interrupting rating of the circuit breakers shall be at least equal to the available short-circuit current at the line terminals of the circuit breaker and correspond to the UL listed integrated short-circuit current rating specified for the panelboards and switchboards. Molded-case circuit breakers shall have nominal voltage ratings, maximum continuous-current ratings, and maximum short-circuit interrupting ratings in accordance with NEMA AB 1. Ratings shall be coordinated with system X/R ratio.

2.6.1.3 Cascade System Ratings

Circuit breakers used in series combinations shall be in accordance with UL 489. Equipment, such as switchboards and panelboards, which house series-connected circuit breakers shall be clearly marked accordingly. Series combinations shall be listed in the UL Recognized Component Directory under "Circuit Breakers-Series Connected."

2.6.1.4 Thermal-Magnetic Trip Elements

Thermal magnetic circuit breakers shall be provided as shown. Automatic operation shall be obtained by means of thermal-magnetic tripping devices located in each pole providing inverse time delay and instantaneous circuit protection. The instantaneous magnetic trip shall be adjustable and accessible from the front of all circuit breakers on frame sizes above 100 amperes.

2.6.2 Solid-State Trip Elements

Solid-state circuit breakers shall be provided as shown. All electronics shall be self-contained and require no external relaying, power supply, or accessories. Printed circuit cards shall be treated to resist moisture absorption, fungus growth, and signal leakage. All electronics shall be housed in an enclosure which provides protection against arcs, magnetic interference, dust, and other contaminants. Solid-state sensing shall measure true RMS current with error less than one percent on systems with distortions through the 13th harmonic. Peak or average actuating devices are not acceptable. Current sensors shall be torodial construction, encased in a plastic housing filled with epoxy to protect against damage and moisture and shall be integrally mounted on the breaker. Where indicated on the drawings, circuit breaker frames shall be rated for 100 percent continuous duty. Circuit breakers shall have tripping features as shown on the drawings and as described below:

a. Long-time current pick-up, adjustable from 50 percent to 100 percent of continuous current rating.

b. Adjustable long-time delay.

c. Short-time current pick-up, adjustable from 1.5 to 9 times

long-time current setting.

d. Adjustable short-time delay.

e. Short-time I square times t switch.

f. Instantaneous current pick-up, adjustable from 1.5 to 9 times long-time current setting.

2.6.3 Current-Limiting Circuit Breakers

Current-limiting circuit breakers shall be provided as shown. Current-limiting circuit breakers shall limit the let-through I square times t to a value less than the I square times t of one-half cycle of the symmetrical short-circuit current waveform. On fault currents below the threshold of limitation, breakers shall provide conventional overload and short-circuit protection. Integrally-fused circuit breakers shall not be used.

2.6.4 Not Used

2.6.5 HACR Circuit Breakers

Circuit breakers 60 amperes or below, 240 volts, 1-pole or 2-pole, intended to protect multi-motor and combination-load installations involved in heating, air conditioning, and refrigerating equipment shall be marked "Listed HACR Type."

2.7 MOTOR SHORT-CIRCUIT PROTECTOR (MSCP)

Motor short-circuit protectors shall conform to UL 508 and shall be provided as shown. Protectors shall be used only as part of a combination motor controller which provides coordinated motor branch-circuit overload and short-circuit protection, and shall be rated in accordance with the requirements of NFPA 70.

2.7.1 Construction

Motor short-circuit protector bodies shall be constructed of high temperature, dimensionally stable, long life, nonhygroscopic materials. Protectors shall fit special MSCP mounting clips and shall not be interchangeable with any commercially available fuses. Protectors shall have 100 percent one-way interchangeability within the A-Y letter designations. All ratings shall be clearly visible.

2.7.2 Ratings

Voltage ratings shall be not less than the applicable circuit voltage. Letter designations shall be A through Y for motor controller Sizes 0, 1, 2, 3, 4, and 5, with 100,000 amperes interrupting capacity rating. Letter designations shall correspond to controller sizes as follows:

CONTROLLER SIZE	MSCP DESIGNATION
NEMA O	A-N
NEMA 1	A-P
NEMA 2	A-S

CONTROLLER SIZE	MSCP DESIGNATION
NEMA 3	A-U
NEMA 4	A-W
NEMA 5	A-Y

2.8 CONDUIT AND TUBING

2.8.1 Electrical, Zinc-Coated Steel Metallic Tubing (EMT)

UL 797

2.8.2 Electrical Plastic Tubing and Conduit

NEMA TC 2.

2.8.3 Flexible Conduit, Steel and Plastic

General-purpose type, UL 1; liquid tight, UL 360, and UL 1660.

2.8.4 Intermediate Metal Conduit

UL 1242.

2.8.5 PVC Coated Rigid Steel Conduit

NEMA RN 1.

2.8.6 Not Used2.8.7 Rigid Metal Conduit

UL 6.

2.8.8 Rigid Plastic

NEMA TC 2, UL 651 and UL 651A.

2.8.9 Not Used

2.9 CONDUIT AND DEVICE BOXES AND FITTINGS

2.9.1 Boxes, Metallic Outlet

NEMA OS 1 and UL 514C.

2.9.2 Boxes, Nonmetallic, Outlet and Flush-Device Boxes and Covers

NEMA OS 2 and UL 514C.

2.9.3 Boxes, Outlet for Use in Hazardous (Classified) Locations

UL 886.

2.9.4 Boxes, Switch (Enclosed), Surface-Mounted

UL 98.

2.9.5 Fittings for Conduit and Outlet Boxes

UL 514B.

2.9.6 Not Used

2.9.7 Fittings, PVC, for Use with Rigid PVC Conduit and Tubing

UL 514B.

2.10 Not Used2.11 CONNECTORS, WIRE PRESSURE

2.11.1 For Use With Copper Conductors

UL 486A.

2.11.2 For Use With Aluminum Conductors

UL 486B.

2.12 ELECTRICAL GROUNDING AND BONDING EQUIPMENT

UL 467.

2.12.1 Ground Rods

Ground rods shall be of copper-clad steel conforming to UL 467 not less than 5/8 inch in diameter by 10 feet in length of the sectional type driven full length into the earth.

2.12.2 Ground Bus

The ground bus shall be bare conductor or flat copper in one piece, if practicable.

2.13 Not Used

2.14 FIXTURES, LIGHTING AND FIXTURE ACCESSORIES/COMPONENTS

Standard Drawing 40-06-04 sheets referenced hereinafter and enclosed as an integral part of these specifications, additional fixtures shown on contract drawings, if any, and UL 844 for fixtures to be installed in hazardous (classified) locations. Fixtures, accessories and components, including ballasts, lampholders, lamps, starters and starter holders, shall conform to industry standards specified below.

2.14.1 Fixture, Auxiliary or Emergency

UL 924.

2.14.2 Incandescent Fixture

NEMA LE 4 for ceiling compatibility of recessed fixtures and UL 1571.

2.14.3 Fluorescent

a. Fixture: NEMA LE 4 for ceiling compatibility of recessed fixtures and UL 1570. Fixtures shall be plainly marked for proper lamp and ballast type to identify lamp diameter, wattage, color and start

type. Marking shall be readily visible to service personnel, but not visible from normal viewing angles.

b. Ballasts:

(1) Magnetic ballasts shall not be used:.

(2) Electronic Ballast. Electronic ballasts shall consist of a rectifier, high frequency inverter, and power control and regulation circuitry. The ballasts shall be UL listed, Class P, with a Class A sound rating and shall contain no PCBs. Ballasts shall meet 47 CFR 18 for electromagnetic interference and shall not interfere with the operation of other electrical equipment. Design shall withstand line transients per IEEE C62.41, Category A. Unless otherwise indicated, the minimum number of ballasts shall be used to serve each individual fixture, using one, two, three or four lamp ballasts. A single ballast may be used to serve multiple fixtures if they are continuous mounted, factory manufactured for that installation with an integral wireway, and are identically controlled.

(a) Light output regulation shall be +/- 10%.

(b) Voltage input regulation shall be +/- 10%.

(c) Lamp current crest factor shall be no more than 1.6.

(d) Ballast factor shall be not less than 85% nor more than 100%, unless otherwise indicated.

(e) A 60 Hz filter shall be provided. Flicker shall be no more than 10% with any lamp suitable for the ballast.

(f) Ballast case temperature shall not exceed 25 degree Celsius rise above 40 degree Celsius ambient, when tested in accordance with UL 935.

(g) Total harmonic distortion shall be less than 10%.

(h) Power factor shall not be less than 0.95.

(i) Ballasts shall operate at a frequency of 20 kHz or more.

(j) Operating filament voltage shall be 2.5 to 4.5 volts.

(k) Warranty. Three year full warranty including a $10 labor allowance.

(l) Ballast Efficacy Factor (BEF) shall be in accordance with the following table. Ballasts and lamps shall be matching rapid start or instant start as indicated on the following table. If 32W-F32-T8 lamps and ballasts are used, they must be either all rapid start or all instant start.

ELECTRONIC FLUORESCENT BALLAST EFFICACY FACTORS*

LAMP TYPE	TYPE OF STARTER & LAMP	NOMINAL OPERATIONAL INPUT VOLTAGE	NUMBER OF LAMPS	MIN. BALLAST EFFICACY FACTOR
32W F32 T8	rapid or instant start	120 or 277 V	1	2.4
			2	1.4
			3	1.0
			4	0.8

*For ballasts not specifically designed for use with dimming controls

The BEF is calculated using the formula:

BEF = Ballast Factor (in percent) / Power Input

Where Power Input = Total Wattage of Combined Lamps and Ballasts.

c. Lampholders, Starters, and Starter Holders: UL 542.

2.14.4 High-Intensity-Discharge

a. Fixture: NEMA LE 4 for ceiling compatibility of recessed fixtures and UL 1572.

b. Ballasts: ANSI C82.4 for multiple supply types and UL 1029.

2.15 LOW-VOLTAGE FUSES AND FUSEHOLDERS

2.15.1 Fuses, Low Voltage Cartridge Type

NEMA FU 1.

2.15.2 Fuses, High-Interrupting-Capacity, Current-Limiting Type

Fuses, Class G, J, L and CC shall be in accordance with UL 198C.

2.15.3 Fuses, Class K, High-Interrupting-Capacity Type

UL 198D.

2.15.4 Fuses, Class H

UL 198B.

2.15.5 Fuses, Class R

UL 198E.

2.15.6 Fuses, Class T

UL 198H.

2.15.7 Fuses for Supplementary Overcurrent Protection

UL 198G.

2.15.8 Fuses, D-C for Industrial Use

UL 198L.

2.15.9 Fuseholders

UL 512.

2.16 INSTRUMENTS, ELECTRICAL INDICATING

ANSI C39.1.

2.17 MOTORS, AC, FRACTIONAL AND INTEGRAL

Motors, ac, fractional and integral horsepower, 500 hp and smaller shall conform to NEMA MG 1 and UL 1004for motors; NEMA MG 10 for energy management selection of polyphase motors; and UL 674 for use of motors in hazardous (classified) locations.

2.17.1 Rating

The horsepower rating of motors should be limited to no more than 125 percent of the maximum load being served unless a NEMA standard size does not fall within this range. In this case, the next larger NEMA standard motor size should be used.

2.17.2 Motor Efficiencies

All permanently wired polyphase motors of 1 hp or more shall meet the minimum full-load efficiencies as indicated in the following table, and as specified in this specification. Motors of 1 hp or more with open, drip proof or totally enclosed fan cooled enclosures shall be high efficiency type, unless otherwise indicated. Motors provided as an integral part of motor driven equipment are excluded from this requirement if a minimum seasonal or overall efficiency requirement is indicated for that equipment by the provisions of another section.

Minimum Motor Efficiencies

HP	Std. Efficiency	High Efficiency
1	77.0	85.5
1.5	78.5	85.5
2	78.5	85.5
3	78.5	88.5
5	82.5	88.5
7.5	84.0	90.0
10	85.5	90.0
15	85.5	91.0
20	87.5	92.0
25	88.5	92.0
30	88.5	92.0
40	88.5	92.0
50	89.0	92.5
60	89.0	92.5

Minimum Motor Efficiencies

HP	Std. Efficiency	High Efficiency
75	89.0	95.5
100	90.0	93.5
125	91.0	94.5
150	91.0	94.5
200	91.0	94.5
250	91.0	94.5
300	91.0	94.5
350	91.0	94.5
400	91.0	94.5
500	91.0	94.5

2.18 MOTOR CONTROLS

2.18.1 General

NEMA ICS 1, NEMA ICS 2, NEMA ICS 3 and NEMA ICS 6, and UL 508 and UL 845. Panelboards supplying non-linear loads shall have neutrals sized for 200 percent of rated current.

2.18.2 Motor Starters

Combination starters shall be provided with fusible switches with high-interrupting-capacity current-limiting fuses.

2.18.3 Thermal-Overload Protection

Each motor of 1/8 hp or larger shall be provided with thermal-overload protection. Polyphase motors shall have overload protection in each ungrounded conductor. The overload-protection device shall be provided either integral with the motor or controller, or shall be mounted in a separate enclosure. Unless otherwise specified, the protective device shall be of the manually reset type. Single or double pole tumbler switches specifically designed for alternating-current operation only may be used as manual controllers for single-phase motors having a current rating not in excess of 80 percent of the switch rating.

2.18.4 Low-Voltage Motor Overload Relays

2.18.4.1 General

Thermal overload relays shall conform to NEMA ICS 2 and UL 508. Overload protection shall be provided either integral with the motor or motor controller, and shall be rated in accordance with the requirements of NFPA 70. Standard units shall be used for motor starting times up to 7 seconds. Slow units shall be used for motor starting times from 8 to 12 seconds..

2.18.4.2 Construction

Manual reset type thermal relay shall be bimetallic construction. Automatic reset type thermal relays shall be bimetallic construction. Magnetic current relays shall consist of a contact mechanism and a dash pot mounted on a common frame.

2.18.4.3 Ratings

Voltage ratings shall be not less than the applicable circuit voltage. Trip current ratings shall be established by selection of the replaceable overload device and shall not be adjustable. Where the controller is remotely-located or difficult to reach, an automatic reset, non-compensated overload relay shall be provided. Manual reset overload relays shall be provided otherwise, and at all locations where automatic starting is provided. Where the motor is located in a constant ambient temperature, and the thermal device is located in an ambient temperature that regularly varies by more than minus 18 degrees F, an ambient temperature-compensated overload relay shall be provided.

2.18.5 Not Used2.19 PANELBOARDS

Dead-front construction, NEMA PB 1 and UL 67.

2.20 RECEPTACLES

2.20.1 Receptacles and face plates shall be ivory in color.

2.20.2 Not Used

2.20.3 Standard Grade

UL 498.

2.20.4 Ground Fault Interrupters

UL 943, Class A or B.

2.20.5 Not Used

2.20.6 NEMA Standard Receptacle Configurations

NEMA WD 6.

a. Single and Duplex, 15-Ampere and 20-Ampere, 125 Volt

15-ampere, non-locking: NEMA type 5-15R, locking: NEMA type L5-15R, 20-ampere, non-locking: NEMA type 5-20R, locking: NEMA type L5-20R.

b. 15-Ampere, 250 Volt

Two-pole, 3-wire grounding, non-locking: NEMA type 6-15R, locking: NEMA type L6-15R. Three-pole, 4-wire grounding, non-locking: NEMA type 15-15R, locking: NEMA type L15-15R.

c. 20-Ampere, 250 Volt

Two-pole, 3-wire grounding, non-locking: NEMA type 6-20R, locking: NEMA type L6-20R. Three-pole, 4-wire grounding, non-locking: NEMA type 15-20R, locking: NEMA type L15-20R.

d. 30-Ampere, 125/250 Volt

Three-pole, 3-wire, non-locking: NEMA type 10-30R, locking: NEMA type L10-30R. Three-pole, 4-wire grounding, non-locking: NEMA type 14-30R, locking: NEMA type L14-30R.

e. 30-Ampere, 250 Volt

Two-pole, 3-wire grounding, non-locking: NEMA type 6-30R, locking: NEMA type L6-30R. Three-pole, 4-wire grounding, non-locking: NEMA type 15-30R, locking: NEMA type L15-30R.

f. 50-Ampere, 125/250 Volt

Three-pole, 3-wire: NEMA type 10-50R. Three-pole, 4-wire grounding: NEMA type 14-50R.

g. 50-Ampere, 250 Volt

Two-pole, 3-wire grounding: NEMA type 6-50R. Three-pole, 4-wire grounding: NEMA type 15-50R.

2.21 Service Entrance Equipment

UL 869A.

2.22 SPLICE, CONDUCTOR

UL 486C.

2.23 POWER-SWITCHGEAR ASSEMBLIES INCLUDING SWITCHBOARDS

Assemblies shall be metal-enclosed, freestanding general-purpose type in accordance with NEMA PB 2, UL 891, and IEEE ANSI/IEEE C37.20.1 and shall be installed to provide front and rear access. Busses shall be copper or aluminum. Assembly shall be approximately 90 inches high; arrangement of circuit breakers and other items specified shall be as indicated. The withstand rating and interrupting capacity of the switchboards and circuit breakers shall be based on the maximum fault current available.

2.23.1 Circuit Breakers

Circuit breakers shall be stationarymolded-case circuit breakers.

2.23.2 Auxiliary Equipment

2.23.2.1 Instruments

Instruments shall be long scale, 6.8 inches minimum, semiflush rectangular, indicating or digital switchboard type, mounted at eye level.

a. Ammeter, range 0 to 2000 amperes, complete with selector switch having off position and positions to read each phase current.

b. Voltmeter, range 0 to 250 volts, complete with selector switch having off position and positions to read each phase to phase voltage.

2.23.2.2 Control Switch

A control switch with indicating lights shall be provided for each electrically operated breaker.

2.23.2.3 Control Power Sources

Control buses and control power transformers shall conform to the requirements of Section 16311 MAIN ELECTRIC SUPPLY STATION AND SUBSTATION, where required. Control power shall be 120-volt AC.

2.24 SNAP SWITCHES

UL 20.

2.25 TAPES

2.25.1 Plastic Tape

UL 510.

2.25.2 Rubber Tape

UL 510.

2.26 TRANSFORMERS

Single- and three-phase transformers shall have two windings per phase. Full-capacity standard NEMA taps shall be provided in the primary windings of transformers unless otherwise indicated. Three-phase transformers shall be configured with delta-wye windings, except as indicated. "T" connections may be used for transformers rated 15 kVA or below. Transformers supplying non-linear loads shall be UL listed as suitable for supplying such loads with a total K-factor not to exceed K-9 and have neutrals sized for 200 percent of rated current.

2.26.1 Transformers, Dry-Type

Transformers shall have 220 degrees C insulation system for transformers 15 kVA and greater, and shall have 180 degrees C insulation system for transformers rated 10 kVA and less, with temperature rise not exceeding 150 degrees C under full-rated load in maximum ambient temperature of 40 degrees C. Transformer of 150 degrees C temperature rise shall be capable of carrying continuously 100 percent of nameplate kVA without exceeding insulation rating..

a. 600 Volt or Less Primary:

NEMA ST 20, UL 506, general purpose, dry-type, self-cooled, ventilated. Transformers shall be provided in NEMA 1 enclosure. Transformers shall be quiet type with maximum sound level at least 3 decibels less than NEMA standard level for transformer ratings indicated.

2.26.2 Not Used2.26.3 Average Sound Level

The average sound level in decibels (dB) of transformers shall not exceed the following dB level at 12 inches for the applicable kVA rating range listed unless otherwise indicated:

kVA Range	dB Sound Level
1-50	50
51-150	55
151-300	58
301-500	60
501-700	62

kVA Range	dB Sound Level
701-1000	64
1001-1500	65
1501 & above	70

2.27 Not Used2.28 Not Used2.29 WATTHOUR/DEMAND METERS, CHECK

ANSI C12.10 for self-contained watthour-demand meter with pulse-initiators for remote monitoring of watt-hour usage. Meter shall be switchboard type..

2.30 INSTRUMENT TRANSFORMERS

2.30.1 General

Instrument transformers shall comply with ANSI C12.11 and IEEE ANSI/IEEE C57.13. Instrument transformers shall be configured for mounting in/on the device to which they are applied. Polarity marks on instrument transformers shall be visually evident and shown on drawings.

2.30.2 Current Transformers

Unless otherwise indicated, bar, wound, or window-type transformers are acceptable; and except for window-type units installed over insulated buses, transformers shall have a BIL rating consistent with the rated BIL of the associated switchgear or electric power apparatus bushings, buses or conductors. Current transformers shall have the indicated ratios. The continuous thermal-current rating factor shall be not less than 2.0. Other thermal and mechanical ratings of current transformer and their primary leads shall be coordinated with the design of the circuit breaker and shall be not less than the momentary rating of the associated circuit breaker. Circuit protectors shall be provided across secondary leads of the current transformers to prevent the accidental open-circuiting of the transformers while energized. Each terminal of each current transformer shall be connected to a short-circuiting terminal block in the circuit interrupting mechanism cabinet, power transformer terminal cabinet, and in the associated instrument and relay cabinets.

2.30.2.1 Not Used

2.30.2.2 Not used

2.30.2.3 Not Used

2.30.2.4 Current Transformers for kWH and Demand Metering (Low Voltage)

Current transformers shall conform to IEEE ANSI/IEEE C57.13. Provide current transformers with a metering accuracy Class of 0.3 through B-1.8, with a minimum RF of 1.5 at 30 degrees C, with 600-volt insulation, and 10 kV BIL. Provide butyl-molded, window-type current transformers mounted in the current transformer cabinet integral to switchboard.

2.30.2.5 Not Used

2.31 WIRING DEVICES

NEMA WD 1 for wiring devices, and NEMA WD 6 for dimensional requirements of wiring devices.

2.32 Not Used

2.33 COORDINATED POWER SYSTEM PROTECTION

Analyses shall be prepared to demonstrate that the equipment and system constructed meet the specified requirements for equipment ratings, coordination, and protection. They shall include a load flow analysis, a fault current analysis, and protective device coordination study. The studies shall be performed by a registered professional engineer with demonstrated experience in power system coordination in the last three years. The Contractor shall provide a list of references complete with points of contact, addresses and telephone numbers. The selection of the engineer is subject to the approval of the Contracting Officer.

2.33.1 Scope of Analyses

The fault current analysis, and protective device coordination study shall begin at: the source bus and extend down to system buses where fault availability is 10,000 amperes (symmetrical) for building/facility 600 volt level distribution buses.

2.33.2 Determination of Facts

The time-current characteristics, features, and nameplate data for each existing protective device shall be determined and documented. The Contractor shall coordinate with the commercial power company for fault current availability at the site.

2.33.3 Single Line Diagram

A single line diagram shall be prepared to show the electrical system buses, devices, transformation points, and all sources of fault current (including generator and motor contributions). A fault-impedance diagram or a computer analysis diagram may be provided. Each bus, device or transformation point shall have a unique identifier. If a fault-impedance diagram is provide, impedance data shall be shown. Locations of switches, breakers, and circuit interrupting devices shall be shown on the diagram together with available fault data, and the device interrupting rating.

2.33.4 Fault Current Analysis

2.33.4.1 Method

The fault current analysis shall be performed in accordance with methods described in IEEE Std 242, and IEEE Std 399.

2.33.4.2 Data

Actual data shall be utilized in fault calculations. Bus characteristics and transformer impedances shall be those proposed. Data shall be documented in the report.

2.33.4.3 Fault Current Availability

Balanced three-phase fault, bolted line-to-line fault, and line-to-ground fault current values shall be provided at each voltage transformation point and at each power distribution bus. The maximum and minimum values of fault available at each location shall be shown in tabular form on the

diagram or in the report.

2.33.5 Coordination Study

The study shall demonstrate that the maximum possible degree of selectivity has been obtained between devices specified, consistent with protection of equipment and conductors from damage from overloads and fault conditions. The study shall include a description of the coordination of the protective devices in this project. Provide a written narrative that describes: which devices may operate in the event of a fault at each bus; the logic used to arrive at device ratings and settings; situation where system coordination is not achievable due to device limitations (an analysis of any device curves which order overlap); coordination between upstream and downstream devices; and relay settings. Recommendations to improve or enhance system reliability, and detail where such changes would involve additions or modifications to the contract and cost changes (addition or reduction) shall be provided. Composite coordination plots shall be provided on log-log graph paper.

2.33.6 Study Report

a. The report shall include a narrative: the analyses performed; the bases and methods used; and the desired method of coordinated protection of the power system.

b. The study shall include descriptive and technical data for existing devices and new protective devices proposed. The data shall include manufacturers published data, nameplate data, and definition of the fixed or adjustable features of the existing or new protective devices.

c. The report shall document utility company data including system voltages, fault MVA, system X/R ratio, time-current characteristic curves, current transformer ratios, and relay device curves and protective device ratings and settings.

d. The report shall contain fully coordinated composite time-current characteristic curves for each bus in the system, as required to ensure coordinated power system protection between protective devices or equipment. The report shall include recommended ratings and settings of all protective devices in tabulated form.

e. The report shall provide the calculations performed for the analyses, including computer analysis programs utilized. The name of the software package, developer, and version number shall be provided.

PART 3 EXECUTION

3.1 GROUNDING

Grounding shall be in conformance with NFPA 70, the contract drawings, and the following specifications.

3.1.1 Ground Rods

The resistance to ground shall be measured using the fall-of-potential method described in IEEE Std 81. The maximum resistance of a driven ground shall not exceed 25 ohms under normally dry conditions. If this resistance

cannot be obtained with a single rod, additional rods not less than 20 feet on centers may be coupled and driven with the first rod. In high-ground-resistance, UL listed chemically charged ground rods may be used. If the resultant resistance exceeds 25 ohms measured not less than 48 hours after rainfall, the Contracting Officer shall be notified immediately. Connections below grade shall be fusion welded. Connections above grade shall be fusion welded or shall use UL 467 approved connectors.

3.1.2 Not Used

3.1.3 Grounding Conductors

A green equipment grounding conductor, sized in accordance with NFPA 70 shall be provided, regardless of the type of conduit. Equipment grounding bars shall be provided in all panelboards. The equipment grounding conductor shall be carried back to the service entrance grounding connection or separately derived grounding connection. All equipment grounding conductors, including metallic raceway systems used as such, shall be bonded or joined together in each wiring box or equipment enclosure. Metallic raceways and grounding conductors shall be checked to assure that they are wired or bonded into a common junction. Metallic boxes and enclosures, if used, shall also be bonded to these grounding conductors by an approved means per NFPA 70. When boxes for receptacles, switches, or other utilization devices are installed, any designated grounding terminal on these devices shall also be bonded to the equipment grounding conductor junction with a short jumper.

3.2 WIRING METHODS

Wiring shall conform to NFPA 70, the contract drawings, and the following specifications. Unless otherwise indicated, wiring shall consist of insulated conductors installed in rigid zinc-coated steel conduit, rigid plastic conduit, electrical metallic tubingand intermediate metal conduit conduit as indicated and/or specified elsewhere. Where cables and wires are installed in cable trays, they shall be of the type permitted by NFPA 70 for use in such applications. Wire fill in conduits shall be based on NFPA 70 for the type of conduit and wire insulations specified. Wire fill in conduits located in Class I or II hazardous areas shall be limited to 25 percent of the cross sectional area of the conduit.

3.2.1 Conduit and Tubing Systems

Conduit and tubing systems shall be installed as indicated. Conduit sizes shown are based on use of copper conductors with insulation types as described in paragraph WIRING METHODS. Minimum size of raceways shall be 1/2 inch. Only metal conduits will be permitted when conduits are required for shielding or other special purposes indicated, or when required by conformance to NFPA 70. Nonmetallic conduit and tubing may be used in damp, wet or corrosive locations when permitted by NFPA 70 and the conduit or tubing system is provided with appropriate boxes, covers, clamps, screws or other appropriate type of fittings. Electrical metallic tubing (EMT) may be installed only within buildings. EMT may be installed in concrete and grout in dry locations. EMT installed in concrete or grout shall be provided with concrete tight fittings. EMT shall not be installed in damp or wet locations, or the air space of exterior masonry cavity walls. Bushings, manufactured fittings or boxes providing equivalent means of protection shall be installed on the ends of all conduits and shall be of the insulating type, where required by NFPA 70. Only UL listed adapters shall be used to connect EMT to rigid metal conduit, cast boxes, and

conduit bodies. Aluminum conduit may be used only where installed exposed in dry locations. Nonaluminum sleeves shall be used where aluminum conduit passes through concrete floors and firewalls. Penetrations of above grade floor slabs, time-rated partitions and fire walls shall be firestopped in accordance with Section 07270 FIRESTOPPING. Except as otherwise specified, IMC may be used as an option for rigid steel conduit in areas as permitted by NFPA 70. Raceways shall not be installed under the firepits of boilers and furnaces and shall be kept 6 inches away from parallel runs of flues, steam pipes and hot-water pipes. Raceways shall be concealed within finished walls, ceilings, and floors unless otherwise shown. Raceways crossing structural expansion joints or seismic joints shall be provided with suitable expansion fittings or other suitable means to compensate for the building expansion and contraction and to provide for continuity of grounding. Wiring installed in underfloor raceway system shall be suitable for installation in wet locations.

3.2.1.1 Pull Wires

A pull wire shall be inserted in each empty raceway in which wiring is to be installed if the raceway is more than 50 feet in length and contains more than the equivalent of two 90-degree bends, or where the raceway is more than 150 feet in length. The pull wire shall be of No. 14 AWG zinc-coated steel, or of plastic having not less than 200 pounds per square inch tensile strength. Not less than 10 inches of slack shall be left at each end of the pull wire.

3.2.1.2 Conduit Stub-Ups

Where conduits are to be stubbed up through concrete floors, a short elbow shall be installed below grade to transition from the horizontal run of conduit to a vertical run. A conduit coupling fitting, threaded on the inside shall be installed, to allow terminating the conduit flush with the finished floor. Wiring shall be extended in rigid threaded conduit to equipment, except that where required, flexible conduit may be used 6 inches above the floor. Empty or spare conduit stub-ups shall be plugged flush with the finished floor with a threaded, recessed plug.

3.2.1.3 Below Slab-on-Grade or in the Ground

Electrical wiring below slab-on-grade shall be protected by a conduit system. Conduit passing vertically through slabs-on-grade shall be rigid steel or IMC. Rigid steel or IMC conduits installed below slab-on-grade or in the earth shall be field wrapped with 0.010 inch thick pipe-wrapping plastic tape applied with a 50 percent overlay, or shall have a factory-applied polyvinyl chloride, plastic resin, or epoxy coating system.

3.2.1.4 Installing in Slabs Including Slabs on Grade

Conduit installed in slabs-on-grade shall be rigid steel or IMC. Conduits shall be installed as close to the middle of concrete slabs as practicable without disturbing the reinforcement. Outside diameter shall not exceed 1/3 of the slab thickness and conduits shall be spaced not closer than 3 diameters on centers except at cabinet locations where the slab thickness shall be increased as approved by the Contracting Officer. Where conduit is run parallel to reinforcing steel, the conduit shall be spaced a minimum of one conduit diameter away but not less than one inch from the reinforcing steel.

3.2.1.5 Changes in Direction of Runs

Changes in direction of runs shall be made with symmetrical bends or cast-metal fittings. Field-made bends and offsets shall be made with an approved hickey or conduit-bending machine. Crushed or deformed raceways shall not be installed. Trapped raceways in damp and wet locations shall be avoided where possible. Lodgment of plaster, dirt, or trash in raceways, boxes, fittings and equipment shall be prevented during the course of construction. Clogged raceways shall be cleared of obstructions or shall be replaced.

3.2.1.6 Supports

Metallic conduits and tubing,and the support system to which they are attached, shall be securely and rigidly fastened in place to prevent vertical and horizontal movement at intervals of not more than 10 feet and within 3 feet of boxes, cabinets, and fittings, with approved pipe straps, wall brackets, conduit clamps, conduit hangers, threaded C-clamps, beam clamps, or ceiling trapeze. Loads and supports shall be coordinated with supporting structure to prevent damage or deformation to the structure. Loads shall not be applied to joist bridging. Attachment shall be by wood screws or screw-type nails to wood; by toggle bolts on hollow masonry units; by expansion bolts on concrete or brick; by machine screws, welded threaded studs, heat-treated or spring-steel-tension clamps on steel work. Nail-type nylon anchors or threaded studs driven in by a powder charge and provided with lock washers and nuts may be used in lieu of expansion bolts or machine screws. Raceways or pipe straps shall not be welded to steel structures. Cutting the main reinforcing bars in reinforced concrete beams or joists shall be avoided when drilling holes for support anchors. Holes drilled for support anchors, but not used, shall be filled. In partitions of light steel construction, sheet-metal screws may be used. Raceways shall not be supported using wire or nylon ties. Raceways shall be independently supported from the structure. Upper raceways shall not be used as a means of support for lower raceways. Supporting means shall not be shared between electrical raceways and mechanical piping or ducts. Cables and raceways shall not be supported by ceiling grids. Except where permitted by NFPA 70, wiring shall not be supported by ceiling support systems. Conduits shall be fastened to sheet-metal boxes and cabinets with two locknuts where required by NFPA 70, where insulating bushings are used, and where bushings cannot be brought into firm contact with the box; otherwise, a single locknut and bushing may be used. Threadless fittings for electrical metallic tubing shall be of a type approved for the conditions encountered. Additional support for horizontal runs is not required when EMT rests on steel stud cutouts.

3.2.1.7 Exposed Raceways

Exposed raceways shall be installed parallel or perpendicular to walls, structural members, or intersections of vertical planes and ceilings. Raceways under raised floors and above accessible ceilings shall be considered as exposed installations in accordance with NFPA 70 definitions.

3.2.1.8 Exposed Risers

Exposed risers in wire shafts of multistory buildings shall be supported by U-clamp hangers at each floor level, and at intervals not to exceed 10 feet.

3.2.1.9 Exposed Lengths of Conduit, Over 600 Volts

Exposed lengths of conduit containing power conductors operating at more than 600 volts shall have two red bands 2 inches wide spaced 8 inches apart painted near each coupling; the intervening space between the red bands shall be painted white, and on the white space the voltage shall be stenciled in black: 120/208 volts.

3.2.1.10 Communications Raceways

Communications raceways indicated shall be installed in accordance with the previous requirements for conduit and tubing and with the additional requirement that no length of run shall exceed 50 feet for 1/2 inch and 3/4 inch sizes, and 100 feet for 1 inch or larger sizes, and shall not contain more than two 90-degree bends or the equivalent. Additional pull or junction boxes shall be installed to comply with these limitations whether or not indicated. Inside radii of bends in conduits of 1 inch size or larger shall not be less than ten times the nominal diameter.

3.2.2 Not Used

3.2.3 Cable Trays

Cable trays shall be supported in accordance with the recommendations of the manufacturer but at no more than 6 foot intervals. Contact surfaces of aluminum connections shall be coated with an antioxidant compound prior to assembly. Adjacent cable tray sections shall be bonded together by connector plates of an identical type as the cable tray sections. The Contractor shall submit the manufacturer's certification that the cable tray system meets all requirements of Article 318 of NFPA 70. The cable tray shall be installed and grounded in accordance with the provisions of Article 318 of NFPA 70. Data submitted by the Contractor shall demonstrate that the completed cable tray systems will comply with the specified requirements. Cable trays shall terminate 10 inches from both sides of smoke and fire partitions. Conductors run through smoke and fire partitions shall be installed in 4 inch rigid steel conduits with grounding bushings, extending 12 inches beyond each side of the partitions. The installation shall be sealed to preserve the smoke and fire rating of the partitions. Penetrations shall be firestopped in accordance with Section 07840 FIRESTOPPING.

3.2.4 Cables and Conductors

Installation shall conform to the requirements of NFPA 70. Covered, bare or insulated conductors of circuits rated over 600 volts shall not occupy the same equipment wiring enclosure, cable, or raceway with conductors of circuits rated 600 volts or less.

3.2.4.1 Sizing

Unless otherwise noted, all sizes are based on copper conductors and the insulation types indicated. Sizes shall be not less than indicated. Branch-circuit conductors shall be not smaller than No. 12 AWG. Conductors for branch circuits of 120 volts more than 100 feet long and of 277 volts more than 230 feet long, from panel to load center, shall be no smaller than No. 10 AWG. Class 1 remote control and signal circuit conductors shall be not less than No. 14 AWG. Class 2 remote control and signal circuit conductors shall be not less than No. 16 AWG. Class 3 low-energy, remote-control and signal circuits shall be not less than No. 22 AWG.

3.2.4.2 Not Used

3.2.4.3 Not Used

3.2.4.4 Not Used

3.2.4.5 Cable Splicing

Splices shall be made in an accessible location. Crimping tools and dies shall be approved by the connector manufacturer for use with the type of connector and conductor.

a. Copper Conductors, 600 Volt and Under: Splices in conductors No. 10 AWG and smaller diameter shall be made with an insulated, pressure-type connector. Splices in conductors No. 8 AWG and larger diameter shall be made with a solderless connector and insulated with tape or heat-shrink type insulating material equivalent to the conductor insulation.

b. Aluminum Conductors, 600 Volt and Under: Splices of aluminum conductors shall be made with a UL listed, solderless, compression-type, aluminum bodied connector, stamped for AL or AL/CU. Aluminum contact surfaces of conductors shall be cleaned with a wire brush and covered with anti-oxidant joint compound prior to making of connections. Any excess joint compound shall be wiped away after installing the connector. Insulate the connection with tape or heat-shrink type insulating material equivalent to the conductor insulation.

c. Greater Than 600 Volt: Cable splices shall be made in accordance with the cable manufacturer's recommendations and Section 16375 ELECTRICAL DISTRIBUTION SYSTEM, UNDERGROUND.

3.2.4.6 Conductor Identification and Tagging

Power, control, and signal circuit conductor identification shall be provided within each enclosure where a tap, splice, or termination is made. Where several feeders pass through a common pull box, the feeders shall be tagged to indicate clearly the electrical characteristics, circuit number, and panel designation. Phase conductors of low voltage power circuits shall be identified by color coding. Phase identification by a particular color shall be maintained continuously for the length of a circuit, including junctions.

a. Color coding shall be provided for service, feeder, branch, and ground conductors. Color shall be green for grounding conductors and white for neutrals; except where neutrals of more than one system are installed in the same raceway or box, other neutral shall be white with colored (not green) stripe. The color coding for 3-phase and single-phase low voltage systems shall be as follows:

   120/208-volt, 3-phase: Black(A), red(B), and blue(C).

b. Conductor phase and voltage identification shall be made by color-coded insulation for all conductors smaller than No. 6 AWG. For conductors No. 6 AWG and larger, identification shall be made by color-coded insulation, or conductors with black insulation may be furnished and identified by the use of half-lapped bands of colored electrical tape wrapped around the insulation for a

minimum of 3 inches of length near the end, or other method as submitted by the Contractor and approved by the Contracting Officer.

c. Control and signal circuit conductor identification shall be made by color-coded insulated conductors, plastic-coated self-sticking printed markers, permanently attached stamped metal foil markers, or equivalent means as approved. Control circuit terminals of equipment shall be properly identified. Terminal and conductor identification shall match that shown on approved detail drawings. Hand lettering or marking is not acceptable.

3.3 BOXES AND SUPPORTS

Boxes shall be provided in the wiring or raceway systems where required by NFPA 70 for pulling of wires, making connections, and mounting of devices or fixtures. Pull boxes shall be furnished with screw-fastened covers. Indicated elevations are approximate, except where minimum mounting heights for hazardous areas are required by NFPA 70. Unless otherwise indicated, boxes for wall switches shall be mounted 48 inches above finished floors. Switch and outlet boxes located on opposite sides of fire rated walls shall be separated by a minimum horizontal distance of 24 inches. The total combined area of all box openings in fire rated walls shall not exceed 100 square inches per 100 square feet. Maximum box areas for individual boxes in fire rated walls vary with the manufacturer and shall not exceed the maximum specified for that box in UL Elec Const Dir. Only boxes listed in UL Elec Const Dir shall be used in fire rated walls.

3.3.1 Box Applications

Each box shall have not less than the volume required by NFPA 70 for number of conductors enclosed in box. Boxes for metallic raceways, 4 by 4 inch nominal size and smaller, shall be of the cast-metal hub type when located in normally wet locations, when flush and surface mounted on outside of exterior surfaces, or when located in hazardous areas. Cast-metal boxes installed in wet locations and boxes installed flush with the outside of exterior surfaces shall be gasketed. Boxes for mounting lighting fixtures shall be not less than 4 inches square, or octagonal, except smaller boxes may be installed as required by fixture configuration, as approved. Cast-metal boxes with 3/32 inch wall thickness are acceptable. Large size boxes shall be NEMA 1 or as shown. Boxes in other locations shall be sheet steel except that aluminum boxes may be used with aluminum conduit, and nonmetallic boxes may be used with nonmetallic conduit and tubing or nonmetallic sheathed cable system, when permitted by NFPA 70. Boxes for use in masonry-block or tile walls shall be square-cornered, tile-type, or standard boxes having square-cornered, tile-type covers.

3.3.2 Brackets and Fasteners

Boxes and supports shall be fastened to wood with wood screws or screw-type nails of equal holding strength, with bolts and metal expansion shields on concrete or brick, with toggle bolts on hollow masonry units, and with machine screw or welded studs on steel work. Threaded studs driven in by powder charge and provided with lockwashers and nuts, or nail-type nylon anchors may be used in lieu of expansion shields, or machine screws. Penetration of more than 1-1/2 inches into reinforced-concrete beams or more than 3/4 inch into reinforced-concrete joists shall avoid cutting any main reinforcing steel. The use of brackets which depend on gypsum wallboard or plasterboard for primary support will not be permitted. In

partitions of light steel construction, bar hangers with 1 inch long studs, mounted between metal wall studs or metal box mounting brackets shall be used to secure boxes to the building structure. When metal box mounting brackets are used, additional box support shall be provided on the side of the box opposite the brackets. This additional box support shall consist of a minimum 12 inch long section of wall stud, bracketed to the opposite side of the box and secured by two screws through the wallboard on each side of the stud. Metal screws may be used in lieu of the metal box mounting brackets.

3.3.3 Mounting in Walls, Ceilings, or Recessed Locations

In walls or ceilings of concrete, tile, or other non-combustible material, boxes shall be installed so that the edge of the box is not recessed more than 1/4 inch from the finished surface. Boxes mounted in combustible walls or ceiling material shall be mounted flush with the finished surface. The use of gypsum or plasterboard as a means of supporting boxes will not be permitted. Boxes installed for concealed wiring shall be provided with suitable extension rings or plaster covers, as required. The bottom of boxes installed in masonry-block walls for concealed wiring shall be mounted flush with the top of a block to minimize cutting of the blocks, and boxes shall be located horizontally to avoid cutting webs of block. Separate boxes shall be provided for flush or recessed fixtures when required by the fixture terminal operating temperature, and fixtures shall be readily removable for access to the boxes unless ceiling access panels are provided.

3.3.4 Installation in Overhead Spaces

In open overhead spaces, cast-metal boxes threaded to raceways need not be separately supported except where used for fixture support; cast-metal boxes having threadless connectors and sheet metal boxes shall be supported directly from the building structure or by bar hangers. Hangers shall not be fastened to or supported from joist bridging. Where bar hangers are used, the bar shall be attached to raceways on opposite sides of the box and the raceway shall be supported with an approved type fastener not more than 24 inches from the box.

3.4 DEVICE PLATES

One-piece type device plates shall be provided for all outlets and fittings. Plates on unfinished walls and on fittings shall be of zinc-coated sheet steel, cast-metal, or impact resistant plastic having rounded or beveled edges. Plates on finished walls shall be of steel with baked enamel finish or impact-resistant plastic and with color as selected by architect. Screws shall be of metal with countersunk heads, in a color to match the finish of the plate. Plates shall be installed with all four edges in continuous contact with finished wall surfaces without the use of mats or similar devices. Plaster fillings will not be permitted. Plates shall be installed with an alignment tolerance of 1/16 inch. The use of sectional-type device plates will not be permitted. Plates installed in wet locations shall be gasketed and provided with a hinged, gasketed cover, unless otherwise specified.

3.5 RECEPTACLES

3.5.1 Single and Duplex, 15 or 20-ampere, 125 volt

Single and duplex receptacles shall be rated 20 amperes, 125 volts,

two-pole, three-wire, grounding type with polarized parallel slots. Bodies shall be of as indicated by government, and supported by mounting strap having plaster ears. Contact arrangement shall be such that contact is made on two sides of an inserted blade. Receptacle shall be side- or back-wired with two screws per terminal. The third grounding pole shall be connected to the metal mounting yoke. Switched receptacles shall be the same as other receptacles specified except that the ungrounded pole of each suitable receptacle shall be provided with a separate terminal. Only the top receptacle of a duplex receptacle shall be wired for switching application. Receptacles with ground fault circuit interrupters shall have the current rating as indicated, and shall be UL Class A type unless otherwise shown. Ground fault circuit protection shall be provided as required by NFPA 70 and as indicated on the drawings. Shall be ivory in color.

3.5.2 Not Used

3.5.3 Floor Outlets

Floor outlets shall be adjustable and each outlet shall consist of a cast-metal body with threaded openings for conduits, adjustable ring, and cover plate with 1/2 inch or 3/4 inch threaded flush plug. Each telephone outlet shall consist of a horizontal cast housing with a receptacle as specified. Gaskets shall be used where necessary to ensure a watertight installation. Plugs with installation instructions shall be delivered to the Contracting Officer at the job site for capping outlets upon removal of service fittings. Shall be identical to model used in Phase II.

3.5.4 Weatherproof Applications

Weatherproof receptacles shall be suitable for the environment, damp or wet as applicable, and the housings shall be labeled to identify the allowable use. Receptacles shall be marked in accordance with UL 514A for the type of use indicated; "Damp locations", "Wet Locations", "Wet Location Only When Cover Closed". Assemblies shall be installed in accordance with the manufacturer's recommendations.

3.5.4.1 Damp Locations

Receptacles in damp locations shall be mounted in an outlet box with a gasketed, weatherproof, cast-metal cover plate (device plate, box cover) and a gasketed cap (hood, receptacle cover) over each receptacle opening. The cap shall be either a screw-on type permanently attached to the cover plate by a short length of bead chain or shall be a flap type attached to the cover with a spring loaded hinge.

3.5.4.2 Wet Locations

Receptacles in wet locations shall be installed in an assembly rated for such use whether the plug is inserted or withdrawn, unless otherwise indicated. In a duplex installation, the receptacle cover shall be configured to shield the connections whether one or both receptacles are in use. Assemblies which utilize a self-sealing boot or gasket to maintain wet location rating shall be furnished with a compatible plug at each receptacle location and a sign notifying the user that only plugs intended for use with the sealing boot shall be connected during wet conditions.

3.5.5 Receptacles, 15-Ampere, 250-Volt

Receptacles, 15-ampere, 250-volt, shall be single two-pole, three-wire, grounding type with bodies of as indicated by government to match color of switch handles in the same room or to harmonize with the color of the respective wall], phenolic compound supported by mounting yoke having plaster ears. The third grounding pole shall be connected to the metal yoke. Each receptacle shall be provided with a mating cord-grip plug.

3.5.6 Receptacles, 20-Ampere, 250-Volt

Receptacles, single, 20-ampere, 250-volt, shall be as indicated by government molded plastic, two-pole, three-wire or three-pole, four-wire, grounding type complete with appropriate mating cord-grip plug.

3.5.7 Receptacles, 30-Ampere, 125/250-Volt

Receptacles, single, 30-ampere, 125/250-volt, shall be molded-plastic, three-pole, four-wire, grounding type, complete with appropriate mating cord-grip type attachment plug. Each dryer receptacle shall be furnished with a non-detachable power supply cord for connection to the electric clothes dryer. The cord shall be an angle-type 36 inch length of Type SRD range and dryer cable with three No. 10 AWG conductors.

3.5.8 Receptacles, 30-Ampere, 250-Volt

Receptacles, single, 30-ampere, 250-volt, shall be molded-plastic, three-pole, three-wire type, complete with appropriate mating cord-grip plug.

3.5.9 Receptacles, 50-Ampere, 125/250-Volt

Receptacles, single 50-ampere, 125/250-volt, shall be flush, molded plastic, three-pole, four-wire, grounding type. Each range receptacle shall be furnished with a nondetachable power supply cord for connection to the electric range. The cord shall be an angle-type 36 inch length of SRD range and dryer cable with one No. 8 and two No. 6 AWG conductors.

3.5.10 Receptacles, 50-Ampere, 250-Volt

Receptacles, single, 50-ampere, 250-volt, shall be flush molded plastic, three-pole, three-wire type, complete with appropriate mating cord-grip plug.

3.6 WALL SWITCHES

Wall switches shall be of the totally enclosed tumbler type. The wall switch handle and switch plate color shall be ivory. Wiring terminals shall be of the screw type or of the solderless pressure type having suitable conductor-release arrangement. Not more than two switches shall be installed in a single-gang position. Switches shall be rated 20-ampere 120-volt for use on alternating current only. Pilot lights indicated shall consist of yoke-mounted candelabra-base sockets rated at 75 watts, 125 volts, and fitted with glass or plastic jewels. A clear 6-watt lamp shall be furnished and installed in each pilot switch. Jewels for use with switches controlling motors shall be green, and jewels for other purposes shall be red. Dimming switches shall be solid-state flush mounted, sized for the loads.

3.7 SERVICE EQUIPMENT

Service-disconnecting means shall be of the POWER SWITCHGEAR ASSEMBLIES INCLUDING SWITCHBOARDS with an external handle for manual operation. When service disconnecting means is a part of an assembly, the assembly shall be listed as suitable for service entrance equipment. Enclosures shall be sheet metal with hinged cover for surface mounting unless otherwise indicated.

3.8 PANELBOARDS AND LOADCENTERS

Circuit breakers and switches used as a motor disconnecting means shall be capable of being locked in the open position. Door locks shall be keyed alike. Nameplates shall be as approved. Directories shall be typed to indicate loads served by each circuit and mounted in a holder behind a clear protective covering. Busses shall be copper or] aluminum.

3.8.1 Panelboards

Panelboards shall be circuit breaker equipped as indicated on the drawings.

3.9 FUSES

Equipment provided under this contract shall be provided with a complete set of properly rated fuses when the equipment manufacturer utilize fuses in the manufacture of the equipment, or if current-limiting fuses are required to be installed to limit the ampere-interrupting capacity of circuit breakers or equipment to less than the maximum available fault current at the location of the equipment to be installed. Fuses shall have a voltage rating of not less than the phase-to-phase circuit voltage, and shall have the time-current characteristics required for effective power system coordination. Time-delay and non-time-delay options shall be as specified.

3.9.1 Cartridge Fuses; Noncurrent-Limiting Type

Cartridge fuses of the noncurrent-limiting type shall be Class H, nonrenewable, dual element, time lag type and shall have interrupting capacity of 10,000 amperes. At 500 percent current, cartridge fuses shall not blow in less than 10 seconds.

3.9.2 Cartridge Fuses; Current-Limiting Type

Cartridge fuses, current-limiting type, Class J or RK1 shall have tested interrupting capacity not less than 100,000 amperes. Fuse holders shall be the type that will reject all Class H fuses.

3.9.3 Not Used

3.9.4 Motor and Transformer Circuit Fuses

Motor, motor controller, transformer, and inductive circuit fuses shall be Class RK1 or RK5, current-limiting, time-delay with 200,000 amperes interrupting capacity.

3.10 UNDERGROUND SERVICE

Unless otherwise indicated, interior conduit systems shall be stubbed out 5 feet beyond the building wall and 2 feet below finished grade, for interface with the exterior service lateral conduits [and exterior

communications conduits]. Outside conduit ends shall be bushed when used for direct burial service lateral conductors. Outside conduit ends shall be capped or plugged until connected to exterior conduit systems. Underground service lateral conductors will be extended to building service entrance and terminated in accordance with the requirements of Section 16375 ELECTRICAL DISTRIBUTION SYSTEM, UNDERGROUND and NFPA 70.

3.11 Not Used

3.12 MOTORS

Each motor shall conform to the hp and voltage ratings indicated, and shall have a service factor and other characteristics that are essential to the proper application and performance of the motors under conditions shown or specified. Three-phase motors for use on 3-phase 208-volt systems shall have a nameplate rating of 200 volts. Unless otherwise specified, all motors shall have open frames, and continuous-duty classification based on a 40 degree C ambient temperature reference. Polyphase motors shall be squirrel-cage type, having normal-starting-torque and low-starting-current characteristics, unless other characteristics are specified in other sections of these specifications or shown on contract drawings. The Contractor shall be responsible for selecting the actual horsepower ratings and other motor requirements necessary for the applications indicated. When electrically driven equipment furnished under other sections of these specifications materially differs from the design, the Contractor shall make the necessary adjustments to the wiring, disconnect devices and branch-circuit protection to accommodate the equipment actually installed.

3.13 MOTOR CONTROL

Each motor or group of motors requiring a single control shall be provided under other sections of these specifications with a suitable controller and devices that will perform the functions as specified for the respective motors. Each motor of 1/8 hp or larger shall be provided with thermal-overload protection. Polyphase motors shall have overload protection in each ungrounded conductor. The overload-protection device shall be provided either integral with the motor or controller, or shall be mounted in a separate enclosure. Unless otherwise specified, the protective device shall be of the manually reset type. Single or double pole tumbler switches specifically designed for alternating-current operation only may be used as manual controllers for single-phase motors having a current rating not in excess of 80 percent of the switch rating. Automatic control devices such as thermostats, float or pressure switches may control the starting and stopping of motors directly, provided the devices used are designed for that purpose and have an adequate horsepower rating. When the automatic-control device does not have such a rating, a magnetic starter shall be used, with the automatic-control device actuating the pilot-control circuit. When combination manual and automatic control is specified and the automatic-control device operates the motor directly, a double-throw, three-position tumbler or rotary switch shall be provided for the manual control; when the automatic-control device actuates the pilot control circuit of a magnetic starter, the latter shall be provided with a three-position selector switch marked MANUAL-OFF-AUTOMATIC. Connections to the selector switch shall be such that only the normal automatic regulatory control devices will be bypassed when the switch is in the Manual position; all safety control devices, such as low- or high-pressure cutouts, high-temperature cutouts, and motor-overload protective devices, shall be connected in the motor-control circuit in both

the Manual and the Automatic positions of the selector switch. Control circuit connections to any MANUAL-OFF-AUTOMATIC switch or to more than one automatic regulatory control device shall be made in accordance with wiring diagram approved by the Contracting Officer unless such diagram is included on the drawings. All controls shall be 120 volts or less unless otherwise indicated.

3.13.1 Not Used

3.13.2 Not Used

3.13.3 Contacts

Unless otherwise indicated, contacts in miscellaneous control devices such as float switches, pressure switches, and auxiliary relays shall have current and voltage ratings in accordance with NEMA ICS 2 for rating designation B300.

3.13.4 Safety Controls

Safety controls for boilers shall be connected to a 2-wire, 120 volt grounded circuit supplied from the associated boiler-equipment circuit. Where the boiler circuit is more than 120 volts to ground, safety controls shall be energized through a two-winding transformer having its 120 volt secondary winding grounded. Overcurrent protection shall be provided in the ungrounded secondary conductor and shall be sized for the load encountered.

3.14 MOTOR-DISCONNECT MEANS

Each motor shall be provided with a disconnecting means when required by NFPA 70 even though not indicated. For single-phase motors, a single or double pole toggle switch, rated only for alternating current, will be acceptable for capacities less than 30 amperes, provided the ampere rating of the switch is at least 125 percent of the motor rating. Switches shall disconnect all ungrounded conductors.

3.15 TRANSFORMER INSTALLATION

Three-phase transformers shall be connected only in a delta-wye or wye-delta configuration as indicated . "T" connections may be used for transformers rated at 15 kVA or below. Dry-type transformers shown located within 5 feet of the exterior wall shall be provided in a weatherproof enclosure. Transformers to be located within the building may be provided in the manufacturer's standard, ventilated indoor enclosure designed for use in 40 degrees C ambient temperature, unless otherwise indicated.

3.16 LAMPS AND LIGHTING FIXTURES

Ballasted fixtures shall have ballasts which are compatible with the specific type and rating of lamps indicated and shall comply with the applicable provisions of the publications referenced.

3.16.1 Lamps

Lamps of the type, wattage, and voltage rating indicated shall be delivered to the project in the original cartons and installed in the fixtures just prior to the completion of the project.

3.16.1.1 Incandescent

Incandescent lamps shall be for 125-volt operation unless otherwise indicated.

3.16.1.2 Fluorescent

Fluorescent lamps for electronic ballasts shall be as indicated.

3.16.1.3 High-Intensity-Discharge

High-intensity-discharge lamps shall be the high-pressure sodium type unless otherwise indicated, shown, or approved.

3.16.2 Fixtures

Fixtures shall be as shown and shall conform to the following specifications and shall be as indicated in the fixture schedule, which accompany and form a part of this specification for the types indicated. Illustrations shown on these sheets are indicative of the general type desired and are not intended to restrict selection to fixtures of any particular manufacturer. Fixtures of similar designs and equivalent energy efficiency, light distribution and brightness characteristics, and of equal finish and quality will be acceptable if approved.

3.16.2.1 Accessories

Accessories such as straps, mounting plates, nipples, or brackets shall be provided for proper installation. Open type fluorescent fixtures with exposed lamps shall have a wire-basket type guard.

3.16.2.2 Suspended Fixtures

Suspended fixtures shall be provided with swivel hangers in order to ensure a plumb installation. Pendants, rods, or chains 4 feet or longer excluding fixture, shall be braced to limit swinging. Bracing shall be 3 directional, 120 degrees apart. Single unit suspended fluorescent fixtures shall have twin-stem hangers. Multiple unit or continuous-row fluorescent units shall have a tubing or stem for wiring at one point, and a tubing or rod suspension provided for each length of chassis including one at each end. Maximum distance between adjacent tubing or stems shall be 10 feet. Rods shall be of not less than 3/16 inch diameter. Flexible raceway shall be installed to each fixture from an overhead junction box. Fixture to fixture wiring installation is allowed only when fixtures are installed end to end in a continuous run.

3.16.2.3 Ceiling Fixtures

Ceiling fixtures shall be coordinated with and suitable for installation in, on, or from the suspended ceiling provided under other sections of these specifications. Installation and support of fixtures shall be in accordance with the NFPA 70 and manufacturer's recommendations. Recessed fixtures shall have adjustable fittings to permit alignment with ceiling panels. Recessed fixtures installed in fire-resistive type of suspended ceiling construction shall have the same fire rating as the ceiling or shall be provided with fireproofing boxes having materials of the same fire rating as the ceiling panels, in conformance with UL Elec Const Dir. Surface-mounted fixtures shall be suitable for fastening to the structural support for ceiling panels.

3.16.2.4 Sockets

Sockets of industrial, strip, and other open type fluorescent fixtures shall be of the type requiring a forced movement along the longitudinal axis of the lamp for insertion and removal of the lamp.

3.16.3 Not Used

3.17 Not Used

3.18 EQUIPMENT CONNECTIONS

Wiring not furnished and installed under other sections of the specifications for the connection of electrical equipment as indicated on the drawings shall be furnished and installed under this section of the specifications. Connections shall comply with the applicable requirements of paragraph WIRING METHODS. Flexible conduits 6 feet or less in length shall be provided to all electrical equipment subject to periodic removal, vibration, or movement and for all motors. All motors shall be provided with separate grounding conductors. Liquid-tight conduits shall be used in damp or wet locations.

3.18.1 Motors and Motor Control

Motors, motor controls, and motor control centers shall be installed in accordance with NFPA 70, the manufacturer's recommendations, and as indicated. Wiring shall be extended to motors, motor controls, and motor control centers and terminated.

3.18.2 Installation of Government-Furnished Equipment

Wiring shall be extended to the equipment and terminated.

3.18.3 Food Service Equipment Provided Under Other Sections

Wiring shall be extended to the equipment and terminated.

3.19 CIRCUIT PROTECTIVE DEVICES

The Contractor shall calibrate, adjust, set and test each new adjustable circuit protective device to ensure that they will function properly prior to the initial energization of the new power system under actual operating conditions.

3.20 PAINTING AND FINISHING

Field-applied paint on exposed surfaces shall be provided under Section 09900 PAINTING, GENERAL.

3.21 Not Used

3.22 FIELD TESTING

Field testing shall be performed in the presence of the Contracting Officer. The Contractor shall notify the Contracting Officer 14 days prior to conducting tests. The Contractor shall furnish all materials, labor,

and equipment necessary to conduct field tests. The Contractor shall perform all tests and inspection recommended by the manufacturer unless specifically waived by the Contracting Officer. The Contractor shall maintain a written record of all tests which includes date, test performed, personnel involved, devices tested, serial number and name of test equipment, and test results. All field test reports will be signed and dated by the Contractor.

3.22.1 Safety

The Contractor shall provide and use safety devices such as rubber gloves, protective barriers, and danger signs to protect and warn personnel in the test vicinity. The Contractor shall replace any devices or equipment which are damaged due to improper test procedures or handling.

3.22.2 Ground-Resistance Tests

The resistance of each grounding electrode system shall be measured using the fall-of-potential method defined in IEEE Std 81. Soil resistivity in the area of the grid shall be measured concurrently with the grid measurements. Ground resistance measurements shall be made before the electrical distribution system is energized and shall be made in normally dry conditions not less than 48 hours after the last rainfall. Resistance measurements of separate grounding electrode systems shall be made before the systems are bonded together below grade. The combined resistance of separate systems may be used to meet the required resistance, but the specified number of electrodes must still be provided.

a. Single rod electrode - 25 ohms.

b. Grid electrode - 15 ohms.

3.22.3 Ground-Grid Connection Inspection

All below-grade ground-grid connections will be visually inspected by the Contracting Officer before backfilling. The Contractor shall notify the Contracting Officer 48 hours before the site is ready for inspection.

3.22.4 Cable Tests

The Contractor shall be responsible for identifying all equipment and devices that could be damaged by application of the test voltage and ensuring that they have been properly disconnected prior to performing insulation resistance testing. An insulation resistance test shall be performed on all low and medium voltage cables after the cables are installed in their final configuration and prior to energization. The test voltage shall be 500 volts DC applied for one minute between each conductor and ground and between all possible combinations of conductors. The minimum value of resistance shall be:

R in megohms = (rated voltage in kV + 1) x 1000/(length of cable in feet)

Each cable failing this test shall be repaired or replaced. The repaired cable system shall then be retested until failures have been eliminated.

3.22.4.1 Not Used

3.22.4.2 Low Voltage Cable Tests

a. Continuity test.

b. Insulation resistance test.

3.22.5 Not Used

3.22.6 Motor Tests

a. Phase rotation test to ensure proper directions.

b. Operation and sequence of reduced voltage starters.

c. High potential test on each winding to ground.

d. Insulation resistance of each winding to ground.

e. Vibration test.

f. Dielectric absorption test on motor [and starter].

3.22.7 Not Used

3.22.8 Dry-Type Transformer Tests

The following field tests shall be performed on all dry-type transformers 150 kVA and above.

a. Insulation resistance test phase-to-ground, each phase.

b. Turns ratio test.

3.22.9 Circuit Breaker Tests

The following field tests shall be performed on all switchboardcircuit breakers.

3.22.9.1 Not Used

3.22.9.2 Not Used

3.22.9.3 Circuit Breakers, Molded Case

a. Insulation resistance test phase-to-phase, all combinations.

b. Insulation resistance test phase-to-ground, each phase.

c. Closed breaker contact resistance test.

d. Manual operation of the breaker.

3.22.10 Not Used

3.22.11 Not Used

3.23 OPERATING TESTS

After the installation is completed, and at such time as the Contracting Officer may direct, the Contractor shall conduct operating tests for approval. The equipment shall be demonstrated to operate in accordance with the specified requirements. An operating test report shall be submitted in accordance with paragraph FIELD TEST REPORTS.

3.24 FIELD SERVICE

3.24.1 Onsite Training

The Contractor shall conduct a training course for the operating staff as designated by the Contracting Officer. The training period shall consist of a total of 8 hours of normal working time and shall start after the system is functionally completed but prior to final acceptance tests. The course instruction shall cover pertinent points involved in operating, starting, stopping, servicing the equipment, as well as all major elements of the operation and maintenance manuals..

3.24.2 Installation Engineer

After delivery of the equipment, the Contractor shall furnish one or more field engineers, regularly employed by the equipment manufacturer to supervise the installation of equipment, assist in the performance of the onsite tests, oversee initial operations, and instruct personnel as to the operational and maintenance features of the equipment.

3.25 ACCEPTANCE

Final acceptance of the facility will not be given until the Contractor has successfully completed all tests and after all defects in installation, material or operation have been corrected.

-- End of Section --

SECTION TABLE OF CONTENTS

DIVISION 16 - ELECTRICAL

SECTION 16485

VARIABLE FREQUENCY DRIVE

mm/yy

PART 1 GENERAL

1.1 SUBMITTALS
1.2 WARRANTY

PART 2 PRODUCTS

2.1 Manufacures
2.2 PARTS AND PERFORMANCE
2.3 WIRING AND CONTROL I/O
2.4 ENCLOSURES
2.5 COMBINATION CONTROLLERS

PART 3 EXECUTION

3.1 INSPECTION, INSTALLATION AND TESTING

-- End of Section Table of Contents --

SECTION 16485

VARIABLE FREQUENCY DRIVE
mm/yy

PART 1 GENERAL

1.1 SUBMITTALS

Government approval is required for submittals with a "GA" designation; submittals having an "FIO" designation are for information only. The following shall be submitted in accordance with Section 01330 SUBMITTAL PROCEDURES:

SD-01 Data

Maunfactures Shop Drawings; "GA".

Provide standard manufacturers cutsheets for all equipment supplied showing dimensional, construction, wiring diagrams, and rating data. Submit shop drawings as described in section 01330.

Provide job specific equipment layout drawings showing overall equipment dimensions, and internal wiring diagrams for each type of VFD starter. Text explaining details of information to be submitted.

1.2 WARRANTY

Contractor shall Guarantee all equipment and the labor required to install equipment for a period of one year .

PART 2 PRODUCTS

2.1 Manufacures

Variable frequency drives shall be similar to a Allen Bradley 1336 Plus II, Square D class 8839 Type ATV-56 or equal.

2.2 PARTS AND PERFORMANCE

The drive(s) shall be capable of operating from a 208 volt, 3-phase, 60 Hz voltage source without the use of an isolation transformer. Each adjustable frequency drive shall be rated for the driven equipment. Drive supplier shall be responsible for providing KVA information required to size the drive properly.

The adjustable frequency drive(s) shall be designed with the following features:

1. The drive inverter shall be a high efficiency, low impedance, voltage source design utilizing a Pulse Width Modulation (PWM) system that uses third generation IGBTs to minimize audible motor noise and increase overall performance. Drive(s) which utilize Current Source Inverters (CSI) and Variable Voltage Inverters (VVI) are not acceptable.

2. The drive(s) shall have independently adjustable acceleration and declination rates.

3. Drives shall be designed to have an efficiency of 97% or greater.

4. Drive shall be designed to shut-down with no component failure in the event of an output phase to phase or phase to ground short circuit and provide annunciation of the fault condition.

5. The drive shall be selectable for variable or constant torque. When selected for constant torque, the drive shall supply 150% of rated current for up to one minute. When selected for variable torque, the drive shall supply 115% of rated current for up to one minute.

6. The drive shall have a K-factor of 4.0 or less.

7. Drive shall have an interface panel consisting an integral display to show drive operating conditions, adjustments, fault conditions and programming keypad. Display shall be a backlit LCD capable of displaying at least 2 lines of 16 alphanumeric characters.

8. Drive shall have multiple programmable stop modes including: ramp, coast, brake, and S-curve.

9. Drive shall have an adjustable frequency output of up to 400 hertz.

10. Drive shall have adapters to allow communication via remote I/O to PLC's and a RS-232/422/485 port.

11. Enclosure shall be designed to dissipate the heat generated by the drive from 0ø to 40øC normal ambient operating temperature.

C. Drive shall include the following standard adjustments.

1. Volts per hertz adjustment: drive programming shall provide the ability to fully configure the volts per hertz for squared, cubed, straight line or full custom patterns.

2. Current limit: drive shall provide programmable current limit from 20% to 150% of constant torque rating.

3. Acceleration/Deceleration: shall be provided to allow adjustment from 0 to 600 seconds.

4. Speed Regulation shall be provide for the following modes:
   a. Closed loop encoder feedback with 1% regulation.
   b. Slip compensated with 0.5% speed regulation.
   c. Droop - Negative slip compensated.
   d. Transverse Function.
   e. Phase lock loop.
   f. Open loop.

D. Drive shall have an autocommisioning feature to determine motor's stator resistance.

E. Drive shall provide selectable range for offsetting the motor losses at low operating frequencies. compensation shall be provided by a DC boost which is current regulated and automatically adjusts on each start. DC boost shall be programmable from 15% to 120% of drive rated current.

F. Drive shall stop and restart on all fault conditions except ground fault and shorted output faults. Fault reset/run function shall be programmable with up to five automatic restarts allowed before locking out and requiring a manual restart. Time between automatic restarts shall be adjustable.

G. Drive shall have the capability of locking out certain frequencies which may produce mechanical resonance conditions. The setpoints shall have an adjustable bandwidth of 0Hz to 30Hz.

H. A fault memory shall be provided to store the last few faults as well as operating frequencies and drive status. Information shall be maintained even during a power loss.

I. Drive shall provide overload protection in accordance with NEC and UL standard 991. Overload protection shall be speed sensitive and adjustable for motors with speed ranges of 2:1, 4:1, and 10:1.

J. Drive shall be capable of determining the speed and direction of a spinning motor and adjusting its output to pick-up the motor at rotating speed.

K. Drive shall be capable of control logic ride through in the event of a power outage of up to 2 seconds in duration.

L. In the event of a loss of reference control signal, such as 4 to 20 mA input, the drive shall have user programmable options as follows:

1. Fault and stop.
2. Alarm and maintain last reference within +/- 10%.
3. Alarm and go to preset speed.
4. Alarm and go to maximum speed.
5. Alarm and go to minimum speed.

2.3 WIRING AND CONTROL I/O

A. Terminal blocks shall be provided for all control and power wiring into and out of the drive.

B. A separate control input terminal block shall be provided for wiring to remote start, stop, remote speed control, reference access, and enable inputs. Additional programmable inputs shall be provided. All inputs shall be programmable to configure the drive for standard, 3-wire, 2-wire, EC and serial operation.

2.4 ENCLOSURES

Enclosures shall be ANSI/NEMA ICS 6, Type 1.

2.5 COMBINATION CONTROLLERS

A. All VFD controllers shall be combination units mounted in a common enclosure with fused disconnect switches interlocked with enclosure cover to disallow entry into enclosure without de-energizing controller.

Fusible Switch Assemblies shall be NEMA type KS 1, enclosed knife switch with externally operable handle. Fuse clips shall be designed to accommodate Class R or S fuses. Operating handle shall give positive visual indication of ON-OFF with a color coded operating handle.

Disconnect shall have a mechanical interlock mechanism to prevent unauthorized entry into the enclosure unless the disconnect is in the OFF position. A defeating mechanism shall be provided to allow authorized personnel to enter the energized enclosure.

PART 3 EXECUTION

3.1 INSPECTION, INSTALLATION AND TESTING

A. Install motor controllers where indicated, in accordance with manufacturer's instructions.

B. Install motor controllers plumb. Provide supports in accordance with Section 16415.

C. Mount enclosure such that the height to the operating handle is 6'-6" above finished floor.

D. Install fuses in fusible switches per Section 16415. Fuses shall meet manufacturers requirements to allow for combination rating of drive per UL-5080 and short circuit rating shown on drawing.

E. Provide engraved plastic nameplates under the provisions of Section 16415.

F. Mechanical contractor shall be responsible for programming VFD's used in HVAC applications..

-- End of Section --

SECTION TABLE OF CONTENTS

DIVISION 16 - ELECTRICAL

SECTION 16528

EXTERIOR LIGHTING INCLUDING SECURITY AND CCTV APPLICATIONS

02/95

PART 1 GENERAL

1.1 REFERENCES
1.2 SYSTEM DESCRIPTION
1.2.1 Lighting System
1.2.2 Not Used
1.2.3 Electrical Requirements
1.2.4 Power Line Surge Protection
1.2.5 Not Used
1.2.6 Not Used
1.2.7 Nameplates
1.2.8 Standard Products
1.2.9 Not Used
1.2.10 Not Used
1.2.11 Not Used
1.3 CORROSION PROTECTION
1.3.1 Aluminum Materials
1.3.2 Ferrous Metal Materials
1.3.2.1 Hardware
1.3.2.2 Equipment
1.3.3 Finishing
1.4 SUBMITTALS

PART 2 PRODUCTS

2.1 STANDARD PRODUCT
2.2 Not Used
2.3 CABLE
2.3.1 Insulated Cable
2.4 Not Used
2.5 CABLE SPLICES AND CONNECTORS
2.6 Not Used
2.7 Not Used
2.8 CONDUIT, DUCTS AND FITTINGS
2.8.1 Conduit, Rigid Steel
2.8.2 Not Used
2.8.3 Conduit Fittings and Outlets
2.8.3.1 Boxes, Metallic Outlets
2.8.3.2 Boxes, Nonmetallic, Outlet and Flush-Device Boxes and Covers
2.8.3.3 Boxes, Outlet for Use in Hazardous (Classified) Locations
2.8.3.4 Boxes, Switch (Enclosed), Surface Mounted
2.8.3.5 Fittings for Conduit and Outlet Boxes
2.8.3.6 Not Used
2.8.3.7 Fittings, PVC, for Use with Rigid PVC Conduit and Tubing
2.8.4 Non-Metallic Duct
2.9 Not Used

2.10 GROUND RODS
2.11 POLES
2.11.1 Not Used
2.11.2 Not Used
2.11.3 Not Used
2.11.4 Not Used
2.11.5 Not Used
2.11.6 Anchor Bolts
2.12 Not Used
2.13 Not Used
2.14 Not Used
2.14.1 Interior Enclosures
2.15 ILLUMINATION
2.15.1 General Lighting
2.16 LAMPS AND BALLASTS, HIGH INTENSITY DISCHARGE (HID) SOURCES
2.16.1 High-Pressure Sodium
2.16.2 Not Used
2.16.3 Metal-Halide
2.17 Not Used
2.18 Not Used
2.19 LUMINAIRE COMPONENTS
2.20 LIGHTING CONTROL EQUIPMENT
2.20.1 Not Used
2.20.2 Timer Control Switches
2.20.3 Not Used
2.20.4 Not Used
2.20.5 Magnetic Contactor
2.21 PHOTOMETRIC DISTRIBUTION CLASSIFICATION
2.22 LUMINAIRES, FLOODLIGHTING
2.22.1 HID and Incandescent
2.23 FIXTURES
2.23.1 Accessories
2.23.2 Not Used
2.23.3 In-Line Fuse
2.24 Not Used
2.25 Not Used
2.26 Not Used
2.27 Not Used
2.28 Not Used

PART 3 EXECUTION

3.1 GENERAL
3.1.1 Current Site Conditions
3.1.2 Not Used
3.2 Not Used
3.3 PREVENTION OF CORROSION
3.3.1 Aluminum
3.3.2 Steel Conduits
3.3.3 Cold Galvanizing
3.4 CABLE INSTALLATION
3.4.1 Splices
3.4.2 Not Used
3.4.3 Not Used
3.4.4 Not Used
3.5 Not Used
3.6 Not Used
3.7 Not Used
3.8 Not Used

3.9 Not Used
3.9.1 Not Used
3.9.2 Not Used
3.9.3 Not Used
3.9.4 Not Used
3.9.5 Installation of Couplings
3.9.5.1 Plastic Duct
3.9.6 Not Used
3.9.7 Not Used
3.10 Not Used
3.11 Not Used
3.12 LIGHTING
3.12.1 Lamps
3.12.2 Fixture Installation
3.12.2.1 Accessories
3.12.2.2 In-Line Fuses
3.13 Not Used
3.14 LIGHTING CONTROL SYSTEM
3.14.1 Not Used
3.14.2 Time Control Switches
3.14.3 Magnetic Contactors
3.15 GROUNDING
3.15.1 Ground Rods and Pole Butt Electrodes
3.15.2 Items to be Grounded
3.15.3 Not Used
3.15.4 Not Used
3.16 TESTS
3.16.1 Not Used
3.16.2 Operating Test
3.16.3 Ground Resistance Measurements

-- End of Section Table of Contents --

SECTION 16528

EXTERIOR LIGHTING INCLUDING SECURITY AND CCTV APPLICATIONS
02/95

PART 1 GENERAL

1.1 REFERENCES

The publications listed below form a part of this specification to the extent referenced. The publications are referred to in the text by basic designation only.

AMERICAN ASSOCIATION OF STATE HIGHWAY AND TRANSPORTATION OFFICIALS (AASHTO)

AASHTO LTS-3	(1994) Standard Specifications for Structural Supports for Highway Signs, Luminaires and Traffic Signals

AMERICAN NATIONAL STANDARDS INSTITUTE (ANSI)

ANSI C78.1350	(1990) Electric Lamps - 400-Watt, 100-Volt, S51 Single-Ended High-Pressure Sodium Lamps
ANSI C78.1351	(1989) Electric Lamps - 250-Watt, 100-Volt S50 Single-Ended High-Pressure Sodium Lamps
ANSI C78.1352	(1990) Electric Lamps - 1000-Watt, 250-Volt, S52 Single-Ended High-Pressure Sodium Lamps
ANSI C78.1355	(1989) Electric Lamps - 150-Watt, 55-Volt S55 High-Pressure Sodium Lamps
ANSI C78.1375	(1990; R 1996) 400-Watt, M59 Single-Ended Metal-Halide Lamps
ANSI C78.1376	(1990; R 1996) 1000-Watt, M47 Metal-Halide Lamps
ANSI C80.1	(1995) Rigid Steel Conduit - Zinc Coated
ANSI C82.4	(1992) Ballasts for High-Intensity-Discharge and Low-Pressure Sodium Lamps (Multiple-Supply Type)
ANSI C119.1	(1986) Sealed Insulated Underground Connector Systems Rated 600 Volts
ANSI C136.2	(1985) Luminaires, Voltage Classification of

ANSI C136.3	(1989) Luminaire Attachments - for Roadway Lighting Equipment
ANSI C136.6	(1990) Roadway Lighting Equipment - Metal Heads and Reflector Assemblies - Mechanical and Optical Interchangeability
ANSI C136.9	(1990) Roadway Lighting Equipment - Socket Support Assemblies for Use in Metal Heads - Mechanical Interchangeability
ANSI C136.11	(1988; R 1994) Multiple Sockets for Roadway Lighting Equipment
ANSI C136.15	(1986) High-Intensity-Discharge and Low-Pressure Sodium Lamps in Luminaires - Field Identification

AMERICAN SOCIETY FOR TESTING AND MATERIALS (ASTM)

ASTM A 123	(1989a) Zinc (Hot-Dip Galvanized) Coatings on Iron and Steel Products
ASTM A 153	(1996) Zinc Coating (Hot-Dip) on Iron and Steel Hardware
ASTM B 117	(1995) Operating Salt Spray (Fog) Apparatus
ASTM D 1654	(1992) Evaluation of Painted or Coated Specimens Subjected to Corrosive Environments

ILLUMINATING ENGINEERING SOCIETY OF NORTH AMERICA (IESNA)

IESNA RP-8	(1983; R 1993) Roadway Lighting

INSTITUTE OF ELECTRICAL AND ELECTRONICS ENGINEERS (IEEE)

IEEE C2	(1997) National Electrical Safety Code
IEEE C62.41	(1991) Surge Voltages in Low-Voltage AC Power Circuits
IEEE Std 81	(1983) Guide for Measuring Earth Resistivity, Ground Impedance, and Earth Surface Potentials of a Ground System

NATIONAL ELECTRICAL MANUFACTURERS ASSOCIATION (NEMA)

NEMA 250	(1991) Enclosures for Electrical Equipment (1000 Volts Maximum)
NEMA ICS 1	(1993) Industrial Control and Systems
NEMA ICS 2	(1993) Industrial Control and Systems Controllers, Contactors, and Overload Relays Rated Not More Than 2,000 Volts AC or 750 Volts DC Assemblies

NEMA ICS 6	(1993) Industrial Control and Systems, Enclosures
NEMA OS 1	(1989) Sheet-Steel Outlet Boxes, Device Boxes, Covers, and Box Supports
NEMA OS 2	(1986; Errata Aug 1986; R 1991) Nonmetallic Outlet Boxes, Device Boxes, Covers and Box Supports
NEMA TC 6	(1990) PVC and ABS Plastic Utilities Duct for Underground Installation
NEMA TC 9	(1990) Fittings for ABS and PVC Plastic Utilities Duct for Underground Installation

NATIONAL FIRE PROTECTION ASSOCIATION (NFPA)

NFPA 70	(1996; Errata) National Electrical Code

UNDERWRITERS LABORATORIES (UL)

UL 6	(1997) Rigid Metal Conduit
UL 44	(1997; Rev Aug 1997) Rubber-Insulated Wires and Cables
UL 98	(1994; Rev Oct 1995) Enclosed and Dead-Front Switches
UL 467	(1993; Rev Aug 1996) Grounding and Bonding Equipment
UL 486A	(1991; Rev Oct 1991) Wire Connectors and Soldering Lugs for Use with Copper Conductors
UL 486B	(1997; Rev Jun 1997) Wire Connections for Use with Aluminum Conductors
UL 514A	(1996) Metallic Outlet Boxes
UL 514B	(1996) Fittings for Conduit and Outlet Boxes
UL 514C	(1996) Nonmetallic Outlet Boxes, Flush-Device Boxes, and Covers
UL 651	(1995; Rev Jan 1997) Schedule 40 and 80 Rigid PVC Conduit
UL 651A	(1995; Rev Sep 1996) Type EB and A Rigid PVC Conduit and HDPE Conduit
UL 854	(1996; Rev May 1996) Service-Entrance Cables
UL 886	(1994; Rev thru Jan 1997) Outlet Boxes and Fittings for Use in Hazardous (Classified)

	Locations
UL 1029	(1994; Rev Sep 1995) High-Intensity-Discharge Lamp Ballasts
UL 1449	(1985; Errata Apr 1986) Transient Voltage Surge Suppressors
UL 1571	(1991; Rev thru Mar 1995) Incandescent Lighting Fixtures
UL 1572	(1995; Rev thru Jun 1997) High Intensity Discharge Lighting Fixtures

1.2 SYSTEM DESCRIPTION

1.2.1 Lighting System

The lighting system shall be configured as specified and shown. The system shall include all fixtures, hardware, poles, cables, connectors, adapters and appurtenances needed to provide a fully functional lighting system.

1.2.2 Not Used

1.2.3 Electrical Requirements

The equipment shall operate from a voltage source as shown, plus or minus 10 percent, and 60 Hz, plus or minus 2 percent.

1.2.4 Power Line Surge Protection

Transient voltage surge suppressors shall be provided for all electronic equipment. Surge suppressors shall meet the requirements of IEEE C62.41, and be UL listed as having been tested in accordance with UL 1449. Surge suppressor ratings shall be 120/208 volts rms, operating voltage; 60 Hz; 1-phase3-phase; 4 wire with ground; transient suppression voltage (peak let-through-voltage) of 350 volts]. Fuses shall not be used as surge suppression.

1.2.5 Not Used

1.2.6 Not Used

1.2.7 Nameplates

Each major component of equipment shall have a nonferrous metal or engraved plastic nameplate which shall show, as a minimum, the manufacturer's name and address, the catalog or style number, the electrical rating in volts, and the capacity in amperes or watts.

1.2.8 Standard Products

Materials and equipment shall be standard products of manufacturer regularly engaged in the manufacture of such products. Items of equipment shall essentially duplicate equipment that has been in satisfactory use at least 2 years prior to bid opening.

1.2.9 Not Used

1.2.10 Not Used

1.2.11 Not Used

1.3 CORROSION PROTECTION

1.3.1 Aluminum Materials

Aluminum shall not be used in contact with earth or concrete. Where aluminum conductors are connected to dissimilar metal, fittings conforming to UL 486B shall be used.

1.3.2 Ferrous Metal Materials

1.3.2.1 Hardware

Ferrous metal hardware shall be hot-dip galvanized in accordance with ASTM A 153 and ASTM A 123.

1.3.2.2 Equipment

Equipment and component items, including but not limited to metal poles and ferrous metal luminaires not hot-dip galvanized or porcelain enamel finished, shall be provided with corrosion-resistant finishes which shall withstand 120 hours of exposure to the salt spray test specified in ASTM B 117 without loss of paint or release of adhesion of the paint primer coat to the metal surface in excess of 1/16 inch from the test mark. The scribed test mark and test evaluation shall have a rating of not less than 7 in accordance with TABLE 1, (procedure A) of ASTM D 1654. Cut edges or otherwise damaged surfaces of hot-dip galvanized sheet steel or mill galvanized sheet steel shall be coated with a zinc rich paint conforming to the manufacturer's standard.

1.3.3 Finishing

Painting required for surfaces not otherwise specified and finish painting of items only primed at the factory, shall be as specified in Section 09900 PAINTING, GENERAL.

1.4 SUBMITTALS

Government approval is required for submittals with a "GA" designation; submittals having an "FIO" designation are for information only. The following shall be submitted in accordance with section 01330 SUBMITTAL PROCEDURES:

SD-01 Data

Equipment and Materials; GA.

Data published by the manufacturer of each item on the list of equipment and material, to permit verification that the item proposed is of the correct size, properly rated or applied, or is otherwise suitable for the application and fully conforms to the requirements specified.

Spare Parts; FIO.

Spare parts data for each item of material and equipment specified, after approval of detail drawings for materials and equipment, and not later than

4 months before the date of beneficial occupancy. The data shall include a complete list of parts, special tools, and supplies, with current unit prices and sources of supply.

SD-04 Drawings

Lighting System; GA1.

Detail drawings for the complete system and for poles, lighting fixtures,handholes, and controllers,. Detail drawings for precast handholes shall include a design analysis to determine that strength is equivalent to indicated cast-in-place concrete handholes. Drawings shall indicate bonding method for concrete encasement. Drawings shall include design calculations showing adequate strength of screw foundations.
As-Built Drawings; GA1.

Final as-built drawings shall be finished drawings on mylar or vellum and shall be delivered with the final test report.

Operating Test; GA.

Test procedures and reports for the Operating Test. After receipt by the Contractor of written approval of the test procedures, the Contractor shall schedule the tests. The final test procedures report shall be delivered after completion of the tests.

Ground Resistance Measurements; GA1.

The measured resistance to ground of each separate grounding installation, indicating the location of the rods, the resistance of the soil in ohms per millimeter and the soil conditions at the time the measurements were made. The information shall be in writing.

SD-19 Operation and Maintenance Manuals

Lighting System; GA.

A draft copy of the operation and maintenance manuals, prior to beginning the tests for use during site testing. Final copies of the manuals as specified bound in hardback, loose-leaf binders, within 30 days after completing the field test. The draft copy used during site testing shall be updated with any changes required, prior to final delivery of the manuals. Each manual's contents shall be identified on the cover. The manual shall include names, addresses, and telephone numbers of each subcontractor installing equipment and systems, and nearest service representatives for each item of equipment for each system. The manuals shall have a table of contents and tab sheets. Tab sheets shall be placed at the beginning of each chapter or section and at the beginning of each appendix. The final copies delivered after completion of the field test shall include modifications made during installation checkout and acceptance.

PART 2 PRODUCTS

2.1 STANDARD PRODUCT

Material and equipment shall be the standard product of a manufacturer regularly engaged in the manufacture of the product and shall essentially duplicate items that have been in satisfactory use for at least 2 years

prior to bid opening. Items of the same classification shall be identical including equipment, assemblies, parts, and components.

2.2 Not Used

2.3 CABLE

The Contractor shall provide all wire and cable not indicated as government furnished equipment. Wire and cable components shall be able to withstand the jobsite environment for a minimum of 20 years.

2.3.1 Insulated Cable

Cable shall be type USE conforming to UL 854, with copper conductors and type RHW or XHHW insulation conforming to UL 44, and shall include green ground conductor. Cable shall be provided with insulation of a thickness not less than that given in column A of TABLE 15.1 of UL 854. Cable shall be rated 600 volts. Parts of the cable system such as splices and terminations shall be rated not less than 600 volts. The size and number of conductors and the number of cables shall be as indicated. Conductors larger than No. 8 AWG shall be stranded.

2.4 Not Used

2.5 CABLE SPLICES AND CONNECTORS

Cable splices and connectors shall conform to UL 486A. Underground splices and connectors shall also conform to the requirements of ANSI C119.1.

2.6 Not Used

2.7 Not Used

2.8 CONDUIT, DUCTS AND FITTINGS

2.8.1 Conduit, Rigid Steel

Rigid steel conduit shall conform to ANSI C80.1 and UL 6.

2.8.2 Not Used

2.8.3 Conduit Fittings and Outlets

2.8.3.1 Boxes, Metallic Outlets

NEMA OS 1 and UL 514A.

2.8.3.2 Boxes, Nonmetallic, Outlet and Flush-Device Boxes and Covers

NEMA OS 2 and UL 514C.

2.8.3.3 Boxes, Outlet for Use in Hazardous (Classified) Locations

UL 886.

2.8.3.4 Boxes, Switch (Enclosed), Surface Mounted

UL 98.

2.8.3.5 Fittings for Conduit and Outlet Boxes

UL 514B.

2.8.3.6 Not Used2.8.3.7 Fittings, PVC, for Use with Rigid PVC Conduit and Tubing

UL 514B.

2.8.4 Non-Metallic Duct

Non-metallic duct lines and fittings utilized for underground installation shall be suitable for the application. Duct shall be thick-wall, single, round-bore type. Material of one type shall be used. Acrylonitrile-butadiene-styrene (ABS) duct shall conform to NEMA TC 6and NEMA TC 9. High-density conduit shall conform to UL 651A. Schedule 40 polyvinyl chloride (PVC) shall conform to UL 651. Plastic utility duct and fittings manufactured without a UL label or listing shall be provided with a certification as follows: "The materials are suitable for use with 167 degree F wiring. No reduction of properties in excess of that specified for materials with a UL label or listing will be experienced if samples of the finished product are operated continuously under the normal conditions that produce the highest temperature in the duct."

2.9 Not Used

2.10 GROUND RODS

Ground rods shall be of copper clad steel conforming to UL 467 not less than [5/8] [3/4] inch in diameter by [8] [10] feet in length of the sectional type driven full length into earth.

2.11 POLES

Poles shall be the pole manufacturer's standard design for supporting the number of fixtures indicated. Poles shall be designed for a wind velocity of 100 mph at the base of the pole, for a wind gust factor of 1.3, and for the height and drag factors recommended by AASHTO LTS-3. The effective projected area of luminaires and other pole-mounted devices shall be taken into account in pole design. Poles shall have grounding provisions. The type of pole shaft material provided shall not be mixed on any project. Grounding connection shall be provided near the bottom of each metal pole and at each concrete pole anchor base. Scratched, stained, chipped, or dented poles shall not be installed.

2.11.1 Not Used

2.11.2 Not Used

2.11.3 Not Used

2.11.4 Not Used

2.11.5 Not Used

2.11.6 Anchor Bolts

Anchor bolts shall be the pole manufacturer's standard, but not less than necessary to meet the pole wind and ice loading, herein and other specified

design requirements.

2.12 Not Used

2.13 Not Used

2.14 Not Used

2.14.1 Interior Enclosures

Enclosures to house lighting equipment in an interior environment shall meet the requirements of a NEMA 1 enclosure as defined in NEMA 250.

2.15 ILLUMINATION

2.15.1 General Lighting

Luminaires, ballasts, lamps, and control devices required for general area and parking lot lighting shall be as indicated on the drawings.

2.16 LAMPS AND BALLASTS, HIGH INTENSITY DISCHARGE (HID) SOURCES

2.16.1 High-Pressure Sodium

Lamps shall conform to ANSI C78.1350, ANSI C78.1351, ANSI C78.1352 or ANSI C78.1355 as required. Ballasts shall conform to ANSI C82.4, or UL 1029. High-pressure sodium lamps shall be clear.

2.16.2 Not Used

2.16.3 Metal-Halide

Lamps shall be made by a manufacturer with not less than 5 years experience in making metal-halide lamps. Metal-halide lamps shall conform to ANSI C78.1375 or ANSI C78.1376. Ballasts shall conform to ANSI C82.4 or UL 1029.

2.17 Not Used

2.18 Not Used

2.19 LUMINAIRE COMPONENTS

Luminaire components shall conform to the following: attachments, ANSI C136.3; voltage classification, ANSI C136.2; field identification marking, ANSI C136.15; interchangeability, ANSI C136.6 and ANSI C136.9; and sockets, ANSI C136.11.

2.20 LIGHTING CONTROL EQUIPMENT

2.20.1 Not Used

2.20.2 Timer Control Switches

Astronomic dial type arranged to turn "ON" at sunset, and turn "OFF" at a pre-determined time between 2030 hours and 230 hours or sunrise, automatically changing the settings each day in accordance with seasonal changes of sunset and sunrise shall be provided. A switch rated 240 volts, having battery backed electronic clock to maintain accurate time for a minimum of 7 hours following a power failure shall be provided. A time

switch with a manual on-off bypass switch shall be provided. Housing for the time switch shall be a surface mounted, NEMA 1 (indoor) enclosure conforming to NEMA ICS 6.

2.20.3 Not Used

2.20.4 Not Used

2.20.5 Magnetic Contactor

Magnetic contactors shall be mechanically held, electrically operated, and shall conform to NEMA ICS 1 and NEMA ICS 2. The contactor shall be suitable for 208 volts, 3 phase, 60 Hz. Coil voltage shall be 120 volts. Maximum continuous ampere rating and number of poles shall be as indicated on drawings. Enclosures for contactors mounted indoors shall be NEMA ICS 6, Type 1. Each contactor shall be provided with a spare, normally open auxiliary contact. Terminal lugs shall be coordinated with the wire size.

2.21 PHOTOMETRIC DISTRIBUTION CLASSIFICATION

Photometrics shall conform to IESNA RP-8.

2.22 LUMINAIRES, FLOODLIGHTING

2.22.1 HID and Incandescent

HID lighting fixtures shall conform to UL 1572. Incandescent lighting fixtures shall conform to UL 1571.

2.23 FIXTURES

Standard fixtures shall be as indicated on the drawings. Illustrations shown on these sheets or on the drawings are indicative of the general type desired and are not intended to restrict selection to fixtures of any particular manufacturer. Fixtures of similar design, equivalent light distribution and brightness characteristics, equal finish and quality will be acceptable as approved.

2.23.1 Accessories

Accessories such as straps, mounting plates, nipples, or brackets shall be provided for proper installation.

2.23.2 Not Used

2.23.3 In-Line Fuse

An in-line fuse shall be provided for each fixture, and shall consist of a fuse and a UL approved waterproof fuse holder rated at 30 amperes, 600 volts, with insulated boots. Fuse rating shall be 250 volts.

2.24 Not Used

2.25 Not Used

2.26 Not Used

2.27 Not Used
2.28 Not Used

PART 3 EXECUTION

3.1 GENERAL

The Contractor shall install all system components, including government furnished equipment, and appurtenances in accordance with the manufacturer's instructions, IEEE C2, and contract documents, and shall furnish necessary hardware, fixtures, cables, wire, connectors, interconnections, services, and adjustments required for a complete and operable system.

3.1.1 Current Site Conditions

The Contractor shall verify that site conditions are in agreement with the design package. The Contractor shall report all changes to the site or conditions that will affect performance of the system to the Government. The Contractor shall not take any corrective action without written permission from the Government.

3.1.2 Not Used

3.2 Not Used

3.3 PREVENTION OF CORROSION

3.3.1 Aluminum

Aluminum shall not be used in contact with earth or concrete, and where connected to dissimilar metal, shall be protected by approved fittings and treatment.

3.3.2 Steel Conduits

Steel conduits shall not be installed within concrete slabs-on-grade. Steel conduits installed underground or under slabs-on-grade, or penetrating slabs-on-grade, shall be field wrapped with 0.010 inch thick pipe-wrapping plastic tape applied with a 50 percent overlap, or shall have a factory-applied plastic resin, epoxy coating. Zinc coating may be omitted from steel conduit which has a factory-applied epoxy coating.

3.3.3 Cold Galvanizing

Field welds and/or brazing on factory galvanized boxes, enclosures, conduits, etc. shall be coated with a cold galvanized paint containing at least 95 percent zinc by weight.

3.4 CABLE INSTALLATION

Cable and all parts of the cable system such as splices and terminations shall be rated not less than 600 volts. The size and number of conductors and the number of cables shall be as indicated. Conductors larger than No. 8 AWG shall be stranded. Each circuit shall be identified by means of fiber or nonferrous metal tags, or approved equal, in each handhole and at each terminal.

3.4.1 Splices

Splices below grade shall be made with nonpressure-filled resin systems using transparent, interlocking, self-venting, longitudinally split plastic

molds. Splices above grade shall be made with sealed insulated pressure connectors and shall provide insulation and jacket equal to that of the cable. In order to prevent moisture from entering the splice, jackets shall be cut back to expose the required length of insulation between the jacket and the tapered end of the insulation.

3.4.2 Not Used

3.4.3 Not Used

3.4.4 Not Used

3.5 Not Used

3.6 Not Used

3.7 Not Used

3.8 Not Used

3.9 Not Used

3.9.1 Not Used

3.9.2 Not Used

3.9.3 Not Used

3.9.4 Not Used

3.9.5 Installation of Couplings

Joints in each type of duct shall be made up in accordance with the manufacturer's recommendation for the particular type of duct and coupling selected and as approved.

3.9.5.1 Plastic Duct

Duct joints shall be made by brushing a plastic solvent on insides of plastic coupling fittings and on outsides of duct ends. Each duct and fitting shall then be slipped together with a quick 1/4 turn to set the joint tightly.

3.9.6 Not Used

3.9.7 Not Used

3.10 Not Used

3.11 Not Used

3.12 LIGHTING

3.12.1 Lamps

Lamps of the proper type, wattage, and voltage rating shall be delivered to the project in the original containers and installed in the fixtures just before completion of the project.

3.12.2 Fixture Installation

Standard fixtures shall be installed as indicated on drawings. Illustrations shown on these sheets or on the drawings are indicative of the general type desired and are not intended to restrict selection of fixtures to any particular manufacturer. Fixtures of similar design, equivalent light-distribution and brightness characteristics, and equal finish and quality will be acceptable as approved.

3.12.2.1 Accessories

Accessories such as straps, mounting plates, nipples, or brackets shall be installed as required for proper installation.

3.12.2.2 In-Line Fuses

An in-line fuse shall be provided for each fixture.

3.13 Not Used3.14 LIGHTING CONTROL SYSTEM

3.14.1 Not Used

3.14.2 Time Control Switches

Switches shall be installed with not less than four 1/4 inch bolts. The use of sheet metal screws will not be allowed.

3.14.3 Magnetic Contactors

Terminal lugs shall be coordinated with the wire size. Switches shall be securely fastened to the supporting structure or wall using not less than four 1/4 inch bolts. The use of sheet metal screws will not be allowed.

3.15 GROUNDING

Grounding shall be in conformance with NFPA 70, the contract drawings, and the following. Grounding conductors shall be soft-drawn, stranded copper. Ground rods shall be driven into the earth so that after the installation is complete, the top of the ground rod will be approximately 1 foot below finished grade, except in handholes. Butt grounds shall not be used.

3.15.1 Ground Rods and Pole Butt Electrodes

The resistance to ground shall be measured using the fall-of-potential method described in IEEE Std 81. The maximum resistance of a [driven ground rodpole butt electrode shall not exceed 25 ohms under normally dry conditions. Whenever the required ground resistance is not met, additional electrodes shall be provided interconnected with grounding conductors, to achieve the specified ground resistance. The additional electrodes shall be up to three, 10 feet long rods spaced a minimum of 10 feet apart, 5/8 nch] in diameter, driven perpendicular to grade. If the resultant resistance exceeds 25 ohms measured not less than 48 hours after rainfall, the Contracting Officer shall be notified immediately. Connections below grade shall be fusion welded. Connections above grade shall be fusion welded or shall use UL 467 approved connectors.

3.15.2 Items to be Grounded

Ground conductors, metallic conduits, junction boxes, and noncurrent-carrying metallic parts of equipment shall be grounded. Connections above grade shall be made with solderless connectors, and those below grade shall be made by a fusion-welding process.

3.15.3 Not Used

3.15.4 Not Used

3.16 TESTS

3.16.1 Not Used3.16.2 Operating Test

After the installation is completed and at such time as the Contracting Officer may direct, the Contractor shall conduct an operating test for approval. The equipment shall be demonstrated to operate in accordance with the requirements specified. The test shall be performed in the presence of the Contracting Officer. The Contractor shall furnish instruments and personnel required for the test, and the Government will furnish the necessary electric power.

3.16.3 Ground Resistance Measurements

The resistance to ground shall be measured by the fall-of-potential method described in IEEE Std 81.

The contractor shall maintain a separate set of drawings, elementary diagrams and wiring diagrams of the lighting to be used for "as-built" drawings. This set shall be accurately kept up to date by the Contractor with all changes and additions to the lighting system. In addition to being complete and accurate, this set of drawings shall be kept neat and shall not be used for installation purposes. Upon completion of the as-built drawings, a representative of the Government will review the as-built work with the Contractor. If the as-built work is not complete, the Contractor will be so advised and shall complete the work as required.

-- End of Section --

SECTION TABLE OF CONTENTS

DIVISION 16 - ELECTRICAL

SECTION 16536

EMERGENCY BATTERY INVERTER SYSTEM

mm/yy

PART 1 GENERAL

1.1 System Description
1.2 SUBMITTALS
1.3 Warranty

PART 2 PRODUCTS

2.1 MANUFACTURESE
2.2 CATEGORY AND TYPE
2.3 OPERATION
2.4 INPUT VOLTAGE
2.5 OUTPUT VOLTAGE
2.6 SYSTEM DIAGNOSTICS
2.7 ALARMS
2.8 MANUAL AND PROGRAMMABLE TESTING
2.9 BATTERY CHARGER
2.10 BATTERIES
2.11 ILS SYSTEM OPTIONS
2.12 ILS SYSTEM ACCESSORIES
2.13 MECHANICAL

PART 3 EXECUTION

3.1 WIRING
3.2 SYSTEM OPERATION
3.3 CONNECTED LOADS
3.4 FACTORY STARTUP
3.5 INSTALLATION
3.6 MAINTENANCE AND SERVICE

-- End of Section Table of Contents --

SECTION 16536

EMERGENCY BATTERY INVERTER SYSTEM
mm/yy

PART 1 GENERAL

1.1 System Description

An Integrated Life Safety (ILS) or (EPS) System shall be furnished to provide a reliable source of power and shall operate during a utility line deficiency without any interruptions of power supplied to the load. The transfer from utility power to battery power shall utilize a true no-break, sine wave output system to maintain a zero transfer time. The system shall be capable of powering any combination of electronic ballast, power factor corrected ballast, and self-ballasted fluorescent, incandescent of HID lighting, building management systems, and any other critical emergency or frequency-sensitive electronic loads. The systems shall be operate loads at 0.5 lagging to 0.5 leading from 0-100% loading and be rated to deliver its full KW rating at unity power factor. Upon return of the normal AC utility line power, the system shall recharge the batteries within 24 hours without any interruptions of power supplied to the load. Upon an inverter failure, the load shall automatically connect to the Ac utility line. Line power shall constantly pass through the ferroresonant transformer to provide continuous, on-line conditioned power.

1.2 SUBMITTALS

Government approval is required for submittals with a "GA" designation; submittals having an "FIO" designation are for information only. The following shall be submitted in accordance with Section 01330 SUBMITTAL PROCEDURES:

SD-01 Data

Manufactures Shop Drawings; "GA1".

Provide manufactures cutsheets for all equipment supplied showing dimensions, construction, wiring diagrams, and related data. Submit shop drawings as descriped in section 01330.

SD-02 Manuals

Installation manuals; "FIO"

Installation Manual(s) with complete instructions for locating, mounting, interconnection and wiring of the system.

SD-03

User ManualsSD-; "FIO"

User Manual(s) outlining complete operating and preventive maintenance procedures.

1.3 Warranty

The ILS System shall be guaranteed, under normal and proper use, against defects in workmanship and materials for a period of two years from the date of shipment. Batteries supplied as part of ILS Systems shall be covered under a separate pro-rata warranty as described below.

Standard Lead-Calcium: Type S - One year full replacement warranty plus and additional nine years pro-rata.

PART 2 PRODUCTS

2.1 MANUFACTURESE

The Integrated Life Safety (ILS) System specified herein shall be a Series 300 as manufactured by Liebert. Unit shall be identical to unit in existing Phase II building.

2.2 CATEGORY AND TYPE

Furnish and install a ILS System that will supply a minimum of 7.5 KW at 60 Hz for a period of 1 and 1/2 hours upon interruption, brownout, or failure of the monitored AC utility line.

2.3 OPERATION

The system, utilizing a ferroresonant transformer with a soft start circuit and surge protection devices, shall maintain a 2000-1 spike attenuation and meet ANSI/EEE C62.41 and C52.45 tests in both Category A and Category B.

The system's automatic-overload and short circuit protection of the inverter in normal and emergency operations shall consist of 150% momentary surge capability and 110% overload for 10 minutes. The system protection shall also include a low-battery voltage disconnect. The system shall supply a sinusoidal output waveform with 5% or less total harmonic distortion at rated load. Dynamic brownout protection will maintain the desired voltage without continuously switching to batteries in low voltage situations.

The continuous run circuitry is designed to run as long as the batteries retain sufficient capacity. Units that shut down due to thermal runaway or programmed time limits are not acceptable.

The system shall consist of circuitry including an automatic, multi-rate, software-controlled charger: self-diagnostic, programmable system testing capabilities with automatic recording of test results; a microprocessor-controlled, removable, diagnostic display panel capable of audible alarms and visual displays with automatic recording of all alarm and inverter events: a DC to AC converter (inverter); AC and DC input protection; a battery-bank sized for the system's runtime requirements and full KW rating at unity power factor; and an RS232 communication interface with selectable transmission rates of 50 to 38,400 baud.

2.4 INPUT VOLTAGE

The input voltage on the ILS system shall be 208 volts, +15 to -20%, 3 phase, 4 wire with a frequency of 60 Hz. The system shall have an AIC rating of 42,000 RMS symmetrical amperes.

2.5 OUTPUT VOLTAGE

The output voltage(s) to the Spectron ILS System shall be a sine wave, 120 volts, +5 to - 8.3%, 1 phase, 2 wire with a frequency of 60 Hz ñ 0.05 Hz on inverter. The frequency output on utility AC power shall be as supplied by the utility.

2.6 SYSTEM DIAGNOSTICS

The system's display panel shall include an array of LED lights, a 16-character display, and a color-coded keypad to control and monitor the system. The array of LED lights shall monitor the AC utility presence (green), system ready status (green), battery charging status (green), battery emergency operation (amber), and alarm functions (red). The system shall provide for the displaying of over 150 system parameters, operating codes, alarms, and acknowledgment of alarms. To ensure only authorized personnel can operate the unit, the system shall be password protected for all control functions, including parameter changes. The system will have the capability to display 21 meter functions including: output AC current, input and output AC voltage, volt-amp output, volt-amp limit, battery current and voltage, full load percentage, system test results, total number of power outages, overloads, inverter minutes, and minutes the system has been on. The system shall be completely microprocessor-controlled.

2.7 ALARMS

The system shall have 21 audible and visual alarms with automatic logging of the 20 most recent alarm events. Each alarm will have a corresponding Morse Code audible signal associated with it to aid in the troubleshooting of the system. The system's alarm acknowledge feature shall enable the user to silence only the current audible alarm(s) while not silencing other alarms and not clearing the alarming condition until the fault has been cleared. Alarms shall monitor low, near low, and high battery voltage, high AC voltage input, high and low AC voltage output, volt-amp output overload, low runtimeleft, high ambient, heatsink, transformer, and power-factor module temperature, temperature probe missing check charger battery, inverter and memory logic, emergency power off activated, user test check, circuit breaker tripped, and call service.

2.8 MANUAL AND PROGRAMMABLE TESTING

The ILS System shall incorporate a manual test function and three automatic test modes. The user shall be able to perform a system test at any time. The system shall also perform a programmable, weekly, self-diagnostic test of its subsystems to insure the system will operate in an emergency condition, a monthly test for a user programmable discharge time of 5 minutes (5-minute default), and an annual test for a complete runtime discharge of 90 minutes (90-minute default). Automatic recording in memory of the last 20 inverter events, including all automatic weekly and user programmed tests, shall be logged.

2.9 BATTERY CHARGER

The software-controlled, three-step charger with equalize shall charge the batteries continuously during the normal utility line condition in one of two distinct modes - float or hysteresis. Immediately following a return to the normal utility power, the charger shall automatically soft start to recharge the batteries at a constant current within 24 hours. The charger

shall then apply an automatic boost charger (equalize) to assure that the batteries are at full capacity. The charger shall contain visual display parameters and one LED indicator to allow visual monitoring of the charger status.

2.10 BATTERIES

The batteries will provide sufficient power to maintain the output voltage of the inverter for a period of 1 and « hours, maintaining 87.5% of nominal battery voltage. The batteries shall be enclosed in a cabinet that permits easy maintenance without requiring removal from it and shall be of the type listed below:

Sealed Lead-Calcium VRLA: The case and cover are constructed of polypropylene, contain low-pressure safety valve release vents, and are non-gassing in normal use. 10 year life expectancy.

2.11 ILS SYSTEM OPTIONS

The following optional equipment shall be provided with the system:

Output Circuit Breakers with alarms (OCBs): Maximum of 10 positions are available. 120 and 277 VAC breakers utilize one position each while 208 and 240 VAC breakers utilize two.

Seven (7) of OCBs rated as shown on schedule, 120 volts AC

Facsimile-Modem Communications Panel: Transmits an ILS system operating status reports over a dedicated phone line to up to six fax locations. Each designated fax location automatically receives a unit status report transmission following all monthly and annual test cycles or when an alarm condition is detected by the ULS system's self-diagnostic electronics. Status reports include readings on key operating parameters as well as complete alarm and inverter log printouts in uncoded, user friendly descriptions. The Facsimile-Modem's built-in liquid crystal display and keyboard located inside the ILS system cabinet allows user initiated on-site reviewing of operational status.

2.12 ILS SYSTEM ACCESSORIES

The following accessories shall be provided with the system:

Maintenance Bypass Switch: For increased safety; permits the transfer of protected equipment to direct AC utility power when maintenance is to be performed on the ILS System.

Break-Before-Make (BBM)
Make-Before-Break (MBB)

Check UPS-Software: Allows user to monitor and control the ILS System from a remote computer. Can also monitor power quality at the site.

Environmental Monitoring: Connects to the RS232 communications port. Adds the ability to talk to remote computers with its built-in modem. Even lets the user control and monitor the operation of the ILS System via modem. In an alarm situation, it will phone a list of numbers to alert the user in a clear, synthesized voice.

2.13 MECHANICAL

The system shall be contained in a code gauge, NEMA 1 steel cabinet finished in a scratch resistant, off-white baked enamel finish with a key lock, conduit knockouts at the tip, and front-opening removable doors. The system shall include an air filtering system and a plenum to expel heated air from inside the unit. The system's reliability shall have a minimum rating of 160,000 hours MTBF. All components shall have a modular design and a quick disconnect means to facilitate field service.

PART 3 EXECUTION

3.1 WIRING

All wiring shall be installed in conduit and shall be sized as required for voltage drop purposes to assure proper operation of connected loads.

3.2 SYSTEM OPERATION

The system shall allow connection of both "normally on" or "normally off" loads. Connected loads shall be carried via the transfer circuit by the utility during normal operation or by the system inverter during utility failures without interruption.

3.3 CONNECTED LOADS

The ILS system shall be designed to maintain the normal operation and performance integrity of all connected loads including voltage and frequency sensitive equipment by providing true "no break", continually conditioned sinusoidal output. Refer to plans for type and location of loads server by the system.

3.4 FACTORY STARTUP

Provides a factory service representative to perform the initial startup of the ILS System. Refer to Section 2.13 for additional information.

3.5 INSTALLATION

The ILS System shall be installed in accordance with all appropriate manufacturer's installation instructions and in compliance with all appropriate codes.

3.6 MAINTENANCE AND SERVICE

Maintenance and service programs will be made available by the supplier to assure long term viability of the Integrated Life Safety (ILS) System.

-- End of Section --

SECTION TABLE OF CONTENTS

DIVISION 16 - ELECTRICAL

SECTION 16710

PREMISES DISTRIBUTION SYSTEM

04/97

PART 1 GENERAL

1.1 REFERENCES
1.2 SYSTEM DESCRIPTION
1.3 ENVIRONMENTAL REQUIREMENTS
1.4 QUALIFICATIONS
1.4.1 Minimum Contractor Qualifications
1.4.2 Manufacturer
1.5 SUBMITTALS
1.6 DELIVERY AND STORAGE
1.7 OPERATION AND MAINTENANCE MANUALS
1.8 RECORD KEEPING AND DOCUMENTATION
1.8.1 Cables
1.8.2 Termination Hardware

PART 2 PRODUCTS

2.1 MATERIALS AND EQUIPMENT
2.2 UNSHIELDED TWISTED PAIR CABLE SYSTEM (Telephone)
2.2.1 Cable Insulation
2.2.2 Riser Cable
2.2.3 Horizontal Cable
2.2.4 Connecting Hardware
2.2.4.1 Telecommunications Outlets
2.2.4.2 Patch Panels
2.2.4.3 Patch Cords
2.2.4.4 Terminal Blocks
2.3 SHIELDED TWISTED PAIR CABLE SYSTEM (Data)
2.3.1 Backbone Cable
2.3.2 Horizontal Cable
2.3.3 Connecting Hardware
2.3.3.1 Connectors
2.3.3.2 Patch Panels
2.3.3.3 Patch Cords
2.4 COAXIAL CABLE SYSTEM
2.4.1 Riser and Backbone Cable
2.4.2 Horizontal Distribution Cable
2.4.3 Connecting Hardware
2.4.3.1 Connectors
2.4.3.2 Patch Panels
2.5 FIBER OPTIC CABLE SYSTEM
2.5.1 Riser and Backbone Cable
2.5.1.1 Multimode
2.5.2 To protect fiberoptic cable not run inside interior walls an OptiDuct #599-040-1 system as manufactured by Amp or approved equal shall be installed as shown on plans.

2.5.3 Connecting Hardware
2.5.3.1 Connectors
2.5.3.2 Patch Panels
2.5.3.3 Patch Cords
2.6 Base Unit Cabinets
2.6.1 Not Used
2.6.2 Not Used
2.6.3 Not Used
2.6.4 Not Used
2.6.5 Wall Mounted Cabinets
2.7 EQUIPMENT MOUNTING BACKBOARD
2.8 TELECOMMUNICATIONS OUTLET BOXES

PART 3 EXECUTION

3.1 INSTALLATION
3.1.1 Horizontal Distribution Cable
3.1.2 Riser and Backbone Cable
3.1.3 Telecommunications Outlets
3.1.3.1 Faceplates
3.1.3.2 Cables
3.1.3.3 Pull Cords
3.1.4 Terminal Blocks
3.1.5 Unshielded Twisted Pair Patch Panels
3.1.6 Fiber Optic Patch Panels (6-Packs)
3.1.7 Not Used
3.1.8 Not Used
3.2 TERMINATION
3.2.1 Unshielded Twisted Pair Cable
3.2.2 Shielded Twisted Pair Cable
3.2.3 Coaxial Cable
3.2.4 Fiber Optic Cable
3.3 GROUNDING
3.4 ADDITIONAL MATERIALS
3.5 ADMINISTRATION AND LABELING
3.5.1 Labeling
3.5.1.1 Labels
3.5.1.2 Cable
3.5.1.3 Termination Hardware
3.6 TESTING
3.6.1 Unshielded Twisted Pair Tests
3.6.2 Category 5 Circuits
3.6.3 Shielded Twisted Pair
3.6.4 Coaxial Cable
3.6.5 Fiber Optic Cable

-- End of Section Table of Contents --

SECTION 16710

PREMISES DISTRIBUTION SYSTEM
04/97

PART 1 GENERAL

1.1 REFERENCES

The publications listed below form a part of this specification to the extent referenced. The publications are referred to in the text by basic designation only.

ELECTRONIC INDUSTRIES ASSOCIATION (EIA)

EIA ANSI/TIA/EIA-568-A	(1995) Commercial Building Telecommunications Cabling Standard
EIA ANSI/TIA/EIA-569	(1996) Commercial Building Standard for Telecommunications Pathways and Spaces
EIA ANSI/TIA/EIA-606	(1993) Administration Standard for the Telecommunications Infrastructure of Commercial Buildings
EIA ANSI/TIA/EIA-607	(1994) Commercial Building Grounding and Bonding Requirements for Telecommunications
EIA TSB 67	(1995) Transmission Performance Specifications for Field Testing of Unshielded Twisted Pair Cabling Systems

IBM PUBLICATION CORPORATION (IBM)

IBM GA27-3361-07	(1987) LAN Cabling System - Planning and Installation
IBM GA27-3773-0	(1987) Cabling System Technical Interface Specifications

INSULATED CABLE ENGINEERS ASSOCIATION (ICEA)

ICEA S-80-576	(1994) Communications Wire and Cable for Wiring of Premises
ICEA S-83-596	(1994) Fiber Optic Premises Distribution Cable

NATIONAL FIRE PROTECTION ASSOCIATION (NFPA)

NFPA 70	(1996; Errata) National Electrical Code

UNDERWRITERS LABORATORY (UL)

UL 50	(1995; Rev thru Oct 1997) Enclosures for Electrical Equipment

1.2 SYSTEM DESCRIPTION

The premises distribution system shall consist of inside-plant horizontal, riser, and backbone cables and connecting hardware to transport telephone and data (including LAN) signals between equipment items in a building.

1.3 ENVIRONMENTAL REQUIREMENTS

Connecting hardware shall be rated for operation under ambient conditions of 32 to 140 degrees F and in the range of 0 to 95 percent relative humidity, noncondensing.

1.4 QUALIFICATIONS

1.4.1 Minimum Contractor Qualifications

All work under this section shall be performed by and all equipment shall be furnished and installed by a certified Telecommunications Contractor, hereafter referred to as the Contractor. With the exception of furnishing and installing conduit, electrical boxes, and pullwires, this work shall not be done by the Electrical Contractor. The Contractor shall have the following qualifications in Telecommunications Systems installation:

a. Contractor shall have a minimum of 3 years experience in the application, installation and testing of the specified systems and equipment.

b. All supervisors and installers assigned to the installation of this system or any of its components shall have factory certification from each equipment manufacturer that they are qualified to install and test the provided products. General electrical trade staff (electricians) shall not be used for the installation of the premises distribution system cables and associated hardware.

c. All installers assigned to the installation of this system or any of its components shall have a minimum of 3 years experience in the installation of the specified copper and fiber optic cable and components.

1.4.2 Manufacturer

The equipment and hardware provided under this contract shall be manufactured by Leviton and model numbers shall be identified to models used in existing Phase II building..

1.5 SUBMITTALS

Government approval is required for submittals with a "GA" designation; submittals having an "FIO" designation are for information only. The following shall be submitted in accordance with Section 01330 SUBMITTAL PROCEDURES:

SD-01 Data

Spare Parts; FIO.

Lists of spare parts, tools, and test equipment for each different item of

material and equipment specified, after approval of detail drawings, not later than 2 months prior to the date of beneficial occupancy. The data shall include a complete list of parts and supplies, with current unit prices and source of supply, and a list of spare parts recommended for stocking.

SD-04 Drawings

Premises Distribution System; GA1.

Detail drawings including a complete list of equipment and material. Detail drawings shall contain complete wiring and schematic diagrams and other details required to demonstrate that the system has been coordinated and will function properly as a system. Drawings shall include vertical riser diagrams, equipment rack details, elevation drawings of telecommunications closet walls, outlet face plate details for all outlet configurations, sizes and types of all cables, conduits, and cable trays. Drawings shall show proposed layout and anchorage of equipment and appurtenances, and equipment relationship to other parts of the work including clearance for maintenance and operation.

Record Drawings; GA.

Record drawings for the installed wiring system infrastructure per EIA ANSI/TIA/EIA-606. The drawings shall show the location of all cable terminations and location and routing of all backbone and horizontal cables. The identifier for each termination and cable shall appear on the drawings.

SD-06 Instructions

Manufacturer's Recommendations; GA.

Where installation procedures, or any part thereof, are required to be in accordance with the recommendations of the manufacturer of the material being installed, printed copies of these recommendations, prior to installation shall be provided. Installation of the item will not be allowed to proceed until the recommendations are received and approved.

SD-08 Statements

Test Plan; GA.

Test plan defining the tests required to ensure that the system meets technical, operational and performance specifications, 60 days prior to the proposed test date. The test plan must be approved before the start of any testing. The test plan shall identify the capabilities and functions to be tested, and include detailed instructions for the setup and execution of each test and procedures for evaluation and documentation of the results.

Qualifications; GA.

The qualifications of the Manufacturer, Contractor, and the Installer to perform the work specified herein. This shall include proof of the minimum qualifications specified herein.

SD-09 Reports

Test Reports; FIO.

Test reports in booklet form with witness signatures verifying execution of tests. Test results will also be provided on 3-1/2 inch diskettes in M.S. Word format. Reports shall show the field tests performed to verify compliance with the specified performance criteria. Test reports shall include record of the physical parameters verified during testing. Test reports shall be submitted within 14 days after completion of testing.

SD-13 Certificates

Premises Distribution System; FIO.

Written certification that the premises distribution system complies with the EIA ANSI/TIA/EIA-568-A, EIA ANSI/TIA/EIA-569, and EIA ANSI/TIA/EIA-606 standards.

Materials and Equipment; FIO.

Where materials or equipment are specified to conform, be constructed or tested to meet specific requirements, certification that the items provided conform to such requirements. Certification by a nationally recognized testing laboratory that a representative sample has been tested to meet the requirements, or a published catalog specification statement to the effect that the item meets the referenced standard, will be acceptable as evidence that the item conforms. Compliance with these requirements does not relieve the Contractor from compliance with other requirements of the specifications.

Installers; GA1.

The Contractor shall submit certification that all the installers are factory certified to install and test the provided products.

SD-18 Records

Record Keeping and Documentation; GA.

Documentation on cables and termination hardware in accordance with EIA ANSI/TIA/EIA-606.

1.6 DELIVERY AND STORAGE

Equipment delivered and placed in storage shall be stored with protection from the weather, humidity and temperature variation, dirt and dust or other contaminants.

1.7 OPERATION AND MAINTENANCE MANUALS

Commercial off the shelf manuals shall be furnished for operation, installation, configuration, and maintenance for all products provided as a part of the premises distribution system. Specification sheets for all cable, connectors, and other equipment shall be provided.

1.8 RECORD KEEPING AND DOCUMENTATION

1.8.1 Cables

A record of all installed cable shall be provided in hard copy formatand on electronic media using Windows based computer cable management software per

EIA ANSI/TIA/EIA-606. .

1.8.2 Termination Hardware

A record of all installed patch panels and outlets shall be provided in hard copy format and on electronic media using Windows based computer cable management software per EIA ANSI/TIA/EIA-606.

PART 2 PRODUCTS

2.1 MATERIALS AND EQUIPMENT

Materials and equipment shall be the standard products of a manufacturer regularly engaged in the manufacture of the products and shall be the manufacturer's latest standard design that has been in satisfactory use for at least 1 year prior to installation. Materials and equipment shall conform to the respective publications and other requirements specified below and to the applicable requirements of NFPA 70.

2.2 UNSHIELDED TWISTED PAIR CABLE SYSTEM (Telephone)

2.2.1 Cable Insulation

For each individual Category 5 cable, the insulation, material used on each pair shall be exactly the same in all physical, electrical, and chemical respects. The use of Teflon insulated, plenum rated Category 5 cable is acceptable for both plenum and non-plenum applications. If Teflon insulated plenum rated cable is used by the Contractor, it shall be Type 4x0, where all four pairs are Teflon insulated. Type 3x1 and 2x2 are not acceptable.

2.2.2 Riser Cable

Riser cable shall meet the requirements of ICEA S-80-576 and EIA ANSI/TIA/EIA-568-A for Category 3 100-ohm unshielded twisted pair cable. Cable shall be label-verified. Cable jacket shall be factory marked at regular intervals indicating verifying organization and performance level. Conductors shall be solid untinned copper 24 AWG. Cable shall be rated CMP per NFPA 70.

2.2.3 Horizontal Cable

Horizontal cable shall meet the requirements of EIA ANSI/TIA/EIA-568-A for Category 5 horizontal cable. Cable shall be label-verified. Cable jacket shall be factory marked at regular intervals indicating verifying organization and performance level. Conductors shall be solid untinned copper 24 AWG. Cable shall be rated CMP per NFPA 70.

2.2.4 Connecting Hardware

Connecting and cross-connecting hardware shall be the same category as the cable it serves. Hardware shall be in accordance with and EIA ANSI/TIA/EIA-568-A.

2.2.4.1 Telecommunications Outlets

Wall and desk outlet plates shall come equipped with two modular jacks, with the top or left jack labeled "voice" and the bottom or right jack labeled "data". Modular jacks shall be the same category as the cable they

terminate and shall meet the requirements of EIA ANSI/TIA/EIA-568-A. Modular jack pin/pair configuration shall be T568B per EIA ANSI/TIA/EIA-568-A as required by government. Modular jacks shall be keyed or unkeyed as required by government. Faceplates shall be provided and shall be impact resistant plastic, color as specified by architect. Mounting plates shall be provided for system furniture and shall match the system furniture in color. Outlet assemblies used in the premises distribution system shall consist of modular jacks assembled into both simplex and duplex outlet assemblies in single or double gang covers as indicated on the drawings. The modular jacks shall conform to the requirements of EIA ANSI/TIA/EIA-568-A, Category 5.

2.2.4.2 Patch Panels

Patch panels shall consist of eight-position modular jacks, with rear mounted type 110 insulation displacement connectors, arranged in rows or columns on wall mounted] panels. Jack pin/pair configuration shall be T568B per EIA ANSI/TIA/EIA-568-A as required by Government. Jacks shall be keyed or unkeyed as as indicated by Government. Panels shall be labeled with alphanumeric x-y coordinates and be provided with labeling space.

2.2.4.3 Patch Cords

Patch cords shall be cable assemblies consisting of flexible, twisted pair stranded wire with eight-position plugs at each end. Cable shall be label-verified. Cable jacket shall be factory marked at regular intervals indicating verifying organization and performance level. Patch cords shall be wired straight through; pin numbers shall be identical at each end and shall be paired to match T568B patch panel jack wiring per EIA ANSI/TIA/EIA-568-A. Patch cords shall be keyed or unkeyed as as indicated by Government. Patch cords shall be factory assembled.

2.2.4.4 Terminal Blocks

Terminal blocks shall be wall mounted wire termination units consisting of insulation displacement connectors mounted in plastic blocks, frames or housings. Blocks shall be type 110 which meet the requirements of EIA ANSI/TIA/EIA-568-A for category 5. Blocks shall be mounted on standoffs and shall include cable management hardware. Insulation displacement connectors shall terminate 22 or 24 gauge solid copper wire as a minimum, and shall be connected in pairs so that horizontal cable and connected jumper wires are on separate connected terminals.

2.3 SHIELDED TWISTED PAIR CABLE SYSTEM (Data)

2.3.1 Backbone Cable

Backbone cable shall meet the requirements of IBM GA27-3773-0 for 150 ohm Shielded Twisted Pair Cable and shall meet or exceed IBM performance requirements for Type 1A cable. Cable shall be label-verified. Cable jacket shall be factory marked at regular intervals indicating verifying organization and performance level. Cable shall be rated CMP per NFPA 70.

2.3.2 Horizontal Cable

Horizontal cable shall meet the requirements of IBM GA27-3773-0 for 150 ohm Shielded Twisted Pair Cable and shall meet or exceed IBM performance requirements for Type 1A cable. Cable shall be label-verified. Cable jacket shall be factory marked at regular intervals indicating verifying

organization and performance level. Cable shall be rated CMP per NFPA 70.

2.3.3 Connecting Hardware

2.3.3.1 Connectors

Connectors for shielded twisted pair cable shall meet the requirements of EIA ANSI/TIA/EIA-568-A for media interface connectors and IBM GA27-3773-0 for Type 1A data connectors. Connectors shall be of hermaphroditic design and shall be utilized for outlets and patch panel terminations. Outlet faceplates shall be provided and shall be impact resistant plastic, color as selected by Architect, single gang. Mounting plates shall be provided for systems furniture and shall match the systems furniture in color.

2.3.3.2 Patch Panels

Patch panels shall be wall mounted panels with openings for shielded twisted pair connectors. Panels shall be metallic and shall ground the outer shield of the cable. Patch panels shall provide strain relief for cables. Panels shall [be labeled with alphanumeric x-y coordinates] [be provided with labeling space].

2.3.3.3 Patch Cords

Patch cords shall be cable assemblies consisting of flexible shielded twisted pair cable with shielded twisted pair type connectors at each end. Cable shall meet the requirements of IBM GA27-3773-0 for 150 ohm Shielded Twisted Pair Cable and shall meet or exceed performance requirements for Type 6A patch panel data cable. Connectors shall meet or exceed the requirements of EIA ANSI/TIA/EIA-568-A for media interface connectors. Patch cords shall be factory assembled.

2.4 COAXIAL CABLE SYSTEM

2.4.1 Riser and Backbone Cable

Riser and backbone cable shall meet the requirements of EIA ANSI/TIA/EIA-568-A 10BASE5 for coaxial cable. The coax cable shall have a nominal impedance of 75 ohms, rated RG 59/U with a PVC Type IIA non-contaminating jacket. Cable shall be suitable for direct burial. Cable shall meet military specification MIL-C-17D. Cable shall be label-verified. Cable jacket shall be factory marked at regular intervals indicating verifying organization and performance level. Cable shall be rated CMR per NFPA 70. Cable shall have band markings every 8 feetfor transceiver tap placement.

2.4.2 Horizontal Distribution Cable

Horizontal distribution cable shall meet the requirements of EIA ANSI/TIA/EIA-568-A10BASE2 for coaxial cable. The coax cable shall have a nominal impedance of 75 ohms, rated RG 59/U with a PVC Type IIA non-contaminating jacket. Cable shall meet military specification MIL-C-17D. Cable shall be label-verified. Cable jacket shall be factory marked at regular intervals indicating verifying organization and performance level. Cable shall be rated CMG per NFPA 70.

2.4.3 Connecting Hardware

2.4.3.1 Connectors

Connectors shall meet the requirements of EIA ANSI/TIA/EIA-568-A 10BASE5 or 10BASE2 for coaxial cable connectors, as required for the service. Connectors for riser/backbone cable shall be an "F" Series RF terminator. Connectors for station cable shall be "F" Series RF terminator. Station cable faceplates shall be provided and shall be impact resistant plastic, , color as specified by architect,,single gang, with double-sided female "F" Series adapter. Mounting plates shall be provided for system furniture and shall match the furniture system in color.

2.4.3.2 Patch Panels

Patch panels shall be wall mounted panels. Connectors shall be double-sided "F" Series. Connector mounting surface shall ground the connector shields. Connectors shall meet the requirements of EIA ANSI/TIA/EIA-568-A 10BASE2 for coaxial cable connectors. Panels shall be labeled with alphanumeric x-y coordinates and be provided with labeling space.

2.5 FIBER OPTIC CABLE SYSTEM

2.5.1 The equipment and hardware shall be manufactured by Siecor and Leviton and shall be identical in Model number to models used in existing Phase II building.

2.5.1 Riser and Backbone Cable

2.5.1.1 Multimode

Multimode fiber optic riser and backbone cable shall meet the requirements of EIA ANSI/TIA/EIA-568-A and ICEA S-83-596 for 62.5/125 micrometer multimode graded index optical fiber cable. Number of strands shall be as indicated on the drawings. Numerical aperture for each fiber shall be a minimum of 0.275. Cable construction shall be tight buffered type. Individual fibers shall be color coded for identification. Cable shall be imprinted with fiber count and aggregate length at regular intervals. Cable shall be rated OFNR, OFNP, OFNG per NFPA 70.

2.5.2 To protect fiberoptic cable not run inside interior walls an OptiDuct #599-040-1 system as manufactured by Amp or approved equal shall be installed as shown on plans.

2.5.3 Connecting Hardware

2.5.3.1 Connectors

Connectors shall be SC type with ceramic ferrule material with a maximum insertion loss of .5 dB. Connectors shall meet performance requirements of EIA ANSI/TIA/EIA-568-A. Connectors shall be field installable. Connectors shall utilize adhesive for fiber attachment to ferrule. Connectors shall terminate fiber sizes as required for the service. .

2.5.3.2 Patch Panels

Patch panels shall be a complete system of components by a single manufacturer, and shall provide termination, splice storage, routing, radius limiting, cable fastening, storage, and cross-connection. Patch panels shall be wall mounted panels. Patch panels shall provide strain relief for cables. Panels shall be labeled with alphanumeric x-y

coordinates and be provided with labeling space. Patch panel connectors and couplers shall be the same type and configuration as used elsewhere in the system.

2.5.3.3 Patch Cords

Patch cords shall be cable assemblies consisting of flexible optical fiber cable with connectors of the same type as used elsewhere in the system. Optical fiber shall be the same type as used elsewhere in the system. Patch cords shall be complete assemblies from manufacturer's standard product lines.

2.6 Base Unit Cabinets

2.6.1 Not Used

2.6.2 Not Used

2.6.3 Not Used

2.6.4 Not Used

2.6.5 Wall Mounted Cabinets

Wall mounted Base Unit Cabinets shall conform to UL 50 and have boxes constructed of zinc-coated sheet steel with dimensions not less than shown on drawings. Trim shall be fitted with hinged door and flush catch. Doors shall provide maximum openings to the box interiors. Fiber obtic termination cabinets shall utilize 6-pack termination panels. Number of 6-pack terminaltion panels shall be as indicated on the drawings. Boxes shall be provided with 3/4 inch plywood backboard painted white or a light color. A duplex AC outlet shall be installed within the cabinet.

2.7 EQUIPMENT MOUNTING BACKBOARD

Plywood backboards shall be provided, 3/4 inch sized as required, painted with white or light colored paint.

2.8 TELECOMMUNICATIONS OUTLET BOXES

Electrical boxes for telecommunication outlets shall be 4-11/16 inch square by 2-1/8 inches deep with minimum 3/8 inch deep single or two gang plaster ring as shown. Provide a minimum 1 inch conduit.

PART 3 EXECUTION

3.1 INSTALLATION

System components and appurtenances shall be installed in accordance with NFPA 70, manufacturer's instructions and as shown. Necessary interconnections, services, and adjustments required for a complete and operable signal distribution system shall be provided. Components shall be labeled in accordance with EIA ANSI/TIA/EIA-606. Penetrations in fire-rated construction shall be firestopped in accordance with Section 07840 FIRESTOPPING. Conduits, outlets and raceways shall be installed in accordance with Section 16415 ELECTRICAL WORK, INTERIOR. Wiring shall be installed in accordance with EIA ANSI/TIA/EIA-568-A and as specified in Section 16415 ELECTRICAL WORK, INTERIOR. Wiring, and terminal blocks and outlets shall be marked in accordance with EIA ANSI/TIA/EIA-606. Cables

shall not be installed in the same cable tray, utility pole compartment, or floor trench compartment with ac power cables. Cables not installed in conduit or wireways shall be properly secured and neat in appearance and, if installed in plenums or other spaces used for environmental air, shall comply with NFPA 70 requirements for this type of installation.

3.1.1 Horizontal Distribution Cable

The rated cable pulling tension shall not be exceeded. Cable shall not be stressed such that twisting, stretching or kinking occurs. Cable shall not be spliced. Fiber optic cables shall be installed either in conduit or through type cable trays to prevent microbending losses. Copper cable not in a wireway shall be suspended a minimum of 8 inches above ceilings by cable supports no greater than 60 inches apart. Cable shall not be run through structural members or in contact with pipes, ducts, or other potentially damaging items. Placement of cable parallel to power conductors shall be avoided, if possible; a minimum separation of 12 inches shall be maintained when such placement cannot be avoided. Cables shall be terminated; no cable shall contain unterminated elements. Minimum bending radius shall not be exceeded during installation or once installed. Cable ties shall not be excessively tightened such that the transmission characteristics of the cable are altered. In raised floor areas, cable shall be installed after the flooring system has been installed. Cable 6 feet long shall be neatly coiled not less than 12 inches in diameter below each feed point in raised floor areas.

3.1.2 Riser and Backbone Cable

Vertical cable support intervals shall be in accordance with manufacturer's recommendations. Cable bend radius shall not be less than ten times the outside diameter of the cable during installation and once installed. Maximum tensile strength rating of the cable shall not be exceeded. Cable shall not be spliced.

3.1.3 Telecommunications Outlets

3.1.3.1 Faceplates

As a minimum each jack shall be labeled as to its function and a unique number to identify cable link.

3.1.3.2 Cables

Unshielded twisted pair and fiber optic cables shall have a minimum of 6 inches of slack cable loosely coiled into the telecommunications outlet boxes. Minimum manufacturers bend radius for each type of cable shall not be exceeded.

3.1.3.3 Pull Cords

Pull cords shall be installed in all conduit serving telecommunications outlets which do not initially have fiber optic cable installed.

3.1.4 Terminal Blocks

Terminal blocks shall be mounted in orderly rows and columns. Adequate vertical and horizontal wire routing areas shall be provided between groups of blocks. Industry standard wire routing guides shall be utilized.

3.1.5 Unshielded Twisted Pair Patch Panels

Patch panels shall be mounted in equipment racks with sufficient modular jacks to accommodate the installed cable plant plus 10 percent spares. Cable guides shall be provided above, below and between each panel.

3.1.6 Fiber Optic Patch Panels (6-Packs)

Fiber Optic 6-pack patch panels shall be mounted in equipment racks with sufficient ports to accommodate the installed cable plant, as indicated on the drawings plus 10 percent spares. A slack loop of fiber shall be provided within each panel. Loop shall be provided as recommended by the manufacturer. The outer jacket of each cable entering a patch panel shall be secured to the panel to prevent movement of the fibers within the panel, using clamps or brackets specifically manufactured for that purpose.

3.1.7 Not Used

3.1.8 Not Used

3.2 TERMINATION

Cables and conductors shall sweep into termination areas; cables and conductors shall not bend at right angles. Manufacturer's minimum bending radius shall not be exceeded. When there are multiple system type drops to individual workstations, relative position for each system shall be maintained on each system termination block or patch panel.

3.2.1 Unshielded Twisted Pair Cable

Each pair shall be terminated on appropriate outlets, terminal blocks or patch panels. No cable shall be unterminated or contain unterminated elements. Pairs shall remain twisted together to within the proper distance from the termination as specified in EIA ANSI/TIA/EIA-568-A. Conductors shall not be damaged when removing insulation. Wire insulation shall not be damaged when removing outer jacket.

3.2.2 Shielded Twisted Pair Cable

Each cable shall be terminated on panel-mounted connectors. Cables shall be grounded at patch panels using manufacturer's recommended methods. Shield braid shall be continuous to connector braid terminator. Wire insulation shall not be damaged when removing shield.

3.2.3 Coaxial Cable

Home run type station cables shall be terminated at each end. Backbone cables shall be terminated with appropriate connectors or end-of-line terminators as required. Loop-type cable systems shall be terminated with appropriate drop connectors and terminators as required. Backbone cable shield conductor shall be grounded to communications ground at only one point and shall not make electrical contact with ground anywhere else.

3.2.4 Fiber Optic Cable

Each fiber shall have connectors installed. The pull strength between the connector and the attached fiber shall be not less than 25 pounds. The mated pair loss, without rotational optimization, shall not exceed 1.0 dB. Fiber optic connectors shall be installed per EIA ANSI/TIA/EIA-568-A.

3.3 GROUNDING

Signal distribution system ground shall be installed in the telecommunications entrance facility and in each telecommunications closet in accordance with EIA ANSI/TIA/EIA-607 and Section 16415 ELECTRICAL WORK, INTERIOR. Equipment racks shall be connected to the electrical safety ground.

3.4 ADDITIONAL MATERIALS

The Contractor shall provide the following additional materials required for facility startup.

a. 10 of each type outlet.

b. 10 of each type cover plate.

c. 1 of each type terminal block for each telecommunications closet.

d. 4 Patch cords of 10 feet for each telecommunications closet.

e. 1 Set of any and all special tools required to establish a cross connect and to change and/or maintain a terminal block.

3.5 ADMINISTRATION AND LABELING

3.5.1 Labeling

3.5.1.1 Labels

All labels shall be in accordance with EIA ANSI/TIA/EIA-606.

3.5.1.2 Cable

All cables will be labeled using color labels on both ends with encoded identifiers per EIA ANSI/TIA/EIA-606.

3.5.1.3 Termination Hardware

All workstation outlets and patch panel connections will be labeled using color coded labels with encoded identifiers per EIA ANSI/TIA/EIA-606.

3.6 TESTING

Materials and documentation to be furnished under this specification are subject to inspections and tests. All components shall be terminated prior to testing. Equipment and systems will not be accepted until the required inspections and tests have been made, demonstrating that the signal distribution system conforms to the specified requirements, and that the required equipment, systems, and documentation have been provided.

3.6.1 Unshielded Twisted Pair Tests

All metallic cable pairs shall be tested for proper identification and continuity. All opens, shorts, crosses, grounds, and reversals shall be corrected. Correct color coding and termination of each pair shall be verified in the communications closet and at the outlet. Horizontal wiring shall be tested from and including the termination device in the

communications closet to and including the modular jack in each room. Backbone wiring shall be tested end-to-end, including termination devices, from terminal block to terminal block, in the respective communications closets. These test shall be completed and all errors corrected before any other tests are started.

3.6.2 Category 5 Circuits

All category 5 circuits shall be tested using a test set that meets the Class II accuracy requirements of EIA TSB 67 standard. Testing shall use the Basic Link Test procedure of EIA TSB 67. If more than 5 percent of the category 3 circuits tested fail, then all category 3 circuits shall be tested. Cables which contain failed circuits shall be replaced and retested to verify the standard is met.

3.6.3 Shielded Twisted Pair

Wiring configuration shall be tested for continuity, opens, shorts, swaps and correct pin configuration; dc resistance both pair-to-pair and wire-to-shield shall be verified. Cable lengths shall be verified. Near end crosstalk shall be tested from 772 kHz to 300 MHz. Ground potential difference between wiring closets, ground potential difference between patch panel and wall outlet, and ground path resistance shall be tested per IBM GA27-3361-07.

3.6.4 Coaxial Cable

Cable shall be tested for continuity, shorts and opens. Characteristic impedance shall be verified over the range of intended operation. Cable length shall be verified. Cable shall be sweep tested for attenuation over the range of intended operation.

3.6.5 Fiber Optic Cable

Unless stated otherwise, tests shall be performed from both ends of each circuit. Connectors shall be visually inspected for scratches, pits or chips and shall be reterminated if any of these conditions exist. Each circuit leg and complete circuit shall be tested for insertion loss at 1310 and 1550 nm using a light source similar to that used for the intended communications equipment. High-resolution optical time domain reflectometer (OTDR) tests shall be performed from one end of each fiber. Scale of the OTDR trace shall be such that the entire circuit appears over a minimum of 80 percent of the X-axis.

-- End of Section --

SECTION TABLE OF CONTENTS

DIVISION 16 - ELECTRICAL

SECTION 16711

TELEPHONE SYSTEM, OUTSIDE PLANT

05/98

PART 1 GENERAL

1.1 REFERENCES
1.2 SYSTEM DESCRIPTION
1.3 QUALIFICATIONS
1.3.1 Cable Installers
1.3.2 Cable Splicing and Termination
1.3.3 Manufacturers
1.4 SUBMITTALS
1.5 DELIVERY AND STORAGE
1.5.1 Cable Requirements-
1.5.2 Equipment

PART 2 PRODUCTS

2.1 STANDARD PRODUCTS
2.2 CABLE
2.2.1 Copper Conductor Cable
2.2.1.1 Not Used
2.2.1.2 Not Used
2.2.1.3 Underground
2.2.1.4 Screened
2.2.2 Fiber Optic Cable
2.2.2.1 Cable Cores
2.2.2.2 Optical Fiber
2.2.2.3 Shielding or Other Metallic Covering
2.2.2.4 Performance Requirements
2.3 CLOSURES
2.3.1 Copper Conductor Closures
2.3.1.1 Not Used
2.3.1.2 Not Used
2.3.1.3 Underground Closure
2.3.2 Fiber Optic Closures
2.3.2.1 Not Used
2.3.2.2 Not Used
2.3.2.3 Fiber Optic Underground
2.4 CABLE SPLICES AND ORGANIZERS
2.4.1 Copper Cable Splices
2.4.2 Fiber Optic Cable Splices
2.4.3 Fiber Optic Splice Organizer
2.5 CABLE TERMINALS
2.5.1 Pedestal-Type Cable Terminals
2.5.2 Cross-connect Cable Terminals
2.6 MANHOLE AND DUCT
2.6.1 New Manholes
2.6.2 Manhole Overbuilds

2.6.3 Duct/Conduit
2.6.4 Innerduct
2.7 EQUIPMENT RACKS
2.7.1 Not Used
2.7.2 Wall Mounted Open Frame
2.7.3 Cable Guides
2.7.4 Not Used
2.7.5 Not Used
2.7.6 Equipment Mounting Backboard
2.8 CONNECTOR BLOCKS
2.9 PROTECTOR MODULES
2.10 FIBER-OPTIC TERMINATIONS
2.10.1 Fiber Optic Connectors
2.10.2 Fiber Optic Patch Panels
2.11 MISCELLANEOUS ITEMS
2.11.1 Shield Connectors
2.11.2 Grounding Braid
2.11.3 Warning Tape
2.11.4 Cable Warning Signs

PART 3 EXECUTION

3.1 INSTALLATION
3.1.1 Cable Inspection and Repair
3.1.2 Buried Cable
3.1.2.1 Cable Depth
3.1.2.2 Above Ground Cable Protection
3.1.2.3 Telephone Cable Bends
3.1.2.4 Penetrations
3.1.2.5 Cable Protection
3.1.3 Underground Cable
3.1.3.1 Cable Pulling
3.1.3.2 Penetrations for Cable Access
3.1.3.3 Cable Bends
3.1.4 Not Used
3.1.5 Manhole and Ducts
3.1.5.1 Innerduct Installation
3.1.5.2 Pull Cord
3.1.6 Surge Protection
3.2 SPLICING
3.2.1 Copper Conductor Splices
3.2.2 Fiber Optic Splices
3.3 GROUNDING
3.3.1 Ground Bars
3.3.1.1 Telecommunications Master Ground Bar (TMGB)
3.3.1.2 Telecommunications Ground Bar (TGB)
3.3.2 Incoming Outside Plant Cables
3.3.3 Cable Stubs
3.3.4 Shields
3.3.5 Protection Assemblies
3.3.6 Manholes
3.4 CUTOVER AND RECORDS
3.5 ACCEPTANCE TESTS
3.5.1 Copper Conductor Cable
3.5.2 Fiber Optic Cable
3.5.2.1 OTDR Test
3.5.2.2 Attenuation Test
3.5.2.3 Bandwidth Test

-- End of Section Table of Contents --

SECTION 16711

TELEPHONE SYSTEM, OUTSIDE PLANT
05/98

PART 1 GENERAL

1.1 REFERENCES

The publications listed below form a part of this specification to the extent referenced. The publications are referred to in the text by basic designation only.

AMERICAN NATIONAL STANDARDS INSTITUTE (ANSI)

ANSI C62.61	(1993) Gas Tube Surge Arrestors on Wire Line Telephone Circuits

AMERICAN SOCIETY FOR TESTING AND MATERIALS (ASTM)

ASTM D 2239	(1996a) Polyethylene (PE) Plastic Pipe (SIDR-PR) Based on Controlled Inside Diameter

ELECTRONIC INDUSTRIES ASSOCIATION (EIA)

EIA ANSI/EIA-455-81A	(1992) FOTP-81 Compound Flow (Drip) Test for Filled Fiber Optic Cable
EIA ANSI/EIA/TIA-455-30B	(1991) FOTP-30 Frequency Domain Measurement of Multimode Optical Fiber
EIA ANSI/EIA/TIA-455-53A	(1990) FOTP-53 Attenuation by Substitution Measurement for Multimode Graded-Index Optical Fibers or Fiber Assemblies Used in Long Length Communications Systems
EIA ANSI/EIA/TIA-455-78A	(1990; R 1995) FOTP-78 Spectual Attenuation Cutback Measurement for Single Mode Optical Fibers
EIA ANSI/TIA/EIA-568A	(1995) Commercial Building Telecommunications Cabling Standard
EIA ANSI/TIA/EIA-607	(1994) Commercial Building Grounding and Bonding Requirements for Telecommunications

INSTITUTE OF ELECTRICAL AND ELECTRONICS ENGINEERS (IEEE)

IEEE C2	(1997) National Electrical Safety Code

NATIONAL FIRE PROTECTION ASSOCIATION (NFPA)

NFPA 70	(1996; Errata 96-4) National Electrical Code

RURAL UTILITIES SERVICE (RUS)

RUS Bulletin 1753F-401(PC-2)	(1995) RUS Standard for Splicing Copper and Fiber Optic Cables
RUS Bulletin 1755.910	RUS Specification for Outside Plant Housings and Serving Area Interface Systems
RUS REA Bulletin 345-72	(1985) REA Specification for Filled Splice Closures (PE-74)
RUS REA Bulletin 345-90	(1986) Totally Filled Fiber Optic Cable (PE-90)
RUS REA Bulletin 345-151	(1989) Specifications and Drawings for Conduit and Manhole Construction (Form 515c)
RUS REA Bulletin 1751F-641	(1995) Construction of Buried Plant
RUS REA Bulletin 1755I-100	(1991; Rev through Supple 11 Nov 92) List of Materials Acceptable for Use on Telephone System of REA Telephone Borrowers
RUS REA PC-4	(1976) Acceptance Tests and Measurements of Telephone Plant
RUS REA PE-33	(1985) Shield Bonding Connectors
RUS REA PE-39	(1993) REA Specification for Filled Telephone Cables
RUS REA PE-60	(1979) Trunk Carrier Systems
RUS REA PE-87	(1994) Terminating (TIP) Cable
RUS REA PE-89	(1993) Filled Telephone Cables with Expanded Insulation
RUS REA TE&CM 643-02	(1983) Underground Conduit and Manhole Design and Construction (Physical Plant)

UNDERWRITERS LABORATORIES (UL)

UL 497	(1995; Rev Mar 1996) Protectors for Paired Conductor Communication Circuits

1.2 SYSTEM DESCRIPTION

The outside plant system shall consist of all cable, conduit, manholes, poles, etc. required to provide signal paths from the closest point of presence to the new facility, including free standing frames or backboards, terminating cables, lightning and surge protection modules at the entry facility. The work consists of furnishing, installing, testing and making operational a complete outside plant system for continuous use.

1.3 QUALIFICATIONS

1.3.1 Cable Installers

Installation shall be under the direct supervision of an individual with a minimum of 3 years experience in the installation of the specified copper and fiber optic cable and components.

1.3.2 Cable Splicing and Termination

All cable splicers shall have training in the proper techniques and have a minimum of 3 years experience in splicing and terminating the specified cables. Modular splices shall be performed by factory certified personnel or under direct supervision of factory trained personnel for products used.

1.3.3 Manufacturers

The cable, equipment, and hardware provided shall be from manufacturers that have a minimum of 3 years experience in producing the types of cable, equipment, and hardware specified.

1.4 SUBMITTALS

Government approval is required for submittals with a "GA" designation; submittals having an "FIO" designation are for information only. The following shall be submitted in accordance with Section 01330 SUBMITTAL PROCEDURES:

SD-01 Data

Spare Parts and Equipment List; FIO.

A data list of recommended spare parts, tools, and test equipment for each different item of material and equipment specified prior to beneficial occupancy. The data shall include a complete list of parts and supplies, with current unit prices and source of supply.

SD-04 Drawings

Telephone System; GA1.

Detail drawings, consisting of a complete list of equipment and material, including manufacturer's descriptive and technical literature, performance charts and curves, and catalog cuts. Detail drawings shall also contain complete configuration information, wiring diagrams and any other details required to demonstrate that the cable system has been coordinated to support the transmission systems identified in the specifications and drawings. Drawings shall show proposed layout and anchorage of equipment and appurtenances, and equipment relationship to other parts of the work including clearance for maintenance and operations.

Record Drawings; GA.

Record drawings for the installed wiring system showing the actual location of all cable terminations, splices, routing, and size and type of all cables. The identifier for each termination and cable shall appear on the drawings. The drawings shall include gauge and pair or fiber count for each cable, duct and innerduct arrangement, or conductor assignment of outside plant, and protector and connector block layout at the termination points after installation.

SD-06 Instructions

Installation; GA.

Printed copies of the manufacturer's recommendations for the material being installed, prior to installation. Installation of the item will not be allowed to proceed where installation procedures, or any part thereof, are required to be in accordance with those recommendations until the recommendations are received and approved.

SD-08 Statements

Acceptance Tests; GA.

Test plans defining all tests required to ensure that the system meets specified requirements. The test plans shall define milestones for the tests, equipment, personnel, facilities, and supplies required. The test plans shall identify the capabilities and functions to be tested.

Cutover and Records; GA.

The cutover plan shall provide procedures and schedules for relocation of facility station numbers without interrupting service to any active location.

SD-09 Reports

Acceptance Tests; FIO.

Test reports in booklet form showing all field tests performed, upon completion and testing of the installed system. Measurements shall be tabulated on a pair by pair or strand by strand basis.

SD-13 Certificates

Telephone System; FIO.

Proof that the items furnished under this section conform to the specified requirements in FCC, ICEA, REA, RUS, ANSI, ASTM, NFPA, EIA, or UL, where materials and equipment are so specified.

Qualifications; GA.

The qualifications of the manufacturer, splicer, and installation supervisor as specified.

1.5 DELIVERY AND STORAGE

1.5.1 Cable Requirements-

All cable shall be shipped on reels. The diameter of the drum shall be large enough to prevent damage to the cable during reeling and unreeling. The reels shall be constructed to prevent damage during shipment and handling. The outer end of the cable shall be securely fastened to the reel head to prevent the cable from becoming loose in transit. The inner end of the cable shall project into a slot in the side of the reel, or into a housing on the inner slot of the drum, with sufficient length to make it available for testing. The inner end shall be fastened to prevent the cable from becoming loose during installation. End seals shall be applied to each of the cables to prevent moisture from entering the cable. The

reels with cable shall be suitable for outside storage conditions when the temperature ranges from minus 40 to plus 148 degrees F, with relative humidity from 0 to 100 percent.

1.5.2 Equipment

All equipment shall be stored with protection from the weather, humidity and temperature variations, dirt and dust, or other contaminants, in accordance with the manufacturer's requirements.

PART 2 PRODUCTS

2.1 STANDARD PRODUCTS

Materials and equipment shall be the standard products of a manufacturer regularly engaged in the manufacture of such products and shall be the manufacturer's latest standard design that has been in satisfactory use for at least 2 years prior to bid opening. Each major component of equipment shall have the manufacturer's name and type identified on the equipment. All products supplied shall be specifically designed and manufactured for use with outside plant communications systems. All items of the same class of equipment shall be the products of a single manufacturer.

2.2 CABLE

2.2.1 Copper Conductor Cable

Copper conductor cable shall conform to the following:

2.2.1.1 Not Used

2.2.1.2 Not Used

2.2.1.3 Underground

Cable shall be manufactured per RUS REA PE-39 or RUS REA PE-89. A 8 mil coated aluminum or 5 mil copper metallic shield shall be provided.

2.2.1.4 Screened

Screened cable shall comply with RUS REA PE-39 or RUS REA PE-89.

2.2.2 Fiber Optic Cable

Reeled fiber optic cable shall be specifically designed for outside use, be filled or loose buffer construction, and conform to RUS REA Bulletin 345-90.

2.2.2.1 Cable Cores

A central, nonmetallic core member shall be included to serve as a cable core foundation to reduce strain on the fibers, but not to serve as a pulling strength member.

2.2.2.2 Optical Fiber

Single-mode optical fibers shall have a 8.3 micron core, 125 micron cladding and 245 micron coating. Multi-mode optical fibers shall have 62.5 micron core, 125 micron cladding and 245 micron coating..

2.2.2.3 Shielding or Other Metallic Covering

A copper, copper alloy, or copper and steel laminate metallic covering or shield shall be provided per RUS REA Bulletin 345-90.

2.2.2.4 Performance Requirements

The fiber optic cable shall comply with the specified mechanical performance requirements while used in buried and underground duct applications where the temperature varies from minus 5 to plus 140 degrees F. Optical performance degradation shall be less than 5 percent of the optical performance requirements in the temperature range of minus 5 to plus 140 degrees F. The fiber optic cable shall not be damaged in storage where the temperature may vary from minus 40 to plus 148 degrees F.

2.3 CLOSURES

2.3.1 Copper Conductor Closures

2.3.1.1 Not Used

2.3.1.2 Not Used

2.3.1.3 Underground Closure

Underground closures shall conform to RUS REA Bulletin 345-72. The closure shall be of thermoplastic, thermoset, or stainless steel material and be suitable for use in a vault or manhole.

2.3.2 Fiber Optic Closures

2.3.2.1 Not Used

2.3.2.2 Not Used

2.3.2.3 Fiber Optic Underground

The underground closure shall be suitable to house a splice organizer in a protective housing. An encapsulating compound shall be poured into this enclosure. The closure shall be of thermo-plastic, thermoset-plastic, or stainless steel material and suitable for use in a vault or manhole. The encapsulating compound shall be re-enterable and shall not alter the chemical stability of the closure.

2.4 CABLE SPLICES AND ORGANIZERS

2.4.1 Copper Cable Splices

All cables greater than 25 pairs shall be spliced using modular splicing connectors, which accommodate 25 pairs of conductors at a time. The correct connector size shall be used to accommodate the wire gauge of the cable to be spliced. The connectors used shall be listed in RUS REA Bulletin 1755I-100.

2.4.2 Fiber Optic Cable Splices

Each fiber optic splice shall be physically protected by a splice kit. The kit shall be specially designed for the splice.

2.4.3 Fiber Optic Splice Organizer

The splice organizer shall be suitable for housing fiber optic splices in a neat and orderly fashion. The splice organizer shall allow for a minimum of 3 feet of fiber for each fiber within the cable to be neatly stored without kinks or twists. The splice organizer shall accommodate individual strain relief for each splice. The splice organizer shall allow for future maintenance or modification, without damage to the cable or splices. All required splice organizer hardware, such as splice trays, protective glass shelves, and shield bond connectors shall be provided in the organizer kit.

2.5 CABLE TERMINALS

2.5.1 Pedestal-Type Cable Terminals

Pedestal-type cable terminals shall conform to RUS Bulletin 1755.910.

2.5.2 Cross-connect Cable Terminals

Cross-connect cable terminals shall be weatherproofed for outdoor use and suitable for pole, pad, or stake mounting. The terminal shall be equipped with mounting columns and distribution rings for jumper-wire routing. The terminal shall be of aluminum or steel construction and ribbed for strength.

2.6 MANHOLE AND DUCT

All manhole and duct products shall conform to RUS REA TE&CM 643-02.

2.6.1 New Manholes

New manholes shall be equipped with pulling-in irons, cable racks, and ground rod, and conform to the requirements of RUS REA Bulletin 345-151. Manholes shall be a minimum of 12 feet long by 6 feet wide by 6.5 feet high. Manholes shall be designed so that the main trunk conduits enter and exit near the center of the ends, and lateral conduits exit on the sides near the corners. Manholes may be pre-cast or cast in place.

2.6.2 Manhole Overbuilds

Existing manholes which are enlarged as part of this project shall be equipped with new pulling-in irons, cable racks, and ground rod.

2.6.3 Duct/Conduit

Conduit shall be furnished as specified in Sections 16415 ELECTRICAL WORK, INTERIOR and 16375 ELECTRICAL DISTRIBUTION SYSTEM, UNDERGROUND and as shown on project drawings.

2.6.4 Innerduct

Innerduct shall be SIDR 11.5 polyethylene plastic pipe conforming to ASTM D 2239.

2.7 EQUIPMENT RACKS

Distribution frames, cabinets, and back-boards shall be provided as shown and designed to mount connector blocks, protector blocks, cross connects, and other hardware required to terminate and protect the outside telephone plant cable; to provide a demarcation point between inside and outside

plant cable; and to allow inside and outside plant cable to be cross connected.

2.7.1 Not Used

2.7.2 Wall Mounted Open Frame

Wall mounted open frame equipment racks shall be steel or aluminum relay racks to mount equipment 19 or 23 inches wide with standoff brackets for wall mounting. Uprights shall be drilled and tapped 12-24 in a 1/2 inch pattern. Standoff brackets shall be of sufficient length for a 6 inch clearance between rack and wall. Wall mounted open frame racks shall be hinged. AC outlets shall be provided.

2.7.3 Cable Guides

Cable guides shall be specifically manufactured for the purpose of routing cables, wires and patch cords horizontally and vertically on 19 or 23 inch equipment racks. Cable guides shall consist of ring or bracket-like devices mounted on rack panels for horizontal use or individually mounted for vertical use. Cable guides shall mount to racks by screws and/or nuts and lock-washers.

2.7.4 Not Used

2.7.5 Not Used

2.7.6 Equipment Mounting Backboard

Backboards shall be 3/4 inch AC plywood, sized as shown, painted with white or light colored paint.

2.8 CONNECTOR BLOCKS

Connector blocks consisting of flame-retardant molded plastic fastened to a metal mounting bar shall be provided to terminate the outside plant cable as shown. The connector blocks shall be of 100-pair block size and equipped with protection modules. The connector blocks shall be 24 gauge stub type. The cable stubs shall be 100 pair and conform to RUS REA PE-87.

2.9 PROTECTOR MODULES

The protector modules shall be of the two-element gas tube type. Protection modules shall be maximum duty, A>20 kA, B>1000, C>200A where A is the maximum single impulse discharge current, B is the impulse life and C is the AC discharge current per ANSI C62.61. The gas modules shall shunt high voltage to ground, fail short, be equipped with an external spark gap and heat coils, and shall comply with UL 497.

2.10 FIBER-OPTIC TERMINATIONS

2.10.1 Fiber Optic Connectors

All outside plant fiber strands shall be terminated in a SC type fiber optic connector, with ceramic ferrule material and a maximum insertion loss of 0.5 dB. Connectors shall meet performance standards of EIA ANSI/TIA/EIA-568A. If pre-connectorized cable assemblies or pigtails are used, the connectors shall be terminated on a 10 foot length of single-fiber cable. The single-fiber cable shall contain a buffered

optical fiber of the same type and specification as that used in the multi-fiber cable.

2.10.2 Fiber Optic Patch Panels

Patch panels shall be a complete system of components by a single manufacturer, and shall provide termination, splice storage, routing, radius limiting, cable fastening, storage, and cross-connection. Patch panels shall be wall mounted panels. Patch panels shall provide strain relief for cables. Panels shall be labeled with alphanumeric x-y coordinates and provided with labeling space. Patch panel connectors and couplers shall be the same type and configuration as used elsewhere in the system.

2.11 MISCELLANEOUS ITEMS

2.11.1 Shield Connectors

Shield connectors shall make a stable, low-impedance electrical connection between the shield of the communications cable and a conductor such as a strap, bar, or wire. The connector shall be made of tin-plated tempered brass. Shield bond connectors shall comply with RUS REA PE-33.

2.11.2 Grounding Braid

Grounding braid shall provide low electrical impedance connections for dependable shield bonding. The braid shall be made from flat tin-plated copper.

2.11.3 Warning Tape

Marking and locating tape shall be acid and alkali resistant polyethylene film, 6 inches wide with a minimum strength of 1750 psi lengthwise and 1500 psi crosswise. The tape shall be manufactured with integral wires, foil backing, or other means to enable detection by a metal detector when the tape is buried up to 3 feet deep. The metallic core shall be encased in a protective jacket or provided with other means to protect it from corrosion and shall be specifically manufactured for marking and locating underground utilities. The warning tape shall be orange in color and continuously imprinted with the words "WARNING - COMMUNICATIONS CABLE BELOW" at not more than 48 inch intervals.

2.11.4 Cable Warning Signs

Cable warning signs, which identify the route of buried cable, shall be stake mounted. The stake shall be driven into undisturbed soil and the sign shall be mounted to the stake in accordance with the manufacturer's instructions. Warning signs shall be placed at intervals of no more than 500 feet and at each change of direction in the cable route. Warning signs shall also be placed on each side of every crossing of surface obstacles such as roads, railroads, stream crossings, or any similar crossing where excavation is likely to occur.

PART 3 EXECUTION

3.1 INSTALLATION

All system components and appurtenances shall be installed in accordance with the manufacturer's instructions and as shown. All installation work

shall be done in accordance with the safety requirements set forth in the general requirements of IEEE C2 and NFPA 70.

3.1.1 Cable Inspection and Repair

All cable and wire used in the construction of the project shall be handled with care. Each reel shall be inspected for cuts, nicks or other damage. All damage shall be repaired to the satisfaction of the Contracting Officer. The reel wrap shall remain intact on the reel until the cable or wire is ready to be placed.

3.1.2 Buried Cable

Buried cable installation shall be accomplished in accordance with RUS REA Bulletin 1751F-641.

3.1.2.1 Cable Depth

Cables placed in soil shall be at a minimum depth of 24 inches. Cables placed at ditch crossings shall be at a minimum depth of 36 inches. A warning tape shall be placed above the cable and approximately 18 inches below ground level. Cables placed in rock shall be at a minimum depth of 6 inches.

3.1.2.2 Above Ground Cable Protection

Cable installed on the outside of buildings, less than 8 feet above finished grade, shall be protected against physical damage.

3.1.2.3 Telephone Cable Bends

Telephone cable bends shall have a radius of not less than 10 times the cable diameter.

3.1.2.4 Penetrations

Penetrations in walls, ceilings or other parts of the building, made to provide for cable access, shall be caulked and sealed. Where conduits and ducts pass through fire walls, fire partitions, above grade floors, and fire rated chase walls, the penetration shall be sealed with fire stopping materials as specified in Section 07270 FIRESTOPPING. Fire stopped penetrations shall not compromise the fire rating of the walls or floors. All underground building entries shall be through waterproof facilities.

3.1.2.5 Cable Protection

Unless otherwise shown or specified, direct buried cable shall be protected in accordance with Table 300.5 of NFPA 70. Where additional protection is required, cable may be placed in galvanized iron pipe (GIP) sized on a maximum fill of 40% of cross-sectional area, or in concrete encased 4 inch PVC pipe. Conduits shall extend at least 6 inches per 12 inches burial depth beyond the edge of the surface where cable protection is required; all conduits shall be sealed on each end. Conduit may be installed by jacking or trenching. Trenches shall be backfilled with earth and mechanically tamped at 6 inch lifts so that the earth is restored to the same density, grade and vegetation as adjacent undisturbed material.

3.1.3 Underground Cable

Underground cable installation shall be accomplished in accordance with the requirements set forth in RUS REA Bulletin 1751F-641.

3.1.3.1 Cable Pulling

For cable installed in ducts and conduit, a cable feeder guide shall be used, between the cable reel and the face of the duct and conduit, to protect the cable and guide it into the duct and conduit as it is paid off the reel. As the cable is paid off the reel, it shall be inspected for jacket defects. Precautions shall be taken during installation to prevent the cable from being kinked or crushed. A pulling eye shall be attached to the cable and used to pull the cable through the duct and conduit system. Cable shall be hand fed and guided through each manhole. As the cable is paid off the reel into the cable feeder guide, it shall be sufficiently lubricated with a type of lubricant recommended by the cable manufacturer. Where the cable is pulled through a manhole, additional lubricant shall be applied at all intermediate manholes. Dynamometers or load-tension instruments shall be used to ensure that the pulling line tension does not exceed the installation tension value specified by the cable manufacturer. The mechanical stress placed upon a cable during installation shall not cause the cable to be twisted or stretched.

3.1.3.2 Penetrations for Cable Access

Penetrations in walls, ceilings or other parts of the building, made to provide for cable access, shall be caulked and sealed. Where conduits and ducts pass through fire walls, fire partitions, above grade floors, and fire rated chase walls, the penetration shall be sealed with fire stopping materials as specified in section 07270 FIRE STOPPING. Fire stopped penetrations shall not compromise the fire rating of the walls or floors. All underground building entries shall be through waterproof facilities.

3.1.3.3 Cable Bends

Telephone cable bends shall have a radius of not less than 10 times the cable diameter. Only large radius sweeps shall be used in conduit runs and shall not exceed a cumulative 90 degrees between manholes.

3.1.4 Not Used

3.1.5 Manhole and Ducts

Manhole and duct systems shall be installed in accordance with Section 16375 ELECTRICAL DISTRIBUTION SYSTEM, UNDERGROUND. Manholes shall be placed in line with the main duct. Splice cases shall be mounted in the center on the long sides. Lateral conduits shall exit the long sides near the corners.

3.1.5.1 Innerduct Installation

Innerduct shall be pulled through existing duct-manhole system in continuous sections. Splices, joints, couplings, or connections of any type will not be allowed between manholes. Innerduct shall be plugged at both ends with polyurethane foam duct seal; this material shall also be inserted between the innerduct and the duct if cables are placed in the innerducts. Only one cable shall be installed in a given innerduct. Existing and new unoccupied innerducts shall be trimmed leaving 2 inches exposed.

3.1.5.2 Pull Cord

Pull cords of 3/8 inch polypropylene shall be installed in all unused ducts and inner-ducts with a minimum of 2 feet spare cord protruding from each end.

3.1.6 Surge Protection

Except for fiber optic cable, all cables and conductors, which serve as communication lines, shall have surge protection meeting the requirements of RUS REA PE-60 installed at the entry facility.

3.2 SPLICING

3.2.1 Copper Conductor Splices

Copper conductor cable splicing shall be accomplished in accordance with RUS Bulletin 1753F-401(PC-2). Modular splicing shall be used on all cables larger than 25 pairs.

3.2.2 Fiber Optic Splices

Fiber optic splicing shall be in accordance with the manufacturer's recommendation; each splice shall have a loss of less than 0.1 dB.

3.3 GROUNDING

Except where specifically indicated otherwise, all exposed non-current carrying metallic parts of telephone equipment, cable sheaths, cable splices, and terminals shall be grounded. Grounding shall be in accordance with requirements of NFPA 70, Articles 800-33 and 800-40.

3.3.1 Ground Bars

3.3.1.1 Telecommunications Master Ground Bar (TMGB)

A copper TMGB shall be provided, in accordance with EIA ANSI/TIA/EIA-607, to be the hub of the basic grounding system by providing a common point of connection for ground from outside cable, MDF, and equipment. The TMGB shall have a ground resistance, including ground, of 10 ohms or less.

3.3.1.2 Telecommunications Ground Bar (TGB)

Copper TGB shall be provided in accordance with EIA ANSI/TIA/EIA-607 in each communications closet and room and each frame. The TGB shall be connected to the TMGB in accordance with EIA ANSI/TIA/EIA-607. Each TGB shall be connected to the TMGB by the most direct route utilizing a copper wire conductor with a total resistance of less than 0.01 ohms.

3.3.2 Incoming Outside Plant Cables

All incoming outside plant cable shields shall be bonded directly to the TMGB or the closest TGB.

3.3.3 Cable Stubs

All shields of cable stubs shall be bonded to a TGB located on the frame.

3.3.4 Shields

The shields of all incoming cables shall not be bonded across the splice to the cable stubs.

3.3.5 Protection Assemblies

The protector assemblies shall be mounted directly on the vertical frame ironwork. The assemblies mounted on each vertical frame shall be connected with a No. 6 AWG copper conductor to provide a low resistance path to the TGB.

3.3.6 Manholes

The shields of all cables in each manhole shall be bonded together by a bonding wire or ribbon. At intermediate manholes, where the cable is pulled through without a sheath opening, bonds are not required. If the manhole has a lacerating bonding ribbon, the shields of spliced cables shall be attached to it.

3.4 CUTOVER AND RECORDS

All necessary transfers and cutovers, shall be accomplished by the Contractor.

3.5 ACCEPTANCE TESTS

The Contractor shall provide all personnel, equipment, instrumentation, and supplies necessary to perform all required testing. Notification of any planned testing shall be given to the Contracting Officer at least 14 days prior to any test; testing shall not proceed until after the Contractor has received written Contracting Officer's approval of the test plans as specified. The test plans shall define all the tests required to ensure that the system meets technical, operational, and performance specifications. The test plans shall define milestones for the tests, equipment, personnel, facilities, and supplies required. The test plans shall identify the capabilities and functions to be tested.

3.5.1 Copper Conductor Cable

The following acceptance tests shall be performed in accordance with RUS REA PC-4:

a. Shield continuity.

b. Conductor continuity.

c. Conductor insulation resistance.

d. Structural return loss.

e. Cable insertion loss and loss margin at carrier frequencies.

f. Shield ground for single jacketed cables.

g. DC loop resistance.

3.5.2 Fiber Optic Cable

Two optical tests shall be performed on all optical fibers: Optical Time

Domain Reflectometry (OTDR) Test, and Attenuation Test. In addition, a Bandwidth Test shall be performed on all multi-mode optical fibers. These tests shall be performed on the completed end-to-end spans which include the near-end pre-connectorized single fiber cable assembly, outside plant as specified, and the far-end pre-connectorized single fiber cable assembly.

3.5.2.1 OTDR Test

The OTDR test shall be used to determine the adequacy of the cable installations by showing any irregularities, such as discontinuities, micro-bendings, improper splices, for the cable span under test. Hard copy fiber signature records shall be obtained from the OTDR for each fiber in each span and shall be included in the test results. The OTDR test shall be measured in both directions. A reference length of fiber, 3280 feet minimum, used as the delay line shall be placed before the new end connector and after the far end patch panel connectors for inspection of connector signature. The OTDR test shall be conducted in accordance with EIA ANSI/EIA-455-81A for single-mode fiber and EIA ANSI/EIA/TIA-455-78A for multi-mode fiber. Splice losses shall not exceed 0.1db. Attenuation losses shall not exceed 0.5 db/km at 1310 nm and 1550 nm for single-mode fiber. Attenuation losses shall not exceed 5.0 db/km at 850 nm and 1.5 db/km at 1300 nm for multi-mode fiber.

3.5.2.2 Attenuation Test

End-to-end attenuation measurements shall be made on all fibers, in both directions, using a 1300 nanometer light source at one end and the optical power meter on the other end to verify that the cable system attenuation requirements are met. The measurement method shall be in accordance with EIA ANSI/EIA/TIA-455-53A.

3.5.2.3 Bandwidth Test

The end-to-end bandwidth of all multi-mode fiber span links shall be measured by the frequency domain method. The bandwidth shall be measured in both directions on all fibers. The bandwidth measurements shall be in accordance with EIA ANSI/EIA/TIA-455-30B.

-- End of Section --