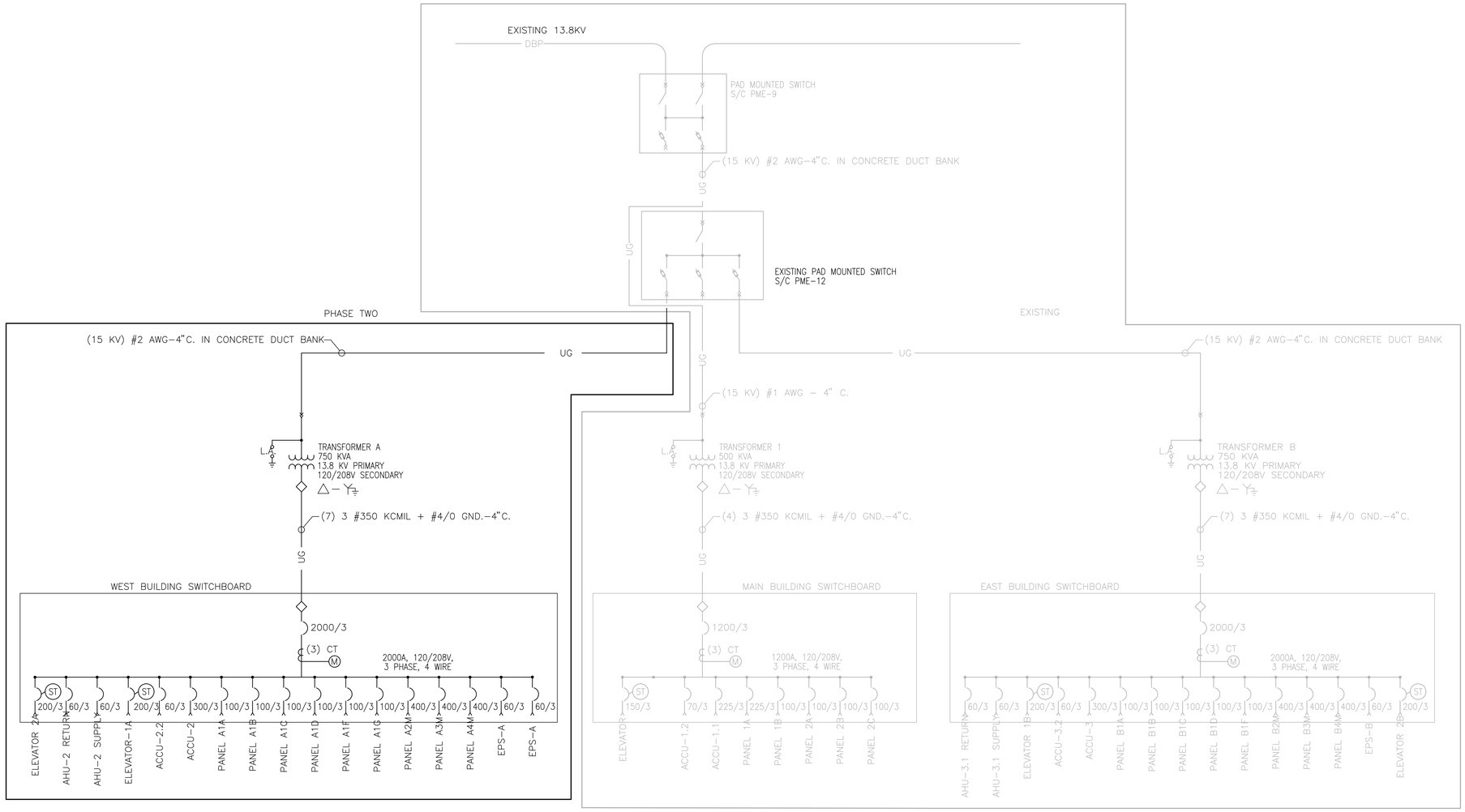

ONE-LINE DIAGRAM

NO SCALE

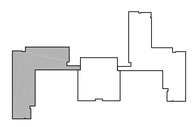

KEY PLAN

2000 1000 0 2000 4000

SCALE: 1 : 50

4000 2000 0 4000 8000

SCALE: 1 : 100

I hereby certify this drawing was prepared by me or under my direct supervision and that I am a duly registered architect under the laws of the State of Minnesota.

For: MEAD & HUNT, INC.

By:
Title: PROJECT MANAGER
Registration No: 22452

ALL SCALES SHOWN ARE BASED ON A STANDARD DRAWING SIZE OF 28" X 40" OR METRIC DRAWING SIZE OF 841mm X 594mm. IF ANY OTHER SIZE DRAWINGS ARE FURNISHED OR PLOTTED THE CONTRACTOR SHALL ADJUST THE SCALES ACCORDINGLY. THE CONTRACTOR SHALL ALSO ADVISE HIS SUB-CONTRACTORS OF THE ABOVE.

Revisions

Symbol	Descriptions	Date	Approved

Architect: ARCHITECTURAL ALLIANCE MINNEAPOLIS, MINNESOTA

Engineer: MEAD & HUNT MADISON, WISCONSIN

U.S. ARMY ENGINEER DISTRICT CORPS OF ENGINEERS OMAHA, NEBRASKA

Designed by: JAJ
Drawn by: LCP
Checked by: JAJ
Reviewed by: REC
Submitted by:

MINNEAPOLIS-ST.PAUL AFR — MINNESOTA

CONSOLIDATED LODGING FACILITY
– PHASE THREE –
2ND AND 3RD FLOOR
FIRE ALARM AND COMM. PLAN

Plot Scale Ratio: 1: 1
Design File: 8785E51.DWG
Date: 2-14-2002
Spec. No.: DACA 45-02-B-0008
Contract No.: DACA
Drawing Code: AF 721-315-03
Sheet reference number: E3.4

QJKL-990011P3

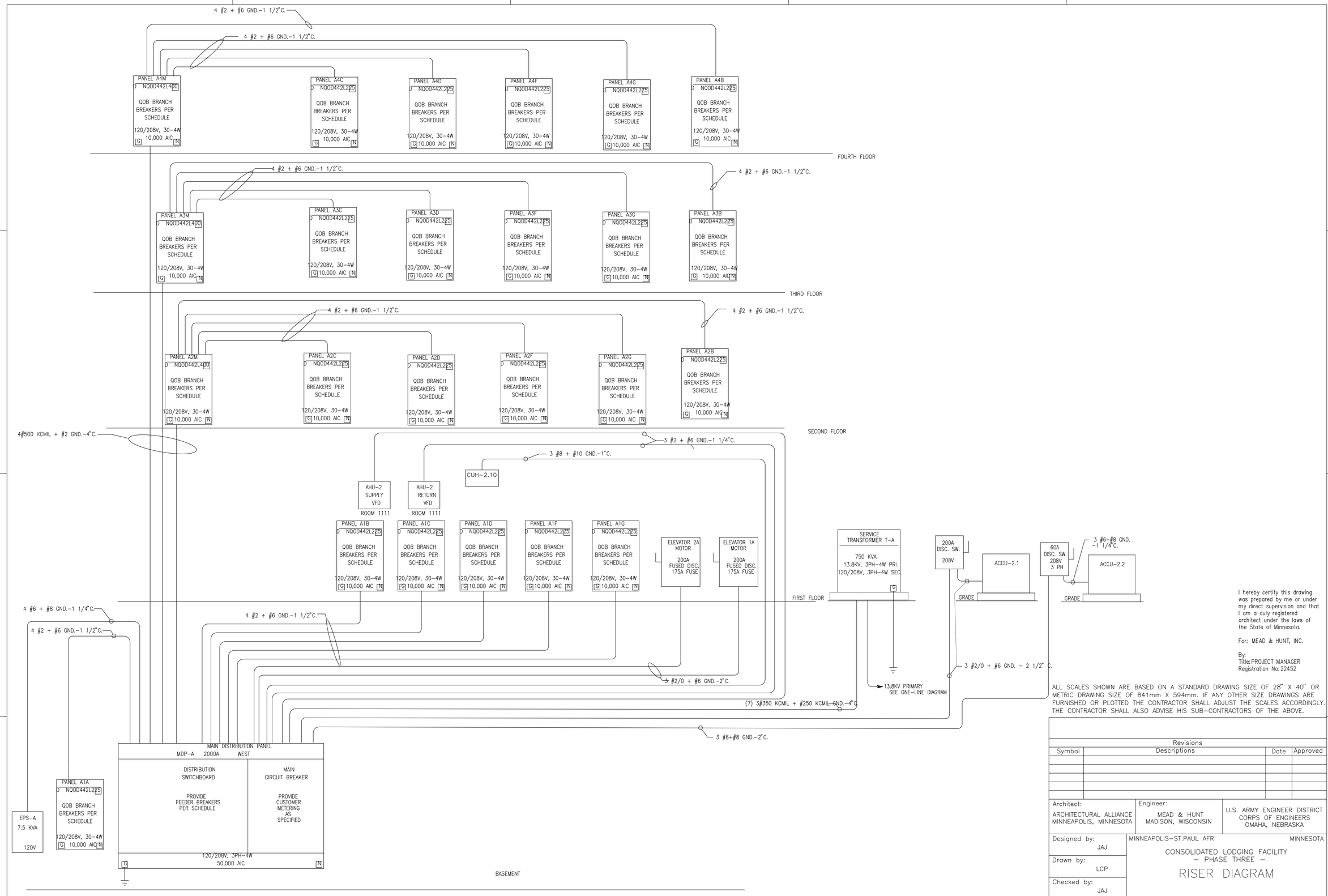

WEST WING RISER DIAGRAM

NO SCALE

I hereby certify this drawing was prepared by me or under my direct supervision and that I am a duly registered architect under the laws of the State of Minnesota.

For: MEAD & HUNT, INC.

By:
Title: PROJECT MANAGER
Registration No: 22452

ALL SCALES SHOWN ARE BASED ON A STANDARD DRAWING SIZE OF 28" X 40" OR METRIC DRAWING SIZE OF 841mm X 594mm. IF ANY OTHER SIZE DRAWINGS ARE FURNISHED OR PLOTTED THE CONTRACTOR SHALL ADJUST THE SCALES ACCORDINGLY. THE CONTRACTOR SHALL ALSO ADVISE HIS SUB–CONTRACTORS OF THE ABOVE.

Revisions

Symbol	Descriptions	Date	Approved

Architect: ARCHITECTURAL ALLIANCE MINNEAPOLIS, MINNESOTA

Engineer: MEAD & HUNT MADISON, WISCONSIN

U.S. ARMY ENGINEER DISTRICT CORPS OF ENGINEERS OMAHA, NEBRASKA

Designed by: JAJ
Drawn by: LCP
Checked by: JAJ
Reviewed by: REC
Submitted by:

MINNEAPOLIS–ST.PAUL AFR MINNESOTA

CONSOLIDATED LODGING FACILITY – PHASE THREE –

RISER DIAGRAM

Plot Scale Ratio: 1: 1
Design File: 8785E59.DWG
Date: 2–14–2002
Sheet reference number: E5.9
Spec. No.: DACA 45–02–B–0008
Contract No.: DACA
Drawing Code: AF 721–315–03

QJKL-990011P3

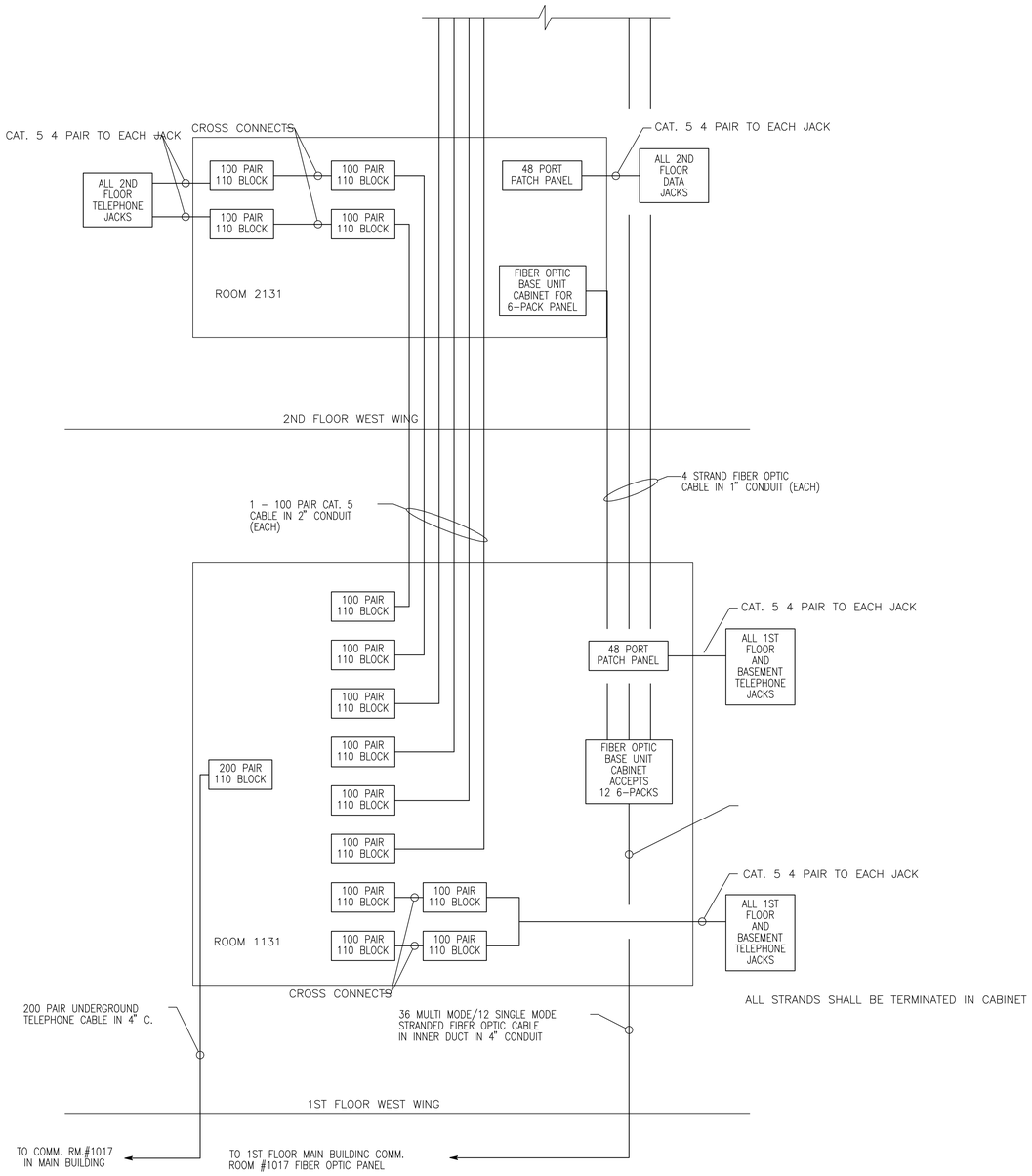

WEST WING COMMUNICATIONS RISER

NO SCALE

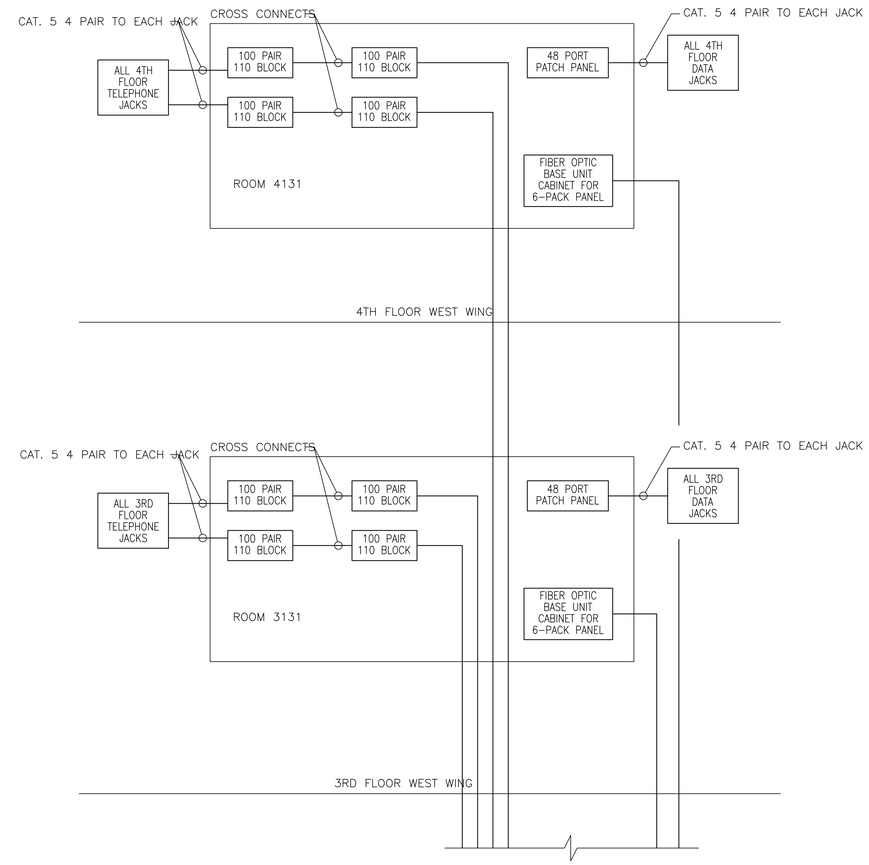

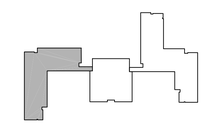

KEY PLAN

N

2000 1000 0 2000 4000

SCALE: 1 : 50

4000 2000 0 4000 8000

SCALE: 1 : 100

I hereby certify this drawing was prepared by me or under my direct supervision and that I am a duly registered architect under the laws of the State of Minnesota.

For: MEAD & HUNT, INC.

By:
Title: PROJECT MANAGER
Registration No: 22452

ALL SCALES SHOWN ARE BASED ON A STANDARD DRAWING SIZE OF 28" X 40" OR METRIC DRAWING SIZE OF 841mm X 594mm. IF ANY OTHER SIZE DRAWINGS ARE FURNISHED OR PLOTTED THE CONTRACTOR SHALL ADJUST THE SCALES ACCORDINGLY. THE CONTRACTOR SHALL ALSO ADVISE HIS SUB-CONTRACTORS OF THE ABOVE.

Revisions

Symbol	Descriptions	Date	Approved

Architect: ARCHITECTURAL ALLIANCE MINNEAPOLIS, MINNESOTA

Engineer: MEAD & HUNT MADISON, WISCONSIN

U.S. ARMY ENGINEER DISTRICT CORPS OF ENGINEERS OMAHA, NEBRASKA

MINNEAPOLIS-ST.PAUL AFR — MINNESOTA

CONSOLIDATED LODGING FACILITY
- PHASE THREE -
COMMUNICATIONS RISER DIAGRAM

Designed by: JAJ
Drawn by: LCP
Checked by: JAJ
Reviewed by: RC
Submitted by:

Plot Scale Ratio: 1: 1
Design File: 8785E510.DWG
Date: 2-14-2002
Sheet reference number:
Spec. No.: DACA 45-02-B-0008
Drawing Code: AF 721-315-03
Contract No.: DACA
E5.10

QJKL-990011P3

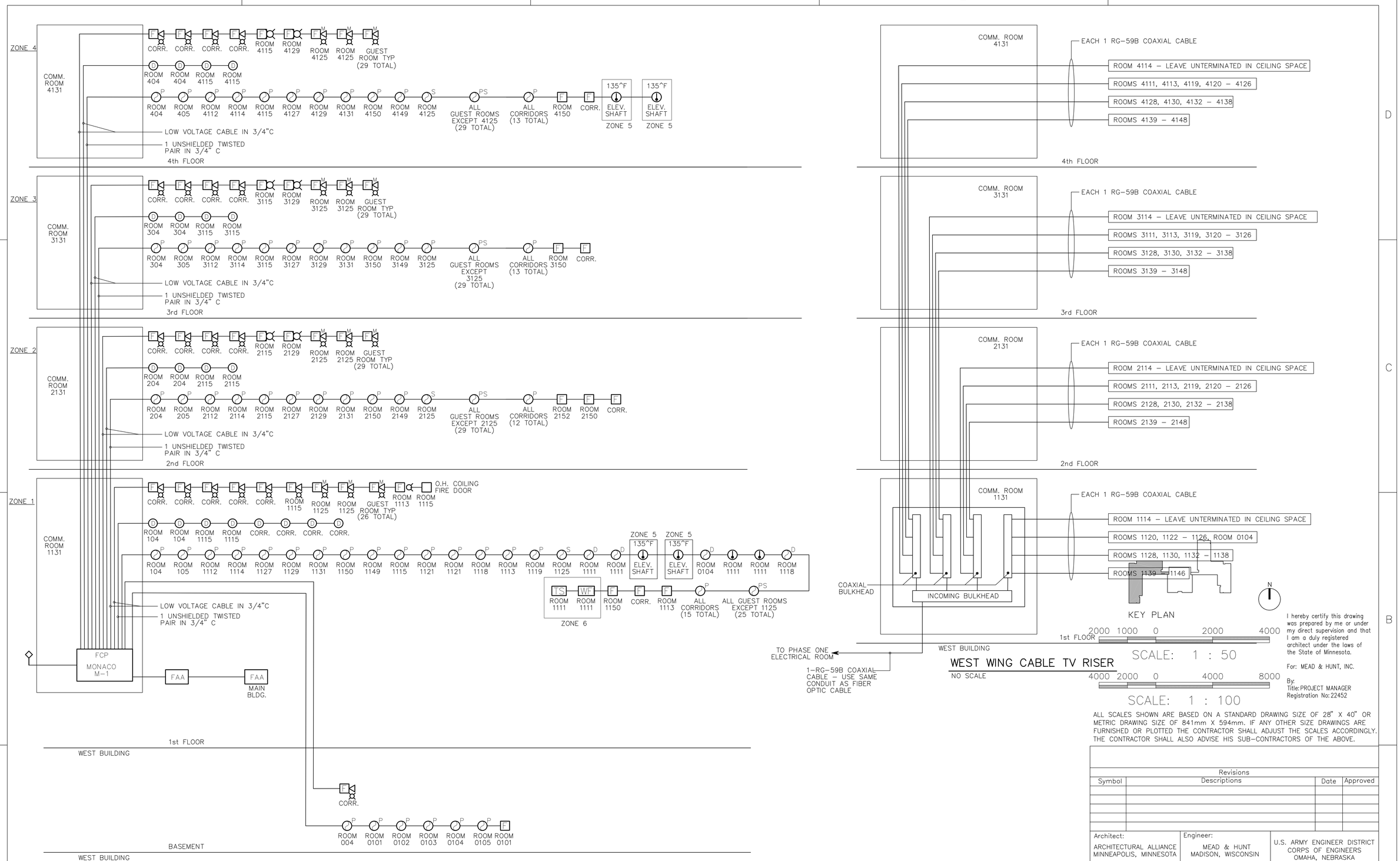

WEST WING FIRE DETECTION SYSTEM RISER

NO SCALE

WEST WING CABLE TV RISER

NO SCALE

I hereby certify this drawing was prepared by me or under my direct supervision and that I am a duly registered architect under the laws of the State of Minnesota.

For: MEAD & HUNT, INC.

By:
Title: PROJECT MANAGER
Registration No: 22452

ALL SCALES SHOWN ARE BASED ON A STANDARD DRAWING SIZE OF 28" X 40" OR METRIC DRAWING SIZE OF 841mm X 594mm. IF ANY OTHER SIZE DRAWINGS ARE FURNISHED OR PLOTTED THE CONTRACTOR SHALL ADJUST THE SCALES ACCORDINGLY. THE CONTRACTOR SHALL ALSO ADVISE HIS SUB-CONTRACTORS OF THE ABOVE.

Revisions

Symbol	Descriptions	Date	Approved

Architect: ARCHITECTURAL ALLIANCE MINNEAPOLIS, MINNESOTA

Engineer: MEAD & HUNT MADISON, WISCONSIN

U.S. ARMY ENGINEER DISTRICT CORPS OF ENGINEERS OMAHA, NEBRASKA

Designed by: JAJ
Drawn by: LCP
Checked by: JAJ
Reviewed by: REC
Submitted by:

MINNEAPOLIS–ST.PAUL AFR MINNESOTA

CONSOLIDATED LODGING FACILITY
– PHASE THREE –
FIRE DETECTION & CABLE TV RISER DIAGRAMS

Plot Scale Ratio: 1: 1
Design File:
Date: 2–14–2002
Sheet reference number: E5.11
Spec. No.: DACA 45–02–B–0008
Contract No.: DACA
Drawing Code: AF 721–315–03

QJKL-990011P3

ELECTRICAL NOTES

1. AN EMERGENCY POWER SUPPLY (EPS) SHALL BE INSTALLED TO PROVIDE EMERGENCY POWER TO EGRESS DESIGNATED FIXTURES (LABELED "NL" ON PLANS) AND EXIT LIGHTS. THE EPS SHALL INCLUDE BREAKERS AS SHOWN ON EPS SCHEDULE . ALL EGRESS DESIGNATED FIXTURES AND EXIT LIGHTS SHALL BE WIRED DIRECTLY TO THE EPS BREAKERS. EACH FLOOR SHALL BE WIRED TO A DIFFERENT BREAKER. NO OTHER LOADS MAY BE FED FROM THE EPS WITHOUT APPROVAL OF THE ENGINEER. ALL EPS LOADS SHALL BE WIRED WITH MINIMUM #10 WIRE.
2. PROVIDE 3.5 INCH CONCRETE PAD UNDER ALL FLOOR MOUNTED ELECTRICAL EQUIPMENT, INCLUDING MAIN SWITCHBOARDS, AND TRANSFORMERS, UNLESS NOTED OTHERWISE.
3. PROVIDE 3/4 INCH PAINTED PLYWOOD BACKUP BOARDS FOR ALL WALL-MOUNTED EQUIPMENT, INCLUDING PANEL-BOARDS, VFD=S, COMMUNICATION, AND CABLE TV EQUIPMENT.
4. CONTRACTOR SHALL COORDINATE WITH ALL TRADES WHEN USING CEILING SPACE.
5. CONTRACTOR SHALL VERIFY WITH THE ARCHITECT INSTALLATION HEIGHT OF ALL RECEPTACLES LOCATED ABOVE MILL WORK.
6. ALL BATHROOM RECEPTACLES SHALL BE GFI AND SHALL BE INSTALLED AT 45" A.F.F. TO CENTER.
7. ELEVATOR HAS TWO 120V CIRCUITS FED TO IT, ONE FOR CONTROL PANEL POWER AND THE OTHER FOR CAB LIGHTING. A CONVENIENCE OUTLET SHALL BE INSTALLED NEAR THE CONTROL PANEL USING THE CONTROL PANEL CIRCUIT.
8. HEAT DETECTORS LOCATED IN THE ELEVATOR SHAFTS SHALL BE INTERLOCKED WITH THE ELEVATOR MAIN SHUNT TRIP BREAKERS, SUCH THAT IF A DETECTOR IS SET OFF THE BREAKER WILL SHUT OFF AUTOMATICALLY.
9. CONTRACTOR SHALL CONFIRM WITH THE MANUFACTURER THAT ALL NE CESSARY EQUIPMENT AND CONNECTIONS FOR THE ELEVATOR HAVE BEEN INCLUDED. CONTRACTOR SHALL BE RESPONSIBLE FOR INSTALLING ELEVATOR AS PER N.E.C., N.F.P.A., AND LOCAL CODES.
10. CONTRACTOR SHALL INSTALL THE CORRECT MATCHING RECEPTACLE FOR ALL THE PTAC UNITS. UNITS RATED FOR A 20 AMP CIRCUIT REQUIRE A NEMA 6-20R, AND UNITS RATED FOR A 30 AMP CIRCUIT REQUIRE A NEMA 6-30R. CONTRACTOR SHALL VERIFY EXACT MOUNTING LOCATIONS WITH ARCHITECT.
11. CONTRACTOR SHALL PROVIDE A TELECOMMUNICATION MAIN GROUND BUS BAR(TMGB) AT THE MAIN COMMUNICATION CENTER, BUS BAR SHALL BE 1/4" X 4" X 20" LONG INSULATED GROUND BAR.

FIRE ALARM SYSTEM NOTES

1. THE SYSTEM SHALL BE PROGRAMMED FOR SEPARATE ZONES AS SHOWN ON RISER DIAGRAM. EACH FLOOR SHALL BE A SEPARATE ZONE AND THE FIRE SUPPRESSION SYSTEM COMPONENTS(WATER FLOW & TAMPER SWITCH) SHALL HAVE THERE OWN ZONES.
2. THE HEAT DETECTORS IN THE ELEVATOR SHAFT SHALL BE LOCATED NO MORE THAN TWO FEET FROM THE SPRINKLER HEAD AND SHALL BE PLACED TO ENSURE A RESPONSE PRIOR TO ANY SPRINKLER HEAD OPERATION UNDER A VARIETY OF FIRE GROWTH RATE SCENARIOS THEY SHALL BE INTERLOCKED WITH THE ELEVATOR SHUNT TRIP BREAKER SUCH THAT IF DETECTOR IS SET OFF THE BREAKER WILL SHUT OFF AUTOMATICALLY. THE COMPLETE SYSTEM INSTALLATION SHALL CONFORM TO NFPA SECTION 3-8.
3. EACH GUEST ROOM HAS A STAND ALONE SMOKE DETECTOR THAT IS INDEPENDENT OF THE MAIN FIRE ALARM SYSTEM. AUDIBLE ALARM WILL BE SOUNDED IN ROOM ONLY, THERE SHALL BE NO NOTIFICATION TO MAIN SYSTEM.
4. EACH ADA DESIGNATED ROOM SHALL HAVE A STAND ALONE SMOKE DETECTOR WITH AUDIBLE AND VISUAL NOTIFICATION WHEN IN ALARM. ALSO A VISUAL NOTIFICATION DEVICE SHALL BE LOCATED IN EACH SEPARATE AREA OF THESE ROOMS AND SHALL BE ACTIVATED BY THE MAIN FIRE ALARM SYSTEM ALONG WITH ALL OTHER AUDIBLE AND VISUAL DEVICES DURING A BUILDING ALARM.
5. SMOKE DETECTORS SHALL BE MOUNTED ON THE WALLS OF ALL GUEST ROOMS AND ON THE CEILINGS OF ALL OTHER AREAS UNLESS SHOWN OTHERWISE OR APPROVED BY THE ARCHITECT AND THE ENGINEER.
6. LOCATIONS AND QUANTITIES OF SMOKE AND HEAT DETECTORS AND ANNUNCIATING DEVICES ON PLANS MAY NEED TO BE VARIED DUE TO MANUFACTURER SPECIFIC LIMITATIONS, CONTRACTOR IS RESPONSIBLE FOR PROVIDING ADDITIONAL DEVICES REQUIRED BY MANUFACTURER TO CONFORM TO N.F.P.A. AND ALL LOCAL CODES. CONTRACTOR SHALL COORDINATE INSTALLATION WITH ALL OTHER TRADES TO AVOID SPACE CONFLICTS.
7. THE FIRE ALARM CONTROL PANEL FOR THIS BUILDING SHALL HAVE AN ANNUNCIATOR LOCATED AT THE FRONT DESK OF THE PHASE 1 BUILDING AND AT THE ENTRANCE OF EACH AS BUILDING AS SHOWN ON THE DRAWINGS. ANNUNCIATOR PANEL SHALL HAVE A BUTTON PROGRAMMED TO SERVE AS A MANUAL ACTIVATION BUTTON ALLOWING THE SYSTEM TO BE ACTIVATED BY FRONT DESK PERSONNEL. VERIFY EXACT LOCATION OF ANNUNCIATORS WITH ARCHITECT.
8. FIRE DOORS LOCATED IN CORRIDORS SHALL HAVE DOOR HOLDERS CONTROLLED BY THE FIRE ALARM SYSTEM.
9. CONTRACTOR SHALL COORDINATE USE OF THE PIPE CHASES WITH ALL OTHER TRADES.
10. THERE SHALL BE A SMOKE DETECTOR INSTALLED OUTSIDE EVERY ELEVATOR DOOR, THERE SHALL ALSO BE A SMOKE DETECTOR IN ELEVATOR EQUIPMENT ROOM, ALL THESE DETECTORS SHALL EACH HAVE AN OUTPUT WIRED TO THE ELEVATOR CONTROL PANEL IN ADDITION TO THE FIRE ALARM PANEL. WHEN ANY OF THESE UNITS ARE IN ALARM THE ELEVATOR SHALL BE RETURNED TO THE FIRST FLOOR AND STAY THERE UNTIL RESET OR OVERRIDDEN BY AUTHORIZED PERSONNEL.
11. THE OVERHEAD COILING FIRE DOOR SHALL BE WIRED TO THE FIRE ALARM CONTROL PANEL(FACP). THE FACP SHALL BE PROGRAMMED TO RELEASE THE DOOR WHEN THE SMOKE DETECTOR DIRECTLY IN FRONT OF OR BEHIND THE DOOR IS IN AN ALARM STATE.
12. ALL SMOKE DETECTORS IN CORRIDORS SHALL BE CENTERED ON THE CEILING.
13. COMPLETE FIRE ALARM SYSTEM SHALL COMPLY WITH NFPA, MIL-HDBK-1008C, AND ALL LOCAL CODES.

CABLE TV NOTES

1. EACH COAXIAL CABLE SHALL BE TEE CONNECTED TO ROOMS AS SHOWN ON RISER DIAGRAM.
2. ANY SIGNAL BOOSTERS INSTALLED SHALL BE MOUNTED TO CABLE BACK BOARD.
3. CONTRACTOR SHALL COORDINATE CABLE RUNS IN PIPE CHASE WITH ALL OTHER TRADES.

GENERAL NOTES

1. WORK PERFORMED INCLUDES ALL LABOR, MATERIALS AND EQUIPMENT REQUIRED TO INSTALL A COMPLETE ELECTRICAL SYSTEM AS INDICATED ON THESE DRAWINGS AND AS SPECIFIED.
2. ALL EQUIPMENT SHOWN ON THE DISTRIBUTION RISER DIAGRAMS IS NEW AND SHALL BE PROVIDED PER SPECIFICATIONS BY THE ELECTRICAL CONTRACTOR UNLESS SPECIFICALLY INDICATED OTHERWISE.
3. ALL POWER RECEPTACLES, INCLUDING DUPLEX RECEPTACLES, SHALL BE MOUNTED AT HEIGHTS ABOVE FINISHED FLOOR AS SPECIFIED IN ELECTRICAL SPECIFICATIONS.
4. ALL LIGHT SWITCHES SHALL BE MOUNTED AT HEIGHTS ABOVE FINISHED FLOOR AS SPECIFIED IN ELECTRICAL SPECIFICATIONS.
5. ALL TELEPHONE AND DATA OUTLETS SHALL BE MOUNTED AT HEIGHTS ABOVE FINISHED FLOOR AS SPECIFIED IN ELECTRICAL SPECIFICATIONS.
6. PROVIDE FUSED DISCON NECT SWITCHES FOR ALL MOTORS, UNLESS NOTED OTHERWISE. PROVIDE MOTOR STARTERS FOR ALL MOTORS WHICH ARE NOT PART OF A PACKAGED UNIT BEING FURNISHED BY THE EQUIPMENT SUPPLIER. WHERE ELECTRICAL CONTRACTOR SUPPLIES BOTH FUSED DISCONNECT SWITCH AND MOTOR STARTER, HE SHALL PROVIDE A FUSED COMBINATION STARTER UNIT.
7. SEE SITE DRAWING FOR ADDITIONAL ELECTRICAL WORK.
8. CONTRACTOR SHALL CLARIFY ANY DISCREPANCIES OR ITEMS THAT ARE UNCLEAR BEFORE SUBMITTING BID.
9. ALL ROOMS SHALL BE HAVE FIXTURES AND MOUNTING HE IGHTS THAT ARE ADA COMPLIANT.

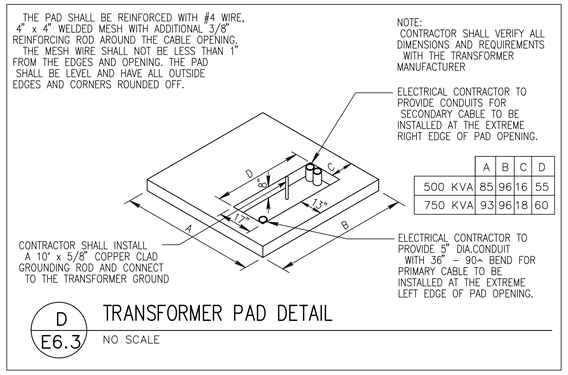

	A	B	C	D
500 KVA	85	96	16	55
750 KVA	93	96	18	60

D / E6.3 TRANSFORMER PAD DETAIL
NO SCALE

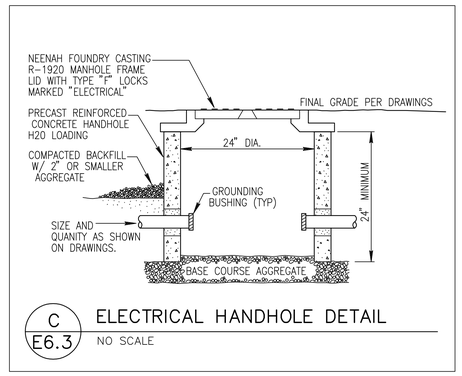

C / E6.3 ELECTRICAL HANDHOLE DETAIL
NO SCALE

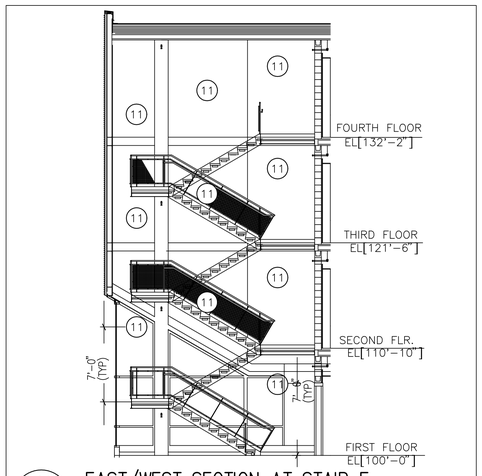

H / E6.3 EAST/WEST SECTION AT STAIR E
NO SCALE

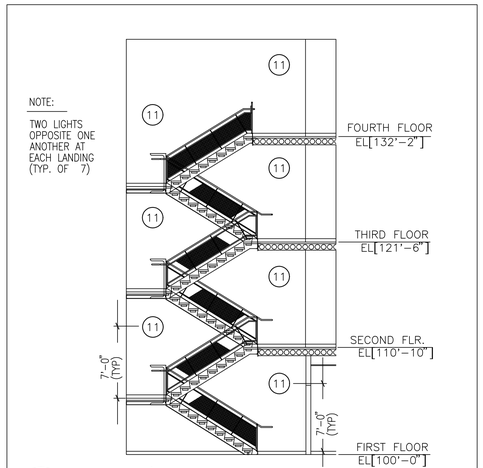

I / E6.3 NORTH/SOUTH SECTION AT STAIR D
NO SCALE

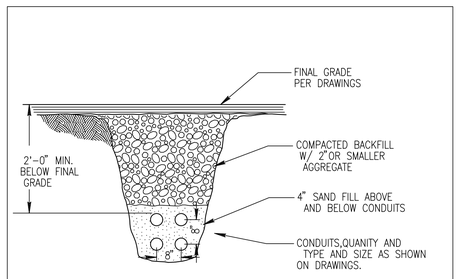

G / E6.3 UNDERGROUND CONDUIT DETAIL
NO SCALE

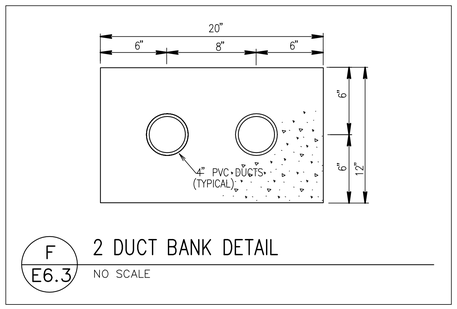

F / E6.3 2 DUCT BANK DETAIL
NO SCALE

I hereby certify this drawing was prepared by me or under my direct supervision and that I am a duly registered architect under the laws of the State of Minnesota.

For: MEAD & HUNT, INC.

By:
Title: PROJECT MANAGER
Registration No: 22452

ALL SCALES SHOWN ARE BASED ON A STANDARD DRAWING SIZE OF 28" X 40" OR METRIC DRAWING SIZE OF 841mm X 594mm. IF ANY OTHER SIZE DRAWINGS ARE FURNISHED OR PLOTTED THE CONTRACTOR SHALL ADJUST THE SCALES ACCORDINGLY. THE CONTRACTOR SHALL ALSO ADVISE HIS SUB-CONTRACTORS OF THE ABOVE.

Revisions

Symbol	Descriptions	Date	Approved

Architect: ARCHITECTURAL ALLIANCE MINNEAPOLIS, MINNESOTA

Engineer: MEAD & HUNT MADISON, WISCONSIN

U.S. ARMY ENGINEER DISTRICT CORPS OF ENGINEERS OMAHA, NEBRASKA

MINNEAPOLIS-ST.PAUL AFR — MINNESOTA

CONSOLIDATED LODGING FACILITY
- PHASE THREE -

ELECTRICAL NOTES AND DETAILS

Designed by: JAJ
Drawn by: FCB
Checked by: JAJ
Reviewed by: REC
Submitted by:

Plot Scale Ratio: 1: 1
Design File: 8785E63.DWG
Date: 2-14-2002
Spec. No.: DACA 45-02-B-0008
Contract No.: DACA
Drawing Code: AF 721-315-03
Sheet reference number: E6.3

QJKL-990011P3

NO.	MANUFACTURER	CATALOG NUMBER	LAMPS	REMARKS
1	LIGHTOLIER LITHONIA	8056WH-7218H-T120 AF 2/18 DTT-8AR 120-GEB ESI	2-PLC-18W	2-18 WATT LAMPS, 120V, 7" COMPACT FLUORESCENT RECESSED DOWNLIGHT WITH WHITE REFLECTOR.
2	NOT USED			
3	LITHONIA METALUX HOLOPHANE	2PM3-G-B-3-32-18LD-120-GEB10-LATC 2EP3GX-332-S36I-120-TEB81-EQ-PAF-2BC EPS24DND36EP11EQ	3-F32T8/SP41	2X4 FOOT, 3-LAMP, T-8 PARABOLIC 18 CELL FLUORESCENT TROFFER WITH 120V ELECTRONIC BALLAST, T-BAR SCREW ON SAFETY CLIPS, AND PAINTED AFTER FABRICATION.
4	COLUMBIA LIGHT CONCEPTS	EB-8RLH120MOT-UL/CSA 11885-25-MOTRN	2-F25T8/SP41	3 FOOT ARCHITECTURAL FLUORESCENT WALL BRACKET WITH 2 LAMPS. SUITABLE FOR DAMP LOCATIONS. ELECTRONIC BALLAST <10%THD
5	NOT USED			
6	LITHONIA METALUX HOLOPHANE	2SP-G-2-32-A12125-120-GEB10-PAF-LATC 2GC-232A125-120-TEB81-EQ-PAF EGS24DNB12042EP11EQ	2-F32T8/SP41	2X4 FOOT, 2-LAMP, T-8 FLUORESCENT TROFFER WITH 120V ELECTRONIC BALLAST, .125 ACRYLIC LENS, T-BAR SCREW ON SAFETY CLIPS, AND PAINTED AFTER FABRICATION.
7	WILLIAMS	AWN4-232-EB8-120-PAF	2-F32T8/SP41	4-FOOT, 2-LAMP, T-8 FLUORESCENT WRAPAROUND.
8	LITHONIA METALUX COLOMBIA	PV-2-32-120-GEB10-HC-WGAFPV DIVM-232-120-TEB81-AYC-CHAIN/SET-WG/DI-4FT-PAF KL4-232-VR-EB8LH120-KLWG4-PAF-KHC	2-F32T8/SP41	4-FOOT, T-8, 2-LAMP INDUSTRIAL FLUORESCENT WITH 120V ELECTRONIC BALLAST, 36" CHAIN HANGER SET, AND WIRE GUARD. PAINTED AFTER FABRICATION.
9	WINONA (800) 328-5291	4615-F-MOD THIS IS A CUSTOM FIXTURE TO MATCH EXISTING IN PHASE II	2-13W TWIN TUBE,GX23 BASE	ARCHITECURAL WALL SCONCE 2-13WATT COMPACT FLUORESCENT LAMPS. EXTRUDED PROFILE AND ACRYLIC DIFFUSER. SINGLE PERFORATED METAL OVERLAY.
10	NOT USED			
11	KENALL LITHONIA	MR13ED-P-MW-42P-1-120 VGR2-42TRT-120-DWHG-ES1	1-PL-T 42W/35/4P/ALTO	ARCHITECTURAL 13" ROUND WALL SURFACE MOUNT WITH VERTICAL EYELID. 42 WATT COMPACT FLUORESCENT, WHITE IN COLOR, 120V BALLAST, POLYCARBONATE PEARLESCENT LENS, MARINE GRADE DIE CAST ALUMINUM HOUSING, MOUNTING SURFACE GASKET AND STAINLESS STEEL FASTENERS. UL LISTED FOR WET LOCATIONS.
12	LITHONIA HOLOPHANE PRESCOLITE	LE-SW-1R-120/277 MCAELAMBARSN EDC-1-R-EN-BBA	INCLUDED	LED CAST ALUMINUM SINGLE STENCIL FACED EXIT WITH BLACK ON BRUSHED ALUMINUM HOUSING, RED LETTERS, 120V OPERATION, AND ARROWS SHOWN ON DRAWINGS.
13	NOT USED			
14	NOT USED			
15	NOT USED			
16	NOT USED			
17	NOT USED			
18	NOT USED			
19	PASS & SEYMOUR LEVITON	44 9875	1-100-A19	200W RATED, 120V, KEYLESS PORCELAIN LAMPHOLDER WITH SCREW TERMINALS.
20	RUUD	DU505SYM-D	1-50W ED17	SEALED WELL LIGHT 120V 50 WATT HIGH PRESSURE SODIUM, FUSED. WITH EXTERNAL LINEAR GRATE # DAU-LG. UL LISTED FOR WET LOCATION.
21	NOT USED			
22	NOT USED			
23	NOT USED			
24	LITHONIA	TWL-35S-120	1-LU35	WALL PACK 35W HIGH PRESSURE SODIUM. POLYCARBONATE LENS, DIE-CAST BACKPLANE, STAINLESS STEEL EXTERNAL HARDWARE, GASKETED AND SEALED HOUSING, 120V FUSED BALLAST. UL LISTED FOR WET LOCATIONS

LIGHTING NOTES

1. ALL SUBMITTED FIXTURES SHALL BE OF THE TYPE AND QUALITY OF THE MANUFACTURER LISTED FIXTURE AS SHOWN ON THE FIXTURE SCHEDULE.
2. ALL FIXTURES IN GUEST ROOMS SHALL BE WIRED TO THE JUNCTION BOX USED BY RECEPTACLE CIRCUITS.
3. FIXTURES #4 ,#9 & #11 ARE ALL WALL MOUNTED, EXACT MOUNTING LOCATION AND HEIGHT SHALL BE VERIFIED BY THE ARCHITECT.
4. ALL FIXTURES DESIGNATED WITH NL ARE NIGHT LIGHTS AND SHALL BE WIRED ALONG WITH THE EXIT SIGNS TO THE EPS.
5. ALL FIXTURE TYPES #8 SHALL BE CHAIN HUN G AT 10' A.F.F.UNLESS INDICATED OTHERWISE.
6. ALL FIXTURE TYPES #24 SHALL BE WIRED THROUGH A LIGHTING CONTRACTOR. CONTACTOR SHALL BE WIRED TO ONE CHANNEL OF A 4-CHANNEL TIME CLOCK AND BE LOCATED IN THE ELECTRICAL ROOM.
7. FIXTURE TYPES #20 SHALL ALL BE WIRED THROUGH A LIGHTING CONTRACTOR WHICH IS CONTROLLED BY A TIME CLOCK.
8. ALL MOTION SENSORS IN MULTIPURPOSE ROOMS SHALL BE CEILING MOUNTED WITH DUEL LEVEL SWITCHING INSTALLED WHERE A REGULAR LIGHT SWITCH WOULD BE INSTALLED, LAMPS WITHIN THESE FIXTURES SHALL BE TANDEM WIRED TO PROVIDE TWO SWITCHED CIRCUITS. INSTALL AS SHOWN ON DRAWINGS UNLESS SENSOR MANUFACTURER RECOMMENDS A MORE ADVANTAGEOUS LOCATION CLOSE TO DRAWING LOCATION. VERIFY ACCEPTABILITY OF ANY NEW LOCATIONS WITH THE ARCHITECT. MANUAL SWITCHES SHALL BE AN OVERRIDE OFF ONLY.
9. LOCATION OF FIXTURES IN MECHANICAL AND ELECTRICAL ROOMS ARE APPROXIMATE, CONTRACTOR SHALL COORDINATE EXACT LOCATION WITH ALL TRADES TO AVOID CONFLICTS, FIXTURES SHOULD MAINTAIN INITIAL SHOWN SPACING AS BEST AS POSSIBLE.
10. CONTRACTOR SHALL VERIFY EXACT MOUNTING HEIGHT AND LOCATION OF FIXTURE #24 WITH THE ARCHITECTURAL DRAWINGS.
11. VERIFY FIXTURE LAYOUT IN STAIRS WITH DETAIL AND ARCHITECTURAL DRAWINGS.
12. REFER TO REFLECTED CEILING PLAN FOR EXACT FIXTURE LOCATIONS.

I hereby certify this drawing was prepared by me or under my direct supervision and that I am a duly registered architect under the laws of the State of Minnesota.

For: MEAD & HUNT, INC.

By:
Title: PROJECT MANAGER
Registration No: 22452

ALL SCALES SHOWN ARE BASED ON A STANDARD DRAWING SIZE OF 28" X 40" OR METRIC DRAWING SIZE OF 841mm X 594mm. IF ANY OTHER SIZE DRAWINGS ARE FURNISHED OR PLOTTED THE CONTRACTOR SHALL ADJUST THE SCALES ACCORDINGLY. THE CONTRACTOR SHALL ALSO ADVISE HIS SUB-CONTRACTORS OF THE ABOVE.

Revisions

Symbol	Descriptions	Date	Approved

Architect:
ARCHITECTURAL ALLIANCE
MINNEAPOLIS, MINNESOTA

Engineer:
MEAD & HUNT
MADISON, WISCONSIN

U.S. ARMY ENGINEER DISTRICT
CORPS OF ENGINEERS
OMAHA, NEBRASKA

Designed by: JAJ
Drawn by: LCP
Checked by: JAJ
Reviewed by: JAJ
Submitted by:

MINNEAPOLIS-ST.PAUL AFR — MINNESOTA

CONSOLIDATED LODGING FACILITY
- PHASE THREE -

ELECTRICAL
FIXTURE SCHEDULE

Plot Scale Ratio: 1: 1
Design File: 8785E64.DWG
Date: 2-14-2002
Sheet reference number: E6.4
Spec. No.: DACA 45-02-B-0008
Contract No.: DACA
Drawing Code: AF 721-315-03

QJKL-990011P3

1EPS-A_SCH

PANEL: EPS-A SCH — OC DEVICE TYPE: Breaker — ENCLOSURE: NEMA 1 — MAINS(A): MLO — BUS RATING(A): 100
LOCATION: — DEVICE FAMILY: Bolt On — MOUNTING: Free Standing — WIRING: 3 Wire+Grnd — WITHSTAND(A): 10000
FED FROM: EPS-A — VOLTAGE: 208 / 120 — FAULT CURRENT(A): 30692

OC AMPS P	NOTES	DESCRIPTION	DEMAND CODE	VA	CKT	PHASE LOADS VA A	B	C	CKT	VA	DEMAND CODE	DESCRIPTION	NOTES	OC AMPS P
15 1	USE MIN. #10 W	ALL NL & EXIT 1ST FL	LIGHTIN	960	1	2281			2	1321	BUILDIN	FIRE ALARM CP	& LOCAL BELL	20 1
15 1	USE MIN. #10 W	ALL NL & EXIT 2ND FL	LIGHTIN	910	3		1820		4	910	LIGHTIN	ALL NL & EXIT 4TH FL	USE MIN. #10 W	15 1
15 1	USE MIN. #10 W	ALL NL & EXIT 3RD FL	LIGHTIN	910	5			1510	6	600	LIGHTIN	ALL NL & EXIT Basmnt	USE MIN. #10 W	15 1
20 1		ELEV. KEY SWITCH	BUILDIN	360	7	1201			8	841	BUILDIN	COMM RCP 1131		20 1
20 1		SPARE		0	9		841		10	841	BUILDIN	COMM RCP 2131		20 1
20 1		SPARE		0	11			841	12	841	BUILDIN	COMM RCP 3131		20 1
0 1		SPACE		0	13	841			14	841	BUILDIN	COMM RCP 4131		20 1
0 1		SPACE		0	15		0		16	0		SPACE		0 1
					17				18					

ALL CONNECTED	KVA	AMPS	* PHASE TOTALS	VA	AMPS	BUS TOTALS	KVA	
TOTAL CONNECTED	9.3	25.9	* PHASE A	4322.5	36.0	CONNECTED	9.3	DATE: Feb 12, 2002
TOTAL DEMAND	5.6	15.4	* PHASE B	2660.6	22.2	DEMAND	5.6	TIME: 11:07:12
TOTAL DESIGN	6.6	18.4	* PHASE C	2350.6	19.6	DESIGN	6.6	

1MDP-A_SCH

PANEL: MDP-A SCH — OC DEVICE TYPE: Breaker — ENCLOSURE: NEMA 1 — MAINS(A): MLO — BUS RATING(A): 2000
LOCATION: — DEVICE FAMILY: Bolt On — MOUNTING: Free Standing — WIRING: 4 Wire — WITHSTAND(A): 100000
FED FROM: MDP-A BUS — VOLTAGE: 208 / 120 — FAULT CURRENT(A): 37023

CUBICLE NO	DESCRIPTION	CONNECTED kVA	DEMAND kVA	DESIGN kVA	DESIGN AMPS	OC DEVICE TRIP SIZE	NOTES
1	PNL AIA	27	15	16	45	100	FC-100AF/100AT
2	PNL A1B	18	10	10	28	100	FC-100AF/100AT
3	PNL A1C	37	13	13	37	100	FC-100AF/100AT
4	PNL A1D	49	18	18	50	100	FC-100AF/100AT
5	PNL A1F	40	14	15	41	100	FC-100AF/100AT
6	PNL A1G	44	15	15	43	100	FC-100AF/100AT
7	PNL A2M	204	73	73	202	400	LH-400AF/400AT
8	PNL A3M	204	73	73	202	400	LH-400AF/400AT
9	PNL A4M	212	76	76	211	400	LH-400AF/400AT
10	EPS-A	6	5	6	16	60	FC-100AF/60AT
11	ELEV 1A	43	11	11	30	200	KC-250AF/200AT
12	ELEV-2A	43	11	11	30	200	KC-250AF/200AT
13	ACCU-2.1	58	26	26	72	175	KC-250AF/175AT
14	AHU-2 SUPPLY	22	10	10	28	100	FC-100AF/100AT
15	AHU-2 RET.	17	8	8	22	90	FC-100AF/90AT
16	SPARE SPACE	0	0	0	0	250	
17	CUH -2.10	13	6	6	16	60	FC-100AF/60AT
18	ACCU-2.2	13	6	6	17	60	FC-100AF/60AT
19	SPARE SPACE	0	0	0	0	250	
20	SPARE BREAKER #1	0	0	0	0	100	FC-100AF/100AT
21	SPARE SPACE	0	0	0	0	250	
22	SPARE SPACE	0	0	0	0	250	
23	SPARE SPACE	0	0	0	0	250	
24	SPARE SPACE	0	0	0	0	250	
25	SPARE SPACE	0	0	0	0	250	
26	SPARE SPACE	0	0	0	0	250	

ALL CONNECTED	KVA	AMPS	BUS TOTALS	KVA	
TOTAL CONNECTED	1050.6	2916.3	CONNECTED	1050.6	DATE: Feb 12, 2002
TOTAL DEMAND	389.4	1080.8	DEMAND	389.4	TIME: 08:57:56
TOTAL DESIGN	392.1	1088.4	DESIGN	392.1	

SWBD HAS A MAIN BREAKER, NOT MLO.
BREAKERS IN THIS SWBD ARE SERIES RATED REQUIRED TO LIMIT FAULT CURRENT, NO SUBSTITUTES ALLOWED
ELEV-1A AND ELEV-2A SHALL BE SHUNT TRIP BREAKERS.

1PNL_A1A_SCH

PANEL: PNL A1A SCH — OC DEVICE TYPE: Breaker — ENCLOSURE: NEMA 1 — MAINS(A): MLO — BUS RATING(A): 225
LOCATION: — DEVICE FAMILY: Bolt On — MOUNTING: Surface — WIRING: 4 Wire — WITHSTAND(A): 10000
FED FROM: PNL AIA — VOLTAGE: 208 / 120 — FAULT CURRENT(A): 12753

OC AMPS P	NOTES	DESCRIPTION	DEMAND CODE	VA	CKT	PHASE LOADS VA A	B	C	CKT	VA	DEMAND CODE	DESCRIPTION	NOTES	OC AMPS P
20 1		BASEMENT LTG&RCP	LIGHTIN	800	1	1641			2	841	PLUMBIN	DH-1		20 1
20 1		BASEMENT LTG&RCP	LIGHTIN	800	3		1400		4	600	H.V.A.C	EF-2.6, UH-2.2-2.4		20 1
20 1		BASEMENT LTG&RCP	LIGHTIN	800	5			1665	6	865	H.V.A.C	FCU-2.1		15 1
20 1		TIME CLOCK	LIGHTIN	180	7	1599			8	1441	H.V.A.C	EF-2.5		20 2
35 2		ACCU-2.3	H.V.A.C	2165	9		3144		10	1441		""		""
""		""		2165	11			2165	12	0		SPACE		0 1
35 2		ACCU-2.4	H.V.A.C	2165	13	3261			14	1201	PLUMBIN	SP-2		20 1
""		""		2165	15		3261		16	1201	PLUMBIN	SP-4		20 1
35 2		ACCU-2.5	H.V.A.C	2165	17			2165	18	0		SPACE		0 1
""		""		2165	19	2165			20	0		SPACE		0 1
35 2		ACCU-2.6	H.V.A.C	2165	21		2454		22	289	BUILDIN	ELEV 1-CP		20 2
""		""		2165	23			2454	24	289		""		""
0 1		SPACE		0	25	289			26	289	BUILDIN	ELEV 2-CP		20 2
0 1		SPACE		0	27		289		28	289		""		""
0 1		SPACE		0	29			0	30	0	SPARE	SPARE		20 1
0 1		SPACE		0	31	0			32	0		SPACE		0 1
20 1		EXTERIOR LTG	LIGHTIN	1200	33		1200		34	0		SPACE		0 1
0 1		SPACE		0	35			0	36	0	SPARE	SPARE		20 1
0 1		SPACE		0	37	0			38	0	SPARE	SPARE		20 1
0 1		SPACE		0	39		0		40	0	SPARE	SPARE		20 1
0 1		SPACE		0	41			0	42	0	SPARE	SPARE		20 1

ALL CONNECTED	KVA	AMPS	* PHASE TOTALS	VA	AMPS	BUS TOTALS	KVA	
TOTAL CONNECTED	27.0	74.9	* PHASE A	8314.6	69.2	CONNECTED	27.0	DATE: Feb 12, 2002
TOTAL DEMAND	15.2	42.1	* PHASE B	11180.2	93.1	DEMAND	15.2	TIME: 08:57:56
TOTAL DESIGN	16.1	44.7	* PHASE C	7638.8	63.6	DESIGN	16.1	

1PNL-A1B_SCH

PANEL: PNL-A1B SCH — OC DEVICE TYPE: Breaker — ENCLOSURE: NEMA 1 — MAINS(A): MLO — BUS RATING(A): 225
LOCATION: — DEVICE FAMILY: Bolt On — MOUNTING: Flush — WIRING: 4 Wire — WITHSTAND(A): 10000
FED FROM: PNL A1B — VOLTAGE: 208 / 120 — FAULT CURRENT(A): 12753
This panel shall be 14 inches wide

OC AMPS P	NOTES	DESCRIPTION	DEMAND CODE	VA	CKT	PHASE LOADS VA A	B	C	CKT	VA	DEMAND CODE	DESCRIPTION	NOTES	OC AMPS P
0 1		SPACE		0	1	0			2	0		SPACE		0 1
0 1		SPACE		0	3		0		4	0		SPACE		0 1
0 1		SPACE		0	5			0	6	0		SPACE		0 1
0 1		SPACE		0	7	0			8	0		SPACE		0 1
0 1		SPACE		0	9		0		10	0		SPACE		0 1
0 1		SPACE		0	11			0	12	0		SPACE		0 1
0 1		SPACE		0	13	0			14	0		SPACE		0 1
0 1		SPACE		0	15		0		16	0		SPACE		0 1
0 1		SPACE		0	17			1350	18	1350	PLUMBIN	SP-2, HRP-3, HRP-4		20 1
20 1		RCP 1115, 1100	RECEPTA	600	19	3240			20	2640	PLUMBIN	WH-2		30 1
20 1		RCP 1109	RECEPTA	600	21		600		22	0		SPACE		0 1
20 1		RM. 1109-1111 LTG.	LIGHTIN	450	23			450	24	0		SPACE		0 1
25 2		EF-2.2	H.V.A.C	1441	25	1441			26	0		SPACE		0 1
""		""		1441	27		1441		28	0		SPACE		0 1
20 1		UH-2.1	H.V.A.C	480	29			480	30	0	SPARE	SPARE		20 1
20 1		RM1112,13,18,19,21 L	LIGHTIN	1100	31	3874			32	2882	H.V.A.C	AHU-2.2		50 2
20 1		RM1112,14,17,18,19	RECEPTA	900	33		3689		34	2882		""		""
20 1		ROOM 1116 RECP.	RECEPTA	1200	35			1200	36	0	SPARE	SPARE		20 1
20 1		ROOM 1121 RECP.	RECEPTA	360	37	360			38	0	SPARE	SPARE		20 1
20 1		ROOM 1121 RECP.	RECEPTA	540	39		540		40	0	SPARE	SPARE		20 1
20 1		ROOM 1121 RECP.	RECEPTA	720	41			720	42	0	SPARE	SPARE		20 1

ALL CONNECTED	KVA	AMPS	* PHASE TOTALS	VA	AMPS	BUS TOTALS	KVA	
TOTAL CONNECTED	18.4	51.2	* PHASE A	8716.3	72.6	CONNECTED	18.4	DATE: Feb 12, 2002
TOTAL DEMAND	9.6	26.5	* PHASE B	6174.7	51.4	DEMAND	9.6	TIME: 08:57:56
TOTAL DESIGN	9.9	27.6	* PHASE C	4200.4	35.0	DESIGN	9.9	

This panel shall be 14 inches wide

1PNL-A1C_SCH

PANEL: PNL-A1C SCH — OC DEVICE TYPE: Breaker — ENCLOSURE: NEMA 1 — MAINS(A): MLO — BUS RATING(A): 225
LOCATION: — DEVICE FAMILY: Bolt On — MOUNTING: Flush — WIRING: 4 Wire — WITHSTAND(A): 10000
FED FROM: PNL A1C — VOLTAGE: 208 / 120 — FAULT CURRENT(A): 4446

OC AMPS P	NOTES	DESCRIPTION	DEMAND CODE	VA	CKT	PHASE LOADS VA A	B	C	CKT	VA	DEMAND CODE	DESCRIPTION	NOTES	OC AMPS P
20 1		ROOM 1120 RECP.	RECEPTA	600	1	2415			2	1876	H.V.A.C	RM 1120 PTAC		20 2
20 1		ROOM 1120 RECP.	RECEPTA	961	3		2751		4	1876		""		""
20 1		ROOM 1120 LTG/RECP.	RECEPTA	1201	5			2978	6	1876	H.V.A.C	RM 1122 PTAC		20 2
20 1		ROOM 1122 RECP.	RECEPTA	600	7	2415			8	1876		""		""
20 1		ROOM 1122 RECP.	RECEPTA	961	9		2751		10	1876	H.V.A.C	RM 1123 PTAC		20 2
20 1		ROOM 1122 LTG/RECP.	RECEPTA	1201	11			2978	12	1876		""		""
20 1		ROOM 1123 RECP.	RECEPTA	600	13	2415			14	1876	H.V.A.C	RM 1124 PTAC		20 2
20 1		ROOM 1123 RECP.	RECEPTA	1321	15		3092		16	1876		""		""
20 1		ROOM 1123 LTG/RECP.	RECEPTA	1201	17			2555	18	1443	H.V.A.C	RM 1125 PTAC		15 2
20 1		ROOM 1124 RECP.	RECEPTA	600	19	1986			20	1443		""		""
20 1		ROOM 1124 RECP.	RECEPTA	961	21		2751		22	1876	H.V.A.C	RM 1126 PTAC		20 2
20 1		ROOM 1124 LTG/RECP.	RECEPTA	1201	23			2978	24	1876		""		""
20 1		ROOM 1125 RECP.	RECEPTA	600	25	600			26	0	SPARE	SPARE		20 1
20 1		ROOM 1125 RECP.	RECEPTA	961	27		961		28	0	SPARE	SPARE		20 1
20 1		ROOM 1125 LTG/RECP.	RECEPTA	1201	29			1201	30	0	SPARE	SPARE		20 1
20 1		ROOM 1126 RECP.	RECEPTA	600	31	600			32	0	SPARE	SPACE		0 1
20 1		ROOM 1126 RECP.	RECEPTA	1321	33		1321		34	0	SPARE	SPACE		0 1
20 1		ROOM 1126 LTG/RECP.	RECEPTA	1201	35			1201	36	0	SPARE	SPACE		0 1
20 1		RM. 1127,29,31 LTG.	LIGHTIN	375	37	375			38	0	SPARE	SPACE		0 1
20 1		RM. 1127,29,31 RECP.	RECEPTA	540	39		540		40	0	SPARE	SPACE		0 1
0 1		SPACE	SPARE	0	41			0	42	0	SPARE	SPACE		0 1

ALL CONNECTED	KVA	AMPS	* PHASE TOTALS	VA	AMPS	BUS TOTALS	KVA	
TOTAL CONNECTED	37.0	102.6	* PHASE A	10102.3	84.1	CONNECTED	37.0	DATE: Feb 12, 2002
TOTAL DEMAND	13.3	36.8	* PHASE B	13526.0	112.6	DEMAND	13.3	TIME: 08:57:56
TOTAL DESIGN	13.4	37.1	* PHASE C	13332.8	111.0	DESIGN	13.4	

1PNL-A1G_SCH

PANEL: PNL-A1G SCH — OC DEVICE TYPE: Breaker — ENCLOSURE: NEMA 1 — MAINS(A): MLO — BUS RATING(A): 225
LOCATION: — DEVICE FAMILY: Bolt On — MOUNTING: Flush — WIRING: 4 Wire — WITHSTAND(A): 10000
FED FROM: PNL A1G — VOLTAGE: 208 / 120 — FAULT CURRENT(A): 3203

OC AMPS P	NOTES	DESCRIPTION	DEMAND CODE	VA	CKT	PHASE LOADS VA A	B	C	CKT	VA	DEMAND CODE	DESCRIPTION	NOTES	OC AMPS P
20 1		ROOM 1140 RECP.	RECEPTA	600	1	1986			2	1443	H.V.A.C	RM 1140 PTAC		15 2
20 1		ROOM 1140 RECP.	RECEPTA	961	3		2326		4	1443		""		""
20 1		ROOM 1140 LTG/RECP.	RECEPTA	1201	5			2555	6	1443	H.V.A.C	RM 1142 PTAC		15 2
20 1		ROOM 1142 RECP.	RECEPTA	600	7	1986			8	1443		""		""
20 1		ROOM 1142 RECP.	RECEPTA	1321	9		2392		10	1155	H.V.A.C	RM 1144 PTAC		15 2
20 1		ROOM 1142 LTG/RECP.	RECEPTA	1201	11			2275	12	1155		""		""
20 1		ROOM 1144 RECP.	RECEPTA	600	13	1986			14	1443	H.V.A.C	RM 1146 PTAC		15 2
20 1		ROOM 1144 RECP.	RECEPTA	961	15		2326		16	1443		""		""
20 1		ROOM 1144 LTG/RECP.	RECEPTA	1201	17			3190	18	2093	H.V.A.C	RM 1147 PTAC		20 2
20 1		ROOM 1146 RECP.	RECEPTA	600	19	2630			20	2093		""		""
20 1		ROOM 1146 RECP.	RECEPTA	1321	21		2670		22	1443	H.V.A.C	RM 1148 PTAC		15 2
20 1		ROOM 1146 LTG/RECP.	RECEPTA	1201	23			2555	24	1443		""		""
20 1		ROOM 1147 RECP.	RECEPTA	600	25	2415			26	1876	H.V.A.C	RM 1145 PTAC		20 2
20 1		ROOM 1147 RECP.	RECEPTA	1321	27		3092		28	1876		""		""
20 1		ROOM 1147 LTG/RECP.	RECEPTA	1201	29			3261	30	2165	H.V.A.C	CUH 2.6		30 2
20 1		ROOM 1148 RECP.	RECEPTA	600	31	2701			32	2165		""		""
20 1		ROOM 1148 RECP.	RECEPTA	1321	33		1321		34	0	SPARE	SPARE		20 1
20 1		ROOM 1148 LTG/RECP.	RECEPTA	1201	35			1201	36	0	SPARE	SPARE		20 1
20 1		ROOM 1145 RECP.	RECEPTA	600	37	600			38	0		SPACE		0 1
20 1		ROOM 1145 RECP.	RECEPTA	1321	39		1321		40	0		SPACE		0 1
20 1		ROOM 1145 LTG/RECP.	RECEPTA	1201	41			1201	42	0		SPACE		0 1

ALL CONNECTED	KVA	AMPS	* PHASE TOTALS	VA	AMPS	BUS TOTALS	KVA	
TOTAL CONNECTED	43.8	121.5	* PHASE A	13270.8	110.5	CONNECTED	43.8	DATE: Feb 12, 2002
TOTAL DEMAND	15.5	42.9	* PHASE B	14941.3	124.4	DEMAND	15.5	TIME: 08:57:56
TOTAL DESIGN	15.5	42.9	* PHASE C	15671.5	130.5	DESIGN	15.5	

1PNL-A1D_SCH

PANEL: PNL-A1D SCH — OC DEVICE TYPE: Breaker — ENCLOSURE: NEMA 1 — MAINS(A): MLO — BUS RATING(A): 225
LOCATION: — DEVICE FAMILY: Bolt On — MOUNTING: Flush — WIRING: 4 Wire — WITHSTAND(A): 10000
FED FROM: PNL A1D — VOLTAGE: 208 / 120 — FAULT CURRENT(A): 4446

OC AMPS P	NOTES	DESCRIPTION	DEMAND CODE	VA	CKT	PHASE LOADS VA A	B	C	CKT	VA	DEMAND CODE	DESCRIPTION	NOTES	OC AMPS P
20 1		ROOM 1133 RECP.	RECEPTA	600	1	1986			2	1443	H.V.A.C	RM 1133 PTAC		15 2
20 1		ROOM 1133 RECP.	RECEPTA	961	3		2326		4	1443		""		""
20 1		ROOM 1133 LTG/RECP.	RECEPTA	1201	5			2555	6	1443	H.V.A.C	RM 1135 PTAC		15 2
20 1		ROOM 1135 RECP.	RECEPTA	600	7	1986			8	1443		""		""
20 1		ROOM 1135 RECP.	RECEPTA	961	9		2326		10	1443	H.V.A.C	RM 1137 PTAC		15 2
20 1		ROOM 1135 LTG/RECP.	RECEPTA	1201	11			2555	12	1443		""		""
20 1		ROOM 1137 RECP.	RECEPTA	600	13	1986			14	1443	H.V.A.C	RM 1139 PTAC		15 2
20 1		ROOM 1137 RECP.	RECEPTA	1321	15		2670		16	1443		""		""
20 1		ROOM 1137 LTG/RECP.	RECEPTA	1201	17			2555	18	1443	H.V.A.C	RM 1141 PTAC		15 2
20 1		ROOM 1139 RECP.	RECEPTA	600	19	1986			20	1443		""		""
20 1		ROOM 1139 RECP.	RECEPTA	961	21		2326		22	1443	H.V.A.C	RM 1143 PTAC		15 2
20 1		ROOM 1139 LTG/RECP.	RECEPTA	1201	23			2555	24	1443		""		""
20 1		ROOM 1141 RECP.	RECEPTA	600	25	2415			26	1876	H.V.A.C	RM 1145 PTAC		20 2
20 1		ROOM 1141 RECP.	RECEPTA	961	27		2751		28	1876		""		""
20 1		ROOM 1141 LTG/RECP.	RECEPTA	1201	29			1201	30	0	SPARE	SPARE		20 1
20 1		ROOM 1143 RECP.	RECEPTA	600	31	2698			32	2162	H.V.A.C	DRYER RCP		30 2
20 1		ROOM 1143 RECP.	RECEPTA	961	33		3032		34	2162		""		""
20 1		ROOM 1143 LTG/RECP.	RECEPTA	1201	35			3258	36	2162	H.V.A.C	DRYER RCP		30 2
20 1		WASHER RCP 1129	BUILDIN	721	37	2809			38	2162		""		""
20 1		WASHER RCP 1129	BUILDIN	721	39		2809		40	2162	H.V.A.C	DRYER RCP		30 2
20 1		WASHER RCP 1129	BUILDIN	721	41			2809	42	2162		""		""

ALL CONNECTED	KVA	AMPS	* PHASE TOTALS	VA	AMPS	BUS TOTALS	KVA	
TOTAL CONNECTED	48.6	134.8	* PHASE A	14719.5	122.6	CONNECTED	48.6	DATE: Feb 12, 2002
TOTAL DEMAND	18.0	50.1	* PHASE B	17241.1	143.6	DEMAND	18.0	TIME: 08:57:56
TOTAL DESIGN	18.0	50.1	* PHASE C	16670.5	138.8	DESIGN	18.0	

1PNL-A1F_SCH

PANEL: PNL-A1F SCH — OC DEVICE TYPE: Breaker — ENCLOSURE: NEMA 1 — MAINS(A): MLO — BUS RATING(A): 225
LOCATION: — DEVICE FAMILY: Bolt On — MOUNTING: Flush — WIRING: 4 Wire — WITHSTAND(A): 10000
FED FROM: PNL A1F — VOLTAGE: 208 / 120 — FAULT CURRENT(A): 3203

OC AMPS P	NOTES	DESCRIPTION	DEMAND CODE	VA	CKT	PHASE LOADS VA A	B	C	CKT	VA	DEMAND CODE	DESCRIPTION	NOTES	OC AMPS P
20 1		SPARE	SPARE	0	1	1876			2	1876	H.V.A.C	RM 1128 PTAC		20 2
20 1		ROOM 1128 RECP.	RECEPTA	1321	3		3092		4	1876		""		""
20 1		ROOM 1128 LTG/RECP.	RECEPTA	1201	5			2555	6	1443	H.V.A.C	RM 1130 PTAC		15 2
20 1		ROOM 1130 RECP.	RECEPTA	600	7	1986			8	1443		""		""
20 1		ROOM 1130 RECP.	RECEPTA	961	9		2326		10	1443	H.V.A.C	RM 1132 PTAC		15 2
20 1		ROOM 1130 LTG/RECP.	RECEPTA	1201	11			2555	12	1443		""		""
20 1		ROOM 1132 RECP.	RECEPTA	600	13	1986			14	1443	H.V.A.C	RM 1134 PTAC		15 2
20 1		ROOM 1132 RECP.	RECEPTA	961	15		2326		16	1443		""		""
20 1		ROOM 1132 LTG/RECP.	RECEPTA	1201	17			2555	18	1443	H.V.A.C	RM 1136 PTAC		15 2
20 1		ROOM 1134 RECP.	RECEPTA	600	19	1986			20	1443		""		""
20 1		ROOM 1134 RECP.	RECEPTA	1321	21		2670		22	1443	H.V.A.C	RM 1138 PTAC		15 2
20 1		ROOM 1134 LTG/RECP.	RECEPTA	1201	23			2555	24	1443		""		""
20 1		ROOM 1136 RECP.	RECEPTA	600	25	2415			26	1876	H.V.A.C	RM 1128 PTAC		20 2
20 1		ROOM 1136 RECP.	RECEPTA	961	27		2751		28	1876		""		""
20 1		ROOM 1136 LTG/RECP.	RECEPTA	1201	29			1801	30	600	RECEPTA	ROOM 1128 RECP.		20 1
20 1		ROOM 1138 RECP.	RECEPTA	600	31	1921			32	1321	RECEPTA	ROOM 1128 RECP.		20 1
20 1		ROOM 1138 RECP.	RECEPTA	961	33		2162		34	1201	RECEPTA	ROOM 1128 LTG/RECP.		20 1
20 1		ROOM 1138 LTG/RECP.	RECEPTA	1201	35			1201	36	0		SPACE		0 1
20 1		CORRIDORS LTG	LIGHTIN	950	37	950			38	0		SPACE		0 1
20 1		SPARE	SPARE	0	39		0		40	0		SPACE		0 1
20 1		SPARE	SPARE	0	41			0	42	0		SPACE		0 1

ALL CONNECTED	KVA	AMPS	* PHASE TOTALS	VA	AMPS	BUS TOTALS	KVA	
TOTAL CONNECTED	39.8	110.4	* PHASE A	12325.2	102.6	CONNECTED	39.8	DATE: Feb 12, 2002
TOTAL DEMAND	14.5	40.1	* PHASE B	14732.3	122.7	DEMAND	14.5	TIME: 08:57:56
TOTAL DESIGN	14.7	40.8	* PHASE C	12806.0	106.6	DESIGN	14.7	

I hereby certify this drawing was prepared by me or under my direct supervision and that I am a duly registered architect under the laws of the State of Minnesota.

For: MEAD & HUNT, INC.

By:
Title: PROJECT MANAGER
Registration No: 22452

ALL SCALES SHOWN ARE BASED ON A STANDARD DRAWING SIZE OF 28" X 40" OR METRIC DRAWING SIZE OF 841mm X 594mm. IF ANY OTHER SIZE DRAWINGS ARE FURNISHED OR PLOTTED THE CONTRACTOR SHALL ADJUST THE SCALES ACCORDINGLY. THE CONTRACTOR SHALL ALSO ADVISE HIS SUB-CONTRACTORS OF THE ABOVE.

Revisions

Symbol	Descriptions	Date	Approved

Architect: ARCHITECTURAL ALLIANCE, MINNEAPOLIS, MINNESOTA
Engineer: MEAD & HUNT, MADISON, WISCONSIN
U.S. ARMY ENGINEER DISTRICT, CORPS OF ENGINEERS, OMAHA, NEBRASKA

Designed by: JAJ
Drawn by: LCP
Checked by: JAJ
Reviewed by: REC
Submitted by:

MINNEAPOLIS–ST.PAUL AFR — MINNESOTA

CONSOLIDATED LODGING FACILITY
– PHASE THREE –

ELECTRICAL SCHEDULES

Plot Scale Ratio: 1: 1
Design File: 8785E73.DWG
Date: 2–14–2002
Spec. No.: DACA 45–02–B–0008
Contract No.: DACA
Drawing Code: AF 721–315–03
Sheet reference number: E7.3

QJKL-990011P3

1PNL-A2B_SCH

PANEL: PNL-A2B SCH — OC DEVICE TYPE: Breaker — ENCLOSURE: NEMA 1 — MAINS(A): MLO — BUS RATING(A): 225
LOCATION: — DEVICE FAMILY: Bolt On — MOUNTING: Flush — WIRING: 4 Wire — WITHSTAND(A): 10000
FED FROM: PNL A2B — VOLTAGE: 208 / 120 — FAULT CURRENT(A): 7530
This panel shall be 14 inches wide

OC AMPS P	NOTES	DESCRIPTION	DEMAND CODE	VA	CKT	PHASE LOADS VA A	B	C	CKT	VA	DEMAND CODE	DESCRIPTION	NOTES	OC AMPS P
15 1		FCU-2.2	H.V.A.C	841	1	841			2	0		SPACE		0 1
0 1		SPACE		0	3		0		4	0		SPACE		0 1
0 1		SPACE		0	5			0	6	0		SPACE		0 1
0 1		SPACE		0	7	0			8	0		SPACE		0 1
0 1		SPACE		0	9		0		10	0		SPACE		0 1
0 1		SPACE		0	11			0	12	0		SPACE		0 1
0 1		SPACE		0	13	1443			14	1443	H.V.A.C	RM 2113 PTAC		15 2
0 1		SPACE		0	15		1443		16	1443		""		""
0 1		SPACE		0	17			1443	18	1443	H.V.A.C	RM 2111 PTAC		15 2
20 1		ROOM 2113 RECP.	RECEPTA	600	19	1986			20	1443		""		""
20 1		ROOM 2113 RECP.	RECEPTA	961	21		2326		22	1443	H.V.A.C	RM 2119 PTAC		15 2
20 1		ROOM 2113 LTG/RECP.	RECEPTA	1201	23			2555	24	1443		""		""
20 1		ROOM 2111 RECP.	RECEPTA	600	25	1986			26	1443	RECEPTA	RM 2121 PTAC		15 2
20 1		ROOM 2111 RECP.	RECEPTA	1321	27		2670		28	1443		""		""
20 1		ROOM 2111 LTG/RECP.	RECEPTA	1201	29			1891	30	690	RECEPTA	ROOM 2112,14 LTG/REC		20 1
20 1		ROOM 2119 RECP.	RECEPTA	600	31	1800			32	1200	RECEPTA	ROOM 2116 RECP.		20 1
20 1		ROOM 2119 RECP.	RECEPTA	1321	33		1321		34	0		SPACE		0 1
20 1		ROOM 2119 LTG/RECP.	RECEPTA	1201	35			1201	36	0		SPACE		0 1
20 1		ROOM 2121 RECP.	RECEPTA	600	37	600			38	0	SPARE	SPARE		20 1
20 1		ROOM 2121 RECP.	RECEPTA	961	39		961		40	0	SPARE	SPARE		20 1
20 1		ROOM 2121 LTG/RECP.	RECEPTA	1201	41			1201	42	0	SPARE	SPARE		20 1

ALL CONNECTED	KVA	AMPS	* PHASE TOTALS	VA	AMPS	BUS TOTALS	KVA	
TOTAL CONNECTED	24.5	68.0	* PHASE A	8222.4	68.5	CONNECTED	24.5	DATE: Feb 12, 2002
TOTAL DEMAND	7.8	21.6	* PHASE B	8345.3	69.5	DEMAND	7.8	TIME: 08:57:56
TOTAL DESIGN	7.8	21.6	* PHASE C	7994.0	66.6	DESIGN	7.8	

This panel shall be 14 inches wide

1PNL-A2C_SCH

PANEL: PNL-A2C SCH — OC DEVICE TYPE: Breaker — ENCLOSURE: NEMA 1 — MAINS(A): MLO — BUS RATING(A): 225
LOCATION: — DEVICE FAMILY: Bolt On — MOUNTING: Flush — WIRING: 4 Wire — WITHSTAND(A): 10000
FED FROM: PNL A2C — VOLTAGE: 208 / 120 — FAULT CURRENT(A): 4594

OC AMPS P	NOTES	DESCRIPTION	DEMAND CODE	VA	CKT	PHASE LOADS VA A	B	C	CKT	VA	DEMAND CODE	DESCRIPTION	NOTES	OC AMPS P
20 1		ROOM 2120 RECP.	RECEPTA	600	1	1986			2	1443	H.V.A.C	RM 2120 PTAC		15 2
20 1		ROOM 2120 RECP.	RECEPTA	961	3		2326		4	1443		""		""
20 1		ROOM 2120 LTG/RECP.	RECEPTA	1201	5			2555	6	1443	H.V.A.C	RM 2122 PTAC		15 2
20 1		ROOM 2122 RECP.	RECEPTA	600	7	1986			8	1443		""		""
20 1		ROOM 2122 RECP.	RECEPTA	961	9		2326		10	1443	H.V.A.C	RM 2123 PTAC		15 2
20 1		ROOM 2122 LTG/RECP.	RECEPTA	1201	11			2555	12	1443		""		""
20 1		ROOM 2123 RECP.	RECEPTA	600	13	1986			14	1443	H.V.A.C	RM 2124 PTAC		15 2
20 1		ROOM 2123 RECP.	RECEPTA	961	15		2326		16	1443		""		""
20 1		ROOM 2123 LTG/RECP.	RECEPTA	1201	17			2555	18	1443	H.V.A.C	RM 2125 PTAC		15 2
20 1		ROOM 2124 RECP.	RECEPTA	600	19	1986			20	1443		""		""
20 1		ROOM 2124 RECP.	RECEPTA	961	21		2326		22	1443	H.V.A.C	RM 2126 PTAC		15 2
20 1		ROOM 2124 LTG/RECP.	RECEPTA	1201	23			2555	24	1443		""		""
20 1		ROOM 2125 RECP.	RECEPTA	600	25	1515			26	915	RECEPTA	RM. 2117,29,31 LTG/R		20 1
20 1		ROOM 2125 RECP.	RECEPTA	1321	27		1321		28	0	SPARE	SPARE		20 1
20 1		ROOM 2125 LTG/RECP.	RECEPTA	1201	29			1201	30	0	SPARE	SPARE		20 1
20 1		ROOM 2126 RECP.	RECEPTA	600	31	600			32	0		SPACE		0 1
20 1		ROOM 2126 RECP.	RECEPTA	961	33		961		34	0		SPACE		0 1
20 1		ROOM 2126 LTG/RECP.	RECEPTA	1201	35			1201	36	0		SPACE		0 1
0 1		SPACE		0	37	0			38	0		SPACE		0 1
0 1		SPACE		0	39		0		40	0		SPACE		0 1
0 1		SPACE		0	41			0	42	0		SPACE		0 1

ALL CONNECTED	KVA	AMPS	* PHASE TOTALS	VA	AMPS	BUS TOTALS	KVA	
TOTAL CONNECTED	32.8	91.2	* PHASE A	9515.0	79.2	CONNECTED	32.8	DATE: Feb 12, 2002
TOTAL DEMAND	11.2	31.1	* PHASE B	11126.0	92.6	DEMAND	11.2	TIME: 08:57:56
TOTAL DESIGN	11.2	31.1	* PHASE C	12206.0	101.6	DESIGN	11.2	

1PNL-A2D_SCH

PANEL: PNL-A2D SCH — OC DEVICE TYPE: Breaker — ENCLOSURE: NEMA 1 — MAINS(A): MLO — BUS RATING(A): 225
LOCATION: — DEVICE FAMILY: Bolt On — MOUNTING: Surface — WIRING: 4 Wire — WITHSTAND(A): 10000
FED FROM: PNL A2D — VOLTAGE: 208 / 120 — FAULT CURRENT(A): 7530

OC AMPS P	NOTES	DESCRIPTION	DEMAND CODE	VA	CKT	PHASE LOADS VA A	B	C	CKT	VA	DEMAND CODE	DESCRIPTION	NOTES	OC AMPS P
20 1		ROOM 2133 RECP.	RECEPTA	600	1	1986			2	1443	H.V.A.C	RM 2133 PTAC		15 2
20 1		ROOM 2133 RECP.	RECEPTA	1321	3		2670		4	1443		""		""
20 1		ROOM 2133 LTG/RECP.	RECEPTA	1201	5			2555	6	1443	H.V.A.C	RM 2135 PTAC		15 2
20 1		ROOM 2135 RECP.	RECEPTA	600	7	1986			8	1443		""		""
20 1		ROOM 2135 RECP.	RECEPTA	961	9		2326		10	1443	H.V.A.C	RM 2137 PTAC		15 2
20 1		ROOM 2135 LTG/RECP.	RECEPTA	1201	11			2555	12	1443		""		""
20 1		ROOM 2137 RECP.	RECEPTA	600	13	1986			14	1443	H.V.A.C	RM 2139 PTAC		15 2
20 1		ROOM 2137 RECP.	RECEPTA	1321	15		2670		16	1443		""		""
20 1		ROOM 2137 LTG/RECP.	RECEPTA	1201	17			2555	18	1443	H.V.A.C	RM 2141 PTAC		15 2
20 1		ROOM 2139 RECP.	RECEPTA	600	19	1986			20	1443		""		""
20 1		ROOM 2139 RECP.	RECEPTA	961	21		2326		22	1443	H.V.A.C	RM 2143 PTAC		15 2
20 1		ROOM 2139 LTG/RECP.	RECEPTA	1201	23			2555	24	1443		""		""
20 1		ROOM 2141 RECP.	RECEPTA	600	25	2415			26	1876	H.V.A.C	RM 2145 PTAC		20 2
20 1		ROOM 2141 RECP.	RECEPTA	961	27		2751		28	1876		""		""
20 1		ROOM 2141 LTG/RECP.	RECEPTA	1201	29			1201	30	0	SPARE	SPARE		20 1
20 1		ROOM 2143 RECP.	RECEPTA	600	31	600			32	0	SPARE	SPARE		20 1
20 1		ROOM 2143 RECP.	RECEPTA	961	33		961		34	0	SPARE	SPARE		20 1
20 1		ROOM 2143 LTG/RECP.	RECEPTA	1201	35			1201	36	0	SPARE	SPARE		20 1
20 1		ROOM 2145 RECP.	RECEPTA	600	37	1321			38	721	BUILDIN	WASHER RCP 2129		20 1
20 1		ROOM 2145 RECP.	RECEPTA	961	39		1682		40	721	BUILDIN	WASHER RCP 2129		20 1
20 1		ROOM 2145 LTG/RECP.	RECEPTA	1201	41			1922	42	721	BUILDIN	WASHER RCP 2129		20 1

ALL CONNECTED	KVA	AMPS	* PHASE TOTALS	VA	AMPS	BUS TOTALS	KVA	
TOTAL CONNECTED	40.5	112.3	* PHASE A	11583.6	96.5	CONNECTED	40.5	DATE: Feb 12, 2002
TOTAL DEMAND	13.8	38.2	* PHASE B	14822.3	123.4	DEMAND	13.8	TIME: 08:57:56
TOTAL DESIGN	13.8	38.2	* PHASE C	14127.5	117.6	DESIGN	13.8	

1PNL-A2F_SCH

PANEL: PNL-A2F SCH — OC DEVICE TYPE: Breaker — ENCLOSURE: NEMA 1 — MAINS(A): MLO — BUS RATING(A): 225
LOCATION: — DEVICE FAMILY: Bolt On — MOUNTING: Flush — WIRING: 4 Wire — WITHSTAND(A): 10000
FED FROM: PNL A2F — VOLTAGE: 208 / 120 — FAULT CURRENT(A): 3487

OC AMPS P	NOTES	DESCRIPTION	DEMAND CODE	VA	CKT	PHASE LOADS VA A	B	C	CKT	VA	DEMAND CODE	DESCRIPTION	NOTES	OC AMPS P
20 1		SPARE	SPARE	0	1	1876			2	1876	H.V.A.C	RM 2128 PTAC		20 2
20 1		ROOM 2128 RECP.	RECEPTA	1321	3		3092		4	1876		""		""
20 1		ROOM 2128 LTG/RECP.	RECEPTA	1201	5			2978	6	1876	H.V.A.C	RM 2130 PTAC		20 2
20 1		ROOM 2130 RECP.	RECEPTA	600	7	2415			8	1876		""		""
20 1		ROOM 2130 RECP.	RECEPTA	961	9		2751		10	1876	H.V.A.C	RM 2132 PTAC		20 2
20 1		ROOM 2130 LTG/RECP.	RECEPTA	1201	11			2978	12	1876		""		""
20 1		ROOM 2132 RECP.	RECEPTA	600	13	2415			14	1876	H.V.A.C	RM 2134 PTAC		20 2
20 1		ROOM 2132 RECP.	RECEPTA	961	15		2751		16	1876		""		""
20 1		ROOM 2132 LTG/RECP.	RECEPTA	1201	17			2978	18	1876	H.V.A.C	RM 2136 PTAC		20 2
20 1		ROOM 2134 RECP.	RECEPTA	600	19	2415			20	1876		""		""
20 1		ROOM 2134 RECP.	RECEPTA	1321	21		3092		22	1876	H.V.A.C	RM 2138 PTAC		20 2
20 1		ROOM 2134 LTG/RECP.	RECEPTA	1201	23			2978	24	1876		""		""
20 1		ROOM 2136 RECP.	RECEPTA	600	25	2415			26	1876	H.V.A.C	RM 2128 PTAC		20 2
20 1		ROOM 2136 RECP.	RECEPTA	961	27		2751		28	1876		""		""
20 1		ROOM 2136 LTG/RECP.	RECEPTA	1201	29			1801	30	600	RECEPTA	ROOM 2128 RECP.		20 1
20 1		ROOM 2138 RECP.	RECEPTA	600	31	1921			32	1321	RECEPTA	ROOM 2128 RECP.		20 1
20 1		ROOM 2138 RECP.	RECEPTA	961	33		2282		34	1321	RECEPTA	ROOM 2128 RECP.		20 1
20 1		ROOM 2138 LTG/RECP.	RECEPTA	1201	35			1201	36	0		SPACE		0 1
20 1		CORRIDOR LTG.	RECEPTA	900	37	900			38	0		SPACE		0 1
20 1		SPARE	SPARE	0	39		0		40	0		SPACE		0 1
20 1		SPARE	SPARE	0	41			0	42	0		SPACE		0 1

ALL CONNECTED	KVA	AMPS	* PHASE TOTALS	VA	AMPS	BUS TOTALS	KVA	
TOTAL CONNECTED	43.6	121.0	* PHASE A	13378.9	111.4	CONNECTED	43.6	DATE: Feb 12, 2002
TOTAL DEMAND	15.4	42.9	* PHASE B	15959.6	132.9	DEMAND	15.4	TIME: 08:57:56
TOTAL DESIGN	15.4	42.9	* PHASE C	14306.0	119.1	DESIGN	15.4	

1PNL-A2G_SCH

PANEL: PNL-A2G SCH — OC DEVICE TYPE: Breaker — ENCLOSURE: NEMA 1 — MAINS(A): MLO — BUS RATING(A): 225
LOCATION: — DEVICE FAMILY: Bolt On — MOUNTING: Surface — WIRING: 4 Wire — WITHSTAND(A): 10000
FED FROM: PNL A2G — VOLTAGE: 208 / 120 — FAULT CURRENT(A): 3351

OC AMPS P	NOTES	DESCRIPTION	DEMAND CODE	VA	CKT	PHASE LOADS VA A	B	C	CKT	VA	DEMAND CODE	DESCRIPTION	NOTES	OC AMPS P
20 1		ROOM 2140 RECP.	RECEPTA	600	1	2415			2	1876	H.V.A.C	RM 2140 PTAC		20 2
20 1		ROOM 2140 RECP.	RECEPTA	961	3		2751		4	1876		""		""
20 1		ROOM 2140 LTG/RECP.	RECEPTA	1201	5			2978	6	1876	H.V.A.C	RM 2142 PTAC		20 2
20 1		ROOM 2142 RECP.	RECEPTA	600	7	2415			8	1876		""		""
20 1		ROOM 2142 RECP,	RECEPTA	1321	9		3092		10	1876	H.V.A.C	RM 2144 PTAC		20 2
20 1		ROOM 2142 LTG/RECP.	RECEPTA	1201	11			2978	12	1876		""		""
20 1		ROOM 2144 RECP.	RECEPTA	600	13	2415			14	1876	H.V.A.C	RM 2146 PTAC		20 2
20 1		ROOM 2144 RECP.	RECEPTA	961	15		2751		16	1876		""		""
20 1		ROOM 2144 LTG/RECP.	RECEPTA	1201	17			2978	18	1876	H.V.A.C	RM 2147 PTAC		20 2
20 1		ROOM 2146 RECP.	RECEPTA	600	19	2415			20	1876		""		""
20 1		ROOM 2146 RECP.	RECEPTA	1321	21		2670		22	1443	H.V.A.C	RM 2148 PTAC		15 2
20 1		ROOM 2146 LTG/RECP.	RECEPTA	1201	23			2555	24	1443		""		""
20 1		ROOM 2147 RECP.	RECEPTA	600	25	2044			26	1732	H.V.A.C	CUH-2.7		20 2
20 1		ROOM 2147 RECP.	RECEPTA	1321	27		3048		28	1732		""		""
20 1		ROOM 2147 LTG/RECP.	RECEPTA	1201	29			1201	30	0	SPARE	SPARE		20 1
20 1		ROOM 2148 RECP.	RECEPTA	600	31	600			32	0	SPARE	SPARE		20 1
20 1		ROOM 2148 RECP.	RECEPTA	1321	33		1321		34	0	SPARE	SPARE		20 1
20 1		ROOM 2148 LTG/RECP.	RECEPTA	1276	35			1276	36	0	SPARE	SPARE		20 1
0 1		SPACE		0	37	0			38	0		SPACE		0 1
0 1		SPACE		0	39		0		40	0		SPACE		0 1
0 1		SPACE		0	41			0	42	0		SPACE		0 1

ALL CONNECTED	KVA	AMPS	* PHASE TOTALS	VA	AMPS	BUS TOTALS	KVA	
TOTAL CONNECTED	39.3	109.0	* PHASE A	10897.4	90.7	CONNECTED	39.3	DATE: Feb 12, 2002
TOTAL DEMAND	14.1	39.0	* PHASE B	15050.6	125.3	DEMAND	14.1	TIME: 08:57:56
TOTAL DESIGN	14.1	39.0	* PHASE C	13407.7	111.6	DESIGN	14.1	

1PNL-A2M_SCH

PANEL: PNL-A2M SCH — OC DEVICE TYPE: Breaker — ENCLOSURE: NEMA 1 — MAINS(A): MLO — BUS RATING(A): 400
LOCATION: — DEVICE FAMILY: Bolt On — MOUNTING: Surface — WIRING: 4 Wire — WITHSTAND(A): 22000
FED FROM: PNL A2M — VOLTAGE: 208 / 120 — FAULT CURRENT(A): 17621

OC AMPS P	NOTES	DESCRIPTION	DEMAND CODE	VA	CKT	PHASE LOADS VA A	B	C	CKT	VA	DEMAND CODE	DESCRIPTION	NOTES	OC AMPS P
0 1		SPACE		0	1	4589			2	4589	NONE	PNL A2D	Q2-H 225AF/100	100 3
0 1		SPACE		0	3		4589		4	4589		""		""
0 1		SPACE		0	5			4589	6	4589		""		""
100 3	Q2-H 225AF/100	PNL A2B	NONE	2598	7	7746			8	5149	NONE	PNL A2F	Q2-H 225AF/100	100 3
""		""		2598	9		7746		10	5149		""		""
""		""		2598	11			7746	12	5149		""		""
100 3	Q2-H 225AF/100	PNL A2C	NONE	3737	13	8421			14	4688	NONE	PNL A2G	Q2-H 225AF/100	100 3
""		""		3737	15		8421		16	4688		""		""
""		""		3737	17			8421	18	4688		""		""
20 1		SPARE	SPARE	0	19	4167			20	4167	H.V.A.C	CUH-2.11		60 3
20 1		SPARE	SPARE	0	21		4167		22	4167		""		""
20 1		SPARE	SPARE	0	23			4167	24	4167		""		""
20 1		SPARE	SPARE	0	25	0			26	0		SPACE		0 1
20 1		SPARE	SPARE	0	27		0		28	0		SPACE		0 1
0 1		SPACE		0	29			0	30	0		SPACE		0 1
0 1		SPACE		0	31	2162			32	2162	H.V.A.C	DRYER RCP		30 2
0 1		SPACE		0	33		2162		34	2162		""		""
0 1		SPACE		0	35			2162	36	2162	H.V.A.C	DRYER RCP		30 2
0 1		SPACE		0	37	2162			38	2162		""		""
0 1		SPACE		0	39		2162		40	2162	H.V.A.C	DRYER RCP		30 2
0 1		SPACE		0	41			2162	42	2162		""		""

ALL CONNECTED	KVA	AMPS	* PHASE TOTALS	VA	AMPS	BUS TOTALS	KVA	
TOTAL CONNECTED	204.4	567.3	* PHASE A	28664.0	238.7	CONNECTED	204.4	DATE: Feb 12, 2002
TOTAL DEMAND	72.9	202.5	* PHASE B	28664.0	238.7	DEMAND	72.9	TIME: 08:57:56
TOTAL DESIGN	72.9	202.5	* PHASE C	28664.0	238.7	DESIGN	72.9	

1PNL-A3B_SCH

PANEL: PNL-A3B SCH — OC DEVICE TYPE: Breaker — ENCLOSURE: NEMA 1 — MAINS(A): MLO — BUS RATING(A): 225
LOCATION: — DEVICE FAMILY: Bolt On — MOUNTING: Flush — WIRING: 4 Wire — WITHSTAND(A): 10000
FED FROM: PNL A3B — VOLTAGE: 208 / 120 — FAULT CURRENT(A): 7394

OC AMPS P	NOTES	DESCRIPTION	DEMAND CODE	VA	CKT	PHASE LOADS VA A	B	C	CKT	VA	DEMAND CODE	DESCRIPTION	NOTES	OC AMPS P
15 1		FCU-2.3	H.V.A.C	841	1	841			2	0		SPACE		0 1
0 1		SPACE		0	3		0		4	0		SPACE		0 1
0 1		SPACE		0	5			0	6	0		SPACE		0 1
0 1		SPACE		0	7	0			8	0		SPACE		0 1
0 1		SPACE		0	9		0		10	0		SPACE		0 1
0 1		SPACE		0	11			0	12	0		SPACE		0 1
0 1		SPACE		0	13	1443			14	1443	H.V.A.C	RM 3113 PTAC		15 2
0 1		SPACE		0	15		1443		16	1443		""		""
0 1		SPACE		0	17			1443	18	1443	H.V.A.C	RM 3111 PTAC		15 2
20 1		ROOM 3113 RECP.	RECEPTA	600	19	1986			20	1443		""		""
20 1		ROOM 3113 RECP.	RECEPTA	961	21		2326		22	1443	H.V.A.C	RM 3119 PTAC		15 2
20 1		ROOM 3113 LTG/RECP.	RECEPTA	1201	23			2555	24	1443		""		""
20 1		ROOM 3111 RECP.	RECEPTA	600	25	1986			26	1443	RECEPTA	RM 3121 PTAC		15 2
20 1		ROOM 3111 RECP.	RECEPTA	1321	27		2670		28	1443		""		""
20 1		ROOM 3111 LTG/RECP.	RECEPTA	1201	29			1891	30	690	RECEPTA	ROOM 3112,14 LTG/REC		20 1
20 1		ROOM 3119 RECP.	RECEPTA	600	31	1800			32	1200	RECEPTA	ROOM 3116 RECP.		20 1
20 1		ROOM 3119 RECP.	RECEPTA	1321	33		1321		34	0		SPACE		0 1
20 1		ROOM 3119 LTG/RECP.	RECEPTA	1201	35			1201	36	0		SPACE		0 1
20 1		ROOM 3121 RECP.	RECEPTA	600	37	600			38	0	SPARE	SPARE		20 1
20 1		ROOM 3121 RECP.	RECEPTA	961	39		961		40	0	SPARE	SPARE		20 1
20 1		ROOM 3121 LTG/RECP.	RECEPTA	1201	41			1201	42	0	SPARE	SPARE		20 1

ALL CONNECTED	KVA	AMPS	* PHASE TOTALS	VA	AMPS	BUS TOTALS	KVA	
TOTAL CONNECTED	24.5	68.0	* PHASE A	8222.4	68.5	CONNECTED	24.5	DATE: Feb 12, 2002
TOTAL DEMAND	7.8	21.6	* PHASE B	8345.3	69.5	DEMAND	7.8	TIME: 08:57:56
TOTAL DESIGN	7.8	21.6	* PHASE C	7994.0	66.6	DESIGN	7.8	

This panel shall be 14 inches wide

1PNL-A3C_SCH

PANEL: PNL-A3C SCH — OC DEVICE TYPE: Breaker — ENCLOSURE: NEMA 1 — MAINS(A): MLO — BUS RATING(A): 225
LOCATION: — DEVICE FAMILY: Bolt On — MOUNTING: Flush — WIRING: 4 Wire — WITHSTAND(A): 10000
FED FROM: PNL A3C — VOLTAGE: 208 / 120 — FAULT CURRENT(A): 4545

OC AMPS P	NOTES	DESCRIPTION	DEMAND CODE	VA	CKT	PHASE LOADS VA A	B	C	CKT	VA	DEMAND CODE	DESCRIPTION	NOTES	OC AMPS P
20 1		ROOM 3120 RECP.	RECEPTA	600	1	1986			2	1443	H.V.A.C	RM 3120 PTAC		15 2
20 1		ROOM 3120 RECP.	RECEPTA	961	3		2326		4	1443		""		""
20 1		ROOM 3120 LTG/RECP.	RECEPTA	1201	5			2555	6	1443	H.V.A.C	RM 3122 PTAC		15 2
20 1		ROOM 3122 RECP.	RECEPTA	600	7	1986			8	1443		""		""
20 1		ROOM 3122 RECP.	RECEPTA	961	9		2326		10	1443	H.V.A.C	RM 3123 PTAC		15 2
20 1		ROOM 3122 LTG/RECP.	RECEPTA	1201	11			2555	12	1443		""		""
20 1		ROOM 3123 RECP.	RECEPTA	600	13	1986			14	1443	H.V.A.C	RM 3124 PTAC		15 2
20 1		ROOM 3123 RECP.	RECEPTA	961	15		2326		16	1443		""		""
20 1		ROOM 3123 LTG/RECP.	RECEPTA	1201	17			2555	18	1443	H.V.A.C	RM 3125 PTAC		15 2
20 1		ROOM 3124 RECP.	RECEPTA	600	19	1986			20	1443		""		""
20 1		ROOM 3124 RECP.	RECEPTA	961	21		2326		22	1443	H.V.A.C	RM 3126 PTAC		15 2
20 1		ROOM 3124 LTG/RECP.	RECEPTA	1201	23			2555	24	1443		""		""
20 1		ROOM 3125 RECP.	RECEPTA	600	25	1515			26	915	RECEPTA	RM. 3117,29,31 LTG/R		20 1
20 1		ROOM 3125 RECP.	RECEPTA	1321	27		1321		28	0	SPARE	SPARE		20 1
20 1		ROOM 3125 LTG/RECP.	RECEPTA	1201	29			1201	30	0	SPARE	SPARE		20 1
20 1		ROOM 3126 RECP.	RECEPTA	600	31	600			32	0		SPACE		0 1
20 1		ROOM 3126 RECP.	RECEPTA	961	33		961		34	0		SPACE		0 1
20 1		ROOM 3126 LTG/RECP.	RECEPTA	1201	35			1201	36	0		SPACE		0 1
0 1		SPACE		0	37	0			38	0		SPACE		0 1
0 1		SPACE		0	39		0		40	0		SPACE		0 1
0 1		SPACE		0	41			0	42	0		SPACE		0 1

ALL CONNECTED	KVA	AMPS	* PHASE TOTALS	VA	AMPS	BUS TOTALS	KVA	
TOTAL CONNECTED	32.8	91.2	* PHASE A	9515.0	79.2	CONNECTED	32.8	DATE: Feb 12, 2002
TOTAL DEMAND	11.2	31.1	* PHASE B	11126.0	92.6	DEMAND	11.2	TIME: 08:57:56
TOTAL DESIGN	11.2	31.1	* PHASE C	12206.0	101.6	DESIGN	11.2	

I hereby certify this drawing was prepared by me or under my direct supervision and that I am a duly registered architect under the laws of the State of Minnesota.

For: MEAD & HUNT, INC.

By:
Title: PROJECT MANAGER
Registration No: 22452

ALL SCALES SHOWN ARE BASED ON A STANDARD DRAWING SIZE OF 28" X 40" OR METRIC DRAWING SIZE OF 841mm X 594mm. IF ANY OTHER SIZE DRAWINGS ARE FURNISHED OR PLOTTED THE CONTRACTOR SHALL ADJUST THE SCALES ACCORDINGLY. THE CONTRACTOR SHALL ALSO ADVISE HIS SUB-CONTRACTORS OF THE ABOVE.

Revisions

Symbol	Descriptions	Date	Approved

Architect: ARCHITECTURAL ALLIANCE, MINNEAPOLIS, MINNESOTA
Engineer: MEAD & HUNT, MADISON, WISCONSIN
U.S. ARMY ENGINEER DISTRICT, CORPS OF ENGINEERS, OMAHA, NEBRASKA

Designed by: JAJ
Drawn by: FCB
Checked by: JAJ
Reviewed by: REC
Submitted by:

MINNEAPOLIS–ST.PAUL AFR — MINNESOTA

CONSOLIDATED LODGING FACILITY
– PHASE THREE –

ELECTRICAL SCHEDULES

Plot Scale Ratio: 1: 1
Design File: 8785e74.DWG
Date: 2–14–2002
Spec. No.: DACA 45–02–B–0008
Contract No.: DACA
Drawing Code: AF 721–315–03
Sheet reference number: E7.4

QJKL-990011P3

1PNL-A3D_SCH

PANEL: PNL-A3D SCH | OC DEVICE TYPE: Breaker | ENCLOSURE: NEMA 1 | MAINS(A): MLO | BUS RATING(A): 225
LOCATION: | DEVICE FAMILY: Bolt On | MOUNTING: Surface | WIRING: 4 Wire | WITHSTAND(A): 10000
FED FROM: PNL A3D | VOLTAGE: 208 / 120 | FAULT CURRENT(A): 7394

OC AMPS P	NOTES	DESCRIPTION	DEMAND CODE	VA	CKT	PHASE LOADS VA A	B	C	CKT	VA	DEMAND CODE	DESCRIPTION	NOTES	OC AMPS P
20 1		ROOM 3133 RECP.	RECEPTA	600	1	1986			2	1443	H.V.A.C	RM 3133 PTAC		15 2
20 1		ROOM 3133 RECP.	RECEPTA	1321	3		2670		4	1443		""		""
20 1		ROOM 3133 LTG/RECP.	RECEPTA	1201	5			2555	6	1443	H.V.A.C	RM 3135 PTAC		15 2
20 1		ROOM 3135 RECP.	RECEPTA	600	7	1986			8	1443		""		""
20 1		ROOM 3135 RECP.	RECEPTA	961	9		2326		10	1443	H.V.A.C	RM 3137 PTAC		15 2
20 1		ROOM 3135 LTG/RECP.	RECEPTA	1201	11			2555	12	1443		""		""
20 1		ROOM 3137 RECP.	RECEPTA	600	13	1986			14	1443	H.V.A.C	RM 3139 PTAC		15 2
20 1		ROOM 3137 RECP.	RECEPTA	1321	15		2670		16	1443		""		""
20 1		ROOM 3137 LTG/RECP.	RECEPTA	1201	17			2555	18	1443	H.V.A.C	RM 3141 PTAC		15 2
20 1		ROOM 3139 RECP.	RECEPTA	600	19	1986			20	1443		""		""
20 1		ROOM 3139 RECP.	RECEPTA	961	21		2326		22	1443	H.V.A.C	RM 3143 PTAC		15 2
20 1		ROOM 3139 LTG/RECP.	RECEPTA	1201	23			2555	24	1443		""		""
20 1		ROOM 3141 RECP.	RECEPTA	600	25	2415			26	1876	H.V.A.C	RM 3145 PTAC		20 2
20 1		ROOM 3141 RECP.	RECEPTA	961	27		2751		28	1876		""		""
20 1		ROOM 3141 LTG/RECP.	RECEPTA	1201	29			1201	30	0	SPARE	SPARE		20 1
20 1		ROOM 3143 RECP.	RECEPTA	600	31	600			32	0	SPARE	SPARE		20 1
20 1		ROOM 3143 RECP.	RECEPTA	961	33		961		34	0	SPARE	SPARE		20 1
20 1		ROOM 3143 LTG/RECP.	RECEPTA	1201	35			1201	36	0	SPARE	SPARE		20 1
20 1		ROOM 3145 RECP.	RECEPTA	600	37	1321			38	721	BUILDIN	WASHER RCP 3129		20 1
20 1		ROOM 3145 RECP.	RECEPTA	961	39		1682		40	721	BUILDIN	WASHER RCP 3129		20 1
20 1		ROOM 3145 LTG/RECP.	RECEPTA	1201	41			1922	42	721	BUILDIN	WASHER RCP 3129		20 1

ALL CONNECTED	KVA	AMPS	* PHASE TOTALS	VA	AMPS	BUS TOTALS	KVA	
TOTAL CONNECTED	40.5	112.3	* PHASE A	11583.6	96.5	CONNECTED	40.5	DATE: Feb 12, 2002
TOTAL DEMAND	13.8	38.2	* PHASE B	14822.3	123.4	DEMAND	13.8	TIME: 08:57:56
TOTAL DESIGN	13.8	38.2	* PHASE C	14127.5	117.6	DESIGN	13.8	

1PNL-A3F_SCH

PANEL: PNL-A3F SCH | OC DEVICE TYPE: Breaker | ENCLOSURE: NEMA 1 | MAINS(A): MLO | BUS RATING(A): 225
LOCATION: | DEVICE FAMILY: Bolt On | MOUNTING: Flush | WIRING: 4 Wire | WITHSTAND(A): 10000
FED FROM: PNL A3F | VOLTAGE: 208 / 120 | FAULT CURRENT(A): 3460

OC AMPS P	NOTES	DESCRIPTION	DEMAND CODE	VA	CKT	PHASE LOADS VA A	B	C	CKT	VA	DEMAND CODE	DESCRIPTION	NOTES	OC AMPS P
20 1		SPARE	SPARE	0	1	1876			2	1876	H.V.A.C	RM 3128 PTAC		20 2
20 1		ROOM 3128 RECP.	RECEPTA	1321	3		3092		4	1876		""		""
20 1		ROOM 3128 LTG/RECP.	RECEPTA	1201	5			2978	6	1876	H.V.A.C	RM 3130 PTAC		20 2
20 1		ROOM 3130 RECP.	RECEPTA	600	7	2415			8	1876		""		""
20 1		ROOM 3130 RECP.	RECEPTA	961	9		2751		10	1876	H.V.A.C	RM 3132 PTAC		20 2
20 1		ROOM 3130 LTG/RECP.	RECEPTA	1201	11			2978	12	1876		""		""
20 1		ROOM 3132 RECP.	RECEPTA	600	13	2415			14	1876	H.V.A.C	RM 3134 PTAC		20 2
20 1		ROOM 3132 RECP.	RECEPTA	961	15		2751		16	1876		""		""
20 1		ROOM 3132 LTG/RECP.	RECEPTA	1201	17			2978	18	1876	H.V.A.C	RM 3136 PTAC		20 2
20 1		ROOM 3134 RECP.	RECEPTA	600	19	2415			20	1876		""		""
20 1		ROOM 3134 RECP.	RECEPTA	1321	21		3092		22	1876	H.V.A.C	RM 3138 PTAC		20 2
20 1		ROOM 3134 LTG/RECP.	RECEPTA	1201	23			2978	24	1876		""		""
20 1		ROOM 3136 RECP.	RECEPTA	600	25	2415			26	1876	H.V.A.C	RM 3128 PTAC		20 2
20 1		ROOM 3136 RECP.	RECEPTA	961	27		2751		28	1876		""		""
20 1		ROOM 3136 LTG/RECP.	RECEPTA	1201	29			1801	30	600	RECEPTA	ROOM 3128 RECP.		20 1
20 1		ROOM 3138 RECP.	RECEPTA	600	31	1921			32	1321	RECEPTA	ROOM 3128 RECP.		20 1
20 1		ROOM 3138 RECP.	RECEPTA	961	33		2162		34	1201	RECEPTA	ROOM 3128 LTG/RECP.		20 1
20 1		ROOM 3138 LTG/RECP.	RECEPTA	1201	35			1201	36	0	SPARE	SPARE		20 1
20 1		CORRIDOR LTG.	RECEPTA	900	37	900			38	0	SPARE	SPARE		20 1
0 1		SPACE		0	39		0		40	0	SPARE	SPARE		20 1
0 1		SPACE		0	41			0	42	0	SPARE	SPARE		20 1

ALL CONNECTED	KVA	AMPS	* PHASE TOTALS	VA	AMPS	BUS TOTALS	KVA	
TOTAL CONNECTED	43.5	120.6	* PHASE A	13378.9	111.4	CONNECTED	43.5	DATE: Feb 12, 2002
TOTAL DEMAND	15.4	42.8	* PHASE B	15839.8	131.9	DEMAND	15.4	TIME: 08:57:57
TOTAL DESIGN	15.4	42.8	* PHASE C	14306.0	119.1	DESIGN	15.4	

1PNL-A3G_SCH

PANEL: PNL-A3G SCH | OC DEVICE TYPE: Breaker | ENCLOSURE: NEMA 1 | MAINS(A): MLO | BUS RATING(A): 225
LOCATION: | DEVICE FAMILY: Bolt On | MOUNTING: Surface | WIRING: 4 Wire | WITHSTAND(A): 10000
FED FROM: PNL A3G | VOLTAGE: 208 / 120 | FAULT CURRENT(A): 3264

OC AMPS P	NOTES	DESCRIPTION	DEMAND CODE	VA	CKT	PHASE LOADS VA A	B	C	CKT	VA	DEMAND CODE	DESCRIPTION	NOTES	OC AMPS P
20 1		ROOM 3140 RECP.	RECEPTA	600	1	2415			2	1876	H.V.A.C	RM 3140 PTAC		20 2
20 1		ROOM 3140 RECP.	RECEPTA	961	3		2751		4	1876		""		""
20 1		ROOM 3140 LTG/RECP.	RECEPTA	1201	5			2978	6	1876	H.V.A.C	RM 3142 PTAC		20 2
20 1		ROOM 3142 RECP.	RECEPTA	600	7	2415			8	1876		""		""
20 1		ROOM 3142 RECP,	RECEPTA	1321	9		3092		10	1876	H.V.A.C	RM 3144 PTAC		20 2
20 1		ROOM 3142 LTG/RECP.	RECEPTA	1201	11			2978	12	1876		""		""
20 1		ROOM 3144 RECP.	RECEPTA	600	13	2415			14	1876	H.V.A.C	RM 3146 PTAC		20 2
20 1		ROOM 3144 RECP.	RECEPTA	961	15		2751		16	1876		""		""
20 1		ROOM 3144 LTG/RECP.	RECEPTA	1201	17			2978	18	1876	H.V.A.C	RM 3147 PTAC		20 2
20 1		ROOM 3146 RECP.	RECEPTA	600	19	2415			20	1876		""		""
20 1		ROOM 3146 RECP.	RECEPTA	1321	21		2670		22	1443	H.V.A.C	RM 3148 PTAC		15 2
20 1		ROOM 3146 LTG/RECP.	RECEPTA	1201	23			2555	24	1443		""		""
20 1		ROOM 3147 RECP.	RECEPTA	600	25	2044			26	1732	H.V.A.C	CUH-2.8		20 2
20 1		ROOM 3147 RECP.	RECEPTA	1321	27		3048		28	1732		""		""
20 1		ROOM 3147 LTG/RECP.	RECEPTA	1201	29			1201	30	0	SPARE	SPARE		20 1
20 1		ROOM 3148 RECP.	RECEPTA	600	31	600			32	0	SPARE	SPARE		20 1
20 1		ROOM 3148 RECP.	RECEPTA	1321	33		1321		34	0		SPACE		0 1
20 1		ROOM 3148 LTG/RECP.	RECEPTA	1276	35			1276	36	0		SPACE		0 1
0 1		SPACE		0	37	0			38	0		SPACE		0 1
0 1		SPACE		0	39		0		40	0		SPACE		0 1
0 1		SPACE		0	41			0	42	0		SPACE		0 1

ALL CONNECTED	KVA	AMPS	* PHASE TOTALS	VA	AMPS	BUS TOTALS	KVA	
TOTAL CONNECTED	39.3	109.0	* PHASE A	10897.4	90.7	CONNECTED	39.3	DATE: Feb 12, 2002
TOTAL DEMAND	14.1	39.0	* PHASE B	15050.6	125.3	DEMAND	14.1	TIME: 08:57:57
TOTAL DESIGN	14.1	39.0	* PHASE C	13407.7	111.6	DESIGN	14.1	

1PNL-A3M__SCH

PANEL: PNL-A3M SCH | OC DEVICE TYPE: Breaker | ENCLOSURE: NEMA 1 | MAINS(A): MLO | BUS RATING(A): 400
LOCATION: | DEVICE FAMILY: Bolt On | MOUNTING: Surface | WIRING: 4 Wire | WITHSTAND(A): 22000
FED FROM: PNL A3M | VOLTAGE: 208 / 120 | FAULT CURRENT(A): 16868

OC AMPS P	NOTES	DESCRIPTION	DEMAND CODE	VA	CKT	PHASE LOADS VA A	B	C	CKT	VA	DEMAND CODE	DESCRIPTION	NOTES	OC AMPS P
0 1		SPACE		0	1	4589			2	4589	NONE	PNL A3D	Q2-H 225AF/100	100 3
0 1		SPACE		0	3		4589		4	4589		""		""
0 1		SPACE		0	5			4589	6	4589		""		""
100 3	Q2-H 225AF/100	PNL A3B	NONE	2598	7	7736			8	5139	NONE	PNL A3F	Q2-H 225AF/100	100 3
""		""		2598	9		7736		10	5139		""		""
""		""		2598	11			7736	12	5139		""		""
100 3	Q2-H 225AF/100	PNL A3C	NONE	3737	13	8421			14	4688	NONE	PNL A3G	Q2-H 225AF/100	100 3
""		""		3737	15		8421		16	4688		""		""
""		""		3737	17			8421	18	4688		""		""
20 1		SPARE	SPARE	0	19	4167			20	4167	H.V.A.C	CUH-2.12		60 3
20 1		SPARE	SPARE	0	21		4167		22	4167		""		""
20 1		SPARE	SPARE	0	23			4167	24	4167		""		""
20 1		SPARE	SPARE	0	25	0			26	0		SPACE		0 1
20 1		SPARE	SPARE	0	27		0		28	0		SPACE		0 1
20 1		SPARE	SPARE	0	29			0	30	0		SPACE		0 1
0 1		SPACE		0	31	2162			32	2162	H.V.A.C	DRYER RCP		30 2
0 1		SPACE		0	33		2162		34	2162		""		""
0 1		SPACE		0	35			2162	36	2162	H.V.A.C	DRYER RCP		30 2
0 1		SPACE		0	37	2162			38	2162		""		""
0 1		SPACE		0	39		2162		40	2162	H.V.A.C	DRYER RCP		30 2
0 1		SPACE		0	41			2162	42	2162		""		""

ALL CONNECTED	KVA	AMPS	* PHASE TOTALS	VA	AMPS	BUS TOTALS	KVA	
TOTAL CONNECTED	204.3	566.9	* PHASE A	28654.0	238.6	CONNECTED	204.3	DATE: Feb 12, 2002
TOTAL DEMAND	72.9	202.4	* PHASE B	28654.0	238.6	DEMAND	72.9	TIME: 08:57:57
TOTAL DESIGN	72.9	202.4	* PHASE C	28654.0	238.6	DESIGN	72.9	

1PNL-A4B_SCH

PANEL: PNL-A4B SCH | OC DEVICE TYPE: Breaker | ENCLOSURE: NEMA 1 | MAINS(A): MLO | BUS RATING(A): 225
LOCATION: | DEVICE FAMILY: Bolt On | MOUNTING: Flush | WIRING: 4 Wire | WITHSTAND(A): 10000
FED FROM: PNL A4B | VOLTAGE: 208 / 120 | FAULT CURRENT(A): 7261

OC AMPS P	NOTES	DESCRIPTION	DEMAND CODE	VA	CKT	PHASE LOADS VA A	B	C	CKT	VA	DEMAND CODE	DESCRIPTION	NOTES	OC AMPS P
15 1		FCU-2.4	H.V.A.C	841	1	1441			2	600	RECEPTA	ROOM 4123 RECP.		20 1
0 1		SPACE		0	3		961		4	961	RECEPTA	ROOM 4123 RECP.		20 1
0 1		SPACE		0	5			1201	6	1201	RECEPTA	ROOM 4123 LTG/RECP.		20 1
0 1		SPACE		0	7	0			8	0		SPACE		0 1
0 1		SPACE		0	9		1443		10	1443	H.V.A.C	RM 4113 PTAC		15 2
0 1		SPACE		0	11			1443	12	1443		""		""
20 1		EF-2.1	H.V.A.C	961	13	2326			14	1443	H.V.A.C	RM 4113 PTAC		15 2
0 1		SPACE		0	15		1443		16	1443		""		""
0 1		SPACE		0	17			1443	18	1443	H.V.A.C	RM 4111 PTAC		15 2
20 1		ROOM 4113 RECP.	RECEPTA	600	19	1986			20	1443		""		""
20 1		ROOM 4113 RECP.	RECEPTA	961	21		2326		22	1443	H.V.A.C	RM 4119 PTAC		15 2
20 1		ROOM 4113 LTG/RECP.	RECEPTA	1201	23			2555	24	1443		""		""
20 1		ROOM 4111 RECP.	RECEPTA	600	25	1986			26	1443	RECEPTA	RM 4121 PTAC		15 2
20 1		ROOM 4111 RECP.	RECEPTA	1321	27		2670		28	1443		""		""
20 1		ROOM 4111 LTG/RECP.	RECEPTA	1201	29			1891	30	690	RECEPTA	ROOM 4112,14 LTG/REC		20 1
20 1		ROOM 4119 RECP.	RECEPTA	600	31	1800			32	1200	RECEPTA	ROOM 4116 RECP.		20 1
20 1		ROOM 4119 RECP.	RECEPTA	1321	33		1321		34	0		SPACE		0 1
20 1		ROOM 4119 LTG/RECP.	RECEPTA	1201	35			1201	36	0		SPACE		0 1
20 1		ROOM 4121 RECP.	RECEPTA	600	37	600			38	0	SPARE	SPARE		20 1
20 1		ROOM 4121 RECP.	RECEPTA	961	39		961		40	0	SPARE	SPARE		20 1
20 1		ROOM 4121 LTG/RECP.	RECEPTA	1201	41			1201	42	0	SPARE	SPARE		20 1

ALL CONNECTED	KVA	AMPS	* PHASE TOTALS	VA	AMPS	BUS TOTALS	KVA	
TOTAL CONNECTED	30.7	85.3	* PHASE A	9778.0	81.4	CONNECTED	30.7	DATE: Feb 12, 2002
TOTAL DEMAND	10.0	27.9	* PHASE B	10525.0	87.6	DEMAND	10.0	TIME: 08:57:57
TOTAL DESIGN	10.0	27.9	* PHASE C	10469.9	87.2	DESIGN	10.0	

This panel shall be 14 inches wide

1PNL-A4C_SCH

PANEL: PNL-A4C SCH | OC DEVICE TYPE: Breaker | ENCLOSURE: NEMA 1 | MAINS(A): MLO | BUS RATING(A): 225
LOCATION: | DEVICE FAMILY: Bolt On | MOUNTING: Flush | WIRING: 4 Wire | WITHSTAND(A): 10000
FED FROM: PNL A4C | VOLTAGE: 208 / 120 | FAULT CURRENT(A): 4497

OC AMPS P	NOTES	DESCRIPTION	DEMAND CODE	VA	CKT	PHASE LOADS VA A	B	C	CKT	VA	DEMAND CODE	DESCRIPTION	NOTES	OC AMPS P
20 1		ROOM 4120 RECP.	RECEPTA	600	1	1986			2	1443	H.V.A.C	RM 4120 PTAC		15 2
20 1		ROOM 4120 RECP.	RECEPTA	961	3		2326		4	1443		""		""
20 1		ROOM 4120 LTG/RECP.	RECEPTA	1201	5			2555	6	1443	H.V.A.C	RM 4122 PTAC		15 2
20 1		ROOM 4122 RECP.	RECEPTA	600	7	1986			8	1443		""		""
20 1		ROOM 4122 RECP.	RECEPTA	961	9		2326		10	1443	H.V.A.C	RM 4123 PTAC		15 2
20 1		ROOM 4122 LTG/RECP.	RECEPTA	1201	11			2555	12	1443		""		""
20 1		ROOM 4123 RECP.	RECEPTA	600	13	1986			14	1443	H.V.A.C	RM 4124 PTAC		15 2
20 1		ROOM 4123 RECP.	RECEPTA	961	15		2326		16	1443		""		""
20 1		ROOM 4123 LTG/RECP.	RECEPTA	1201	17			2555	18	1443	H.V.A.C	RM 4125 PTAC		15 2
20 1		ROOM 4124 RECP.	RECEPTA	600	19	1986			20	1443		""		""
20 1		ROOM 4124 RECP.	RECEPTA	961	21		2326		22	1443	H.V.A.C	RM 4126 PTAC		15 2
20 1		ROOM 4124 LTG/RECP.	RECEPTA	1201	23			2555	24	1443		""		""
20 1		ROOM 4125 RECP.	RECEPTA	600	25	1515			26	915	RECEPTA	RM. 4127,29,31 LTG/R		20 1
20 1		ROOM 4125 RECP.	RECEPTA	1321	27		1321		28	0	SPARE	SPARE		20 1
20 1		ROOM 4125 LTG/RECP.	RECEPTA	1201	29			1201	30	0	SPARE	SPARE		20 1
20 1		ROOM 4126 RECP.	RECEPTA	600	31	600			32	0	SPARE	SPARE		20 1
20 1		ROOM 4126 RECP.	RECEPTA	961	33		961		34	0	SPARE	SPARE		20 1
20 1		ROOM 4126 LTG/RECP.	RECEPTA	1201	35			1201	36	0	SPARE	SPARE		20 1
0 1		SPACE		0	37	0			38	0		SPACE		0 1
0 1		SPACE		0	39		0		40	0		SPACE		0 1
0 1		SPACE		0	41			0	42	0		SPACE		0 1

ALL CONNECTED	KVA	AMPS	* PHASE TOTALS	VA	AMPS	BUS TOTALS	KVA	
TOTAL CONNECTED	32.8	91.2	* PHASE A	9515.0	79.2	CONNECTED	32.8	DATE: Feb 12, 2002
TOTAL DEMAND	11.2	31.1	* PHASE B	11126.0	92.6	DEMAND	11.2	TIME: 08:57:57
TOTAL DESIGN	11.2	31.1	* PHASE C	12206.0	101.6	DESIGN	11.2	

1PNL-A4D_SCH

PANEL: PNL-A4D SCH | OC DEVICE TYPE: Breaker | ENCLOSURE: NEMA 1 | MAINS(A): MLO | BUS RATING(A): 225
LOCATION: | DEVICE FAMILY: Bolt On | MOUNTING: Surface | WIRING: 4 Wire | WITHSTAND(A): 10000
FED FROM: PNL A4D | VOLTAGE: 208 / 120 | FAULT CURRENT(A): 7261

OC AMPS P	NOTES	DESCRIPTION	DEMAND CODE	VA	CKT	PHASE LOADS VA A	B	C	CKT	VA	DEMAND CODE	DESCRIPTION	NOTES	OC AMPS P
20 1		ROOM 4133 RECP.	RECEPTA	600	1	1986			2	1443	H.V.A.C	RM 4133 PTAC		15 2
20 1		ROOM 4133 RECP.	RECEPTA	1321	3		2670		4	1443		""		""
20 1		ROOM 4133 LTG/RECP.	RECEPTA	1201	5			2555	6	1443	H.V.A.C	RM 4135 PTAC		15 2
20 1		ROOM 4135 RECP.	RECEPTA	600	7	1986			8	1443		""		""
20 1		ROOM 4135 RECP.	RECEPTA	961	9		2326		10	1443	H.V.A.C	RM 4137 PTAC		15 2
20 1		ROOM 4135 LTG/RECP.	RECEPTA	1201	11			2555	12	1443		""		""
20 1		ROOM 4137 RECP.	RECEPTA	600	13	1986			14	1443	H.V.A.C	RM 4139 PTAC		15 2
20 1		ROOM 4137 RECP.	RECEPTA	1321	15		2670		16	1443		""		""
20 1		ROOM 4137 LTG/RECP.	RECEPTA	1201	17			2555	18	1443	H.V.A.C	RM 4141 PTAC		15 2
20 1		ROOM 4139 RECP.	RECEPTA	600	19	1986			20	1443		""		""
20 1		ROOM 4139 RECP.	RECEPTA	961	21		2326		22	1443	H.V.A.C	RM 4143 PTAC		15 2
20 1		ROOM 4139 LTG/RECP.	RECEPTA	1201	23			2555	24	1443		""		""
20 1		ROOM 4141 RECP.	RECEPTA	600	25	2415			26	1876	H.V.A.C	RM 4145 PTAC		20 2
20 1		ROOM 4141 RECP.	RECEPTA	961	27		2751		28	1876		""		""
20 1		ROOM 4141 LTG/RECP.	RECEPTA	1201	29			1201	30	0	SPARE	SPARE		20 1
20 1		ROOM 4143 RECP.	RECEPTA	600	31	600			32	0	SPARE	SPARE		20 1
20 1		ROOM 4143 RECP.	RECEPTA	961	33		1682		34	721	H.V.A.C	EF-2.3		15 1
20 1		ROOM 4143 LTG/RECP.	RECEPTA	1201	35			1201	36	0	SPARE	SPARE		20 1
20 1		ROOM 4145 RECP.	RECEPTA	600	37	1321			38	721	BUILDIN	WASHER RCP 1129		20 1
20 1		ROOM 4145 RECP.	RECEPTA	961	39		1682		40	721	BUILDIN	WASHER RCP 1129		20 1
20 1		ROOM 4145 LTG/RECP.	RECEPTA	1201	41			1922	42	721	BUILDIN	WASHER RCP 1129		20 1

ALL CONNECTED	KVA	AMPS	* PHASE TOTALS	VA	AMPS	BUS TOTALS	KVA	
TOTAL CONNECTED	41.2	114.3	* PHASE A	11583.6	96.5	CONNECTED	41.2	DATE: Feb 12, 2002
TOTAL DEMAND	14.1	39.1	* PHASE B	15541.4	129.4	DEMAND	14.1	TIME: 08:57:57
TOTAL DESIGN	14.1	39.1	* PHASE C	14127.5	117.6	DESIGN	14.1	

1PNL-A4F_SCH

PANEL: PNL-A4F SCH | OC DEVICE TYPE: Breaker | ENCLOSURE: NEMA 1 | MAINS(A): MLO | BUS RATING(A): 225
LOCATION: | DEVICE FAMILY: Bolt On | MOUNTING: Flush | WIRING: 4 Wire | WITHSTAND(A): 10000
FED FROM: PNL A4F | VOLTAGE: 208 / 120 | FAULT CURRENT(A): 3432

OC AMPS P	NOTES	DESCRIPTION	DEMAND CODE	VA	CKT	PHASE LOADS VA A	B	C	CKT	VA	DEMAND CODE	DESCRIPTION	NOTES	OC AMPS P
20 1		SPARE	SPARE	0	1	1876			2	1876	H.V.A.C	RM 4128 PTAC		20 2
20 1		ROOM 4128 RECP.	RECEPTA	1321	3		3092		4	1876		""		""
20 1		ROOM 4128 LTG/RECP.	RECEPTA	1201	5			2978	6	1876	H.V.A.C	RM 4130 PTAC		20 2
20 1		ROOM 4130 RECP.	RECEPTA	600	7	2415			8	1876		""		""
20 1		ROOM 4130 RECP.	RECEPTA	961	9		2751		10	1876	H.V.A.C	RM 4132 PTAC		20 2
20 1		ROOM 4130 LTG/RECP.	RECEPTA	1201	11			2978	12	1876		""		""
20 1		ROOM 4132 RECP.	RECEPTA	600	13	2415			14	1876	H.V.A.C	RM 4134 PTAC		20 2
20 1		ROOM 4132 RECP.	RECEPTA	961	15		2751		16	1876		""		""
20 1		ROOM 4132 LTG/RECP.	RECEPTA	1201	17			2978	18	1876	H.V.A.C	RM 4136 PTAC		20 2
20 1		ROOM 4134 RECP.	RECEPTA	600	19	2415			20	1876		""		""
20 1		ROOM 4134 RECP.	RECEPTA	1321	21		3092		22	1876	H.V.A.C	RM 4138 PTAC		20 2
20 1		ROOM 4134 LTG/RECP.	RECEPTA	1201	23			2978	24	1876		""		""
20 1		ROOM 4136 RECP.	RECEPTA	600	25	2415			26	1876	H.V.A.C	RM 4128 PTAC		20 2
20 1		ROOM 4136 RECP.	RECEPTA	961	27		2751		28	1876		""		""
20 1		ROOM 4136 LTG/RECP.	RECEPTA	1201	29			1801	30	600	RECEPTA	ROOM 4128 RECP.		20 1
20 1		ROOM 4138 RECP.	RECEPTA	600	31	1921			32	1321	RECEPTA	ROOM 4128 RECP.		20 1
20 1		ROOM 4138 RECP.	RECEPTA	961	33		2162		34	1201	RECEPTA	ROOM 4128 LTG/RECP.		20 1
20 1		ROOM 4138 LTG/RECP.	RECEPTA	1201	35			1201	36	0	SPARE	SPARE		20 1
20 1		CORRIDOR LTG.	RECEPTA	900	37	900			38	0		SPACE		0 1
0 1		SPACE		0	39		0		40	0		SPACE		0 1
0 1		SPACE		0	41			0	42	0		SPACE		0 1

ALL CONNECTED	KVA	AMPS	* PHASE TOTALS	VA	AMPS	BUS TOTALS	KVA	
TOTAL CONNECTED	43.5	120.6	* PHASE A	13378.9	111.4	CONNECTED	43.5	DATE: Feb 12, 2002
TOTAL DEMAND	15.4	42.8	* PHASE B	15839.8	131.9	DEMAND	15.4	TIME: 08:57:57
TOTAL DESIGN	15.4	42.8	* PHASE C	14306.0	119.1	DESIGN	15.4	

1PNL-A4G_SCH

PANEL: PNL-A4G SCH | OC DEVICE TYPE: Breaker | ENCLOSURE: NEMA 1 | MAINS(A): MLO | BUS RATING(A): 225
LOCATION: | DEVICE FAMILY: Bolt On | MOUNTING: Surface | WIRING: 4 Wire | WITHSTAND(A): 10000
FED FROM: PNL A4G | VOLTAGE: 208 / 120 | FAULT CURRENT(A): 3240

OC AMPS P	NOTES	DESCRIPTION	DEMAND CODE	VA	CKT	PHASE LOADS VA A	B	C	CKT	VA	DEMAND CODE	DESCRIPTION	NOTES	OC AMPS P
20 1		ROOM 4140 RECP.	RECEPTA	600	1	2415			2	1876	H.V.A.C	RM 4140 PTAC		20 2
20 1		ROOM 4140 RECP.	RECEPTA	961	3		2751		4	1876		""		""
20 1		ROOM 4140 LTG/RECP.	RECEPTA	1201	5			2978	6	1876	H.V.A.C	RM 4142 PTAC		20 2
20 1		ROOM 4142 RECP.	RECEPTA	600	7	2415			8	1876		""		""
20 1		ROOM 4142 RECP,	RECEPTA	1321	9		3092		10	1876	H.V.A.C	RM 4144 PTAC		20 2
20 1		ROOM 4142 LTG/RECP.	RECEPTA	1201	11			2978	12	1876		""		""
20 1		ROOM 4144 RECP.	RECEPTA	600	13	2415			14	1876	H.V.A.C	RM 4146 PTAC		20 2
20 1		ROOM 4144 RECP.	RECEPTA	961	15		2751		16	1876		""		""
20 1		ROOM 4144 LTG/RECP.	RECEPTA	1201	17			2978	18	1876	H.V.A.C	RM 4147 PTAC		20 2
20 1		ROOM 4146 RECP.	RECEPTA	600	19	2415			20	1876		""		""
20 1		ROOM 4146 RECP.	RECEPTA	1321	21		2670		22	1443	H.V.A.C	RM 4148 PTAC		15 2
20 1		ROOM 4146 LTG/RECP.	RECEPTA	1201	23			2555	24	1443		""		""
20 1		ROOM 4147 RECP.	RECEPTA	600	25	600			26	0	SPARE	SPARE		20 1
20 1		ROOM 4147 RECP.	RECEPTA	1321	27		1321		28	0	SPARE	SPARE		20 1
20 1		ROOM 4147 LTG/RECP.	RECEPTA	1201	29			1201	30	0	SPARE	SPARE		20 1
20 1		ROOM 4148 RECP.	RECEPTA	600	31	600			32	0	SPARE	SPARE		20 1
20 1		ROOM 4148 RECP.	RECEPTA	1321	33		1321		34	0	SPARE	SPARE		20 1
20 1		ROOM 4148 LTG/RECP.	RECEPTA	1276	35			1276	36	0	SPARE	SPARE		20 1
15 1		EF-2.4	H.V.A.C	841	37	841			38	0		SPACE		0 1
20 2		CUH-2.9	H.V.A.C	1732	39		1732		40	0		SPACE		0 1
""		""		1732	41			1732	42	0		SPACE		0 1

ALL CONNECTED	KVA	AMPS	* PHASE TOTALS	VA	AMPS	BUS TOTALS	KVA	
TOTAL CONNECTED	40.1	111.4	* PHASE A	10940.6	91.1	CONNECTED	40.1	DATE: Feb 12, 2002
TOTAL DEMAND	14.4	40.1	* PHASE B	14078.8	117.2	DEMAND	14.4	TIME: 08:57:57
TOTAL DESIGN	14.4	40.1	* PHASE C	15131.5	126.0	DESIGN	14.4	

1PNL-A4M_SCH

PANEL: PNL-A4M SCH | OC DEVICE TYPE: Breaker | ENCLOSURE: NEMA 1 | MAINS(A): MLO | BUS RATING(A): 400
LOCATION: | DEVICE FAMILY: Bolt On | MOUNTING: Surface | WIRING: 4 Wire | WITHSTAND(A): 22000
FED FROM: PNL A4M | VOLTAGE: 208 / 120 | FAULT CURRENT(A): 16175

OC AMPS P	NOTES	DESCRIPTION	DEMAND CODE	VA	CKT	PHASE LOADS VA A	B	C	CKT	VA	DEMAND CODE	DESCRIPTION	NOTES	OC AMPS P
0 1		SPACE		0	1	4697			2	4697	NONE	PNL A4D	Q2-H 225AF/100	100 3
0 1		SPACE		0	3		4697		4	4697		""		""
0 1		SPACE		0	5			4697	6	4697		""		""
100 3	Q2-H 225AF/100	PNL A4B	NONE	3347	7	8486			8	5139	NONE	PNL A4F	Q2-H 225AF/100	100 3
""		""		3347	9		8486		10	5139		""		""
""		""		3347	11			8486	12	5139		""		""
100 3	Q2-H 225AF/100	PNL A4C	NONE	3737	13	8547			14	4813	NONE	PNL A4G	Q2-H 225AF/100	100 3
""		""		3737	15		8547		16	4813		""		""
""		""		3737	17			8547	18	4813		""		""
20 1		SPARE	SPARE	0	19	4167			20	4167	H.V.A.C	CUH-2.13		60 3
20 1		SPARE	SPARE	0	21		4167		22	4167		""		""
20 1		SPARE	SPARE	0	23			4167	24	4167		""		""
20 1		SPARE	SPARE	0	25	0			26	0		SPACE		0 1
20 1		SPARE	SPARE	0	27		0		28	0		SPACE		0 1
20 1		SPARE	SPARE	0	29			0	30	0		SPACE		0 1
0 1		SPACE		0	31	2162			32	2162	H.V.A.C	DRYER RCP		30 2
0 1		SPACE		0	33		2162		34	2162		""		""
0 1		SPACE		0	35			2162	36	2162	H.V.A.C	DRYER RCP		30 2
0 1		SPACE		0	37	2162			38	2162		""		""
0 1		SPACE		0	39		2162		40	2162	H.V.A.C	DRYER RCP		30 2
0 1		SPACE		0	41			2162	42	2162		""		""

ALL CONNECTED	KVA	AMPS	* PHASE TOTALS	VA	AMPS	BUS TOTALS	KVA	
TOTAL CONNECTED	212.0	588.6	* PHASE A	29637.4	246.8	CONNECTED	212.0	DATE: Feb 12, 2002
TOTAL DEMAND	75.9	210.6	* PHASE B	29637.4	246.8	DEMAND	75.9	TIME: 08:57:57
TOTAL DESIGN	75.9	210.6	* PHASE C	29637.4	246.8	DESIGN	75.9	

I hereby certify this drawing was prepared by me or under my direct supervision and that I am a duly registered architect under the laws of the State of Minnesota.

For: MEAD & HUNT, INC.

By:
Title: PROJECT MANAGER
Registration No: 22452

ALL SCALES SHOWN ARE BASED ON A STANDARD DRAWING SIZE OF 28" X 40" OR METRIC DRAWING SIZE OF 841mm X 594mm. IF ANY OTHER SIZE DRAWINGS ARE FURNISHED OR PLOTTED THE CONTRACTOR SHALL ADJUST THE SCALES ACCORDINGLY. THE CONTRACTOR SHALL ALSO ADVISE HIS SUB-CONTRACTORS OF THE ABOVE.

Revisions

Symbol	Descriptions	Date	Approved

Architect: ARCHITECTURAL ALLIANCE, MINNEAPOLIS, MINNESOTA
Engineer: MEAD & HUNT, MADISON, WISCONSIN
U.S. ARMY ENGINEER DISTRICT, CORPS OF ENGINEERS, OMAHA, NEBRASKA

MINNEAPOLIS–ST.PAUL AFR — MINNESOTA

CONSOLIDATED LODGING FACILITY
– PHASE THREE –

ELECTRICAL SCHEDULES

Designed by: JAJ
Drawn by: FCB
Checked by: JAJ
Reviewed by: REC
Submitted by:

Plot Scale Ratio: 1: 1
Design File: 8785e75,DWG
Date: 2–14–2002
Spec. No.: DACA 45–02–B–0008
Contract No.: DACA
Drawing Code: AF 721–315–03
Sheet reference number: E7.5

QJKL-990011P3