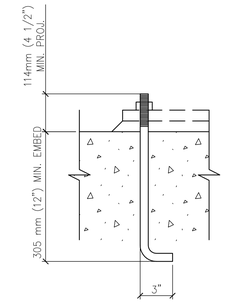

9 TYP. S2.3 — ANCHOR BOLTS — NO SCALE

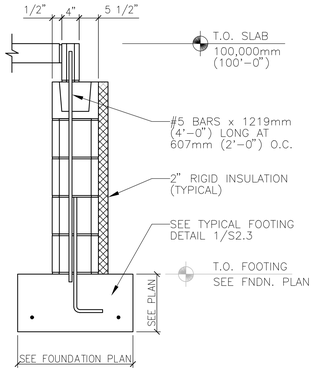

5 S1.4 S2.3 S1.8 — FOUNDATION WALL — NO SCALE

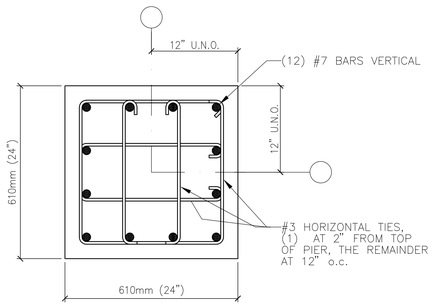

10 S1.4 S2.3 S1.8 — PIER REINFORCEMENT — NO SCALE

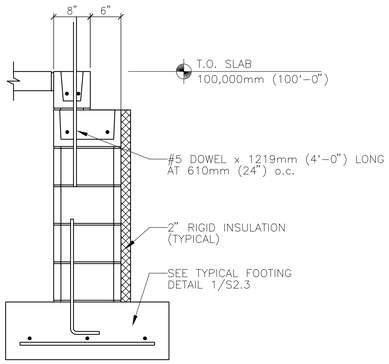

6 S1.4 S2.3 S1.8 — FOUNDATION WALL — NO SCALE

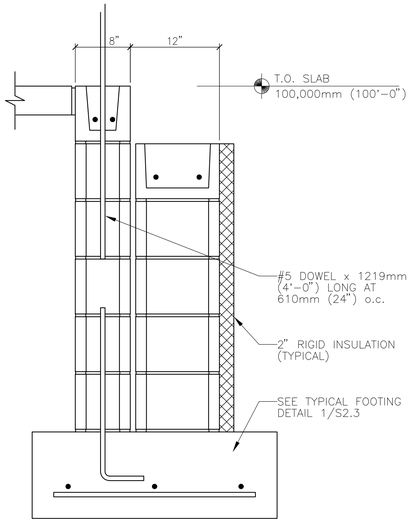

3 S1.4 S2.3 S1.8 — FOUNDATION WALL — NO SCALE

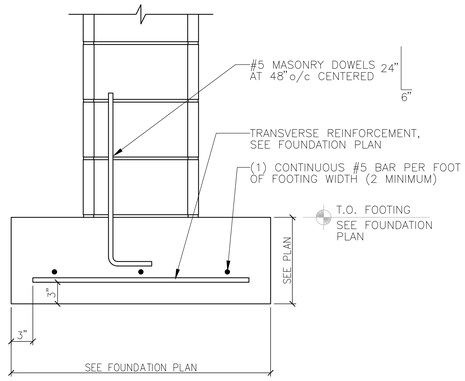

1 S1.4 S2.3 S1.8 — TYPICAL FOOTING DETAIL — NO SCALE

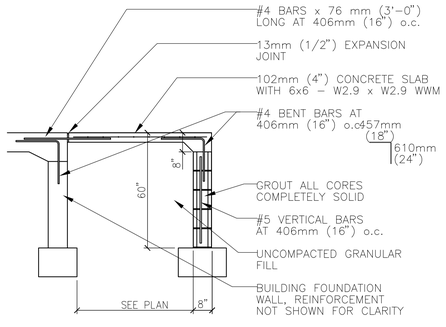

11 S1.4 S2.3 S1.8 — TYPICAL STOOP SECTION (TYPICAL FOR 3 SIDES) — NO SCALE

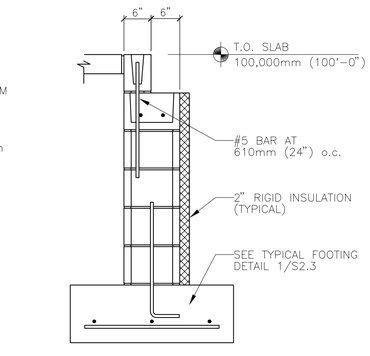

7 S1.4 S2.3 S1.8 — FOUNDATION WALL — NO SCALE

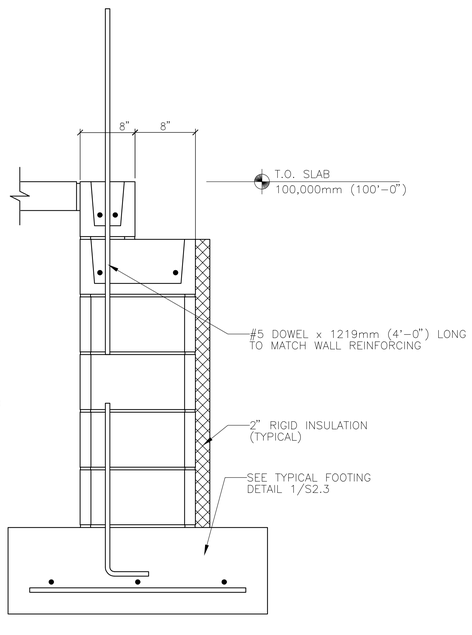

4 S1.4 S2.3 S1.8 — FOUNDATION WALL — NO SCALE

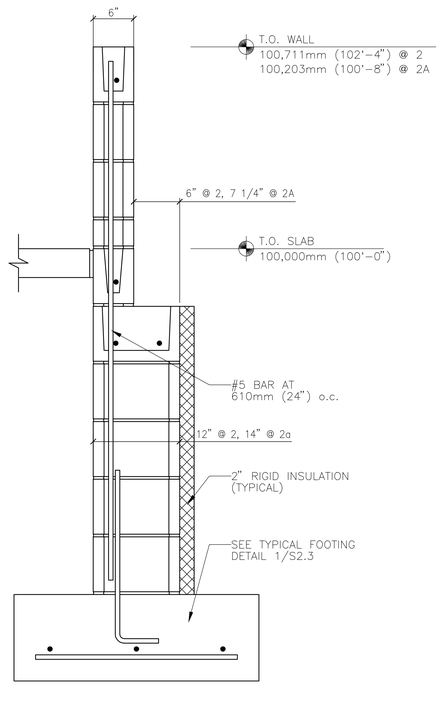

2 2A S1.4 S2.3 S1.8 — FOUNDATION WALL — NO SCALE

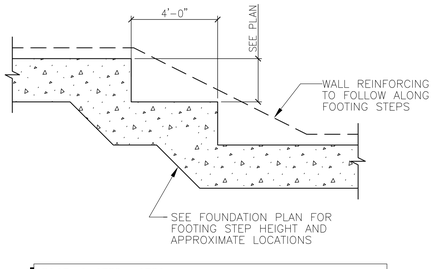

FOOTING STEP NOTES:
1. SEE FOUNDATION PLAN FOR FOOTING STEP LOCATIONS.
2. STEPPED FOOTING TO BE POURED MONOLITHICALLY.
3. MULTIPLE STEP SHOWN, SINGLE STEP SIMILAR.

12 TYP. S2.3 — TYPICAL STEPPED FOOTING — NO SCALE

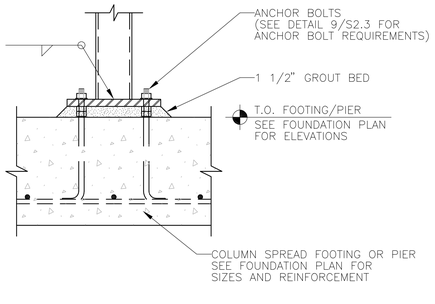

8 TYP. S2.3 — COLUMN ANCHORAGE — NO SCALE

I hereby certify this drawing was prepared by me or under my direct supervision and that I am a duly registered architect under the laws of the State of Minnesota.

For: MEAD & HUNT, INC.

By:
Title: PROJECT MANAGER
Registration No: 22452

ALL SCALES SHOWN ARE BASED ON A STANDARD DRAWING SIZE OF 28" X 40" OR METRIC DRAWING SIZE OF 841mm X 594mm. IF ANY OTHER SIZE DRAWINGS ARE FURNISHED OR PLOTTED THE CONTRACTOR SHALL ADJUST THE SCALES ACCORDINGLY. THE CONTRACTOR SHALL ALSO ADVISE HIS SUB-CONTRACTORS OF THE ABOVE.

Revisions

Symbol	Descriptions	Date	Approved

Architect: ARCHITECTURAL ALLIANCE MINNEAPOLIS, MINNESOTA

Engineer: MEAD & HUNT MADISON, WISCONSIN

U.S. ARMY ENGINEER DISTRICT CORPS OF ENGINEERS OMAHA, NEBRASKA

Designed by: JMM
Drawn by: ACT
Checked by: TLK
Reviewed by: REC
Submitted by:

MINNEAPOLIS-ST.PAUL AFR — MINNESOTA

CONSOLIDATED LODGING FACILITY
- PHASE THREE -

FOUNDATION DETAILS

Plot Scale Ratio: 1: 1
Design File: 8785S203.DWG
Date: 2-14-2002
Sheet reference number: S2.3
Spec. No.: DACA 45-02-B-0008
Contract No.: DACA
Drawing Code: AF 721-315-03

QJKL-990011P3

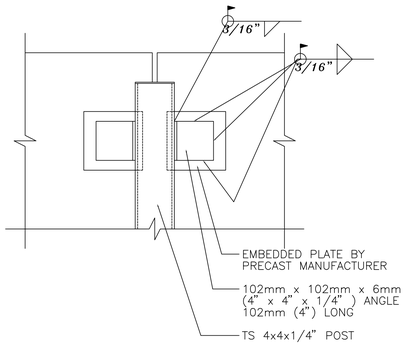

8 S2.4 | S2.4 SCREEN WALL CONNECTION AT STEEL POST
NO SCALE

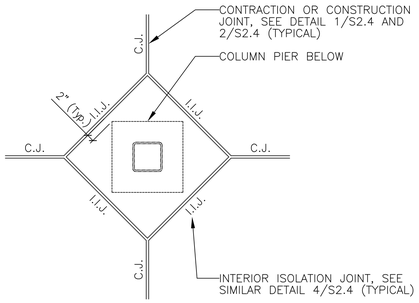

5 S1.5 | S2.4 TYPICAL COLUMN ISOLATION DETAIL
NO SCALE

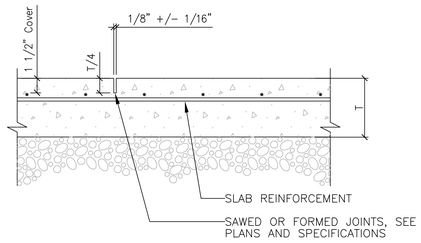

1 S1.5 | S2.4 CONTRACTION JOINT DETAIL
NO SCALE

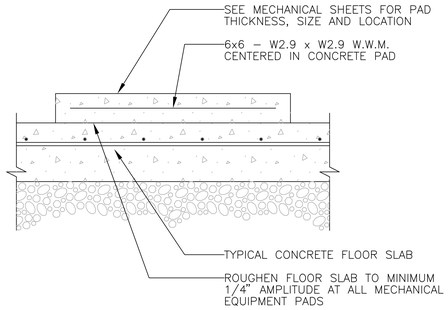

6 S1.5 | S2.4 MECHANICAL EQUIPMENT PAD
NO SCALE

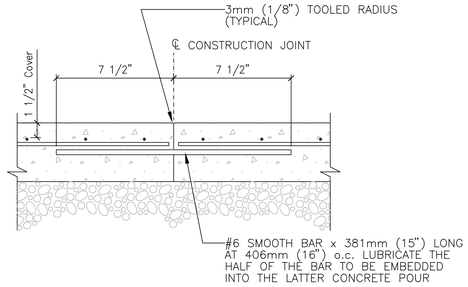

2 S1.5 | S2.4 CONSTRUCTION JOINT DETAIL
NO SCALE

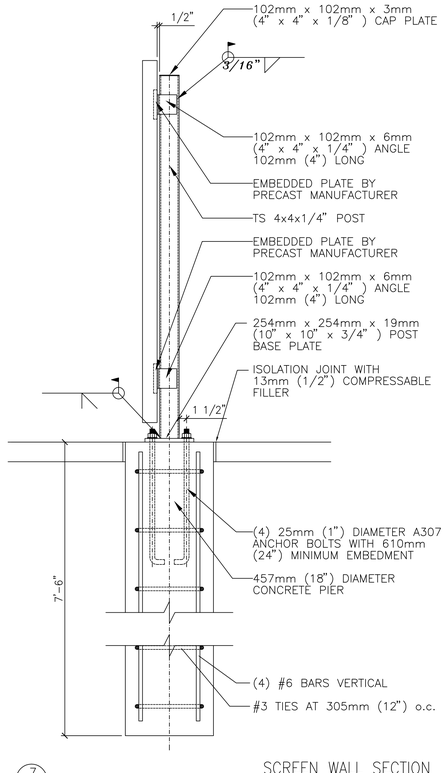

7 A2.3 | S2.4 SCREEN WALL SECTION
NO SCALE

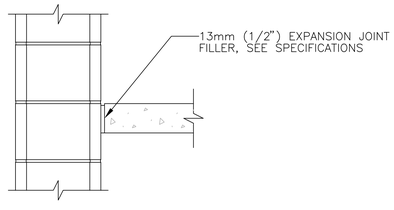

3 S1.5 | S2.4 EXTERIOR ISOLATION JOINT DETAIL
NO SCALE

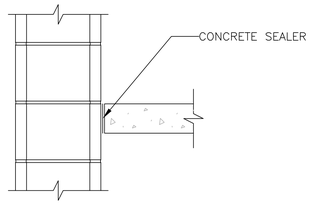

4 S1.5 | S2.4 INTERIOR ISOLATION JOINT DETAIL
NO SCALE

I hereby certify this drawing was prepared by me or under my direct supervision and that I am a duly registered architect under the laws of the State of Minnesota.

For: MEAD & HUNT, INC.

By:
Title: PROJECT MANAGER
Registration No: 22452

ALL SCALES SHOWN ARE BASED ON A STANDARD DRAWING SIZE OF 28" X 40" OR METRIC DRAWING SIZE OF 841mm X 594mm. IF ANY OTHER SIZE DRAWINGS ARE FURNISHED OR PLOTTED THE CONTRACTOR SHALL ADJUST THE SCALES ACCORDINGLY. THE CONTRACTOR SHALL ALSO ADVISE HIS SUB-CONTRACTORS OF THE ABOVE.

Revisions

Symbol	Descriptions	Date	Approved

Architect: ARCHITECTURAL ALLIANCE MINNEAPOLIS, MINNESOTA

Engineer: MEAD & HUNT MADISON, WISCONSIN

U.S. ARMY ENGINEER DISTRICT CORPS OF ENGINEERS OMAHA, NEBRASKA

Designed by: JMM
Drawn by: ACT
Checked by: TLK
Reviewed by: REC
Submitted by:

MINNEAPOLIS–ST.PAUL AFR MINNESOTA

CONSOLIDATED LODGING FACILITY
– PHASE THREE –

FOUNDATION DETAILS

Plot Scale Ratio: 1: 1
Design File: 8785S204.DWG
Date: 2–14–2002
Sheet reference number: S2.4
Spec. No.: DACA 45–02–B–0008
Contract No.: DACA
Drawing Code: AF 721–315–03

QJKL-990011P3

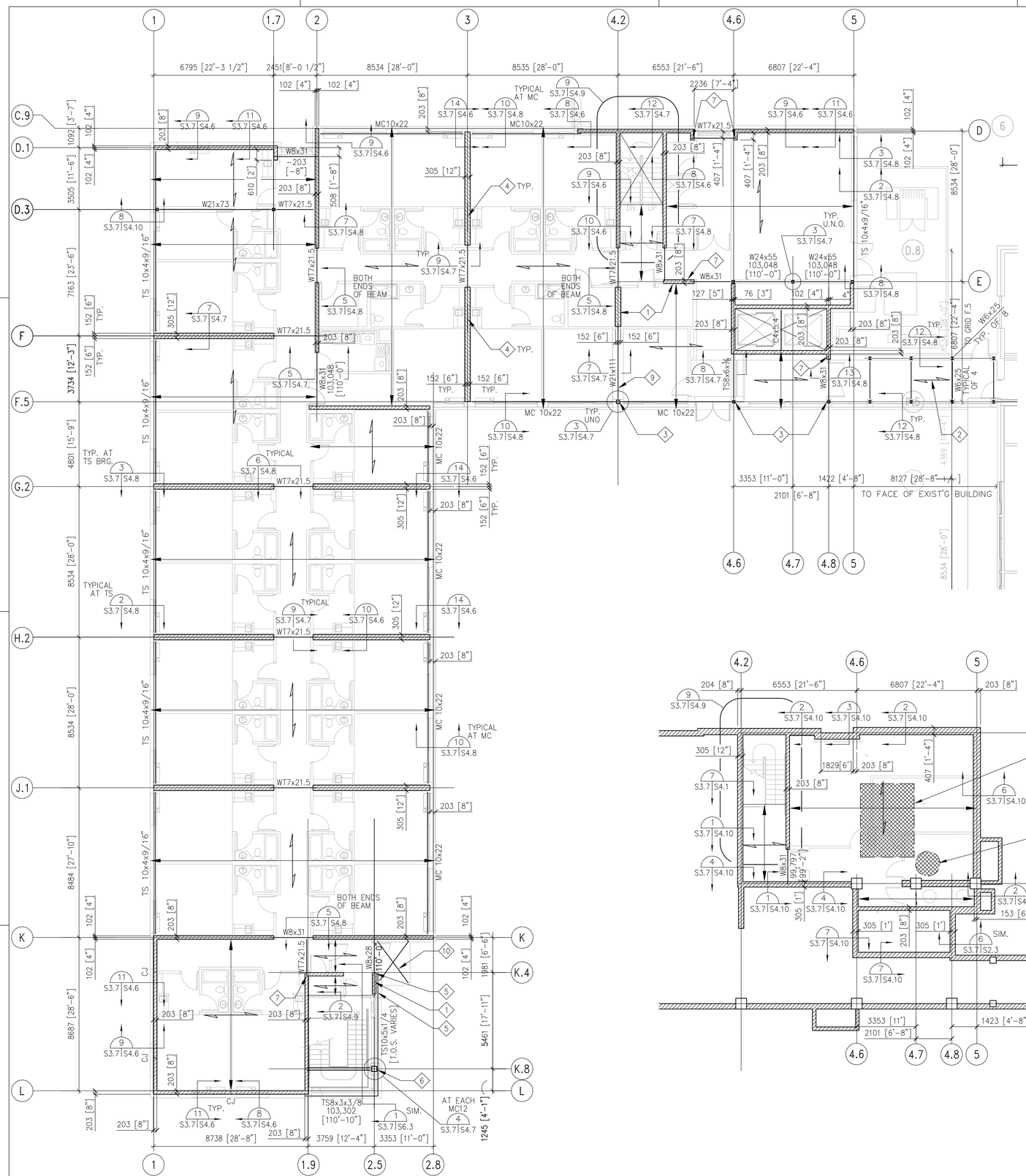

5A 2nd FLOOR FRAMING PLAN
1:100

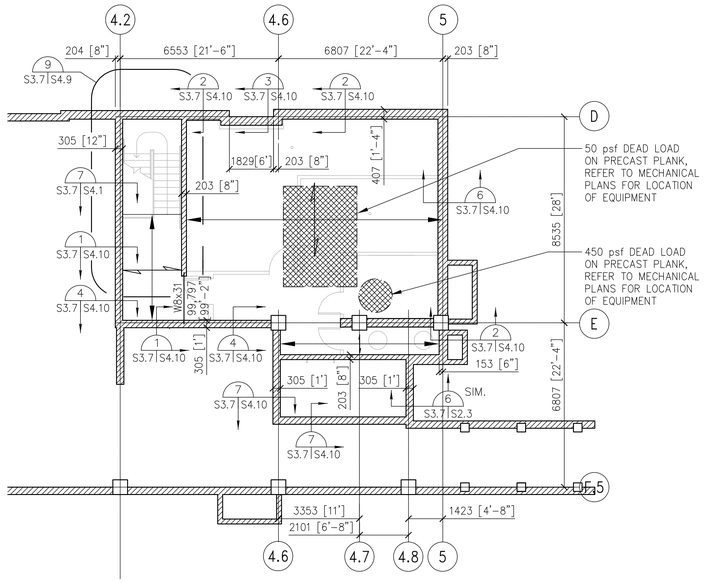

3A 1st FLOOR FRAMING PLAN
1:100

FRAMING PLAN GENERAL NOTES:

1. ALL 12" CMU REINFORCED WITH #5 BARS AT 24" O.C. EACH FACE VERTICAL AND LADDER TYPE REINFORCEMENT AT 16" O.C. UNLESS NOTED OTHERWISE.
2. ALL 8" CMU REINFORCED WITH #5 BARS AT 16" O.C. EACH FACE VERTICAL AND LADDER TYPE REINFORCEMENT AT 16" O.C. UNLESS NOTED OTHERWISE.
3. ALL CMU IS 12" UNLESS NOTED OTHERWISE.
4. ALL FLOORS 8" PRECAST HOLLOW CORE PLANK WITH 2" STRUCTURAL TOPPING. ALL ROOF PRECAST IS 8" HOLLOW CORE PLANK.
5. ( ) INDICATES THE SPAN DIRECTION OF THE PRECAST PLANK. PERPENDICULAR ARROW REPRESENTS EXTENT OF PLANK.
6. SUPERIMPOSED LOADS ON PRECAST FLOOR PLANK:
   TOPPING 25 PSF
   COLLATERAL 15 PSF
   LIVE LOAD 40 PSF

   SUPERIMPOSED LOADS ON PRECAST ROOF PLANK:
   DEAD LOAD 10 PSF
   SNOW 35 PSF
7. ALL ALL FLOOR PLANK TO HAVE SOLID GROUTED KEYWAYS AND ANY ADDITIONAL MECHANICAL CONNECTIONS BETWEEN PLANK REQUIRED TO MAINTAIN A MINIMUM NOMINAL SHEAR STRENGTH BETWEEN PLANK OF 1000 PLF.
8. ALL 2ND FLOOR TOP OF STEEL ELEVATIONS 103,251 (110'-8") U.N.O.
   ALL 3RD FLOOR TOP OF STEEL ELEVATIONS 106,502 (121'-4") U.N.O.
   ALL 4TH FLOOR TOP OF STEEL ELEVATIONS 109,754 (132'-0") U.N.O.
   ALL ROOF TOP OF STEEL ELEVATIONS 113,005 (142'-8") U.N.O.
9. ALL 2ND FLOOR PRECAST BEARING AT ELEVATION 103,048 (110'-0") U.N.O.
   ALL 3RD FLOOR PRECAST BEARING AT ELEVATION 106,299 (120'-8") U.N.O.
   ALL 4TH FLOOR PRECAST BEARING AT ELEVATION 109,550 (131'-4") U.N.O.
   ALL ROOF PRECAST BEARING AT ELEVATION 112,802 (142'-0") U.N.O.
10. SEE ARCHITECTURAL DRAWINGS FOR SCREEN WALL LOCATIONS, DETAILS AND BID OPION INFORMATION. SEE DETAILS 7/S2.4 AND 8/S2.4 FOR ADDITIONAL INFORMATION.
11. PROVIDE CLIP ANGLES ON THE SOUTH FACE OF THREE COLUMNS.
12. ALL BASEMENT WALLS TO BE REINFORCED WITH 16 [#5] BARS AT 610 o.c. EACH FACE.

FRAMING PLAN KEYED NOTES:

1. CMU WALL TO BE REINFORCED WITH #5 BARS AT 203 [8"] o.c. EACH FACE VERTICAL.
2. 1 1/2" 16 GAGE WIDE RIB ROOF DECK (MIN Sx = 0.41 in3/FT) TO BE CONTINUOUS OVER ALL FOUR SPANS. PROVIDE 5/8" PUDDLE WELDS AT 12" O.C. AT SUPPORTS AND (7) #10 TEK SCREWS AT SIDELAPS BETWEEN FRAMES.
3. PROVIDE 102 x 102 x 6 [4" x 4" x 1/4"] ANGLES WELDED TO COLUMN FOR PRECAST BEARING.
4. PROVIDE LINTEL PER DETAIL 9/S4.7 FOR WALL OPENINGS THAT PENETRATE BOND BEAMS AT PRECAST BEARING. TYPICAL AT ALL SUCH OPENINGS.
5. PROVIDE CONNECTION OF TS TO WALL PER DETAIL 15/S4.7.
6. SEE DETAIL 16/S4.7 FOR TS CONNECTION AT COLUMN.
7. SEE DETAIL 5/S4.8 FOR BEARING CONDITION.
8. CENTERLINE OF COLUMNS IS 102 [4"] WEST OF GRID "5".
9. SEE DETAIL 14/S4.8 FOR MECHANICAL PENATRATION OF BEAM.
10. SEE DETAIL 10/S4.9 FOR BALCONY FRAMING.

LINTEL SCHEDULE

OPENING SIZE	LINTEL SECT	LINTEL (UNLESS NOTED OTHERWISE)
≤4'-0"		203 [8"] BOND BEAM
≤7'-0"		(2) 203 [8"] BOND BEAMS
≤10'-0"	I	W8x24 WITH 279x6 [11"x1/4"] x CONTINUOUS MASONRY PLATE

LINTEL SCHEDULE NOTES:

1. PROVIDE LINTELS ABOVE ALL MASONRY OPENINGS PER THIS LINTEL SCHEDULE UNLESS NOTED OTHERWISE.
2. PROVIDE 89 x 89 x 10 [3 1/2" x 3 1/2" x 3/8"] BRICK LINTELS AT EXTERIOR MASONRY WALL OPENINGS. ANGLES TO BEAR ON A MINIMUM 203 [8"] OF BRICK ON EACH SIDE OF OPENING.
3. PROVIDE 279 x 6 [11" x 1/4"] x CONTINUOUS OR 178 x 6 [7" x 1/4"] x CONTINUOUS MASONRY PLATE AT BOTTOM OF ALL STEEL LINTELS AT 305 [12"] AND 203 [8"] MASONRY WALLS RESPECTIVELY.
4. COORDINATE WITH MECHANICAL CONTRACTOR FOR ADDITIONAL OPENING LOCATIONS AND SIZES.
5. ALL LINTELS TO HAVE A MINIMUM 203 [8"] BEARING ON SOLID GROUTED CMU.

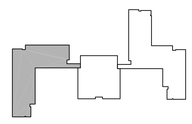

KEY PLAN

I hereby certify this drawing was prepared by me or under my direct supervision and that I am a duly registered architect under the laws of the State of Minnesota.

For: MEAD & HUNT, INC.

By:
Title: PROJECT MANAGER
Registration No: 22452

4000 2000 0 4000 8000

SCALE: 1 : 100

ALL SCALES SHOWN ARE BASED ON A STANDARD DRAWING SIZE OF 28" X 40" OR METRIC DRAWING SIZE OF 841mm X 594mm. IF ANY OTHER SIZE DRAWINGS ARE FURNISHED OR PLOTTED THE CONTRACTOR SHALL ADJUST THE SCALES ACCORDINGLY. THE CONTRACTOR SHALL ALSO ADVISE HIS SUB-CONTRACTORS OF THE ABOVE.

Revisions

Symbol	Descriptions	Date	Approved

Architect: ARCHITECTURAL ALLIANCE MINNEAPOLIS, MINNESOTA

Engineer: MEAD & HUNT MADISON, WISCONSIN

U.S. ARMY ENGINEER DISTRICT CORPS OF ENGINEERS OMAHA, NEBRASKA

Designed by: JMM
Drawn by: ACT/MJE
Checked by: TLK
Reviewed by: REC
Submitted by:

MINNEAPOLIS-ST.PAUL AFR — MINNESOTA

CONSOLIDATED LODGING FACILITY
- PHASE THREE -

1st AND 2nd FLOOR FRAMING PLANS

Plot Scale Ratio: 1: 1
Design File: 8785S307.DWG
Date: 2-14-2002
Sheet reference number:
Spec. No.: DACA 45-02-B-0008
Contract No.: DACA
Drawing Code: AF 721-315-03
S3.7

QJKL-990011P3

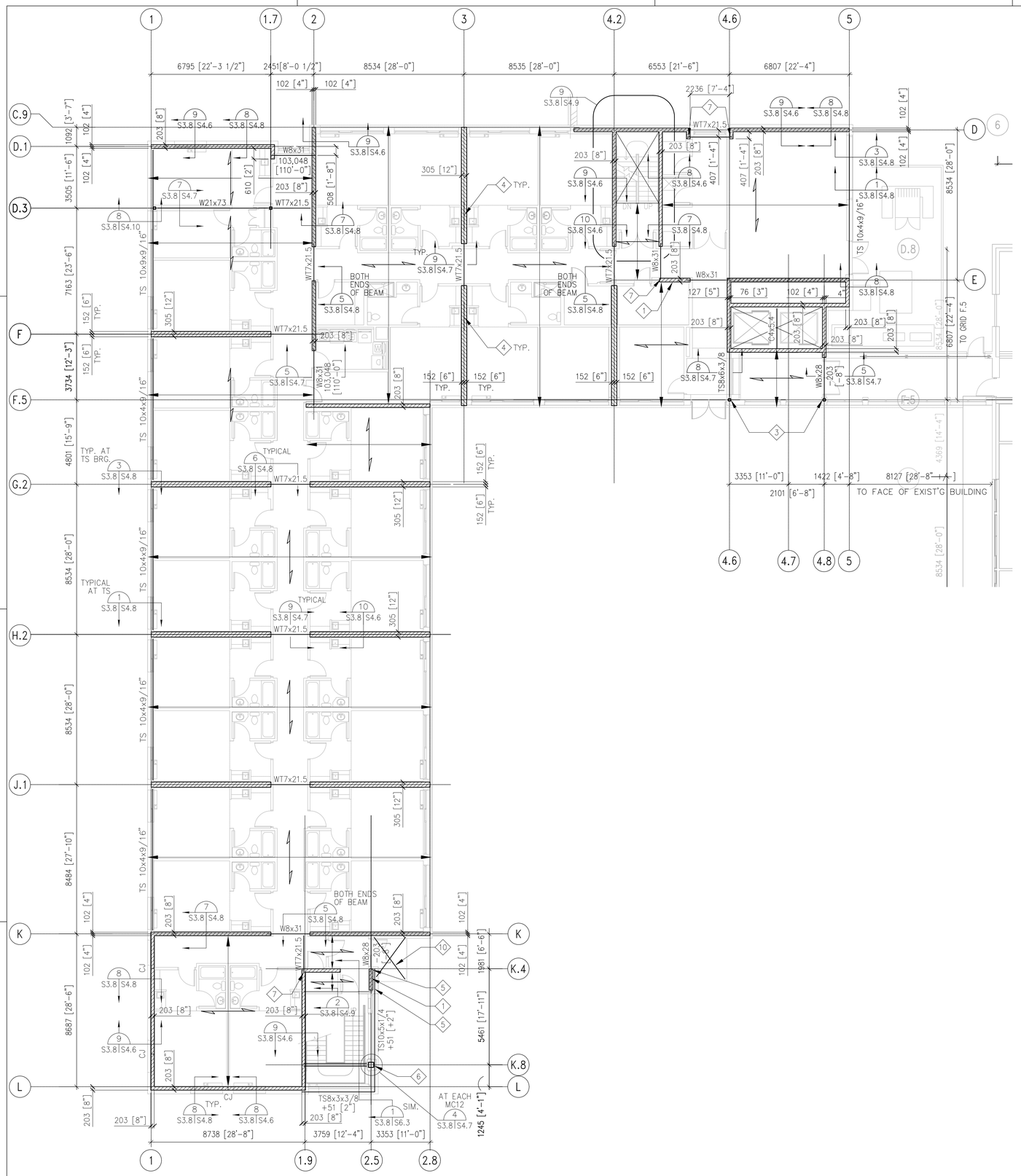

5A 3rd AND 4th FLOOR FRAMING PLAN
1:100

FRAMING PLAN GENERAL NOTES:

1. ALL 12" CMU REINFORCED WITH #5 BARS AT 24" O.C. EACH FACE VERTICAL AND LADDER TYPE REINFORCEMENT AT 16" O.C. UNLESS NOTED OTHERWISE.
2. ALL 8" CMU REINFORCED WITH #5 BARS AT 16" O.C. EACH FACE VERTICAL AND LADDER TYPE REINFORCEMENT AT 16" O.C. UNLESS NOTED OTHERWISE.
3. ALL CMU IS 12" UNLESS NOTED OTHERWISE.
4. ALL FLOORS 8" PRECAST HOLLOW CORE PLANK WITH 2" STRUCTURAL TOPPING. ALL ROOF PRECAST IS 8" HOLLOW CORE PLANK.
5. ( ) INDICATES THE SPAN DIRECTION OF THE PRECAST PLANK. PERPENDICULAR ARROW REPRESENTS EXTENT OF PLANK.
6. SUPERIMPOSED LOADS ON PRECAST FLOOR PLANK:
   TOPPING 25 PSF
   COLLATERAL 15 PSF
   LIVE LOAD 40 PSF

   SUPERIMPOSED LOADS ON PRECAST ROOF PLANK:
   DEAD LOAD 10 PSF
   SNOW 35 PSF
7. ALL ALL FLOOR PLANK TO HAVE SOLID GROUTED KEYWAYS AND ANY ADDITIONAL MECHANICAL CONNECTIONS BETWEEN PLANK REQUIRED TO MAINTAIN A MINIMUM NOMINAL SHEAR STRENGTH BETWEEN PLANK OF 1000 PLF.
8. ALL 2ND FLOOR TOP OF STEEL ELEVATIONS 103,251 (110'-8") U.N.O.
   ALL 3RD FLOOR TOP OF STEEL ELEVATIONS 106,502 (121'-4") U.N.O.
   ALL 4TH FLOOR TOP OF STEEL ELEVATIONS 109,754 (132'-0") U.N.O.
   ALL ROOF TOP OF STEEL ELEVATIONS 113,005 (142'-8") U.N.O.
9. ALL 2ND FLOOR PRECAST BEARING AT ELEVATION 103,048 (110'-0") U.N.O.
   ALL 3RD FLOOR PRECAST BEARING AT ELEVATION 106,299 (120'-8") U.N.O.
   ALL 4TH FLOOR PRECAST BEARING AT ELEVATION 109,550 (131'-4") U.N.O.
   ALL ROOF PRECAST BEARING AT ELEVATION 112,802 (142'-0") U.N.O.
10. SEE ARCHITECTURAL DRAWINGS FOR SCREEN WALL LOCATIONS, DETAILS AND BID OPION INFORMATION. SEE DETAILS 7/S2.4 AND 8/S2.4 FOR ADDITIONAL INFORMATION.
11. PROVIDE CLIP ANGLES ON THE SOUTH FACE OF THREE COLUMNS.
12. ALL BASEMENT WALLS TO BE REINFORCED WITH 16 [#5] BARS AT 610 o.c. EACH FACE.

FRAMING PLAN KEYED NOTES:

1. CMU WALL TO BE REINFORCED WITH #5 BARS AT 203 [8"] o.c. EACH FACE VERTICAL.
2. 1 1/2" 16 GAGE WIDE RIB ROOF DECK (MIN Sx = 0.41 in3/FT) TO BE CONTINUOUS OVER ALL FOUR SPANS. PROVIDE 5/8" PUDDLE WELDS AT 12" O.C. AT SUPPORTS AND (7) #10 TEK SCREWS AT SIDELAPS BETWEEN FRAMES.
3. PROVIDE 102 x 102 x 6 [4" x 4" x 1/4"] ANGLES WELDED TO COLUMN FOR PRECAST BEARING.
4. PROVIDE LINTEL PER DETAIL 9/S4.7 FOR WALL OPENINGS THAT PENETRATE BOND BEAMS AT PRECAST BEARING. TYPICAL AT ALL SUCH OPENINGS.
5. PROVIDE CONNECTION OF TS TO WALL PER DETAIL 15/S4.7.
6. SEE DETAIL 16/S4.7 FOR TS CONNECTION AT COLUMN.
7. SEE DETAIL 5/S4.8 FOR BEARING CONDITION.
8. CENTERLINE OF COLUMNS IS 102 [4"] EAST OF GRID "10".
9. SEE DETAIL 14/S4.8 FOR MECHANICAL PENATRATION OF BEAM.
10. SEE DETAIL 10/S4.9 FOR BALCONY FRAMING.

LINTEL SCHEDULE

OPENING SIZE	LINTEL SECT	LINTEL (UNLESS NOTED OTHERWISE)
≤4'-0"		203 [8"] BOND BEAM
≤7'-0"		(2) 203 [8"] BOND BEAMS
≤10'-0"	I	W8x24 WITH 279x6 [11"x1/4"] x CONTINUOUS MASONRY PLATE

LINTEL SCHEDULE NOTES:

1. PROVIDE LINTELS ABOVE ALL MASONRY OPENINGS PER THIS LINTEL SCHEDULE UNLESS NOTED OTHERWISE.
2. PROVIDE 89 x 89 x 10 [3 1/2" x 3 1/2" x 3/8"] BRICK LINTELS AT EXTERIOR MASONRY WALL OPENINGS. ANGLES TO BEAR ON A MINIMUM 203 [8"] OF BRICK ON EACH SIDE OF OPENING.
3. PROVIDE 279 x 6 [11" x 1/4"] x CONTINUOUS OR 178 x 6 [7" x 1/4"] x CONTINUOUS MASONRY PLATE AT BOTTOM OF ALL STEEL LINTELS AT 305 [12"] AND 203 [8"] MASONRY WALLS RESPECTIVELY.
4. COORDINATE WITH MECHANICAL CONTRACTOR FOR ADDITIONAL OPENING LOCATIONS AND SIZES.
5. ALL LINTELS TO HAVE A MINIMUM 203 [8"] BEARING ON SOLID GROUTED CMU.

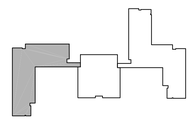

KEY PLAN

N

I hereby certify this drawing was prepared by me or under my direct supervision and that I am a duly registered architect under the laws of the State of Minnesota.

For: MEAD & HUNT, INC.

By:
Title: PROJECT MANAGER
Registration No: 22452

4000 2000 0 4000 8000

SCALE: 1 : 100

ALL SCALES SHOWN ARE BASED ON A STANDARD DRAWING SIZE OF 28" X 40" OR METRIC DRAWING SIZE OF 841mm X 594mm. IF ANY OTHER SIZE DRAWINGS ARE FURNISHED OR PLOTTED THE CONTRACTOR SHALL ADJUST THE SCALES ACCORDINGLY. THE CONTRACTOR SHALL ALSO ADVISE HIS SUB-CONTRACTORS OF THE ABOVE.

Revisions

Symbol	Descriptions	Date	Approved

Architect: ARCHITECTURAL ALLIANCE MINNEAPOLIS, MINNESOTA

Engineer: MEAD & HUNT MADISON, WISCONSIN

U.S. ARMY ENGINEER DISTRICT CORPS OF ENGINEERS OMAHA, NEBRASKA

Designed by: JMM
Drawn by: ACT/MJE
Checked by: TLK
Reviewed by: REC
Submitted by:

MINNEAPOLIS-ST.PAUL AFR MINNESOTA

CONSOLIDATED LODGING FACILITY
- PHASE THREE -

3rd AND 4th FLOOR FRAMING PLANS

Plot Scale Ratio: 1: 1
Design File: 8785S308.DWG
Date: 2-14-2002
Sheet reference number: S3.8
Spec. No.: DACA 45-02-B-0008
Drawing Code: AF 721-315-03
Contract No.: DACA

QJKL-990011P3

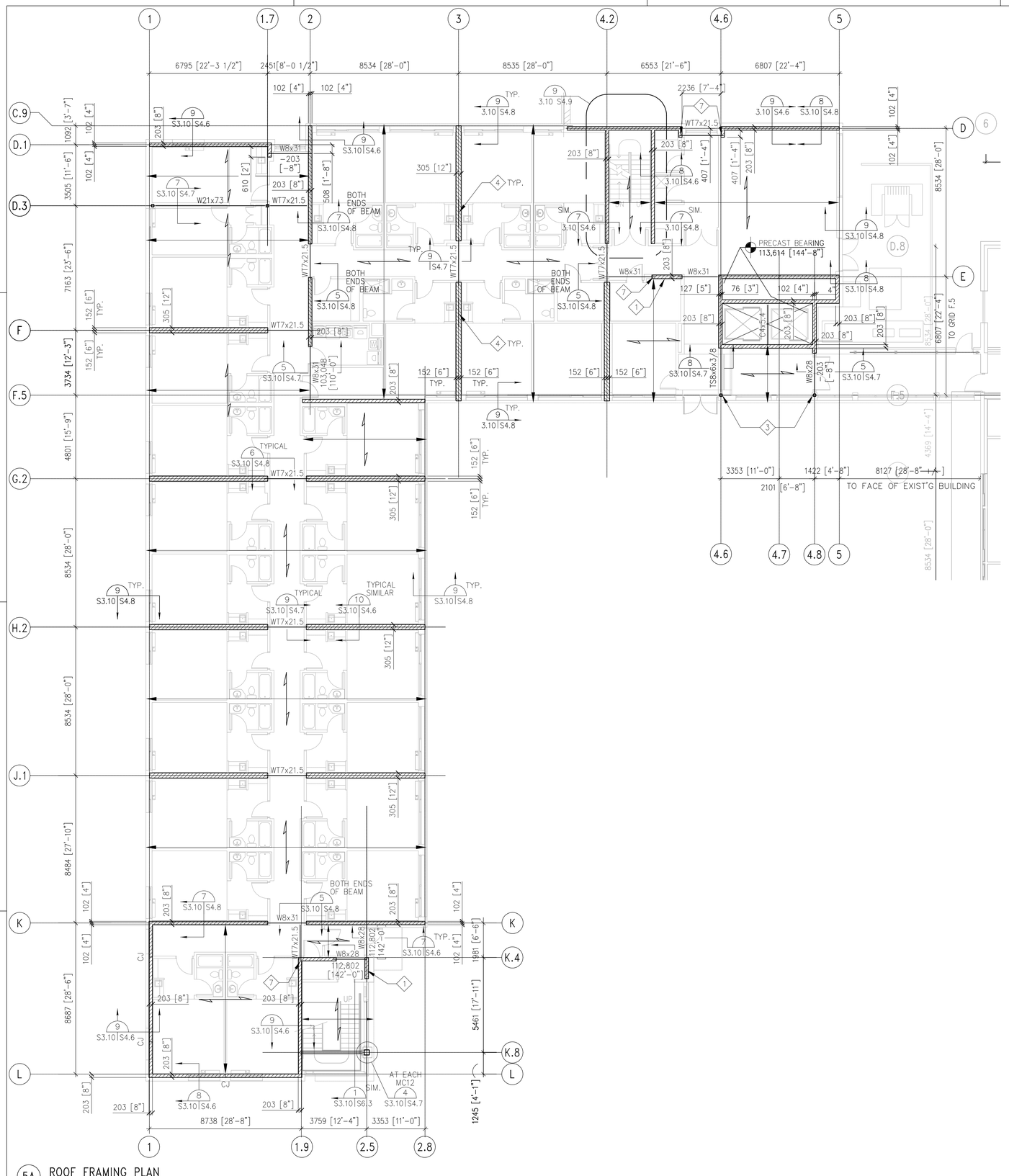

5A ROOF FRAMING PLAN
1:100

FRAMING PLAN GENERAL NOTES:

1. ALL 12" CMU REINFORCED WITH #5 BARS AT 24" O.C. EACH FACE VERTICAL AND LADDER TYPE REINFORCEMENT AT 16" O.C. UNLESS NOTED OTHERWISE.
2. ALL 8" CMU REINFORCED WITH #5 BARS AT 16" O.C. EACH FACE VERTICAL AND LADDER TYPE REINFORCEMENT AT 16" O.C. UNLESS NOTED OTHERWISE.
3. ALL CMU IS 12" UNLESS NOTED OTHERWISE.
4. ALL FLOORS 8" PRECAST HOLLOW CORE PLANK WITH 2" STRUCTURAL TOPPING. ALL ROOF PRECAST IS 8" HOLLOW CORE PLANK.
5. ( ) INDICATES THE SPAN DIRECTION OF THE PRECAST PLANK. PERPENDICULAR ARROW REPRESENTS EXTENT OF PLANK.
6. SUPERIMPOSED LOADS ON PRECAST FLOOR PLANK:
   TOPPING 25 PSF
   COLLATERAL 15 PSF
   LIVE LOAD 40 PSF

   SUPERIMPOSED LOADS ON PRECAST ROOF PLANK:
   DEAD LOAD 10 PSF
   SNOW 35 PSF
7. ALL ALL FLOOR PLANK TO HAVE SOLID GROUTED KEYWAYS AND ANY ADDITIONAL MECHANICAL CONNECTIONS BETWEEN PLANK REQUIRED TO MAINTAIN A MINIMUM NOMINAL SHEAR STRENGTH BETWEEN PLANK OF 1000 PLF.
8. ALL 2ND FLOOR TOP OF STEEL ELEVATIONS 103,251 (110'-8") U.N.O.
   ALL 3RD FLOOR TOP OF STEEL ELEVATIONS 106,502 (121'-4") U.N.O.
   ALL 4TH FLOOR TOP OF STEEL ELEVATIONS 109,754 (132'-0") U.N.O.
   ALL ROOF TOP OF STEEL ELEVATIONS 113,005 (142'-8") U.N.O.
9. ALL 2ND FLOOR PRECAST BEARING AT ELEVATION 103,048 (110'-0") U.N.O.
   ALL 3RD FLOOR PRECAST BEARING AT ELEVATION 106,299 (120'-8") U.N.O.
   ALL 4TH FLOOR PRECAST BEARING AT ELEVATION 109,550 (131'-4") U.N.O.
   ALL ROOF PRECAST BEARING AT ELEVATION 112,802 (142'-0") U.N.O.
10. SEE ARCHITECTURAL DRAWINGS FOR SCREEN WALL LOCATIONS, DETAILS AND BID OPION INFORMATION. SEE DETAILS 7/S2.4 AND 8/S2.4 FOR ADDITIONAL INFORMATION.
11. PROVIDE CLIP ANGLES ON THE SOUTH FACE OF THREE COLUMNS.
12. ALL BASEMENT WALLS TO BE REINFORCED WITH 16 [#5] BARS AT 610 o.c. EACH FACE.

FRAMING PLAN KEYED NOTES:

1. CMU WALL TO BE REINFORCED WITH #5 BARS AT 203 [8"] o.c. EACH FACE VERTICAL.
2. 1 1/2" 16 GAGE WIDE RIB ROOF DECK (MIN Sx = 0.41 in3/FT) TO BE CONTINUOUS OVER ALL FOUR SPANS. PROVIDE 5/8" PUDDLE WELDS AT 12" O.C. AT SUPPORTS AND (7) #10 TEK SCREWS AT SIDELAPS BETWEEN FRAMES.
3. PROVIDE 102 x 102 x 6 [4" x 4" x 1/4"] ANGLES WELDED TO COLUMN FOR PRECAST BEARING.
4. PROVIDE LINTEL PER DETAIL 9/S4.7 FOR WALL OPENINGS THAT PENETRATE BOND BEAMS AT PRECAST BEARING. TYPICAL AT ALL SUCH OPENINGS.
5. PROVIDE CONNECTION OF TS TO WALL PER DETAIL 15/S4.7.
6. SEE DETAIL 16/S4.7 FOR TS CONNECTION AT COLUMN.
7. SEE DETAIL 5/S4.8 FOR BEARING CONDITION.
8. CENTERLINE OF COLUMNS IS 102 [4"] EAST OF GRID "10".
9. SEE DETAIL 14/S4.8 FOR MECHANICAL PENATRATION OF BEAM.
10. SEE DETAIL 10/S4.9 FOR BALCONY FRAMING.

LINTEL SCHEDULE

OPENING SIZE	LINTEL SECT	LINTEL (UNLESS NOTED OTHERWISE)
≤4'-0"		203 [8"] BOND BEAM
≤7'-0"		(2) 203 [8"] BOND BEAMS
≤10'-0"	I	W8x24 WITH 279x6 [11"x1/4"] x CONTINUOUS MASONRY PLATE

LINTEL SCHEDULE NOTES:

1. PROVIDE LINTELS ABOVE ALL MASONRY OPENINGS PER THIS LINTEL SCHEDULE UNLESS NOTED OTHERWISE.
2. PROVIDE 89 x 89 x 10 [3 1/2" x 3 1/2" x 3/8"] BRICK LINTELS AT EXTERIOR MASONRY WALL OPENINGS. ANGLES TO BEAR ON A MINIMUM 203 [8"] OF BRICK ON EACH SIDE OF OPENING.
3. PROVIDE 279 x 6 [11" x 1/4"] x CONTINUOUS OR 178 x 6 [7" x 1/4"] x CONTINUOUS MASONRY PLATE AT BOTTOM OF ALL STEEL LINTELS AT 305 [12"] AND 203 [8"] MASONRY WALLS RESPECTIVELY.
4. COORDINATE WITH MECHANICAL CONTRACTOR FOR ADDITIONAL OPENING LOCATIONS AND SIZES.
5. ALL LINTELS TO HAVE A MINIMUM 203 [8"] BEARING ON SOLID GROUTED CMU.

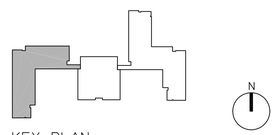

KEY PLAN

I hereby certify this drawing was prepared by me or under my direct supervision and that I am a duly registered architect under the laws of the State of Minnesota.

For: MEAD & HUNT, INC.

By:
Title: PROJECT MANAGER
Registration No: 22452

4000 2000 0 4000 8000

SCALE: 1 : 100

ALL SCALES SHOWN ARE BASED ON A STANDARD DRAWING SIZE OF 28" X 40" OR METRIC DRAWING SIZE OF 841mm X 594mm. IF ANY OTHER SIZE DRAWINGS ARE FURNISHED OR PLOTTED THE CONTRACTOR SHALL ADJUST THE SCALES ACCORDINGLY. THE CONTRACTOR SHALL ALSO ADVISE HIS SUB-CONTRACTORS OF THE ABOVE.

Revisions

Symbol	Descriptions	Date	Approved

Architect: ARCHITECTURAL ALLIANCE MINNEAPOLIS, MINNESOTA

Engineer: MEAD & HUNT MADISON, WISCONSIN

U.S. ARMY ENGINEER DISTRICT CORPS OF ENGINEERS OMAHA, NEBRASKA

MINNEAPOLIS-ST.PAUL AFR MINNESOTA

CONSOLIDATED LODGING FACILITY
- PHASE THREE -

ROOF FRAMING PLAN

Designed by: JMM
Drawn by: ACT/MJE
Checked by: TLK
Reviewed by: REC
Submitted by:

Plot Scale Ratio: 1: 1
Design File: 8785S310.DWG
Date: 2-14-2002
Spec. No.: DACA 45-02-B-0008
Contract No.: DACA
Drawing Code: AF 721-315-03
Sheet reference number: S3.10

QJKL-990011P3

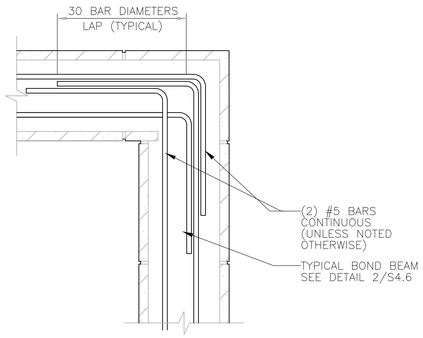

12 TYP. | S4.6 TYPICAL BOND BEAM INTERSECTION NO SCALE

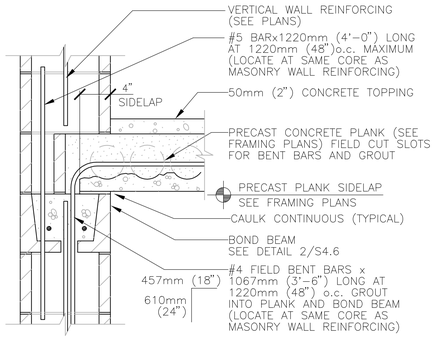

8 PS2 | S4.6 PRECAST FLOOR PLANK SIDELAP AT HIGHER MASONRY WALL NO SCALE

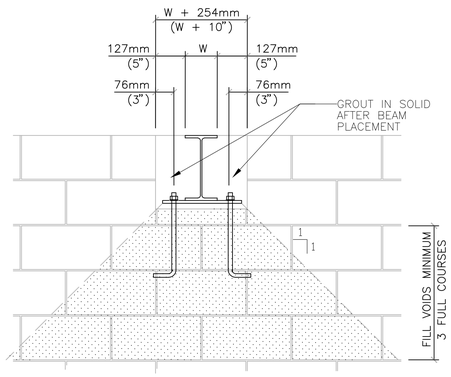

5 TYP. | S4.6 TYPICAL BEAM BEARING AT MASONRY WALL NO SCALE

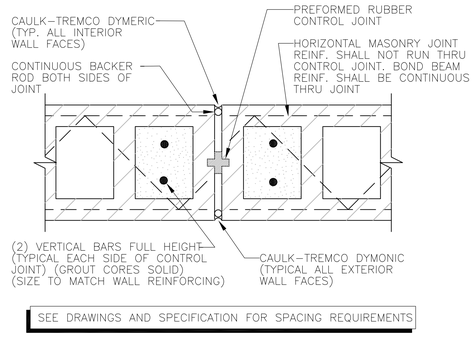

1 TYP. | S4.6 TYPICAL MASONRY CONTROL JOINT NO SCALE

MULTI-SHEET REFERENCE LEGEND

X | X DETAIL TITLE

PS1 = PLAN SHEETS: S3.5, S3.6

PS2 = PLAN SHEETS: S3.7, S3.8, S3.10

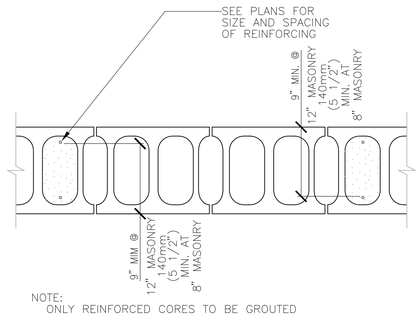

13 TYP. | S4.6 TYPICAL BAR PLACEMENT IN MASONRY CORE NO SCALE

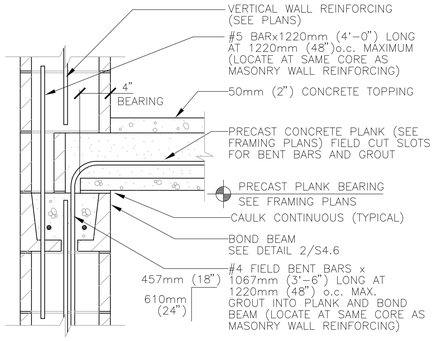

9 PS2 | S4.6 PRECAST FLOOR PLANK BEARING AT HIGHER MASONRY WALL NO SCALE

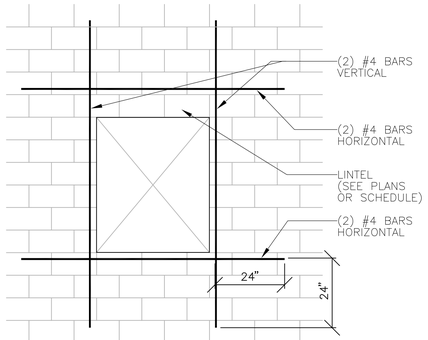

NOTE:
IN ADDITION TO OPENINGS SHOWN ON THE DRAWINGS, MASONRY AND STEEL WORK SHALL INCLUDE PROVIDING MASONRY WALL OPENINGS AND ASSOCIATED LINTELS REQUIRED FOR MECHANICAL/ELECTRICAL EQUIPMENT (OTHER THAN INDIVIDUAL PIPE PENETRATIONS FIELD DRILLED BY THE APPROPRIATE TRADES DURING THEIR WORK), INCLUDING COORDINATING WITH OTHER TRADES, GENERAL CONTRACTOR, ARCHITECT/ENGINEER, AND FINAL MECHANICAL AND ELECTRICAL DRAWINGS TO VERIFY EXACT SIZES AND LOCATIONS OF ALL SUCH OPENINGS AS WORK PROGRESSES. FINAL SIZES MAY NOT BE AVAILABLE UNTIL EQUIPMENT SHOP DRAWINGS ARE RECEIVED FROM SUCCESSFUL BIDDERS. ALL PARTIES SHOULD BE PREPARED TO PLAN AND COOPERATE ACCORDINGLY TO AVOID UNNECESSARY DELAYS IN THE WORK.

6 TYP. | S4.6 MASONRY OPENING REINFORCEMENT NO SCALE

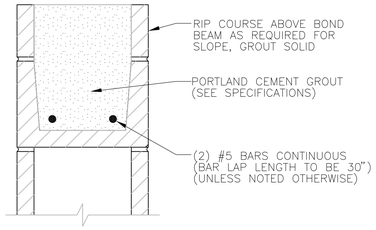

2 TYP. | S4.6 TYPICAL MASONRY BOND BEAM NO SCALE

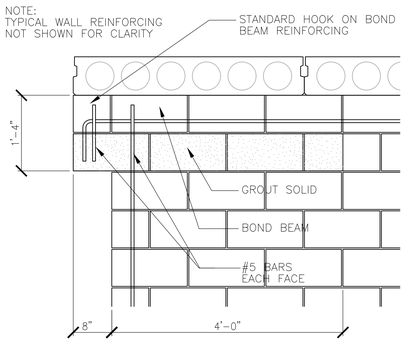

14 S3.7 | S4.6 BEARING WALL BELOW SECOND FLOOR NO SCALE

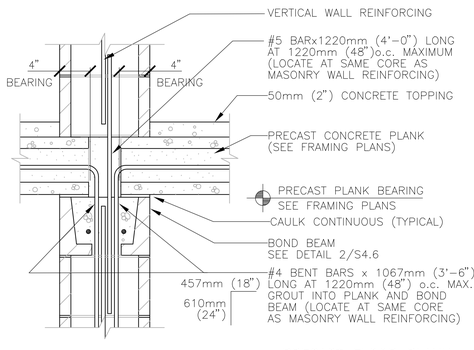

10 PS2 | S4.6 PRECAST FLOOR PLANK BEARING AT HIGHER MASONRY WALL BOTH SIDES NO SCALE

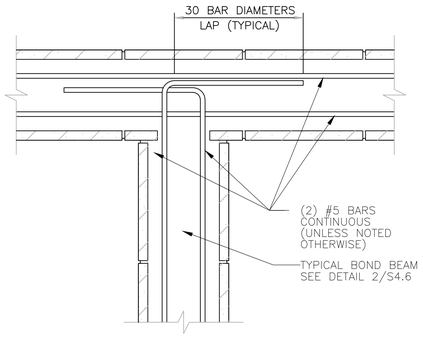

3 TYP. | S4.6 TYPICAL BOND BEAM INTERSECTION NO SCALE

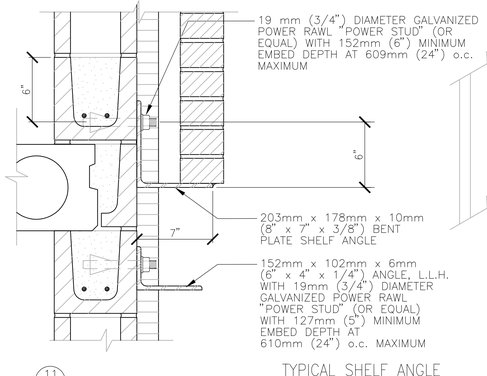

11 S3.3 | S4.6 TYPICAL SHELF ANGLE NO SCALE

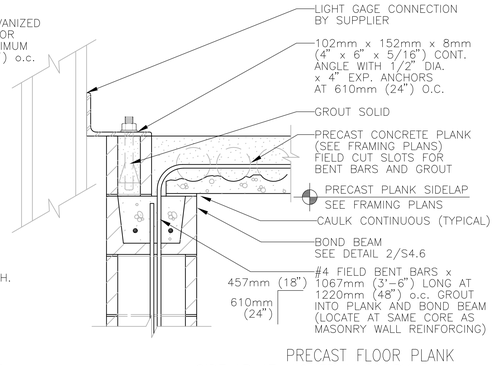

7 PS2 | S4.6 PRECAST FLOOR PLANK SIDELAP AT HIGHER MASONRY WALL NO SCALE

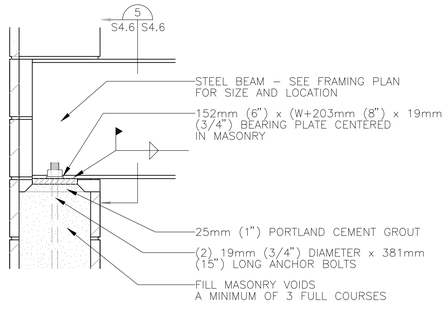

4 TYP. | S4.6 TYPICAL BEAM BEARING AT MASONRY WALL NO SCALE

I hereby certify this drawing was prepared by me or under my direct supervision and that I am a duly registered architect under the laws of the State of Minnesota.

For: MEAD & HUNT, INC.

By:
Title: PROJECT MANAGER
Registration No: 22452

ALL SCALES SHOWN ARE BASED ON A STANDARD DRAWING SIZE OF 28" X 40" OR METRIC DRAWING SIZE OF 841mm X 594mm. IF ANY OTHER SIZE DRAWINGS ARE FURNISHED OR PLOTTED THE CONTRACTOR SHALL ADJUST THE SCALES ACCORDINGLY. THE CONTRACTOR SHALL ALSO ADVISE HIS SUB-CONTRACTORS OF THE ABOVE.

Revisions

Symbol	Descriptions	Date	Approved

Architect: ARCHITECTURAL ALLIANCE MINNEAPOLIS, MINNESOTA

Engineer: MEAD & HUNT MADISON, WISCONSIN

U.S. ARMY ENGINEER DISTRICT CORPS OF ENGINEERS OMAHA, NEBRASKA

MINNEAPOLIS-ST.PAUL AFR MINNESOTA

CONSOLIDATED LODGING FACILITY
- PHASE THREE -

STRUCTURAL DETAILS

Designed by: JMM
Drawn by: ACT
Checked by: TLK
Reviewed by: REC
Submitted by:

Plot Scale Ratio: 1: 1
Design File: 8785S406.DWG
Date: 2-14-2002
Spec. No.: DACA 45-02-B-0008
Contract No.: DACA
Drawing Code: AF 721-315-03
Sheet reference number: S4.6

QJKL-990011P3

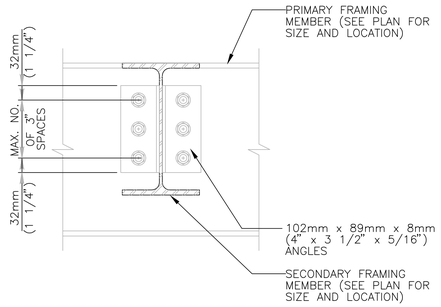

13 TYP | S4.7 TYPICAL BEAM/BEAM CONNECTION DETAIL NO SCALE

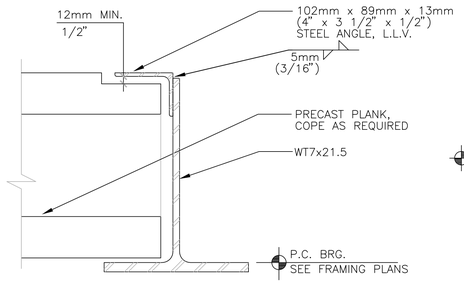

9 PS2 | S4.7 PRECAST BEARING ON STEEL TEE NO SCALE

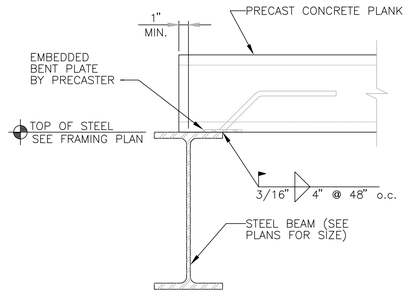

5 PS2 | S4.7 PRECAST BEARING ON STEEL BEAM NO SCALE

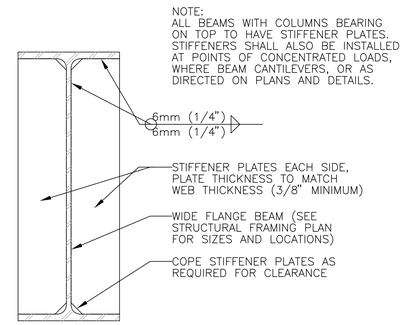

1 TYP | S4.7 TYPICAL BEAM STIFFENER PLATE NO SCALE

MULTI-SHEET REFERENCE LEGEND

X / X — DETAIL TITLE

PS2 = PLAN SHEETS: S3.7, S3.8, S3.10

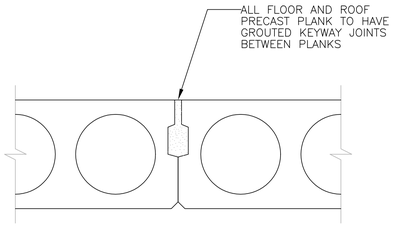

14 TYP | S4.7 TYPICAL PRECAST KEYWAY DETAIL NO SCALE

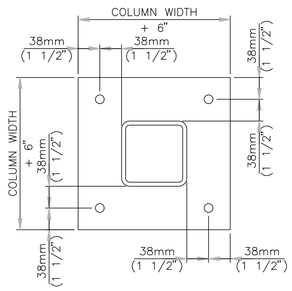

10 TYP | S4.7 COLUMN BASE PLATE AT FOUNDATION PIERS NO SCALE

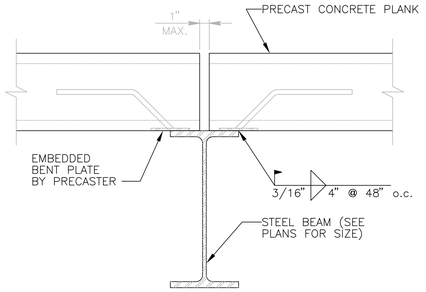

6 PS2 | S4.7 PRECAST BEARING ON STEEL BEAM NO SCALE

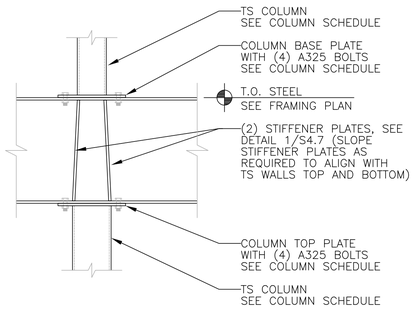

2 TYP | S4.7 BEAM STIFFENER PLATE AT COLUMNS NO SCALE

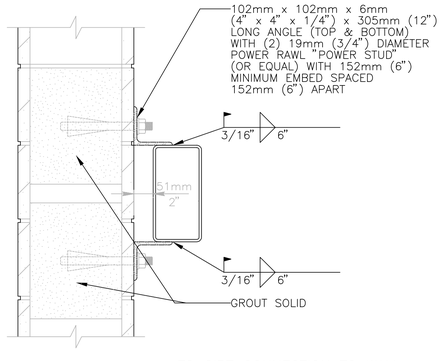

15 PS1 | S4.7 TS GIRT CONNECTION TO WALL NO SCALE

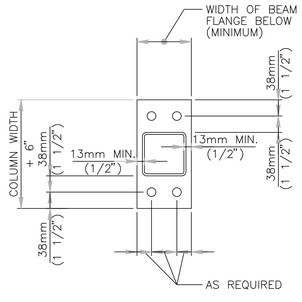

11 TYP | S4.7 COLUMN BASE PLATE AT BEAM NO SCALE

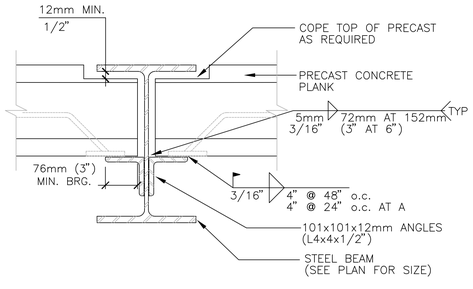

7 7A S3.7 | S4.7 PRECAST BEARING ON STEEL BEAM NO SCALE

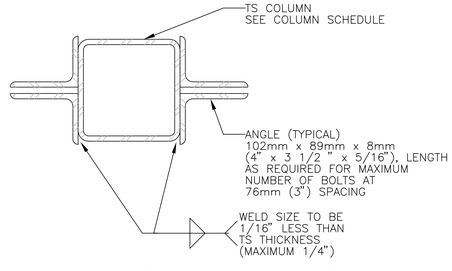

3 PS2 | S4.7 TYPICAL BEAM CONNECTION AT TUBE COLUMN NO SCALE

I hereby certify this drawing was prepared by me or under my direct supervision and that I am a duly registered architect under the laws of the State of Minnesota.

For: MEAD & HUNT, INC.

By:
Title: PROJECT MANAGER
Registration No: 22452

ALL SCALES SHOWN ARE BASED ON A STANDARD DRAWING SIZE OF 28" X 40" OR METRIC DRAWING SIZE OF 841mm X 594mm. IF ANY OTHER SIZE DRAWINGS ARE FURNISHED OR PLOTTED THE CONTRACTOR SHALL ADJUST THE SCALES ACCORDINGLY. THE CONTRACTOR SHALL ALSO ADVISE HIS SUB-CONTRACTORS OF THE ABOVE.

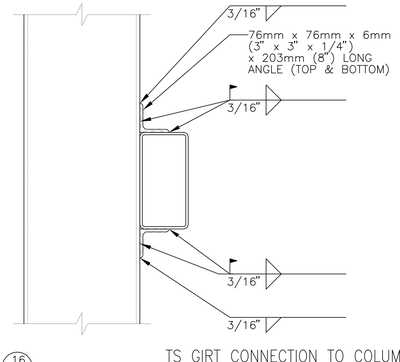

16 PS2 | S4.7 TS GIRT CONNECTION TO COLUMN NO SCALE

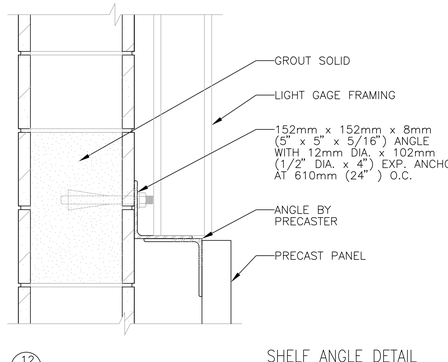

12 S3.7 | S4.7 SHELF ANGLE DETAIL NO SCALE

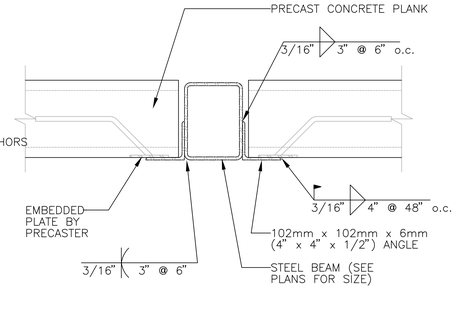

8 PS2 | S4.7 PRECAST BEARING ON STEEL BEAM NO SCALE

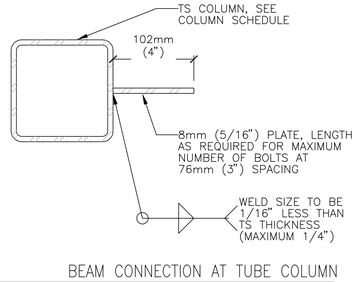

4 PS2 | S4.7 BEAM CONNECTION AT TUBE COLUMN NO SCALE

Revisions

Symbol	Descriptions	Date	Approved

Architect: ARCHITECTURAL ALLIANCE MINNEAPOLIS, MINNESOTA

Engineer: MEAD & HUNT MADISON, WISCONSIN

U.S. ARMY ENGINEER DISTRICT CORPS OF ENGINEERS OMAHA, NEBRASKA

MINNEAPOLIS-ST.PAUL AFR — MINNESOTA

CONSOLIDATED LODGING FACILITY – PHASE THREE –

STRUCTURAL DETAILS

Designed by: JMM
Drawn by: ACT
Checked by: TLK
Reviewed by: REC
Submitted by:

Plot Scale Ratio: 1: 1
Design File: 8785S407.DWG
Date: 2-14-2002
Spec. No.: DACA 45-02-B-0008
Contract No.: DACA
Drawing Code: AF 721-315-03
Sheet reference number: S4.7

QJKL-990011P3

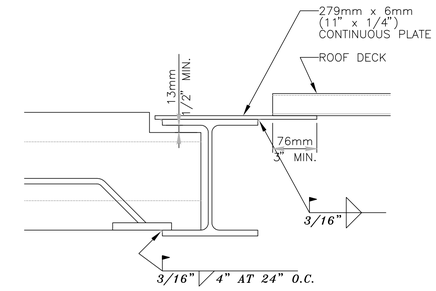

13 S3.7|S4.8 PRECAST PLANK & ROOF DECK BEARING AT BEAM
NO SCALE

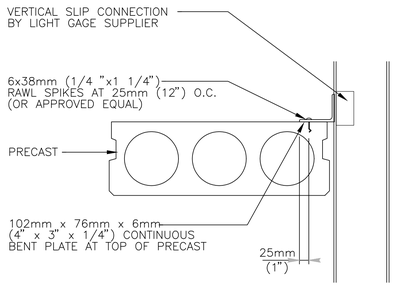

9 S3.6|S4.8 PRECAST/STUD WALL CONNECTION DETAIL
NO SCALE

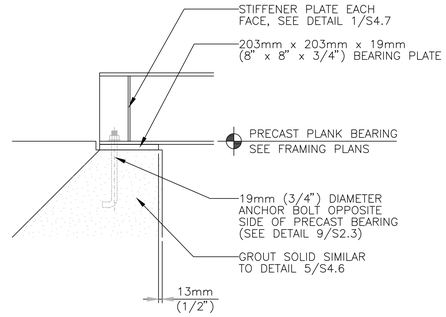

5 PS2|S4.8 BEAM BEARING DETAIL
NO SCALE

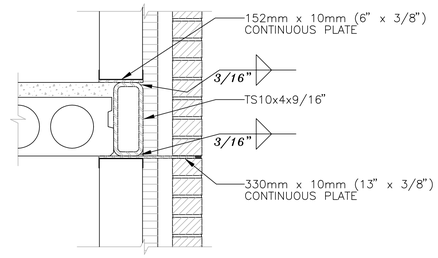

1 S3.7|S4.8 S3.8 TYPICAL BRICK SUPPORT BEAM DETAIL
NO SCALE

MULTI-SHEET REFERENCE LEGEND

FRAMING DETAILS GENERAL NOTES

1. THE HORIZONTAL LEG OF THE ANGLE SUPPORTING THE WIND GIRT AT THE FIRST FLOOR WINDOW HEADS CAN BE CUT BACK AND REMOVED TO CORRECT THEIR INTERFERENCE WITH THE FINISHED ROOM SPACE. THE WALL FURRING PROVIDED BY THE CONTRACT WILL COVER THE VERTICAL LEG.

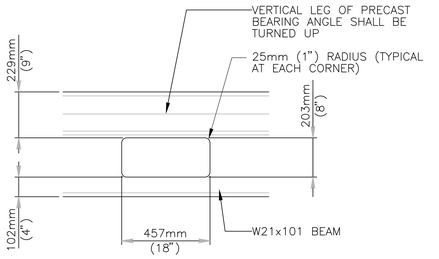

NOTE: PENETRATION MUST BE AT CENTER OF BEAM SPAN

14 S3.7|S4.8 MECHANICAL PENETRATION AT BEAM
NO SCALE

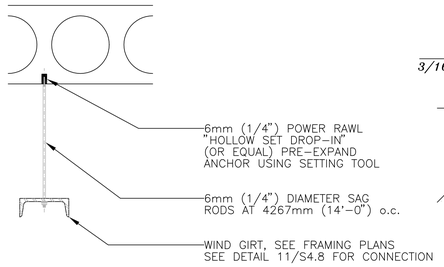

10 S3.7|S4.8 SAG ROD DETAIL
NO SCALE

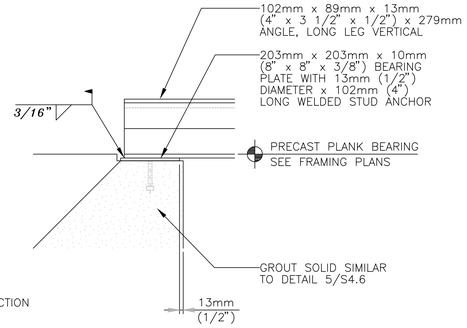

6 PS2|S4.8 TYPICAL CORRIDOR BEAM BEARING DETAIL
NO SCALE

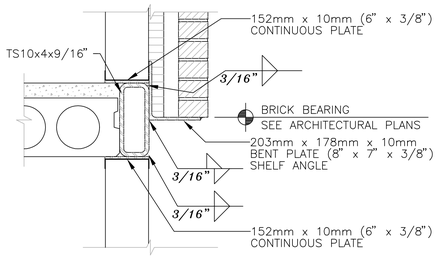

2 S3.7|S4.8 BRICK SUPPORT BEAM DETAIL
NO SCALE

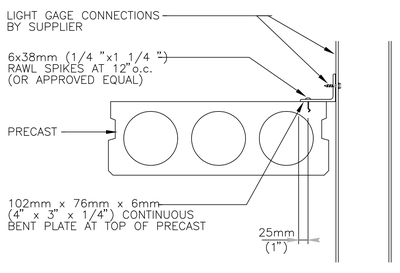

15 PS1|S4.8 PRECAST/STUD WALL CONNECTION DETAIL
NO SCALE

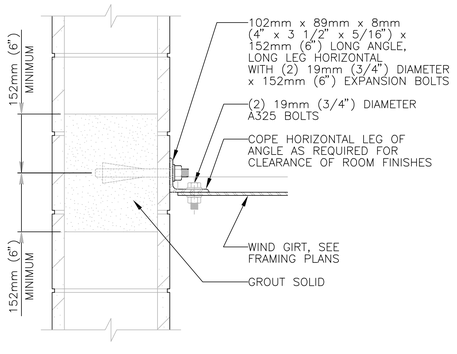

11 S3.7|S4.8 WIND GIRT CONNECTION DETAIL
NO SCALE

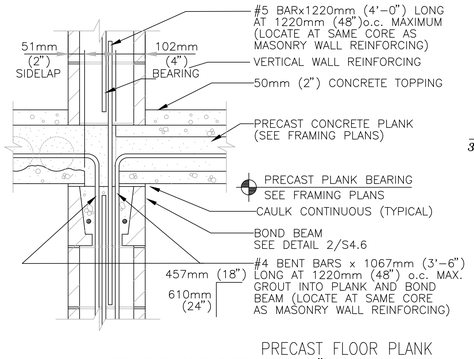

PRECAST FLOOR PLANK
BEARING AND SIDELAP AT 8" MASONRY WALL
7 PS2|S4.8
NO SCALE

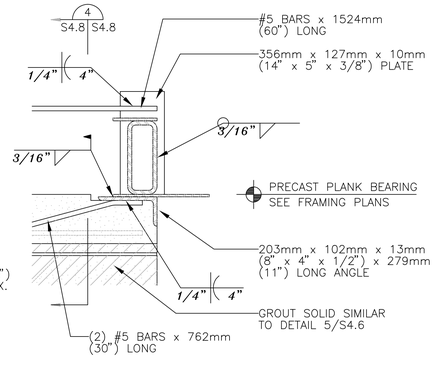

3 PS1|S4.8 TYPICAL BRICK SUPPORT BEAM BEARING DETAIL
NO SCALE

I hereby certify this drawing was prepared by me or under my direct supervision and that I am a duly registered architect under the laws of the State of Minnesota.

For: MEAD & HUNT, INC.

By:
Title:PROJECT MANAGER
Registration No:22452

ALL SCALES SHOWN ARE BASED ON A STANDARD DRAWING SIZE OF 28" X 40" OR METRIC DRAWING SIZE OF 841mm X 594mm. IF ANY OTHER SIZE DRAWINGS ARE FURNISHED OR PLOTTED THE CONTRACTOR SHALL ADJUST THE SCALES ACCORDINGLY. THE CONTRACTOR SHALL ALSO ADVISE HIS SUB-CONTRACTORS OF THE ABOVE.

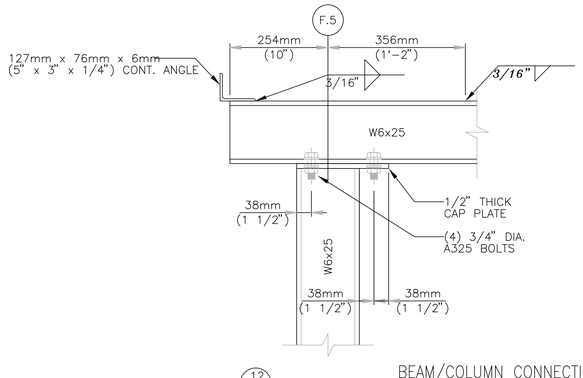

12 S3.7|S4.8 BEAM/COLUMN CONNECTION DETAIL
NO SCALE

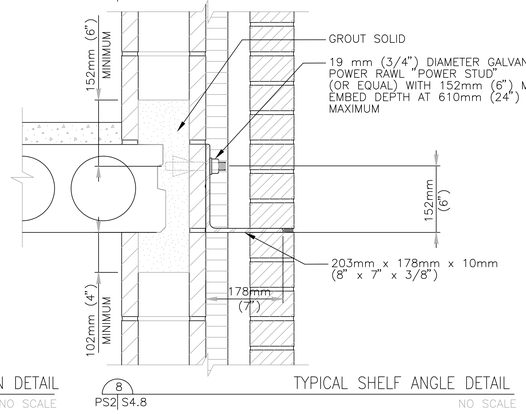

8 PS2|S4.8 TYPICAL SHELF ANGLE DETAIL
NO SCALE

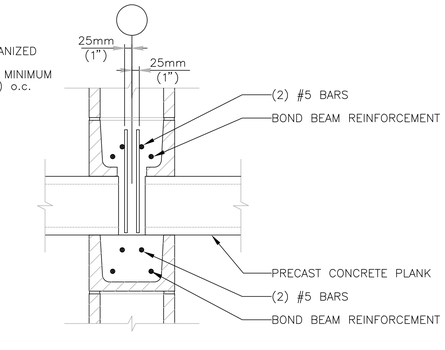

4 TYP.|S4.8 TYPICAL BRICK SUPPORT BEAM BEARING DETAIL
NO SCALE

Revisions			
Symbol	Descriptions	Date	Approved

Architect: ARCHITECTURAL ALLIANCE MINNEAPOLIS, MINNESOTA	Engineer: MEAD & HUNT MADISON, WISCONSIN	U.S. ARMY ENGINEER DISTRICT CORPS OF ENGINEERS OMAHA, NEBRASKA

Designed by: JMM
Drawn by: ACT
Checked by: TLK
Reviewed by: REC
Submitted by:

MINNEAPOLIS-ST.PAUL AFR — MINNESOTA

CONSOLIDATED LODGING FACILITY
– PHASE THREE –

STRUCTURAL DETAILS

Plot Scale Ratio: 1: 1
Design File: 8785S408.DWG
Date: 2-14-2002
Sheet reference number:
Spec. No.: DACA 45-02-B-0008
Drawing Code: AF 721-315-03
Contract No.: DACA
S4.8

QJKL-990011P3

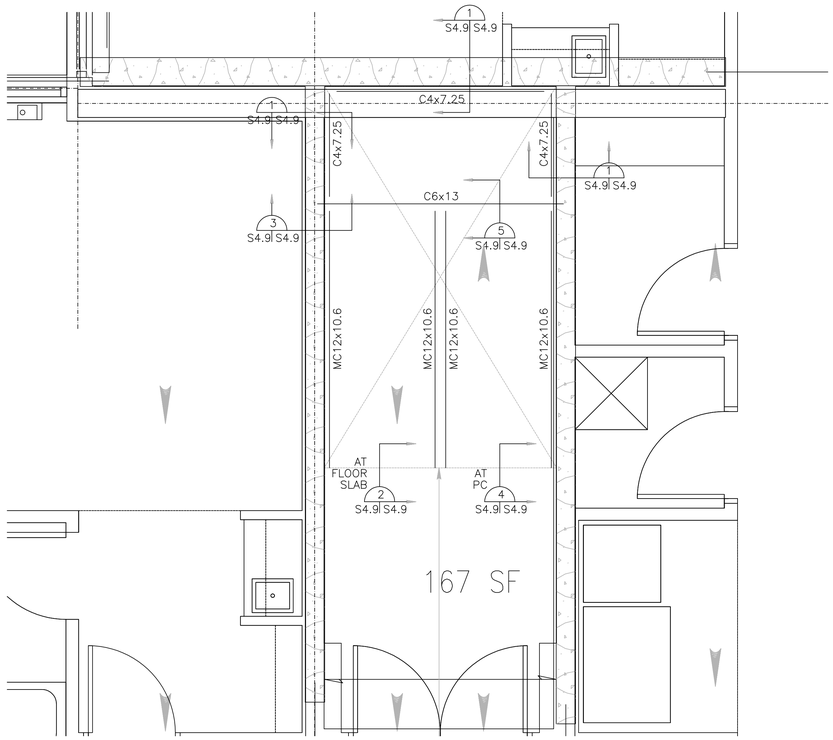

9 S3.7 | S4.9 S3.8 ENLARGED STAIR FRAMING PLAN 1:50

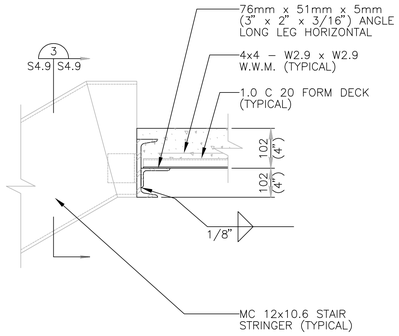

5 S4.9 | S4.9 STAIR FRAMING/LANDING DETAIL NO SCALE

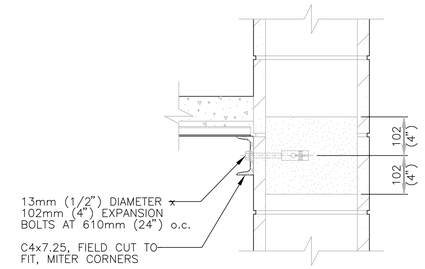

1 S4.9 | S4.9 STAIR LANDING DETAIL NO SCALE

MULTI–SHEET REFERENCE LEGEND

X | X DETAIL TITLE

PS1 = PLAN SHEETS: S3.5, S3.6

PS2 = PLAN SHEETS: S3.7, S3.8, S3.10

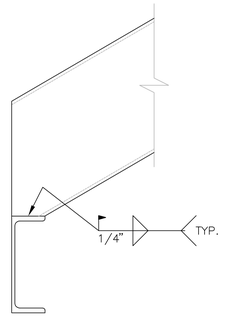

6 S6.3 | S4.9 STAIR FRAMING/LANDING DETAIL NO SCALE

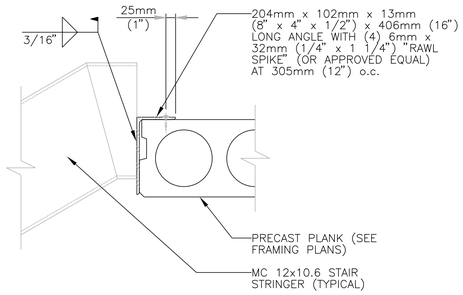

2 S4.9 | S4.9 STRINGER BEARING ON PRECAST PLANK NO SCALE

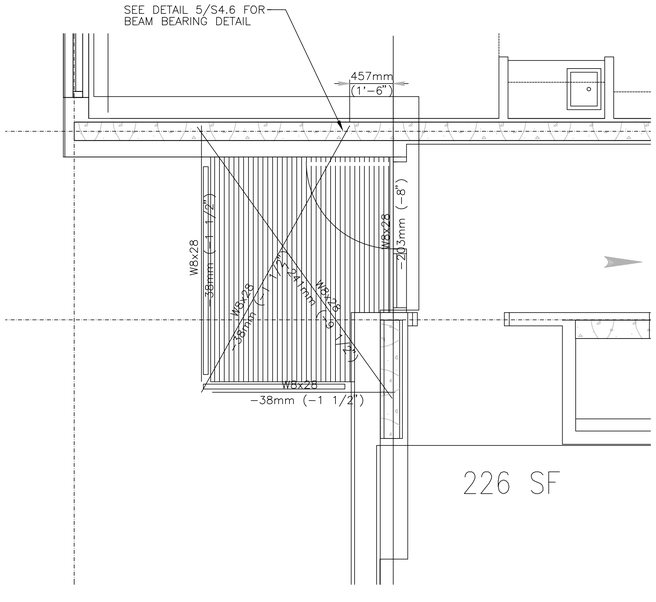

10 S3.7 | S4.9 S3.8 ENLARGED BALCONY FRAMING PLAN 1:50

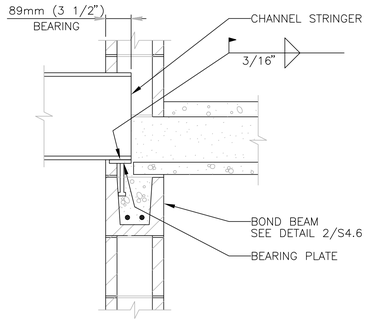

7 S6.3 | S4.9 STAIR FRAMING/LANDING DETAIL NO SCALE

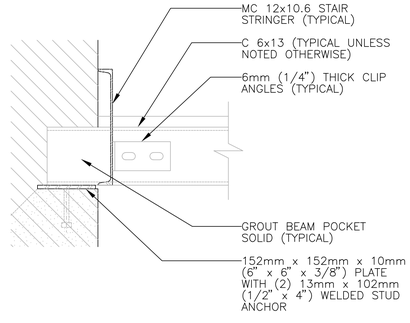

3 S4.9 | S4.9 STAIR FRAMING DETAIL NO SCALE

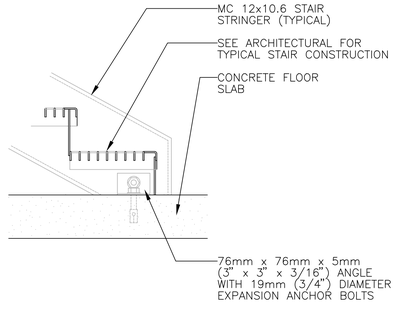

4 S4.9 | S4.9 STEEL STRINGER BASE DETAIL NO SCALE

I hereby certify this drawing was prepared by me or under my direct supervision and that I am a duly registered architect under the laws of the State of Minnesota.

For: MEAD & HUNT, INC.

By:
Title: PROJECT MANAGER
Registration No: 22452

ALL SCALES SHOWN ARE BASED ON A STANDARD DRAWING SIZE OF 28" X 40" OR METRIC DRAWING SIZE OF 841mm X 594mm. IF ANY OTHER SIZE DRAWINGS ARE FURNISHED OR PLOTTED THE CONTRACTOR SHALL ADJUST THE SCALES ACCORDINGLY. THE CONTRACTOR SHALL ALSO ADVISE HIS SUB–CONTRACTORS OF THE ABOVE.

Revisions

Symbol	Descriptions	Date	Approved

Architect: ARCHITECTURAL ALLIANCE MINNEAPOLIS, MINNESOTA

Engineer: MEAD & HUNT MADISON, WISCONSIN

U.S. ARMY ENGINEER DISTRICT CORPS OF ENGINEERS OMAHA, NEBRASKA

Designed by: JMM

Drawn by: ACT

Checked by: TLK

Reviewed by: REC

Submitted by:

MINNEAPOLIS–ST.PAUL AFR MINNESOTA

CONSOLIDATED LODGING FACILITY – PHASE THREE –

STRUCTURAL DETAILS

Plot Scale Ratio: 1: 1
Design File: 8785S409.DWG
Date: 2–14–2002
Sheet reference number:
Spec. No.: DACA 45–02–B–0008
Drawing Code:
Contract No.: DACA
AF 721–315–03
S4.9

QJKL-990011P3

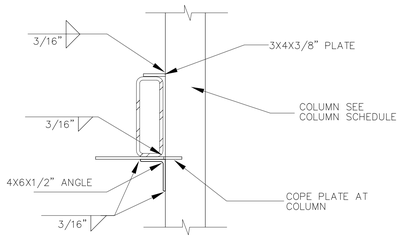

TUBE STEEL CONNECTION TO COLUMN

5 PS2 S4.10

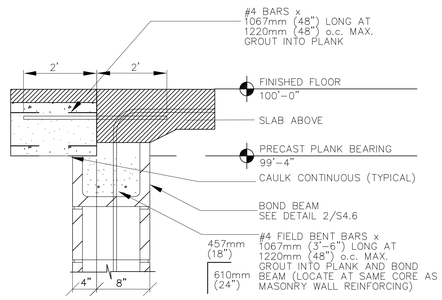

SLAB ABOVE AT INTERIOR BSMT WALL

4 PS2 S4.10 NO SCALE

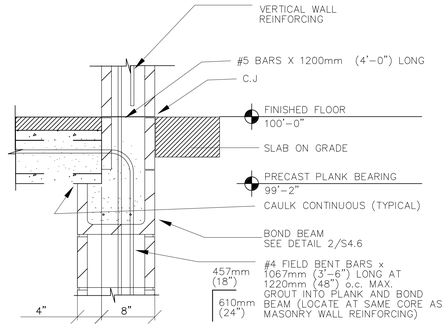

CMU ABOVE AT INTERIOR BSMT WALL

1 PS2 S4.10 NO SCALE

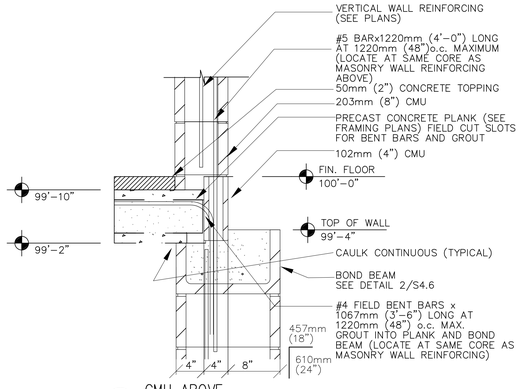

CMU ABOVE

5 PS2 S4.10 NO SCALE

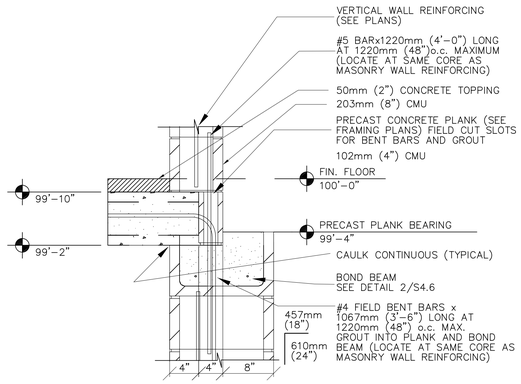

CMU/BRICK ABOVE

2 PS2 S4.10 NO SCALE

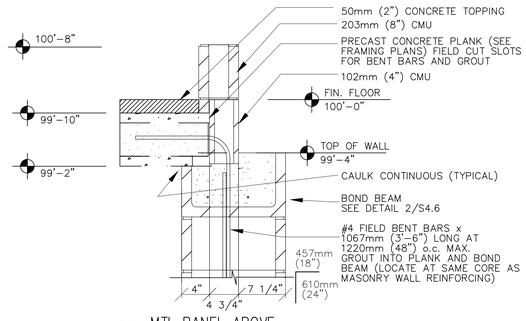

MTL PANEL ABOVE

6 PS2 S4.10 NO SCALE

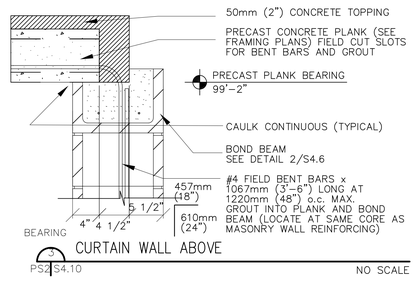

CURTAIN WALL ABOVE

7 PS2 S4.10 NO SCALE

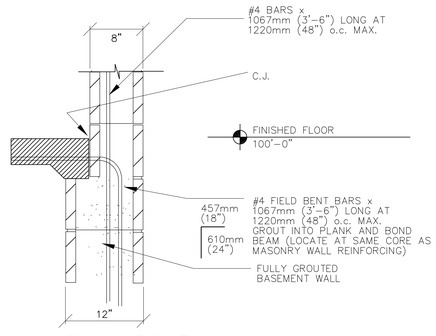

CMU ABOVE AT OPEN INTERIOR

8 PS2 S4.10 NO SCALE

I hereby certify this drawing was prepared by me or under my direct supervision and that I am a duly registered architect under the laws of the State of Minnesota.

For: MEAD & HUNT, INC.

By:
Title: PROJECT MANAGER
Registration No: 22452

ALL SCALES SHOWN ARE BASED ON A STANDARD DRAWING SIZE OF 28" X 40" OR METRIC DRAWING SIZE OF 841mm X 594mm. IF ANY OTHER SIZE DRAWINGS ARE FURNISHED OR PLOTTED THE CONTRACTOR SHALL ADJUST THE SCALES ACCORDINGLY. THE CONTRACTOR SHALL ALSO ADVISE HIS SUB-CONTRACTORS OF THE ABOVE.

Revisions

Symbol	Descriptions	Date	Approved

Architect: ARCHITECTURAL ALLIANCE MINNEAPOLIS, MINNESOTA

Engineer: MEAD & HUNT MADISON, WISCONSIN

U.S. ARMY ENGINEER DISTRICT CORPS OF ENGINEERS OMAHA, NEBRASKA

Designed by: JMM

Drawn by: ACT

Checked by: TLK

Reviewed by: REC

Submitted by:

MINNEAPOLIS-ST.PAUL AFR MINNESOTA

CONSOLIDATED LODGING FACILITY
- PHASE THREE -

STRUCTURAL DETAILS

Plot Scale Ratio: 1: 1
Design File: 8875S410.DWG

Date: 2-14-2002

Sheet reference number:

Spec. No.: DACA 45-02-B-0008

Contract No.: DACA

Drawing Code: AF 721-315-03

S4.10

QJKL-990011P3