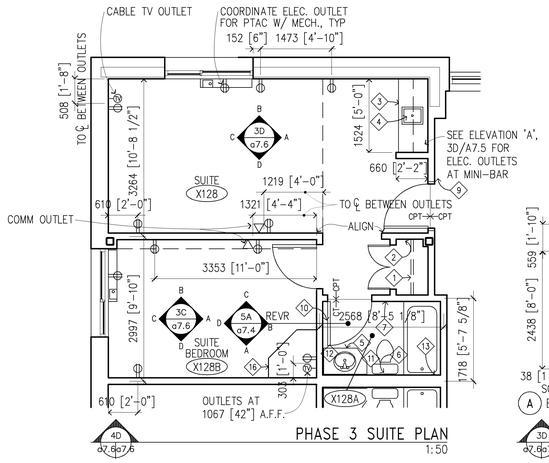

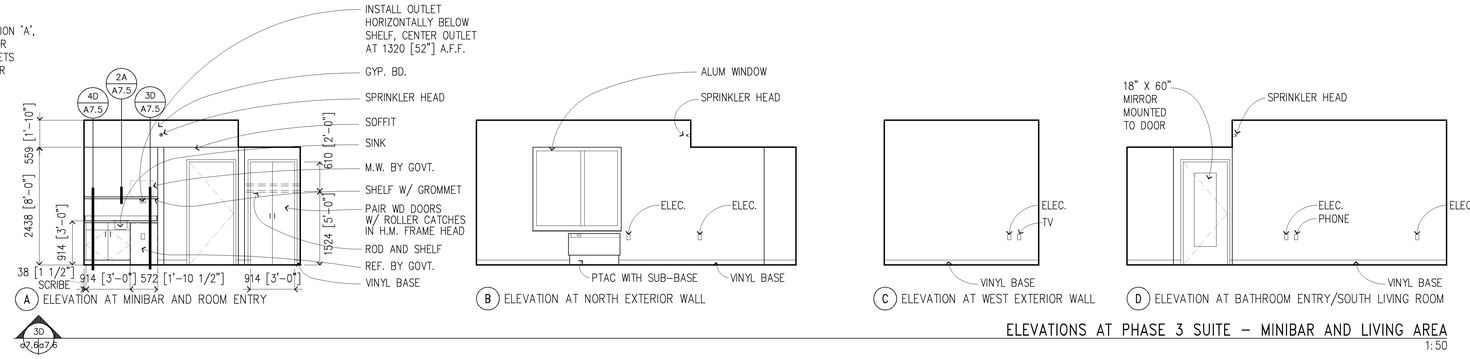

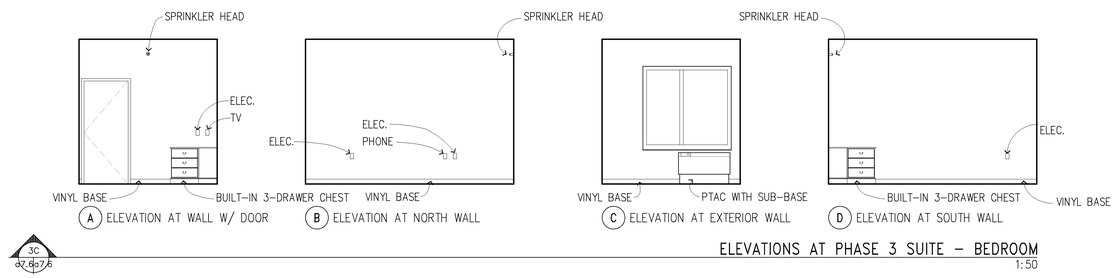

NOTES FOR ENLARGED ROOM PLANS

1. REFER TO SHEET 0.4 FOR TYPICAL MOUNTING HEIGHTS.

KEYNOTES FOR ENLARGED ROOM PLANS

1. METAL CLOSET ROD WITH HANGARS
2. WALL MOUNTED IRONING BOARD HOLDER (FF&E)
3. MINI BAR CASEWORK (WITH UNDERCOUNTER REFRIGERATOR AND MICROWAVE FURNISHED BY GOV'T)
4. S.S. BAR SINK
5. CULTURED MARBLE VANITY WITH DROP IN SINK AND 203 [8"] HIGH APRON BELOW WITH BUILT-IN RECESSED TOILET PAPER HOLDER (AT A.D.A. ROOMS, 127 [5"] HIGH APRON WITHOUT TOILET PAPER HOLDER)
6. 457 [18"] TOWEL SHELF WITH TOWEL BAR
7. 457 [18"] LONG TOWEL BAR
8. 25 [1"] METAL HORIZONTAL BLINDS
9. ROOM SIGNAGE
10. TOWEL PIN MOUNTED ON DOOR
11. TOILET PAPER HOLDER IN VANITY APRON
12. RECESSED FACIAL TISSUE DISPENSER
13. PROVIDE CEMENTIOUS BACKER BOARD IN LIEU OF TOP LAYER OF GYP. BD.
14. CASEWORK
15. PROVIDE MEMBRANE SIM TO "HYDROMENT ULTRA-SET" BELOW CERAMIC FLOOR TILE AT ALL GUEST BATHROOMS ON FLOORS 2, 3, AND 4.
16. BUILT-IN 3 DRAWER CHEST, SEE 5A/A7.6

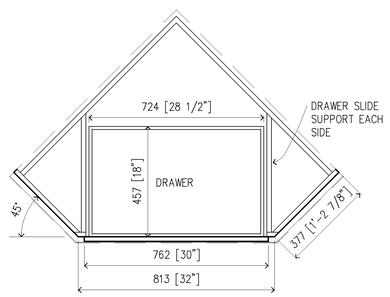

5B BUILT-IN 3-DRAWER CHEST PLAN SECTION
1:10

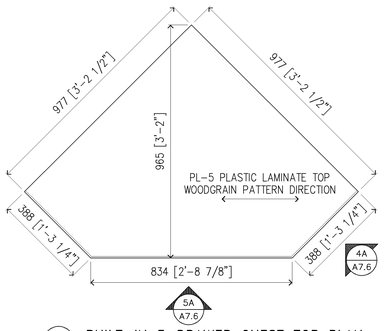

4B BUILT-IN 3-DRAWER CHEST TOP PLAN
1:10

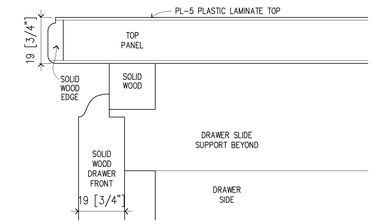

3B SECTION AT TOP PANEL, 3-DRAWER CHEST
FULL SCALE

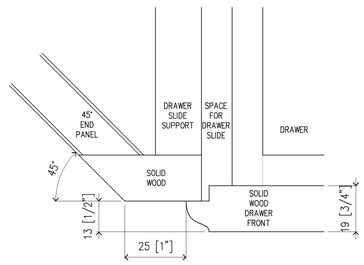

2B PLAN SECTION DETAIL, 3-DRAWER CHEST
FULL SCALE

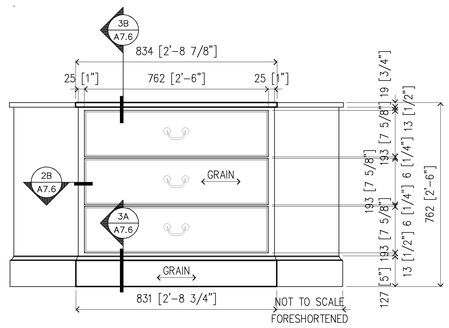

5A BUILT-IN 3-DRAWER CHEST FRONT ELEVATION
1:10

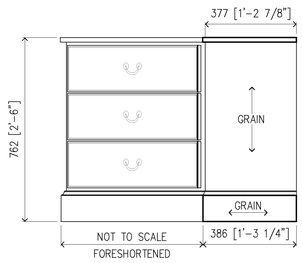

4A BUILT-IN 3-DRAWER CHEST SIDE ELEVATION
1:10

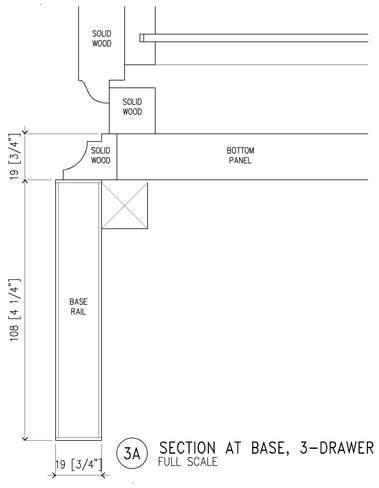

3A SECTION AT BASE, 3-DRAWER CHEST
FULL SCALE

NOTES FOR BUILT-IN 3-DRAWER CHEST AT SUITES (MAKE 4 THUS)

1. PROVIDE DRAWERS WITH STAIN RESISTANT BOTTOMS, LAUAN BACKS AND SIDES WITH SELF-CLOSING DRAWER SLIDES (SINGLE EXTENSION, EPOXY COATED, BOTTOM MOUNT, 4 FRICTION BEARING-MOUNTED NYLON ROLLERS PER PAIR).
2. DRAWER PULLS: KEELER #11869-11321 WITH PEWTER FINISH.
3. UNIT IS TO BE FINISHED ON ALL EXPOSED SIDES.
4. EXPOSED SOLID WOOD AND WOOD VENEER SHALL BE STAINED MAHOGANY TO MATCH FINISH OF WOOD DOORS AND OTHER WOOD MILLWORK.
5. PLASTIC LAMINATE FOR TOP: PL-5 = PIONITE WN Ø21 – "CLASSIC MAHOGANY"

400 200 0 400 800
SCALE: 1 : 10

1000 500 0 1000 2000
SCALE: 1 : 25

I hereby certify this drawing was prepared by me or under my direct supervision and that I am a duly registered architect under the laws of the State of Minnesota.

For: Architectural Alliance
By:
Title: Principal
Registration No: 16854

ALL SCALES SHOWN ARE BASED ON A STANDARD DRAWING SIZE OF 28" X 40" OR METRIC DRAWING SIZE OF 841mm X 594mm. IF ANY OTHER SIZE DRAWINGS ARE FURNISHED OR PLOTTED THE CONTRACTOR SHALL ADJUST THE SCALES ACCORDINGLY. THE CONTRACTOR SHALL ALSO ADVISE HIS SUB-CONTRACTORS OF THE ABOVE.

Revisions

Symbol	Descriptions	Date	Approved

Architect: ARCHITECTURAL ALLIANCE MINNEAPOLIS, MINNESOTA

Engineer: MEAD & HUNT MADISON, WISCONSIN

U.S. ARMY ENGINEER DISTRICT CORPS OF ENGINEERS OMAHA, NEBRASKA

MINNEAPOLIS–ST.PAUL AFR — MINNESOTA

CONSOLIDATED LODGING FACILITY
– PHASE THREE –

ENLARGED ROOM PLANS, INTERIOR ELEVATIONS, AND DETAILS

Designed by: EO
Drawn by: JM
Checked by: EO
Reviewed by: EO
Submitted by:

Plot Scale Ratio: 1: 1
Design File: 9941A76
Date: 2-14-2002
Spec. No.: DACA 45-02-B-0008
Contract No.: DACA xx-xx-x-xxxx
Drawing Code: AF 721-315-03
Sheet reference number: A7.6

QJKL-990011P3

BASEMENT															
ROOM NO.	ROOM NAME	FLOOR	BASE	NORTH WALL		EAST WALL		SOUTH WALL		WEST WALL		CEILING			COMMENTS
004	STAIR "D"	RUBBER FLR.	VB-1	CMU	PT-4	CMU	PT-1	GYP BD	PT-1	CMU	PT-1	PRECAST	PT-2	VARIES	SEE STAIR DRAWINGS FOR DETAILS
0101	HALLWAY	SEALED CONC	---	GYP BD	PT-1	GYP BD	PT-1	CMU	PT-1	CMU	PT-1	ACT	---	8'-0"	
0102	STORAGE ROOM	SEALED CONC	---	CMU	PT-1	GYP BD	PT-1	CMU/GYP BD	PT-1	CMU	PT-1	PRECAST	PT-2	9'-10"	
0103	ELECTRICAL ROOM	SEALED CONC	---	CMU	PT-1	CMU	PT-1	GYP BD	PT-1	GYP BD	PT-1	PRECAST	---	9'-10"	
0104	ELEVATOR MACHINE	SEALED CONC	---	GYP BD	PT-1	CMU	PT-1	GYP BD	PT-1	GYP BD	PT-1	PRECAST	---	9'-10"	
0105	SUMP ROOM	SEALED CONC	---	GYP BD	PT-1	CMU	PT-1	CMU	PT-1	GYP BD	PT-1	PRECAST	---	9'-10"	

FIRST FLOOR															
ROOM NO.	ROOM NAME	FLOOR	BASE	NORTH WALL		EAST WALL		SOUTH WALL		WEST WALL		CEILING			COMMENTS
1100	CORRIDOR	CPT-2/4	VB-1	GYP BD	PT-1	GYP BD	PT-1	GYP BD	PT-1	GYP BD	PT-1	ACT	---	8'-0"	PROVIDE CARPET TILE FOR ADDITIVE BID ITEM
1111	MECHANICAL ROOM	SEALED CONC	---	CMU	PT-1	GYP BD	PT-1	CMU	PT-1	GYP BD	PT-1	PRECAST	SEE COMMENTS	9'-10"	PROVIDE SPRAY-ON ACOUSTIC FINISH
1112	LINEN	VCT-1	VB-1	CMU	PT-1	GYP BD	PT-1	GYP BD	PT-1	CMU	PT-1	ACT	---	8'-0"	
1113	CORRIDOR	CPT-2/4	VB-1	GYP BD	PT-1	GYP BD	PT-1	GYP BD	PT-1	GYP BD	PT-1	ACT	---	8'-0"	PROVIDE CARPET TILE FOR ADDITIVE BID ITEM
1114	JANITOR	VCT-1	VB-1	GYP BD	PT-1	GYP BD	PT-1	GYP BD	PT-1	CMU	PT-1	PRECAST	SP TEXT	9'-10"	
1115	ELEVATOR LOBBY	CPT-2	VB-1	GYP BD	PT-1	GYP BD/GLASS	PT-1	GYP BD/GLASS	PT-1	GYP BD	PT-1	ACT	---		PROVIDE CARPET TILE FOR ADDITIVE BID ITEM
1116	VENDING	T-1	T-1	GYP BD	PT-1	---	---	GYP BD/GLASS	PT-1	GYP BD	PT-1	ACT	---	8'-0"	
1117	CORRIDOR	CPT-2/4	VB-1	GYP BD	PT-1	GYP BD	PT-1	GYP BD	PT-1	GYP BD	PT-1	ACT	---	8'-0"	PROVIDE CARPET TILE FOR ADDITIVE BID ITEM
1118	ELEV MACH	SEALED CONC	---	CMU	PT-1	GYP BD	PT-1	GYP BD	PT-1	GYP BD	PT-1	PRECAST	---	9'-10"	
1119	STORAGE	VCT-1	VB-1	GYP BD	PT-1	GYP BD	PT-1	GYP BD	PT-1	GYP BD	PT-1	PRECAST		9'-10"	
1120	GUEST ROOM	CPT-3	VB-1	GYP BD	PT-7	GYP BD	PT-7	GYP BD	PT-7	GYP BD	PT-6	PRECAST / GYP BD	SP TEXT/PT-8	VARIES	REFER TO DRAWINGS FOR BATHROOM FINISHES
1121	MULTI-PURPOSE	CPT-2	VB-1	GYP BD	PT-1	GYP BD	PT-1	GYP BD	PT-1	GYP BD	PT-1	ACT	---	9'-0"	
1122	GUEST ROOM	CPT-3	VB-1	GYP BD	PT-7	GYP BD	PT-6	GYP BD	PT-7	GYP BD	PT-7	PRECAST / GYP BD	SP TEXT/PT-8	VARIES	REFER TO DRAWINGS FOR BATHROOM FINISHES
1123	A.D.A. ROOM	CPT-3	VB-1	GYP BD	PT-7	GYP BD	PT-6	GYP BD	PT-7	GYP BD	PT-7	PRECAST / GYP BD	SP TEXT/PT-8	VARIES	REFER TO DRAWINGS FOR BATHROOM FINISHES
1124	GUEST ROOM	CPT-3	VB-1	GYP BD	PT-7	GYP BD	PT-7	GYP BD	PT-7	GYP BD	PT-6	PRECAST / GYP BD	SP TEXT/PT-8	VARIES	REFER TO DRAWINGS FOR BATHROOM FINISHES
1125	A.D.A. ROOM	CPT-3	VB-1	GYP BD	PT-7	GYP BD	PT-7	GYP BD	PT-7	GYP BD	PT-6	PRECAST / GYP BD	SP TEXT/PT-8	VARIES	REFER TO DRAWINGS FOR BATHROOM FINISHES
1126	GUEST ROOM	CPT-3	VB-1	GYP BD	PT-6	GYP BD	PT-7	GYP BD	PT-7	GYP BD	PT-7	PRECAST / GYP BD	SP TEXT/PT-8	VARIES	REFER TO DRAWINGS FOR BATHROOM FINISHES
1127	LINEN	VCT-1	VB-1	GYP BD	PT-1	GYP BD	PT-1	GYP BD	PT-1	CMU	PT-1	ACT	---	8'-0"	
1128	SUITE	CPT-3	VB-1	GYP BD	PT-7	GYP BD	PT-7	GYP BD	PT-7	GYP BD	PT-7	PRECAST / GYP BD	SP TEXT/PT-8	VARIES	REFER TO DRAWINGS FOR BATHROOM FINISHES
1128B	SUITE BEDROOM	CPT-3	VB-1	GYP BD	PT-7*/ PT-6*	GYP BD	PT-7	GYP BD	PT-7	GYP BD	PT-7	PRECAST	SP TEXT	9'-10"	*PT-7 AT WINDOW, SOFFIT ABOVE 2438 [8'-0"] PT-6 AT RECESSED WALL BELOW 2438 [8'-0"]
1129	LAUNDRY	VCT-1	VB-1	GYP BD	PT-1	GYP BD	PT-1	GYP BD	PT-1	CMU	PT-1	GYP BD	PAINT	8'-0"	
1130	GUEST ROOM	CPT-3	VB-1	GYP BD	PT-6	GYP BD	PT-7	GYP BD	PT-7	GYP BD	PT-7	PRECAST / GYP BD	SP TEXT/PT-8	VARIES	REFER TO DRAWINGS FOR BATHROOM FINISHES
1131	ELECT-COMM	SEALED CONC	VB-1	GYP BD	PT-1	GYP BD	PT-1	CMU	PT-1	GYP BD	PT-1	PRECAST	---	9'-10"	
1132	GUEST ROOM	CPT-3	VB-1	GYP BD	PT-7	GYP BD	PT-7	GYP BD	PT-6	GYP BD	PT-7	PRECAST / GYP BD	SP TEXT/PT-8	VARIES	REFER TO DRAWINGS FOR BATHROOM FINISHES
1133	GUEST ROOM	CPT-3	VB-1	GYP BD	PT-6	GYP BD	PT-7	GYP BD	PT-7	GYP BD	PT-7	PRECAST / GYP BD	SP TEXT/PT-8	VARIES	REFER TO DRAWINGS FOR BATHROOM FINISHES
1134	GUEST ROOM	CPT-3	VB-1	GYP BD	PT-6	GYP BD	PT-7	GYP BD	PT-7	GYP BD	PT-7	PRECAST / GYP BD	SP TEXT/PT-8	VARIES	REFER TO DRAWINGS FOR BATHROOM FINISHES
1135	GUEST ROOM	CPT-3	VB-1	GYP BD	PT-7	GYP BD	PT-7	GYP BD	PT-6	GYP BD	PT-7	PRECAST / GYP BD	SP TEXT/PT-8	VARIES	REFER TO DRAWINGS FOR BATHROOM FINISHES
1136	GUEST ROOM	CPT-3	VB-1	GYP BD	PT-7	GYP BD	PT-7	GYP BD	PT-6	GYP BD	PT-7	PRECAST / GYP BD	SP TEXT/PT-8	VARIES	REFER TO DRAWINGS FOR BATHROOM FINISHES
1137	GUEST ROOM	CPT-3	VB-1	GYP BD	PT-6	GYP BD	PT-7	GYP BD	PT-7	GYP BD	PT-7	PRECAST / GYP BD	SP TEXT/PT-8	VARIES	REFER TO DRAWINGS FOR BATHROOM FINISHES
1138	GUEST ROOM	CPT-3	VB-1	GYP BD	PT-6	GYP BD	PT-7	GYP BD	PT-7	GYP BD	PT-7	PRECAST / GYP BD	SP TEXT/PT-8	VARIES	REFER TO DRAWINGS FOR BATHROOM FINISHES
1139	GUEST ROOM	CPT-3	VB-1	GYP BD	PT-7	GYP BD	PT-7	GYP BD	PT-6	GYP BD	PT-7	PRECAST / GYP BD	SP TEXT/PT-8	VARIES	REFER TO DRAWINGS FOR BATHROOM FINISHES
1140	GUEST ROOM	CPT-3	VB-1	GYP BD	PT-7	GYP BD	PT-7	GYP BD	PT-6	GYP BD	PT-7	PRECAST / GYP BD	SP TEXT/PT-8	VARIES	REFER TO DRAWINGS FOR BATHROOM FINISHES
1141	GUEST ROOM	CPT-3	VB-1	GYP BD	PT-6	GYP BD	PT-7	GYP BD	PT-7	GYP BD	PT-7	PRECAST / GYP BD	SP TEXT/PT-8	VARIES	REFER TO DRAWINGS FOR BATHROOM FINISHES
1142	GUEST ROOM	CPT-3	VB-1	GYP BD	PT-6	GYP BD	PT-7	GYP BD	PT-7	GYP BD	PT-7	PRECAST / GYP BD	SP TEXT/PT-8	VARIES	REFER TO DRAWINGS FOR BATHROOM FINISHES
1143	GUEST ROOM	CPT-3	VB-1	GYP BD	PT-7	GYP BD	PT-7	GYP BD	PT-6	GYP BD	PT-7	PRECAST / GYP BD	SP TEXT/PT-8	VARIES	REFER TO DRAWINGS FOR BATHROOM FINISHES
1144	GUEST ROOM	CPT-3	VB-1	GYP BD	PT-7	GYP BD	PT-7	GYP BD	PT-6	GYP BD	PT-7	PRECAST / GYP BD	SP TEXT/PT-8	VARIES	REFER TO DRAWINGS FOR BATHROOM FINISHES
1145	GUEST ROOM	CPT-3	VB-1	GYP BD	PT-6	GYP BD	PT-7	GYP BD	PT-7	GYP BD	PT-7	PRECAST / GYP BD	SP TEXT/PT-8	VARIES	REFER TO DRAWINGS FOR BATHROOM FINISHES
1146	GUEST ROOM	CPT-3	VB-1	GYP BD	PT-6	GYP BD	PT-7	GYP BD	PT-7	GYP BD	PT-7	PRECAST / GYP BD	SP TEXT/PT-8	VARIES	REFER TO DRAWINGS FOR BATHROOM FINISHES
1147	GUEST ROOM	CPT-3	VB-1	GYP BD	PT-7	GYP BD	PT-7	GYP BD	PT-7	GYP BD	PT-6	PRECAST / GYP BD	SP TEXT/PT-8	VARIES	REFER TO DRAWINGS FOR BATHROOM FINISHES
1148	GUEST ROOM	CPT-3	VB-1	GYP BD	PT-7	GYP BD	PT-6	GYP BD	PT-7	GYP BD	PT-7	PRECAST / GYP BD	SP TEXT/PT-8	VARIES	REFER TO DRAWINGS FOR BATHROOM FINISHES
1149	ELECTRICAL	SEALED CONC	VB-1	GYP BD	PT-1	GYP BD	PT-1	GYP BD	PT-1	CMU	PT-1	ACT	---	8'-0"	
1150	VESTIBULE	FLOOR GRILL	VB-1	GYP BD	PT-1	GLASS	---	GYP BD	PT-1	GYP BD	PT-1	ACT	---	8'-0"	SEE 3A/A5.20
1151	CORRIDOR	CPT-2/4	T-1	GYP BD	PT-1	GYP BD	PT-1	GYP BD	PT-1	GYP BD	PT-1	ACT	---	8'-0"	PROVIDE CARPET TILE FOR ADDITIVE BID ITEM
104	STAIR "D"	RUBBER FLR.	VB-1	CMU	PT-4	CMU	PT-1	GYP BD	PT-1	CMU	PT-1	GYP BD	PT-2	VARIES	SEE STAIR DRAWINGS FOR DETAILS
105	STAIR "E"	RUBBER FLR.	VB-1	GYP BD	PT-1	GLASS	---	GLASS	---	GYP BD	PT-1	GYP BD	PT-2	VARIES	SEE STAIR DRAWINGS FOR DETAILS

SECOND FLOOR, THIRD FLOOR AND FOURTH FLOORS															
ROOM NO.	ROOM NAME	FLOOR	BASE	NORTH WALL		EAST WALL		SOUTH WALL		WEST WALL		CEILING			COMMENTS
2100 3100 4100	CORRIDOR	CPT-2/4	VB-1	GYP BD	PT-1	GYP BD	PT-1	GYP BD	PT-1	GYP BD	PT-1	ACT	---	8'-0"	PROVIDE CARPET TILE FOR ADDITIVE BID ITEM
2111 3111 4111	GUEST ROOM	CPT-3	VB-1	GYP BD	PT-7	GYP BD	PT-7	GYP BD	PT-6	GYP BD	PT-7	PRECAST / GYP BD	SP TEXT/PT-8	VARIES	REFER TO DRAWINGS FOR BATHROOM FINISHES
2112 3112 4112	LINEN	VCT-1	VB-1	CMU	PT-1	GYP BD	PT-1	GYP BD	PT-1	CMU	PT-1	ACT		8'-0"	
2113 3113 4113	GUEST ROOM	CPT-3	VB-1	GYP BD	PT-6	GYP BD	PT-7	GYP BD	PT-7	GYP BD	PT-7	PRECAST / GYP BD	SP TEXT/PT-8	VARIES	REFER TO DRAWINGS FOR BATHROOM FINISHES
2114 3114 4114	JANITOR	VCT-1	VB-1	GYP BD	PT-1	GYP BD	PT-1	GYP BD	PT-1	CMU	PT-1	PRECAST		9'-10"	
2115 3115 4115	ELEVATOR LOBBY	CPT-2	VB-1	GYP BD	PT-1	GYP BD/ GLASS	PT-1	GYP BD/ GLASS	PT-1	GYP BD	PT-1	ACT	---	8'-0"	PROVIDE CARPET TILE FOR ADDITIVE BID ITEM
2116 3116 4116	VENDING	T-1	T-1	GYP BD	PT-1	---	---	GYP BD	PT-1	GYP BD	PT-1	ACT	---	8'-0"	
2117 3117 4117	CORRIDOR	CPT-2/4	VB-1	GYP BD	PT-1	GYP BD	PT-1	GYP BD	PT-1	GYP BD	PT-1	ACT	---	8'-0"	PROVIDE CARPET TILE FOR ADDITIVE BID ITEM
2118 3118 4118	NOT USED														
2119 3119 4119	GUEST ROOM	CPT-3	VB-1	GYP BD	PT-7	GYP BD	PT-6	GYP BD	PT-7	GYP BD	PT-7	PRECAST / GYP BD	SP TEXT/PT-8	VARIES	REFER TO DRAWINGS FOR BATHROOM FINISHES
2120 3120 4120	GUEST ROOM	CPT-3	VB-1	GYP BD	PT-7	GYP BD	PT-7	GYP BD	PT-7	GYP BD	PT-6	PRECAST / GYP BD	SP TEXT/PT-8	VARIES	REFER TO DRAWINGS FOR BATHROOM FINISHES
2121 3121 4121	GUEST ROOM	CPT-3	VB-1	GYP BD	PT-7	GYP BD	PT-7	GYP BD	PT-7	GYP BD	PT-6	PRECAST / GYP BD	SP TEXT/PT-8	VARIES	REFER TO DRAWINGS FOR BATHROOM FINISHES
2122 3122 4122	GUEST ROOM	CPT-3	VB-1	GYP BD	PT-7	GYP BD	PT-6	GYP BD	PT-7	GYP BD	PT-7	PRECAST / GYP BD	SP TEXT/PT-8	VARIES	REFER TO DRAWINGS FOR BATHROOM FINISHES

5A ROOM FINISH SCHEDULE
–

SECOND FLOOR, THIRD FLOOR AND FOURTH FLOORS CONT.															
ROOM NO.	ROOM NAME	FLOOR	BASE	NORTH WALL		EAST WALL		SOUTH WALL		WEST WALL		CEILING			COMMENTS
2123 3123 4123	GUEST ROOM	CPT-3	VB-1	GYP BD	PT-7	GYP BD	PT-6	GYP BD	PT-7	GYP BD	PT-7	PRECAST / GYP BD	SP TEXT/PT-8	VARIES	REFER TO DRAWINGS FOR BATHROOM FINISHES
2124 3124 4124	GUEST ROOM	CPT-3	VB-1	GYP BD	PT-7	GYP BD	PT-7	GYP BD	PT-7	GYP BD	PT-6	PRECAST / GYP BD	SP TEXT/PT-8	VARIES	REFER TO DRAWINGS FOR BATHROOM FINISHES
2125 3125 4201	A.D.A. ROOM	CPT-3	VB-1	GYP BD	PT-7	GYP BD	PT-7	GYP BD	PT-7	GYP BD	PT-6	PRECAST / GYP BD	SP TEXT/PT-8	VARIES	REFER TO DRAWINGS FOR BATHROOM FINISHES
2126 3126 4126	GUEST ROOM	CPT-3	VB-1	GYP BD	PT-7	GYP BD	PT-6	GYP BD	PT-7	GYP BD	PT-7	PRECAST / GYP BD	SP TEXT/PT-8	VARIES	REFER TO DRAWINGS FOR BATHROOM FINISHES
2127 3127 4127	LINEN	VCT-1	VB-1	CMU	PT-1	GYP BD	PT-1	GYP BD	PT-1	CMU	PT-1	ACT		8'-0"	
2128 3128 4128	SUITE	CPT-3	VB-1	GYP BD	PT-7	GYP BD	PT-7	GYP BD	PT-7	GYP BD	PT-7	PRECAST / GYP BD	SP TEXT/PT-8	VARIES	REFER TO DRAWINGS FOR BATHROOM FINISHES
2128B 3128B 4128B	SUITE BEDROOM	CPT-3	VB-1	GYP BD	PT-7*/ PT-6*	GYP BD	PT-7	GYP BD	PT-7	GYP BD	PT-7	PRECAST	SP TEXT	9'-10"	*PT-7 AT WINDOW, SOFFIT ABOVE 2438 [8'-0"] PT-6 AT RECESSED WALL BELOW 2438 [8'-0"]
2129 3129 4129	LAUNDRY	VCT-1	VB-1	GYP BD	PT-1	GYP BD	PT-1	GYP BD	PT-1	CMU	PT-1	GYP BD		8'-0"	REFER TO DRAWINGS FOR BATHROOM FINISHES
2130 3130 4130	GUEST ROOM	CPT-3	VB-1	GYP BD	PT-6	GYP BD	PT-7	GYP BD	PT-7	GYP BD	PT-7	PRECAST / GYP BD	SP TEXT/PT-8	VARIES	
2131 3131 4131	ELECT-COMM														
2132 3132 4132	GUEST ROOM	CPT-3	VB-1	GYP BD	PT-7	GYP BD	PT-7	GYP BD	PT-6	GYP BD	PT-7	PRECAST / GYP BD	SP TEXT/PT-8	VARIES	REFER TO DRAWINGS FOR BATHROOM FINISHES
2133 3133 4133	GUEST ROOM	CPT-3	VB-1	GYP BD	PT-6	GYP BD	PT-7	GYP BD	PT-7	GYP BD	PT-7	PRECAST / GYP BD	SP TEXT/PT-8	VARIES	REFER TO DRAWINGS FOR BATHROOM FINISHES
2134 3134 4134	GUEST ROOM	CPT-3	VB-1	GYP BD	PT-6	GYP BD	PT-7	GYP BD	PT-7	GYP BD	PT-7	PRECAST / GYP BD	SP TEXT/PT-8	VARIES	REFER TO DRAWINGS FOR BATHROOM FINISHES
2135 3135 4135	GUEST ROOM	CPT-3	VB-1	GYP BD	PT-7	GYP BD	PT-7	GYP BD	PT-6	GYP BD	PT-7	PRECAST / GYP BD	SP TEXT/PT-8	VARIES	REFER TO DRAWINGS FOR BATHROOM FINISHES
2136 3136 4136	GUEST ROOM	CPT-3	VB-1	GYP BD	PT-7	GYP BD	PT-7	GYP BD	PT-6	GYP BD	PT-7	PRECAST / GYP BD	SP TEXT/PT-8	VARIES	REFER TO DRAWINGS FOR BATHROOM FINISHES
2137 3137 4137	GUEST ROOM	CPT-3	VB-1	GYP BD	PT-6	GYP BD	PT-7	GYP BD	PT-7	GYP BD	PT-7	PRECAST / GYP BD	SP TEXT/PT-8	VARIES	REFER TO DRAWINGS FOR BATHROOM FINISHES
2138 3138 4138	GUEST ROOM	CPT-3	VB-1	GYP BD	PT-6	GYP BD	PT-7	GYP BD	PT-7	GYP BD	PT-7	PRECAST / GYP BD	SP TEXT/PT-8	VARIES	REFER TO DRAWINGS FOR BATHROOM FINISHES
2139 3139 4139	GUEST ROOM	CPT-3	VB-1	GYP BD	PT-7	GYP BD	PT-7	GYP BD	PT-6	GYP BD	PT-7	PRECAST / GYP BD	SP TEXT/PT-8	VARIES	REFER TO DRAWINGS FOR BATHROOM FINISHES
2140 3140 4140	GUEST ROOM	CPT-3	VB-1	GYP BD	PT-7	GYP BD	PT-7	GYP BD	PT-6	GYP BD	PT-7	PRECAST / GYP BD	SP TEXT/PT-8	VARIES	REFER TO DRAWINGS FOR BATHROOM FINISHES
2141 3141 4141	GUEST ROOM	CPT-3	VB-1	GYP BD	PT-6	GYP BD	PT-7	GYP BD	PT-7	GYP BD	PT-7	PRECAST / GYP BD	SP TEXT/PT-8	VARIES	REFER TO DRAWINGS FOR BATHROOM FINISHES
2142 3142 4142	GUEST ROOM	CPT-3	VB-1	GYP BD	PT-6	GYP BD	PT-7	GYP BD	PT-7	GYP BD	PT-7	PRECAST / GYP BD	SP TEXT/PT-8	VARIES	REFER TO DRAWINGS FOR BATHROOM FINISHES
2143 3143 4143	GUEST ROOM	CPT-3	VB-1	GYP BD	PT-7	GYP BD	PT-7	GYP BD	PT-6	GYP BD	PT-7	PRECAST / GYP BD	SP TEXT/PT-8	VARIES	REFER TO DRAWINGS FOR BATHROOM FINISHES
2144 3144 4144	GUEST ROOM	CPT-3	VB-1	GYP BD	PT-7	GYP BD	PT-7	GYP BD	PT-6	GYP BD	PT-7	PRECAST / GYP BD	SP TEXT/PT-8	VARIES	REFER TO DRAWINGS FOR BATHROOM FINISHES
2145 3145 4145	GUEST ROOM	CPT-3	VB-1	GYP BD	PT-6	GYP BD	PT-7	GYP BD	PT-7	GYP BD	PT-7	PRECAST / GYP BD	SP TEXT/PT-8	VARIES	REFER TO DRAWINGS FOR BATHROOM FINISHES
2146 3146 4146	GUEST ROOM	CPT-3	VB-1	GYP BD	PT-6	GYP BD	PT-7	GYP BD	PT-7	GYP BD	PT-7	PRECAST / GYP BD	SP TEXT/PT-8	VARIES	REFER TO DRAWINGS FOR BATHROOM FINISHES
2147 3147 4147	GUEST ROOM	CPT-3	VB-1	GYP BD	PT-7	GYP BD	PT-6	GYP BD	PT-7	GYP BD	PT-7	PRECAST / GYP BD	SP TEXT/PT-8	VARIES	REFER TO DRAWINGS FOR BATHROOM FINISHES
2148 3148 4148	GUEST ROOM	CPT-3	VB-1	GYP BD	PT-7	GYP BD	PT-7	GYP BD	PT-7	GYP BD	PT-6	PRECAST / GYP BD	SP TEXT/PT-8	VARIES	REFER TO DRAWINGS FOR BATHROOM FINISHES
2149 3149 4149	ELECTRICAL	SEALED CONC	VB-1	GYP BD	PT-1	GYP BD	PT-1	GYP BD	PT-1	GYP BD	PT-1	ACT	---	8'-0"	
2151 3151 4151	CORRIDOR	CPT-2/4	VB-1	GYP BD	PT-1	GYP BD	PT-1	GYP BD	PT-1	GYP BD	PT-1	ACT	---	8'-0"	PROVIDE CARPET TILE FOR ADDITIVE BID ITEM
204 304 4201	STAIR "D"	RUBBER TILE	VB-1	CMU	PT-4	CMU	PT-1	GYP BD	PT-1	CMU	PT-1	GYP BD	PT-2	VAREIS	SEE STAIR DRAWINGS FOR DETAILS
205 305 405	STAIR "E"	RUBBER TILE	VB-1	GYP BD	PT-1	CMU	PT-1	GYP BD	PT-4	GYP BD	PT-1	GYP BD	PT-2	VARIES	SEE STAIR DRAWINGS FOR DETAILS

SECOND FLOOR, EXISTING PHASE ONE BUILDING															
ROOM NO.	ROOM NAME	FLOOR	BASE	NORTH WALL		EAST WALL		SOUTH WALL		WEST WALL		CEILING			COMMENTS
2001	GUEST ROOM	CPT-3	VB-1	GYP BD	PT-6	GYP BD	PT-7	GYP BD	PT-7	GYP BD	PT-7	GYP BD	SP TEXT/PT-8	VARIES	REFER TO DRAWINGS FOR BATHROOM FINISHES
2002	GUEST ROOM	CPT-3	VB-1	GYP BD	PT-7	GYP BD	PT-7	GYP BD	PT-6	GYP BD	PT-7	GYP BD	SP TEXT/PT-8	VARIES	REFER TO DRAWINGS FOR BATHROOM FINISHES
2003	GUEST ROOM	CPT-3	VB-1	GYP BD	PT-6	GYP BD	PT-7	GYP BD	PT-7	GYP BD	PT-7	GYP BD	SP TEXT/PT-8	VARIES	REFER TO DRAWINGS FOR BATHROOM FINISHES
2010	GUEST ROOM	CPT-3	VB-1	GYP BD	PT-6	GYP BD	PT-7	GYP BD	PT-7	GYP BD	PT-7	GYP BD	SP TEXT/PT-8	VARIES	REFER TO DRAWINGS FOR BATHROOM FINISHES
2011	GUEST ROOM	CPT-3	VB-1	GYP BD	PT-7	GYP BD	PT-7	GYP BD	PT-6	GYP BD	PT-7	GYP BD	SP TEXT/PT-8	VARIES	REFER TO DRAWINGS FOR BATHROOM FINISHES
2012	GUEST ROOM	CPT-3	VB-1	GYP BD	PT-6	GYP BD	PT-7	GYP BD	PT-7	GYP BD	PT-7	GYP BD	SP TEXT/PT-8	VARIES	REFER TO DRAWINGS FOR BATHROOM FINISHES
2013	GUEST ROOM	CPT-3	VB-1	GYP BD	PT-7	GYP BD	PT-6	GYP BD	PT-7	GYP BD	PT-7	PRECAST / GYP BD	SP TEXT/PT-8	VARIES	REFER TO DRAWINGS FOR BATHROOM FINISHES
2014	GUEST ROOM	CPT-3	VB-1	GYP BD	PT-7	GYP BD	PT-7	GYP BD	PT-6	GYP BD	PT-7	PRECAST / GYP BD	SP TEXT/PT-8	VARIES	REFER TO DRAWINGS FOR BATHROOM FINISHES
2015	GUEST ROOM	CPT-3	VB-1	GYP BD	PT-7	GYP BD	PT-6	GYP BD	PT-7	GYP BD	PT-7	PRECAST / GYP BD	SP TEXT/PT-8	VARIES	REFER TO DRAWINGS FOR BATHROOM FINISHES
2016	GUEST ROOM	CPT-3	VB-1	GYP BD	PT-7	GYP BD	PT-7	GYP BD	PT-6	GYP BD	PT-7	PRECAST / GYP BD	SP TEXT/PT-8	VARIES	REFER TO DRAWINGS FOR BATHROOM FINISHES
2017	GUEST ROOM	CPT-3	VB-1	GYP BD	PT-7	GYP BD	PT-6	GYP BD	PT-7	GYP BD	PT-7	PRECAST / GYP BD	SP TEXT/PT-8	VARIES	REFER TO DRAWINGS FOR BATHROOM FINISHES
2018	GUEST ROOM	CPT-3	VB-1	GYP BD	PT-7	GYP BD	PT-7	GYP BD	PT-6	GYP BD	PT-7	PRECAST / GYP BD	SP TEXT/PT-8	VARIES	REFER TO DRAWINGS FOR BATHROOM FINISHES

I hereby certify this drawing was prepared by me or under my direct supervision and that I am a duly registered architect under the laws of the State of Minnesota.

For: Architectural Alliance
By:
Title: Principal
Registration No: 16854

ALL SCALES SHOWN ARE BASED ON A STANDARD DRAWING SIZE OF 28" X 40" OR METRIC DRAWING SIZE OF 841mm X 594mm. IF ANY OTHER SIZE DRAWINGS ARE FURNISHED OR PLOTTED THE CONTRACTOR SHALL ADJUST THE SCALES ACCORDINGLY. THE CONTRACTOR SHALL ALSO ADVISE HIS SUB-CONTRACTORS OF THE ABOVE.

Revisions

Symbol	Descriptions	Date	Approved

Architect:
ARCHITECTURAL ALLIANCE
MINNEAPOLIS, MINNESOTA

Engineer:
MEAD & HUNT
MADISON, WISCONSIN

U.S. ARMY ENGINEER DISTRICT
CORPS OF ENGINEERS
OMAHA, NEBRASKA

Designed by: SS
Drawn by: SS/JM
Checked by: PS
Reviewed by: EO
Submitted by:

MINNEAPOLIS-ST.PAUL AFR — MINNESOTA

CONSOLIDATED LODGING FACILITY
– PHASE THREE –

ROOM FINISH SCHEDULE

Plot Scale Ratio: 1: 1
Design File:
Date: 2-14-2002
Spec. No.: DACA 45-02-B-0008
Contract No.: DACA xx-xx-x-xxxx
Drawing Code: AF 721-315-03
Sheet reference number: A8.4

QJKL-990011P3

Basement

DOOR NO.	DOOR SIZE	DOOR TYPE	FRAME	FRAME TYPE	HEAD DTL	JAMB DTL	HARDWARE GROUP	RATING	REMARKS
0101	3'-6"x7'-0"	D5	HM	F3	5B/A8.10	4B/A8.10	3	1-1/2 HR	
0102	3'-6"x7'-0"	D5	HM	F3	4C/A8.10	2C/A8.10 -- 4C/A8.10	2	20 MIN.	
0103	3'-6"x7'-0"	D5	HM	F3	4C/A8.10	2C/A8.10 -- 4C/A8.10	2	20 MIN.	
0104	3'-0"x7'-0"	D5	HM	F3	4C/A8.10	4C/A8.10 - SIM.2C/A8.10	2	1-1/2 HR	
0105	3'-0"x7'-0"	D5	HM	F3	4C/A8.10	4C/A8.10 - SIM.2C/A8.10	2	20 MIN.	

First Floor

DOOR NO.	DOOR SIZE	DOOR TYPE	FRAME	FRAME TYPE	HEAD DTL	JAMB DTL	HARDWARE GROUP	RATING	REMARKS
1100	PR 3'-0"x7'-0"	D5	HM	F3	2C/A8.11	SIM 4C/A8.10	11	1-1/2 HR	4.
1100A	PR 3'-0"x7'-10"	D3	ALUM	ALUM	4A/A8.10 SIM	SIM 5A/A8.10	7		5.
1111	PR 3'-0"x7'-10"	D5	HM	F3	4A/A8.10	3A/A5.16 -- 3B/A5.16	9		INSUL.
1112	3'-0"x7'-0"	D1	HM	F3	4C/A8.10	2C/A8.10 -- 4C/A8.10	1	20 MIN.	
1113	3'-0"x7'-0"	D3	ALUM	ALUM	5C/A5.11 SIM	2B/A5.12	7		5.
1114	3'-0"x7'-0"	D1	HM	F3	4C/A8.10	2C/A8.10 -- 4C/A8.10	2	20 MIN.	
1115A	COILING FIRE DR.	D6	--				--	1-1/2 HR	3.
1115B	PR 3'-0"x8'-10"	D5	HM	F1-A	2C/A5.12	4B/A5.12	11	1-1/2 HR	4.
1117	PR 3'-0"x7'-0"	D5	HM	F3	2C/A8.11	SIM 4C/A8.10	11	1-1/2 HR	4.
1118	3'-0"x7'-0"	D5	HM	F3	4C/A8.10	2C/A8.10 -- 4C/A8.10	2	1-1/2 HR	
1119	3'-0"x7'-0"	D1	HM	F3	4C/A8.10	2C/A8.10 -- 4C/A8.10	2	20 MIN.	
1120	3'-0"x7'-0"	D1	HM	F3	4C/A8.10	2C/A8.10 -- 4C/A8.10	5	20 MIN.	
1120A	2'-10"x7'-0"	D2	HM	F3	4C/A8.10	2C/A8.10 -- 4C/A8.10	6		1., 6.
1121	3'-0"x7'-0"	D1	HM	F3	4C/A8.10	SIM 4C/A8.10	1	1-1/2 HR	
1122	3'-0"x7'-0"	D1	HM	F3	4C/A8.10	2C/A8.10 -- 4C/A8.10	5	20 MIN.	
1122A	2'-10"x7'-0"	D2	HM	F3	4C/A8.10	2C/A8.10 -- 4C/A8.10	6		1., 6.
1123	3'-0"x7'-0"	D1	HM	F3	4C/A8.10	2C/A8.10 -- 4C/A8.10	5	20 MIN.	
1123A	3'-0"x7'-0"	D2	HM	F3	4C/A8.10	2C/A8.10 -- 4C/A8.10	6		1.
1124	3'-0"x7'-0"	D1	HM	F3	4C/A8.10	2C/A8.10 -- 4C/A8.10	5	20 MIN.	
1124A	2'-10"x7'-0"	D2	HM	F3	4C/A8.10	2C/A8.10 -- 4C/A8.10	6		1., 6.
1125	3'-0"x7'-0"	D1	HM	F3	4C/A8.10	2C/A8.10 -- 4C/A8.10	5	20 MIN.	
1125A	3'-0"x7'-0"	D2	HM	F3	4C/A8.10	2C/A8.10 -- 4C/A8.10	6		1.
1126	3'-0"x7'-0"	D1	HM	F3	4C/A8.10	2C/A8.10 -- 4C/A8.10	5	20 MIN.	
1126A	2'-10"x7'-0"	D2	HM	F3	4C/A8.10	2C/A8.10 -- 4C/A8.10	6		1., 6.
1127	3'-0"x7'-0"	D1	HM	F3	4C/A8.10	2C/A8.10 -- 4C/A8.10	1	20 MIN.	
1128	3'-0"x7'-0"	D1	HM	F3	4C/A8.10	2C/A8.10 -- 4C/A8.10	5	20 MIN.	
1128A	2'-10"x7'-0"	D2	HM	F3	4C/A8.10	2C/A8.10 -- 4C/A8.10	6		1.
1128B	3'-0"x7'-0"	D2	HM	F3	4C/A8.10	2C/A8.10 -- 4C/A8.10	3-NR		1.
1128C	PR 1'-6"x7'-0"	D2	HM	F3	4C/A8.10	4C/A8.10	10		SEE ELEVATION 3D/A7.6
1129	3'-0"x7'-0"	D1	HM	F3	4C/A8.10	2B/A8.10 & 2C/A8.10	1	20 MIN.	FRAME DEPTH FOR GYP. BD
1130	3'-0"x7'-0"	D1	HM	F3	4C/A8.10	2C/A8.10 -- 4C/A8.10	5	20 MIN.	
1130A	2'-10"x7'-0"	D2	HM	F3	4C/A8.10	2C/A8.10 -- 4C/A8.10	6		1.
1131	3'-0"x7'-0"	D1	HM	F3	4C/A8.10	2C/A8.10 -- 4C/A8.10	2	20 MIN.	
1132	3'-0"x7'-0"	D1	HM	F3	4C/A8.10	2C/A8.10 -- 4C/A8.10	5	20 MIN.	
1132A	2'-10"x7'-0"	D2	HM	F3	4C/A8.10	2C/A8.10 -- 4C/A8.10	6		1.
1133	3'-0"x7'-0"	D1	HM	F3	4C/A8.10	2C/A8.10 -- 4C/A8.10	5	20 MIN.	
1133A	2'-10"x7'-0"	D2	HM	F3	4C/A8.10	2C/A8.10 -- 4C/A8.10	6		1.
1134	3'-0"x7'-0"	D1	HM	F3	4C/A8.10	2C/A8.10 -- 4C/A8.10	5	20 MIN.	
1134A	2'-10"x7'-0"	D2	HM	F3	4C/A8.10	2C/A8.10 -- 4C/A8.10	6		1.
1135	3'-0"x7'-0"	D1	HM	F3	4C/A8.10	2C/A8.10 -- 4C/A8.10	5	20 MIN.	
1135A	2'-10"x7'-0"	D2	HM	F3	4C/A8.10	2C/A8.10 -- 4C/A8.10	6		1.
1136	3'-0"x7'-0"	D1	HM	F3	4C/A8.10	2C/A8.10 -- 4C/A8.10	5	20 MIN.	
1136A	2'-10"x7'-0"	D2	HM	F3	4C/A8.10	2C/A8.10 -- 4C/A8.10	6		1.
1137	3'-0"x7'-0"	D1	HM	F3	4C/A8.10	2C/A8.10 -- 4C/A8.10	5	20 MIN.	
1137A	2'-10"x7'-0"	D2	HM	F3	4C/A8.10	2C/A8.10 -- 4C/A8.10	6		1.
1138	3'-0"x7'-0"	D1	HM	F3	4C/A8.10	2C/A8.10 -- 4C/A8.10	5	20 MIN.	
1138A	2'-10"x7'-0"	D2	HM	F3	4C/A8.10	2C/A8.10 -- 4C/A8.10	6		1.
1139	3'-0"x7'-0"	D1	HM	F3	4C/A8.10	2C/A8.10 -- 4C/A8.10	5	20 MIN.	
1139A	2'-10"x7'-0"	D2	HM	F3	4C/A8.10	2C/A8.10 -- 4C/A8.10	6		1.
1140	3'-0"x7'-0"	D1	HM	F3	4C/A8.10	2C/A8.10 -- 4C/A8.10	5	20 MIN.	
1140A	2'-10"x7'-0"	D2	HM	F3	4C/A8.10	2C/A8.10 -- 4C/A8.10	6		1.
1141	3'-0"x7'-0"	D1	HM	F3	4C/A8.10	2C/A8.10 -- 4C/A8.10	5	20 MIN.	
1141A	2'-10"x7'-0"	D2	HM	F3	4C/A8.10	2C/A8.10 -- 4C/A8.10	6		1.
1142	3'-0"x7'-0"	D1	HM	F3	4C/A8.10	2C/A8.10 -- 4C/A8.10	5	20 MIN.	
1142A	2'-10"x7'-0"	D2	HM	F3	4C/A8.10	2C/A8.10 -- 4C/A8.10	6		1.
1143	3'-0"x7'-0"	D1	HM	F3	4C/A8.10	2C/A8.10 -- 4C/A8.10	5	20 MIN.	
1143A	2'-10"x7'-0"	D2	HM	F3	4C/A8.10	2C/A8.10 -- 4C/A8.10	6		1.
1144	3'-0"x7'-0"	D1	HM	F3	4C/A8.10	2C/A8.10 -- 4C/A8.10	5	20 MIN.	
1144A	2'-10"x7'-0"	D2	HM	F3	4C/A8.10	2C/A8.10 -- 4C/A8.10	6		1.
1145	3'-0"x7'-0"	D1	HM	F3	4C/A8.10	2C/A8.10 -- 4C/A8.10	5	20 MIN.	
1145A	2'-10"x7'-0"	D2	HM	F3	4C/A8.10	2C/A8.10 -- 4C/A8.10	6		1.
1146	3'-0"x7'-0"	D1	HM	F3	4C/A8.10	2C/A8.10 -- 4C/A8.10	5	20 MIN.	
1146A	2'-10"x7'-0"	D2	HM	F3	4C/A8.10	2C/A8.10 -- 4C/A8.10	6		1.
1147	3'-0"x7'-0"	D1	HM	F3	4C/A8.10	2C/A8.10 -- 4C/A8.10	5	20 MIN.	
1147A	2'-10"x7'-0"	D2	HM	F3	4C/A8.10	2C/A8.10 -- 4C/A8.10	6		1.
1148	3'-0"x7'-0"	D1	HM	F3	4C/A8.10	2C/A8.10 -- 4C/A8.10	5	20 MIN.	
1148A	2'-10"x7'-0"	D2	HM	F3	4C/A8.10	2C/A8.10 -- 4C/A8.10	6		1.
1149	3'-0"x7'-0"	D1	HM	F3	2B/A8.10	2B/A8.10	2	20 MIN.	
1150	3'-0"x7'-0"	D3	ALUM	ALUM	5A/5.11 SIM	SIM 5A/5.14	7		5.
1150A	3'-0"x7'-10"	D7	HM	F3	4C/A8.10	2C/A8.10 -- 4C/A8.10	3	20 MIN.	
104	3'-0"x7'-0"	D5	HM	F3	4C/A8.10	4C/A8.10	11	1-1/2 HR	4.
105	3'-0"x7'-0"	D7	HM	F3	4C/A8.10	2C/A8.10 -- 4C/A8.10	3	1-1/2 HR	

Second, Third, and Fourth Floor

DOOR NO.	DOOR SIZE	DOOR TYPE	FRAME	FRAME TYPE	HEAD DTL	JAMB DTL	HARDWARE GROUP	RATING	REMARKS
2111 3111 4111	3'-0"x7'-0"	D1	HM	F3	4C/A8.10	2C/A8.10 -- 4C/A8.10	5	20 MIN.	
2111A 3111A 4111A	2'-10"x7'-0"	D2	HM	F3	4C/A8.10	2C/A8.10 -- 4C/A8.10	6		1., 7. for 2111A 1., 8. for 3111A 1., 9. for 4111A
2112 3112 4112	3'-0"x7'-0"	D1	HM	F3	4C/A8.10	2C/A8.10 -- 4C/A8.10	1	20 MIN.	
2113 3113 4113	3'-0"x7'-0"	D1	HM	F3	4C/A8.10	2C/A8.10 -- 4C/A8.10	5	20 MIN.	
2113A 3113A 4113A	2'-10"x7'-0"	D2	HM	F3	4C/A8.10	2C/A8.10 -- 4C/A8.10	6		1., 7. for 2113A 1., 8. for 3113A 1., 9. for 4113A
2114 3114 4114	3'-0"x7'-0"	D1	HM	F3	4C/A8.10	2C/A8.10 -- 4C/A8.10	2	20 MIN.	
2115 3115 4115	PR 3'-0"x7'-0"	D1	HM	F3	4C/A8.10	4C/A8.10	11	20 MIN.	4.
2119 3119 4119	3'-0"x7'-0"	D1	HM	F3	4C/A8.10	2C/A8.10 -- 4C/A8.10	5	20 MIN.	
2119A 3119A 4119A	2'-10"x7'-0"	D2	HM	F3	4C/A8.10	2C/A8.10 -- 4C/A8.10	6		1.
2120 3120 4120	3'-0"x7'-0"	D1	HM	F3	4C/A8.10	2C/A8.10 -- 4C/A8.10	5	20 MIN.	
2120A 3120A 4120A	2'-10"x7'-0"	D2	HM	F3	4C/A8.10	2C/A8.10 -- 4C/A8.10	6		1., 7. for 2120A 1., 8. for 3120A 1., 9. for 4120A
2121 3121 4121	3'-0"x7'-0"	D1	HM	F3	4C/A8.10	2C/A8.10 -- 4C/A8.10	5	20 MIN.	
2121A 3121A 4121A	2'-10"x7'-0"	D2	HM	F3	4C/A8.10	2C/A8.10 -- 4C/A8.10	6		1.
2122 3122 4122	3'-0"x7'-0"	D1	HM	F3	4C/A8.10	2C/A8.10 -- 4C/A8.10	5	20 MIN.	
2122A 3122A 4122A	2'-10"x7'-0"	D2	HM	F3	4C/A8.10	2C/A8.10 -- 4C/A8.10	6		1., 7. for 2122A 1., 8. for 3122A 1., 9. for 4122A
2123 3123 4123	3'-0"x7'-0"	D1	HM	F3	4C/A8.10	2C/A8.10 -- 4C/A8.10	5	20 MIN.	
2123A 3123A 4123A	2'-10"x7'-0"	D2	HM	F3	4C/A8.10	2C/A8.10 -- 4C/A8.10	6		1.
2124 3124 4124	3'-0"x7'-0"	D1	HM	F3	4C/A8.10	2C/A8.10 -- 4C/A8.10	5	20 MIN.	
2124A 3124A 4124A	2'-10"x7'-0"	D2	HM	F3	4C/A8.10	2C/A8.10 -- 4C/A8.10	6		1., 7. for 2124A 1., 8. for 3124A 1., 9. for 4124A
2125 3125 4125	3'-0"x7'-0"	D1	HM	F3	4C/A8.10	2C/A8.10 -- 4C/A8.10	5	20 MIN.	
2125A 3125A 4125A	3'-0"x7'-0"	D2	HM	F3	4C/A8.10	2C/A8.10 -- 4C/A8.10	6		1.
2126 3126 4126	3'-0"x7'-0"	D1	HM	F3	4C/A8.10	2C/A8.10 -- 4C/A8.10	5	20 MIN.	
2126A 3126A 4126A	2'-10"x7'-0"	D2	HM	F3	4C/A8.10	2C/A8.10 -- 4C/A8.10	6		1., 7. for 2126A 1., 8. for 3126A 1., 9. for 4126A
2127 3127 4127	3'-0"x7'-0"	D1	HM	F3	4C/A8.10	2C/A8.10 -- 4C/A8.10	1	20 MIN.	
2128 3128 4128	3'-0"x7'-0"	D1	HM	F3	4C/A8.10	2C/A8.10 -- 4C/A8.10	5	20 MIN.	
2128A 3128A 4128A	2'-10"x7'-0"	D2	HM	F3	4C/A8.10	2C/A8.10 -- 4C/A8.10	6		1.
2128B 3128B 4128B	3'-0"x7'-0"	D2	HM	F3	4C/A8.10	2C/A8.10 -- 4C/A8.10	3-NR		1.
2128C 3128C 4128C	PR 1'-6"x7'-0"	D2	HM	F3	4C/A8.10	4C/A8.10	10		SEE ELEVATION 3D/A7.6
2129 3129 4129	3'-0"x7'-0"	D1	HM	F3	4C/A8.10	2B/A8.10 & 2C/A8.10	1	20 MIN.	SIZE H. M. FRAME DEPTH FOR GYP. BD. WALL
2130 3130 4130	3'-0"x7'-0"	D1	HM	F3	4C/A8.10	2C/A8.10 -- 4C/A8.10	5	20 MIN.	
2130A 3130A 4130A	2'-10"x7'-0"	D2	HM	F3	4C/A8.10	2C/A8.10 -- 4C/A8.10	6		1.
2131 3131 4131	3'-0"x7'-0"	D1	HM	F3	4C/A8.10	2C/A8.10 -- 4C/A8.10	2	20 MIN.	
2132 3132 4132	3'-0"x7'-0"	D1	HM	F3	4C/A8.10	2C/A8.10 -- 4C/A8.10	5	20 MIN.	
2132A 3132A 4132A	2'-10"x7'-0"	D2	HM	F3	4C/A8.10	2C/A8.10 -- 4C/A8.10	6		1.
2133 3133 4133	3'-0"x7'-0"	D1	HM	F3	4C/A8.10	2C/A8.10 -- 4C/A8.10	5	20 MIN.	
2133A 3133A 4133A	2'-10"x7'-0"	D2	HM	F3	4C/A8.10	2C/A8.10 -- 4C/A8.10	6		1.
2134 3134 4134	3'-0"x7'-0"	D1	HM	F3	4C/A8.10	2C/A8.10 -- 4C/A8.10	5	20 MIN.	
2134A 3134A 4134A	2'-10"x7'-0"	D2	HM	F3	4C/A8.10	2C/A8.10 -- 4C/A8.10	6		1.
2135 3135 4135	3'-0"x7'-0"	D1	HM	F3	4C/A8.10	2C/A8.10 -- 4C/A8.10	5	20 MIN.	
2135A 3135A 4135A	2'-10"x7'-0"	D2	HM	F3	4C/A8.10	2C/A8.10 -- 4C/A8.10	6		1.
2136 3136 4136	3'-0"x7'-0"	D1	HM	F3	4C/A8.10	2C/A8.10 -- 4C/A8.10	5	20 MIN.	
2136A 3136A 4136A	2'-10"x7'-0"	D2	HM	F3	4C/A8.10	2C/A8.10 -- 4C/A8.10	6		1.
2137 3137 4137	3'-0"x7'-0"	D1	HM	F3	4C/A8.10	2C/A8.10 -- 4C/A8.10	5	20 MIN.	
2137A 3137A 4137A	2'-10"x7'-0"	D2	HM	F3	4C/A8.10	2C/A8.10 -- 4C/A8.10	6		1.

Second, Third, and Fourth Floor (cont.)

DOOR NO.	DOOR SIZE	DOOR TYPE	FRAME	FRAME TYPE	HEAD DTL	JAMB DTL	HARDWARE GROUP	RATING	REMARKS
2138 3138 4138	3'-0"x7'-0"	D1	HM	F3	4C/A8.10	2C/A8.10 -- 4C/A8.10	5	20 MIN.	
2138A 3138A 4138A	2'-10"x7'-0"	D2	HM	F3	4C/A8.10	2C/A8.10 -- 4C/A8.10	6		1.
2139 3139 4139	3'-0"x7'-0"	D1	HM	F3	4C/A8.10	2C/A8.10 -- 4C/A8.10	5	20 MIN.	
2139A 3139A 4139A	2'-10"x7'-0"	D2	HM	F3	4C/A8.10	2C/A8.10 -- 4C/A8.10	6		1.
2140 3140 4140	3'-0"x7'-0"	D1	HM	F3	4C/A8.10	2C/A8.10 -- 4C/A8.10	5	20 MIN.	
2140A 3140A 4140A	2'-10"x7'-0"	D2	HM	F3	4C/A8.10	2C/A8.10 -- 4C/A8.10	6		1.
2141 3141 4141	3'-0"x7'-0"	D1	HM	F3	4C/A8.10	2C/A8.10 -- 4C/A8.10	5	20 MIN.	
2141A 3141A 4141A	2'-10"x7'-0"	D2	HM	F3	4C/A8.10	2C/A8.10 -- 4C/A8.10	6		1.
2142 3142 4142	3'-0"x7'-0"	D1	HM	F3	4C/A8.10	2C/A8.10 -- 4C/A8.10	5	20 MIN.	
2142A 3142A 4142A	2'-10"x7'-0"	D2	HM	F3	4C/A8.10	2C/A8.10 -- 4C/A8.10	6		1.
2143 3143 4143	3'-0"x7'-0"	D1	HM	F3	4C/A8.10	2C/A8.10 -- 4C/A8.10	5	20 MIN.	
2143A 3143A 4143A	2'-10"x7'-0"	D2	HM	F3	4C/A8.10	2C/A8.10 -- 4C/A8.10	6		1.
2144 3144 4144	3'-0"x7'-0"	D1	HM	F3	4C/A8.10	2C/A8.10 -- 4C/A8.10	5	20 MIN.	
2144A 3144A 4144A	2'-10"x7'-0"	D2	HM	F3	4C/A8.10	2C/A8.10 -- 4C/A8.10	6		1.
2145 3145 4145	3'-0"x7'-0"	D1	HM	F3	4C/A8.10	2C/A8.10 -- 4C/A8.10	5	20 MIN.	
2145A 3145A 4145A	2'-10"x7'-0"	D2	HM	F3	4C/A8.10	2C/A8.10 -- 4C/A8.10	6		1.
2146 3146 4146	3'-0"x7'-0"	D1	HM	F3	4C/A8.10	2C/A8.10 -- 4C/A8.10	5	20 MIN.	
2146A 3146A 4146A	2'-10"x7'-0"	D2	HM	F3	4C/A8.10	2C/A8.10 -- 4C/A8.10	6		1.
2147 3147 4147	3'-0"x7'-0"	D1	HM	F3	4C/A8.10	2C/A8.10 -- 4C/A8.10	5	20 MIN.	
2147A 3147A 4147A	2'-10"x7'-0"	D2	HM	F3	4C/A8.10	2C/A8.10 -- 4C/A8.10	6		1.
2148 3148 4148	3'-0"x7'-0"	D1	HM	F3	4C/A8.10	2C/A8.10 -- 4C/A8.10	5	20 MIN.	
2148A 3148A 4148A	2'-10"x7'-0"	D2	HM	F3	4C/A8.10	2C/A8.10 -- 4C/A8.10	6		1.
2149 3149 4149	3'-0"x7'-0"	D1	HM	F3	2B/A8.10	2B/A8.10	2	20 MIN.	
2151 3151 4151	3'-0"x7'-10"	D3	ALUM	ALUM	5A/A5.11	1B/5.14 & 3D/A5.14 SIM SIM	7		5.
204 304 404	PR 3'-0"x7'-0"	D5	HM	F3	4C/A8.10	4C/A8.10	11	1-1/2 HR	4.
205 305 405	3'-0"x7'-0"	D7	HM	F3	4C/A8.10	2C/A8.10 -- 4C/A8.10	3	1-1/2 HR	

Second Floor – Phase One Building – Bid Option 10

DOOR NO.	DOOR SIZE	DOOR TYPE	FRAME	FRAME TYPE	HEAD DTL	JAMB DTL	HARDWARE GROUP	RATING	REMARKS
2001A	2'-10"x7'-0"	D2	HM	F3	4C/A8.10	2C/A8.10 -- 4C/A8.10	6		10.
2002A	2'-10"x7'-0"	D2	HM	F3	4C/A8.10	2C/A8.10 -- 4C/A8.10	6		10.
2003A	2'-10"x7'-0"	D2	HM	F3	4C/A8.10	2C/A8.10 -- 4C/A8.10	6		10.
2010A	2'-10"x7'-0"	D2	HM	F3	4C/A8.10	2C/A8.10 -- 4C/A8.10	6		10.
2011A	2'-10"x7'-0"	D2	HM	F3	4C/A8.10	2C/A8.10 -- 4C/A8.10	6		10.
2012A	2'-10"x7'-0"	D2	HM	F3	4C/A8.10	2C/A8.10 -- 4C/A8.10	6		10.
2013A	2'-10"x7'-0"	D2	HM	F3	4C/A8.10	2C/A8.10 -- 4C/A8.10	6		10.
2014A	2'-10"x7'-0"	D2	HM	F3	4C/A8.10	2C/A8.10 -- 4C/A8.10	6		10.
2015A	2'-10"x7'-0"	D2	HM	F3	4C/A8.10	2C/A8.10 -- 4C/A8.10	6		10.
2016A	2'-10"x7'-0"	D2	HM	F3	4C/A8.10	2C/A8.10 -- 4C/A8.10	6		10.
2017A	2'-10"x7'-0"	D2	HM	F3	4C/A8.10	2C/A8.10 -- 4C/A8.10	6		10.
2018A	2'-10"x7'-0"	D2	HM	F3	4C/A8.10	2C/A8.10 -- 4C/A8.10	6		10.

THE FOLLOWING TWELVE (12) DOORS BETWEEN CORRIDORS AND GUEST ROOMS ARE EXISTING:

2001, 2002, 2003,
2010, 2011, 2012,
2013, 2014, 2015, 2016, 2017, 2018

THESE TWELVE DOORS HAVE BEEN FINISHED WITH HARDWARE. CONTRACTOR SHALL PROTECT THESE EXISTING DOORS DURING CONSTRUCTION AND SHALL REPAIR DOORS AND/OR HARDWARE IF DAMAGED DURING CONSTRUCTION.

DOOR REMARKS

1. PROVIDE 19 [3/4"] UNDERCUT
2. NOT USED.
3. FIRE DOORS ARE TO BE ACTIVATED BY ADJACENT SMOKE DETECTORS TIED TO FIRE ALARM SYSTEM.
4. DOORS ON MAGNETIC HOLD-OPENS ARE TO BE ACTIVATED BY ADJACENT SMOKE DETECTORS TIED TO FIRE ALARM SYSTEM.
5. INSULATED ALUMINUM DOOR WITH THERMALLY CLAD STILE AND RAIL, FULLY GLAZED.
6. INSTALL FINISHED DOORS AND HARDWARE INDICATED ON FIRST FLOOR UNDER BID OPTION 6.
7. INSTALL FINISHED DOOR AND HARDWARE INDICATED ON SECOND FLOOR UNDER BID OPTION 7.
8. INSTALL FINISHED DOOR AND HARDWARE INDICATED ON THIRD FLOOR UNDER BID OPTION 8.
9. INSTALL FINISHED DOOR AND HARDWARE INDICATED ON FOURTH FLOOR UNDER BID OPTION 9.
10. INSTALL FINISHED DOOR AND HARDWARE INDICATED ON SECOND FLOOR OF PHASE ONE BUILDING UNDER BID OPTION 10.

DOOR TYPES

D1 – WOOD VENEER 44 [1 3/4"] THICK
D2 – WOOD PAINTED 44 [1 3/4"] THICK
D3 – ALUMINUM WITH TEMPERED GLASS
D4 – NOT USED
D5 – HOLLOW METAL 44 [1 3/4"]
D6 – OVERHEAD COILING FIRE DOOR
D7 – WOOD VENEER 44 [1 3/4"] THICK WITH 100 X 600 [4 X 24"] VISION PANEL WITH WIRE GLASS

5A DOOR AND FRAME SCHEDULE

I hereby certify this drawing was prepared by me or under my direct supervision and that I am a duly registered architect under the laws of the State of Minnesota.

For: Architectural Alliance
By:
Title: Principal
Registration No: 16854

ALL SCALES SHOWN ARE BASED ON A STANDARD DRAWING SIZE OF 28" X 40" OR METRIC DRAWING SIZE OF 841mm X 594mm. IF ANY OTHER SIZE DRAWINGS ARE FURNISHED OR PLOTTED THE CONTRACTOR SHALL ADJUST THE SCALES ACCORDINGLY. THE CONTRACTOR SHALL ALSO ADVISE HIS SUB-CONTRACTORS OF THE ABOVE.

Revisions

Symbol	Descriptions	Date	Approved

Architect: ARCHITECTURAL ALLIANCE MINNEAPOLIS, MINNESOTA

Engineer: MEAD & HUNT MADISON, WISCONSIN

U.S. ARMY ENGINEER DISTRICT CORPS OF ENGINEERS OMAHA, NEBRASKA

Designed by: SS
Drawn by: SS/JM
Checked by: PS
Reviewed by: EO
Submitted by:

MINNEAPOLIS–ST.PAUL AFR — MINNESOTA

CONSOLIDATED LODGING FACILITY
– PHASE THREE –

DOOR SCHEDULE

Plot Scale Ratio: 1: 1
Design File:
Spec. No.: DACA 45-02-B-0008
Contract No.: DACA xx-xx-x-xxxx
Date: 2-14-2002
Drawing Code: AF 721-315-03
Sheet reference number: A8.5

QJKL-990011P3

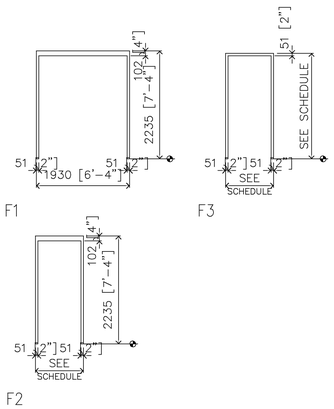

5D HOLLOW METAL FRAME TYPES
1:50

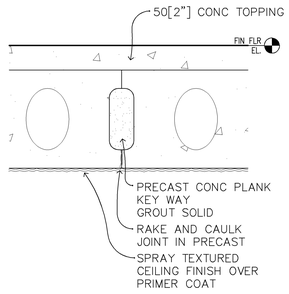

4C PRECAST PLANK JOINT AT EXPOSED CEILING
1:5M

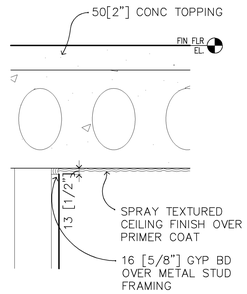

3D GYP BD TO PRECAST PLANK
1:5

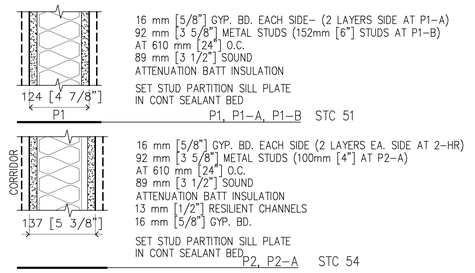

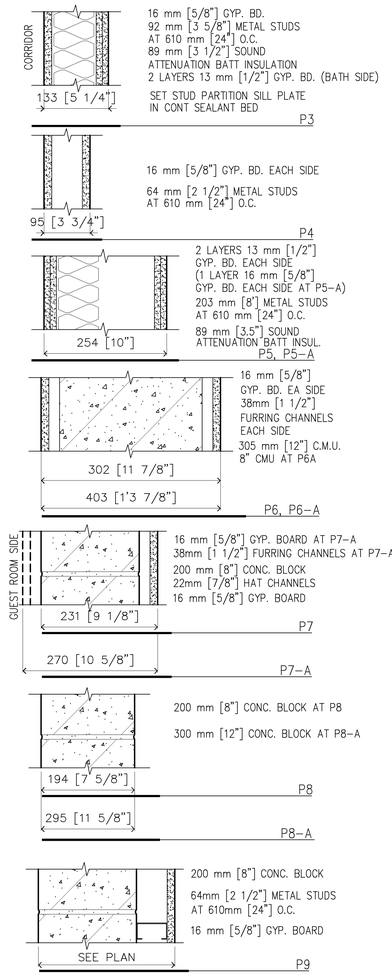

1B PARTITION TYPES
1:5

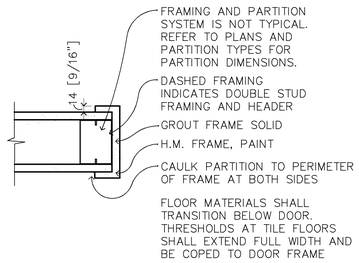

5C FLUSH FACE FRAME HEAD/JAMB DETAIL
1:5M

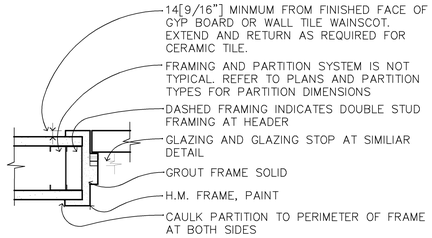

4C TYPCIAL H.M. HEAD / JAMB DETAIL
1:5M

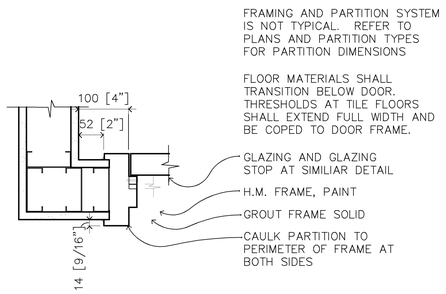

3C TYPICAL H.M. JAMB DETAIL AT DOOR AND SIDELIGHT
1:5M

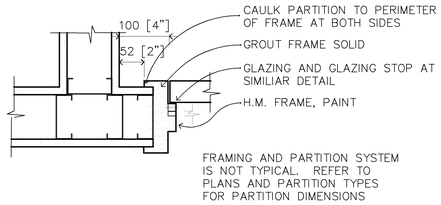

2C TYPICAL H.M. JAMB DETAIL
1:5M

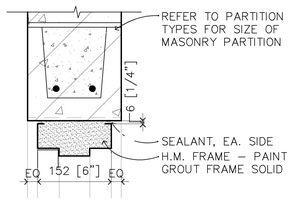

5B HOLLOW METAL HEAD DETAIL AT CMU
1:5M

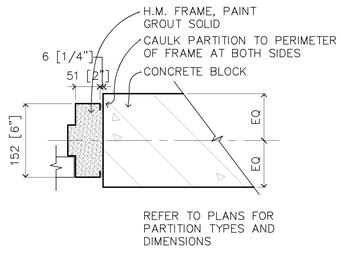

4B HOLLOW METAL JAMB DETAIL AT CMU
1:5M

3B NOT USED
1:5M

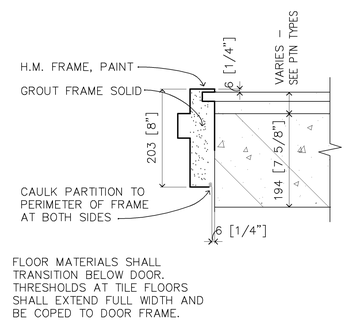

2B HOLLOW METAL FRAME HEAD AND JAMB
1:5M

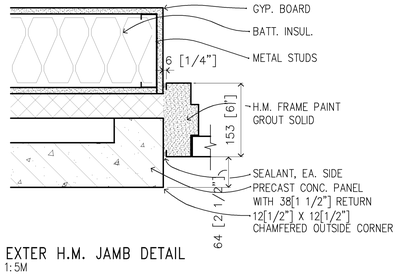

5A EXTER H.M. JAMB DETAIL
1:5M

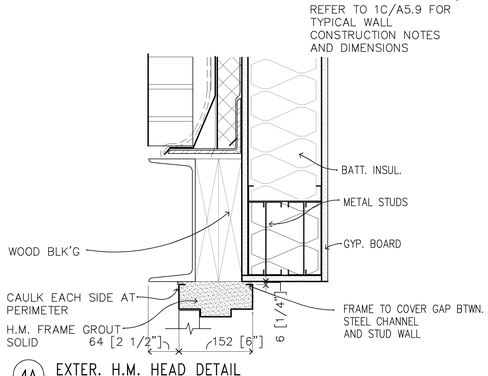

4A EXTER. H.M. HEAD DETAIL
1:5M

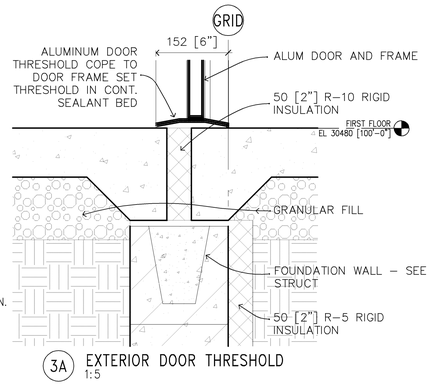

3A EXTERIOR DOOR THRESHOLD
1:5

2000 1000 0 2000 4000
SCALE: 1 : 50

200 100 0 200 400
SCALE: 1 : 5

NOTES:
1. PROVIDE CONTINUOUS SEALANT AT SILL PLATES
2. REFER TO DETAILS 1C/A8.11 & 1D/A8.11 FOR SOUND ATTENUATION DETAILS AT PARTITION
3. PARTITIONS SHALL BE P1 1HR UNLESS NOTED OTHERWISE ON PLANS

I hereby certify this drawing was prepared by me or under my direct supervision and that I am a duly registered architect under the laws of the State of Minnesota.

For: Architectural Alliance
By:
Title: Principal
Registration No: 16854

ALL SCALES SHOWN ARE BASED ON A STANDARD DRAWING SIZE OF 28" X 40" OR METRIC DRAWING SIZE OF 841mm X 594mm. IF ANY OTHER SIZE DRAWINGS ARE FURNISHED OR PLOTTED THE CONTRACTOR SHALL ADJUST THE SCALES ACCORDINGLY. THE CONTRACTOR SHALL ALSO ADVISE HIS SUB–CONTRACTORS OF THE ABOVE.

Revisions			
Symbol	Descriptions	Date	Approved

Architect: ARCHITECTURAL ALLIANCE MINNEAPOLIS, MINNESOTA	Engineer: MEAD & HUNT MADISON, WISCONSIN	U.S. ARMY ENGINEER DISTRICT CORPS OF ENGINEERS OMAHA, NEBRASKA

Designed by: SS
Drawn by: SS/JM
Checked by: PS
Reviewed by: EO
Submitted by:

MINNEAPOLIS–ST.PAUL AFR — MINNESOTA

CONSOLIDATED LODGING FACILITY
– PHASE THREE –

PARTITION TYPES FRAME TYPES and DETAILS

Plot Scale Ratio: 1: 1
Design File: 9941AB10
Date: 2–14–2002
Sheet reference number:
Spec. No.: DACA 45–02–B–0008
Drawing Code: AF 721–315–03
Contract No.: DACA xx–xx–x–xxxx
A8.10

QJKL-990011P3

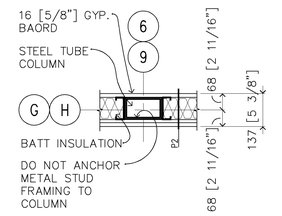

5D PLAN DETAIL AT INTERIOR COLUMN
1:10

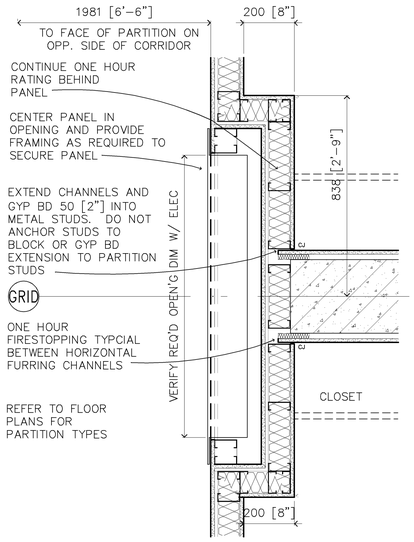

4C RECESSED ELECTRICAL PANEL
1:10

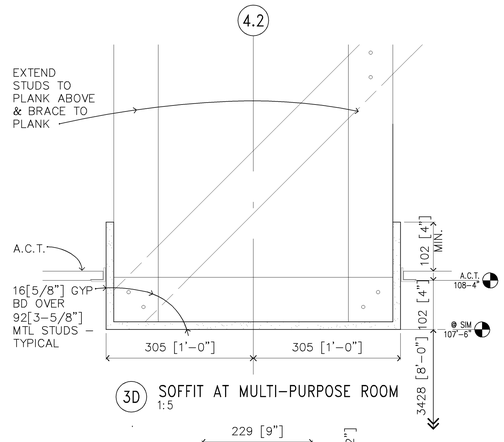

3D SOFFIT AT MULTI-PURPOSE ROOM
1:5

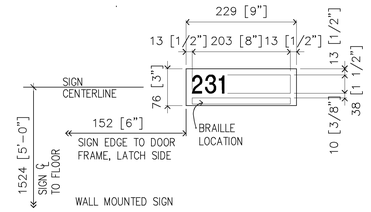

3C IDENTIFICATION SIGN TYPE BB4
1:5

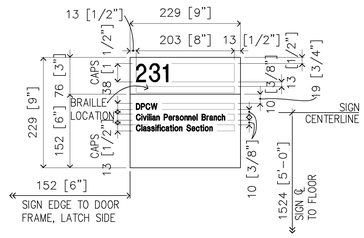

WALL MOUNTED SIGN

2D IDENTIFICATION SIGN TYPE BB2
1:5

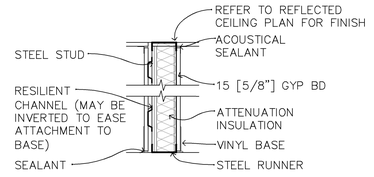

1D TOP & BOTTOM PLATES AT PARTITION P-2 & P-2A
1:10

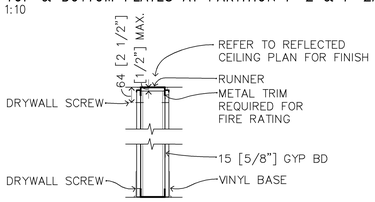

1C TOP & BOTTOM PLATES AT PARTITION P1
1:10

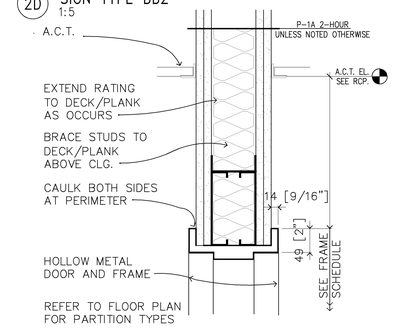

2C HOLLOW METAL DOOR HEAD / SOFFIT
1:5

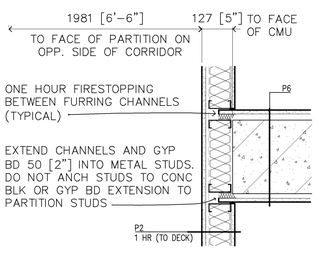

5B TYPICAL CORRIDOR WALL INTERSECTION
1:10

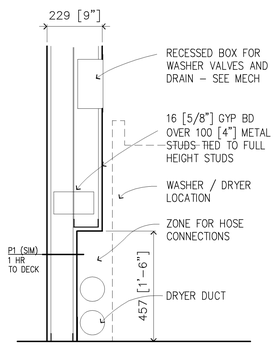

4B WALL AT LAUNDRY ROOM
1:10

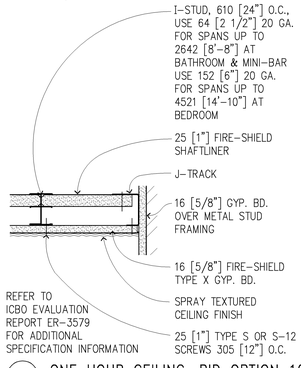

3B ONE HOUR CEILING, BID OPTION 10
1:5

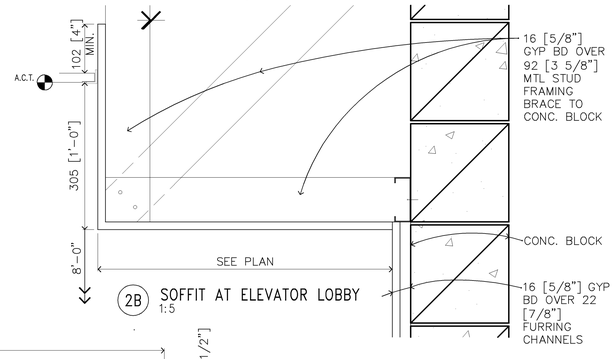

2B SOFFIT AT ELEVATOR LOBBY
1:5

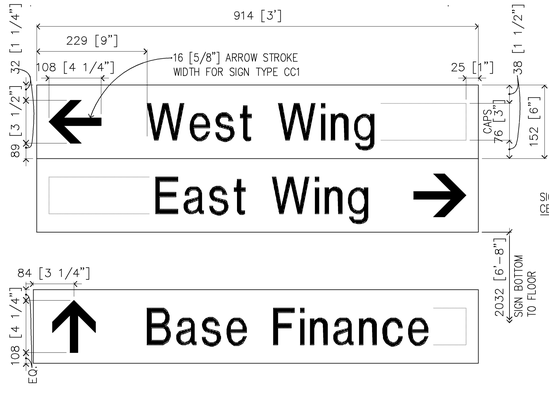

CEILING HUNG SIGN

3A DIRECTION SIGN TYPE CC1
1:5

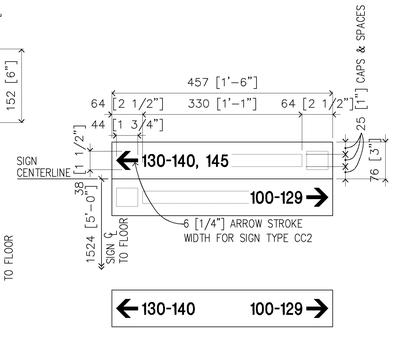

WALL MOUNTED SIGN

2A DIRECTION SIGN TYPE CC2
1:5

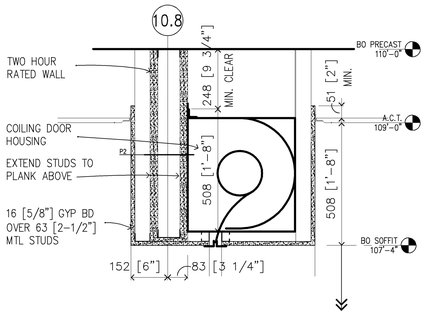

5A SOFFIT AT OVERHEAD COILING DOOR
1:10

200 100 0 200 400
SCALE: 1 : 5

400 200 0 400 800
SCALE: 1 : 10

ALL SCALES SHOWN ARE BASED ON A STANDARD DRAWING SIZE OF 28" X 40" OR METRIC DRAWING SIZE OF 841mm X 594mm. IF ANY OTHER SIZE DRAWINGS ARE FURNISHED OR PLOTTED THE CONTRACTOR SHALL ADJUST THE SCALES ACCORDINGLY. THE CONTRACTOR SHALL ALSO ADVISE HIS SUB-CONTRACTORS OF THE ABOVE.

I hereby certify this drawing was prepared by me or under my direct supervision and that I am a duly registered architect under the laws of the State of Minnesota.

For: Architectural Alliance
By:
Title: Principal
Registration No: 16854

Revisions

Symbol	Descriptions	Date	Approved

Architect: ARCHITECTURAL ALLIANCE MINNEAPOLIS, MINNESOTA

Engineer: MEAD & HUNT MADISON, WISCONSIN

U.S. ARMY ENGINEER DISTRICT CORPS OF ENGINEERS OMAHA, NEBRASKA

MINNEAPOLIS-ST.PAUL AFR — MINNESOTA

CONSOLIDATED LODGING FACILITY
- PHASE THREE -

INTERIOR DETAILS & SIGNAGE

Designed by: JM/PS
Drawn by: JM/JC
Checked by: PS
Reviewed by: EO
Submitted by:

Plot Scale Ratio: 1: 1
Design File: 9941AB11
Date: 2-14-2002
Spec. No.: DACA 45-02-B-0008
Contract No.: DACA xx-xx-x-xxxx
Drawing Code: AF 721-315-03
Sheet reference number: A8.11

QJKL-990011P3

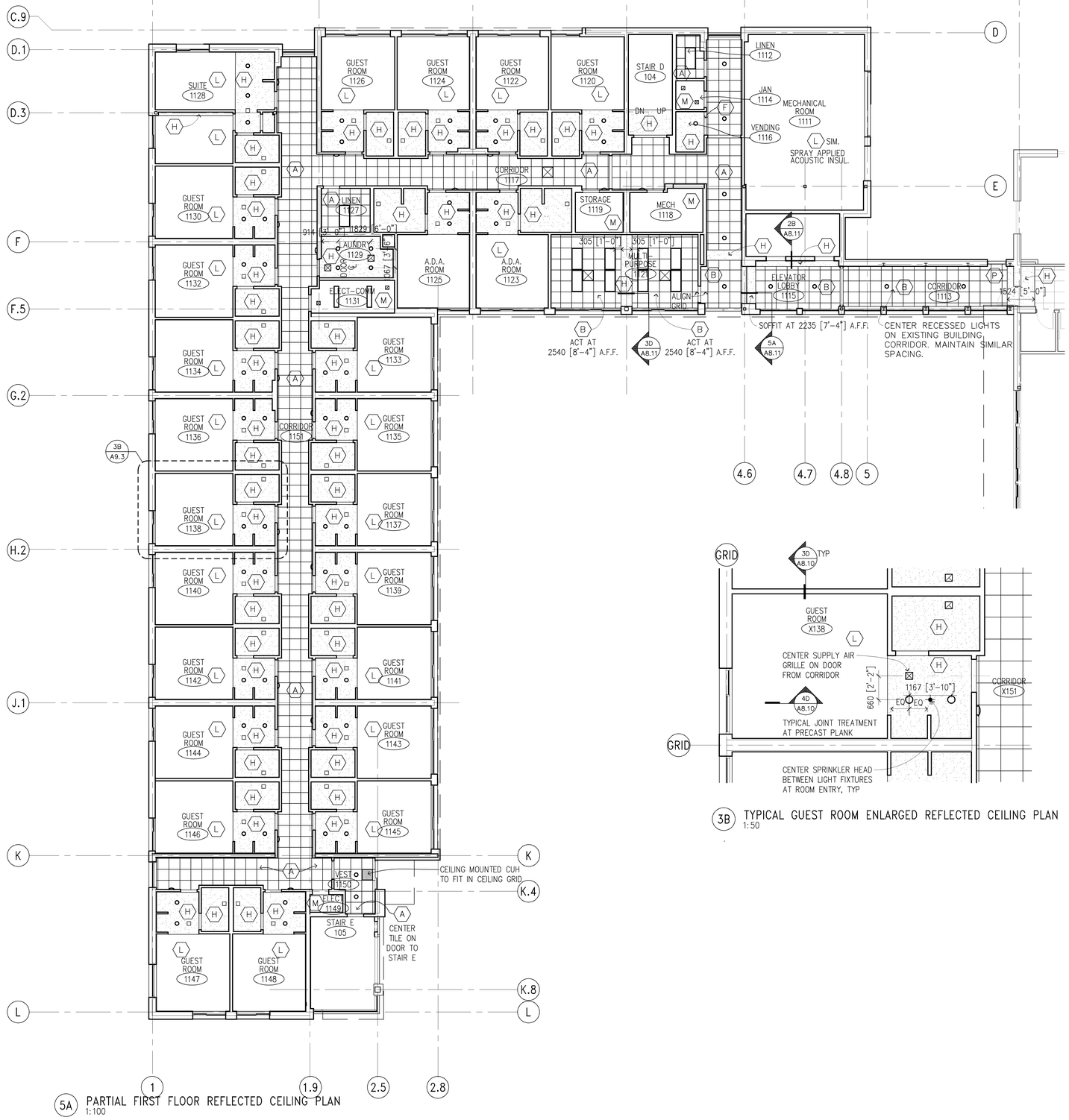

5A PARTIAL FIRST FLOOR REFLECTED CEILING PLAN
1:100

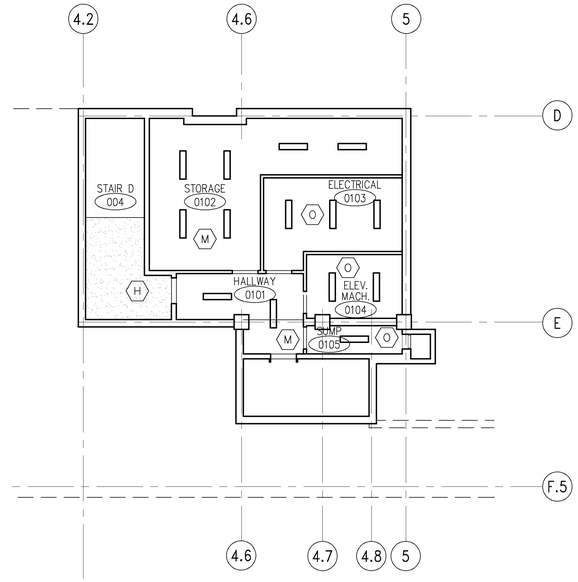

2C BASEMENT REFLECTED CEILING PLAN
1:100

3B TYPICAL GUEST ROOM ENLARGED REFLECTED CEILING PLAN
1:50

CEILING PLAN KEY NOTES

- (A) 610mm [24"] SQ. ACOUSTICAL TILE, CEILING HEIGHT 2438 [8'-0"]
- (B) 610mm [24"] SQ. ACOUSTICAL TILE, CEILING HEIGHT 2743 [9'-0"]
- (C) NOT USED PHASE 3
- (D) NOT USED PHASE 3
- (E) NOT USED PHASE 3
- (F) PAINTED GYPSUM BOARD, CEILING HEIGHT 2413 [7'-0"]
- (G) NOT USED PHASE 3
- (H) PAINTED GYPSUM BOARD, CEILING HEIGHT 2438 [8'-0"]
- (J) NOT USED PHASE 3
- (K) NOT USED PHASE 3
- (L) CONCRETE PLANK, SPRAYED FINISH CEILING HEIGHT 2997 [9'-10"]
- (M) CONCRETE PLANK, PAINTED CEILING HEIGHT 2997 [9'-10"]
- (N) GYPSUM BOARD WITH SPRAY FINISH CEILING HEIGHT 2743 [9'-0"]
- (O) CONCRETE PLANK, UNFINISHED CEILING HEIGHT 2997 [9'-10"]
- (P) ALIGN CEILING TILE GRID PATTERN WITH PHASE ONE CEILING TILE GRID
- (Q) NOT USED PHASE 3

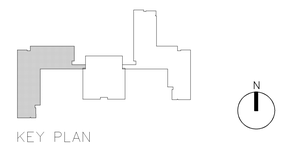

2000 1000 0 2000 4000
SCALE: 1 : 50

4000 2000 0 4000 8000
SCALE: 1 : 100

I hereby certify this drawing was prepared by me or under my direct supervision and that I am a duly registered architect under the laws of the State of Minnesota.

For: Architectural Alliance
By:
Title: Principal
Registration No: 16854

ALL SCALES SHOWN ARE BASED ON A STANDARD DRAWING SIZE OF 28" X 40" OR METRIC DRAWING SIZE OF 841mm X 594mm. IF ANY OTHER SIZE DRAWINGS ARE FURNISHED OR PLOTTED THE CONTRACTOR SHALL ADJUST THE SCALES ACCORDINGLY. THE CONTRACTOR SHALL ALSO ADVISE HIS SUB-CONTRACTORS OF THE ABOVE.

Revisions

Symbol	Descriptions	Date	Approved

Architect: ARCHITECTURAL ALLIANCE MINNEAPOLIS, MINNESOTA

Engineer: MEAD & HUNT MADISON, WISCONSIN

U.S. ARMY ENGINEER DISTRICT CORPS OF ENGINEERS OMAHA, NEBRASKA

Designed by: SS
Drawn by: SS/JM
Checked by: PS
Reviewed by: EO
Submitted by:

MINNEAPOLIS-ST.PAUL AFR — MINNESOTA

CONSOLIDATED LODGING FACILITY
– PHASE THREE –

BASEMENT & FIRST FLOOR REFLECTED CEILING PLANS

Plot Scale Ratio: 1: 1
Design File:
Date: 2-14-2002
Sheet reference number: A9.3
Spec. No.: DACA 45-02-B-0008
Contract No.: DACA xx-xx-x-xxxx
Drawing Code: AF 721-315-03

QJKL-990011P3

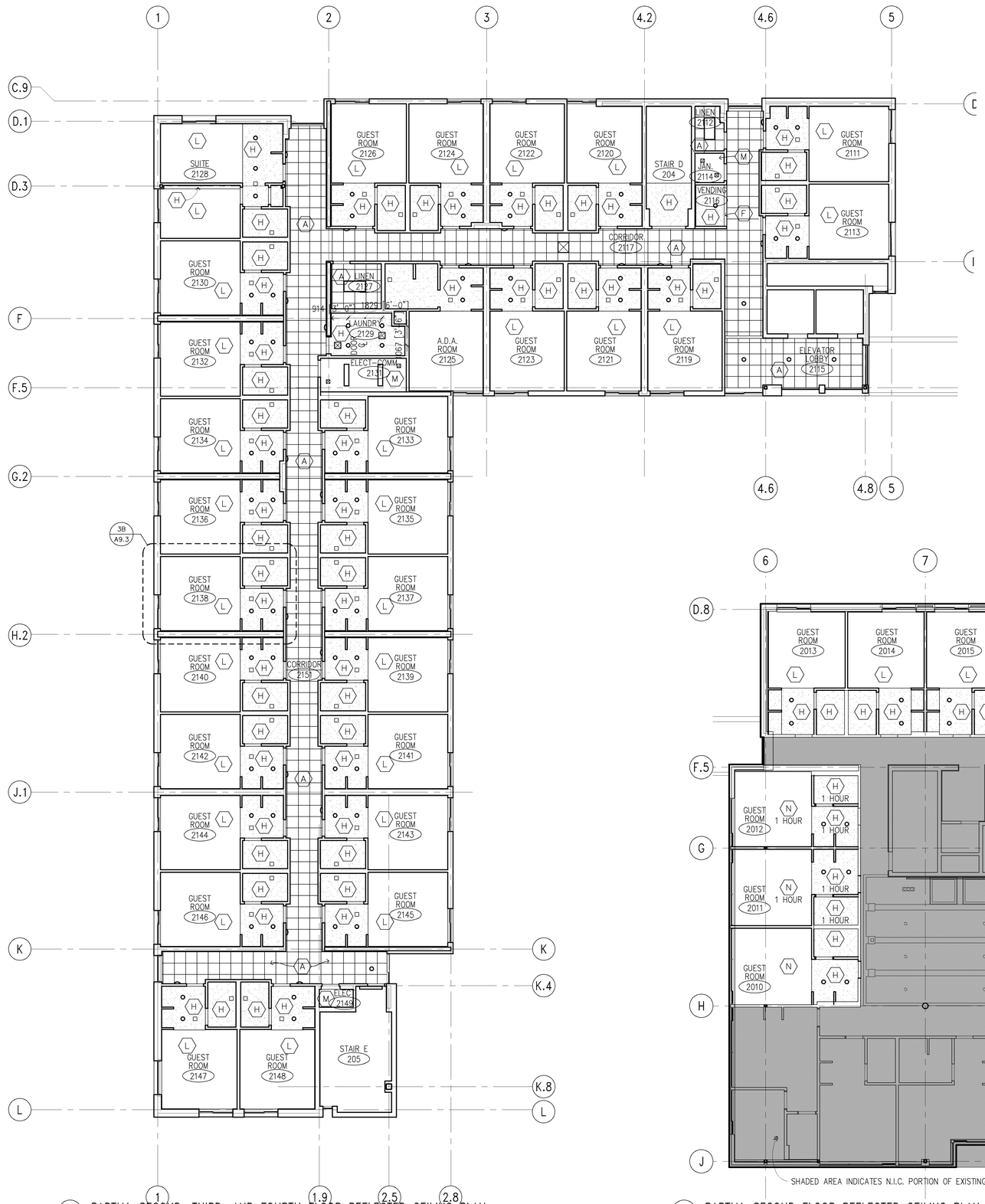

5A PARTIAL SECOND, THIRD, AND FOURTH FLOOR REFLECTED CEILING PLAN
1:100

3A PARTIAL SECOND FLOOR REFLECTED CEILING PLAN, PHASE ONE – BID OPTION 10
1:100

CEILING PLAN KEY NOTES

- (A) 610mm [24"] SQ. ACOUSTICAL TILE, CEILING HEIGHT 2438 [8'-0"]
- (B) 610mm [24"] SQ. ACOUSTICAL TILE, CEILING HEIGHT 2743 [9'-0"]
- (C) NOT USED PHASE 3
- (D) NOT USED PHASE 3
- (E) NOT USED PHASE 3
- (F) PAINTED GYPSUM BOARD, CEILING HEIGHT 2413 [7'-0"]
- (G) NOT USED PHASE 3
- (H) PAINTED GYPSUM BOARD, CEILING HEIGHT 2438 [8'-0"]
- (J) NOT USED PHASE 3
- (K) NOT USED PHASE 3
- (L) CONCRETE PLANK, SPRAYED FINISH CEILING HEIGHT 2997 [9'-10"]
- (M) CONCRETE PLANK, PAINTED CEILING HEIGHT 2997 [9'-10"]
- (N) GYPSUM BOARD WITH SPRAY FINISH CEILING HEIGHT 2743 [9'-0"]
- (O) CONCRETE PLANK, UNFINISHED CEILING HEIGHT 2997 [9'-10"]
- (P) ALIGN CEILING TILE GRID PATTERN WITH PHASE ONE CEILING TILE GRID
- (Q) NOT USED PHASE 3

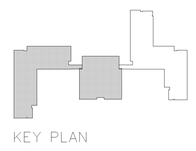

4000 2000 0 4000 8000

SCALE: 1 : 100

I hereby certify this drawing was prepared by me or under my direct supervision and that I am a duly registered architect under the laws of the State of Minnesota.

For: Architectural Alliance
By:
Title: Principal
Registration No: 16854

ALL SCALES SHOWN ARE BASED ON A STANDARD DRAWING SIZE OF 28" X 40" OR METRIC DRAWING SIZE OF 841mm X 594mm. IF ANY OTHER SIZE DRAWINGS ARE FURNISHED OR PLOTTED THE CONTRACTOR SHALL ADJUST THE SCALES ACCORDINGLY. THE CONTRACTOR SHALL ALSO ADVISE HIS SUB-CONTRACTORS OF THE ABOVE.

Revisions

Symbol	Descriptions	Date	Approved

Architect: ARCHITECTURAL ALLIANCE MINNEAPOLIS, MINNESOTA

Engineer: MEAD & HUNT MADISON, WISCONSIN

U.S. ARMY ENGINEER DISTRICT CORPS OF ENGINEERS OMAHA, NEBRASKA

MINNEAPOLIS–ST.PAUL AFR — MINNESOTA

CONSOLIDATED LODGING FACILITY – PHASE THREE –

2nd, 3rd AND 4th FLOOR REFLECTED CEILING PLANS

Designed by: SS
Drawn by: SS/JM
Checked by: PS
Reviewed by: EO
Submitted by:

Plot Scale Ratio: 1: 1
Design File:
Date: 2–14–2002
Spec. No.: DACA 45–02–B–0008
Contract No.: DACA xx–xx–x–xxxx
Drawing Code: AF 721–315–03
Sheet reference number: A9.4

QJKL-990011P3

DESIGNER NOTES

ROOF LIVE LOADS	35 psf AND DRIFTING PROVISIONS
GROUND SNOW LOAD	50 psf
EXPOSURE FACTOR	1.0
FLOOR LIVE LOAD	
GUEST ROOMS AND ADJACENT CORRIDORS	40 psf
FIRST FLOOR CORRIDORS	100 psf
PUBLIC ASSMBLY ROOMS AND ADJACENT CORRIDORS	100 psf
WIND LOAD DATA	
BASIC WIND SPEED	90 mph
EXPOSURE CATEGORY	C
IMPORTANCE FACTOR (CATEGORY II)	1.0
BASIC WIND PRESSURE	23 psf
DESIGN WIND PRESSURE	
STUD WALLS & STUD FRAMED SOFFITS	32 psf
ARCHITECTURAL PRECAST	32 psf
SEISMIC ZONE	0
FOUNDATION DESIGN CRITERIA	
FOOTING DEPTH BELOW GRADE FOR UNHEATED SOIL, ALL SIDES	60 inches
FOOTING DEPTH BELOW GRADE, ADJACENT HEATED SLAB	42 inches
INTERIOR FOOTING DEPTH	BELOW SLAB
ALLOWABLE SOIL PRESSURE	4,000 psf
MODULES OF SUBGRADE REACTION (k)	150 psi per inch

STRUCTURAL MATERIALS

CONCRETE FOOTINGS PIERS SLABS ON GRADE TOPPING SLABS	fc = 3,500 psi
REINFORCING STEEL ASTM A615 GR 60 CONCRETE MASONRY	Fy = 60,000 psi
STRUCTURAL STEEL ASTM A36 BEAMS PLATES BRACING	Fy = 36,000 psi
STRUCTURAL STEEL ASTM A500 Gr.B TS COLUMNS	Fy = 46,000 psi
ALL BOLTS 3/4" DIA. A325 UNLESS NOTED OTHERWISE	
MASONRY DESIGN STRENGTH	f'm = 1,350 psi

I hereby certify this drawing was prepared by me or under my direct supervision and that I am a duly registered architect under the laws of the State of Minnesota.

For: MEAD & HUNT, INC.

By:
Title: PROJECT MANAGER
Registration No: 22452

ALL SCALES SHOWN ARE BASED ON A STANDARD DRAWING SIZE OF 28" X 40" OR METRIC DRAWING SIZE OF 841mm X 594mm. IF ANY OTHER SIZE DRAWINGS ARE FURNISHED OR PLOTTED THE CONTRACTOR SHALL ADJUST THE SCALES ACCORDINGLY. THE CONTRACTOR SHALL ALSO ADVISE HIS SUB-CONTRACTORS OF THE ABOVE.

Revisions

Symbol	Descriptions	Date	Approved

Architect:
ARCHITECTURAL ALLIANCE
MINNEAPOLIS, MINNESOTA

Engineer:
MEAD & HUNT
MADISON, WISCONSIN

U.S. ARMY ENGINEER DISTRICT
CORPS OF ENGINEERS
OMAHA, NEBRASKA

Designed by: JMM
Drawn by: MJE/ACT
Checked by: TLK
Reviewed by: REC
Submitted by:

MINNEAPOLIS-ST.PAUL AFR — MINNESOTA

CONSOLIDATED LODGING FACILITY
– PHASE THREE –

DESIGNER NOTES

Plot Scale Ratio: 1: 1
Design File: 8785S002.DWG
Date: 2-14-2002
Sheet reference number: S0.2
Spec. No.: DACA 45-02-B-0008
Contract No.: DACA
Drawing Code: AF 721-315-03

QJKL-990011P3

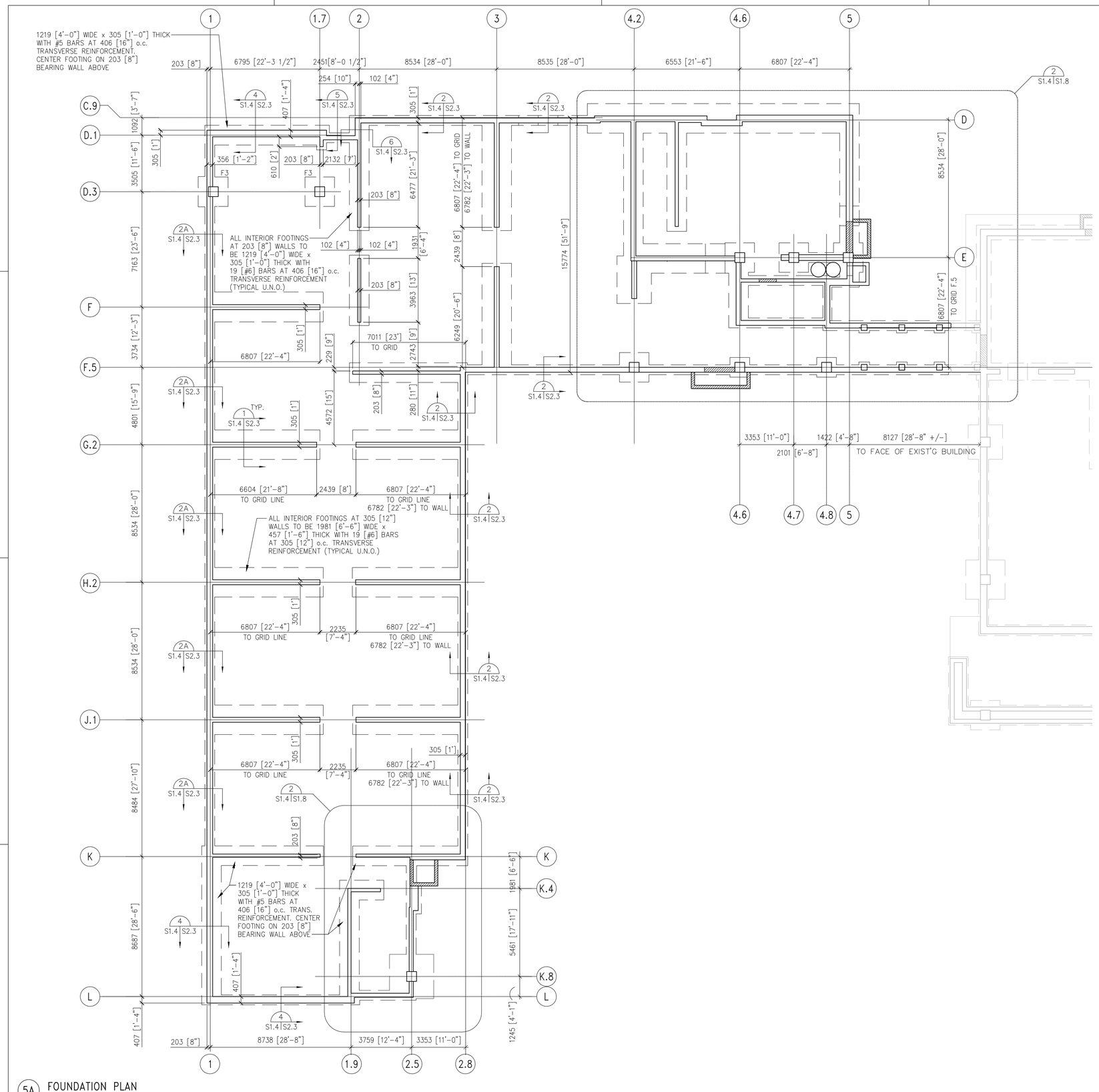

5A FOUNDATION PLAN
1:100

FOUNDATION PLAN GENERAL NOTES:

1. ALL FOOTINGS HAVE A TOP OF FOOTING ELEVATION OF 98,781 [96'-0"] UNLESS NOTED OTHERWISE.
2. ALL FOUNDATION WALLS HAVE A TOP OF WALL ELEVATION OF 100,000 [100'-0"] UNLESS NOTED OTHERWISE.
3. ALL PIERS HAVE A TOP OF PIER ELEVATION OF 99,797 [99'-4"] UNLESS NOTED OTHERWISE.
4. ALL PIER REINFORCING TO BE TERMINATED IN FOOTINGS WITH STANDARD HOOKS AT 76 [3"] ABOVE BOTTOM OF FOOTING.
5. ALL FOUNDATION WALLS TO BE GROUTED SOLID BELOW ELEVATION 100,000 [100'-0"].
6. ALL PERIMETER FOOTINGS NOT NOTED OTHERWISE TO BE 610 [2'-0"] WIDE x 305 [1'-0"] THICK.
7. ALL INTERIOR WALLS 305 [12"] THICK UNLESS NOTED OTHERWISE.
8. PROVIDE PVC PIPE SLEEVES TO ACCOMODATE ALL PLUMBING AND MECHANICAL PENETRATIONS THROUGH FOUNDATION WALLS.
9. ALL GRID LINES REFERENCE CENTER OF BEARING WALL ABOVE OR EDGE OF FOUNDATION WALL AS SHOWN, UNLESS NOTED OTHERWISE.

FOOTING SCHEDULE

FOOTING NUMBER	FOOTING DIMENSIONS (L x W x T)	FOOTING REINFORCEMENT
F1	1219 x 1219 x 356 (4'-0" x 4'-0" x 1'-2")	(5) #5 BARS EACH WAY
F2	1524 x 1524 x 406 (5'-0" x 5'-0" x 1'-4")	(5) #5 BARS EACH WAY
F3	1829 x 1829 x 457 (6'-0" x 6'-0" x 1'-6")	(8) #5 BARS EACH WAY

FOOTING SCHEDULE NOTES:

1. ALL COLUMNS TO HAVE (4) 19 [3/4"] A307 ANCHOR BOLTS. SEE DETAIL 9/S2.3
2. ALL COLUMNS TO HAVE 38 [1 1/2"] NON-SHRINK GROUT BED. SEE DETAIL 8/S2.3
3. PROVIDE DOWELS WITH STANDARD HOOKS IN FOOTING THE SAME SIZE AS PIER REINFORCEMENT.

CONCRETE REINFORCEMENT PROTECTION:

FOOTINGS:	
BOTTOM & SIDES	76 [3"]
TOP	51 [2"]
WALLS:	
EXTERIOR EXPOSURE #5 AND LARGER	51 [2"]
INTERIOR EXPOSURE #11 AND SMALLER	19 [3/4"]
BEAMS/COLUMNS:	
OVER TIES OR STIRRUPS	38[1½"]

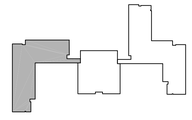

KEY PLAN

N

I hereby certify this drawing was prepared by me or under my direct supervision and that I am a duly registered architect under the laws of the State of Minnesota.

For: MEAD & HUNT, INC.

By:
Title: PROJECT MANAGER
Registration No: 22452

4000 2000 0 4000 8000

SCALE: 1 : 100

ALL SCALES SHOWN ARE BASED ON A STANDARD DRAWING SIZE OF 28" X 40" OR METRIC DRAWING SIZE OF 841mm X 594mm. IF ANY OTHER SIZE DRAWINGS ARE FURNISHED OR PLOTTED THE CONTRACTOR SHALL ADJUST THE SCALES ACCORDINGLY. THE CONTRACTOR SHALL ALSO ADVISE HIS SUB-CONTRACTORS OF THE ABOVE.

Revisions

Symbol	Descriptions	Date	Approved

Architect: ARCHITECTURAL ALLIANCE MINNEAPOLIS, MINNESOTA

Engineer: MEAD & HUNT MADISON, WISCONSIN

U.S. ARMY ENGINEER DISTRICT CORPS OF ENGINEERS OMAHA, NEBRASKA

Designed by: JMM
Drawn by: ACT/MJE
Checked by: TLK
Reviewed by: REC
Submitted by:

MINNEAPOLIS-ST.PAUL AFR — MINNESOTA

CONSOLIDATED LODGING FACILITY
– PHASE THREE –

FOUNDATION PLAN

Plot Scale Ratio: 1: 1
Design File: 8785S104.DWG
Date: 2-14-2002
Sheet reference number: S1.4
Spec. No.: DACA 45-02-B-0008
Contract No.: DACA
Drawing Code: AF 721-315-03

QJKL-990011P3

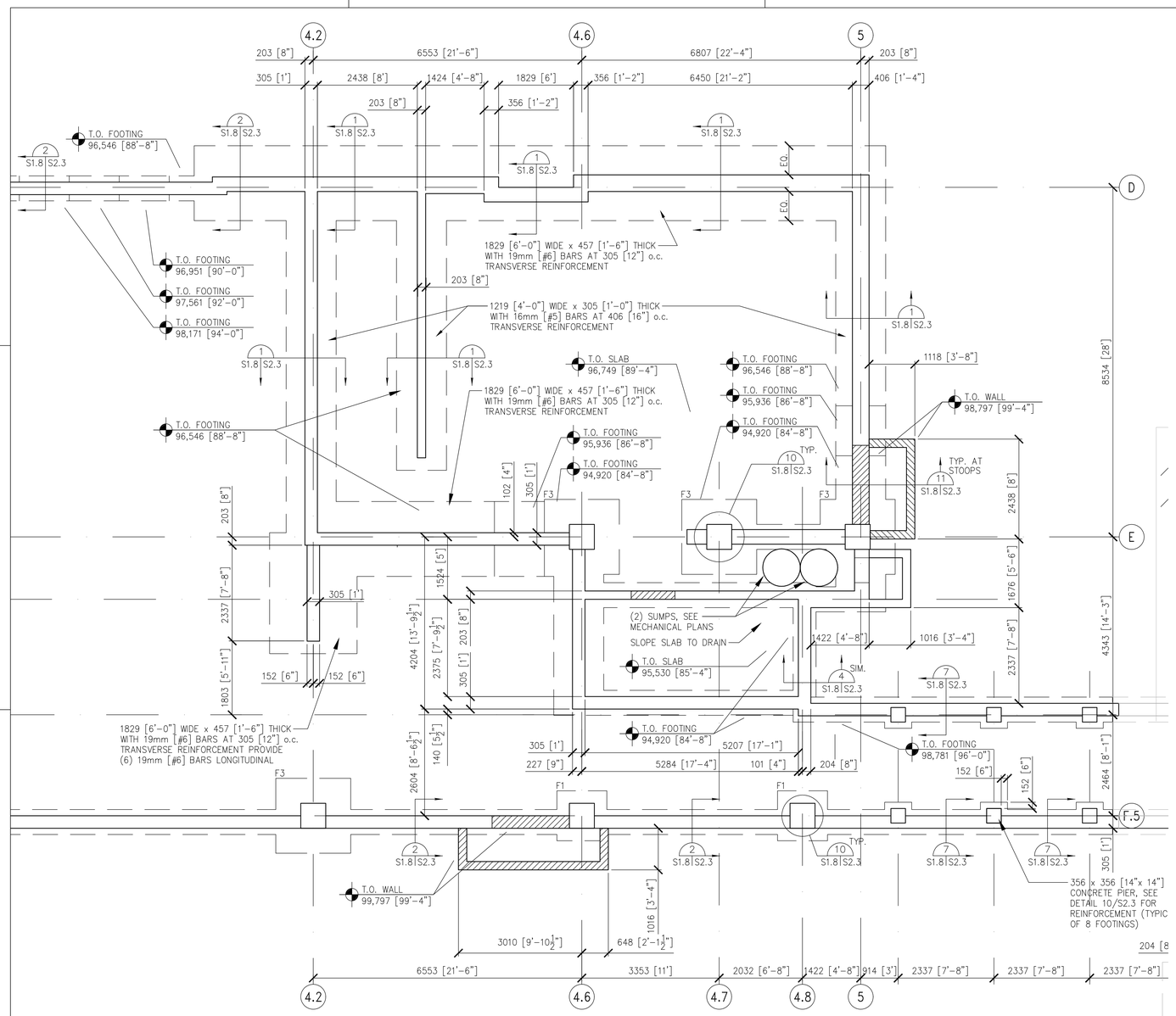

5B ENLARGED PARTIAL FOUNDATION PLAN – WEST WING
1:50

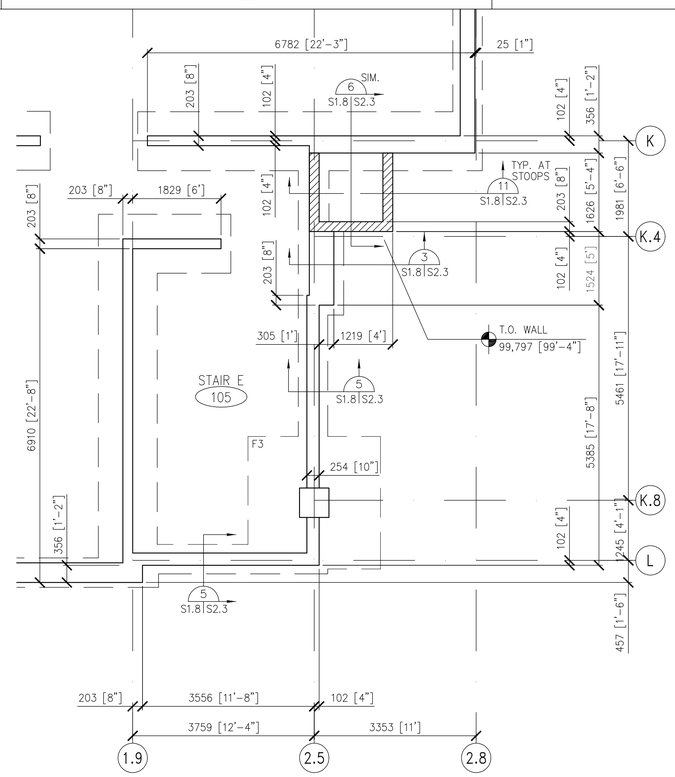

2C ENLARGED PARTIAL FOUNDATION PLAN – WEST WING
1:50

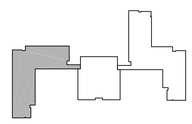

KEY PLAN

2000 1000 0 2000 4000

SCALE: 1 : 50

N

I hereby certify this drawing was prepared by me or under my direct supervision and that I am a duly registered architect under the laws of the State of Minnesota.

For: MEAD & HUNT, INC.

By:
Title: PROJECT MANAGER
Registration No: 22452

ALL SCALES SHOWN ARE BASED ON A STANDARD DRAWING SIZE OF 28" X 40" OR METRIC DRAWING SIZE OF 841mm X 594mm. IF ANY OTHER SIZE DRAWINGS ARE FURNISHED OR PLOTTED THE CONTRACTOR SHALL ADJUST THE SCALES ACCORDINGLY. THE CONTRACTOR SHALL ALSO ADVISE HIS SUB–CONTRACTORS OF THE ABOVE.

Revisions

Symbol	Descriptions	Date	Approved

Architect: ARCHITECTURAL ALLIANCE MINNEAPOLIS, MINNESOTA	Engineer: MEAD & HUNT MADISON, WISCONSIN	U.S. ARMY ENGINEER DISTRICT CORPS OF ENGINEERS OMAHA, NEBRASKA

Designed by: JMM
Drawn by: ACT/MJE
Checked by: TLK
Reviewed by: REC
Submitted by:

MINNEAPOLIS–ST.PAUL AFR — MINNESOTA

CONSOLIDATED LODGING FACILITY
– PHASE THREE –

ENLARGED FOUNDATION PLANS

Plot Scale Ratio: 1: 1
Design File: 8785S108.DWG
Date: 2–14–2002
Spec. No.: DACA 45–02–B–0008
Contract No.: DACA
Drawing Code: AF 721–315–03
Sheet reference number: S1.8

QJKL-990011P3