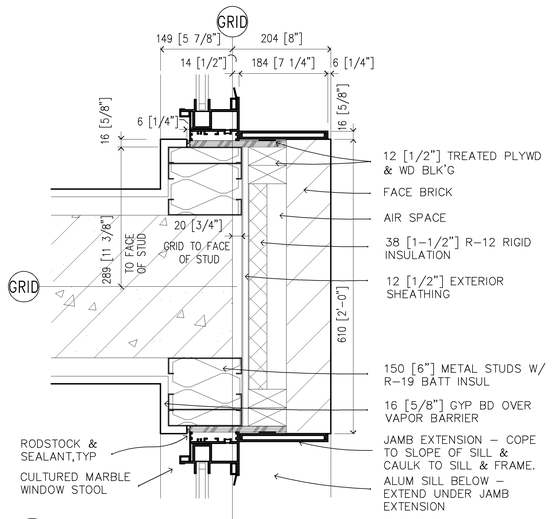

5C TYPICAL WINDOW JAMB DETAIL AT BRICK
1:5

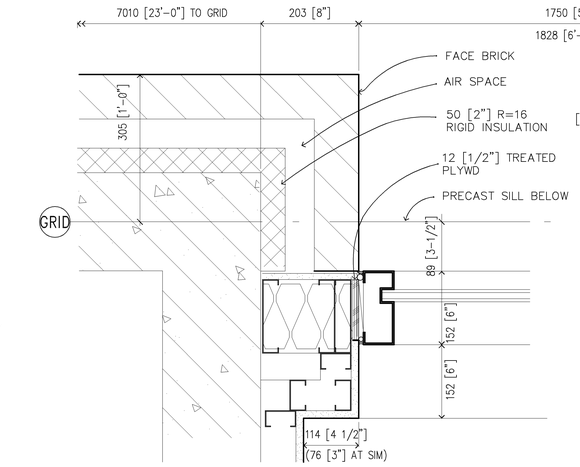

4C CURTAIN WALL JAMB DETAIL
1:5

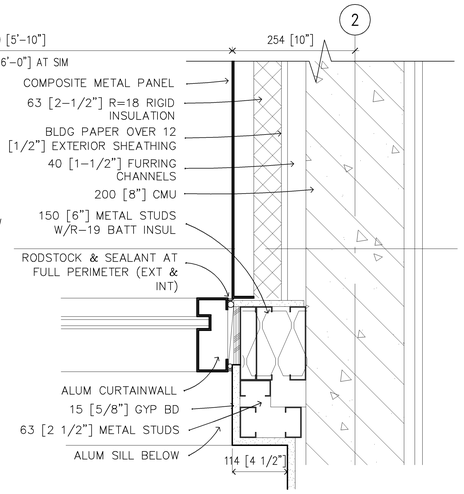

3C CURTAIN WALL JAMB DETAIL
1:5

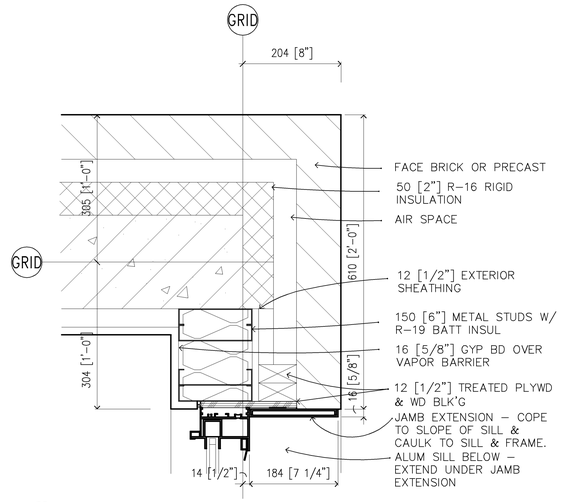

2C CORNER DETAIL AT BRICK
1:5

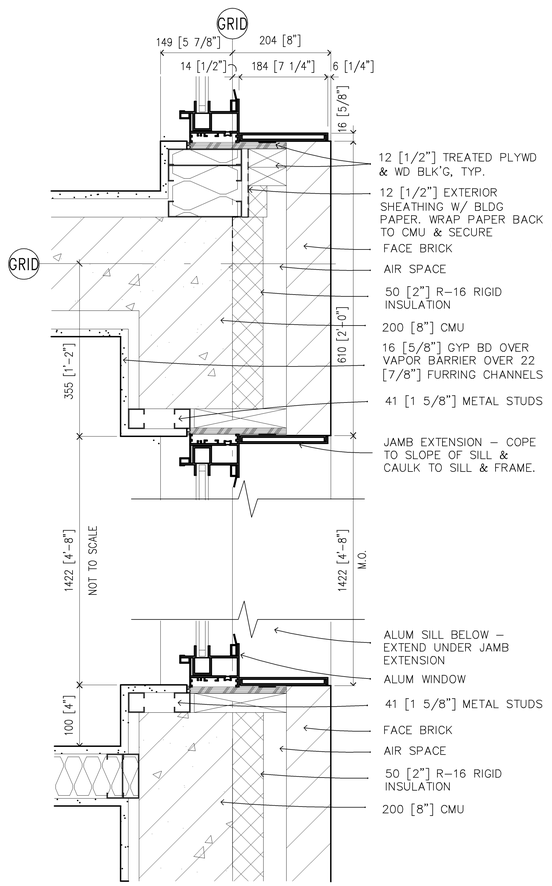

5A WINDOW JAMB DETAIL AT CORRIDOR
1:5

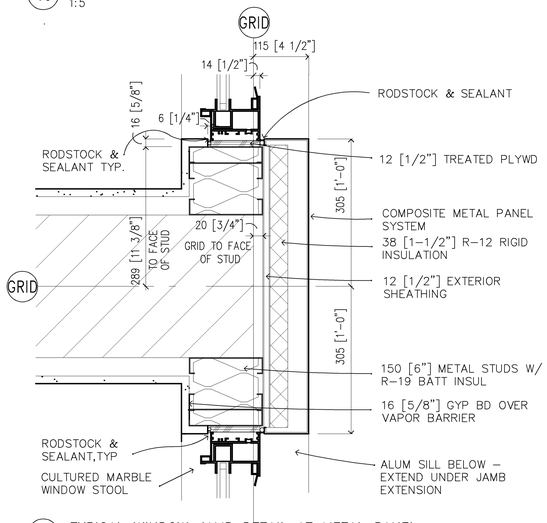

4B TYPICAL WINDOW JAMB DETAIL AT METAL PANEL
1:5

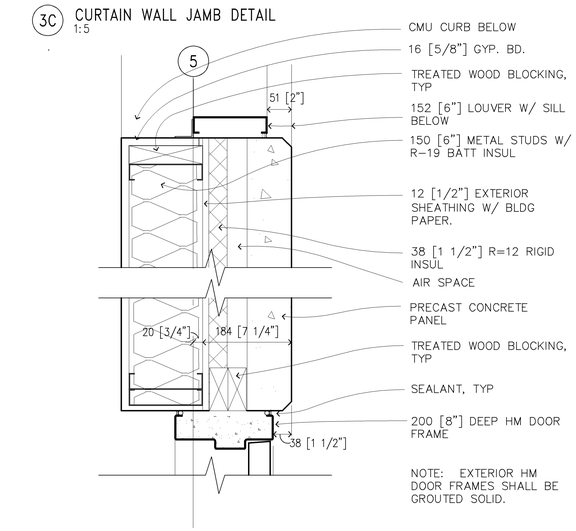

3B DETAIL AT MECHANICAL ROOM DOOR JAMB AND LOUVER JAMB
1:5

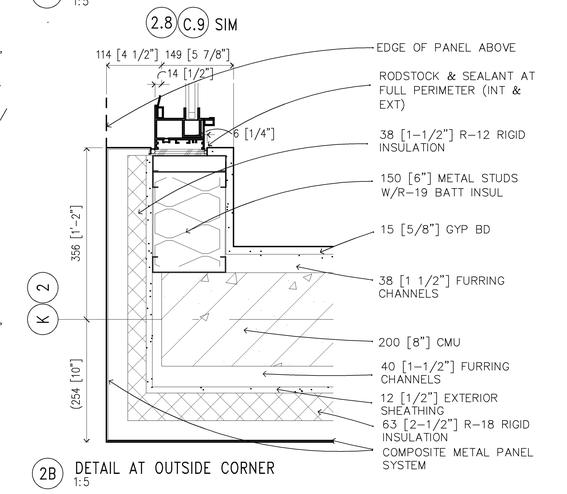

2B DETAIL AT OUTSIDE CORNER
1:5

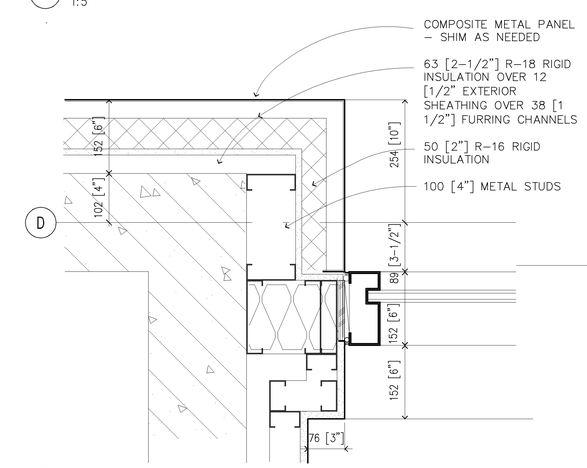

4A CURTAINWALL JAMB DETAIL
1:5

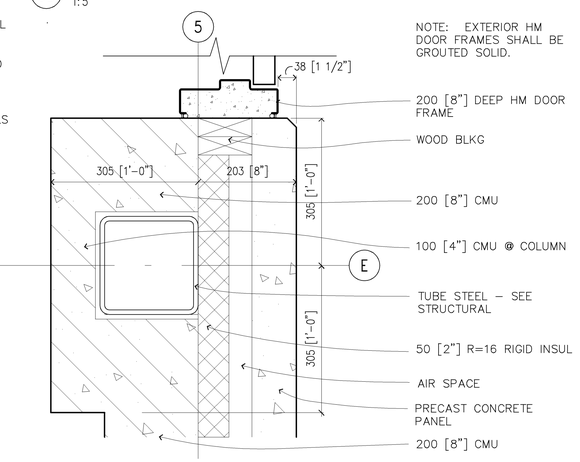

3A DETAIL AT MECHANICAL ROOM DOOR JAMB
1:5

200 100 0 200 400

SCALE: 1 : 5

I hereby certify this drawing was prepared by me or under my direct supervision and that I am a duly registered architect under the laws of the State of Minnesota.

For: Architectural Alliance
By:
Title: Principal
Registration No: 16854

ALL SCALES SHOWN ARE BASED ON A STANDARD DRAWING SIZE OF 28" X 40" OR METRIC DRAWING SIZE OF 841mm X 594mm. IF ANY OTHER SIZE DRAWINGS ARE FURNISHED OR PLOTTED THE CONTRACTOR SHALL ADJUST THE SCALES ACCORDINGLY. THE CONTRACTOR SHALL ALSO ADVISE HIS SUB-CONTRACTORS OF THE ABOVE.

Revisions			
Symbol	Descriptions	Date	Approved

Architect: ARCHITECTURAL ALLIANCE MINNEAPOLIS, MINNESOTA	Engineer: MEAD & HUNT MADISON, WISCONSIN	U.S. ARMY ENGINEER DISTRICT CORPS OF ENGINEERS OMAHA, NEBRASKA

Designed by: PS
Drawn by: JC
Checked by: PS
Reviewed by: EO
Submitted by:

MINNEAPOLIS-ST.PAUL AFR — MINNESOTA

CONSOLIDATED LODGING FACILITY
- PHASE THREE -

EXTERIOR DETAILS

Plot Scale Ratio: 1: 1
Design File: 9941A516
Date: 2-14-2002
Spec. No.: DACA 45-02-B-0008
Drawing Code:
Contract No.: DACA xx-xx-x-xxxx
AF 721-315-03
Sheet reference number: A5.16

QJKL-990011P3

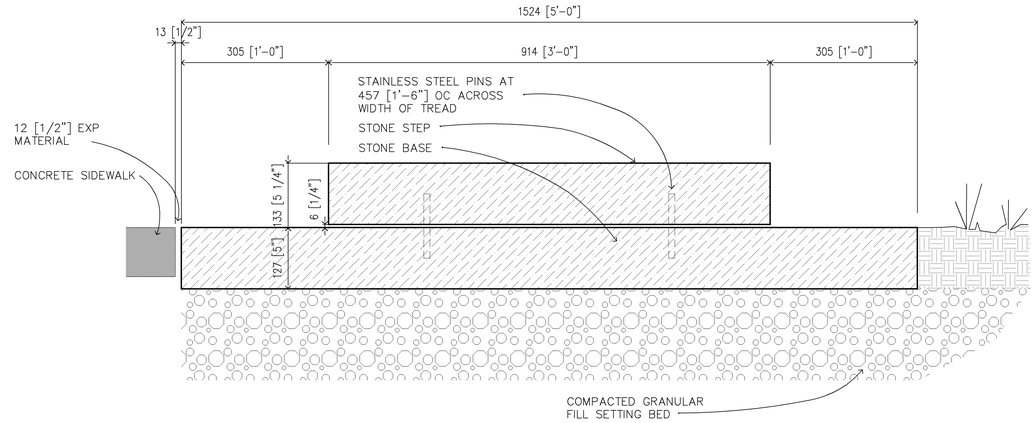

5D SECTION AT EXTERIOR STONE TREADS
1:5

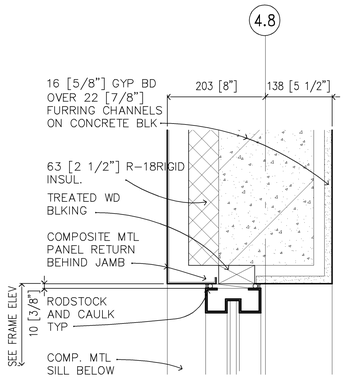

5B WINDOW JAMB AT UPPER FLOOR ELEVATOR LOBBIES
1:5

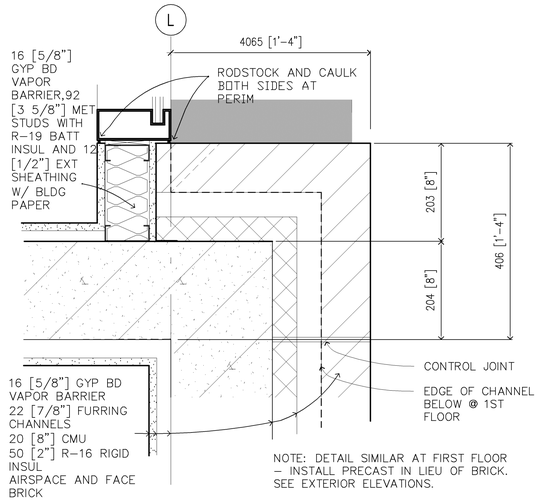

4B STAIR TOWER 'E' VERTICAL JAMB AT CURTAINWALL (FLOORS 2–4)
1:5

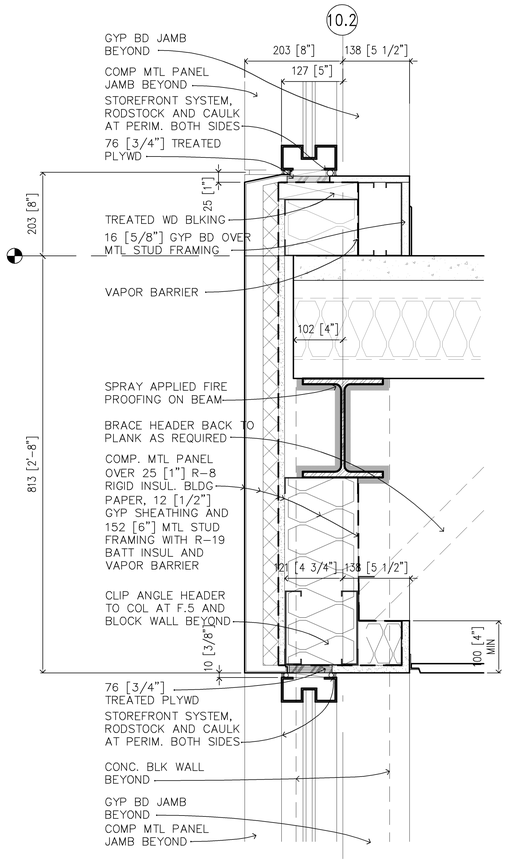

3B SECTION AT ELEVATOR LOBBY (WEST WALL)
1:5

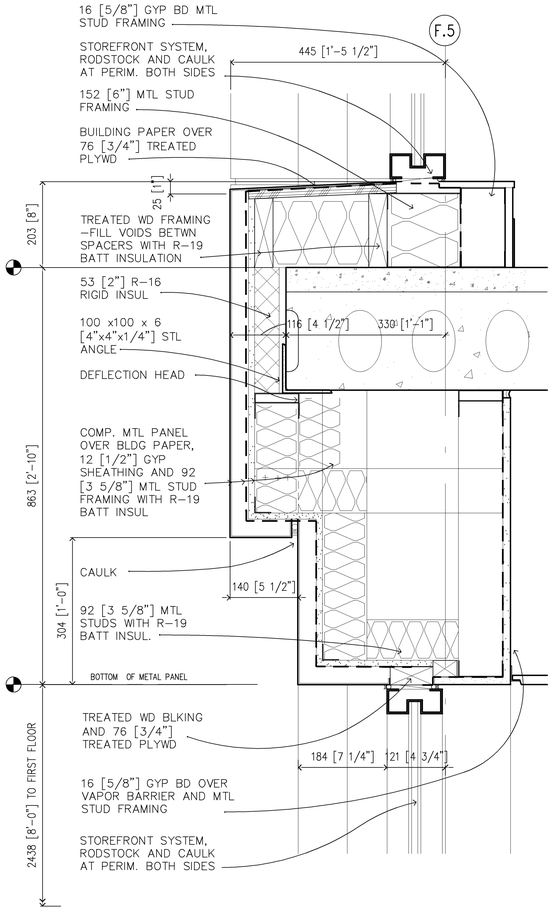

2B SECTION AT ELEVATOR LOBBY (SOUTH WALL)
1:5

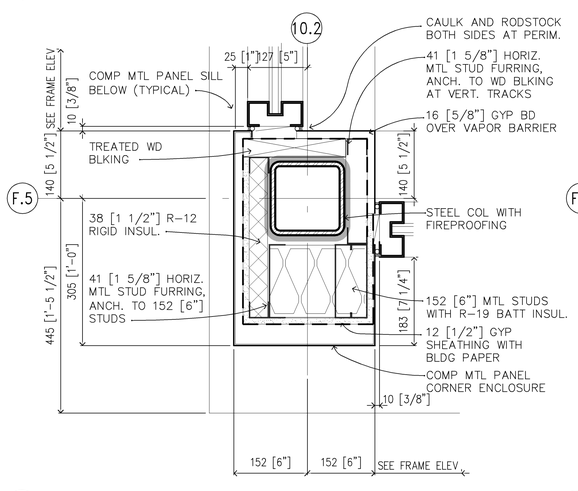

5A WINDOW JAMB AT UPPER FLOOR ELEVATOR LOBBIES
1:5

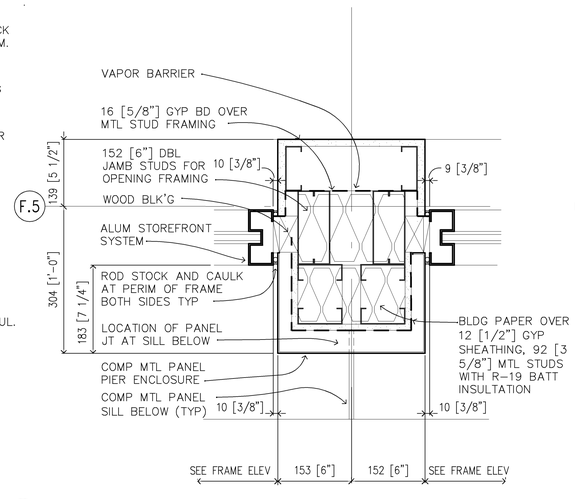

4A CENTER PIER AT UPPER ELEVATOR LOBBIES
1:5

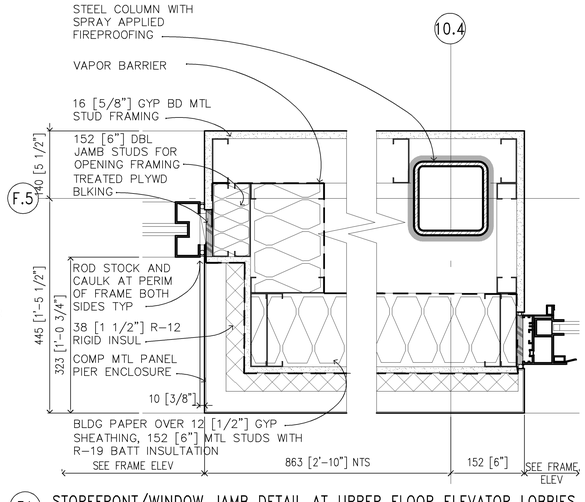

3A STOREFRONT/WINDOW JAMB DETAIL AT UPPER FLOOR ELEVATOR LOBBIES
1:5

200 100 0 200 400

SCALE: 1 : 5

I hereby certify this drawing was prepared by me or under my direct supervision and that I am a duly registered architect under the laws of the State of Minnesota.

For: Architectural Alliance
By:
Title: Principal
Registration No: 16854

ALL SCALES SHOWN ARE BASED ON A STANDARD DRAWING SIZE OF 28" X 40" OR METRIC DRAWING SIZE OF 841mm X 594mm. IF ANY OTHER SIZE DRAWINGS ARE FURNISHED OR PLOTTED THE CONTRACTOR SHALL ADJUST THE SCALES ACCORDINGLY. THE CONTRACTOR SHALL ALSO ADVISE HIS SUB-CONTRACTORS OF THE ABOVE.

Revisions

Symbol	Descriptions	Date	Approved

Architect: ARCHITECTURAL ALLIANCE MINNEAPOLIS, MINNESOTA

Engineer: MEAD & HUNT MADISON, WISCONSIN

U.S. ARMY ENGINEER DISTRICT CORPS OF ENGINEERS OMAHA, NEBRASKA

MINNEAPOLIS–ST.PAUL AFR — MINNESOTA

CONSOLIDATED LODGING FACILITY – PHASE THREE –

EXTERIOR DETAILS

Designed by: PS
Drawn by: JC
Checked by: PS
Reviewed by: EO
Submitted by:

Plot Scale Ratio: 1: 1
Design File: 9941A517
Date: 2–14–2002
Sheet reference number:
Spec. No.: DACA 45–02–B–0008
Contract No.: DACA xx–xx–x–xxxx
Drawing Code: AF 721–315–03
A5.17

QJKL-990011P3

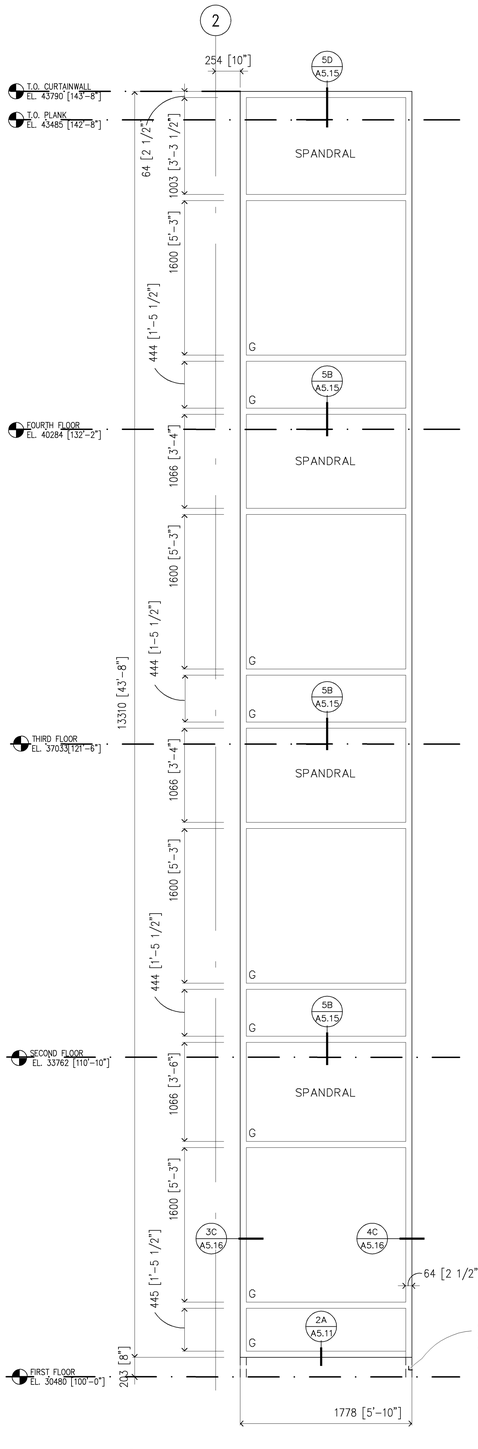

5A ALUMINUM CURTAIN WALL TYPE W31
1:25

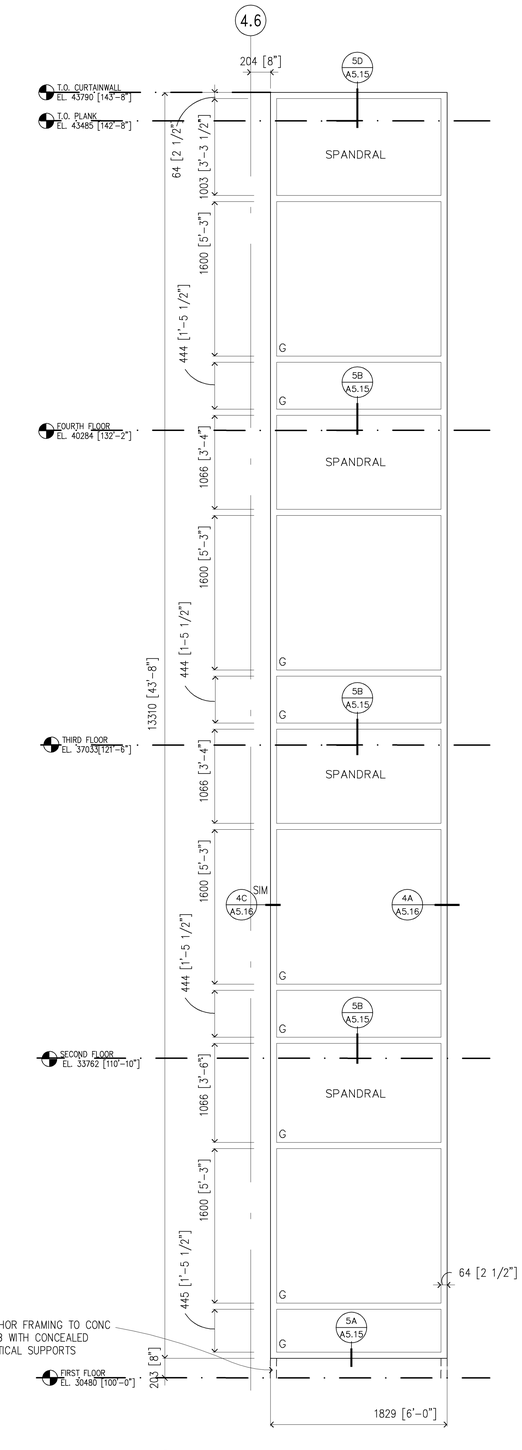

4A ALUMINUM CURTAIN WALL TYPE W30
1:25

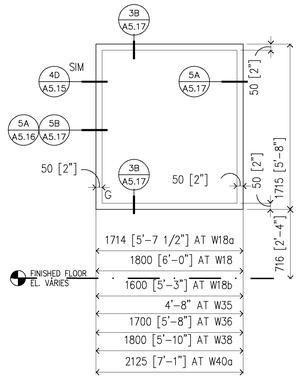

3D FIXED WINDOWS AND STOREFRONT
1:25
STOREFRONT TYPE W40a &
WINDOW TYPES W18,W18a,W18b
W35,W36,W38

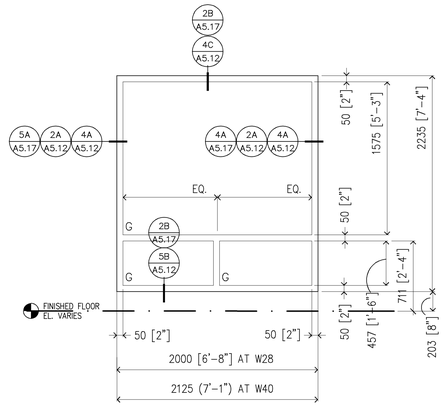

2D STOREFRONT WINDOW TYPE W28, 40
1:25

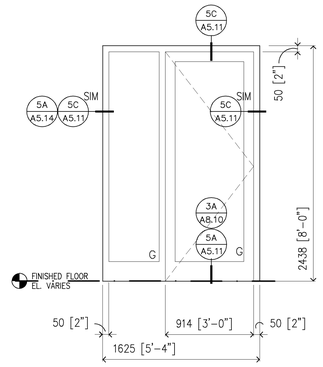

1D STOREFRONT DOOR TYPE W20
1:25

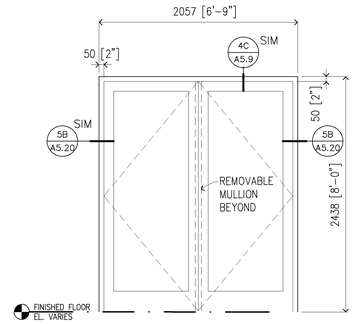

3C STOREFRONT DOOR TYPE W21
1:25

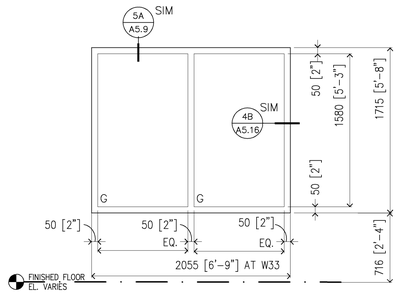

2C STOREFRONT WINDOW TYPE W33
1:25

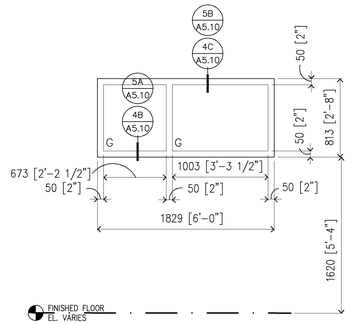

1C STOREFRONT WINDOW TYPE W19
1:25

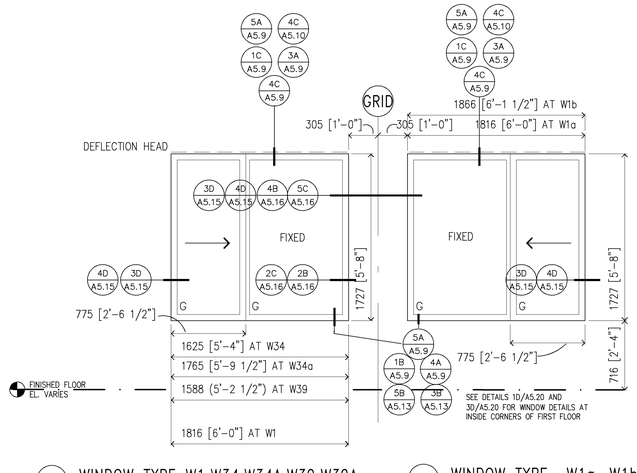

3A WINDOW TYPE W1,W34,W34A,W39,W39A
1:25

2A WINDOW TYPE W1a, W1b
1:25

I hereby certify this drawing was prepared by me or under my direct supervision and that I am a duly registered architect under the laws of the State of Minnesota.

For: Architectural Alliance
By:
Title: Principal
Registration No: 16854

1000 500 0 1000 2000

SCALE: 1 : 25

ALL SCALES SHOWN ARE BASED ON A STANDARD DRAWING SIZE OF 28" X 40" OR METRIC DRAWING SIZE OF 841mm X 594mm. IF ANY OTHER SIZE DRAWINGS ARE FURNISHED OR PLOTTED THE CONTRACTOR SHALL ADJUST THE SCALES ACCORDINGLY. THE CONTRACTOR SHALL ALSO ADVISE HIS SUB-CONTRACTORS OF THE ABOVE.

Revisions

Symbol	Descriptions	Date	Approved

Architect:
ARCHITECTURAL ALLIANCE
MINNEAPOLIS, MINNESOTA

Engineer:
MEAD & HUNT
MADISON, WISCONSIN

U.S. ARMY ENGINEER DISTRICT
CORPS OF ENGINEERS
OMAHA, NEBRASKA

MINNEAPOLIS–ST.PAUL AFR — MINNESOTA

Designed by: SS
Drawn by: SS/JM
Checked by: PS
Reviewed by: EO
Submitted by:

CONSOLIDATED LODGING FACILITY
– PHASE THREE –
CURTAIN WALL WINDOW, AND LOUVER ELEVATIONS

Plot Scale Ratio: 1: 1
Design File: 9941A518
Date: 2–14–2002
Spec. No.: DACA 45–02–B–0008
Contract No.: DACA xx–xx–x–xxxx
Drawing Code: AF 721–315–03
Sheet reference number: A5.18

QJKL-990011P3

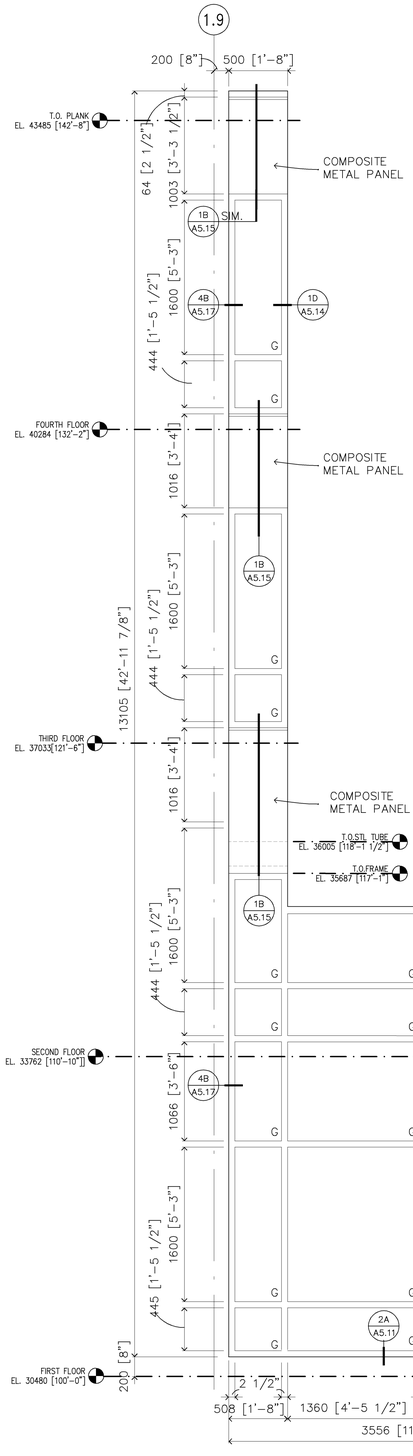

5A ALUMINUM CURTAIN WALL AT STAIR "E" – TYPE W25a
1:25

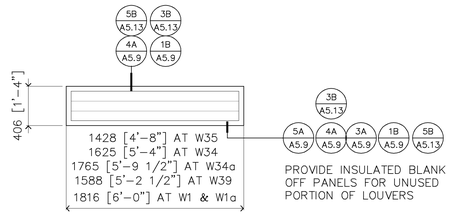

4D NARROW PROFILE ALUMINUM LOUVER L-1, L-1a, L34, L34a, L35, L39
1:25

NOTE: LOUVER NUMBER TYPES CORRESPOND TO THEIR RESPECTIVE WINDOW TYPE NUMBERS.

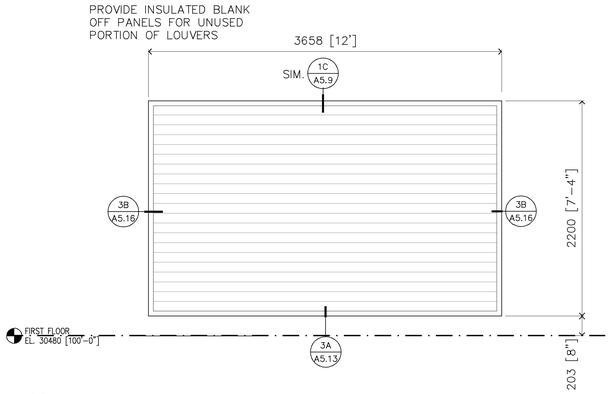

2D 6" PROFILE ALUMINUM LOUVER – L19
1:25

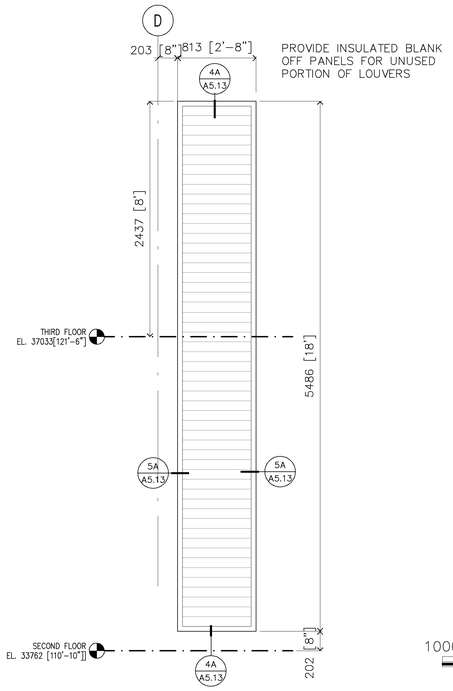

2B STANDARD PROFILE ALUMINUM LOUVER – L17
1:25

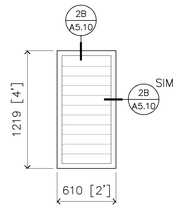

1C STANDARD PROFILE ALUMINUM LOUVER – L18
1:25

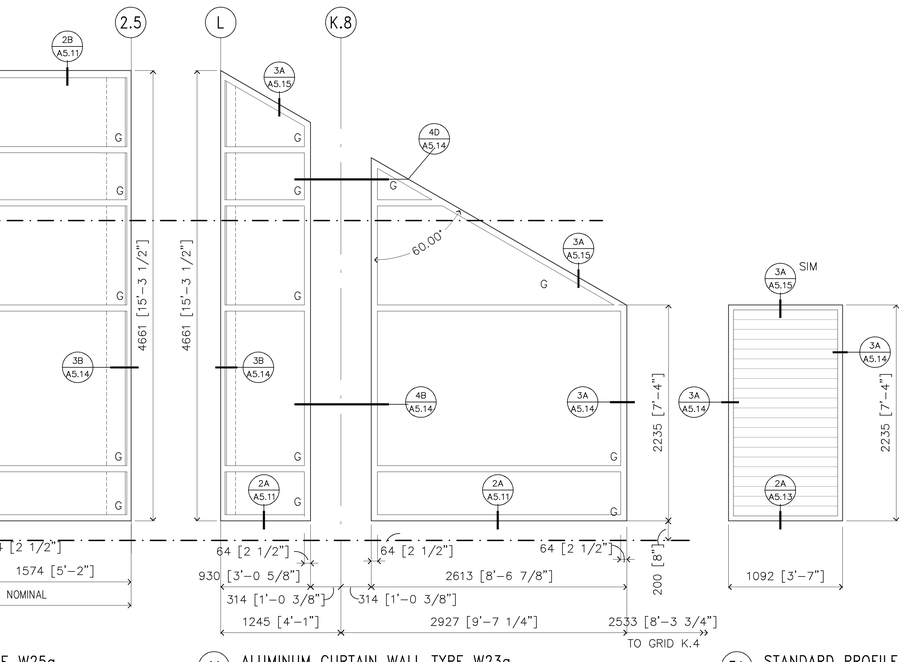

4A ALUMINUM CURTAIN WALL TYPE W23a
1:25

3A STANDARD PROFILE ALUMINUM LOUVER – L20
1:25

1000 500 0 1000 2000

SCALE: 1 : 25

ALL SCALES SHOWN ARE BASED ON A STANDARD DRAWING SIZE OF 28" X 40" OR METRIC DRAWING SIZE OF 841mm X 594mm. IF ANY OTHER SIZE DRAWINGS ARE FURNISHED OR PLOTTED THE CONTRACTOR SHALL ADJUST THE SCALES ACCORDINGLY. THE CONTRACTOR SHALL ALSO ADVISE HIS SUB-CONTRACTORS OF THE ABOVE.

I hereby certify this drawing was prepared by me or under my direct supervision and that I am a duly registered architect under the laws of the State of Minnesota.

For: Architectural Alliance
By:
Title: Principal
Registration No: 16854

Revisions

Symbol	Descriptions	Date	Approved

Architect: ARCHITECTURAL ALLIANCE MINNEAPOLIS, MINNESOTA

Engineer: MEAD & HUNT MADISON, WISCONSIN

U.S. ARMY ENGINEER DISTRICT CORPS OF ENGINEERS OMAHA, NEBRASKA

Designed by: SS
Drawn by: SS/JM
Checked by: PS
Reviewed by: EO
Submitted by:

MINNEAPOLIS–ST.PAUL AFR MINNESOTA

CONSOLIDATED LODGING FACILITY
– PHASE THREE –
CURTAIN WALL WINDOW, AND LOUVER ELEVATIONS

Plot Scale Ratio: 1: 1
Design File: 9941A519
Date: 2–14–2002
Sheet reference number:
Spec. No.: DACA 45–02–B–0008
Drawing Code: AF 721–315–03
Contract No.: DACA xx–xx–x–xxxx
A5.19

QJKL-990011P3

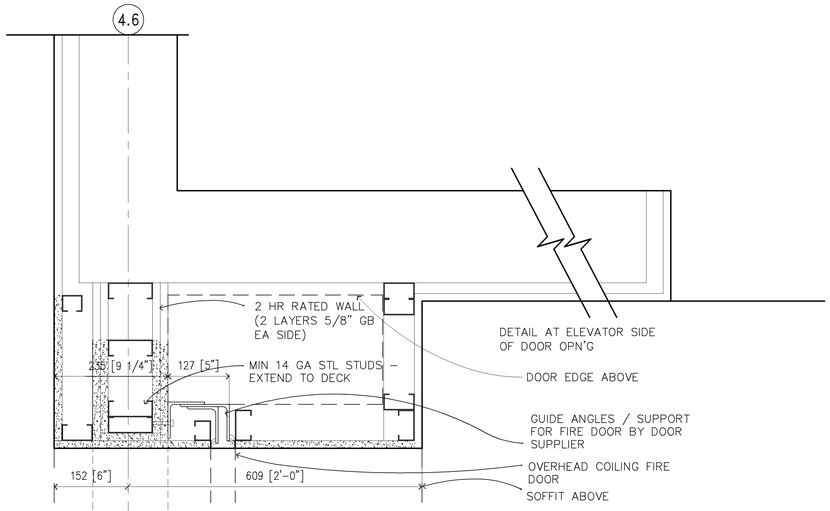

5C PLAN DETAIL AT COILING FIRE DOOR
1:5M

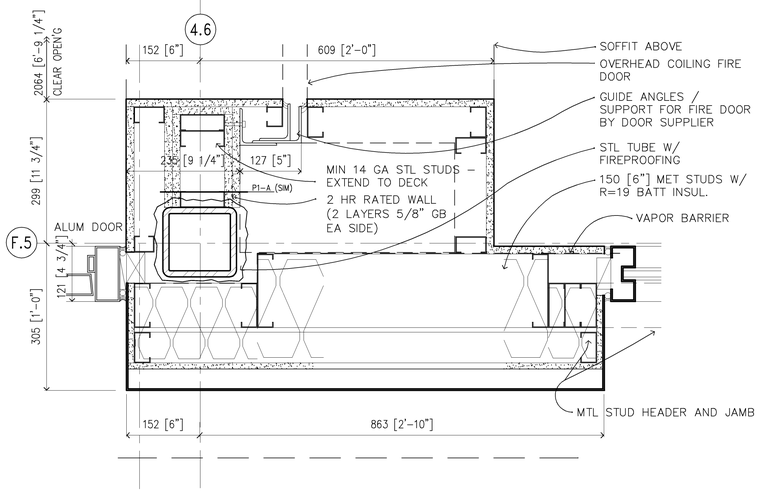

5B PLAN DETAIL AT GRIDS F.5 & 4.6
1:5M

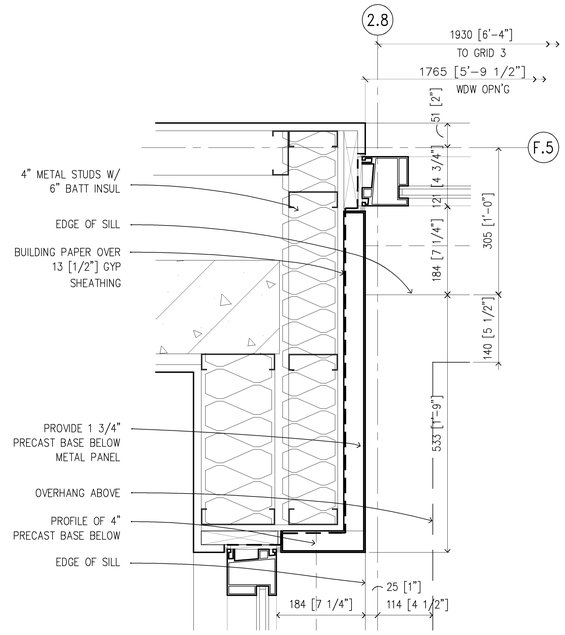

3D INSIDE CORNER AT 1ST FLOOR
1:5

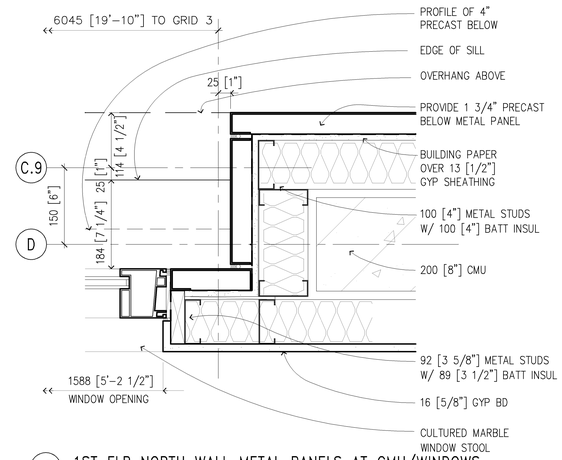

1D 1ST FLR NORTH WALL METAL PANELS AT CMU/WINDOWS
1:5

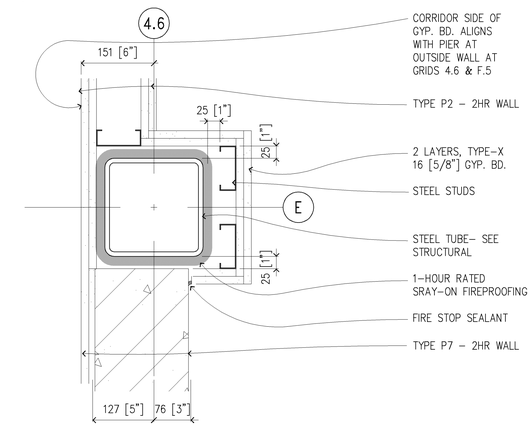

1C PLAN DETAIL AT MECH. RM. WALL, 1ST FLOOR
1:5

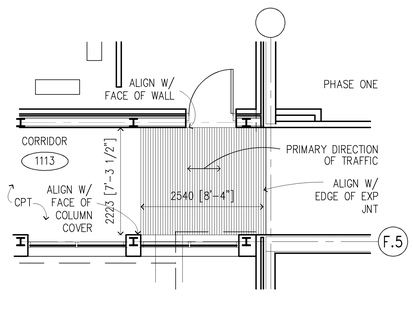

4A RECESSED MAT AT LINK ENTRY
1:50

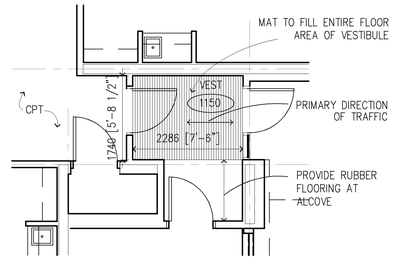

3A RECESSED MAT AT VESTIBULE 1150
1:50

200 100 0 200 400
SCALE: 1 : 5

2000 1000 0 2000 4000
SCALE: 1 : 50

I hereby certify this drawing was prepared by me or under my direct supervision and that I am a duly registered architect under the laws of the State of Minnesota.

For: Architectural Alliance
By:
Title: Principal
Registration No: 16854

ALL SCALES SHOWN ARE BASED ON A STANDARD DRAWING SIZE OF 28" X 40" OR METRIC DRAWING SIZE OF 841mm X 594mm. IF ANY OTHER SIZE DRAWINGS ARE FURNISHED OR PLOTTED THE CONTRACTOR SHALL ADJUST THE SCALES ACCORDINGLY. THE CONTRACTOR SHALL ALSO ADVISE HIS SUB–CONTRACTORS OF THE ABOVE.

Revisions

Symbol	Descriptions	Date	Approved

Architect:
ARCHITECTURAL ALLIANCE
MINNEAPOLIS, MINNESOTA

Engineer:
MEAD & HUNT
MADISON, WISCONSIN

U.S. ARMY ENGINEER DISTRICT
CORPS OF ENGINEERS
OMAHA, NEBRASKA

Designed by: SS
Drawn by: EO
Checked by: EO
Reviewed by: EO
Submitted by:

MINNEAPOLIS–ST.PAUL AFR — MINNESOTA

CONSOLIDATED LODGING FACILITY
– PHASE THREE –
DETAILS

Plot Scale Ratio: 1: 1
Design File: 9941A515
Date: 2–14–2002
Sheet reference number:
Spec. No.: DACA 45–02–B–0008
Contract No.: DACA xx–xx–x–xxxx
Drawing Code: AF 721–315–03
A5.20

QJKL-990011P3

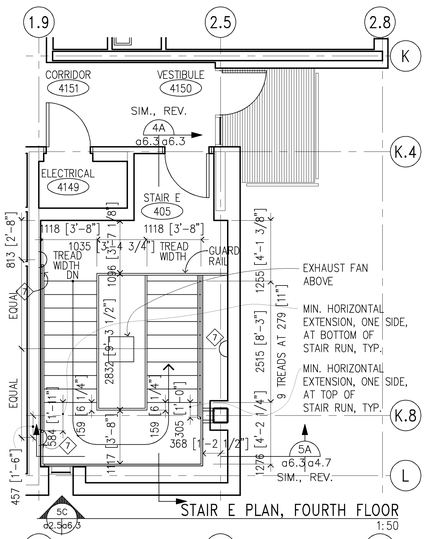

STAIR E PLAN, FOURTH FLOOR 1:50

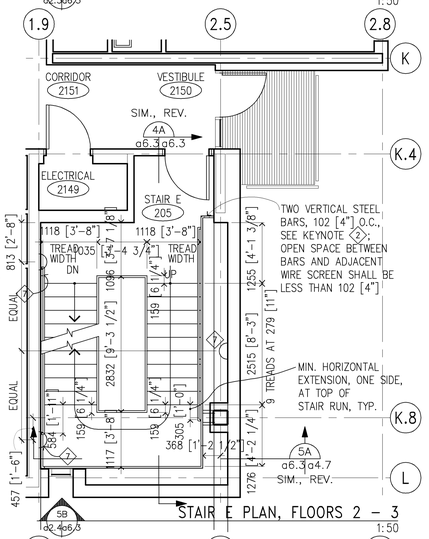

STAIR E PLAN, FLOORS 2 – 3 1:50

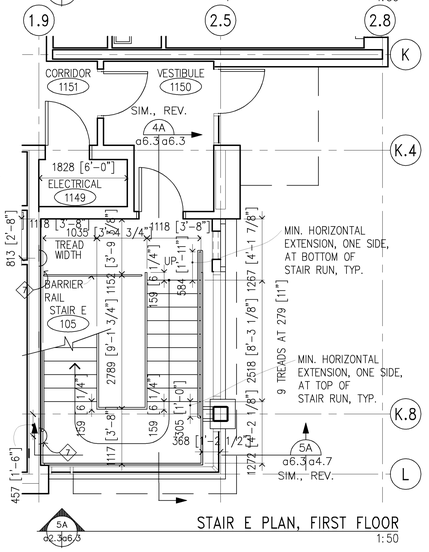

STAIR E PLAN, FIRST FLOOR 1:50

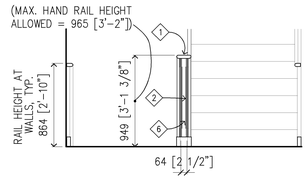

LANDING RAIL ELEV. 1:25

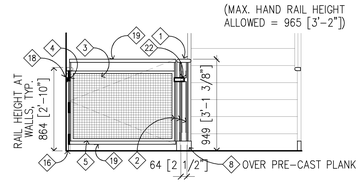

1ST FLR. BARRIER GATE ELEVATION 1:25

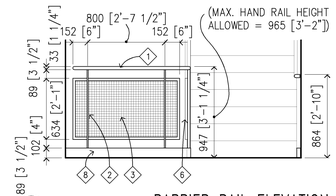

BARRIER RAIL ELEVATION 1:25

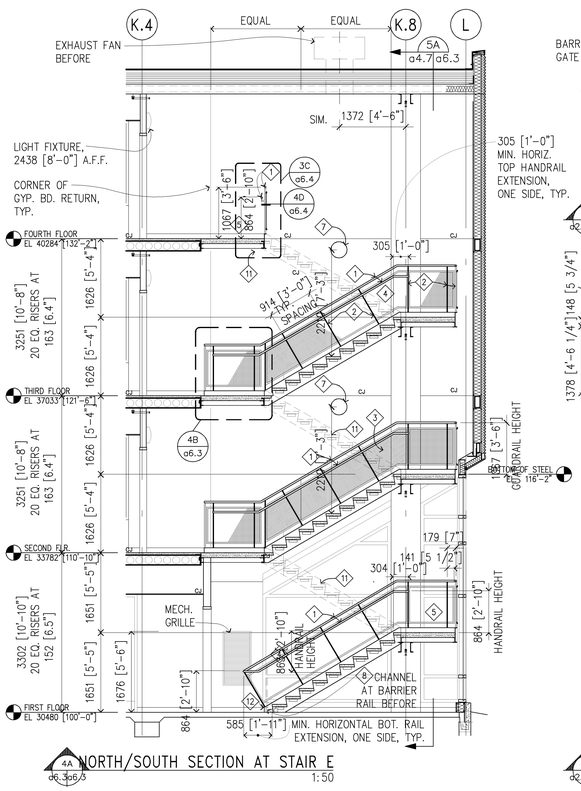

NORTH/SOUTH SECTION AT STAIR E 1:50

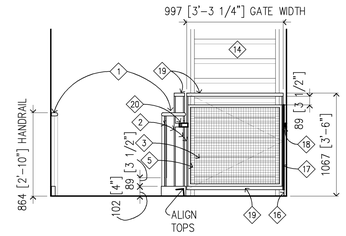

4TH FLR. BARRIER GATE ELEVATION 1:25

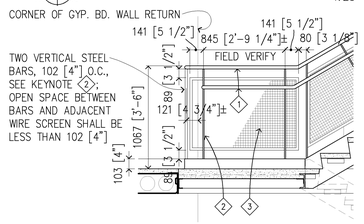

LANDING RAIL ELEVATION, FLOORS 2–3 1:25

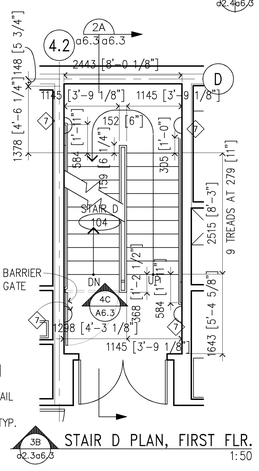

STAIR D PLAN, FIRST FLR. 1:50

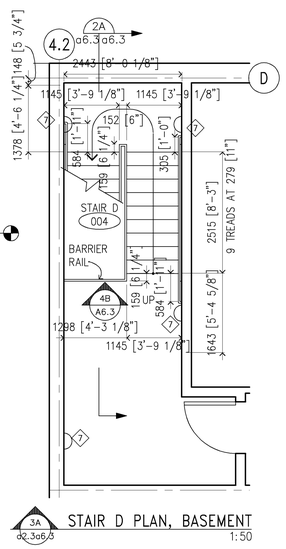

STAIR D PLAN, BASEMENT 1:50

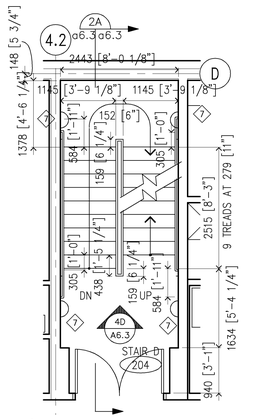

STAIR D PLAN, FLRS. 2–3 1:50

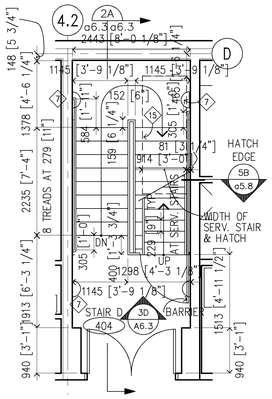

STAIR D PLAN, FLOOR 4 1:50

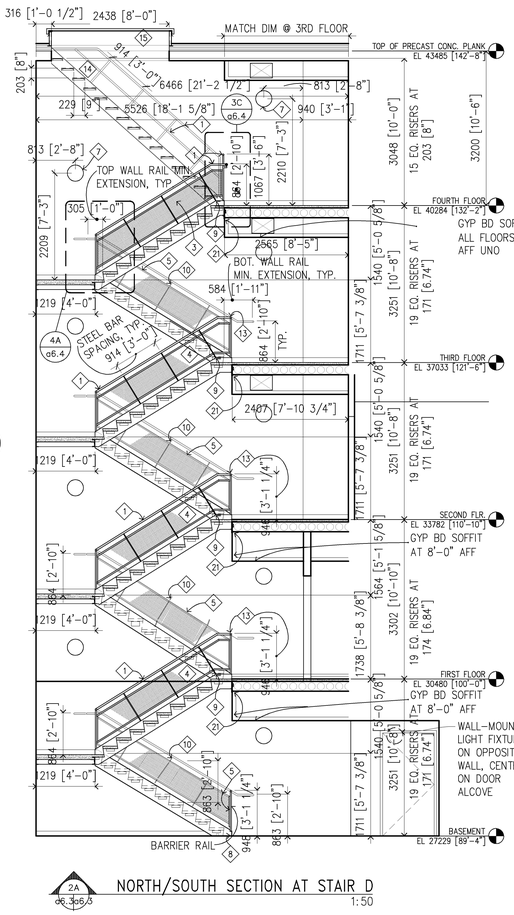

NORTH/SOUTH SECTION AT STAIR D 1:50

KEYNOTES FOR SHEET A6.3 – ENLARGED STAIR PLANS, SECTIONS, AND DETAILS

1. 33 [1.315"] PIPE RAIL (1" NOMINAL DIA.), TYP.
2. 25 X 13 [1" X 1/2"] STEEL BARS
3. 3 [0.105"] DIA. WIRE AND 25 [1"] SQUARE OPENINGS IN WELDED STEEL SCREEN INSIDE 25 X 16 [1" X 5/8"] STEEL ANGLE FRAMES W/ 19 [3/4" X 5 [3/16"] STEEL BAR TO HOLD SCREEN, TAMPER–RESISTANT FASTENERS AT MAX 305 [12"] ON CENTER WITH FASTENERS NOT VISIBLE FROM LANDING OR STAIR TREAD SIZE
4. 25 [1"] SQ. X 3 [0.105"] DIA. WELDED STEEL SCREEN, AS SHOWN COMPLETELY IN THE TOP RUN STAIR 'D' AND MIDDLE RUN STAIR 'E'; SCREEN FILLS 25 X 16 [1" X 5/8"] STEEL ANGLE FRAMES ON ALL RAILS, TYPICAL
5. STL. ANGLE HORIZONTAL LEG AND STEEL BAR TO CLAMP SCREEN TO BE ON SIDE OF OPENINGS, AWAY FROM TREADS & LANDINGS, TYPICAL
6. STEEL ANGLE FRAME BEYOND
7. WALL–MOUNTED LIGHT FIXTURE, 2032 [80"] MINIMUM CLEARANCE REQUIRED BETWEEN BOTTOM OF FIXTURE AND FLOOR/LANDING OR STAIR TREAD NOSING, TYP.
8. 102 [4"] CHANNEL, C4 x 5.4, FLANGES AWAY FROM AISLE; EXPANSION BOLTS INTO SLAB
9. START POINT FOR DIAGONAL STEEL BARS PERPENDICULAR TO STRINGERS
10. THE STEEL BARS FROM STRINGER HAND RAIL ARE CENTERED ON THE STRINGERS WHICH ARE COMPLETELY DIAGONAL
11. STAIR RUN BEFORE, INSTALL HAND RAILS WITH STEEL SCREEN AT STAIR'S CENTER OPENING SIMILAR TO THOSE SHOWN FOR STAIR 'D', SECTION 3A/a6.3
12. START POINT FOR STEEL BARS PERPENDICULAR TO STRINGERS
13. CONTINUOUS HAND RAIL AT CENTER OF STAIRS; 965 [3'–2"] IS MAXIMUM HAND RAIL HEIGHT ALLOWED, TYP.
14. SERVICE STAIR TO ROOF HATCH, MC 10 X 8.4 STRINGERS, STEEL GRATE 254 [10"] DEEP TREADS TYPICAL EXCEPT TOP TREAD IS 229 [9"] DEEP AND BOTTOM TREAD LEVEL WITH FOURTH FLOOR FINISH IS 178 [7"] DEEP; HANDRAIL MADE FROM 1" NOMINAL DIAMETER PIPE WHICH HAS ACTUAL DIAMETER OF 33 [1.315"]
15. ROOF HATCH, 914 X 2438 [3'–0" X 8'–0"]
16. 25 X 51 [1" X 2"] STEEL BAR GATE JAMB, THROUGH–BOLTED TO WALL
17. 51 [2"] CONTINUOUS HINGE ALONG FULL HEIGHT OF GATE
18. WALL STOP CENTERED ON SWINGING GATE'S PADLOCK/RUBBER BUMPER PLATE
19. 33 [1.315] DIA. STEEL PIPE WITH STEEL–FILLED ENDS WITH WELDS GROUND SMOOTH
20. 16 [5/8"] DIA. PADLOCK HOLES IN TWO 6 [1/4"] THICK STEEL PLATES, CENTERED 737 [29"] A.F.F.; PLATE WELDED TO GATE 89 X 38 [3 1/2" X 1 1/2"]; FIXED PLATE WELDED FLUSH WITH FACE OF ADJACENT GUARDRAIL VERTICALS
21. ALIGN EDGE OF GYP BD SOFFIT WITH EDGE OF PRECAST, BEHIND BENT PLATE AT FACE, TYP ALL FLOORS
22. INSTALL RUBBER BUMPER ON FIXED RAIL PLATE, USE 6 [1/4"] THICK STEEL PLATES, CENTERED 737 [29"] A.F.F.; PLATE WELDED TO GATE 102 X 38 [4" X 1 1/2"]; FIXED PLATE WELDED FLUSH WITH FACE OF ADJACENT HANDRAIL VERTICALS
23. THREE 102 [4"] SPRING HINGES TO PROVIDE SELF–CLOSING GATE

1000 500 0 1000 2000

SCALE: 1 : 25

2000 1000 0 2000 4000

SCALE: 1 : 50

ALL SCALES SHOWN ARE BASED ON A STANDARD DRAWING SIZE OF 28" X 40" OR METRIC DRAWING SIZE OF 841mm X 594mm. IF ANY OTHER SIZE DRAWINGS ARE FURNISHED OR PLOTTED THE CONTRACTOR SHALL ADJUST THE SCALES ACCORDINGLY. THE CONTRACTOR SHALL ALSO ADVISE HIS SUB–CONTRACTORS OF THE ABOVE.

I hereby certify this drawing was prepared by me or under my direct supervision and that I am a duly registered architect under the laws of the State of Minnesota.

For: Architectural Alliance
By:
Title: Principal
Registration No: 16854

Revisions

Symbol	Descriptions	Date	Approved

Architect: ARCHITECTURAL ALLIANCE MINNEAPOLIS, MINNESOTA

Engineer: MEAD & HUNT MADISON, WISCONSIN

U.S. ARMY ENGINEER DISTRICT CORPS OF ENGINEERS OMAHA, NEBRASKA

MINNEAPOLIS–ST.PAUL AFR MINNESOTA

Designed by: SS
Drawn by: SS/JM
Checked by: PS
Reviewed by: EO
Submitted by:

CONSOLIDATED LODGING FACILITY – PHASE THREE –

ENLARGED STAIR PLANS, SECTIONS, & DETAILS

Plot Scale Ratio: 1: 1
Design File: 9941A63
Date: 2–14–2002
Spec. No.: DACA 45–02–B–0008
Contract No.: DACA xx–xx–x–xxxx
Drawing Code: AF 721–315–03
Sheet reference number: A6.3

QJKL-990011P3

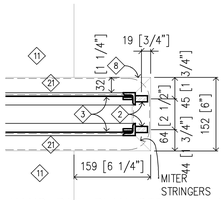

5E HAND RAIL PLAN DETAIL AT LANDING, STAIR D
1:5

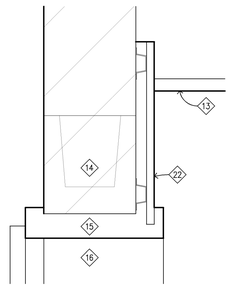

5D ELEVATOR HEAD DETAIL
1:5

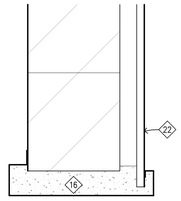

5C ELEVATOR JAMB DETAIL
1:5

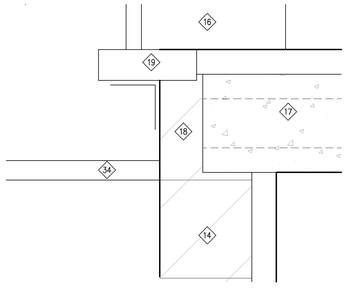

5B ELEVATOR THRESHOLD DETAIL, FLRS. 2–4
1:5

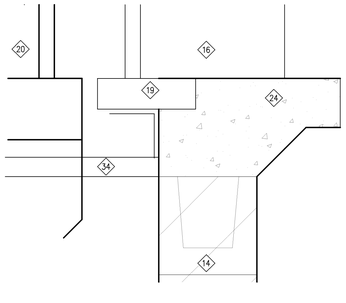

5A ELEVATOR FIRST FLOOR THRESHOLD DETAIL
1:5

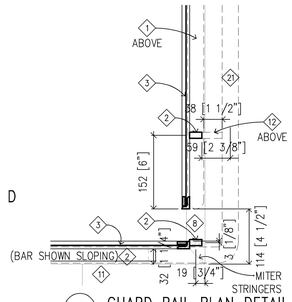

4D GUARD RAIL PLAN DETAIL
1:5

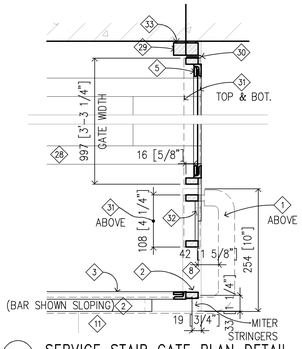

4C SERVICE STAIR GATE PLAN DETAIL
1:5

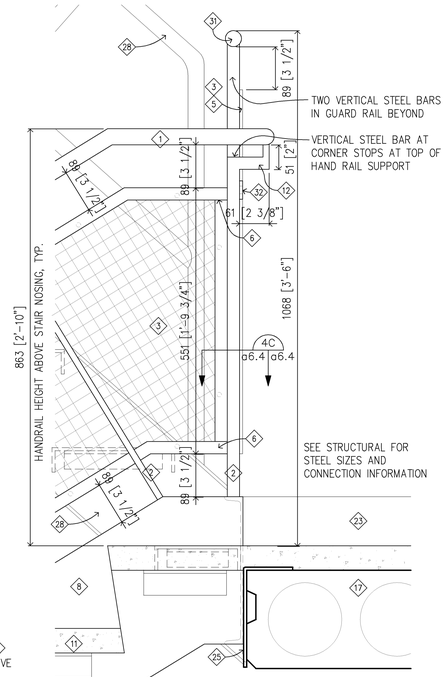

3C RAIL DETAIL AT TOP LANDING AT STAIR 'D'
1:5

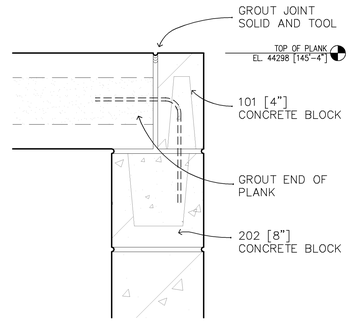

2C ELEVATOR SHAFT PLANK ENCLOSURE
1:5

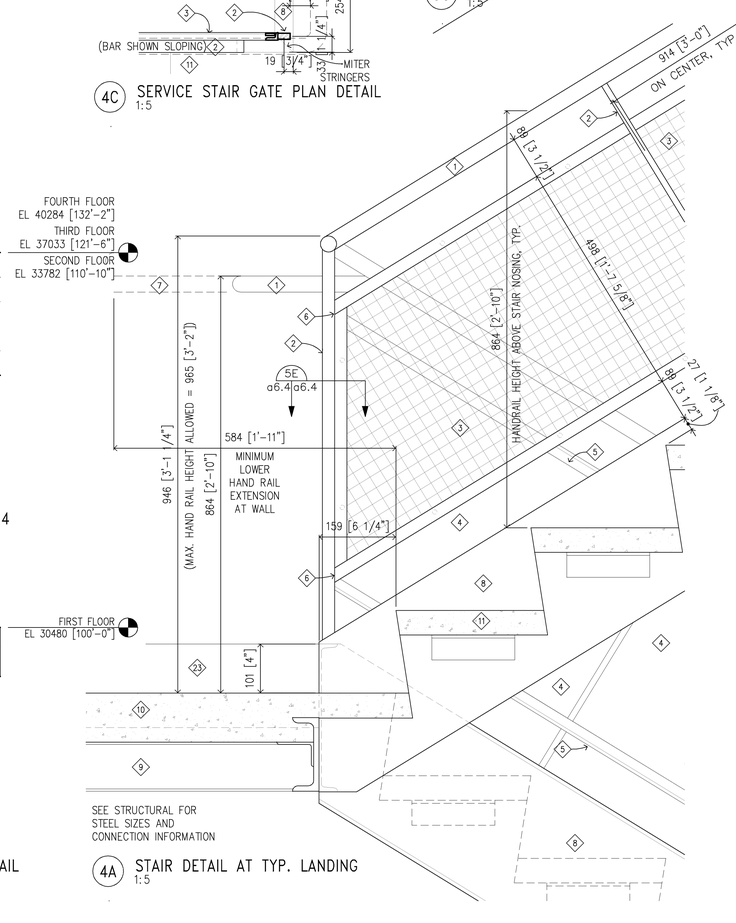

4A STAIR DETAIL AT TYP. LANDING
1:5

KEYNOTES FOR SHEET A6.4 – STAIR AND ELEVATOR DETAILS

1. 33 [1.315"] DIA. PIPE RAIL TYPICAL
2. 25 [1"] X 13 [1/2"] STEEL BAR
3. 3 [0.105"] DIA. WIRE AND 25 [1"] SQUARE OPENINGS IN WELDED STEEL SCREEN INSIDE 25 X 16 [1" X 5/8"] STEEL ANGLE FRAMES WITH 19 [3/4"] X 5 [3/16"] STEEL BAR HELD IN PLACE BY TAMPER–RESISTANT FASTENERS NOT VISIBLE FROM LANDING/STAIR TREAD SIDE AND SPACED MAX. OF 305 [12"] ON CENTER
4. WELDED SCREEN COMPLETELY FILLS ALL 25 [1"] STEEL ANGLE FRAMES AT RAILS
5. STEEL BARS CLAMPING WIRE SCREENS WITHIN ANGLES TO BE ON SIDE OF OPENINGS, AWAY FROM STAIR TREADS AND LANDINGS, TYPICAL
6. COPE LEGS OF VERTICAL STL. ANGLES TO LEGS OF DIAGONAL OR HORIZONTAL STL. ANGLES TO COMPLETELY CLOSE THE STL. ANGLE FRAME FOR THE WELDED STEEL SCREEN
7. WALL HAND RAIL EXTENSION AT BOTTOM OF STAIR RUN, MIN. 584 [1'–11"] BEYOND NOSE OF LOWEST TREAD, TYPICAL
   [WALL HAND RAIL EXTENSION AT TOP OF STAIR RUN, MIN. 305 [1'–0"] BEYOND NOSE OF TOP TREAD, TYPICAL]
8. 305 [12"] STEEL CHANNEL STRINGER, MC 12 X 10.6
9. 102 [4"] STEEL CHANNEL FRAME AT LANDING; MITRE CORNERS
10. 102 [4"] POURED CONCRETE LANDING ON 38 [1 1/2"] STEEL DECKING
11. METAL PAN CEMENT–FILLED TREADS
12. STEEL BAR HAND RAIL SUPPORT; HORIZONTAL 25 [1"] X 13 [1/2"]; VERTICAL 13 [1/2"] SQ.
13. SUSPENDED ACOUSTICAL TILE CEILING
14. BOND BEAM, SEE STRUCTURAL
15. ELEVATOR DOOR FRAME HEAD
16. ELEVATOR DOOR FRAME JAMB; GROUT SOLID
17. 203 [8"] PRECAST CONCRETE PLANK WITH 51 [2"] POURED CONCRETE TOPPING
18. 102 [4"] CONCRETE BLOCK
19. ELEVATOR DOOR SILL
20. ELEVATOR CAR
21. HANDRAIL ABOVE
22. 16 [5/8"] GYPSUM BOARD ON 22 [7/8"] HAT CHANNELS
23. 102 [4"] VINYL WALL BASE
24. CONCRETE SLAB
25. CONTINUOUS BENT STEEL PLATE, SEE STRUCTURAL
26. STAIR RUN BEFORE, HAND RAILS SIM. TO STAIR 'D' AT INTERIOR OPENING NOT SHOWN
27. CONTINUOUS HAND RAIL AT CENTER OF STAIRS; 965 [3'–2"] IS MAXIMUM HAND RAIL HEIGHT ALLOWED, TYP.
28. SERVICE STAIR TO ROOF HATCH, MC 10 X 8.4 STRINGERS, STEEL GRATE 254 [10"] DEEP TREADS TYPICAL EXCEPT TOP TREAD IS 229 [9"] DEEP AND BOTTOM TREAD LEVEL WITH FOURTH FLOOR FINISH IS 178 [7"] DEEP; HANDRAIL MADE FROM 1" NOMINAL DIAMETER PIPE WHICH HAS ACTUAL DIAMETER OF 33 [1.315"]
29. 25 X 51 [1" X 2"] STEEL BAR GATE JAMB, THROUGH–BOLTED TO WALL
30. 51 [2"] CONTINUOUS HINGE ALONG FULL HEIGHT OF GATE; DRILL AND TAP HOLES IN GATE AND JAMB ACCORDING TO HINGE HOLE PATTERN FOR ATTACHING HINGE WITH FLAT HEAD MACHINE SCREWS
31. 33 [1.315] DIA. STEEL PIPE WITH STEEL–FILLED ENDS WITH WELDS GROUND SMOOTH
32. 16 [5/8"] DIA. PADLOCK HOLES IN TWO 6 [1/4"] THICK STEEL PLATES, CENTERED 737 [29"] A.F.F.; PLATE WELDED TO GATE 89 X 38 [3 1/2" X 1 1/2"]; FIXED PLATE WELDED FLUSH WITH FACE OF ADJACENT GUARDRAIL VERTICALS
33. INSTALL SHIM AND SEALANT BETWEEN STEEL BAR JAMB AND WALL
34. DIVIDER BEAM, TYP, SEE STRUCTURAL

200 100 0 200 400

SCALE: 1 : 5

ALL SCALES SHOWN ARE BASED ON A STANDARD DRAWING SIZE OF 28" X 40" OR METRIC DRAWING SIZE OF 841mm X 594mm. IF ANY OTHER SIZE DRAWINGS ARE FURNISHED OR PLOTTED THE CONTRACTOR SHALL ADJUST THE SCALES ACCORDINGLY. THE CONTRACTOR SHALL ALSO ADVISE HIS SUB–CONTRACTORS OF THE ABOVE.

I hereby certify this drawing was prepared by me or under my direct supervision and that I am a duly registered architect under the laws of the State of Minnesota.

For: Architectural Alliance
By:
Title: Principal
Registration No: 16854

Revisions

Symbol	Descriptions	Date	Approved

Architect: ARCHITECTURAL ALLIANCE MINNEAPOLIS, MINNESOTA

Engineer: MEAD & HUNT MADISON, WISCONSIN

U.S. ARMY ENGINEER DISTRICT CORPS OF ENGINEERS OMAHA, NEBRASKA

Designed by: SS
Drawn by: SS/JM
Checked by: PS
Reviewed by: EO
Submitted by:

MINNEAPOLIS–ST.PAUL AFR MINNESOTA

CONSOLIDATED LODGING FACILITY
– PHASE THREE –

STAIR AND ELEVATOR DETAILS

Plot Scale Ratio: 1: 1
Design File: 9941A61
Date: 2–14–2002
Sheet reference number:
Spec. No.: DACA 45–02–B–0008
Contract No.: DACA xx–xx–x–xxxx
Drawing Code: AF 721–315–03
A6.4

QJKL-990011P3

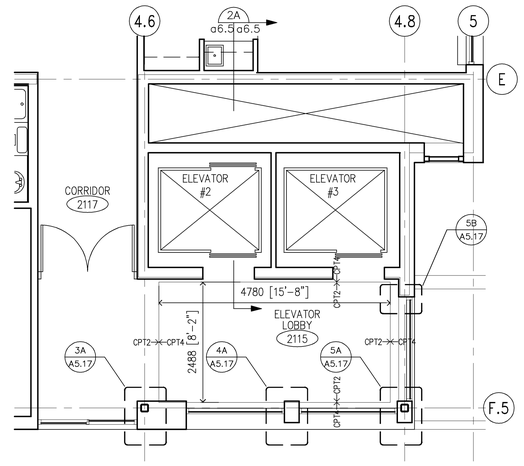

3C a2.4a6.5 WEST WING ELEVATOR PLAN, FLOORS 2–4
1:50

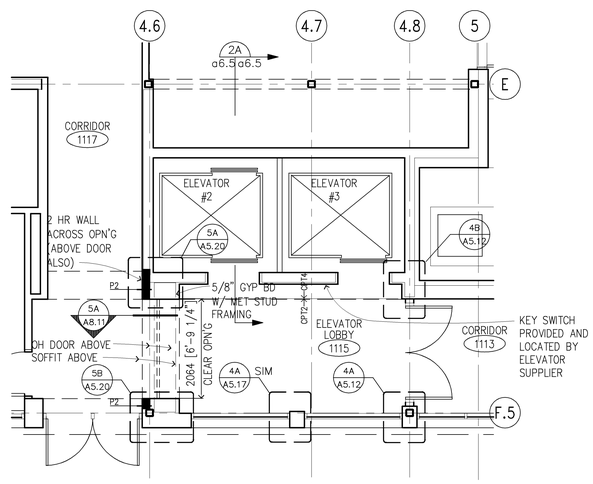

3B a2.3a6.5 WEST WING ELEVATOR PLAN, FIRST FLOOR
1:50

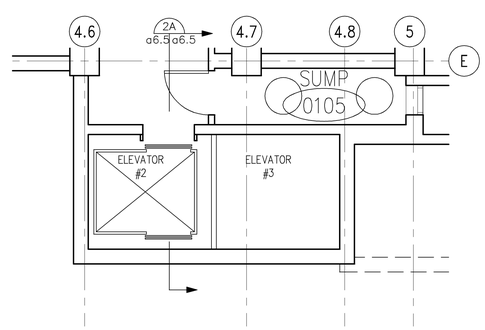

3A a2.3a6.5 WEST WING ELEVATOR PLAN, BASEMENT
1:50

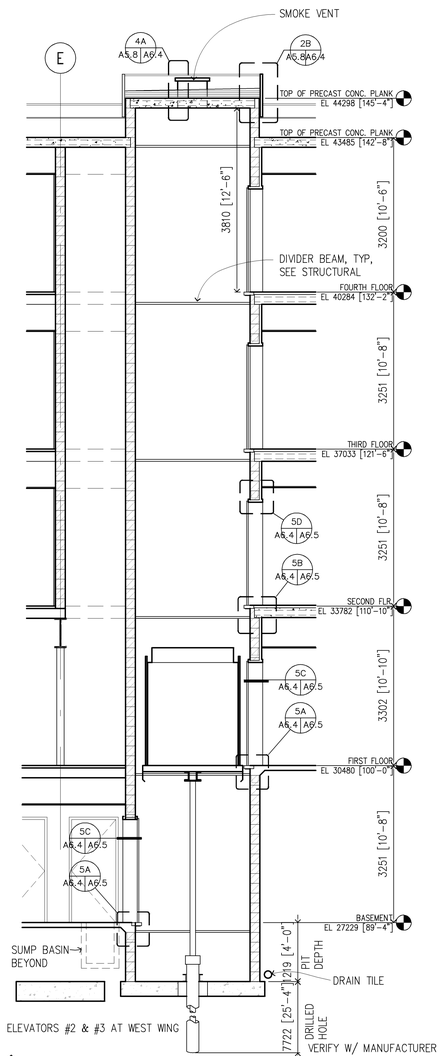

2A a6.5a6.5 SECTION AT PHASE THREE ELEVATORS
1:50

N

I hereby certify this drawing was prepared by me or under my direct supervision and that I am a duly registered architect under the laws of the State of Minnesota.

For: Architectural Alliance
By:
Title: Principal
Registration No: 16854

2000 1000 0 2000 4000

SCALE: 1 : 50

ALL SCALES SHOWN ARE BASED ON A STANDARD DRAWING SIZE OF 28" X 40" OR METRIC DRAWING SIZE OF 841mm X 594mm. IF ANY OTHER SIZE DRAWINGS ARE FURNISHED OR PLOTTED THE CONTRACTOR SHALL ADJUST THE SCALES ACCORDINGLY. THE CONTRACTOR SHALL ALSO ADVISE HIS SUB–CONTRACTORS OF THE ABOVE.

Revisions

Symbol	Descriptions	Date	Approved

Architect:	Engineer:	
ARCHITECTURAL ALLIANCE MINNEAPOLIS, MINNESOTA	MEAD & HUNT MADISON, WISCONSIN	U.S. ARMY ENGINEER DISTRICT CORPS OF ENGINEERS OMAHA, NEBRASKA

Designed by: SS
Drawn by: SS/JM
Checked by: PS
Reviewed by: EO
Submitted by:

MINNEAPOLIS–ST.PAUL AFR — MINNESOTA

CONSOLIDATED LODGING FACILITY
– PHASE THREE –

ENLARGED ELEVATOR PLANS, SECTIONS, & DETAILS

Plot Scale Ratio: 1: 1
Date: 2–14–2002
Design File: 9941A65
Spec. No.: DACA 45–02–B–0008
Drawing Code: AF 721–315–03
Contract No.: DACA xx–xx–x–xxxx
Sheet reference number: A6.5

QJKL-990011P3

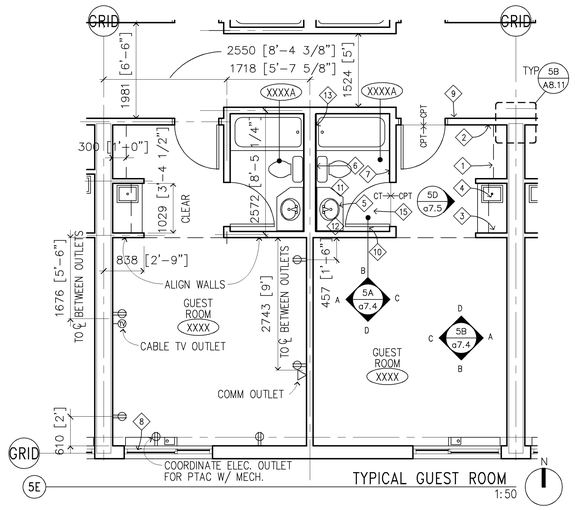

5E TYPICAL GUEST ROOM 1:50

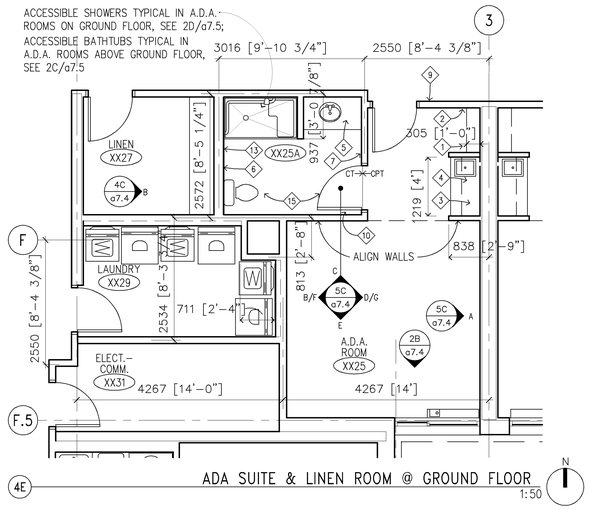

4E ADA SUITE & LINEN ROOM @ GROUND FLOOR 1:50

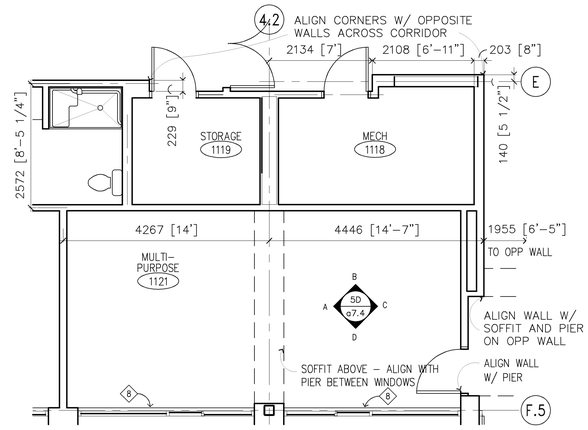

3E MULTI-PURPOSE ROOM 1:50

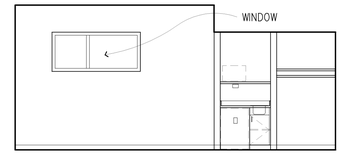

SEE 5B/A7.4 FOR TYPICAL NOTES

2D ø7.4 WEST GUEST ROOM 1147
EAST WING SIM. 1:50

A 2 EQUAL LENGTH SHELVES PER ROW

B 3 EQUAL LENGTH SHELVES PER

4C ø7.4 ELEVATIONS AT LINEN
1:50

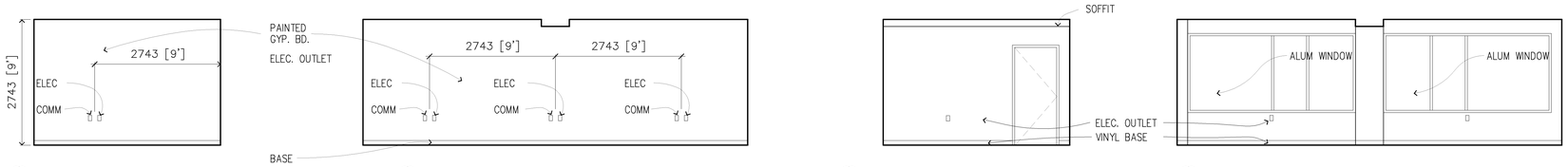

A WEST ELEVATION

B NORTH ELEVATION

C EAST ELEVATION

D SOUTH ELEVATION

5D ø7.4ø7.4 ELEVATIONS AT MULTI-PURPOSE 1121
1:50

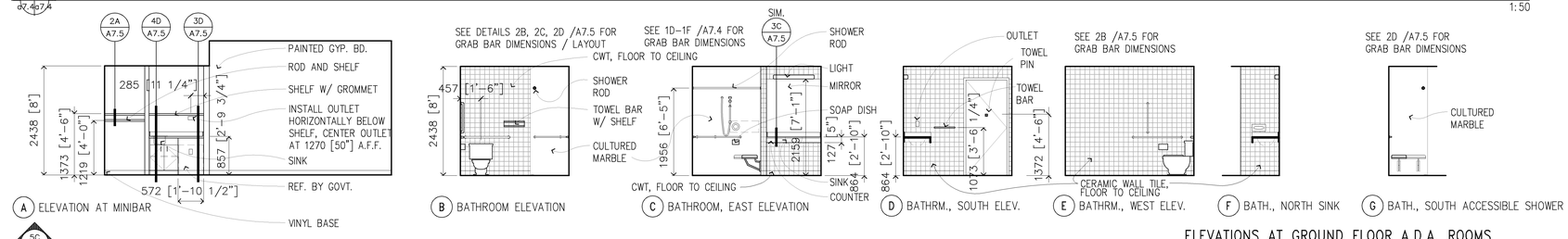

A ELEVATION AT MINIBAR

B BATHROOM ELEVATION

C BATHROOM, EAST ELEVATION

D BATHRM., SOUTH ELEV.

E BATHRM., WEST ELEV.

F BATH., NORTH SINK

G BATH., SOUTH ACCESSIBLE SHOWER

5C ø7.4ø7.4 ELEVATIONS AT GROUND FLOOR A.D.A. ROOMS
1:50

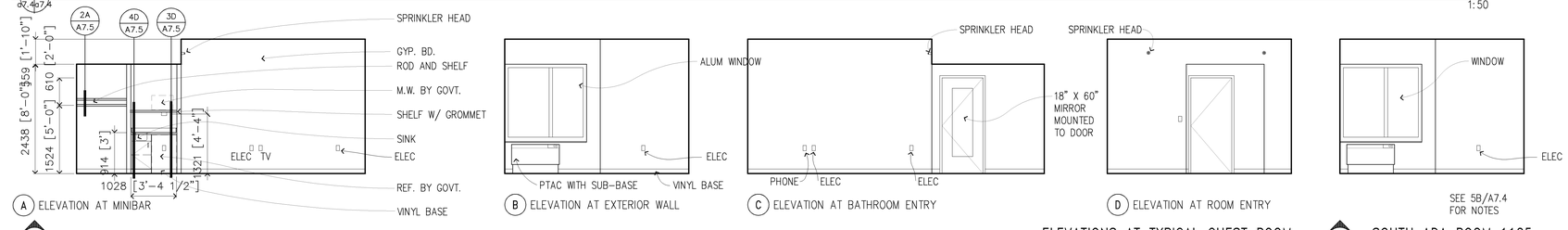

A ELEVATION AT MINIBAR

B ELEVATION AT EXTERIOR WALL

C ELEVATION AT BATHROOM ENTRY

D ELEVATION AT ROOM ENTRY

ELEVATIONS AT TYPICAL GUEST ROOM
1:50

2B ø7.4ø7.4 SOUTH ADA ROOM 1125
1:50

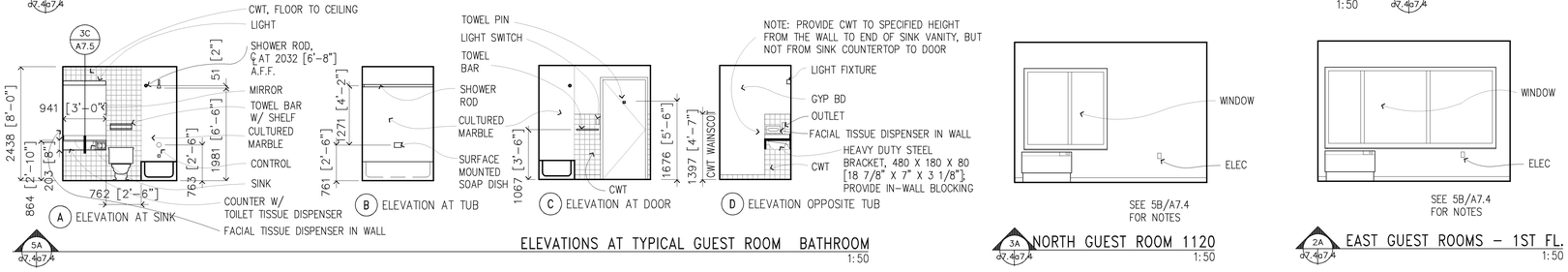

A ELEVATION AT SINK

B ELEVATION AT TUB

C ELEVATION AT DOOR

D ELEVATION OPPOSITE TUB

ELEVATIONS AT TYPICAL GUEST ROOM BATHROOM
1:50

3A ø7.4ø7.4 NORTH GUEST ROOM 1120
1:50

2A ø7.4ø7.4 EAST GUEST ROOMS - 1ST FL.
1:50

NOTES FOR ENLARGED ROOM PLANS

1. REFER TO SHEET 0.4 FOR TYPICAL MOUNTING HEIGHTS.

KEYNOTES FOR ENLARGED ROOM PLANS

1. METAL CLOSET ROD WITH HANGARS
2. WALL MOUNTED IRONING BOARD HOLDER (FF&E)
3. MINI BAR CASEWORK (WITH UNDERCOUNTER REFRIGERATOR AND MICROWAVE FURNISHED BY GOV'T)
4. S.S. BAR SINK
5. CULTURED MARBLE VANITY WITH DROP IN SINK AND 203 [8"] HIGH APRON BELOW WITH BUILT-IN RECESSED TOILET PAPER HOLDER (AT A.D.A. ROOMS, 127 [5"] HIGH APRON WITHOUT TOILET PAPER HOLDER)
6. 457 [18"] TOWEL SHELF WITH TOWEL BAR
7. 457 [18"] LONG TOWEL BAR
8. 25 [1"] METAL HORIZONTAL BLINDS
9. ROOM SIGNAGE
10. TOWEL PIN MOUNTED ON DOOR
11. TOILET PAPER HOLDER IN VANITY APRON
12. RECESSED FACIAL TISSUE DISPENSER
13. PROVIDE CEMENTIOUS BACKER BOARD IN LIEU OF TOP LAYER OF GYP. BD.
14. CASEWORK
15. PROVIDE MEMBRANE SIM TO "HYDROMENT ULTRA-SET" BELOW CERAMIC FLOOR TILE AT ALL GUEST BATHROOMS ON FLOORS 2, 3, AND 4.

I hereby certify this drawing was prepared by me or under my direct supervision and that I am a duly registered architect under the laws of the State of Minnesota.

For: Architectural Alliance
By:
Title: Principal
Registration No: 16854

2000 1000 0 2000 4000

SCALE: 1 : 50

ALL SCALES SHOWN ARE BASED ON A STANDARD DRAWING SIZE OF 28" X 40" OR METRIC DRAWING SIZE OF 841mm X 594mm. IF ANY OTHER SIZE DRAWINGS ARE FURNISHED OR PLOTTED THE CONTRACTOR SHALL ADJUST THE SCALES ACCORDINGLY. THE CONTRACTOR SHALL ALSO ADVISE HIS SUB-CONTRACTORS OF THE ABOVE.

Revisions			
Symbol	Descriptions	Date	Approved

Architect: ARCHITECTURAL ALLIANCE MINNEAPOLIS, MINNESOTA	Engineer: MEAD & HUNT MADISON, WISCONSIN	U.S. ARMY ENGINEER DISTRICT CORPS OF ENGINEERS OMAHA, NEBRASKA

Designed by: SS
Drawn by: SS/JM
Checked by: JM
Reviewed by: EO
Submitted by:

MINNEAPOLIS-ST.PAUL AFR — MINNESOTA

CONSOLIDATED LODGING FACILITY
- PHASE THREE -

ENLARGED ROOM PLANS and INTERIOR ELEVATIONS

Plot Scale Ratio: 1: 1
Design File: 9941A74
Date: 2-14-2002
Spec. No.: DACA 45-02-B-0008
Contract No.: DACA xx-xx-x-xxxx
Drawing Code: AF 721-315-03
Sheet reference number: A7.4

QJKL-990011P3

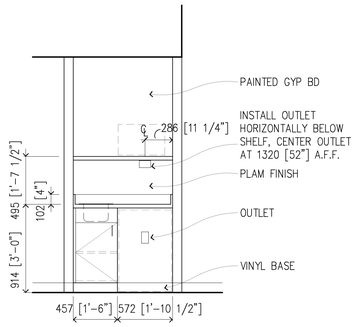

5D a7.4 a7.5 TYPICAL MINI-BAR CABINET 1:25

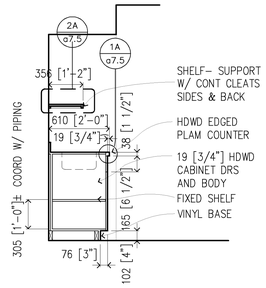

4D a7.4 a7.5 TYPICAL MINI-BAR CABINETS 1:25

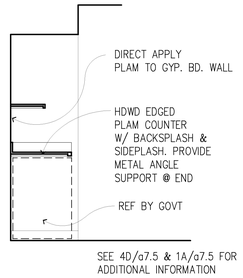

3D a7.4 a7.5 TYPICAL MINI-BAR COUNTER 1:25

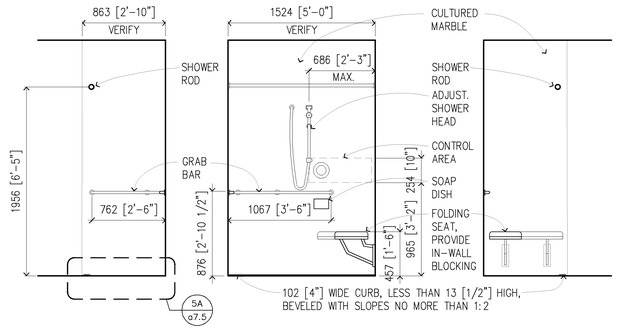

2D a7.4 a7.5 ACCESSIBLE SHOWER, TYP. AT PHASE TWO A.D.A. ROOMS ON GROUND FLOOR 1:25

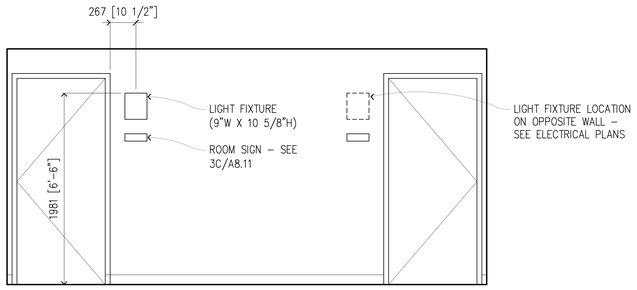

5C a7.4 a7.5 TYPICAL GUEST ROOM ENTRY ALCOVE IN CORRIDOR 1:25

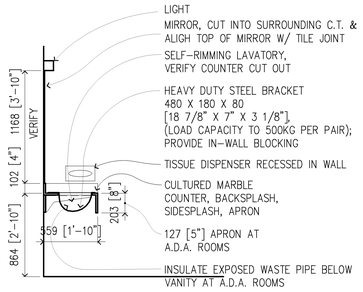

SEE TYPICAL BATH COUNTER PLAN DETAIL 3B/A7.5

3C a7.4 a7.5 TYPICAL BATH COUNTER 1:25

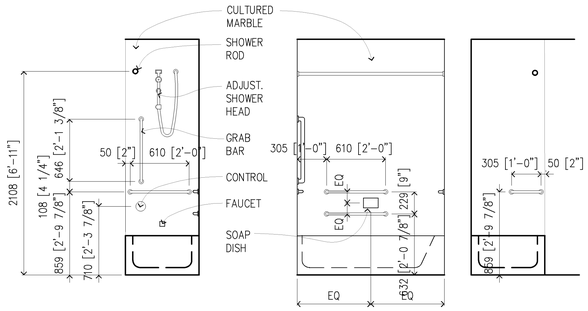

2C a7.4 a7.5 ACCESSIBLE BATHTUB, TYP. AT PHASE TWO A.D.A. ROOMS ABOVE GROUND FLOOR 1:25

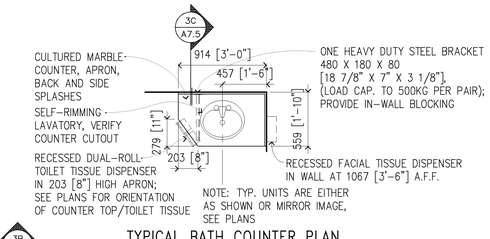

3B a7.4 a7.5 TYPICAL BATH COUNTER PLAN 1:25

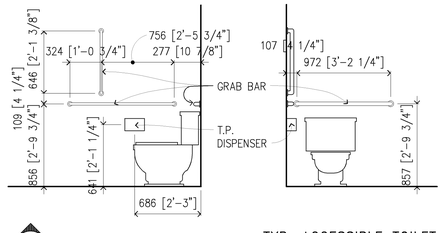

2B a7.4 a7.5 TYP. ACCESSIBLE TOILET 1:25

200 100 0 200 400

SCALE: 1 : 5

1000 500 0 1000 2000

SCALE: 1 : 25

I hereby certify this drawing was prepared by me or under my direct supervision and that I am a duly registered architect under the laws of the State of Minnesota.

For: Architectural Alliance
By:
Title: Principal
Registration No: 16854

ALL SCALES SHOWN ARE BASED ON A STANDARD DRAWING SIZE OF 28" X 40" OR METRIC DRAWING SIZE OF 841mm X 594mm. IF ANY OTHER SIZE DRAWINGS ARE FURNISHED OR PLOTTED THE CONTRACTOR SHALL ADJUST THE SCALES ACCORDINGLY. THE CONTRACTOR SHALL ALSO ADVISE HIS SUB-CONTRACTORS OF THE ABOVE.

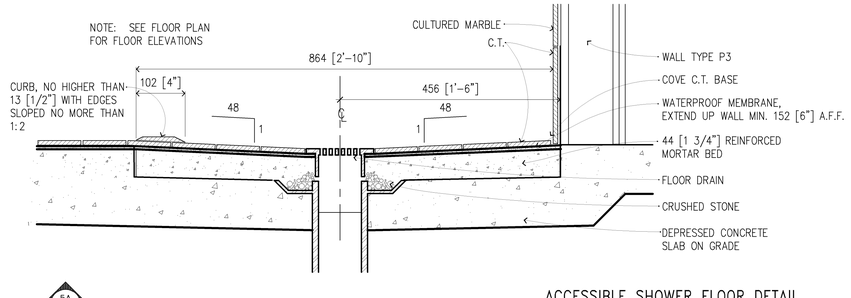

5A a7.4 a7.5 ACCESSIBLE SHOWER FLOOR DETAIL 1:5

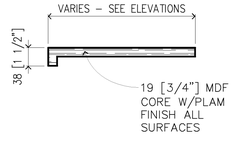

3A a7.4 a7.5 ADJUSTABLE SHELF 1:5

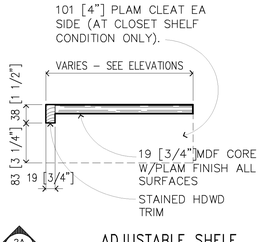

2A a7.4 a7.5 ADJUSTABLE SHELF 1:5

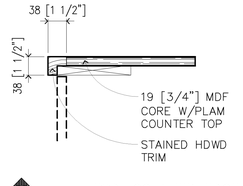

1A a7.5 a7.5 TYP. COUNTER EDGE 1:5

Revisions			
Symbol	Descriptions	Date	Approved

Architect: ARCHITECTURAL ALLIANCE MINNEAPOLIS, MINNESOTA

Engineer: MEAD & HUNT MADISON, WISCONSIN

U.S. ARMY ENGINEER DISTRICT CORPS OF ENGINEERS OMAHA, NEBRASKA

Designed by: **SS**
Drawn by: **SS/JM**
Checked by: **PS**
Reviewed by: **EO**
Submitted by:

MINNEAPOLIS–ST.PAUL AFR — MINNESOTA

CONSOLIDATED LODGING FACILITY – PHASE THREE –

INTERIOR ELEVATIONS, SECTIONS, and DETAILS

Plot Scale Ratio: 1: 1
Design File: **9941A75**
Date: 2–14–2002
Sheet reference number:
Spec. No.: DACA 45–02–B–0008
Contract No.: DACA xx–xx–x–xxxx
Drawing Code: AF 721–315–03
A7.5

QJKL-990011P3